494

ornl

OAK RIDGE NATIONAL LABORATORY

LOCKHEED MARTIN

ORNL/TM-13275/V

FMDP REACTOR ALTERNATIVE SUMMARY REPORT VOL. 3—PARTIALLY COMPLETE LW ALTERNATIVE

Reactor Alternative Team

Fissile Materials Disposition Program

DO NOT REMOVE FROM READING ROOM

PROPERTY OF U.S. GOVERNMENT

DOE

Box 65

Item 12

ERATED BY

ENERGY RESEARCH CORPORATION

ATES

ERGY

This report has been reproduced directly from the best available copy.

Available to DOE and DOE contractors from the Office of Scientific and Technical Information, P.O. Box 62, Oak Ridge, TN 37831; prices available from (423) 576-8401.

Available to the public from the National Technical Information Service, U.S. Department of Commerce, 5285 Port Royal Rd., Springfield, VA 22161.

This report was prepared as an account of work sponsored by an agency of the United States Government. Neither the United States Government nor any agency thereof, nor any of their employees, makes any warranty, express or implied, or assumes any legal liability or responsibility for the accuracy, completeness, or usefulness of any information, apparatus, product, or process disclosed, or represents that its use would not infringe privately owned rights. Reference herein to any specific commercial product, process, or service by trade name, trademark, manufacturer, or otherwise, does not necessarily constitute or imply its endorsement, recommendation, or favoring by the United States Government or any agency thereof. The views and opinions of authors expressed herein do not necessarily state or reflect those of the United States Government or any agency thereof.

ORNL/TM-13275/V3
Dist. Category UC-523

FMDP Reactor Alternative Summary Report
Vol. 3—Partially Complete LWR Alternative

Contributors

S. R. Greene
Reactor Alternative Team Leader
Oak Ridge National Laboratory

S. E. Fisher
Reports Coordinator
Oak Ridge National Laboratory

Oak Ridge National Laboratory

B. B. Bevard
S. L. Byerly
S. B. Ludwig
G. E. Michaels
J. W. Miller
D. L. Moses
D. G. O'Connor
R. T. Primm, III
R. L. Reid
D. J. Spellman
J. F. Thomas
K. A. Williams

Lawrence Livermore National Laboratory

G. S. Holman

Los Alamos National Laboratory

J. J. Buksa
T. L. Cremers
F. E. Motley

Sandia National Laboratories

C. D. Jaeger
R. M. Zurn

TRW, Inc.

P. Krishna
S. S. Sareen

Date Published: September 1996

Prepared by
OAK RIDGE NATIONAL LABORATORY
Oak Ridge, Tennessee 37831
managed by
LOCKHEED MARTIN ENERGY RESEARCH CORP.
for the
U.S. DEPARTMENT OF ENERGY
under contract DE-AC05-96OR22464

Contents

Page

List of Figures v
List of Tables vii
Acronyms and Abbreviations ix
1. Introduction 1-1
1.1 Weapons-Usable Plutonium Inventories—A Cold War Legacy 1-1
1.2 Recent Developments 1-1
1.3 The Danger Posed by Surplus Plutonium Inventories 1-1
1.4 DOE's Role in Plutonium Disposition 1-2
1.5 Purpose of This Report 1-3
1.6 References 1-4
2. Partially Complete LWR Alternative 2-1
2.1 Introduction 2-1
2.1.1 General Assumptions 2-1
2.1.2 Summary Description of PCLWR Disposition Facilities 2-2
2.1.3 Description of Facility Interfaces for the PCLWR Disposition Alternative 2-4
2.2 PuP Facility 2-4
2.2.1 PuP Facility Description 2-4
2.2.2 PuP Facility Design and Construction 2-5
2.2.3 PuP Facility Oversight and Permitting 2-6
2.2.4 PuP Facility Operations 2-9
2.2.5 PuP Facility D&D 2-13
2.2.6 PuP Facility Schedule Summary 2-13
2.2.7 PuP Facility Cost Summary 2-14
2.2.8 PuP Facility Technical Viability 2-14
2.2.9 PuP Facility S&S Summary 2-17
2.3 MOX Fuel Fabrication Facility 2-22
2.3.1 MOX Fuel Fabrication Facility Description 2-22
2.3.2 MOX Fuel Fabrication Facility Design and Construction 2-22
2.3.3 MOX Fuel Fabrication Facility Licensing and Permitting 2-24
2.3.4 MOX Fuel Fabrication Facility Operations 2-26
2.3.5 MOX Fuel Fabrication Facility D&D 2-31
2.3.6 MOX Fuel Fabrication Facility Schedule Summary 2-31
2.3.7 MOX Fuel Fabrication Facility Cost Summary 2-33
2.3.8 MOX Fuel Fabrication Facility S&S Summary 2.33
2.3.9 MOX Fuel Fabrication Facility Technical Viability 2-38
2.4 PCLWR Facility 2-39
2.4.1 PCLWR Facility Description 2-39
2.4.2 PCLWR Facility Design and Construction 2-40
2.4.3 PCLWR Facility Licensing and Permitting 2-44
2.4.4 PCLWR Facility Operations 2-48
2.4.5 PCLWR Facility Conversion to LEU and Private Ownership 2-56
2.4.6 PCLWR Facility Schedule Summary 2-56
2.4.7 PCLWR Facility Cost Summary 2-57
2.4.8 PCLWR Facility S&S Summary 2-57

Page

2.4.9 PCLWR Facility Technical Viability 2-8
2.5 HLW Repository 2-8
2.5.1 HLW Repository Description 2-8
2.5.2 HLW Repository Design and Construction 2-8
2.5.3 HLW Repository Licensing 2-8
2.5.4 HLW Repository Shipments and Storage 2-8
2.5.5 HLW Repository Schedule Summary 2-8
2.5.6 HLW Repository Cost Summary 2-8
2.5.7 HLW Repository Technical Viability 2-7
2.6 Reference 2-7
3. PCLWR Alternative Summary 3-1
3.1 PCLWR Alternative Schedule Summary 3-1
3.2 Alternative Cost Summary 3-3
3.2.1 Cost-Related Advantages of the PCLWR Alternative 3-6
3.2.2 Cost-Related Disadvantages of the PCLWR Alternative 3-9
3.2.3 Potential for Privatization 3-10
3.3 PCLWR Alternative S&S Summary 3-10
3.4 PCLWR Alternative Technical Viability Summary 3-10
3.5 PCLWR Alternative Transportation Summary 3-11
3.6 Other Benefits 3-11
3.6.1 Reduction of Plutonium Inventory by Reactor-Based Disposition Alternatives 3-11
3.6.2 Energy Production 3-12
3.6.3 Beneficial Use of Depleted Uranium 3-12
3.6.4 Influences on Russia and Other Countries 3-13
3.7 Reference 3-13
Appendix A. Summary Description of Plutonium Disposition Reactor Alternatives and Variants A-1
Appendix B. Schedule Analysis Approach B-1
Appendix C. Cost Analysis Approach C-1
Appendix D. Safeguards and Security Analysis Approach D-1
Appendix E. Quantitative Technical Viability Assessment E-1
Appendix F. Description of Plutonium Feed Materials F-1
Appendix G. Transportation and Packaging of Plutonium Material Forms G-1
Appendix H. Glossary H-1

w dia

am for the PuP faci
tion for the PuP fa
ple summary .....
X fuel fabrication facility p
abrication facility schedule sum

PWR fuel flow path .....
facility license and permit schedule .....
ayout for the fresh MOX fuel storage va
l storage vault layout .....
facility schedule summary .....
Process flow diagram fo

.....2-70

3.3 LCCs for
3.4 Constant
3.5 Simplifie
3.6 Depiction
3.1 Geograph
3.2 Unclassifi
3.1 Simplifie

Y 96 $M. Bottom: revenues in FY 96 $M .....
ative .....
segments for the FCLWR alternative .....
actor alternatives .....
surplus plutonium .....
.....1-3
segments for reactor alternatives .....

G.2
G.3
G.4
G.5
G.6
G.7
G.8
G.9

kage .....
pecification 6M package
.....
.....
.....
truck .....
.....
.....
.....

List of Tables

Table		Page
2.1	PCLWR alternative	2-1
2.2	PuP facility design and construction schedule	2-6
2.3	PuP facility design and construction cost	2-7
2.4	PuP facility oversight and permitting schedule	2-8
2.5	PuP facility preoperational costs (including oversight and permitting)	2-9
2.6	Parameters for feed materials transport leg	2-9
2.7	PuP facility operational schedule	2-12
2.8	PuP facility other LCCs	2-13
2.9	PuP facility schedule summary	2-14
2.10	Summary of PuP facility LCCs	2-16
2.11	Nonproliferation and S&S risk assessment for the PuP facility	2-18
2.12	DOE attractiveness categories and quantities from DOE Order 5633.3B	2-21
2.13	MOX fuel fabrication facility design and construction schedule	2-23
2.14	Design and construction costs for PCLWR MOX fuel fabrication facility in 24-category format	2-24
2.15	MOX fuel fabrication facility licensing and permitting schedule	2-25
2.16	Projected preoperational LCCs for the MOX fuel fabrication facility (including licensing and permitting costs)	2-26
2.17	Parameters for PuO_2 transport leg	2-26
2.18	MOX fuel fabrication facility batch process data	2-28
2.19	MOX fuel fabrication facility operational schedule	2-29
2.20	LCCs for PCLWR MOX fuel fabrication facility in 24-category format	2-30
2.21	MOX fuel fabrication facility schedule summary	2-31
2.22	LCCs for PCLWR MOX fuel fabrication facility in 24-category format	2-34
2.23	Nonproliferation and S&S risk assessment for the PCLWR MOX fuel fabrication facility	2-35
2.24	PCLWR facility design and construction schedule	2-43
2.25	Design and construction costs for a government-owned two-PCLWR facility	2-44
2.26	PCLWR facility licensing and permitting schedule summary	2-46
2.27	PCLWR facility assumptions	2-47
2.28	Licensing and other preoperational costs for a government-owned PCLWR facility	2-48
2.29	Parameters for fresh MOX fuel transport leg	2-48
2.30	Plutonium disposition capacity and rate for one reactor (ABB-CE System 80)	2-51
2.31	ABB-CE System 80 MOX fuel cycle characteristics	2-51
2.32	MOX charging/discharging schedule for partially complete reactors	2-52
2.33	PCLWR facility batch process data	2-53
2.34	PCLWR facility operations schedule	2-54
2.35	Recurring and other LCCs for a government-owned PCLWR facility	2-55
2.36	PCLWR facility schedule summary	2-57
2.37	Summary of LCCs for PCLWR facility	2-59
2.38	Nonproliferation and S&S risk assessment for the PCLWR facility	2-60
2.39	Parameters for spent MOX fuel transport leg	2-71
3.1	PCLWR alternative schedule summary	3-1
3.2	24-Category LCCs for PCLWR option 50SFP2: two PWRs with full MOX cores	3-4
3.3	Staffing level summary	3-6

3.4 Undiscounted LCC summary for PCLWR alternative in the TSR document (withot business-negotiable categories) 3-4
3.5 Discounted LCC summary for PCLWR alternative in the TSR document 3-4
3.6 Comparison of RASR and TSR LCCs for the PCLWR alternative 3-4
3.7 Potential risks for theft, diversion, and retrieval 3-5
3.8 Plutonium inventory reduction for reactor-based disposition alternatives 3-8
A.1 Plutonium disposition reactor alternatives A-1
A.2 Deployment approaches for LWRs A-2
A.3 Reactor variant discriminators A-2
A.4 Reactor alternatives and variants—50-MT cases A-3
A.5 Reactor alternatives and variants—33-MT hybrid cases A-4
A.6 Summary of throughput characteristics for plutonium disposition reactors A-5
A.7 Current and anticipated European MOX fuel fabrication capacity A-6
B.1 MOX fuel fabrication facility production schedule B-3
C.1 24-Category format for LCC estimates C-3
E.1 Regulatory assessment scale E-1
E.2 Technical viability scale E-1
E.3 Technical viability rankings for components of the PCLWR alternative (50SFP2) E-4
F.1 Plutonium inventories in excess of national security needs[a] by site and form F-1

1. Introduction

Significant quantities of weapons-usable fissile materials [primarily plutonium and highly enriched uranium (HEU)] have become surplus to national defense needs both in the United States and Russia. These stocks of fissile materials pose significant dangers to national and international security. The dangers exist not only in the potential proliferation of nuclear weapons but also in the potential for environmental, safety, and health (ES&H) consequences if surplus fissile materials are not properly managed.

1.1 Weapons-Usable Plutonium Inventories—A Cold War Legacy

The first and second Strategic Arms Reductions Treaties (START I and START II) call for deep reductions in the strategic nuclear forces of both the United States and the former Soviet Union. In addition, in the aftermath of the Cold War, both the United States and Russia have initiated unilateral steps to increase the pace of strategic disarmament. Under START I and II and subsequent unilateral initiatives, some 10,000 to 20,000 warheads in the United States (and a similar or greater number in the former Soviet Union) could possibly be declared "surplus" to national security needs. Thus, significant quantities of weapons-usable fissile materials have or will become surplus to national defense needs both in the United States and Russia.

1.2 Recent Developments

In September 1993, President Clinton issued the U.S. Nonproliferation and Export Control Policy[1] that commits the United States to undertake a comprehensive management approach to the growing accumulation of fissile materials from dismantled nuclear weapons. This policy directs that the United States will do the following:

- *Seek to eliminate, where possible, accumulation of stockpiles of highly enriched uranium or plutonium, and to ensure that where these materials already exist they are subject to the highest standards of safety, security, and international accountability.*
- *Initiate a comprehensive review of long-term options for plutonium disposition, taking into account technical, nonproliferation, environmental, budgetary, and economic considerations. Russia and other nations with relevant interests and experience will be invited to participate in the study.*

Further, in January 1994, President Clinton and Russia's President Yeltsin issued a *Joint Statement Between the United States and Russia on Nonproliferation of Weapons of Mass Destruction and Means of Their Delivery*. In accordance with these policies, the focus of the U.S. nonproliferation efforts is fivefold: to secure nuclear materials in the former Soviet Union; to assure safe, secure, long-term storage and disposition of surplus fissile materials; to establish transparent and irreversible nuclear reductions; to strengthen the nuclear nonproliferation regime; and to control nuclear exports.

To demonstrate the U.S. commitment to the five objectives articulated in the joint statement, President Clinton announced on March 1, 1995, that 200 metric tons (MT) of U.S. fissile materials (~38.2 MT of which is weapons-grade plutonium) had been declared surplus to the U.S. nuclear defense needs.[2] In addition, it is anticipated that several metric tons of reactor-grade material containing weapons-usable plutonium will be declared surplus in the future. Thus, it appears that ~50 MT of weapons-usable plutonium will become surplus to U.S. defense needs. Russia has designated ~50 MT of weapons-usable plutonium and 400 MT of HEU to be surplus to its national defense needs.

1.3 The Danger Posed by Surplus Plutonium Inventories

In its 1994 study, *Management and Disposition of Excess Weapons Plutonium*,[3] the National Academy of Sciences (NAS) stated, "*The existence of this surplus material constitutes a clear and present danger to national and international security.*" In many respects, the nuclear threat posed by this material is now more diffuse, harder to manage, and more dangerous than the nuclear tensions of the Cold War era. The international community is concerned about the adequacy of safeguards and security (S&S) of this material, the dangers associated with the potential proliferation of nuclear weapons, and the potential for ES&H consequences if surplus fissile materials are not properly

managed. In a joint communiqué from the Moscow Nuclear Safety Summit,[4] the leaders of the seven largest industrial countries and the Russian Federation endorsed the need to render surplus plutonium as proliferation-resistant as possible in Russia and the United States.

In June 1994, the Department of Energy (DOE) issued a Notice of Intent to prepare a "Programmatic Environmental Impact Statement (PEIS) for Long-Term Storage and Disposition of Weapons-Usable Fissile Materials," and to issue a Record of Decision (ROD) regarding long-term storage and disposition of weapons-usable fissile materials. The primary goal of disposition is to render weapons-usable fissile materials inaccessible and unattractive for weapons use while protecting human health and the environment. In its 1994 report, the NAS recommended that plutonium disposition strategies endeavor to attain the "spent fuel standard" (SFS). The NAS defined the SFS as follows:

> *We believe that options for the long-term disposition of weapons plutonium should seek to meet a "spent fuel standard"—that is, to make this plutonium roughly as inaccessible for weapons use as the much larger and growing quantity of plutonium that exists in spent fuel from commercial reactors.*[3]

> ***"...make the plutonium as unattractive and inaccessible for retrieval and weapons use as the residual plutonium in the spent fuel from commercial reactors."***

DOE has subsequently revised the SFS definition:

> *...make the plutonium as unattractive and inaccessible for retrieval and weapons use as the residual plutonium in the spent fuel from commercial reactors.*

The enhanced SFS makes explicit the concepts of material attractiveness and potential use in weapons, which were implicit in the NAS definition.

The SFS does not imply that conversion of the plutonium to spent nuclear fuel (SNF) is the *only* way to achieve the SFS, but rather that approaches should effect an equivalent level of proliferation resistance. Thus, achieving the SFS provides increased proliferation resistance by transforming surplus fissile materials into a less accessible form; it leads to decreased reliance on institutional barriers to protect the material from theft or diversion.

1.4 DOE's Role in Plutonium Disposition

Following President Clinton's September 1993 nonproliferation policy announcement, an Interagency Working Group (IWG) was established to conduct a comprehensive review of the options for disposition of surplus plutonium from nuclear weapons activities of the United States and the former Soviet Union. The IWG is cochaired by the White House Office of Science and Technology Policy and the National Security Council. In response to the President's nonproliferation policy, Secretary O'Leary created a department-wide project for control and disposition of surplus fissile materials on January 24, 1994. Later that year, this project became the DOE Office of Fissile Materials Disposition (DOE/MD). DOE has a lead role within the IWG for evaluating technical options and developing analyses of economic, schedule, environmental, and other aspects of potential disposition options.

Figure 1.1 is a simplified illustration of the overall fissile materials disposition decision process. The purpose of the process is to provide an orderly analysis of potential alternatives for plutonium disposition as input to the ROD. The detailed evaluation consists of a thorough assessment of the reasonable alternatives to be presented in the PEIS, along with a parallel, two-step process that includes technical, economic, and nonproliferation analyses. This will determine preferred alternatives and ultimately support the ROD.

The screening process, the first step in implementing the President's September 1993 nonproliferation policy, was completed in March 1995 with the publication of the DOE's *Summary Report of the Screening Process*. That report summarized the results of a study conducted to identify a spectrum of reasonable alternatives for long-term storage and disposition of surplus weapons-usable materials

Options

Figure 1.1. Fissile Materials Disp ion Progra DP) ROD process

. Thirty-five alternatives

ies necessary
ns-usable pluto
conversion of
in existing

cial spent nuclear reactor fuel.

commercial spent nuclear fuel via nucl

nplete
LWRs), and
s transported

DLW repositories). The B
subsequently dropped from

1.5 Purpose of This Requ

Following the screening process, DOE

analyses. One team wa
major disposition class
and reactors).

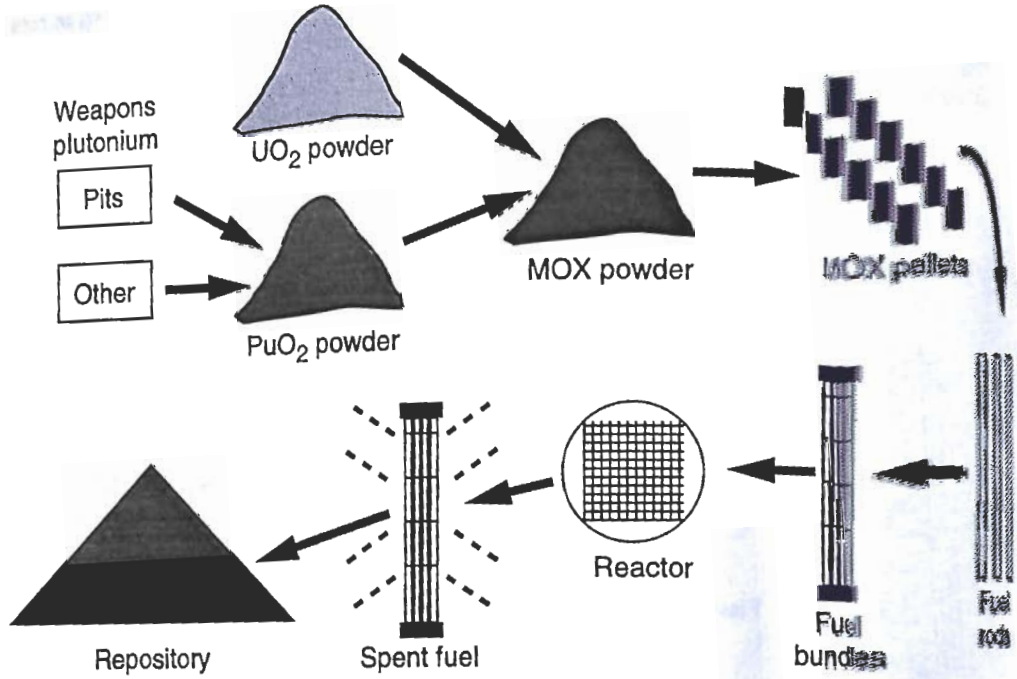

Figure 1.2. Generic reactor alternative

During the last year and a half, the Fissile Materials Disposition Program (FMDP) Reactor Alternative Team (RxAT) has conducted extensive analyses of the cost, schedule, technical maturity, S&S, and other characteristics of reactor-based plutonium disposition. This document (Vol. 3 of the four-volume report) summarizes the results of these analyses for the PCLWR-based plutonium disposition alternative. The results of the RxAT's analyses of the existing LWR, CANDU, and ELWR alternatives are documented in Vols. 1, 2, and 4 of this report, respectively. This multivolume Reactor Alternative Summary Report has been summarized in DOE's recently published FMDP technical summary report (TSR).[5]

Chapter 2 provides the results of all the analyses conducted to date for the plutonium processing (PuP) facility, MOX fuel fabrication facility, reactor facility, and repository. Licensing, construction, operations, and decontamination and decommissioning (D&D) are described for each facility. Schedule, cost, technical viability, S&S, and ES&H summaries are presented for each facility following the detailed discussions.

Chapter 3 provides a summary discussion of the entire alternative option. Schedule, cost, S&S, technical viability, transportation, and other benefits derived from using the reactor disposition alternative are presented.

Appendices are included to provide additional background and supporting information on the PCLWR alternative. Appendix A provides summary descriptions for all the reactor alternatives and variants. Appendix B presents the approach to developing the schedule information. Appendix C describes the approach to developing the cost information. Appendix D provides the approach for developing the safeguards and security information. Appendix E includes the quantitative technical viability assessment. Appendix F describes the feed materials. Appendix G presents transportation and packaging information. A glossary is provided in Appendix H.

1.6 References

1. Presidential Decision Directive-13, "U.S. Nonproliferation and Export Control Policy," September 27, 1993.
2. DOE Openness Initiative, February 6, 1996.
3. National Academy of Sciences, *Management and Disposition of Excess Weapons Plutonium*, National Academy Press, 1994.
4. Joint Declaration from Moscow Nuclear Safety Summit, April 20, 1996.
5. DOE, *Technical Summary Report for Surplus Weapons-Usable Plutonium Disposition*, July 17, 1996.

2. Partially Complete LWR Alternative

2.1 Introduction

The PCLWR alternative (Fig. 2.1), a representative case of the generic reactor alternative, uses two large commercial PCLWRs (whose construction is completed to support the mission) to irradiate the MOX fuel. At present, the Tennessee Valley Authority's Bellefonte-1 and -2 units appear to be the only viable partially complete option that would require licensing a single type of reactor. These reactors could be completed and used in the desired time frame to complete the disposition mission. Table 2.1 summarizes the variant that was analyzed for the PCLWR alternative.

The top-level flow diagram, Fig. 2.1, includes the four major facilities in this alternative: plutonium processing, MOX fuel fabrication facility, reactor facility [consisting of two completed PWRs and their balance-of-plant (BOP)], and spent fuel repository. The diagram shows the plutonium flow through the four major facilities.

2.1.1 General Assumptions

- The inventory of surplus plutonium is 50 MT.
- Alternatives were designed to address the entire inventory. This does not necessarily mean that all material will ultimately channel through the same set of operations, only that any alternatives have to provide a disposition path for all surplus material.
- Disposition of the plutonium will begin within ~10 years and be completed within ~25 years after the ROD. Authorization for initiation of the line item funding process coincides with the ROD.
- All necessary operations to implement a disposition alternative (e.g., design, construction,

Table 2.1. PCLWR alternative

Reactor type	Number	Ownership of reactor	Ownership of fuel fabrication facility	Collocation of PuP and fuel fabrication
ABB-CE System 80	2	Federal	Federal	No

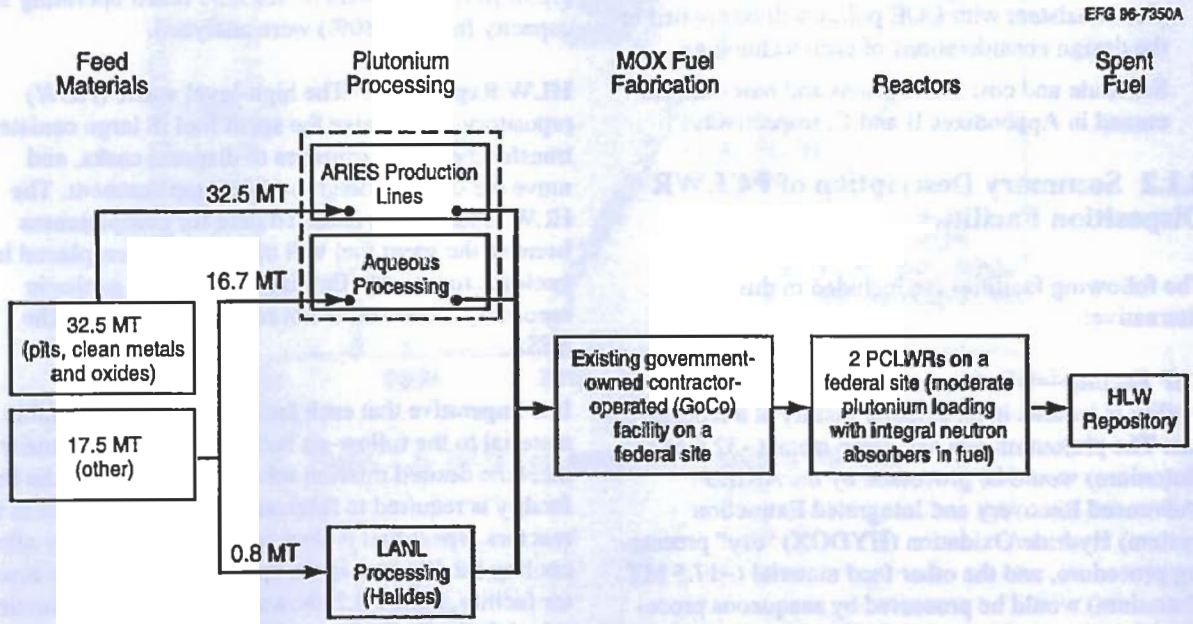

Figure 2.1. Top-level flow diagram for the PCLWR

sp

- Th
av
(1
ces
- We
pla
the
- Sch
cussed in

t assump
lixes B a

ses are dis-
tively.

2.1.2 Summ Disposition

Descri ities

CLWR

The following
alternative:

PuP Facility—It is assumed that the

e PuP
federal
2.5 MT
S
ion
' process-
(~17.5 MT
would be processed by aqueous procedure. It is assumed that most of the gallium (Ga) will

wi
ity
co
Bo
80
get
for
[12
cap

tory. Emp
ever is n

quired to a

edule for the reactors. Fig

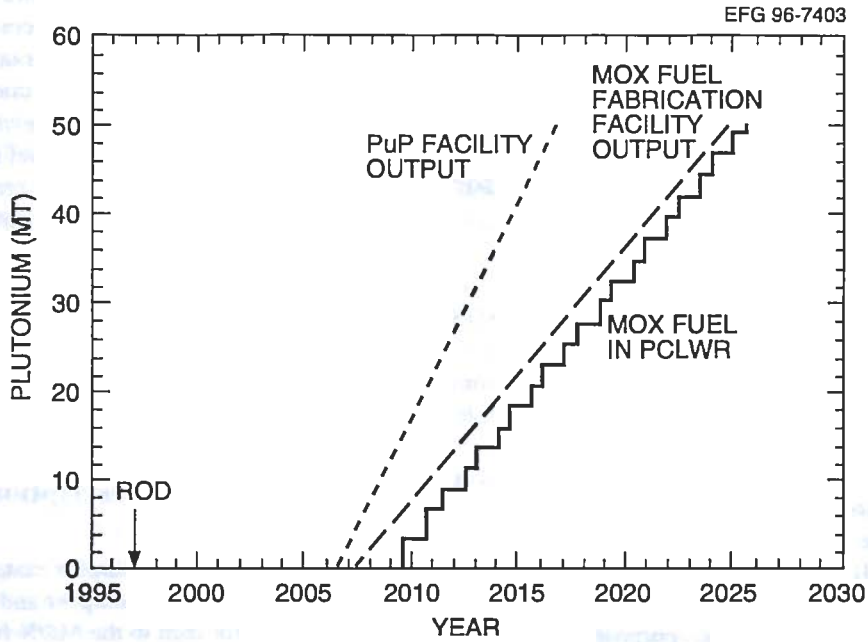

Figure 2.2. Plutonium processing schedule

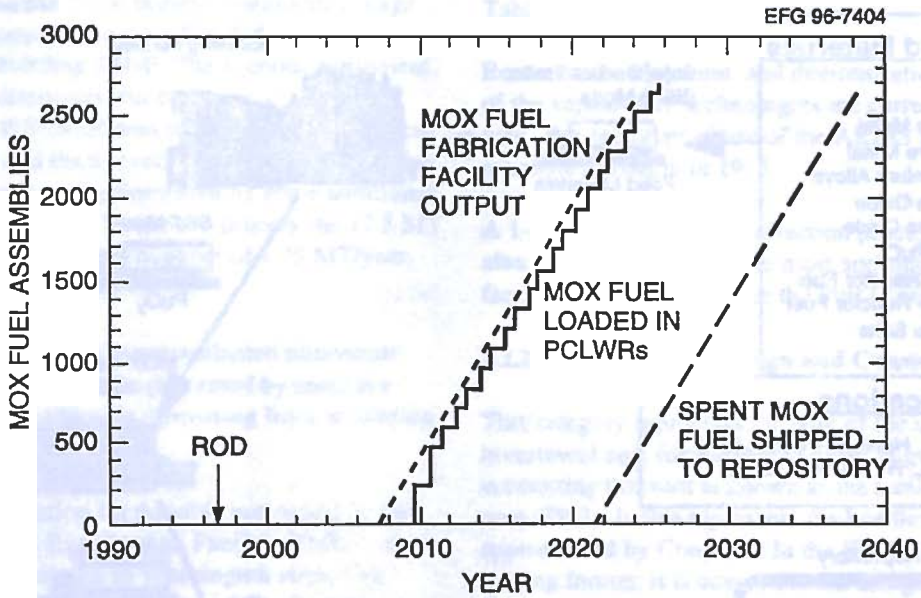

Figure 2.3. MOX fuel assembly processing schedule

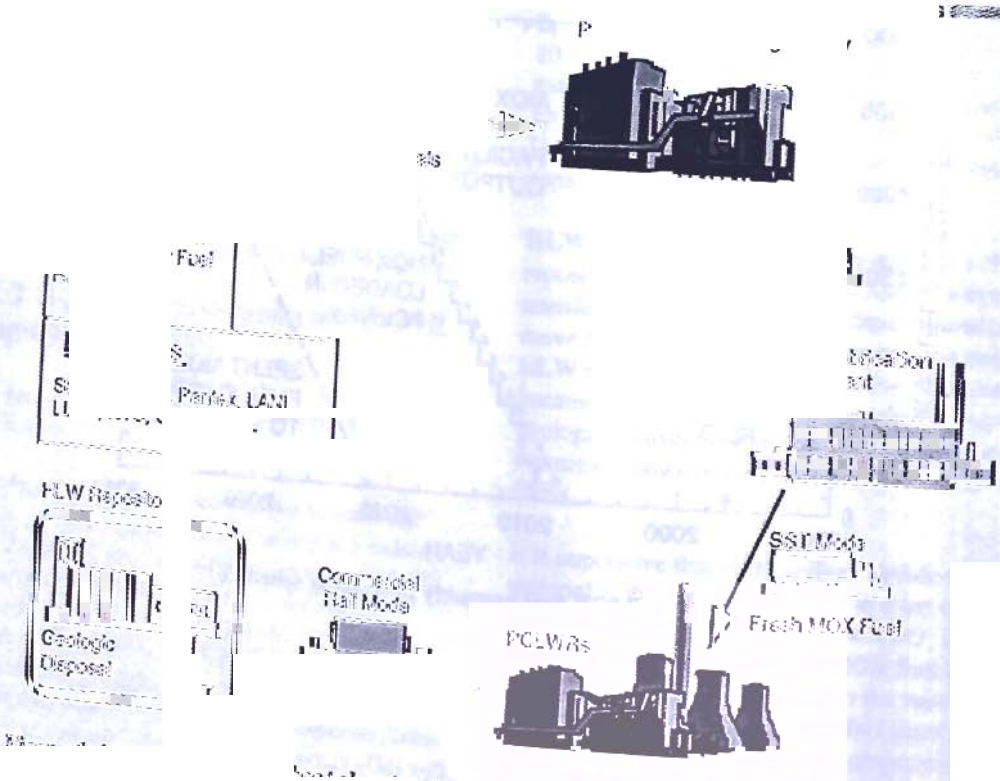

g the sportation segments for the PCLWR alter

ived, an

i-
on

e PuP facility

initial

line

date is Bu
ion area.
s been ide

ment i
that the

ion (RD&D)
ently under
process is

ional
5 MT
nium (throughput of 1.75 ... ar
for 10 years).

A 1-
afte
facil

ss will begin
riate existing
ity.

traction Cost

or
nt
ed
ng

se would be the
lity (F
on stat
much

neer
cost

2.2.3.2.

ible. Additional
for the PuP

The
base
The

cost of the PuP facili

3/2000
1/2002
1/2006
1/2002
1/2006

...ity Oversight and Permitting

The licensing approach fo...

The 1996-co...
for the PoP f...
cost for engi...
o be $17M. ...

...in the United States:

...struction necessary
estimated to be $32...
and construction, plus allow...

...design
...ion
...lowance

included. A risk...
account for the ...

...oded to
...estimate.
...esign and construction
...ing contingency, is $171M.

...activities;

...tional agr... and
...osition of ...ive
...n th... t; and
...add ... to the US ...

Table 2.3. PuP facility design and construction cost

Category	Cost category description	PuP at SRS [lump sum (1996 $M)]
	Capital or TEC front-end costs:	
7	Title I, II, III engineering, design, and inspection	17
8a	Capital equipment	34
8b	Direct and indirect construction/modification	32
9	Construction management	4
10	Initial spares (technology dependent)	3
11	AFI	25
12	Risk contingency (SRS estimate)	56
	TOTAL (TEC)	171

legacy of past nuclear-weapons production and from appropriate management of the ES&H aspects of past and future nuclear-energy generation."[1]

For those operations and processes conducted in existing or converted facilities owned by DOE as planned for the PuP facility, the regulation of nuclear activities and the protection of ES&H will be conducted under DOE regulations, safety guides, technical standards, directives, and compliance agreements with the oversight of the DNFSB, the Environmental Protection Agency (EPA) where applicable, and the state within which the facility is located. For such unlicensed DOE-owned facilities, the facility will be held to a standard of nuclear safety and quality equivalent to that of a facility licensed by the NRC. The mechanism for doing this is implemented through the regulations issued under the *Price-Anderson Amendments Act of 1988* and the *Atomic Energy Act of 1954*, as amended. All permitting requirements from applicable federal statutes will apply.

National Environmental Policy Act (NEPA)—The conversion and utilization of DOE-owned facilities for the plutonium disposition mission may require additional specific NEPA actions (under 10 CFR Part 1021.400) beyond that of the PEIS.

Atomic Energy Act of 1954, as amended—Unlicensed DOE-owned facilities will be operated by qualified, responsible DOE contractors subject to the indemnification requirements of the *Price-Anderson Amendments Act of 1988* and therefore subject to the nuclear safety regulations issued under and the enforcement provisions of Sect. 234A of the *Atomic Energy Act of 1954*, as amended.

Applicable regulations include the DOE rules for nuclear safety and radiation protection as given in 10 CFR Parts 820, 830, 834 (draft), and 835 and for classifying certain DOE-owned nuclear materials as given in 10 CFR Part 962.

Comparability to licensed facilities will be achieved by enforcing contractually mandated compliance with appropriate safety guides and technical standards implementing the DOE regulations. These DOE technical standards are periodically reviewed and updated to be comparable to current NRC licensing requirements. Key technical standards currently applicable to plutonium operations in DOE nonreactor nuclear facilities include the following:

- DOE-STD-101-92, *Compilation of Nuclear Safety Criteria for Potential Application to DOE Nonreactor Nuclear Facilities*, March 1992;
- DOE-STD-3009-94, *Preparation Guide for U.S. DOE Nonreactor Nuclear Facility Safety Analysis Reports*, July 1994; and
- DOE-STD-3013-94, *Criteria For Safe Storage of Plutonium Metals and Oxides*, December 1994.

These DOE standards implement requirements for handling, processing and storage of special nuclear materials (SNMs) consistent with or analogous to pertinent portions of 10 CFR Parts 70, 71, 73, and 74. These DOE standards also incorporate, by reference,

edule is sh
.2.6.

Funded F

cost (LCC)
ting forms
is categori
or operatio
tion of the
up-front co
her than co
ers. Recau
owned and t

of the preco
startup activities
or prior to full-
l after constructio
ersight and pe-
cost centers.

st for oversight,
sts are consist
ing facility
ssed in
ce summarized

ted.

Schedule

oversigh
tion proc s and will require 5 years. NEPA proc-
ess and c er site-specific

after the sit

$4
co
to l
sm
The

conti
of the
oversi

Table 2.4. PuP facility

Task ID	Task name	Duration (months)	Start	Fi
1.	Oversight and Permitting	60	12/1996	12
2.	DNFSB Review of Existing DOE Facility	60	12/1996	12
3.	NEPA/DOE	36		

Table 2.5. PuP facility preoperational costs (including oversight and permitting)

Category	Cost category description	Lump sum (1996 $M)
	Preoperational or OPC up-front costs:	
1	R&D	81
2	NEPA, oversight, permitting	6
3	Conceptual design	3
4	Quality assurance (QA), site qualification, and S&S plans	0
5	Postconstruction start-up	50
6	Risk contingency	11
	SUBTOTAL OPC	151

cost). The total 1996 constant dollar preoperational cost, including contingency, is $151M, as indicated in Table 2.5.

2.2.4 PuP Facility Operations

2.2.4.1 PuP Facility Shipment and Storage

The surplus plutonium feed materials will be packaged and transported from their present locations to the PuP facility where they will be converted to PuO_2. Once in oxide form the material will be repackaged and stored in vaults until it is needed by the MOX fuel fabrication facility. The PuP facility is planned to operate over a shorter period (generally 10 years), while the MOX fuel fabrication facility is planned to manufacture fuel over a period that coincides with the PCLWR reactor fueling requirements. The required lead/lag storage vaults will be constructed at both the PuP facility and the MOX fuel fabrication facility.

Excess weapons-usable materials located at various DOE facilities include pits, clean metal, impure metal, plutonium alloys, clean oxide, impure oxide, UO_2/PuO_2, alloy reactor fuel, oxide reactor fuel, and halide salts and oxides. Due to the variety of materials involved, no single Type B package design is appropriate. Therefore, DOE will utilize a number of different package designs for the packaging and transport of the feed materials to the plutonium processing facility. Shipment will be by safe, secure trailer (SST). Each SST will transport between 20 and 24 packages with approximately three SSTs per convoy.

Shipment Information—Based on the schedule assumptions, the ~50 MT of surplus plutonium will be shipped from its present locations to the PuP facility over a 10-year campaign. Table 2.6 summarizes estimates of the number of packages and shipments required for this shipment leg.

2.2.4.2 PuP Facility Operations Process

The PuP facility process diagrams are shown in Figs. 2.5 and 2.6. The facility has five major processing and handling sections: receiving, pit processing, mixed feed processing, gallium removal, and shipping.

Receiving—In the receiving area, pits and mixed plutonium feed stocks will be received by truck. In addition to plutonium pits in their shipping containers, other plutonium forms will be received in a variety of certified transport packages. Shipping containers aboard SSTs will be unloaded by forklifts onto a secured dock. The shipping containers will be inspected, checked for contamination, and unpacked. Storage vaults will be required for empty shipping containers and primary pit storage containers. In-line

Table 2.6. Parameters for feed materials transport leg

Maximum plutonium material/package (kg)	Quantity of plutonium/campaign (kg)	Estimated packages to be shipped	Number of SST shipments/campaign
4.5	50,000	31,000	1,100

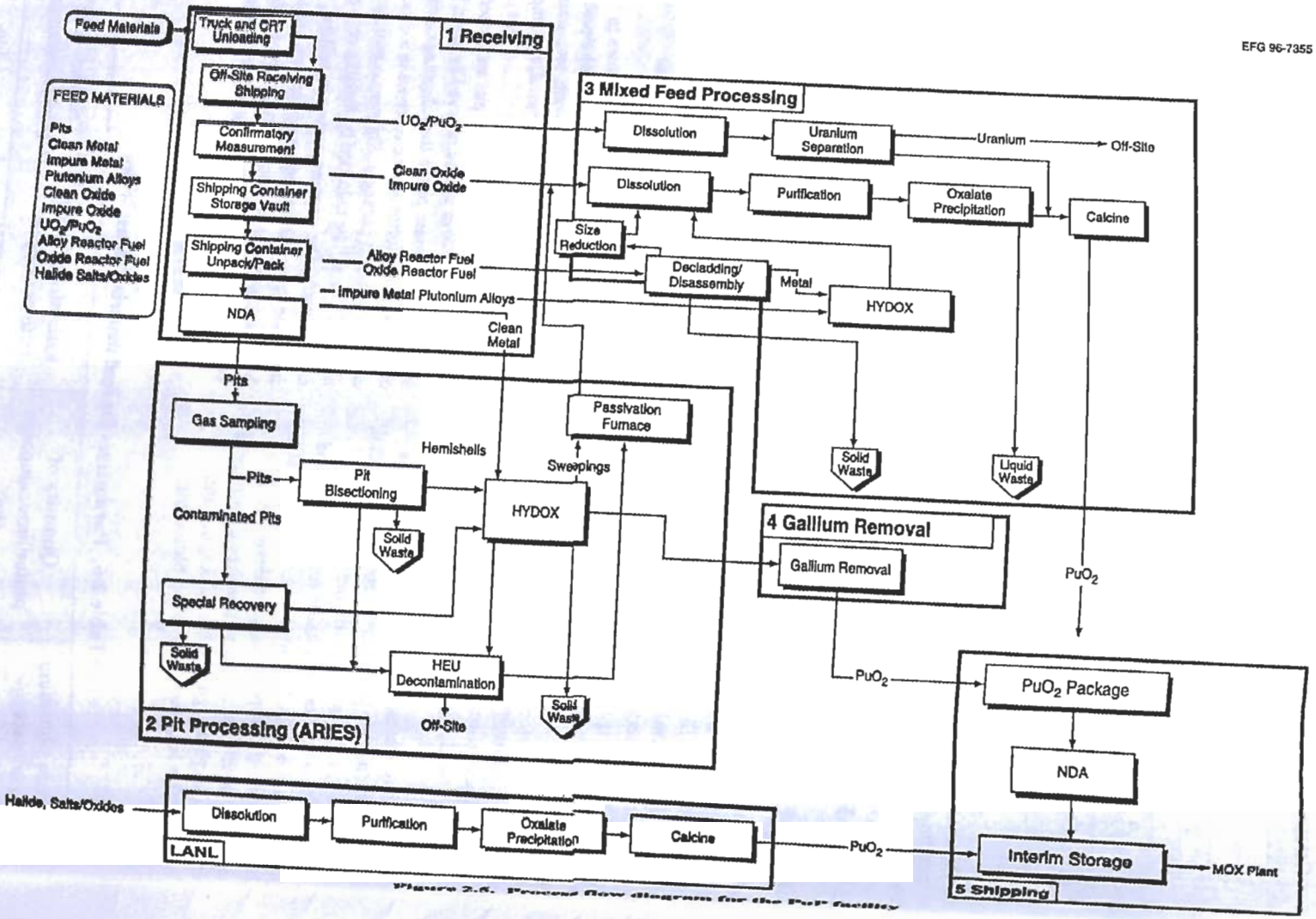

Figure 2-5. Process flow diagram for the Pit facility

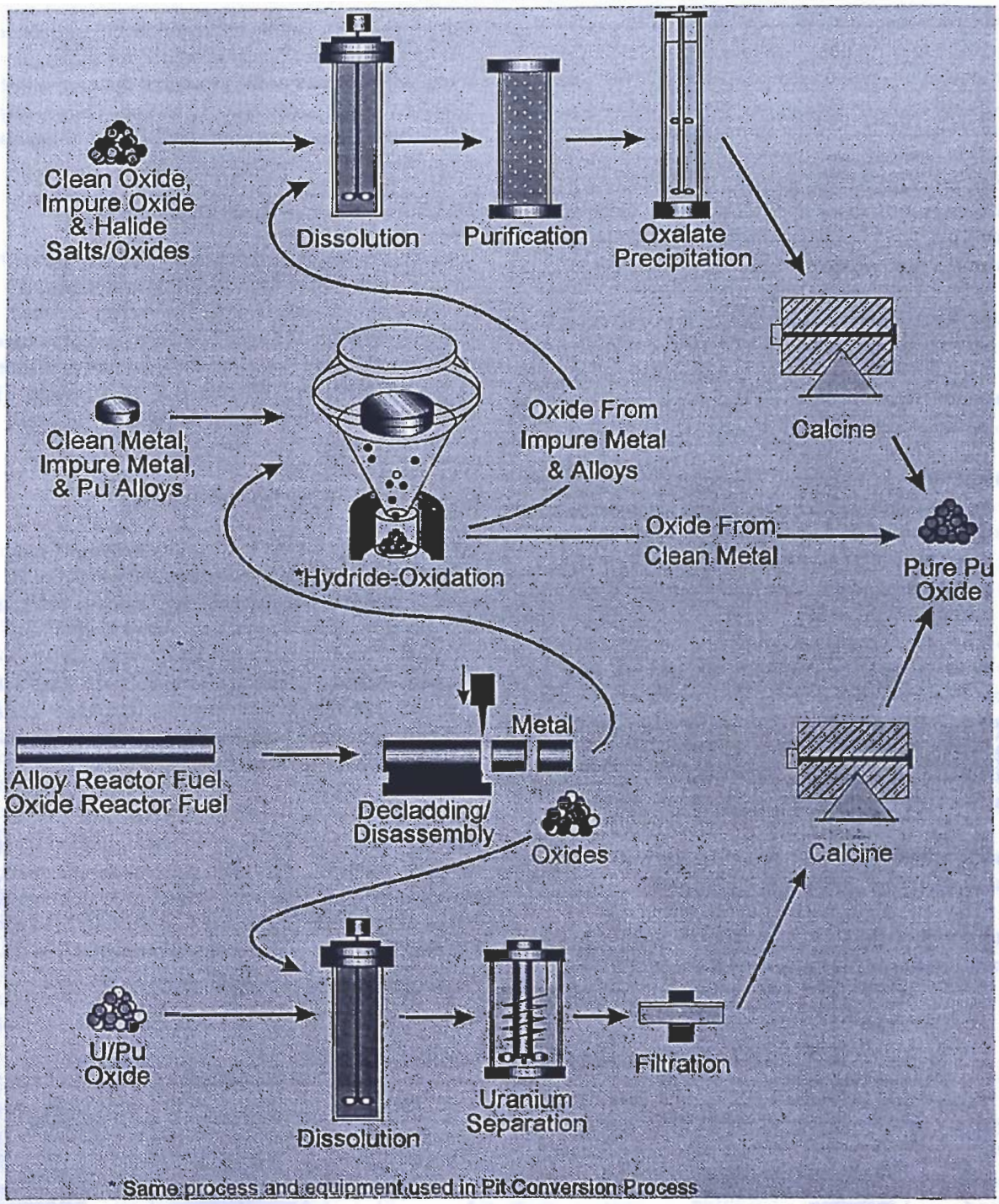

Figure 2.6. Process flow depiction for the PuP facility. Note: This figure is not meant to convey the actual process flow of the PuP facility, only to show the kinds of process steps that will be used.

pack

.7 and as a

entering the aqueous processing line.

Ha ... ides will be converted to PuO_2 using an ... ing costs, an
exi ... us processing line at LANL. ... nual costs,
... 996 constant
... ated to be
... fraction of gallium ... DM/year is
... mal treatment ... ll-time

Table 2.7. PuP facility operational schedule

Task name	Duration (months)	Start	Fi
...operational Phase	12	8/2005	7/
...peration	120	7/2006	7/
Approval to Commence Operation (KD-4)			7/
PuP Duration	100		7/
First PuO ...			9/2

Table 2.8. PuP facility other LCCs

Category	Cost category description	PuP at SRS	
		Lump sum (1996 $M)	Annual (1996 $M/year)
	Years of operation = 10 years		
	Other LCCs:		
13	O&M staffing	785	78.5
14	Consumables including utilities (included in category 13)	0	0
15	Major capital replacements or upgrades (included in category 13)	0	0
16	Waste handling and disposal	66	6.6
17	Oversight	10	1.0
18	M&O contractor fees (2% of categories 13–16)	17	1.7
19	PILT to local communities (1% of categories 13–16)	9	0.9
20	D&D (% of capital or $ estimate)	169	Nonrecurring
23	Transportation of plutonium forms to facility	35	3.5
24	Storage of plutonium at existing 94-1 site facility	Not in scope	
	PuP at LANL (halide processing)	1	0.1
	TOTAL OTHER LCCs	1092	92.3

equivalent (FTE) loaded salary of $77,900/year, a total staff count of 899 FTEs results. This value was based on a required direct staff of 344, which includes 156 operators, 55 radiological control officers, 12 systems engineers, 35 system maintenance workers, and 86 analytical laboratory support personnel. The annual operating cost includes allowances for indirect staff, site general and administrative (G&A) staff, and security personnel, of which there are estimated to be 555 FTEs (in addition to the 344 direct FTEs).

The $78.5M/year also includes consumables and capital replacements, which total $8.5M/year. A value of $6.6M/year was estimated for waste handling and disposal, and $1M/year was included for oversight charges. Of the sum of the above costs, 2% was allowed for management and operating (M&O) contractor fees ($1.7M/year), and 1% ($0.9M/year) was allotted for payments-in-lieu-of-taxes (PILT) to the local communities. Decommissioning costs are also included under other LCCs and are discussed in Sect. 2.2.5.2. A value of $169M is estimated for this activity. A value of $35M was estimated for transporting the plutonium feedstock from the various storage locations to the SRS over the 10-year operating period. In addition, about $1M over the 10-year period is estimated for processing 800 kg of halide-contaminated plutonium at LANL. As shown in Table 2.8, the total other LCC estimate for the 10-year PuP campaign is $1092M.

2.2.5 PuP Facility D&D

The PuP facility will be modified for the sole purpose of dispositioning surplus plutonium identified by this program. At the completion of this mission the PuP facility will be promptly decontaminated and decommissioned.

2.2.5.1 PuP Facility D&D Schedule

D&D is projected to take 2 years for removal of contaminated equipment and return of the building to habitable condition.

2.2.5.2 PuP Facility D&D Cost

The cost for decommissioning the PuP facility is included in Sect. 2.2.4.4. and estimated to be $169M.

2.2.6 PuP Facility Schedule Summary

The overall PuP facility implementation schedule is summarized in Table 2.9 and is shown in Fig. 2.7. This facility schedule is also included in the discussion of the overall alternative schedule in Chap. 3. This

Table 2.9. PuP facility schedule summary

Task ID	Task name	Duration (months)	Start	Finish
1.	R&D Funding Available			10/1995
2.	FMDP ROD			12/1996
3.	Congressional Funding Approval	36	12/1996	12/1999
4.	Research, Development, and Demonstrations	36	10/1995	9/1998
5.	Site and Facility Selection	12	12/1996	12/1997
6.	Oversight and Permitting	60	12/1996	12/2001
7.	Design Process	61	12/1996	1/2002
8.	Facility Modification	48	1/2002	1/2006
9.	Preoperational Phase	12	8/2005	7/2006
10.	Operation	120	7/2006	7/2016
11.	D&D	24	8/2016	7/2018

schedule does not include any contingency for schedule slip due to site selection difficulties, redesign, construction delays, or delay in the approval of line item funding.

The critical path through the development of this facility is through the design and construction process. If any of these tasks slip in their schedule, the rest of the implementation process will also be delayed. This critical path is shown in Fig. 2.7. If the start of operations at the PuP facility slips more than 3 months, the start of operations at the MOX fuel fabrication facility will also slip because the PuO_2 will not be available to begin fuel fabrication.

2.2.7 PuP Facility Cost Summary

Table 2.10 shows a summary of the PuP facility LCCs in the 24-category format. All anticipated plutonium-related costs from FY 1997 forward are included in this table.

2.2.8 PuP Facility Technical Viability

Five factors were evaluated to develop a qualitative assessment of the technical viability of a concept: a definition of the technological maturity of a process; the specification of the technical unknowns for the process and the technical risk associated with the application of the process; the R&D needs of the process; the condition, capacity, and reliability of infrastructure; and the regulatory and licensing requirements. Each of these items, except infrastructure, are addressed in the following sections.

Technological Maturity—Judging the maturity of the technologies employed in plutonium disposition facilities requires an assessment of the current level of development of each fuel cycle stage. Technologies can be categorized as being at the conceptual design stage, the laboratory or bench-scale testing stage (demonstrating scientific feasibility), the prototype stage (demonstrating engineering feasibility), or the industrialization/commercialization stage. Even if a significant domestic development base does not exist, a foreign experience base may be available.

All of the technology needed for pit disassembly and plutonium conversion exists at the laboratory and bench-scale testing stage and has been implemented to a limited degree. Ongoing R&D is moving the technologies to the prototype stage.

Technical Risks—Certain technologies have associated technical unknowns. Consequently, risks are associated with the application of the technologies based on these parameters.

Technical risks of the PuP facility are thought to be minimal. All processes have been demonstrated in existing facilities. The principal technical risk is the degree of reliability of these processes when applied at the level needed to achieve disposition goals. Throughput must be assessed; if found to be

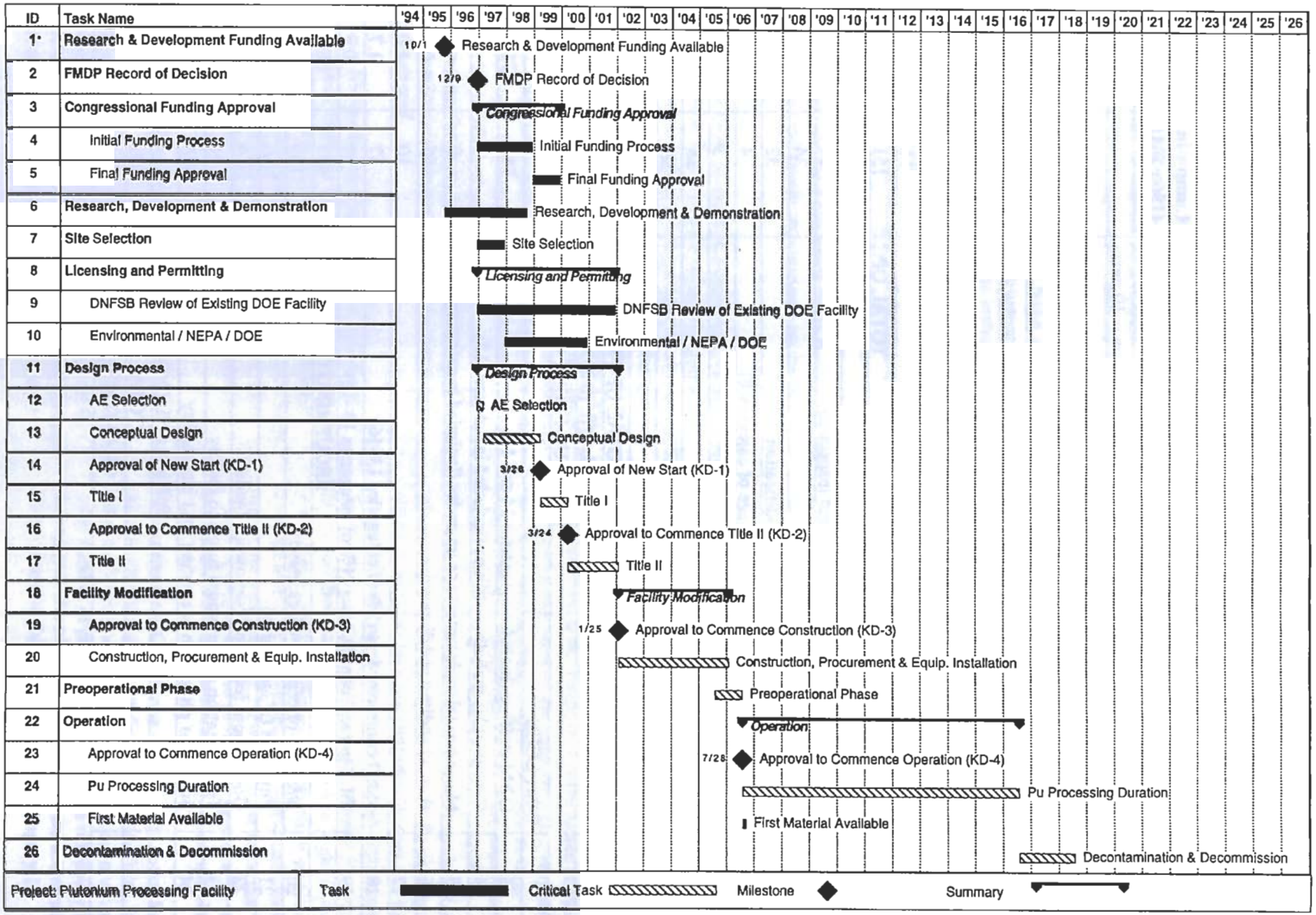

Figure 2.7. PuP facility schedule summary

11					
12					
13					75.5
14					
15					
16				65	
17				10	
18				17	
19				9	
				887	
21				169	
22				N/A	

ments on the facility

ile contains a variety of pit
re relatively simple in
more complicated and diffi-
ively simple, inexpensive
or use with
ested and
isassembly
s more effi-
erator radia-
must be gen-
ts. Processes
signs are cur-
sted and

facil
co
pr
no
wi
ris
ne
and operat

the facility.

on, Theft, or Proliferation Risks—
most of the material is in a very attrac
inimal intrinsic barriers. A large

monstrated.

onpit conversion processes

sed opportunity for possi-
. In the
greatest
d oxides
erials

ium-rich fo

? Facility

Environmental Conditio

DOE and its pred
managed S&S of
maintains an impe
measures to ensur

Table 2.11. Nonproliferation and S&S risk assessment for the PuP facility

Environment								
Facility	**Activity**	**Duration (h)**	**Throughput**	**Waste streams**	**Maximum inventory**	**Intrasite transport**	**Number of processing steps**	**Barriers**
PuP			5 MT plutonium	Yes <0.1 g/L plutonium	0.5 MT plutonium	No	16	MAA
	Receiving, NDA, and unpacking	8	4.5 kg plutonium per batch (criticality limit)			No, SST unload	0	
	Pit processing	8				No	3	Glovebox
	Mixed feed processing	8	4.5 kg plutonium per batch			No	11	Glovebox
	Gallium removal	8	4.5 kg plutonium per batch			No	2	Glovebox
	Shipping, NDA, and unpacking	8	4.5 kg plutonium per batch			No, SST load	0	
Transport	PuP to MOX fuel fabrication facility							

Note: MAA—material access area.

Table 2.11. Nonproliferation and S&S risk assessment for the PuP facility (cont.)

Material form										
Facility	**Activity**	**SNM input**	**SNM output**	**Plutonium quantity**	**Concentration of plutonium**	**SNM* category**	**Item mass/ dimensions**	**Radiation barrier**	**Chemical composition**	**Isotopics**
PuP				Other fissile material present	Other fissile material	DUU				
	Receiving, NDA, and unpacking	Metal, oxide	Metal, oxide	4.5 kg per batch (criticality limit)	>0.9 g/g (<0.1 g/g) (other fissile material)	IB-IID		No	Pure metal, oxides, miscellaneous	
	Pit processing	Metal	Metal			IB		No	Metal	
	Mixed feed processing	Metal, oxide, fuels, miscella-neous	Oxide	4.5 kg (per batch)		IC		No	Oxide, miscellaneous	
	Gallium removal	Oxide	Oxide	4.5 kg (per batch)		IC		No	Oxide	Mixed plutonium isotopes
	Shipping, NDA, and unpacking	Metal, oxide	Metal, oxide	4.5 kg (per batch)		IC		No	Oxide	
Transport	PuP to MOX fuel fabrica-tion facility									

Note: DUU—direct-use unirradiated.
*See Table 2.12.

Table 2.11. Nonproliferation and S&S risk assessment for the PuP facility (cont.)

S&S								
Facility	Activity	Number of MBAs	Accounting system type	Nuclear measure methods	Classified material	Physically accessible	Access	Special handling equipment
PuP		1–3	30% Item	Calorimetry, gamma, segmented gamma, neutron			Both	No
	Receiving, NDA, and unpacking		Both	0.8% (domestic) 1.5% (international)	Yes	Yes No (pits, TIDs)		
	Pit processing		Item		Yes	Yes		
	Mixed feed processing		Bulk		Yes/No	Yes		
	Gallium removal		Bulk		No	Yes		
	Shipping, NDA, and unpacking		Bulk		No	Yes No (TIDs)		
Transport	PuP to MOX fuel fabrication facility							

Note: TID—tamper-indicating device.

ew
uP
ity
cat-
y.

of p
dive
met
rela
this
inte
pro
ope
decade
are ava
materi

aterial in
e under
ata could be
identical
several
cilities, and standard S&S measures
osed by
cess environments.

egories and qu

OE Order 5633.3B

	Attractiveness level	I	III	IV[a]
Weapons	A	All quantities	N/A	N/A
Pure products	B	≥2		<0.2
		≥6		<0.4
		N/A	≥3 < 16	<3
A		N/A	N/A	Reportable quantities

[a]T

le limits in th

Assurance of Detection of Retrieval and Extraction—Because the PuP facility will involve large quantities of bulk material and very high throughputs, it may be very difficult to detect (using material accountability alone) the diversion of a significant quantity of material. The presence of classified material further complicates safeguards with respect to international inspection. Standard containment surveillance and other S&S measures can be employed to ensure that material is not being diverted.

2.3 MOX Fuel Fabrication Facility

2.3.1 MOX Fuel Fabrication Facility Description

The MOX fuel fabrication facility fabricates MOX fuel bundle assemblies for the PCLWR using the PuO_2 from the PuP facility and other feed materials (such as UO_2, integral fuel neutron absorber, cladding, and bundle components) arriving from off-site. The MOX fuel fabrication facility will be federally owned and separate (although it may be collocated on the same federal reservation) from the PuP facility.

The feed oxide is received, stored as needed, purified if required, milled, screened, and blended into lots. It is then fabricated into pellets, the pellets are fabricated into rods, and the rods are assembled into bundles. The bundle assemblies are then stored on-site to await shipment to the PCLWR.

The overall facility size for the annual throughput rate of 68 MTHM/year [(metric tons heavy metal)/year] will depend on the existing building ultimately chosen. The building must have at least 80,000 ft^2 of contiguous, hardened floor space for process equipment. A number of such buildings are being considered that are located on a federal site with plutonium-handling infrastructure. The facility annual plutonium throughout is based on planned reactor consumption. The facility will have a PuO_2 storage capacity of roughly 15 MT in order to enable reload and interim storage. Any additional storage will be located at either the PuP facility or another vault that is part of the DOE complex.

2.3.2 MOX Fuel Fabricaton Facility Design and Construction

2.3.2.1 MOX Fuel Fabrication Facility Design and Construction Schedule

The duration and path of the design and construction tasks for the MOX fuel fabricationfacility are based on a generic DOE Major System Acquisition–Capital Construction Project. The design and construction process will begin at ROD with theconceptual design which will be completed by the DOE national laboratories. The 1-year site and facility selection process to determine the most appropriate exising facility on a federal site for the MOX fuel fabrication facility will start after the completion of the conceptual design. The selection process for the M&O contractor will start after the intermediate approval for line item funding. This contractor will be responsible for developing the Title I and II designs and for completing the facility modifications required for the MOX fuel fabrication facility. Work on Title II starts after approval of the Title I design and the final lineitem funding. The facility modifications and equipment procurement start after completion of Title II design and up to 1 year before the completion of the NRC licensing process. However, no safety-related construction may be done until after the license has been granted. The design and construction schedule is shown in Table 2.13 and as a part of Sect. 2.5.6.

2.3.2.2 MOX Fuel Fabrication Facility Design and Construction Cost

This category represents the bulk of the up-front or investment cost for the MOX fuel fabrication facility; in government accounting this cost is called TEC. It also represents the line item funding to be appropriated by Congress. In the ORNL LCC format, it is covered under categories 7–12 for the table appearing in Appendix C of this report.

Cost estimates were developed for a MOX fuel fabrication facility employing new equipment installed in an existing building on a government site already having plutonium-handling infrastructure such as analytical laboratories, S&S, waste handling, etc. Most

Task name

ng Process
ng Approval
tion Demons
l Facility Selection
ontractor
esign

lification
ion
ent
at Installation

e civil works costs r Category I
er that

owing
MOX fuel fabrication facility.

estimated
M/year of
, add
f
50M =

250M.

fuel fabrication vendor and
cility whose
been
uction
l in Sect.

s the TEC
n
ncludes Title
s calculated
10. The

I and II design and T
as ~20% of the sum

12

purchased from, insta and tested by the
vate MOX fuel fabric uipment vendor. It is
imated that $43M (ca b) is needed for the

equipment. This cate-
costs for the construc-
rentals, and quality
that a perimeter intru-
system (PIDAS) fence
(Construction
ategories 8a and 8b.
of
cludes purchase of
ment items needed
s early operating
~15% of the sum of
reasonable for a
tual design in ven-
ntingency) is
h
it of
the facility. It may be calculated by a future uncer-
tainty analysis.

Table 2.14. Design and construction costs for PCLWR MOX fuel fabrication facility in 24-category format

Category	Cost category description	67.7-MTHM/year government MOX plant in existing building [lump sum (1966 $M)]
	Average annual HM throughput in MTHM/year = 67.7	
	Capital or TEC part of up-front cost:	
7	Title I, II, III engineering, design, and inspection	40
8a	Capital equipment	125
8b	Direct and indirect construction/modification	43
9	Construction management (included in category 8b)	0
10	Initial spares (technology dependent)	10
11	AFI (15% of categories 7–10)	32
12	Risk contingency (to be derived from uncertainty analysis)	0
	TOTAL (TEC)	250

2.3.3 MOX Fuel Fabrication Facility Licensing and Permitting

It has been assumed that the MOX fuel fabrication facility, whether federally owned or privately owned, will be subject to NRC licensing.

There is a clear path forward provided in the existing licensing regulations promulgated by the NRC with regard to nuclear safety and radioactive waste management at MOX facilities. All permitting requirements from applicable federal statutes will apply.

The licensing approach for the reactor-based plutonium disposition options is to satisfy the NAS ES&H criteria "that any disposition option to operate in the United States:

- should comply with NRC regulations governing allowable emissions of radioactivity to the environment, and allowable radiation doses to workers and the public, from civilian nuclear-energy activities;
- should comply with international agreements and standards covering the disposition of radioactive materials in the environment; and
- should not add significantly to the ES&H burdens that would be expected to arise, in the absence of the weapons-usable plutonium disposition, from appropriate management of the environmental legacy of past nuclear-weapons production and from appropriate management of the ES&H aspects of past and future nuclear-energy generation."[1]

NEPA—The construction and operation of a new NRC-licensed MOX fuel fabrication facility requires an Environmental Impact Statement (EIS) under 10 CFR Part 51.20(b)(7).

Atomic Energy Act of 1954, as amended—Operations subject to NRC licensing or authorizations at the MOX fuel fabrication facility include:

- Possession, handling, and storage of source material (10 CFR Part 40) and SNM (10 CFR Part 70) plus access authorizations to SNM (10 CFR Part 11);
- Packaging and transportation of radioactive material (10 CFR Part 71); and, if applicable,
- Land disposal of radioactive waste (10 CFR Part 61).

In each case, a clear path forward exists, and regulatory criteria and guidance, although somewhat dated and subject to review and revision, are available to define an appropriate licensing strategy and plan if required.

Transportation of SNMs to and from the MOX fuel fabrication facility will be done in accordance with NRC regulations in 10 CFR Part 71, DOT regulations in 49 CFR Parts 171–179, and for wastes, EPA regulations in 40 CFR Part 263.

RCRA—Plutonium disposition represents no new or special permitting situation with regard to compliance with RCRA for treatment or disposal of hazardous waste. However, as a DOE program, all facets of the plutonium disposition mission are subject to the waste minimization/pollution prevention policies of the President and the Secretary of Energy with regard to the plans required of waste generators under Sect. 3002(b) of RCRA, and such a plan will be developed and implemented consistent with EPA guidelines published in the *Federal Register*. Special attention will be directed to avoiding the accumulation of hazardous and mixed waste without treatment options so that exemption requests to the enforcement provisions of Sect. 3004(j) of RCRA can be avoided.

Clean Air Act and Clean Water Act—New permits may be required if existing permits cannot be amended; however, no new or unusual permitting situations or special requirements are anticipated.

2.3.3.1 MOX Fuel Fabrication Facility Licensing Schedule

For this analysis, it has been assumed that the duration of the NRC licensing process will be 5 years and that the process will start after the conceptual design is complete. The NEPA process and the other site-specific permitting will require 3 years; each process will start after the site has been selected. The licensing schedule is shown in Table 2.15 and as a part of Sect. 2.3.6.

2.3.3.2 MOX Fuel Fabrication Facility Operation-Funded Project Costs

This section will cover LCC categories 1–6 in the 24-category estimating format described in Appendix C of this report. These six categories constitute what is termed preoperational or OPC. OPC is the portion of the TPC (investment, or up-front cost) budgeted with operating dollars rather than congressional line item capital or TEC dollars. Because this facility is likely to be government owned and funded, this distinction is important.

OPC generally includes the majority of the preconstruction activities and many of the start-up activities carried on by the operating contractor prior to full capacity operation of the facility and after construction is complete. As seen in Table 2.16, "NEPA, licensing and permitting" is just one of several needed cost centers.

R&D costs represent early estimates from the R&D plans submitted by the DOE national laboratories. It should be noted that the MOX fuel irradiation tests in a commercial reactor [lead-test assembly (LTA)] are covered under the reactor facility. The $35M for NEPA (post-1996 PEIS and new EIS activity), licensing, and permitting assume that the licensing/oversight body, whether it be NRC or DNFSB, will be reimbursed for the time required to process the application. Conceptual design and the preparation of implementation plans are activities undertaken by the project office with the assistance of the DOE national laboratories and private contractors. (These costs do not include DOE salaries.) The start-up activities funded are those undertaken by the contractor that will operate the plant and do not include start-up costs that are part of the construction contractor's mission. The costs in categories 1–5 have some contingency imbedded in each; however, the risk due to significant schedule slip or need for redesign is not included. A future uncertainty analysis will provide an estimate of the additional risk contingency. The total preoperational estimate of $100M is in line with the vendor estimates (in this cost model the OPC does not vary with the production capacity of the plant).

Table 2.15. MOX fuel fabrication facility licensing and permitting schedule

Task ID	Task name	Duration (months)	Start	Finish
1.	**Licensing and Permitting**	60	12/1997	12/2002
2.	NRC Licensing	60	12/1997	12/2002
3.	Environmental/NEPA/DOE	36	12/1998	11/2001
4.	Permitting	36	12/1998	11/2001

Table 2.16. Projected preoperational LCCs for the MOX fuel fabrication facility (including licensing and permitting costs)

Category	Description	Lump sum cost (1996 dollars $M)	Basis
1	R&D	21	LANL R&D plan
2	NEPA, licensing, and permitting	35	1995 FMDP estimate
3	Conceptual design	2	Vendor estimate
4	Implementation plans for S&S, QA, and site qualification	1	ORNL estimate
5	Postconstruction startup	41	Multiplier on annual operations staffing cost
6	Contingency to cover cost/schedule risk		Not yet assigned
	TOTAL PREOPERATIONAL COST	100	OPC in constant 1996 dollars

2.3.4 MOX Fuel Fabrication Facility Operations

2.3.4.1 MOX Fuel Fabrication Facility Shipment and Storage

Following conversion, the PuO_2 will be repackaged (utilizing the packages described in Appendix G) and shipped to the MOX fuel fabrication facility. This facility will operate on a schedule similar to the PCLWR operation schedule (~17 years). This will require that some of the incoming PuO_2 be placed in a storage vault, since the PuO_2 shipment campaign will be completed in 10 years. The storage vault could be accommodated in the design of the MOX fuel fabrication facility design, or DOE could choose to utilize excess vault capacity at another DOE site.

Table 2.17 summarizes estimates of the number of packages and shipments required for this shipment leg. Shipment will be by SST. Each SST will transport between 28 and 35 packages with approximately three SSTs per convoy.

2.3.4.2 MOX Fuel Fabrication Facility Operation Process

The MOX fuel fabrication facility contains nine material processing and handling sections as shown in Fig. 2.8.

Receiving and Storage—In the materials receiving and storage area, all fuel fabrication components are received, inspected, and sampled. After accountability is established, the materials are stored, observing criticality controls on plutonium and surrounding materials.

The interim storage vault receives PuO_2 that accumulates due to the higher throughput levels of the PuP facility as compared with the MOX fuel fabrication facility. This vault will have a maximum capacity of 15 MT of PuO_2.

PuO_2 Purification—In this process, PuO_2 is purified (if required) to the specifications for production of MOX fuel. The PuO_2 powder is analyzed for contamination and, if it meets purity requirements, goes to PuO_2 storage without further processing. PuO_2 that

Table 2.17. Parameters for PuO_2 transport leg

Maximum plutonium/package (kg)	Quantity of plutonium/campaign (kg)	Estimated packages to be shipped	Number of SST shipments/campaign
4.5	50,000	31,000	1,100

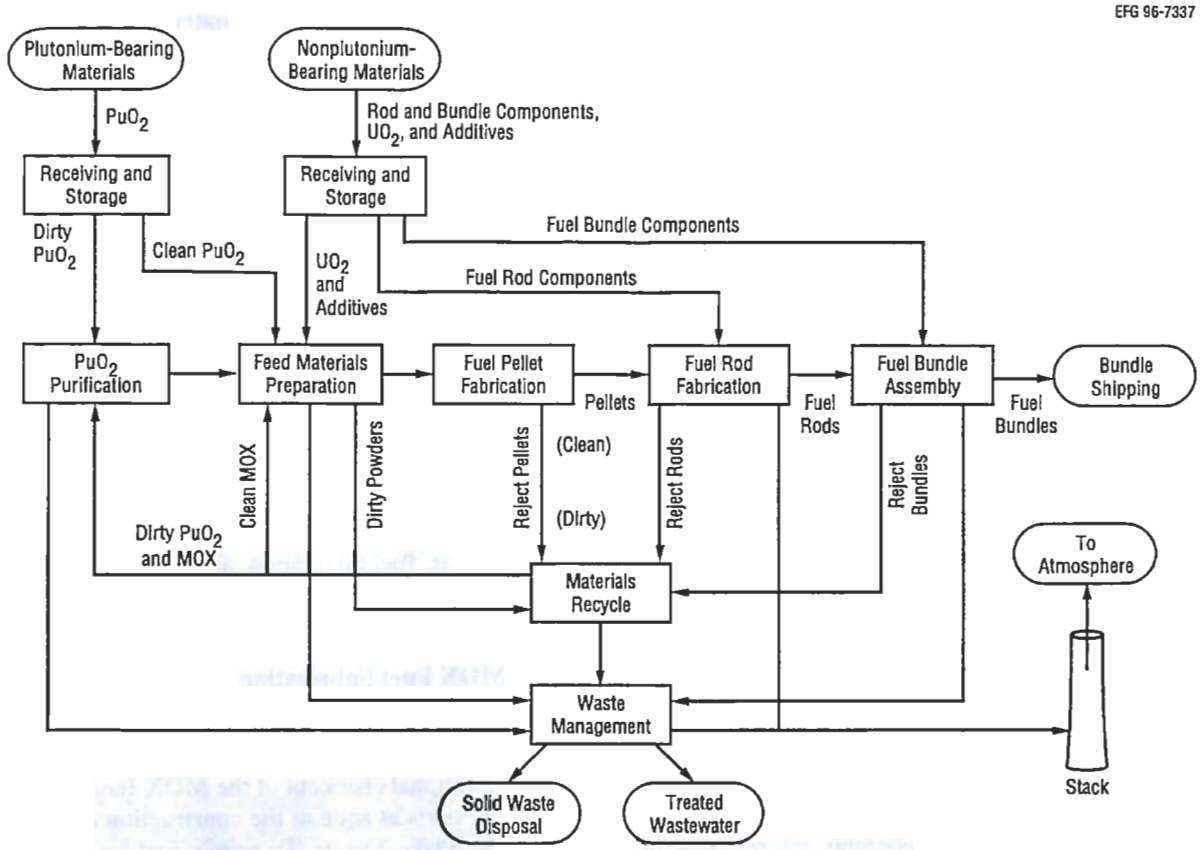

Figure 2.8. Generic MOX fuel fabrication facility process diagram

does not meet the purity requirements is dissolved, and the plutonium solution is processed through an ion exchange process to separate the plutonium from impurities. It is then treated to precipitate the plutonium, filtered, and calcined to PuO_2 powder. After analysis, PuO_2 meeting purity requirements is sent to PuO_2 storage. PuO_2 that still does not meet purity requirements is recycled through the purification process.

It is assumed that ARIES and other processes in the PuP facility produce a sufficiently gallium-free PuO_2 product that can go directly to the PuO_2 storage without additional processing. Similarly, the material leaving the mixed-feed processing lines in the PuP facility should also meet the PuO_2 feed specifications. Consequently, the PuO_2 purification process step may be sized strictly to handle material that does not meet specifications and must be processed again.

Feed Material Preparation—PuO_2 from receiving and storage, the purification process, and/or the materials recycle process is milled and screened to specification in batch lots. Any PuO_2 that does not meet dimensional specifications is recycled through milling. Any PuO_2 powder that does not meet purity specifications is sent to the materials recycle process. Several lots are then blended to ensure consistency through extended periods of production. The PuO_2 is then stored until needed. Depleted UO_2 received from off-site in ready-to-use condition is stored for later use. As needed, UO_2, PuO_2, recycled MOX, and integral fuel neutron absorber are removed from storage and placed in feed bins. Each quantity is weighed in correct proportion to form a batch and is placed in a mill/blender to achieve homogeneity. Portions from several batches are separated and cross-blended, then reblended by passing through the mill/blender again to form a large lot. The powder is agglomerated to form a free-flowing press feed and placed in storage. Batch size is determined by criticality safety limits on mass, but uniformity over much larger process units is desired to minimize sampling and optimize product consistency. All operations (including those that are automated) are performed in gloveboxes.

Fuel Pellet Fabrication—Conditioned feed material from either the storage or feed materials preparation

process is pressed into pellets, loaded into sintering boats, and then stored until needed. Rejected pellets are sent to material recycle. After the boats are placed in the sintering furnace, they are sintered in an atmosphere of argon (or nitrogen) with low levels of hydrogen. The pellets are then removed from the furnace and held in storage until needed. Rejected pellets are sent to material recycle. Sintered pellets are then ground to dimension and inspected for dimensional conformance, purity, and fissile content. Unacceptable pellets are sent to the materials recycle process. Acceptable pellets are placed in storage until needed. All pellet operations except sintering are performed in gloveboxes.

Fuel Rod Fabrication—Fuel rod fabrication begins by preparing rods for loading with fuel pellets. Stacks of pellets, springs, and spacers are assembled and loaded into the rods. The open end of the rod is decontaminated, and the end cap is welded on. The rod is inspected for dimensional tolerance and fissile loading, and a leak test is performed. Defective rods are recycled. Acceptable rods are cleaned and stored pending assembly into fuel bundles.

Fuel Bundle Assembly—This process prepares the components for fuel bundle assembly and removes the fuel rods from storage. The bundle is assembled, cleaned, and inspected for dimensional conformance. The bundle is then stored pending transfer to a reactor. Rejected bundles are sent to the materials recycle process.

Materials Recycle—When possible, materials are recycled to reduce amounts going to the on-site waste management.

Waste Management—Wastes are sent to the on-site waste management facility for processing and packaging before being sent to WIPP or a low-level waste (LLW) burial ground.

Bundle Shipping—Shipping the MOX fuel bundles to the PCLWR facility is discussed in the Reactor Shipment and Storage section.

Table 2.18 lists the batch characteristics for the receiving and storage, fuel fabrication, and shipping processes.

2.3.4.3 MOX Fuel Fabrication Facility Operations Schedule

The preoperational checkout of the MOX fuel fabrication facility starts as soon as the construction is complete and will take 2 years. To supply fuel for two reactors at the specified loading rate, the MOX fuel fabrication facility will operate for 17.1 years with an annual plutonium throughput of 2.9 MT. This

Table 2.18. MOX fuel fabrication facility batch process data

Process	Process cycle data[a]	Data (average)
Receiving and storage	Plutonium throughput	243-kg output
	Cycle time	1 month
	Plutonium input form	PuO_2
	Plutonium output form	PuO_2
MOX fuel fabrication	Plutonium throughput	2070 kg (initial) 3105 kg (equilibrium)
	Cycle time	1 year
	Plutonium input form	PuO_2
	Plutonium output form	MOX fuel bundles
Bundle shipping	Plutonium throughput	157 bundles 13.17 kg/bundle (initial) 19.75 kg/bundle (equilibrium)
	Cycle time	
	Plutonium input form	MOX fuel bundles

[a]Plutonium throughput represents amount of PuO_2 received in a single shipment. Cycle time represents interval between expected shipments of PuO_2.

throughput assumes an annual output of 157 assemblies, for a mission total of 2692 assemblies. The lead-use assemblies (LUAs) will be ready to load into a sister reactor 6 months after the start of operations at the MOX fuel fabrication facility. A sufficient number of MOX assemblies for the initial core loads will be available 30 months after the start of operation. The operational schedule is shown in Table 2.19 and as a part of Sect. 2.3.6.

2.3.4.4 MOX Fuel Fabrication Facility Operations Costs

Operation costs for the MOX fuel fabrication facility constitute more than just the cost of staffing and consumables for the 17.1 years of MOX fuel fabrication facility operations. Waste handling, fees, capital upgrades, transportation, and oversight also are included. These costs are reflected in categories 13–19 and item 23 of the 24-category format. These costs are often called recurring costs, since the annual costs tend to remain nearly constant over the plant lifetime for a given production rate (in this case 67.7 MTHM/year).

A costing approach developed by ORNL and LANL was used to calculate the sum of all recurring costs, not including transportation of PuO_2 powder to the MOX fuel fabrication facility from the PuP facility. The approach essentially scales with throughput (MTHM/year) with the addition of a fixed component of $50M/year, which exists independent of the production rate up to 45 MTHM/year. (This means that it costs $50M/year just to keep the doors of a plutonium handling facility open, even if there is no production. Experience at the DOE/Defense Programs sites shows this tendency to be true.) The MOX fuel fabrication facility is assumed to use automated rather than hands-on technology, thus reducing the number of staff needed and reducing personnel radiation exposure. The approach used is as follows:

Annual recurring cost (not including transportation) = $50M/year + 0.6 (MTHM/year – 45).

For the 67.7-MTHM/year production rate for the MOX fuel fabrication facility, a recurring cost total of $63.6M/year results. This cost is incurred for each of the 17.1 years of MOX production for a total of $1088M. This annual cost is somewhat lower than the annual cost projected for a similar-size commercial MOX fuel fabrication facility with 40-year MOX missions (e.g., typically $70M to 80M/year). The short life of the facility (17.1 years) should significantly reduce the capital upgrade rate, that is, the fraction of TEC that represents the need to replace major equipment items that fail or wear out. The fact that an existing federal site is being used also results in shared indirect or overhead costs with other site functions as opposed to a greenfield plant where all overheads would be assigned to the MOX fuel fabrication facility cost center. Such overhead functions include security, waste handling, and analytical laboratories. It was again necessary to partition the annual cost calculated from the approach into the 24-category format needed for the LCC analysis. Table 2.20 shows the result of this partitioning and the cost basis for most of the entries. A few assumptions should be noted regarding some of the entries:

Table 2.19. MOX fuel fabrication facility operational schedule

Task ID	Task name	Duration (months)	Start	Finish
1.	**Preoperational Phase**	24	12/2004	12/2006
2.	**Plutonium Processing Lead Time Complete**			9/2006
3.	**MOX Fuel Fabrication Facility Ready for PuO_2**			12/2006
4.	**Operation**	211	12/2006	7/2024
	MOX Fuel Fabrication Facility Operation Start			12/2006
	LUA Fabrication	6	12/2006	6/2007
	Fabrication of Initial Core Loads	25	6/2007	6/2009
	MOX Fuel Fabrication Facility Duration	205	6/2007	7/2024

20
21
22a
22b
23
24

ual waste di-

co
at a 00/year, v
rep
operators/mechanics/technici
$80,000/year for each indirec
luding plant management
indirects to
handling fac
regulatory, a
facilities.

Major Capital Replacements
capital replacement rate is base
a MOX facility with a longer c e, this
percentage could be considerab

assumed the
o paid for by
A projected for t
purpose.

M&O Contractor Fees (category 18
tractor and PILT are calculated as 2%
total of categories 13-16, respectively.

Transportation (category 23)—The annual transportation cost of $1.5M/year was calculated by the ORNL Transportation and Packaging Research Group. It represents transportation of PuO_2 powder from the existing SRS PuP facility to the generic federal MOX fuel fabrication facility site and the transportation of wastes from the MOX fuel fabrication facility to their final disposal site.

Summing the partitioned recurring and transportation costs gives a total of $65.1M/year for the MOX fuel fabrication facility. (Examination by a European MOX vendor indicated that this is a reasonable value for a plant of this capacity using a site shared with other plutonium-handling functions.)

2.3.5 MOX Fuel Fabrication Facility D&D

The MOX fuel fabrication facility will be constructed for the sole purpose of dispositioning surplus plutonium identified by this program. At the completion of this mission the MOX fuel fabrication facility will promptly undergo D&D.

2.3.5.1 MOX Fuel Fabrication Facility D&D Schedule

The duration for the D&D of the facility has been estimated to be 2 years (Table 2.21).

2.3.5.2 MOX Fuel Fabrication Facility D&D Costs

It is assumed that the MOX fuel fabrication facility will not be used for commercial MOX fuel fabrication and that the plant will undergo D&D after the FMDP campaign is completed. The goal of D&D is not to return the facility to a greenfield condition but rather to remove and dispose of contaminated equipment and return of the building to habitable status. At this stage of cost estimating, D&D is usually calculated as a percentage of TEC. A 10% rule of thumb is common for new or greenfield facilities. A higher value of 20% is used here because the TEC is low compared with a greenfield facility, and FMDP will be required to return a clean building to the site management at end of life. Therefore, 20% of $250M provides $50M for D&D (category 20).

2.3.6 MOX Fuel Fabrication Facility Schedule Summary

The overall MOX fuel fabrication facility implementation schedule is summarized in Table 2.21 and shown in Fig. 2.9. This facility schedule is also shown in the discussion of the overall alternative schedule in Chap. 3. This schedule does not include any contingency for schedule slip due to site selection difficulties, redesign, construction delays, or a delay in the approval of line item funding.

Table 2.21. MOX fuel fabrication facility schedule summary

Task ID	Task name	Duration (months)	Start	Finish
1.	FMDP ROD			12/1996
2.	Congressional Funding Approval	36	12/1996	12/1999
3.	Fuel Qualification Demonstration	60	4/1996	4/2001
4.	Site and Facility Selection	12	12/1997	12/1998
5.	Select M&O Contractor	12	12/1998	12/1999
6.	Licensing and Permitting	60	12/1997	12/2002
7.	Design Process	60	12/1996	11/2001
8.	Facility Modification	36	12/2001	12/2004
9.	Preoperational Phase	24	12/2004	12/2006
10.	PuP Facility Lead Time Complete			9/2006
11.	MOX Fuel Fabrication Facility Ready for PuO_2			12/2006
12.	LUA Fabrication	6	12/2006	6/2007
13.	MOX Fuel Fabrication Facility Lead Time	25	6/2007	6/2009
14.	Operation	205	6/2007	7/2024
15.	D&D	24	7/2024	7/2026

ID	Task Name
1	FMDP Record of Decision
2	Congressional Funding Approval
3	Initial Funding Process
4	Final Funding Approval
5	Fuel Qualification Demo
6	Site Selection
7	Select M&O Contractor
8	Licensing and Permitting
9	NRC Licensing
10	Environmental / NEPA / DOE
11	Permitting
12	Design Process
13	Conceptual Design
14	Title I
15	Title II
16	Facility Modification
17	Construction
18	Procurement
19	[illegible]
20	[illegible]
21	[illegible]
22	[illegible]
23	[illegible]
24	[illegible]
25	[illegible]
26	[illegible]

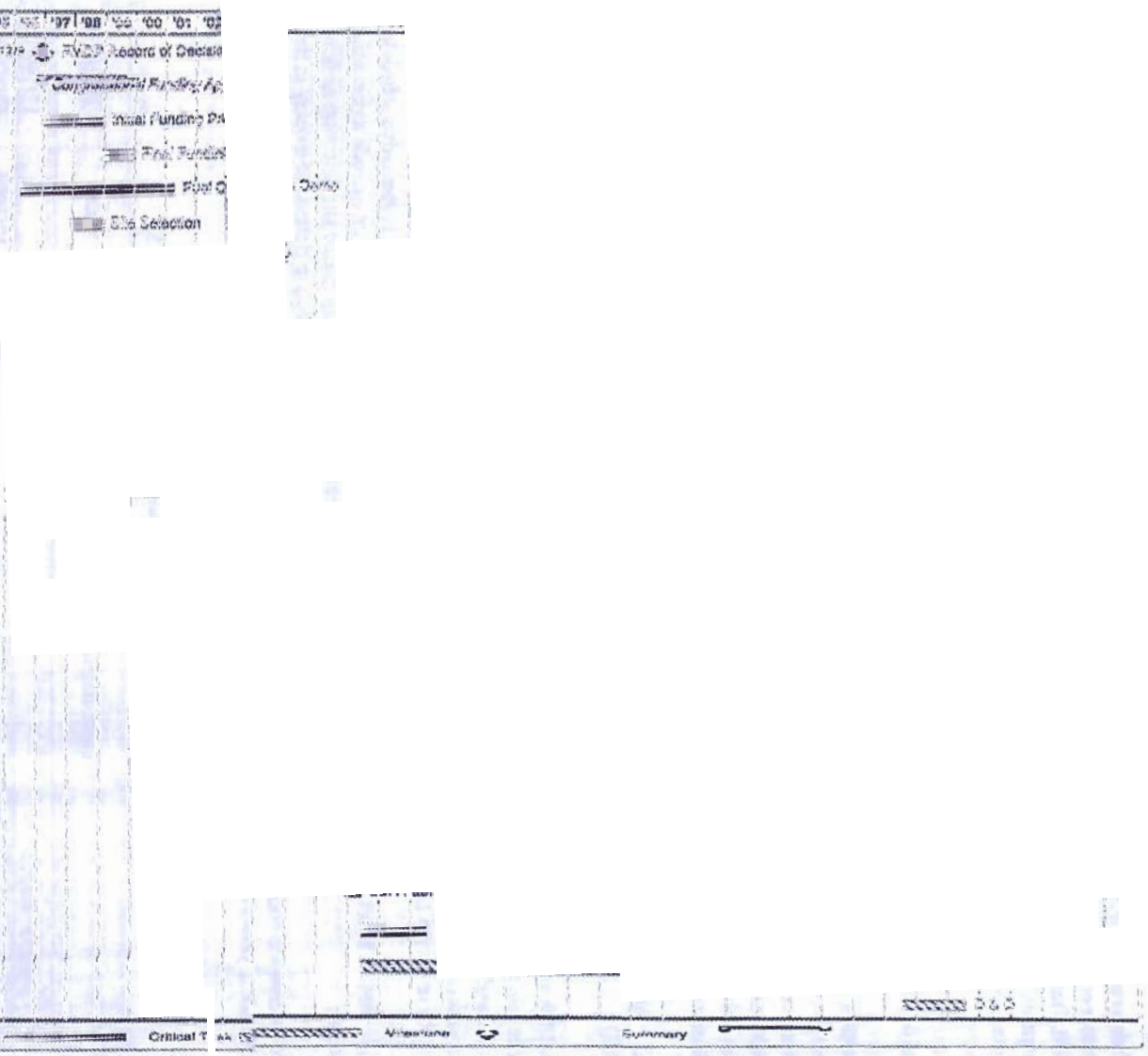

Figure 2.2. [illegible] fabrication facility schedule summary

The critical path through development of this facility is through the conceptual design and the NRC licensing process before construction may begin. If either of these tasks slips in its schedule, the rest of the implementation process will also be delayed. This critical path is shown in Fig. 2.9.

2.3.7 MOX Fuel Fabrication Facility Cost Summary

Table 2.22 shows a summary of the MOX fuel fabrication facility LCCs in the 24-category format. All anticipated MOX fuel fabrication facility-related costs from FY 1997 forward are included in this table. Chapter 3 of this report compares these LCCs with those for other facilities needed for the overall program.

2.3.8 MOX Fuel Fabrication Facility S&S Summary

DOE and its predecessor agencies have successfully managed S&S of SNMs for several decades. DOE maintains an impeccable record of providing adequate measures to ensure against theft or unauthorized access to SNMs. These measures include physical security, material accountability, inventory safeguards, and other technologies. These measures have been applied to SNMs in a variety of material forms, ranging from bulk SNM powders and solutions to pits.

An assessment has been performed to identify where critical vulnerabilities might exist in operations or processes that make up the reactor disposition alternative. The purposes of the assessment were (1) to determine whether any inherent vulnerabilities exist that represent unique or novel threats to maintaining adequate measures against theft or unauthorized access and (2) to identify any threats in the reactor disposition alternative operations that will require particular attention by facility designers to ensure that potential vulnerabilities are properly addressed.

This section discusses the vulnerabilities to theft and unauthorized access intrinsic to the material forms and processing environments in the PuP facility. In the sense employed here, a "risk"" is a set of conditions that require specific measures to ensure proper physical control of SNMs. These risks should not be interpreted as the overall risk that the material will be subject to in the as-built facilities. The overall risk in the as-built facility is driven to very small values by the S&S measures incorporated in the design and operation of the facility.

Possible Diversion, Theft, or Proliferation Risks—Although the material will be changing form and concentration in this facility, it all still meets the definition for Category IC material. However, with respect to both covert and overt theft, there are considerable differences as the material is made into MOX fuel. The facility operations involve a large number of processing steps where material is relatively accessible. The input material will be fairly pure oxide powder, and the risk of covert and overt theft is greatest in the early process steps. As the PuO_2 is blended with UO_2 to make pellets, the concentration of the plutonium decreases. Because these forms are accessible and transportable, they are still attractive targets for both covert and overt theft, although more material would be needed to make a nuclear device. After the pellets are fabricated into fuel rods and subsequently into fuel assemblies, they are much less transportable; thus, they become more difficult for overt theft. Likewise, the fissile material within the fuel rods and assemblies is no longer physically accessible and is now accounted for using item accountancy, thereby reducing the opportunities for covert theft to a low risk and for overt theft to medium risk.

Environmental Conditions—Table 2.23 provides process environmental conditions, material form, and other S&S information. The environment for the first part of the MOX fuel fabrication facility is very similar to that of the PuP facility, and the intrinsic process risk is at its highest. After fuel rods and assemblies are made, the risk becomes medium. The MOX fuel fabrication facility will be a Category I facility with a high throughput and a nearly continuous operation. No intrasite transport will be required outside the MAA, and again SSTs will be used to both deliver and pick up the material.

Material Form—As in the case of the PuP facility, the initial feed material is very attractive material (Category IC). The intrinsic attributes of this material are the same as described previously. Once the material has been blended, it would be slightly more difficult to convert to a weapons-usable form, and because the concentration of the plutonium is lower, more material would be required to acquire a significant quantity. Once the MOX is placed into fuel rods and then fuel assemblies, its chemical, isotopic, and radiological attributes would not change, but the mass/dimensions of the "containers" would increase, thus making it more difficult to move.

Table 2.22. LCCs for PCLWR MOX fuel fabrication facility in 24-category format

Category	Cost category description	67.7-MTHM/year government MOX plant in existing building	
		[Lump sum (1966 $M)]	[Annual (1966 $M)]
	Average annual HM throughput in MTHM/year = 67.7		
	Years of operation = 17.1		
	Preoperational or OPC part of up-front cost		
	Up-front costs:		
1	R&D	21	N/A
2	NEPA, licensing, permitting	35	N/A
3	Conceptual design	2	N/A
4	Implementation plans: QA, site qualification, S&S plans	1	N/A
5	Postconstruction start-up	41	N/A
6	Risk contingency	0	N/A
	TOTAL OPC	100	N/A
	Capital or TEC part of up-front cost		
7	Title I, II, III engineering, design, and inspection	40	N/A
8a	Capital equipment	125	N/A
8b	Direct and indirect construction/modification	43	N/A
9	Construction management (included in category 8b)	0	N/A
10	Initial spares (technology dependent)	10	N/A
11	AFI (15% of categories 7–10)	32	N/A
12	Risk contingency	0	N/A
	TOTAL TEC	250	N/A
	TOTAL UP-FRONT COST (TPC)	350	
	Other LCCs (17.1 years of operation):		
	Staff size (total): FTEs @ $77,900/year/FTE = 353		
	Staff size (directs): FTEs = 80		
	Staff size (indirects): FTEs = 273		
13	O&M staffing	471	27.6
14	Consumables (including utilities)	298	17.4
15	Major capital replacements or upgrades	202	11.8
16	Waste handling and disposal	68	4.0
17	Oversight	17	1.0
18	M&O contractor fees (2% of categories 13–16)	21	1.2
19	PILT to local governments (1% of categories 13–16)	11	0.6
	Recurring cost sum	1,088	63.6
20	D&D (20% of TEC)	50	
21a	Revenues (if applicable) MOX or electricity	N/A	
21b	Revenue from sale of reactor	N/A	
22	Government payments or fees to private-owned facility	0	
23	Transportation of plutonium forms to facility (OR T&PT)	26	1.5
24	Storage of plutonium at existing 94-1 site facility	N/A	
	TOTAL OTHER LCC	1,164	65.1
	GRAND TOTAL ALL LCC (1996 constant dollars)	1,514	

Table 2.23. Nonprol[illegible]tion an[illegible]

Environment	Activity		
			3100 kg
	[illegible] and	2 months	520 kg pluto[illegible]
	fabrication	1 year	3100-kg/year [illegible] 68 MTHM/y[illegible]
	Fresh fuel shipping	1 year	157–241 assemblies 19.75 kg/plutonium assembly
Transport	MOX fuel fabrication to reactor	1–2 months	

Table 2.23. Nonproliferation and S&S risk assessment for the PCLWR MOX fuel fabrication facility (cont.)

Facility	Activity	SNM input	SNM output	Quantity	Concentration of plutonium (other fissile materials)	SNM category*	Item mass/ dimensions	Radiation barrier	Chemical composition	Isotopics
MOX fuel fabrication facility					No other fissile material	DUU				
	Receiving and storage	Oxide, MOX fuel unirradiated	Metal, oxide, MOX fuel	500–1000 kg		IC		No	Oxide	
	MOX fuel fabrication	Oxide	Fuel assemblies	161 kg/batch	0.045 g/g HM	IC		No	Oxide, pellets, rods, assemblies	
	Fresh fuel shipping	MOX fuel assemblies (fresh)	Fuel assemblies		0.045 g/g HM	IC		No		
Transport	MOX fuel fabrication to reactor									

Note: DUU—direct use unirradiated.
*See Table 2.12.

Table 2.23. Nonproliferation and S&S risk assessment for the PCLWR MOX fuel fabrication facility (cont.)

S&S								
Facility	**Activity**	**Number of MBAs**	**Type accounting system**	**Nuclear measure**	**Classified material**	**Physically accessible**	**Access**	**Special handling equipment**
MOX fuel fabrication facility		~5	50% Item	0.6% (domestic) 2.5% (international)				
	Receiving and storage		Both	Calorimetry, neutron, gamma	No	Yes	Hands-on	No
	MOX fuel fabrication		Bulk		No, proprietary	No	Hands-on, remote	No–Yes (for rods/ assemblies—crane)
	Fresh fuel shipping		Item		No	No		Yes (for assemblies—crane)
Transport	MOX fuel fabrication to reactor					Yes		

Note: MBA—material balance area.

S&S Assurance—During the initial processing operations—until the material is placed into the fuel rods—bulk accountancy would be conducted, and then item accountancy would be performed. Although devices are being developed to perform NDA on fuel pins/assemblies, this is still a very time consuming activity. Once the material is placed inside the fuel pins, it is not accessible and requires special handling equipment to move the assemblies.

Potential Risks to Diversion—Similar diversion opportunities exist in this facility for the initial process operations, as exist in the PuP facility. After the material has been blended, it becomes a less attractive target. Once the material is made into fuel pins and assemblies and item accountancy is used, the possibility for diversion is reduced and the risk is medium. Because the fuel pins and assemblies are quite large and require special handling equipment, containment and surveillance measures can more easily detect diversion attempts.

Difficulty of Diversion, Retrieval, Extraction, and Reuse—The attractiveness of the material in the early processing steps is similar to the PuP activities and is high. If diversion does occur, only moderate chemical barriers exist to prevent conversion and reuse, and the risks are medium. Once the material is blended, the concentration of plutonium is decreased, and its attractiveness is reduced. Once the material is made into MOX fuel and placed into fuel pins and assemblies, the material becomes more difficult to divert.

Assurance of Detection of Retrieval & Extraction—The front-end operations in this facility are similar to those in the PuP facility. After the material has been blended, a greater amount of material will be required to accumulate a significant quantity. Once it has been placed into fuel pins and assemblies, the individual items will be accounted for, increasing the ability to detect diversion.

2.3.9 MOX Fuel Fabrication Facility Technical Viability

Five factors were considered to develop a qualitative assessment of the technical viability of a concept: a definition of the technological maturity of a process; the specification of the technical unknowns for the process and the technical risk associated with the application of the process; the R&D needs of the process; the condition, capacity, and reliability of infrastructure; and the regulatory and licensing requirements. Each of these items, except infrastructure, will be addressed in the following sections.

Technological Maturity—Judging the maturity of the technologies employed in plutonium disposition facilities requires an assessment of the current level of development of each stage of the fuel cycle. Technologies can be categorized as being at the concept/design stage, the laboratory or bench-scale testing stage (demonstrating scientific feasibility), the prototype stage (demonstrating engineering feasibility), or the industrialization/commercialization stage. Even if a significant domestic development base does not exist, a foreign experience base may be available.

MOX fabrication is a well-developed technology, considerably into the industrialization/commercialization stage, with commercial LWR MOX plants currently operating in Great Britain (BNFL), France (COGEMA), and Belgium (Belgonucleaire). Most of the processes employed in these commercial operations will also be employed in the MOX fuel fabrication facility for plutonium disposition.

Variations from commercial technology will be required to meet the goals of the disposition program.

These new/additional processes are at varying levels of technological development (from conceptual stage for addition of integral fuel neutron absorbers to the MOX, to commercialized but proprietary stage for processes to ensure fuel homogeneity). Individual processes are assessed in succeeding sections.

An important variation from commercial technology will be the use of weapons-grade plutonium isotopics instead of reactor-grade plutonium isotopics. However, this change will not likely influence the choice of technology but only the engineering implementation of a technology (e.g., sizing of equipment).

Technical Risks—Certain technologies have associated technical unknowns. Consequently, risks are associated with the application of the technologies based on these parameters.

MOX fuel fabrication is a well-developed technology with a large amount of commercial experience in Europe. One technical issue that must be resolved is that the plutonium feed material will have impurities that are not present in plutonium that results from reprocessed LWR spent fuel. Operation of reactors with full-MOX cores (due to the programmatic schedule criteria) introduces the need for integral fuel neutron absorbers mixed with the fuel (a new technology for MOX fuel). Specific technical issues that must be resolved include acceptable integral fuel neutron absorber distribution within the fuel and acceptable chemical interactions with the fuel and/or clad. Other issues include demonstration of acceptability of PuO_2 from multiple feed stocks and proper treatment of waste.

The risks associated with these technical unknowns (except for the waste studies) are all the same. Unacceptable fuel production will delay the disposition of plutonium and jeopardize achievement of program goals. Considering the current level of technical development, the degree of risk associated with the MOX fuel fabrication process is thought to be low.

R&D Needs—Various parameters are identified as unknown or poorly known for this alternative. Six R&D issues associated with MOX fuel fabrication will address each of these technology development needs.

1. Depletable Neutron Absorber Impact—R&D is required to develop and demonstrate the processes required for adding depletable neutron absorbers to the fuel.

2. Large-Scale Impurity Removal—The R&D proposed is focused on developing impurity removal processes that would have minimal waste streams.

3. Feed Plutonium Impurity Impact—As indicated before, the feed material of interest contains impurities that might adversely affect either fabrication or reactor operations. However, it is not certain that the effect of these impurities will be unacceptable, so R&D is proposed to determine if removal of impurities is unnecessary.

4. PuO_2 Feed Morphology—The powder blending stage of the fuel fabrication process is extremely sensitive to the morphology of the powder feeds. Because the feed material is coming from a variety of sources, it will be necessary to demonstrate that the morphology of the oxides can be altered to meet feed specifications.

5. Fuel Component Homogeneity—Introduction of depletable neutron absorbers into the fuel matrix has been proposed for the partially complete reactor. Consequently, pellets manufactured in this manner must be tested to ensure a homogeneous distribution of both the PuO_2 and depletable neutron absorber throughout the fuel matrix. Although statistical-based destructive testing could be used, R&D is proposed to develop nondestructive techniques that would simplify the process, be more accurate, and reduce waste production.

6. Process Scrap Recovery—Technology currently exists for recovery and recycle of materials that fail to meet specifications at the various stages of fabrication. However, these processes are all aqueous-based processes and are significant waste generators. Several advanced processes have been proposed that would perform these operations with dramatically reduced waste streams. Thus, R&D is proposed to develop these other alternatives.

2.4 PCLWR Facility

The completed reactor facility receives MOX fuel from the MOX fuel fabrication facility containing surplus plutonium and irradiates it to achieve the characteristics defined in the FMDP spent fuel standard (SFS). A number of different nuclear steam supply system designs have been installed in the various deferred and canceled units that may be potential candidates for the mission. The fuel throughput characteristics of a MOX-fueled ABB-CE System 80 were chosen as the surrogate reactor concept for the evaluation of this alternative.

At present, the Tennessee Valley Authority's Bellefonte-1 and -2 units appear to be the only viable partially complete option that would require licensing a single type of reactor. These reactors could be completed and used in the desired time frame to complete the disposition mission.

2.4.1 PCLWR Facility Description

Figure 2.10 is a photograph of a typical PWR facility. A representative overall facility size for the combined annual throughput of 3050 kg of plutonium (average plutonium dispositioned per year for the pair of reactors) is 1500 acres for a two-reactor site.

Figure 2.11 shows the storage and associated material handling steps. Each of the two reactor facilities has the following material processing and handling sections: fresh MOX fuel storage, fuel storage pool (or pit), reactor, spent fuel cooling pool, and dry spent fuel storage. Ideally, spent fuel will be removed from the spent fuel pools after a 10-year postirradiation period and transported directly to a geologic repository for emplacement. However, the reactor process also includes a fourth process step whereby spent fuel would be removed from the pools and placed into onsite dry storage in specially designed canisters in the event the geological repository is not ready to accept the spent fuel.

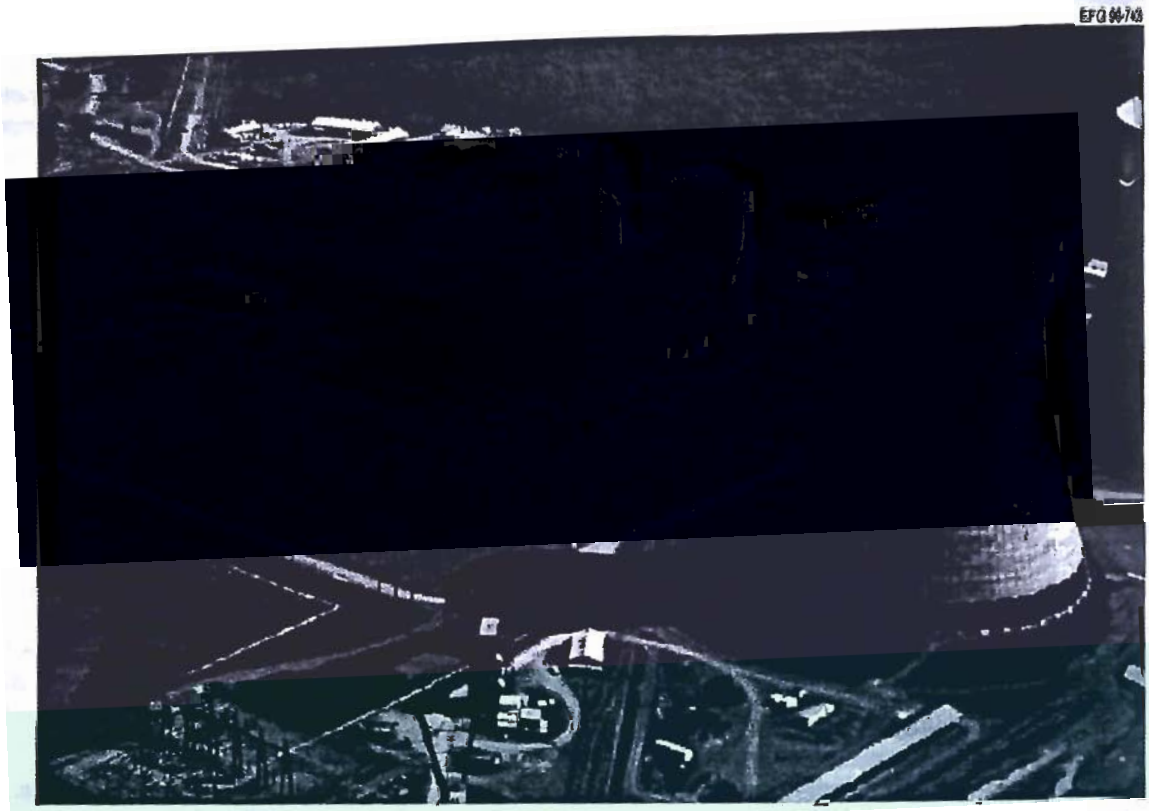

Figure 2.10. A typical PCLWR site

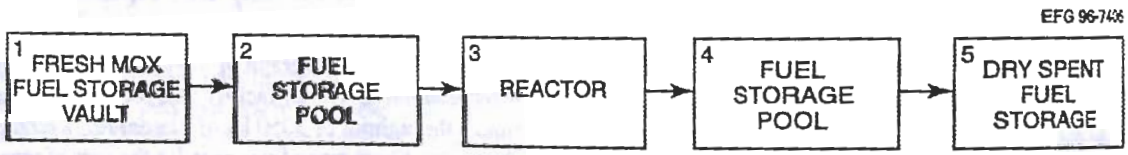

Figure 2.11. PCLWR facility process diagram

2.4.2 PCLWR Facility Design and Construction

PCLWR Facility Design—As stated earlier, the throughput calculations for this concept are based on the ABB-CE System 80 design. Each unit has a core power rating of 3800 MW(t) [3817 MW(t) for the total nuclear steam supply system]. The core power rating and fuel throughput for this option obviously would rely on the actual site chosen.

The full core is assumed to comprise 241 fuel assemblies, each of which encompasses a 16 × 16 fuel rod array. The plutonium enrichment of the fuel is assumed to be 4.5 wt %.

A typical nuclear steam supply system is shown in Fig. 2.12. A typical cutaway view of the plant is shown in Fig. 2.13.

PCLWR Facility Construction—Several deferred and canceled units (at differing stages of completion) exist in the United States. The analysis of this alternative assumes that Unit 1 and the common systems of the plant are approximately 90% complete. Unit 2 is assumed to be approximately 60% complete.

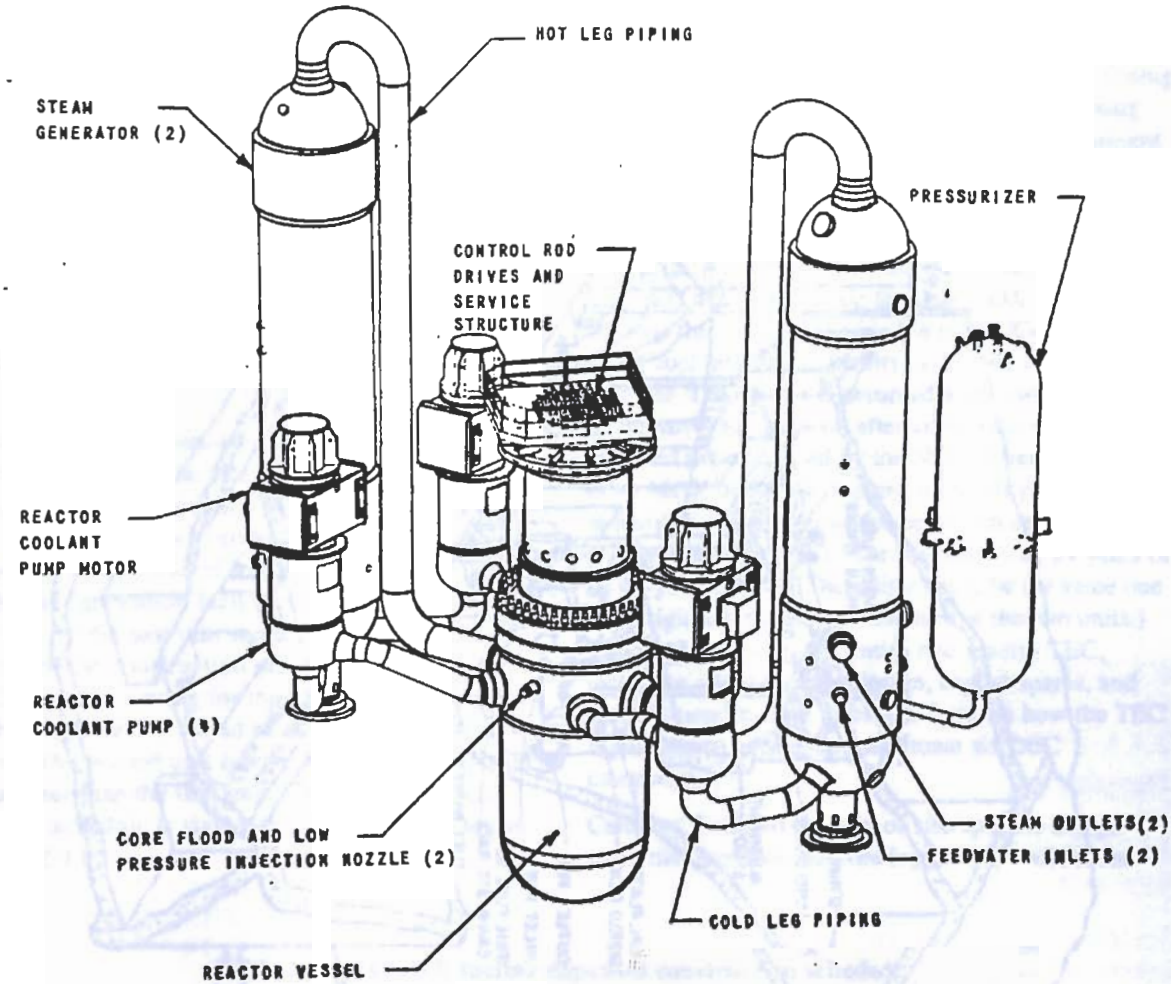

Figure 2.12. A typical PWR nuclear steam supply system

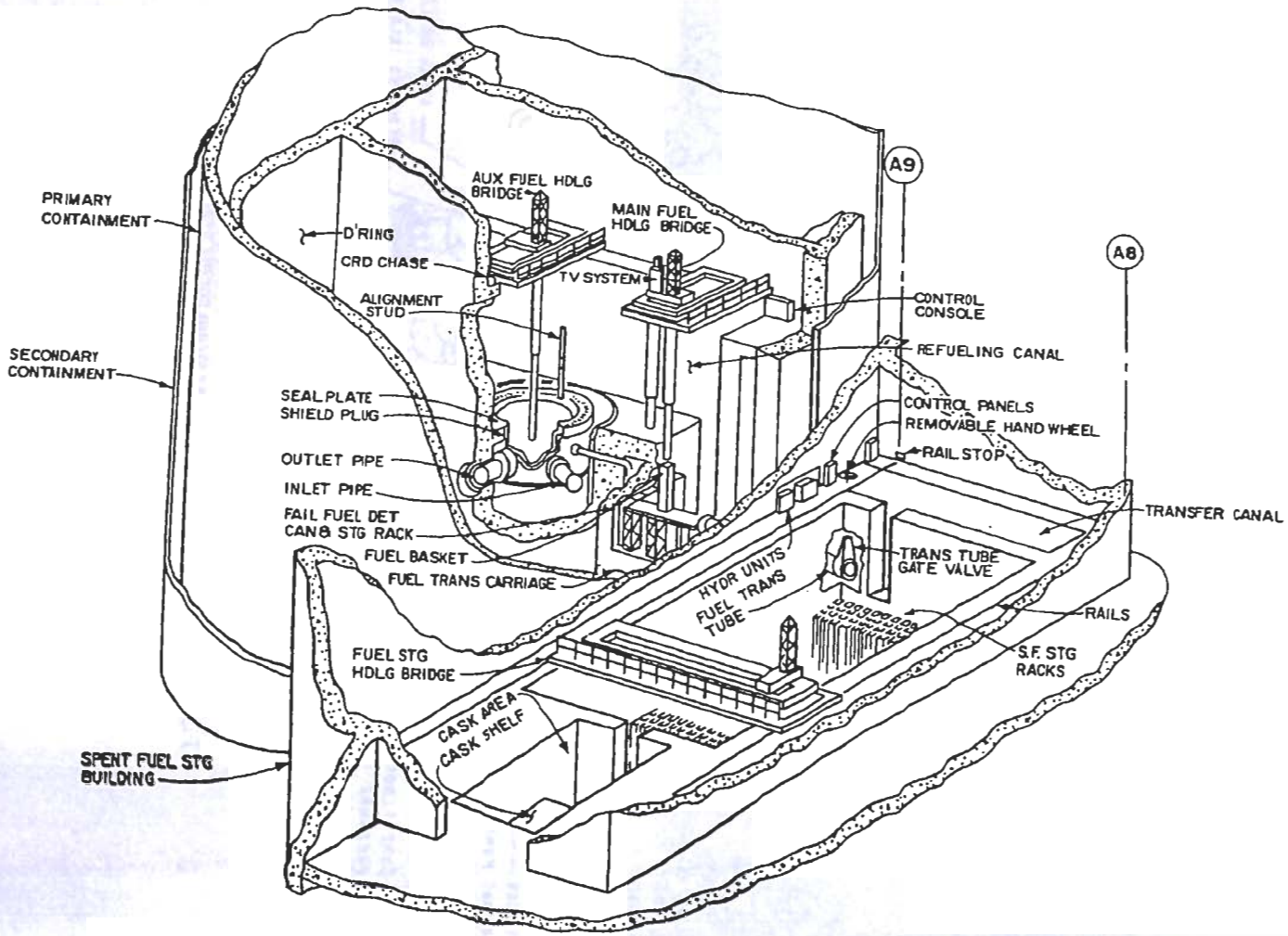

Figure 2.13. A typical PWR fuel flow path

For Unit 1 and the common systems, a number of remaining activities would need to be completed once construction is restarted. Typically, these activities would include the installation of protective coatings, control room modifications, and the installation and pull of some cabling and conduit. Staff training and subsequent start-up operations on a full MOX core would ensue. For Unit 2, the aforementioned activities must also be done. In addition, large- and small-bore piping and associated pipe hangers must be installed.

The reactor construction phase of this alternative could encompass a wide span of activities, depending on the status of the construction, length of deferment, quality of documentation, and other factors. No attempt was made to quantify the large uncertainties associated with the resumption of construction on various U.S. sites.

2.4.2.1 PCLWR Facility Design and Construction Schedule

After approval of intermediate line item funding, the project begins with the selection of an M&O contractor and project mobilization. The completion of the first unit has been set to coincide with the availability of the initial core load of fuel assemblies from the MOX fuel fabrication facility in June 2009. If construction on the first unit started directly after the transfer of the construction permit to the new contractor without waiting for the MOX fuel fabrication facility, the reactors would be complete 3 years sooner. The second unit is scheduled to be completed 1 year later than the first unit. The design and construction schedule is shown in Table 2.24 and as part of Sect. 2.4.6.

2.4.2.2 PCLWR Facility Design and Construction Cost

This cost category, TEC, represents the bulk of the up-front or investment cost for the PCLWR facility. It also represents the line item funding appropriated by Congress. In the ORNL LCC format, it is covered under categories 7–12 in the table in Appendix C of this report.

The TEC for the PCLWR facility is for the remaining design, completion of construction, and vendor testing of two government-owned PCLWRs on an existing southeastern utility site. It is assumed that the present utility owner essentially gives the two PCLWRs to DOE-FMDP at no cost. DOE-FMDP then contracts for the remaining design and construction of the two units. Categories 7–12 indicate the remaining TEC. The TEC does not include the first MOX core, because this cost is imbedded in the LCCs for the MOX fuel fabrication facility, also built by the government. The reactor is assumed to be owned by the government for 16 years after commissioning and is assumed to be licensed by the NRC. After completion of its MOX operation, the reactor facility will be sold to a utility or corporation for operation on low-enriched uranium (LEU) for the remaining 24 years of its 40-year license. (The utility could be the same one that originally started construction of the two units.) The $1432M covers the entire two-reactor TEC, including any remaining design, capital spares, and management reserve. Table 2.25 shows how the TEC is partitioned among its constituent six LCC categories.

Category 7 consists mostly of site-specific design work that provides the drawings and specifications

Table 2.24. PCLWR facility design and construction schedule

Task ID	Task Name	Duration (months)	Start	Finish
1.	**FMDP ROD**			12/1996
2.	**Intermediate Funding Approval**	24	12/1996	12/1998
3.	**MOX Fuel Fabrication Facility Lead Time**	25	6/2007	6/2009
4.	**Mobilization and Select M&O Contractor**	27	12/1998	3/2001
5.	**Reactor Construction**	66	12/2004	6/2010
6.	Complete Unit 1	54	12/2004	6/2009
7.	Complete Unit 2		3/2006	6/2010

Table 2.25. Design and construction costs for a government-owned two-PCLWR facility

Category	End-to-end alternative	Cost ($M)	Category bais
	Capital or TEC up-front costs:		
7	Remaining engineering, design, and inspection	346	Utility data
8	Remaining direct and indirect construction/modification	633	Utility data
9	Construction management (percentage of category 8)	0	Imbedded in category 8 cots
10	Initial spares	108	Utility data
11	AFI (32% of categories 7–10)	345	Utility data
12	Risk contingency (derived from uncertainty analysis)	0	To be calculated from uncrtainly analysis at later date
	TOTAL TEC	1432	TEC in 1996 dollars

for completing the two units at a hypothetical southeastern site. Category 8 covers the direct and indirect construction costs, that is, the craft labor, commodities, and equipment needed for the plant completion. This category also picks up category 9 (Construction Management) in the data provided by the utility. The AFI rate of 32% of categories 7–10 is the utility's estimate of the management reserve needed to cover cost risks. A risk contingency (uncertainty) analysis has yet to be performed to determine the category 12 entry.

2.4.3 PCLWR Facility Licensing and Permitting

2.4.3.1 PCLWR Facility Licensing and Permitting Approach

There is a clear path forward provided in the existing licensing regulations promulgated by the NRC with regard to nuclear safety and radioactive waste management at commercial nuclear reactor facilities. The nuclear safety case for commercial PCLWRs will have been reviewed by the NRC in the preliminary safety analysis report, and the NRC will have issued a construction permit. Portions of the final safety analysis report may have already been prepared by the licensee and submitted to the NRC for review. The NRC reviews performed for the construction permit and in preparation for an operating license will have been based upon the uranium fuel cycle. In addition, site permits under applicable federal environmental statutes will be in place for construction activities and in process for planned future operations. The implementation of the plutonium disposition mission in a PCLWR will be treated as a regulated change to existing licensing or permitting conditions affecting plans for future operations.

The licensing approach for this reactor-based plutonium disposition alternative is to satisfy the NAS ES&H criteria "that any disposition option to operate in the United States:

1. should comply with NRC regulations governing allowable emissions of radioactivity to the environment, and allowable radiation doses to workers and the public, from civilian nuclear-energy activities;

2. should comply with international agreements and standards covering the disposition of radioactive materials in the environment; and

3. should not add significantly to the ES&H burdens that would be expected to arise, in the absence of weapons-usable plutonium disposition, from appropriate management of the environmental legacy of past nuclear-weapons production and from appropriate management of the ES&H aspects of past and future nuclear-energy generation."[1]

NEPA—A partially complete commercial LWR will have an NRC-issued construction permit and, therefore, will also have in the public record an applicant-generated environmental report prepared under

10 CFR Parts 50.30(f), 51.45, and 51.50 and a final EIS on the construction permit prepared under 10 CFR Parts 51.90 and 51.91. Since the decision to use MOX fuel would be made prior to the issuance of an operating license, the licensee would include this change in a supplement to the environmental report required under 10 CFR Parts 50.30(f) and 51.53 for an operating license. The NRC would therefore address the effect of the change to MOX fuel in a supplement to the final EIS as prepared under 10 CFR Parts 51.92 and 51.95. Under 10 CFR Part 1021.400(c), although a major federal action is involved, use of a partially complete commercial PCLWR with an ongoing NRC NEPA process would not trigger consideration for additional NEPA action by DOE if the conditions specified in Appendix B to Subpart D of 10 CFR Part 1021 are satisfied by the NRC process.

Atomic Energy Act of 1954, as amended—At a minimum, a PCLWR will have a construction permit issued by the NRC under 10 CFR Part 50.50 and still valid under the conditions specified in 10 CFR Part 50.55. Any changes required to facility construction by the use of a MOX fuel cycle would be handled as an amendment to the construction permit under 10 CFR Part 50.90. It is assumed that work is in progress to complete and submit the application for the operating license under 10 CFR Parts 50.30(d), 50.33(f) and (g), and 50.34(b) and for associated material possession licenses as allowed under 10 CFR Part 50.31. The application for the operating license will include the final safety analysis report that would be updated from the preliminary safety analysis report to reflect the changes to MOX fuel. The application for the operating license would also contain the proposed technical specifications for the facility operating on MOX cores.

The NRC would review the applicant's combined applications for an operating license and material possession licenses for significant hazards considerations under the provisions of 10 CFR Part 50.92 and would issue as appropriate the operating license and other associated licenses under the provisions of 10 CFR Parts 50.50 , 50.52, 50.56, and 50.57 following both public hearings and a report by the Advisory Committee on Reactor Safeguards as required by 10 CFR Part 50.58. Associated licenses and authorizations required from the NRC include those for possession, handling, and storage of source material (10 CFR Part 40), SNM (10 CFR Part 70) plus access authorizations to SNM (10 CFR Part 11), by-product material (10 CFR Part 30), and spent fuel and high-level waste when stored in independent storage facilities (10 CFR Part 72). If fresh MOX fuel is to be brought to and stored at the reactor site prior to the issuance of the operating license, separate licenses and authorizations would have to be obtained in advance under the above-cited regulations for the possession of source material and SNM since the combined licenses under 10 CFR Parts 50.31 and 50.32 will not be in effect before the operating license. The application requirements and regulatory guidance differ for possession-only licenses.

RCRA—Plutonium disposition represents no new or special permitting situation with regard to compliance with RCRA for treatment or disposal of hazardous waste. For PCLWRs, RCRA permits will be in place for construction, and the conditions of the permit should not change due solely to the change to MOX fuel in future operations with reload cores. However, as a DOE program, all facets of the plutonium disposition mission are subject to the waste minimization/pollution prevention policies of the President and the Secretary of Energy with regard to the plans required of waste generators under Sect. 3002(b) of RCRA. Such a plan will be developed and implemented in cooperation with the owner or operator of the LWR, consistent with EPA guidelines published in the *Federal Register*.

Clean Air Act and Clean Water Act—No new or unusual permitting situations or special requirements are anticipated.

2.4.3.2 PCLWR Facility Licensing and Permitting Schedule

For this analysis, a licensing schedule developed by Fluor Daniel, Inc., for a PCLWR facility was followed. The licensing schedule is shown in Table 2.26 and Fig. 2.14.

To begin the licensing process, the application for transferring the construction permit (CP) to the new contractor is developed and filed with the NRC. The NRC reviews the application and approves the transfer of the CP. Once the CP is transferred, construction may resume on the reactor facility; work also begins on the application for the operating license (OL) and Environmental Report (ER). After the application for the OL and the ER, the NRC conducts technical reviews of the OL application and develops the EIS and the safety evaluation report (SER). The schedule includes a provision for a year-long full discovery period and a 1-year hearing and decision process by the Atomic Safety Licensing Board (ASLB). The requirements for these processes are subject to petitions for a hearing on specific issues. After a

Table 2.26. PCLWR facility licensing and permitting schedule summary

Task ID	Task name	Duration (months)	Start	Finish
1.	**NRC Licensing Process**	65	3/2001	7/2006
2.	DOE Prepares and Files Applications for Transfer of Construction Permit	3	3/2001	6/2001
3.	Public Notice of Application for Transfer of Construction Permit	1	6/2001	6/2001
4.	NRC Review of Construction Permit Transfer	6	7/2001	12/2001
5.	NRC Approves Construction Permit Transfer	1	12/2001	1/2002
6.	Licensee Prepares and Files OL Application	12	1/2002	1/2003
7.	Public Notice of Application for License			1/2003
8.	NRC Performs Technical Review for OL Application	12	1/2003	1/2004
9.	NRC Issues SER			1/2004
10.	Prehearing Conference	6	1/2003	7/2003
11.	Full Discovery	12	7/2003	7/2004
12.	Hearing by ASLB	12	7/2004	7/2005
13.	Decision Issued by ASLB	12	7/2005	7/2006
14.	NRC Issues Operating License			7/2006
15.	**NRC Environmental / NEPA Process**	24	1/2002	1/2004
16.	Licensee Prepares and Files OL ER	12	1/2002	1/2003
17.	NRC EIS Process for OL Application	12	1/2003	1/2004
18.	NRC Issues EIS			1/2004

decision is issued by the ASLB, the NRC grants the OL.

2.4.3.3 PCLWR Facility Operation-Funded Project Costs

Table 2.27 shows the major assumptions used to determine the reactor facility design, cost, and schedule.

This section will cover LCC categories 1–6 in the 24-category estimating format described in Appendix C of this report. These six categories constitute what is termed preoperational or OPC. OPC is the portion of the TPC (investment, or up-front cost) budgeted with operating dollars rather than congressional line item capital or TEC dollars.

Since this facility is likely to be government-owned and -funded, this distinction is important. OPC generally includes the majority of the preconstruction activities and many of the start-up activities carried on by the operating contractor prior to full-capacity operation of the facility and after construction is complete. As can be seen in Table 2.28, "NEPA licensing and permitting" is just one of several needed cost centers.

R&D costs ($35M) represent early estimates from the R&D plans submitted by the DOE national laboratories. The $96M for NEPA (post-1996 PEIS and new EIS activity), licensing, and permitting assume that the licensing body, NRC, will be reimbursed for the time required to process the license application. Much of the licensing and documentation supporting licensing for the two existing PWRs have already been accomplished under the application for the construction permit. Conceptual design is shown as zero since the reactor design is well beyond the conceptual design stage. The start-up activities funded are those undertaken by the contractor (which is likely to be a utility, perhaps the one that provided the two units to DOE-MD) that will operate the plant at full production. The costs in categories 1, 2, and 5, which are based on ORNL and utility estimates, have an 8.6% contingency added to them. A future uncertainty analysis may provide an estimate of the additional risk

ty license and permit schedule

cility assumptions

CB System 80 reactors
ers (IFBAs) used as a

DOB site)

al lifetim

tonium

tion for
ers of the 40-year life

ime to plan ca

2.4.4 PCLW

2.4.4.1 PCLWI

abricated

for each reactor reload,
completed fuel bundles
tion, the PCLWR facilit
capacity for one cycle re

Shipment Information-
mates of the number of s
the fresh MOX fuel from
to the PCLWR facility.

Maximum assemblies/package
Two PWR assemblies

meters fo

aign	E

S. Security layout for the fresh rage vault

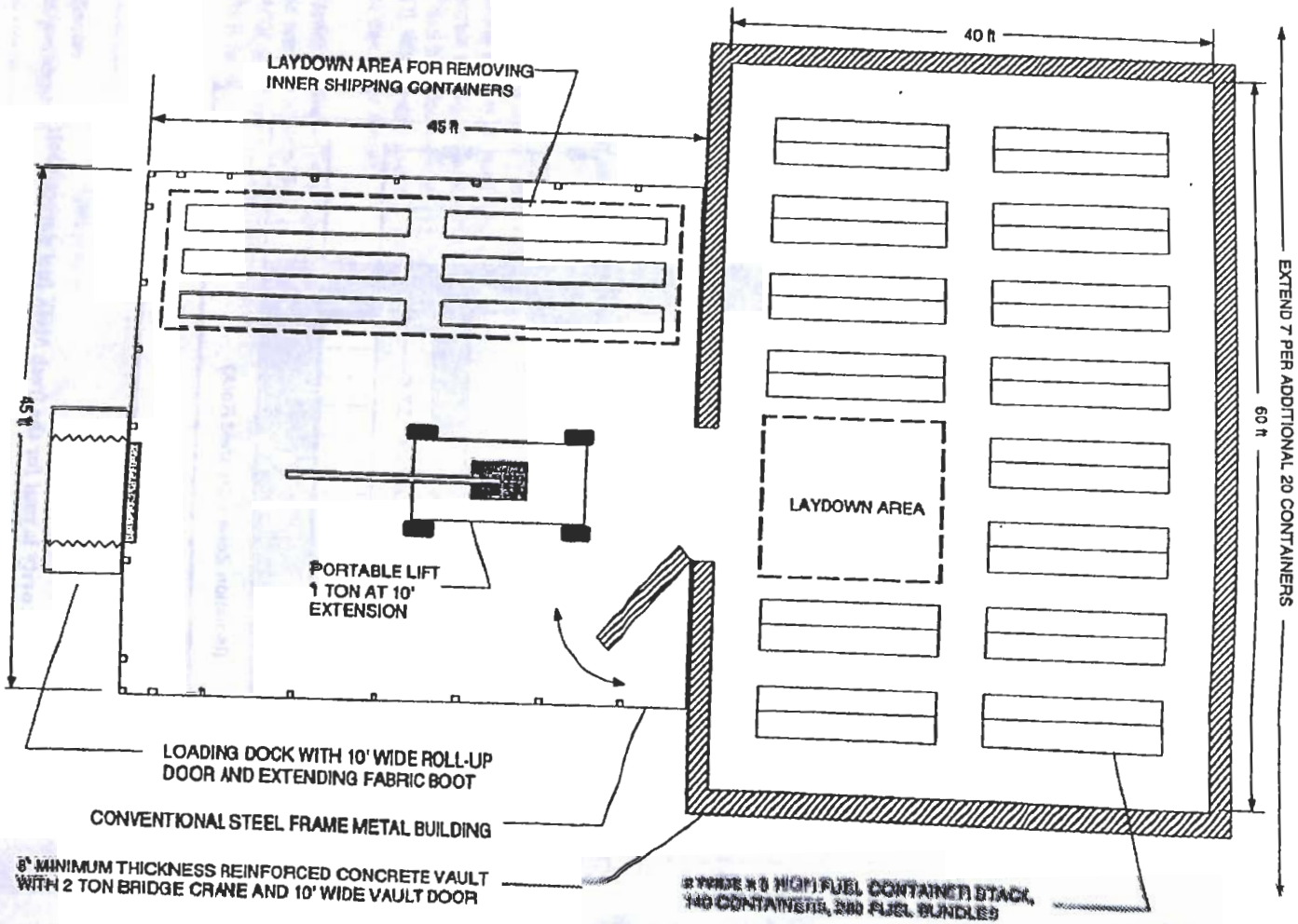

Figure 2.16. Fresh fuel storage vault layout

Fuel Storage Pool (Fresh Fuel)—Fuel shipping containers removed from the fuel storage vault would be lifted from the transport vehicle in the spent fuel storage building by the building crane. The shipping container TIDs are verified and the container identification information recorded. The shipping containers are then set upright and opened, and the fuel bundles are transferred to the cask loading area. Figure 2.13 illustrates the flow path for fresh fuel in the spent fuel storage building.

The assembly is then transferred to a specified storage rack position in the pool for interim storage until core loading begins.

Irradiation in Reactor—Transfer of fuel from the fuel storage pool to the reactor core is accomplished with the fuel transfer tube, as indicated in Fig. 2.13. Control of the tube is from an operator station at each end of the transfer tube.

The plutonium disposition rate and pertinent fuel cycle characteristics for one ABB-CE System 80 reactor are provided in Tables 2.30 and 2.31.

Each of two reactors begins MOX operation with a full core loading of 241 MOX fuel assemblies. The assemblies in the initial core contain a lighter loading of plutonium than the equilibrium bundles contain (13.17 kg vs 19.75 kg). At 1.79 years later, a half-core reload (121 assemblies) containing equilibrium type assemblies is loaded. The planning schedule calls for each MOX batch to remain in the reactor for two cycles, which is a period of 3.08 years (about 37 months). Each of two cycles is designed to have an irradiation period of 450 effective full power days (EFPD). The average fuel discharge exposure at the end of two cycles is 32,500 megawatt days per metric ton of heavy metal (MWd/MTHM).

Table 2.30. Plutonium disposition capacity and rate for one reactor (ABB-CE System 80)

Plutonium per assembly (kg, initial core) (kg, equilibrium core)	13.17 19.75
Plutonium dispositioned per year (MT) (average)	1.54
Plutonium dispositioned per cycle/reload (MT)	2.4

Table 2.31. ABB-CE System 80 MOX fuel cycle characteristics

Total cycle duration (d)	562.5
EFPD/per cycle (d)	450
Fuel shuffling/refueling duration (d)	112.5
Reload batch size (assemblies)	121/120
Full core size (assemblies)	241
Average discharge exposure (MWd/kgHM)	32.5

A total of 50 MT of plutonium in MOX fuel is loaded into the reactors over 15.66 years, according to the schedule shown in Table 2.32. A sequential loading of a total of 2692 MOX fuel assemblies is required to complete the mission. Subsequently, the last mission reload consists of 40 MOX assemblies along with 80 LEU assemblies. Four subsequent reloads (two per reactor) would be required to move all of the MOX fuel out of both reactors (the 18.74 year point, as seen in Table 2.32).

The reactor mission time is defined as the total time from the loading of the first MOX fuel assemblies until the first scheduled reactor reloading after the final set of MOX fuel assemblies has been irradiated sufficiently to meet the SFS. The schedule in Table 2.32 indicates a reactor mission time of 17.2 years.

Figure 2.2 shows the plutonium charged to both reactors over the 15.66-year loading period.

Figure 2.3 shows the MOX fuel assembly charging schedule for the mission.

Table 2.33 lists the entire process batch characteristics of each processing section shown in Fig. 2.11.

Fuel Storage Pool (Postirradiation)—Spent fuel assemblies removed from the reactor are stored underwater in the spent fuel pool while awaiting disposition. The spent fuel storage racks are located at the bottom of the pool at a depth sufficient to provide adequate radiation shielding. The racks are designed to protect the fuel assemblies from any impact damage and to withstand potential seismic loadings.

Part of the planning is that irradiated MOX assemblies would be allowed to decay on the reactor site for a period of 10 years. Thus, some storage of spent fuel external to the reactor building would probably be required before the plutonium disposition mission could be completed. If this is the case, then the final on-site transfer of MOX would be from the nuclear waste fund to the dry storage area, as indicated by the final step in the process diagram.

15.12	
17.20	
18.20	
18.74	

...n enrichment = 3.

...n per assembly = 13.17 kg initial load, 19.75 kg

...assembly = 439 kg initial load and equilibrium l

...ies = 241.

...atch size = 121 assemblies (equilibrium load).

HM throughput per year = 1... initial load

...time = 3.03 years.

...ll operation.

...ds are 120.5 fuel

...lements (

...t 15.66 y

Table 2.33. PCLWR facility batch process data

Process box	Process cycle data	Data (average)[a]
Fresh MOX fuel storage and handling	Plutonium throughput (kg) HM throughput (MT) Cycle time[b] (years)	4640 66.2 3.0
Irradiation in reactor	Plutonium throughput (kg) HM throughput (MT) Cycle time (years)	4640 66.2 3.0
Fuel storage pool (postirradiation)	Plutonium throughput (kg) HM throughput (MT) Cycle time (years)	2155 66.2 10.0
Dry storage of spent fuel	Plutonium throughput (kg) HM throughput (MT) Cycle time[c] (years)	2155 66.2 10.0

[a]Data given are per reactor.
[b]Fresh MOX fuel would reside in the fuel storage and handling facility for up to one 3-year fuel cycle.
[c]Assumes that dry storage of the spent fuel is needed for the ABB-CE System 80 reactors for at least 10 years.

Dry Spent Fuel Storage—The planning basis for facility layout associated with this study includes provisions for the dry spent fuel storage area. However, the relatively small costs associated with this storage were not included in the cost analyses.

This is a commercially available dry spent fuel management system that is currently licensed and in service at several U.S. reactor sites. The system employs ventilated reinforced concrete horizontal storage modules (HSMs) to store spent fuel assemblies that are sealed in stainless steel dry shielded canisters (DSCs). Each HSM has internal flow passages to promote natural convection cooling for the enclosed DSC. The DSC serves as the containment pressure boundary and provides a leak-tight inert atmosphere for the enclosed fuel assemblies.

This facility can be located adjacent to or inside the same guarded security area as is the new fuel storage vault.

2.4.4.3 PCLWR Facility Operations Schedule

After completion of the first unit in June 2009, when the MOX fuel fabrication facility lead time will be complete, this unit is loaded with the initial core load of MOX fuel, and additional physics tests are performed before the unit ascends to full power in September 2009. The second unit is loaded with fuel 1 year later. The MOX fuel loading and discharge schedule for the two reactors is shown in Table 2.32. After the spent fuel assemblies are discharged from the reactors, they are stored in the spent fuel storage pool for 10 years before being shipped to the HLW repository. The PCLWR facility operational schedule is shown in Table 2.34 and as a part of Sect. 2.4.6.

2.4.4.4 PCLWR Facility Operations Cost

PCLWR Facility Other LCCs—Operations costs for the PCLWR facility constitute more than just the cost of staffing and consumables for the 16 years of government-owned PCLWR facility operations; also included are waste handling, fees, capital upgrades, transportation, and oversight. These costs are reflected in categories 13–19 and 23 of the 24-category format shown on Table 2.35. These costs are often called recurring costs because the annual costs tend to remain almost constant over the plant lifetime for a given disposition rate (in this case 3.1 MT plutonium/year). The other LCC categories discussed in this section will be the electricity sales revenues and the revenue to the government from the sale of the reactor at the end of the 16-year plutonium disposition mission.

Operations Duration—The 16-year disposition duration represents the time from the first MOX fuel facility loading to the last MOX fuel loading for a given reactor. In reality, MOX fuel will still be in the

y's stat ged to

, fuel
lant h red by

ven in the
cause DOE/FMDP will cover only the co
OX irradiation and not the last 24 years c

ajor Capital Repl gory 15)—The
een used. This
for a reactor
f government
ocn as steam generators, would be re
he 24-year utility ownership period.

Waste Handling (category 16)—The major w
ost is for spent fuel dis

ish
009
028
025
009
024
26
28
38
11
8

apply to
LEU spent
ors operate
pacity
vernment
ts. It is
fuel imposes no
EU fuel and that the
sis for the
2.5.) LLW dis-
$1M/year.

—The $13M/year
ty represents an
er. It includes the
lity support of
s, and commer-

3)—It is very
to operate the
ity that formerly
is likely that the
ntive fee uc-
a fo
ith
ity
d

for the firs
ars. These
ge 16-year
o $14.7M/year. This business-negotiab

Financial analyses are based on 1212 MW(e
256 MW(e) which he System S

Table 2.35. Recurring and other LCCs for a government-owned PCLWR facility

Category	Cost category description	Cost [Lump sum (1996 $M)]	Cost [Annual (1996 $M/year)]	Basis
				Each reactor is 1212 MW(e) at 80% capacity factor
	Other LCCs for 2 units: campaign length = 16 years			
13	O&M staffing	976	61.0	
	Staff size (headcount) 1000 persons for two-unit facility			Utility assumes $61,000 per FTE
14	Consumables (including utilities) (16 years)	88	5.5	Utility estimates
15	Major capital replacements or upgrades (16 years)	272	17.0	Utility estimates
16	Waste handling and disposal (16 years)			
	High-level radwaste/spent fuel	272	17.0	Based on 1-mill/kWh fee (see Sect. 2.5) and 16-year power production
	TRU waste disposal			Negligible cost
	MW disposal			Negligible cost
	RCRA waste disposal			Negligible cost
	Low-level radwaste disposal	14	0.9	Utility estimates
17	Oversight (16 year)	208	13.0	$13M/year includes commercial insurance
18	M&O contractor fees (16 years)*	235	14.7	Utility M&O (same fee structure as existing reactor)
19	PILT to local communities (16 years)	400	25.0	$25M/year based on - government utility estimate
	TOTAL REACTOR RECURRING COSTS	2465	154.1	
20	D&D (sinking fund approach)	152	9.5	16 years of $9.5M/year sinking fund (eventual D&D is $600M)
21a-1	Revenues (16 years)	–7888	–493.0	Future southeastern revenues per ORNL and Putnam, Hayes, and Bartlett (average 29 mills/kWh)
21a-2	Revenue sharing with former utility owner of reactors at 2.7 mills/kWh*	734	45.9	Utility estimate
21b	Revenue from sale of reactors to utility at end of mission*	–2586	N/A	Net present value of last 24 years of profits discounted at 9% real discount rate
22	Payment or fee to privately owned facilities	0	N/A	
23	Transportation of plutonium forms to facility: ORNL T&PD group (16 years)	18	1.1	Transportation of bundles from southeastern MOX fuel fabrication facility to southeastern utility site
24	Storage of plutonium at existing 94-1 site facility	N/A	N/A	N/A
	TOTAL OTHER LCC	–7105		

*Business-related cost categories not considered in Table 4-2 of the TSR. Values shown here are based on discussions with a utility.

was not included in the cost analysis found in Table 4-2 of the TSR.

PILT (category 19)—Because public utilities or facilities do not pay state or local property taxes, local governments are often reimbursed for road usage and school use by payments-in-lieu-of-taxes (PILT). The $25M/year used here is representative of a two-unit plant owned by a federal utility. It is assumed that if DOE/FMDP owns a power-producing reactor, a similar PILT structure will apply.

D&D (category 20)—The $600M needed at the end of the reactors' 40-year lives is assumed funded by a sinking fund paying 7% real interest. The $9.5M/year in principal needed to fund this will be paid by DOE/MD for 16 years for a total of $152M in D&D cost. The remainder of the principal needed will be paid by the new owner in years 17–40. The principal and interest in the D&D escrow fund would be transferred to the new owner upon sale of the reactor (see category 22 explanation).

Electric Power Revenues (category 21a-1)—It is assumed that electricity revenues will accrue to the government for the first 16 years of the reactors' lives. Each unit is assumed to have a net generation capacity of 1212 MW(e) and operate at 80% capacity factor. Because of deregulation and the competitiveness of natural gas, the long-term unescalated revenue rate is assumed to be 29 mills/kWh for the southeastern region and is based on utility projections and fits well with recent projections made by Putnam, Hayes, and Bartlett (PHB) for tritium production reactors in the Southeast.

Electric Sales Revenue Sharing (category 21a-2)—As a condition of transfer to DOE-FMDP, it is assumed that the transferring utility demands a share of the 29 mills/kWh revenue during the 16 years of DOE ownership. A share of 2.7 mills/kWh is assumed to go to the utility and 26.3 mills/kWh to DOE-MD. This sharing helps the utility recover some of its sunk costs.

Revenue from Sale of Reactor at End of Mission (category 21-b)—In this document an attempt is made to provide some reasonable basis for a salvage value based on sale of the reactors to a private utility in year 17. If the completion cost for the PCLWR facility is assumed to be completely absorbed by the government, the PCLWR facility can produce electricity very profitably. The profit is the 29 mills/kWh revenue minus the cost of operations, capital replacements, LEU fuel, and D&D fund. Based on the values above, the profit could amount to $266M/year for 24-year the new owner. If the 24-year profit stream is discounted at a 9% real discount rate, typical of a private sector required rate of return, the stream has a net present value of $2.6 billion (B). For this analysis, the $2.6B is assumed to be the salvage value (revenue) to the government in the year after the plutonium disposition mission ends. Because salvage value is a business-negotiable issue, a zero salvage value is assumed for the PCLWR case in the TSR.

Payments or fees to privately owned facilities (category 22)—Since the reactors and MOX fuel fabrication facility are both government-owned, this category does not apply.

Transportation (category 23)—The annual transportation cost of $1.1M/year was calculated by the ORNL Transportation and Packaging Research Group. The cost represents transportation of fabricated MOX fuel bundles from the MOX fuel fabrication facility at the SRS to the reactors. The transportation of spent fuel wastes from the reactors to the geologic repository site is included in the 1-mill/kWh fee (category 16).

Storage (category 24)—This plutonium-storage category does not apply to the reactors.

2.4.5 PCLWR Facility Conversion to LEU and Private Ownership

2.4.5.1 PCLWR Facility Conversion to LEU Fuel Schedule

The last MOX fuel core load (for unit 1) contains 40 MOX fuel assemblies; the other 80 fuel assemblies are LEU fuel assemblies. Subsequent core loads are all LEU fuel.

2.4.5.2 PCLWR Facility Conversion to LEU Fuel Cost

Since the reactors are assumed to be sold to a utility at the end of the plutonium disposition mission, there will not be any conversion cost to LEU fuel on the part of DOE-FMDP.

2.4.6 PCLWR Facility Schedule Summary

The overall PCLWR facility implementation schedule is summarized in Table 2.36 and shown in Fig. 2.17. This facility schedule is also shown in the discussion of the overall alternative schedule in Chap. 3. This

ummary

tor
core, they are not or ment
building, but their i ifi-
dia-
low
ft.
torage pool
t and overt theft risk because of the
ioned. If the fuel assemblie
uel storage, they still have
when placed in the DSCs, a

2.4.7 I

Summar
hows a s

n at 1 m), then the material could
come Category IID SNM. They still, however, are
t a particularly high theft target because of the
xternal barriers in place.

ompare
r the plutonium c

rovides environmental conditions mate-
d S&S used to evaluate proliferation risks.

4.3 PCLWR Facility S&S Summary

ssible Diversion, Theft, or Proliferation Risk

Environmental Conditions- Fuel assemblies will remain in the reactor core for two cycles of 1.5 years each. This does not include time for receipt of the fuel,
f el stor-
a could
r gura-
ti build-
i e mov-
i pool

of fresh MOX fuel is low. The large mass and dimensions of the fuel assembly require the use of special handling equipment that provides increased delay

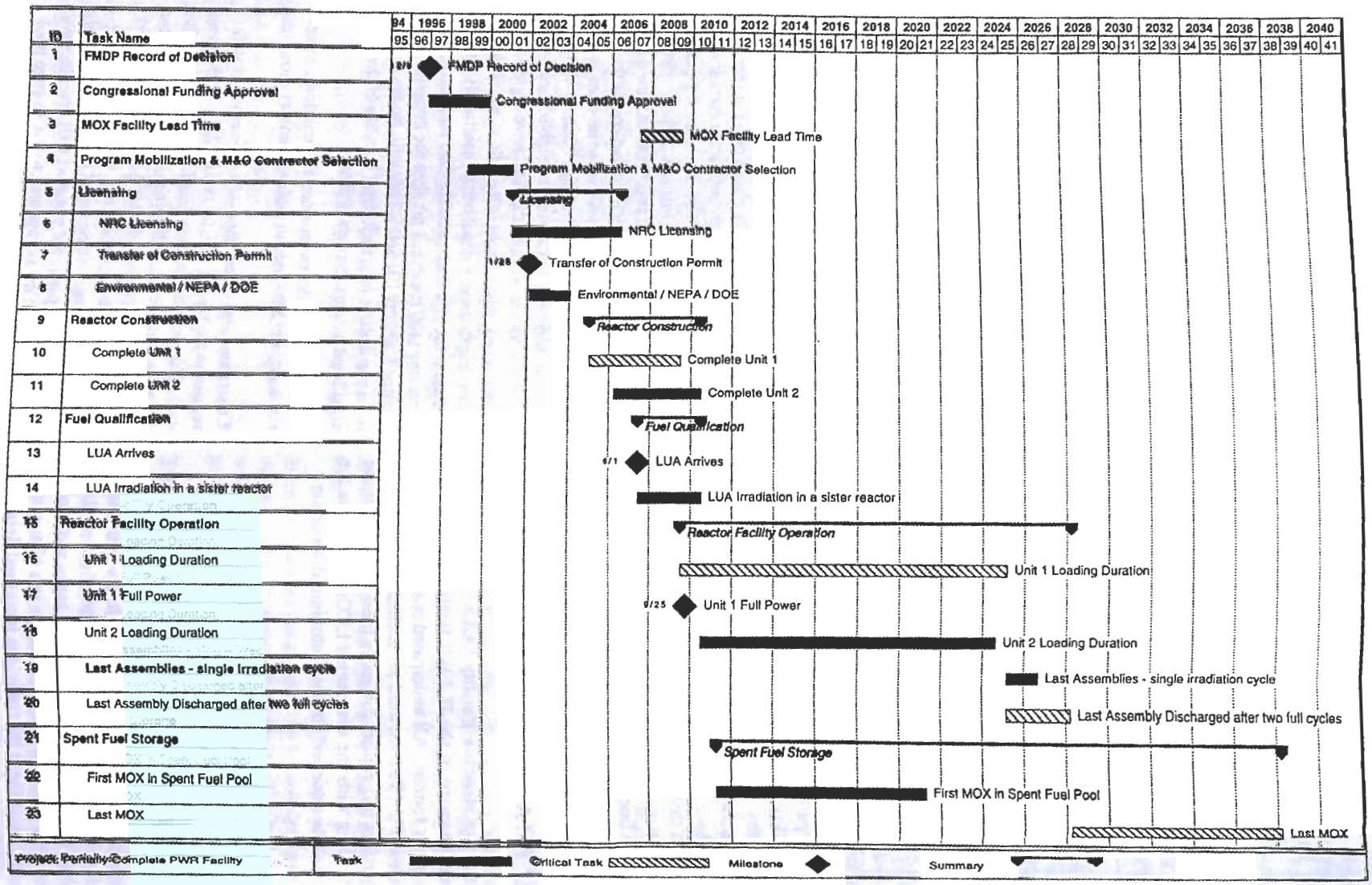

Figure 2.17. PCLWR facility schedule summary

Table 2.37. Summary of LCCs for PCLWR facility

Category	PCLWR end-to-end alternative	Cost [lump sum ($M)]
	Reactor facility: 2-ABB/CE SYS 80/fuel from government MOX	
	Preoperational or OPC up-front costs:	
1	R&D	35
2	NEPA, licensing, permitting	96
3	Conceptual design	0
4	QA, site qualification, S&S	0
5	Postconstruction start-up	744
6	Risk contingency (derived from uncertainty analysis)	75
	TOTAL OPC	950
	Capital or TEC up-front costs	
7	Title I, II, III engineering, design, and inspection	346
8	Direct and indirect construction/modification	633
9	Construction management (percentage of category 8)	0
10	Initial spares (technology dependent)	108
11	Allowance for indeterminates (AFI) (percentage of categories 7–10)	345
12	Risk contingency (derived from uncertainty analysis)	0
	TOTAL TEC	1432
	TOTAL UP-FRONT COST (TPC)	2382
	Other LCCs: (16-year MOX campaign)	
13	O&M staffing	
	Staff size (headcount) 1000 persons	
	Annual staffing cost	976
14	Consumables including utilities	88
15	Major capital replacements or upgrades	272
16	Waste handling and disposal	
	High-level radwaste/spent fuel (ORNL to apply 1 mill/kWh fee)	272
	Low-level radwaste	14
17	Oversight	208
18	M&O contractor fees	235
19	PILT to local communities	400
20	D&D (sinking fund)	152
21a-1	Revenues (if applicable)	–7888
21a-2	Revenue sharing	734
21b	Reactor saleback revenue	–2586
22	Government payment or fee to private-owned facility	0
23	Transportation of plutonium forms to facility ($/year)	18
24	Storage of plutonium at existing 94-1 site facility	N/A
	TOTAL OTHER LCC	–7105
	GRAND TOTAL ALL LCC	–$4723

Table 2.38. Nonproliferation and S&S risk assessment for the PCLWR facility

Environment								
Facility	**Activity**	**Duration (years)**	**Throughput plutonium**	**Waste streams**	**Maximum inventory of plutonium**	**Intrasite transport**	**Number of processing steps**	**Barriers**
Reactor (data for one reactor, two reactors used in alternative)		562 days (cycle)	2.4 MT/cycle 1.544 MT/year		2.4 MT		1	PA VA/MAAs
	Fresh MOX fuel storage vault	1–2 months 1.54 years (cycle)	13.166 kg/assemblies (initial) 19.75 kg/assemblies (equilibrium)	No	96 shipping containers 19.75 kg/assembly	Yes-transfer to reactor building via vehicle, SST unload		Separate stand-alone ex-reactor building, TIDs
	Fuel storage pool	0.05 months	2380 kg/per batch	No		No		TIDs
	Reactor (0.72 plutonium burnup)	1.54 years cycle time (each batch two cycles or 37 months)	2380 kg/batch, 241 assemblies per core (reload 120–121 assemblies)	No	241 assemblies (full core) 3713 kg (first core)	Yes refuel via transfer tube	1	Containment building
	Fuel storage pool (postirradiated)	120 months	1850 kg/batch	No	12.1 MT	No		Stored under water in the fuel storage basin
	Dry spent fuel storage	NA		No		Yes (to dry storage via vehicle)		PA
Transport	Reactor to repository							

Note: PA—protected area.
MAA—material access area.
LA—limited area.

Table 2.38. Nonproliferation and S&S risk assessment for the PCLWR facility (cont.)

Material form										
Facility	Activity	SNM input	SNM output	Quantity	Concentration of plutonium/ HM	SNM category*	Item mass/ dimensions	Radiation barrier	Chemical composition	Isotopics
Reactor					No other FM	DUU DUI				For CE-80
	Fresh MOX fuel storage vault	MOX fuel assemblies (fresh)	MOX fuel assemblies (fresh)	13.17 kg/ assembly		IC	664 kg 3.81 × 0.2 m	No	MOX	0.935 ^{239}Pu 0.065 ^{240}Pu per assembly
	Fuel storage pool	MOX fuel assemblies (fresh)	MOX fuel assemblies (fresh)			IC		No	MOX	
	Reactor	MOX fuel assemblies (fresh)	MOX fuel assemblies (irradiated)			IC (in) IVE (out)		No (in) Yes (out)	MOX	at discharge 0.609 ^{239}Pu 0.234 ^{240}Pu 0.137 ^{241}Pu 0.021 ^{242}Pu
	Fuel storage pool (irradiated)	MOX fuel assemblies (irradiated)	MOX fuel assemblies (irradiated)			IVE or IID if moderately irradiated		Yes		At 10 years 0.641 ^{239}Pu 0.247 ^{240}Pu 0.089 ^{241}Pu 0.022 ^{242}Pu
	Dry spent fuel storage	MOX fuel assemblies (irradiated)	MOX fuel assemblies (irradiated)			IVE or IID if moderately irradiated		Yes		
Transport	Reactor to repository									

*Table 2.12 provides attractiveness levels.

Note: SNM—special nuclear material.
DUU—direct-use unirradiated.
DUI—direct-use irradiated.

Table 2.38. Nonproliferation and S&S risk assessment for the PCLWR facility (cont.)

S&S Facility	Activity	No. of MBAs	Type accounting system	Nuclear measurement method	Classified material	Physically accessible	Access	Special handling equipment
Reactor	es	5	100% Item	Neutron, gamma				
	MOX o orage vault		Item	2% (fresh—domestic) 3% (fresh—international)	No proprietary	No	Hands-on remote	Yes
	Fuel storage pool		Item		No	No	Remote	Yes, crane, fuel preparation machine
	Reactor o		Item		No	No		Yes, refueling platform
	Fuel storage pool		Item	6% (irradiated—domestic) 10% (irradiated—international)	No	No	Remote	
	Dry spent fuel storage		Item		No	No	Remote	
Transport	Reactor to ry							

balance areas.

for loading into the reactor core. No fissile material waste streams are generated. The fuel assemblies will remain in the reactor core for two fuel cycles. Spent fuel will be in the storage pool for 10 years and then, if dry storage is necessary, placed in DSCs that are stored in HSMs. Although the inventory of MOX fuel may be large and exceed Category I quantities for fresh MOX fuel and the throughput may be large, the number of process steps and the complexity of the operations concerning the fuel are relatively low. The material includes discrete items that are at the reactor site for long periods at single locations (e.g., reactor core, spent fuel pool, dry storage area).

Material Form—The fresh MOX fuel is Category IC SNM; once it is irradiated and becomes self-protecting, it becomes Category IVE SNM. This provides a very high radiological barrier. In addition, the assemblies are quite massive and, from the standpoint of plutonium isotopics, become less desirable. Because of the presence of highly radioactive fissile products, chemical processing to convert the spent fuel into a weapons-usable form is much more difficult. The radiological and isotopic attributes are time-dependent, and eventually the material would no longer be self-protecting.

S&S Assurance—Item accountancy is used to account for fuel assemblies. Markings and seals on the assemblies can also be used to verify material. Special handling equipment is required to move these assemblies; once they have been irradiated, remote handling is necessary. The material in general is not very accessible. NDA measurements are possible for spent fuel, but at the present time, NDA measurements are used to confirm the presence of spent fuel rather than accurately account for the material. When the initial material information and the records from the reactor facility are used, the quantity of material can be estimated.

Potential Risks to Diversion—The fresh MOX fuel assemblies are relatively easy to account for using item accountancy. Along with containment and surveillance measures, the likelihood of covert diversion is medium. Both the low concentration of the plutonium in the fuel, plutonium isotopics, and the high radiological barrier make diversion more difficult. Once the fuel has been irradiated, its attractiveness for reuse is significantly reduced, and the threat of diversion is low.

Difficulty of Diversion, Retrieval, Extraction, and Reuse—Fresh fuel assemblies pose a moderate risk to diversion and reuse. Once the fuel has been irradiated, the radiological barrier makes handling the material more difficult, and thus the risk of diversion and reuse is low. Both the fresh and irradiated MOX fuel are maintained at single locations (e.g., reactor core and spent fuel pool) for long periods of time, which makes diversion more difficult.

Assurance of Detection of Retrieval and Extraction—The fresh fuel would have the same moderate diversion risk as at the end of the MOX fuel fabrication facility. Once the fuel has been irradiated, it will require special handling equipment, and the intrinsic radiological barrier will reduce the risk of diversion to low. Strict accountancy along with containment and surveillance will be maintained. The massive size and weight, as well as the radiological characteristics of the spent fuel, provide high assurance of detection of retrieval and extraction.

2.4.9 PCLWR Facility Technical Viability

Five factors were considered to develop a qualitative assessment of the technical viability of a concept: a definition of the technological maturity of a process, the specification of the technical unknowns for the process and the technical risk associated with the application of the process; the R&D needs of the process; the condition, capacity, and reliability of infrastructure; and the regulatory and licensing requirements. Each of these items, except infrastructure, will be addressed in the following sections.

Technological Maturity—Judging the maturity of the technologies employed in plutonium disposition facilities requires an assessment of the current level of development of each stage of the fuel cycle. Technologies can be categorized as being at the conceptual design stage, the laboratory or bench-scale testing stage (demonstrating scientific feasibility), the prototype stage (demonstrating engineering feasibility), or the industrialization/commercialization stage. Even if a significant domestic development base does not exist, a foreign experience base may be available.

Given that technology is defined as a technical method of achieving a practical purpose, the technologies present in the reactor facility are as follows:

1. methods of fuel receipt, inspection, and accountability;
2. method of fresh fuel storage;
3. method of fresh fuel transfer to reactor and loading to core;

4. reactor operation to consume plutonium;
5. BOP operation not related to fuel handling;
6. method of unloading core and spent fuel transfer;
7. method of wet, spent fuel storage;
8. method of transfer from wet to dry spent fuel storage;
9. method of dry spent fuel storage; and
10. method of fuel transfer to spent fuel cask.

The ten identified technologies correspond to physical operations involved in the placement of MOX fuel in differing physical areas of the plant. Assessment of the development level of these technologies requires evaluations based on one or more of the following engineering analyses:

1. Steady-state analyses
   i. Thermal hydraulics
   ii. Reactor physics
   iii. Reactivity control
   iv. Fuel chemistry and thermodynamics
   v. Fuel structural mechanics
2. Transient analyses
   i. Accident scenarios
   ii. Reactor response (including 1.i.–v.)

Additional input related to the development level can be obtained from known R&D needs itemized later in this section.

1. Fuel receipt, inspection, and accountability—Fuel receipt will occur at fresh fuel storage, but inspection would occur inside the reactor. Existing, in-reactor fuel inspection stations should be adequate for MOX fuel. Commenting on a BWR design, General Electric states that "there will be some new issues arising from the need to handle and safeguard the fresh MOX fuel. ...Full compliance with International Atomic Energy Agency (IAEA) standards and procedures would not require new technology based on their similarity to current U.S. standards."

   Because only additional analyses are required (no additional experimental data needed) and because experience in foreign reactors would lead one to believe that the analyzed operation would be successful and licensable, these technologies are judged to be at the *commercial* stage even though no MOX fuel operations are currently being conducted in the United States.

2. Method of fresh fuel storage—Upon receipt at the reactor facility, the internal shipping container would be removed from the external shipping container and stored in a dry storage vault. The construction of the new fuel storage building will require an amendment to the plant NRC license. However, there are no technical issues that would be expected to preclude timely approval. Validation of criticality safety analyses is required but could probably be accomplished with the provision of existing data from foreign reactors. This technology is judged to be at the *commercial* stage of development.

3. Method of fresh fuel transfer to reactor and loading to core—A combination of motorized methods is used to move fresh fuel from the fresh fuel storage building to the reactor building. Overhead cranes and underwater transfers are used to move fresh fuel from receipt at the reactor building and load to the reactor. No complications are expected due to MOX fuel. The technology is judged to be at the *prototypic* stage of development because of lack of detail regarding transfer from the fresh fuel storage building to the reactor.

4. Reactor operation to consume plutonium—The issues for the PCLWR are expected to be the same as those for the other water reactor options. In particular, General Electric states, "[n]o new technology needs are identified for...reactors," yet also states that "[I]rradiation and analysis of MOX fuel rods and Lead Use Assemblies (LUAs) is planned to qualify the rod fabrication process and to further benchmark the nuclear design codes." (See research and development itemized needs.) Furthermore, General Electric states "the scope and timing of this project did not allow a complete safety analysis to the level of detail that would be required for an NRC submittal. In addition, ... the NRC's decision on certain issues cannot be predetermined. Enough work was done...to provide reasonable assurance that there are no major obstacles to licensing both the fuel and the plant...but there may be some minor performance differences...for the full MOX design that will result in Technical Specification changes and which therefore result in plant license revisions." Westinghouse has noted a need to revise the control rod design for full mixed oxide cores.

Based on vendor comments, the identified R&D needs, the existence of European reactors operating on ~1/3 core MOX, and the programmatic goal of operating a full core of MOX fuel, this technology is judged to be at the *prototypic* stage of development.

5. BOP operation not related to fuel handling—This technology is judged to be at the *commercial* stage of development. Note that R&D items 9 and 10 call for additional analyses potentially related to the BOP design.

6. Method of unloading core and spent fuel transfer—The method is the same as for transfer of fresh fuel to the reactor (overhead crane). Spent fuel has heat transfer and shielding considerations not present with fresh fuel, but the differences from the existing fuel cycle are believed insignificant. Consequently, the technology is at the *commercial* stage of development.

7. Method of wet spent fuel storage—Spent fuel is stored in water-filled pools where the water provides both cooling and shielding. Analyses will be required to certify existing spent fuel storage pools, but needed experimental data exist and considerable foreign experience is available. This technology is judged to be at the *commercial* stage of development.

8. Method of transfer from wet to dry spent fuel storage—Large canisters are assumed to be used for dry spent fuel storage. The method of transfer from wet storage to shipping cask has been demonstrated and is believed to be independent of the type of cask. Consequently, this technology is judged to be at the *commercial* stage of development.

9. Method of dry spent fuel storage—The method of dry, spent fuel storage is assumed to be storage in some type of large canister. This method is judged to be *commercial*, although some additional safety analyses will be required.

10. Method of fuel transfer to spent fuel cask—The method of transfer from wet storage to shipping cask has been demonstrated and is believed to be independent of the type of cask chosen for shipment of the fuel. If dry storage is employed, technical viability will have been demonstrated. This technology is judged to be at the *commercial* stage of development.

Technical Risks—Certain technologies have associated technical unknowns. Generally, these unknowns are parameters whose values are known for certain "reference" fuel cycles, but this behavior for MOX fuel cycles is unknown or poorly known. Consequently, risks are associated with the application of the technologies based on these parameters.

Assuming that implementation of any activity not currently operational involves some minimal degree of risk (technical, financial, regulatory, and/or schedule). Risk is herein quantified as minimal, low, medium, or high for each of the technologies. All of those technologies determined to be commercialized either domestically or internationally have only minimal implementation risks as discussed in the following paragraphs:

1. Methods of fuel receipt, inspection, and accountability—These technologies have been determined to be commercialized because they are currently implemented domestically with LEU fuels and internationally with MOX fuels. However, domestic implementation of these technologies with MOX fuel involves some degree of risk. Based on the state of the technology, the risks involved are minimal.

2. Method of fresh fuel storage—Although some differences exist between handling MOX fuel and LEU fuel, none of these differences is expected to introduce excessive risk. This technology is commercialized domestically with LEU fuels and internationally with MOX fuels. The technical risk associated with adopting the existing technologies to domestic MOX fresh fuel storage is minimal. However, a license amendment will be required for the new MOX fresh fuel storage facility. Potentially important schedule and cost risks are introduced by this requirement.

3. Method of fresh fuel transfer to reactor and loading to core—This technology is fully developed. Risk associated with this technology is minimal.

4. Reactor operation to consume plutonium—MOX fuel has been irradiated both domestically and internationally. However, the irradiation experience base does not cover all of the issues associated with MOX burning as part of this plutonium disposition mission. For this reason, the technology has been judged to be at the prototypic stage of development. The outstanding issues are inclusion of burnable neutron absorber into the MOX fuel, presence of americium in the MOX fuel, use of weapons-grade rather than reactor-grade plutonium, severe accident performance of the fuel,

and use of a full-MOX core rather than ~1/3 core. None of these issues are judged to be impossible to overcome. The best evidence available suggests that the MOX performance should equal or exceed the performance of similar LEU fuel.

Burnable neutron absorber has never been incorporated into MOX fuel. However, modern MOX fuels are very homogeneous such that the plutonium exists in very small particles surrounded by an LEU matrix. By adding the burnable neutron absorber during the micronization, it should likewise become homogeneously distributed throughout the fuel matrix. On average, the burnable neutron absorber particles will "see" a surrounding uranium matrix, a similar chemical condition as currently exists in certain LWR-LEU fuels. This behavior is expected to be verified as part of the fuel development and demonstration program.

Americium, an impurity present in weapons-grade MOX, forms from radioactive decay of ^{241}Pu. Its presence increases the shielding requirements on the MOX fuel. However, weapons-grade plutonium (by definition) includes low percentages of the higher plutonium isotopes, including ^{241}Pu. The resulting americium content is actually lower than that encountered in commercial MOX fuel that has been stored for a few years since reprocessing.

Most of the MOX fuel that has been irradiated used reactor-grade MOX, which has a lower fissile content than weapons-grade. The variation in ^{240}Pu content is not expected to cause difficulties because fertile materials, such as ^{238}U, or burnable neutron absorbers could be used to adjust reactivity.

The severe accident performance of MOX fuel has not been experimentally validated. However, at the end of life, LEU fuel contains an appreciable quantity of plutonium. For this reason and because the homogeneity of modern fuels causes them to behave similarly to LEU fuels in most respects, the severe accident behavior of MOX fuel is expected to be within the uncertainty bands of the LEU behavior. Demonstration tests may be required, but the tests can be performed on sections of LTA fuel rods postirradiation.

The final issue is the use of a full-MOX core rather than the ~1/3 core used in most plutonium recycling schemes. By restricting the MOX fraction in the core to ~1/3, the core parameters (as delayed neutron fraction and average neut energy spectrum) remain similar to those fou an LEU-fueled core. By increasing to a full-M core (dependent on the plutonium concentrati in the MOX), these parameters change, and s changes in reactor design (such as control rod changes and/or additions) may be required. Fu ther studies of the partially complete reactor m lead to limits on the plutonium concentration s that a requirement for these reactor changes ca be avoided.

Although a full-MOX LWR core has not been operated, no performance problems are predicte Extensive testing will be performed prior to sta up with increased MOX core fraction to assure that the neutronic behavior is as predicted.

Thus, while issues associated with reactor opera tion do exist, none of the issues presented are judged to add significant risk to the overall mission success. Even if the performance is not as expected, engineering solutions can be found for the difficulties. The overall risk associated with reactor operation to irradiate plutonium is judged to be low.

5. BOP operation not related to fuel handling—Although some additional analysis may be required to assess the potential impacts of MOX fuel use on the BOP especially during off-normal situations, the impacts are not expected to be large. Engineering fixes can be performed to adjust the plant behavior as required. The risk associated with BOP operation is therefore judged to be minimal.
6. Method of unloading core and spent fuel transfer.
7. Method of wet spent fuel storage.
8. Method of transfer from wet to dry spent fuel storage.
9. Method of dry spent fuel storage.
10. Method of fuel transfer to spent fuel cask.

Because spent MOX fuel is very similar to spent LEU fuel, the technologies associated with spent fuel operations are judged to be at the commercial stage of development. All of these spent fuel technologies have been demonstrated domestically for LEU fuel and internationally for both LEU and MOX fuels. The risks associated with implementation of these technologies are therefore judged to be minimal.

R&D Needs—Ten technologies have been evaluated for the reactor facility. The R&D issues for each of those technologies are discussed in the following paragraphs:

1. Methods of fuel receipt, inspection, and accountability—These technologies are commercialized domestically for LEU fuels and internationally for MOX fuels. Domestic implementation will require some engineering development to adapt the domestic LEU experience and/or the international MOX experience.

2. Method of fresh fuel storage—Some differences in the handling of fresh MOX fuel vs LEU fuel exist. A license amendment must be obtained for the new MOX fresh fuel storage facility. Adaptation of current LEU fuel and plutonium storage technology should prove adequate, such that only minimal technology development is required. Most of the effort associated with this technology will be in support of the license amendment and is not part of technology development or R&D.

3. Method of fresh fuel transfer to reactor and loading to core—These technologies are commercialized domestically for LEU fuels and internationally for MOX fuels. Domestic implementation will require some engineering development to adapt the domestic LEU experience and/or the international MOX experience. This development is judged to be minor because adaptations from current practice should prove adequate.

4. Reactor operation to consume plutonium—As discussed in the two previous sections, some confirmatory testing will be required to qualify MOX fuel, and some development may prove necessary depending on how the fuel is manufactured. The outstanding issues are the presence of americium in the MOX fuel, use of weapons-grade rather than reactor-grade plutonium, inclusion of burnable neutron absorber into the MOX fuel, severe accident performance of the fuel, and use of a full-MOX core rather than ~1/3 core. Also, some engineering analyses and development will be required to quantify and adjust for changes in the reactor operation resulting from MOX fuel use.

   Some engineering work will be required to assess and quantify the changes resulting from use of weapons-grade rather than reactor-grade MOX fuel. This will include code validation.

   Burnable neutron absorber has never been incorporated into MOX fuel before. Test programs have been discussed previously. Also, the severe accident performance of MOX fuel needs to be verified. Both of these needs can be fulfilled through a fuel development and demonstration program.

   Use of a full-MOX core rather than the ~1/3 core used in most plutonium recycling schemes also introduces uncertainty. The neutronic and control effects of going to a full-MOX core need to be determined. Persuading analysis can provide a good estimate of the effects, and the results will be verified by testing performed prior to start-up with each increased MOX core fraction.

   A number of engineering development and R&D tasks have been identified to deal with reactor operation on MOX, with the majority focusing on fuel development activities. These include the following:

   - Validation of neutronics computer codes and NRC confirmatory review;
   - Validation of neutronics codes incorporating models for burnable neutron absorbers;
   - Conducting of experiments to support analysis in above;
   - LTA for PWRs;
   - Development/update fuel mechanical performance computer programs, develop independent code for NRC;
   - Prepare severe accident database for NRC;
   - Update to Safety Analysis Report;
   - Perform fuel management calculations for full MOX core for submission to NRC;
   - Perform severe accident sequence analyses;
   - Analyses for fresh fuel staging, storage, security, and shielding considerations;
   - Fuel thermal analysis.

5. BOP operation not related to fuel handling—Analysis will be required to assess the potential impacts of MOX fuel use on the BOP, especially during off-normal situations. If problems are identified, engineering solutions will be

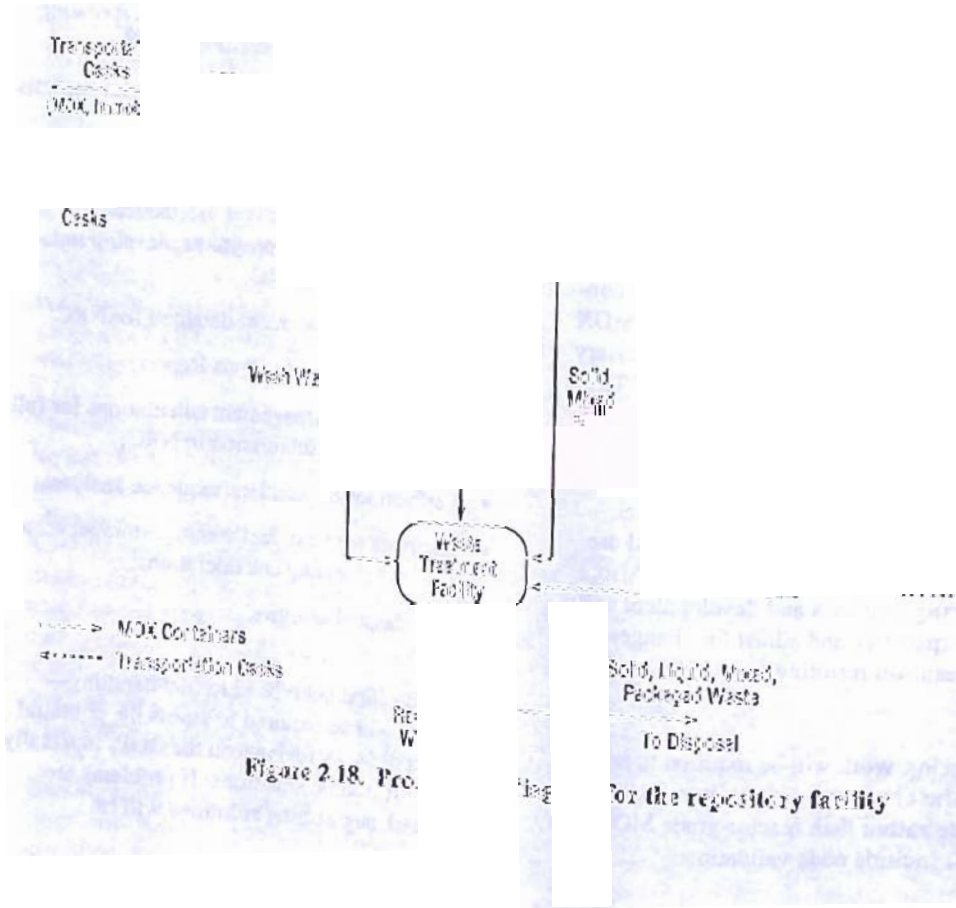

Figure 2.18. Pro

for the repository facility

enter a waste handling building through air locks where decontamination takes place. Wash water from the decontamination operation will be sent to a waste treatment facility. In a waste handling building, sealed canisters containing MOX spent fuel are removed from the transportation casks in a hot cell. The canisters are transferred to disposal containers, and lids are welded in place. The disposal container will be decontaminated, if necessary, and transferred to a shielded storage vault to await placement into the underground transfer cask. The transfer cask containing the disposal container will be coupled to a transporter and moved underground for final emplacement.

The layouts for a repository surface facility and subsurface facility are shown in Figs. 2.19 and 2.20, respectively.

2.5.2 HLW Repository Design and Construction

2.5.2.1 HLW Repository Design and Construction Schedule

For this analysis, it has been assumed that the construction of the HLW repository will begin in March 2005 and will require 5.5 years to complete.

2.5.2.2 HLW Repository Design and Construction Cost

The DOE/FMDP is not responsible for any design and construction costs associated with the HLW repository. The 1 mill/kWh fee assists in recovering DOE/Office of Civilian Radioactive Waste Management (OCRWM) costs.

2.5.3 HLW Repository Licensing

2.5.3.1 HLW Repository Licensing Overview

A path forward exists for the repository licensing process in accordance with NRC regulations such as 10 Part 60 and Part 2. Disposal of MOX spent fuel may require an amendment to the repository license, with the applicable NEPA process.

2.5.3.2 HLW Repository Licensing Schedule

For this analysis, it has been assumed that the licensing process for this facility will begin in March 2002 and will require 8.5 years to complete.

2.5.3.3 HLW Repository Licensing Cost

The DOE/FMDP is not responsible for any licensing costs associated with the HLW repository.

2.5.4 HLW Repository Shipments and Storage

Shipments to and Storage at the HLW Repository— Irradiated ("spent") nuclear fuel is stored in on-site water pools. Ideally, spent fuel will be removed from the spent fuel pools after a 10-year postirradiation period and transported directly to an HLW repository for final emplacement. The reactor process also includes a fourth process step whereby spent fuel could be removed from the pools and placed into on-site dry storage in specially designed canisters. Once irradiated, the MOX fuel is no longer required to be shipped by SST. Instead, it is assumed that the Civilian Radiation Waste Management System (CRWMS) transportation system will be utilized to transport the spent fuel from the PCLWR facility to the HLW repository. The CRWMS transportation system includes truck and rail-based spent fuel cask systems.

Shipment Information—The spent fuel will be transported to the HLW repository for emplacement. Table 2.39 provides estimates of the number of shipments required.

2.5.5 HLW Repository Schedule Summary

Responsibility for siting, designing and constructing, licensing, and operating the HLW repository resides with the OCRWM. For the purpose of this report, it is assumed that licensing will begin in March 2002 and require 8.5 years. Construction will begin in March 2005 and require 5.5 years. The delivery schedule for the spent MOX fuel to the HLW repository will require 17 years, from May 2021 to April 2038. Section 3.1 describes how the HLW repository schedule relates to the rest of the PCLWR alternative.

2.5.6 HLW Repository Cost Summary

The DOE/FMDP is not responsible for cost associated with the HLW repository. Like all operating reactors, the statutory fee of 1 mill/kWh will be paid into the nuclear waste fund. Section 3.2 describes how the HLW repository costs relate to the rest of the PCLWR alternative.

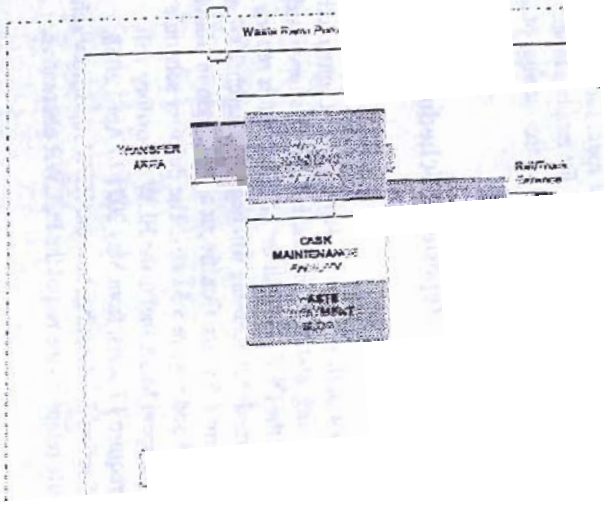
TRANSFER
AREA
CASK
MAINTENANCE

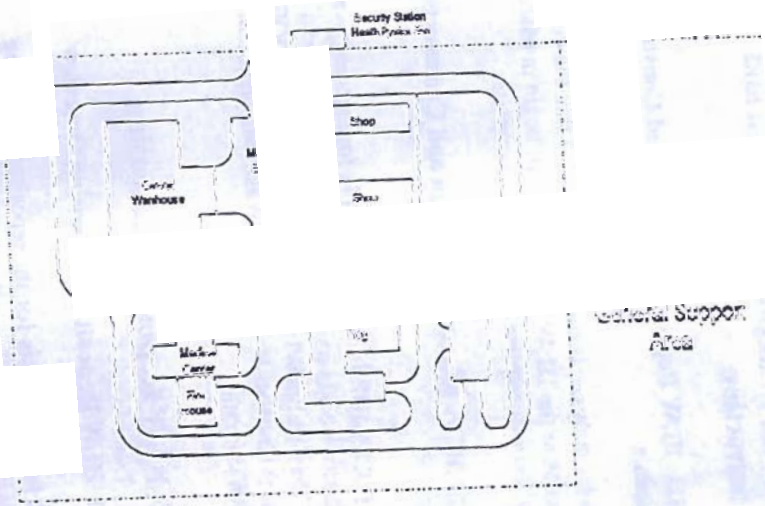
Security Station
Shop
Warehouse
Support
Area

ma	imum /package	Quantity plutonium/campaign (MT)	Estimate to be
4 P	ssemblies	~50	6

5.7 HLW Reposito Technical Viability

develop a qualitative
ility of a concept: a
aturity of a process;
e specification of the tech unknowns for the
ocess and the technical ri sociated with the
plication of the process; &D needs of the pro-

pt infrastructure, will
ctions.

Tec e
tech i-
ties
deve
nolo l
desi tory or bench-scale testing
stag cientific feasibility), the proto-
type ng engineering feasibility), or
ndustrialization/ commercialization stage. Even if
gnificant domestic development base does not
exist, a foreign experience base may be available.

The technology to handle MOX spent fuels in a surface and subsurface facility is currently available in industry. If it is assumed that a repository is operational when MOX spent fuel is to be emplaced, the maturity of the technology to receive and emplace the waste form is not likely to be an issue.

Technical Risks—The primary risk issue related to emplacement of MOX spent fuel in a repository is associated with the long-term performance considerations. This is necessary to satisfy the licensing requirements of 10 CFR Part 60. The long-term performance issues comprise releases and dosage to the accessible environment, long-term criticality conditions of the as-fabricated waste package, the degraded mode criticality, and the external criticality conditions imposed by introducing the MOX waste forms into a repository designed for LEU waste forms.

The incremental contributions to releases and doses by the MOX spent fuel appear to be small compared with those predicted for uranium-based commercial fuel. However, the cumulative releases and doses, from both the commercial and MOX fuels, must be shown to be within the envelope permitted by regulations. Since a repository has not yet been licensed, calculations of such cumulative effects have not been performed.

For the case when MOX fuel is irradiated in existing reactors, the as-fabricated reactivity worth within the waste package is such that the k_{eff} value is comparable to commercial SNF. Only a single case examining the degraded mode criticality (within the waste package) has been conducted for existing reactor waste forms. It shows the long-term performance to be acceptable. Other scenarios for degraded mode and external criticality must be examined to ensure that long-term criticality does not disqualify the PCLWR waste forms.

R&D Needs—Based on the preceding technical risks discussions, the primary analyses requirements are to conduct long-term criticality analyses for the degraded and external conditions for PWR spent fuels to determine the viability of emplacing these waste forms into an HLW repository.

2.6 Reference

1. National Academy of Sciences, *Management and Disposition of Excess Weapons Plutonium*, National Academy Press, 1994.

3. PCLWR Alternative Summary

3.1 PCLWR Alternative Schedule Summary

The PCLWR alternative schedule is a combination of the individual facility schedules discussed in Chap. 2. This overall schedule is summarized in Table 3.1 and shown in Fig. 3.1. The plutonium disposition mission begins when the first reactor attains full power in September 2009 and will be complete after the last core load, which contains MOX fuel assemblies, has been irradiated for a single cycle in September 2026.

Table 3.1. PCLWR alternative schedule summary

Task ID	Task name	Duration (years)	Start	Finish
1.	**FMDP Record of Decision**			12/1996
2.	**Congressional Funding Process**	3	12/1996	12/1999
3.	**PuP Facility**	22.8	10/1995	7/2018
4.	R&D	3	10/1995	9/1998
5.	Licensing, Permitting, and Siting	5	12/1996	12/2001
6.	Design	5.1	12/1996	1/2002
7.	Facility Modification and Preoperation	4.5	1/2002	7/2006
8.	Operation	10	7/2006	7/2016
9.	Decontamination and Decommissioning	2	8/2016	7/2018
10.	**MOX Fuel Fabrication Facility**	30.3	4/1996	7/2026
11.	Fuel Qualification	5	4/1996	4/2001
12.	Licensing, Permitting, and Siting	5	12/1997	12/2002
13.	Design	5	12/1996	11/2001
14.	Facility Modification and Preoperation	5	12/2001	12/2006
15.	LUA Fabrication for Use in a Sister Reactor	0.5	12/2006	6/2007
16.	MOX Fabrication Lead Time	2.1	6/2007	6/2009
17.	Operation	17.1	6/2007	7/2024
18.	Decontamination and Decommissioning	2	7/2024	7/2026
19.	**PCLWR Facility**	39.3	12/1998	3/2038
20.	Mobilization and M&O Contractor Selection	2.2	12/1998	3/2001
21.	Licensing and Permitting	5.4	3/2001	7/2006
22.	Reactor Design and Construction Completion	6.5	12/2003	2/2006
23.	LUA Irradiation in a Sister Reactor	3.1	6/2007	7/2010
24.	MOX Loading Duration	15.7	6/2009	2/2025
25.	Unit 1 Full Power			9/2009
26.	Last Assemblies—First Cycle	1.5	2/2025	9/2026
27.	Last MOX Discharged to Nuclear waste Pool			3/2028
28.	Nuclear waste Pool Duration	27	4/2011	3/2038
29.	**HLW Repository**			
30.	Licensing	8.5	3/2002	8/2010
31.	Construction	5.5	3/2005	8/2010
32.	MOX Delivery Duration	17	5/2021	4/2038

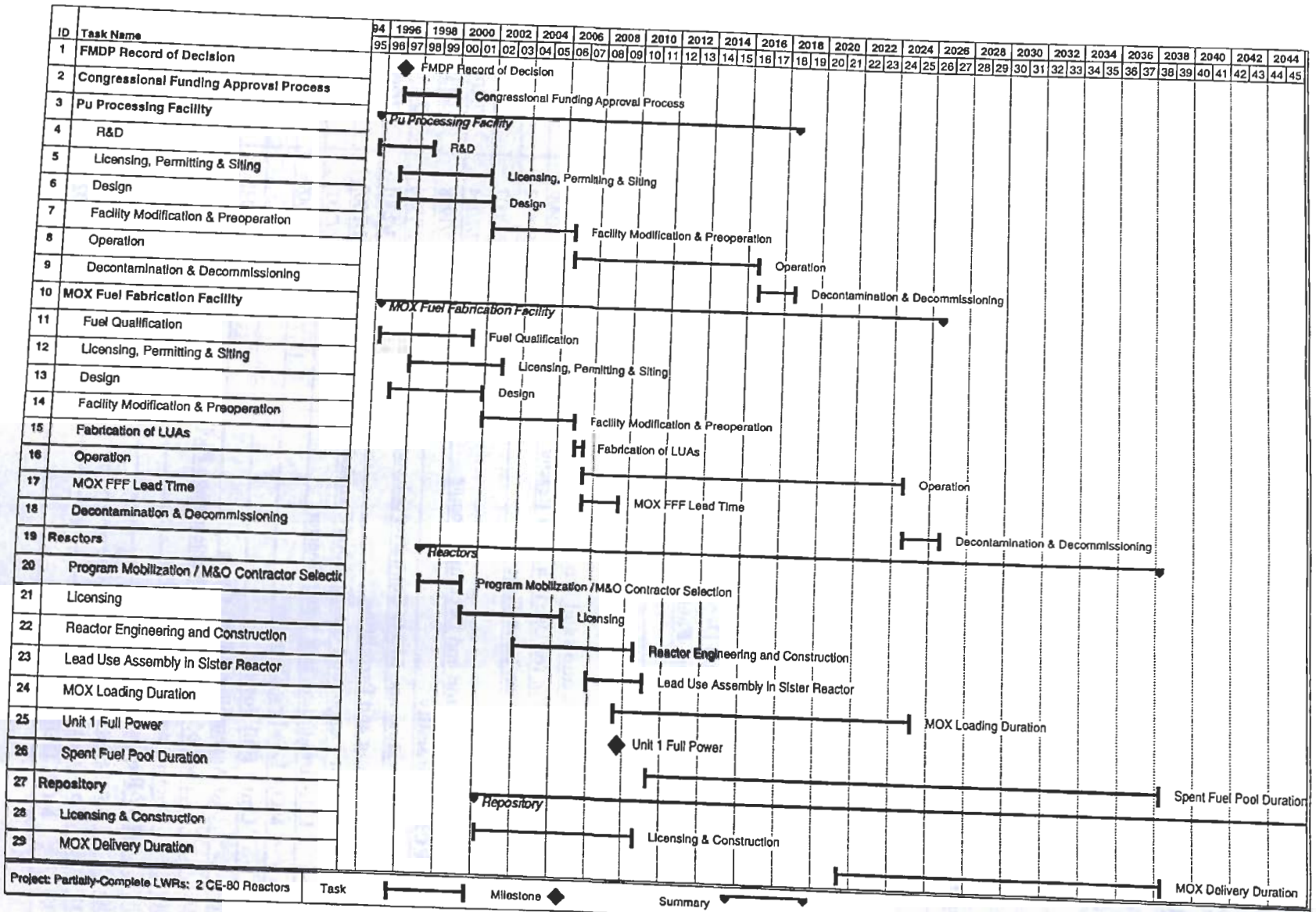

Figure 3.1. PCLWR alternative schedule summary

The plutonium disposition mission time is 17.2 years and starts 12.8 years after ROD.

The critical path for the alternative is the licensing, design, and facility modifications of the MOX fuel fabrication facility. However, as discussed previously, delays in the construction of PuP facility may move either of these facilities into the critical path.

The schedule risk for the PuP facility and MOX fuel fabrication facility are the same as for the other reactor-based alternatives. The schedule risk for building a partially complete reactor facility is higher than the schedule risk for modifying existing reactors because of the uncertainties in completing the reactor facility. However, there is a smaller schedule risk for newly completed reactors than for existing reactors for completing the mission because the new reactor will have a much longer useful life.

3.2 Alternative Cost Summary

Because of the large investment required for completing the reactors, the PCLWR alternative has the second-highest investment cost to the government and is exceeded only by the evolutionary LWR alternative (which requires two entirely new PWRs). Of the $3.1B in investment costs for all facilities, the two partially complete PWRs' completion costs dominate at $2.48B. Figure 3.2 shows this graphically and also breaks down the LCCs for the other required facilities.

Table 3.2 shows the facility LCCs in the 24-category format. It should be noted that the fee paid to the reactor operator has been broken out separately from its higher level category: O&M and Other LCCs. This has been done to allow comparison with other reactor options such as existing reactors and ELWRs. The recurring cost or "O&M plus Other LCCs" category is also largest for this reactor facility compared with that of the other facilities. It averages almost $140M/year for two reactors, which is reasonable compared with the cost of two-unit commercial reactors presently in operation and represents better utility cost experience. (The operations cost data were supplied by a southeastern U. S. utility.)

Table 3.3 shows a summary of the staffing levels for all facilities. The government operates the two PWRs

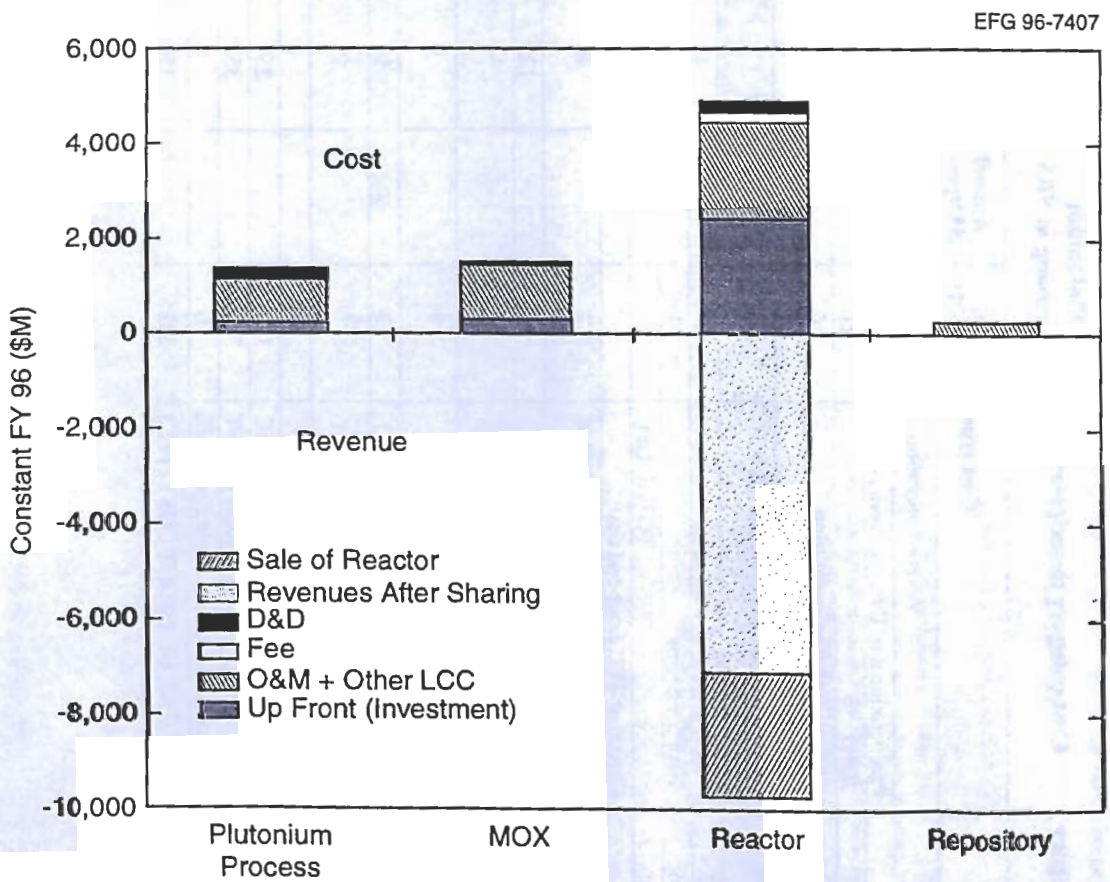

Figure 3.2. Facility LCCs for the PCLWR alternative

Category	Cost	...ription	Plu... process
	Preoperatio...		
1	R&D		
	...plans		0
5			50
6			
7			
8			17
			34
			32
			4
		...ependent)	3
		...es (AFI) ...10)	25
			56
	Plutonium halide processing		
	TOTAL UP-FRONT COS...		

Table 3.2. 24-Category LCCs forPCLWR option 50SFP2: two PWRs with full MOX cores (cont.)

Category	Cost category description	Plutonium processing at SRS		MOX fabrication in existing building at Fedfield site		Two PCLWRs		Repository cost[a]		Total for all facilities
		($M)	($M/year)	($M)	($M/year)	($M)	($M/year)	($M)	($M/year)	($M)
	Other LCCs:									
13	Operations and Maintenance staffing	785	78.5	471	27.6	976	61.0			2232
14	Consumables, including utilities	0		298	17.4	88	5.5			386
15	Major capital replacements or upgrades	0		202	11.8	272	17.0			474
16	Waste handling and disposal	66	6.6	68	4.0.	14	0.8	272	17.0	420
17	Oversight	10	1.0	17	1.0	208	13.0			235
18	M&O contractor fees (2% of categories 13–16)	17	1.7	21	1.2	235[d]	14.7			273
19	PILT to local communities	9	0.9	11	0.6	400	25.0			420
	Total Annual Recurring Costs		88.7		63.6		137.0		17.0	N/A
20	D&D (percentage of capital or $ estimate)	169		50		152	9.5			371
21a-1	Revenues (if applicable) MOX or electricity[b]	0		0		–7888	–493.0			–7888
21a-2	Revenue sharing					734[d]	45.8			734
21b	Salvage value of reactors[c]					–2586[d]				–2586
22	Government subsidies or fees to privately owned facilities	0		0		0	0			0
23	Transportation of plutonium forms to facility	35	3.5	26	1.5	18	1.1			79
24	Storage of plutonium at existing site facility									0
	Plutonium halide processing at LANL	1	0.1	0		0				1
	TOTAL OTHER LCC	1092	92.3	1164	65.1	–7377		272		–4849
	GRAND TOTAL ALL LCC	1413		1514		–4995		272		–1796

[a]Repository costs represent 1 mill/kWh fee paid by DOE-MD to DOE-RW.
[b]Total revenue calculated assuming 2 reactors, 1212 MW(e) each, 80% capacity factor, and 29 mills/kWh for 16 years.
[c]Reactor saleback price is net present value of profits for years 17–40 discounted at 9% real discount rate.
[d]These business-negotiable categories were not considered in Table 4-2 of the TSR for the PCLWR case.

Table 3.3. Staffing level summary

Facility	Direct staff (FTEs)	Indirect (FTEs)	Total (FTEs)
Plutonium processing	344	555	899
MOX	80	273	353
Reactors	500	500	1000
TOTAL	924	1328	2252

for the 16 years of the plutonium disposition campaign and then sells the reactors to a utility (perhaps the same one from which the partially complete reactors were purchased) for $2.6B (they have 24 years of useful life remaining). The revenue from the sale is shown in the pie chart on Fig. 3.3. The other $7.15B in net revenue (after revenue sharing) to the government is from the sale of electricity for 16 years at a market price of 29 mills/kWh [assuming a capacity factor of 80% and a net power level of 1212 Mw(e) from each of the two units] from which the 2.7 mills/kWh subsidy to the utility has been subtracted. The D&D for the reactor is $152M. This is low compared with the actual cost of D&D since the government is assumed to pay into a D&D escrow account and only the principal paid each of the 16 years is counted. At the end of the reactor life, when the new utility owner must D&D the plant, the principal and interest from the D&D fund (which was transferred to the owner at the time of sale and continued to accumulate interest) will be available. Unlike some of the existing commercial reactor options, a repository cost is shown. Since the government (DOE-FMDP) is the owner, it must pay into the nuclear waste fund the statutory 1 mill/kWh. This fund goes to another part of the government (DOE/RW), which manages the geologic repository program.

Figure 3.4 shows the annual constant-dollar cash flows from the government for this alternative. One can see that they are very front-end loaded because of the need to complete construction of the two PWRs and modify existing facilities to permit their use for plutonium processing and MOX fuel production. The effect of the offsetting 26.3 mills/kWh in net revenues is also shown. If these cash flows are discounted at a 5% real discount rate, a total discounted life cycle cost (TDLCC) of $0.84B results. (The TDLCC is greater than the undiscounted TLCC of –$1.8B because the offsetting revenues are realized later in the life cycle and are therefore very heavily discounted.) Tables 3.4, 3.5, and 3.6 summarize the undiscounted and discounted LCCs, respectively. Tables 3.4 and 3.5 represent the FMDP technical summary report (TSR) PCLWR case, which does not consider business-negotiable items (depicted in Table 4-2 of the TSR document). Table 3.6 shows the changes made to consider these items. The "bottom line" from this table represents the "RASR case" discussed in this document. It can be seen that both the RASR and TSR discounted LCCs fall in the same range as the TDLCCs for the existing LWR alternatives (i.e., in the $1.0B to $1.6B range).

Alternative PCLWR Case: Government use of LEU fuel while awaiting completion of MOX fuel fabrication facility. One utility has suggested that the government operate the reactor on LEU fuel during the interim period between completion of reactor construction and the first bundles of MOX fuel out of the MOX fuel fabrication facility. For illustrative purposes, this period has been assumed to be 3 years. Such a program would expedite training of the reactor staff. From an LCC standpoint, the government would realize 3 additional years of revenues, which after the subtraction of O&M costs and the cost of commercially purchased LEU fuel ($1193/kgHM), would net the government $250M annually. Over 3 years this would total –$750M in LCCs, which would increase the constant-dollar profit of the entire PCLWR alternative from –$1796M to –$2546M and reduce the discounted LCC from $840M to $400M.

3.2.1 Cost-Related Advantages of the PCLWR Alternative

1. Since the government will have completed a facility with 40 years of useful life, it can easily accommodate any new plutonium disposition missions beyond 50 MT of plutonium at little additional cost.
2. An existing southeastern U.S. utility–owned PC-reactor facility is located in the same region as an existing DOE reservation with plutonium-handling

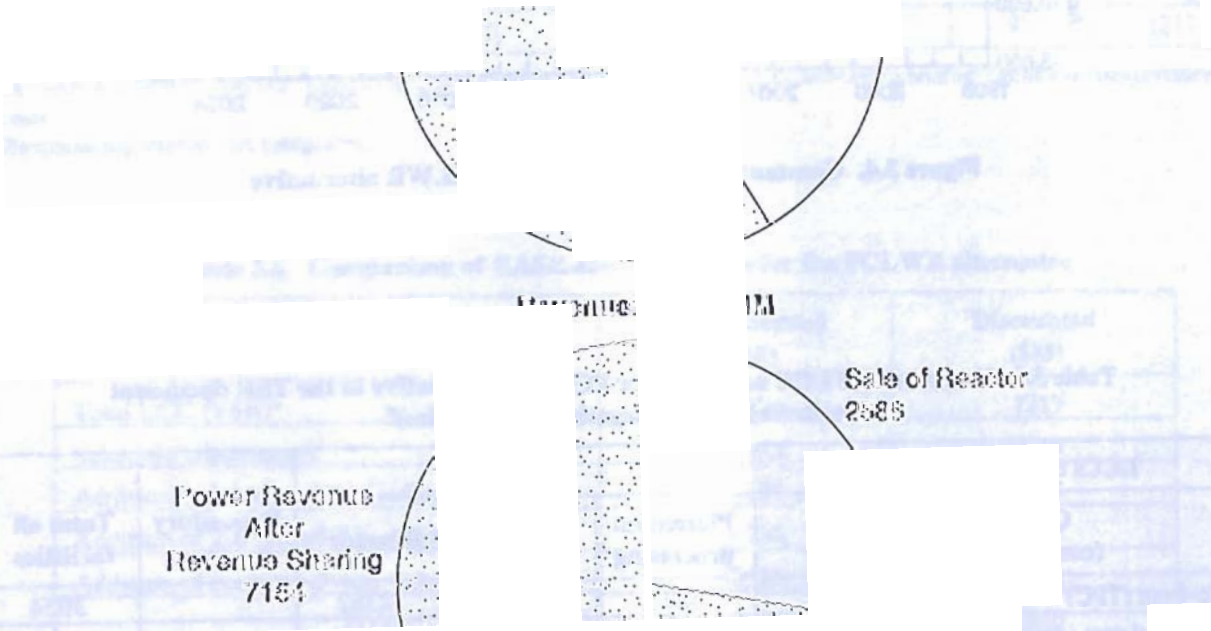
Sale of Reactor
2586
Power Revenue
After
Revenue Sharing
7151

7

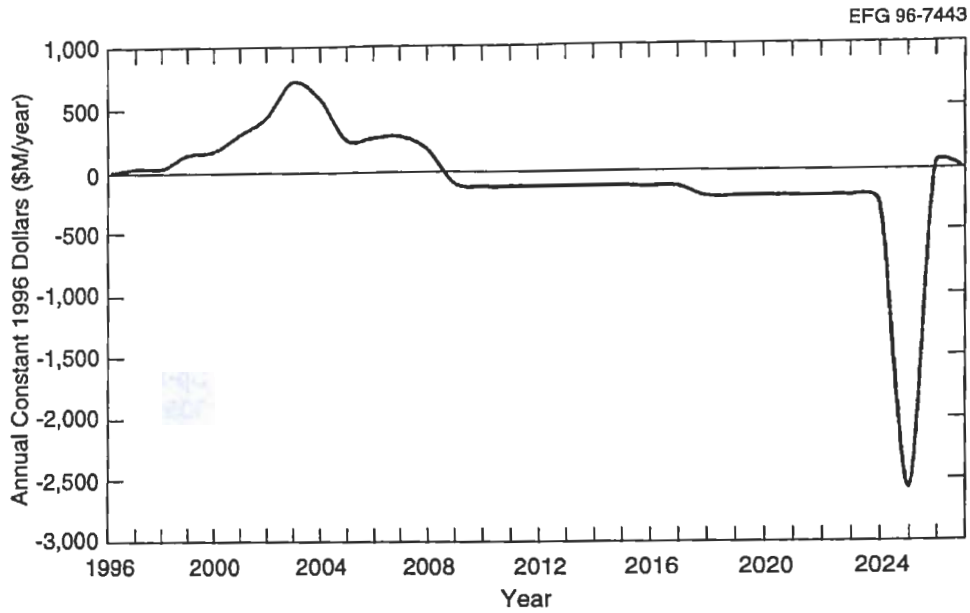

Figure 3.4. Constant dollar cash flows for PCLWR alternative

Table 3.4. Undiscounted LCC summary for PCLWR alternative in the TSR document (without business-negotiable categories)[a]

LCCs to U.S. government	Facility			Repository	Total all facilities
Cost category (constant 1996 $M)	Plutonium processing	MOX	Reactor		
Up-front (TPC)	322	350	2382		3054
LEU fuel cost (government reactor)			0		0
Nonfuel O&M including government transportation and nuclear waste fee	923	1069	2247	272	4511
Fee to utility owner or operator (reactor)[b]			0		235
D&D (including government payments to sinking fund for reactor)	169	50	152		371
Revenue sharing[b]	0	0	0		0
Power revenues before sharing	0	0	–7888		–7888
Sale of reactor to utility (salvage value)[b]			0		0
TOTAL COST	1414	1469	–3107		–224

[a]In Table 4-2 of the TSR, the "Operating Cost" category includes D&D costs in addition to nonfuel O&M and transportation costs.
[b]Business-negotiable categories.

Table 3.5. Discounted LCC summary for PCLWR alternative in the TSR document[a]

LCCs to U.S. government	Facility			Repository	Total all facilities
Cost category (discounted $M)	Plutonium processing	MOX	Reactor		
Up-front (TPC)	228	241	1718		2187
LEU fuel cost (government reactor)					0
Nonfuel O&M including government transportation	460	453	715		1726
Fee to utility owner or operator (reactor)[b]			0		0
D&D	62	12	60		134
Revenue sharing[b]			0		0
Power revenues before sharing	0	0	–2830		–2830
Sale of reactor to utility (salvage value)[b]			0		0
TOTAL COST	750	706	–337	98	1217

[a]In Table 4-2 of the TSR, the "Operating Cost" category includes D&D costs in addition to nonfuel O&M and transportation costs.
[b]Business-negotiable cost categories.

Table 3.6. Comparison of RASR and TSR LCCs for the PCLWR alternative

	Undiscounted ($M)	Discounted ($M)
Total LCC (TSR)[a]	–224	1217
Schedule adjustments[b]	+45	–115
Addition of fee to reactor GoCo operator[c]	+235	+89
Addition of 2.6 mills/kWh revenue sharing[c]	+734	+277
Addition of reactor salvage value (revenue)[c]	–2586	–628
TOTAL LCC (RASR)	–1796	+840

[a]DOE rounded LCC values on TSR Table 4-2 to –$230M and $1220M, respectively.
[b]Cost effects of changes in MOX and reactor schedules (changes made after TSR was issued).
[c]These three items are the business-negotiable categories that were not covered in the TSR.

infrastructure (SRS) for plutonium processing and MOX fabrication facilities. The southeastern site assumed also has good market potential for the future sale of electricity.

3. A facility completed by the government might also provide 40 years of tritium production for defense needs.

4. Compared with those of the ELWR, the cost and schedule advantages are substantial, since most of the licensing and construction for the reactors has already been accomplished.

3.2.2 Cost-Related Disadvantages of the PCLWR Alternative

1. The high investment cost makes funding of this alternative by DOE and Congress very difficult in light of high federal budget deficits and the need for short-term fiscal austerity.

2. The government would become an electric power producer, a function it is now trying to shed in other regions of the country. It also would assume

the risk of finding a buyer for the plant at the end of the plutonium mission.

3. With a partially complete reactor facility, the possibility of schedule slip due to license modifications and construction delays is higher than for existing reactor alternatives.

4. The risk associated with future electric power demand and revenues is large.

3.2.3 Potential for Privatization

It has been suggested that a private utility or consortium bear reactor completion costs and that DOE subsidize the cost of plutonium disposition on an annual fee basis in order to repay the private investors. Unfortunately, the annual subsidy would be very large (on the order of several tens of millions of dollars in addition to O&M costs) and would have to be maintained over 40 years at that rate to make the investors whole and recover the investment cost not covered by revenues to the private owner. The cost difference is driven mainly by the fact that the government's mortgage to the private consortium would be at significantly higher interest rates than the government's internal borrowing rate, which is represented by the 5% real discount rate.

3.3 PCLWR Alternative S&S Summary

DOE and its predecessor agencies have successfully managed S&S of SNMs for several decades. DOE maintains an impeccable record of providing adequate measures to ensure against theft or unauthorized access to SNMs. These measures include physical security, material accountability, inventory safeguards, and other technologies. These measures have been applied to SNMs in a variety of material forms, ranging from bulk SNM powders and solutions to pits.

An assessment has been performed to identify where critical vulnerabilities might exist in operations or processes that make up the reactor disposition alternative. The purposes of the assessment were (1) to determine whether any inherent vulnerabilities exist that represent unique or novel threats to maintaining adequate measures against theft or unauthorized access and (2) to identify any threats in the reactor disposition alternative operations that will require particular attention by facility designers to ensure that potential vulnerabilities are properly addressed.

The final disposition form of the plutonium as produced by any of the reactor alternatives meets the nuclear waste standard. The PuP facility and MOX fuel fabrication facility, which are common to all reactor alternatives, have the highest risk. Once the fuel is irradiated, the risk is reduced significantly. Table 3.7 provides a summary of the potential risks for theft, diversion, and retrieval.

There are no unique or novel threats represented by the reactor disposition alternative that would jeopardize DOE's ability to ensure control of SNMs. Similar or identical processing operations have been successfully accomplished in the DOE complex over the past 40 years. On the other hand, several critical vulnerabilities have been identified that will require proper attention in facility design and operations. Most of the vulnerabilities relate to handling large amounts of SNM in attractive bulk form, a set of conditions that require more extensive, obtrusive, and sophisticated measures be applied to ensure proper safeguards against theft or unauthorized access. In all cases, the overall risk of theft or unauthorized access to material will be very low.

3.4 PCLWR Alternative Technical Viability Summary

The PuP facility is the least viable component of the PCLWR alternative. This observation is not a deciding factor in alternative choice because all alternatives must rely on this facility. Though fabrication technology is well known, several issues unique to the plutonium disposition program remain to be resolved. Since the reactor operates with fuel having a fissile fraction similar to current uranium-based fuels and since the fuel cycle burnup is similar to existing, extended burnup cycles, viability issues related to the reactor and repository are minor. Furthermore, these issues should be resolvable within the time it takes to construct and license the plutonium processing and MOX fuel fabrication facilities. Consequently, the program mission will not be impacted.

The risk involved with this alternative is due to scheduling uncertainty. This, in turn, leads to an associated economic risk. There is no question that the technologies are feasible. However, the time to implement, and even the need to implement certain technologies, is uncertain. It is not conceivable that the program disposition goal is unattainable. However, the amount of development work required is uncertain. The risk of not meeting the program goal increases, but by an

ransit | Reactor

v/low

lium

nd | High

igh

m/ | M
m
ow | L

Medium | M | n/low | Low | Lo
Medium | M | n/low | Low | Lo

l with assessment of fis-
ovision of regulatory
fuel cycle. Throughput
of process reliability and
herefore time, process optimiza-
ch to m and cost reduction.

PCLWR A ative
ansportatio mary

tiple facilities ar

sequential and plutoni
ent locations t

e
W

storage at many
. This
a PuP
where the
then

existing bu
fabricated,
ported to t
are assume
reactors w
after the la lutonium is
Nuclear w
stored in n
years. Ult
transported

he
ip

rst
10
and
ent.

3.6 Othe

3.6.1 Reduction of Inventory Alternatives

disposition
) existing
3 PCLWRs
ium disposition

tion. First, a pluto

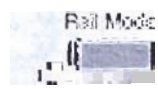

Spent MO

low chart sho

of ^{235}Pu betwe

plutonium inve
isposition. All

n int

is a favorable ... ctor-based alter
tives that is n ... mobilization or
borehole disp ...

es for depleted u

Energ ... on

h

sposition ... lutoni ... MOX fuel
result in ... of ~1. ... MWd of
cal energ ... gh elec ... energy to
the state ... for abo ... ears.

ce it has
form, have ... stimated to

Beneficial Use of Deple ... Uranium

otaling $5

ternative involves the use of ~ ... MT of
d uranium in the manufacture ... OX fuel.
rrent inventory of DOE-owned ... ted ura-

Table 3.8. Plutonium inventory reduction for reactor-based disposition alternatives

Alternative	Without reactor disposition (MT)			After reactor disposition (MT)			Plutonium inventory reduction (MT)
	Weapons-grade plutonium	Reactor-grade plutonium[a]	Total	Weapons-grade plutonium	Reactor-grade plutonium	Total	
Existing LWRs	50	14.7	64.7	0	35.0	35.0	29.7
CANDU HWRs	50	12.5	62.5	0	36.9	36.9	25.6
PCLWRs	50	0	50	0	36.8	36.8	13.2
ELWRs	50	0	50	0	36.4	36.4	13.6

[a]Reactor-grade plutonium that would be produced from UO_2 fuels in the mission reactors during the mission period if a nonreactor disposition alternative were employed.

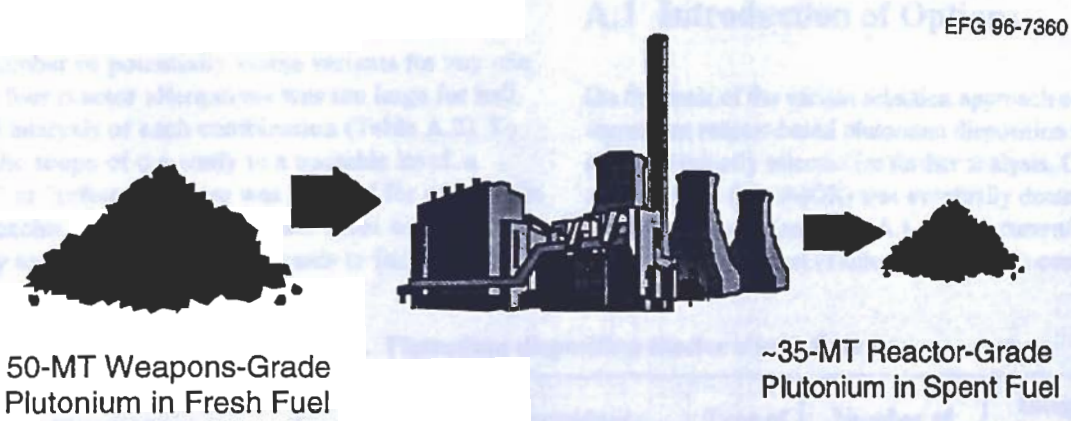

Figure 3.6. Depiction of consumption of plutonium by reactor alternatives

3.6.4 Influences on Russia and Other Countries

In view of the mutual desire of the United States and Russia to facilitate disposition activities, it is essential for the United States to set appropriate standards and promote timely implementation of secure monitoring regimes and ultimate disposition of nuclear materials in Russia and other countries. Russian officials have indicated their preference for reactor-based plutonium disposition technologies in several international forums. The existence of critical elements of the reactor-based plutonium disposition infrastructure in both countries would facilitate rapid mutual progress should the United States select the reactor-based plutonium disposition approach.

3.7 Reference

1. National Academy of Sciences, *Affordable Cleanup? Opportunities for Cost Reduction in the Decontamination and Decommissioning of the Nation's Uranium Enrichment Facilities*, Academy Press, 1966.

Appendix A
Summary Description of Plutonium Disposition Reactor Alternatives and Variants

As described in Chap. 1, five basic reactor-based plutonium disposition alternatives survived the screening process (Table A.1).

Regardless of the reactor alternatives (LWRs, CANDUs, etc.) under consideration, multiple process or facility variations are possible at several points in the material flow (Fig. 1.1). Each of these end-to-end process and facility chains or "variants" constitutes a unique approach to the plutonium disposition mission. Thus, an "alternative" is a group or class of variants that share a generic reactor type (existing LWRs, CANDUs, etc.).

The number of potentially viable variants for any one of the four reactor alternatives was too large for individual analysis of each combination (Table A.2). To limit the scope of the study to a tractable level, a "base" or "reference" case was selected for each of the four reactor alternatives. The base cases were defined simply to be reasonable initial cases to facilitate the analysis. Other variants within the alternative were considered for analysis only if they were perceived to be significantly different from the base case and to have some advantage over it. Quantitative criteria or "variant discriminators" were required to implement this definition and to select the variants to be analyzed for each reactor alternative. Five "variant discriminators" were ultimately adopted by the RxAT (Table A.3). A variant was analyzed if it was anticipated that any one of these five criteria would be met, with the exception of the hybrid alternatives.

A.1 Introduction of Options

On the basis of the variant selection approach outlined above, ten reactor-based plutonium disposition scenarios were initially selected for further analysis. One of these options (EuroMOX) was eventually deemed to be unworkable (see Sect. A.1.5). The current alternative/variant set (Tables A.4 and A.5) consists of

Table A.1. Plutonium disposition reactor alternatives

Alternatives		Plutonium processing/ MOX fabrication facility	Type of reactor	Number of reactors	Integral neutron absorbers
Existing LWRs	Existing facilities	Existing facilities on DOE site	PWR	5	No
	New facilities	New collocated PuP facility and MOX fabrication plant	BWR[a]	4	Yes
PCLWRs		Existing facilities on DOE site	PWR	2	Yes
ELWRs		Existing facilities on DOE site	PWR	2	Yes
Existing CANDUs		Existing facilities on DOE site	CANDU	2 for 5 years on reference fuel; then 4 reactors on advanced fuel (CANFLEX)	No

[a]BWRs could also be implemented using existing facilities and without integral neutron absorbers. The facility combinations considered were done only for the purpose of producing bounding scenarios. The decision at ROD would not down select between PWRs and BWRs if the existing reactor alternative is selected.

Table A.2. Deployment approaches for LWRs

Parameter	Range of possible choices	Comments
PuP facility	• Greenfield—new facility at a new site • New facility at a DOE site • Existing facility at a DOE site	All three options could also be done either in conjunction with (cofunctional, collocated facilities) or separate from a MOX fuel fabrication facility.
MOX fuel fabrication facility	• Ownership—privately owned domestic; government-owned domestic; existing European facilities • Sitting—greenfield, new facility at a DOE site, or an existing facility at a DOE site	Except for the European cases, all options could also be done in conjunction with or separate from a PuP facility. (It is likely that plutonium processing would remain government owned.)
Type of reactor	PWRs and BWRs	Even for a specific type of reactor, many designs are available. Both types could operate with or without integral neutron absorbers.
Number of reactors	2 to 5[a]	Two is the minimum number of reactors. The maximum number of reactors is limited by the number of reactors available.
Core design approaches	• Amount of MOX per core—full core with neutron absorbers; full core without neutron absorbers; partial MOX cores • Irradiation—from 10,000 to 45,000 MWd/MT HM (approximately) • Fuel cycle length—12, 18, and 24 months	

[a]Five PWRs are similar to four BWRs for environmental impacts.

Table A.3. Reactor variant discriminators

Variant discriminator	Description
1	The *start time* for plutonium disposition for the proposed variant decreases by 3 or more years from the base case.
2	The *duration* of the plutonium disposition mission decreases from that of the base case by 5 or more years.
3	The *investment cost* before initial plutonium disposition for the proposed variant is at least $500M less than the base case.
4	The *discounted life cycle* cost for a proposed variant is at least $500M less than the base case.
5	The proposed variant involves *facilities in a foreign nation.*

Table A.4. Reactor alternatives and variants—50-MT cases

ID	Category	Description
50SFL5	Existing LWR Base case	• 50 MT of plutonium • Plutonium processing — Halide plutonium processing at LANL — Modified existing 221-F PuP facility (ARIES and new aqueous lines) at SRS • MOX fabrication — Domestic, federally owned, GoCo fuel fabrication facility located in existing building on existing federal site • Reactors — Five privately owned domestic PWRs — *No* integral neutron absorbers in fuel • Spent fuel to HLW repository in United States
50SPL5	Existing LWR Variant 1	Same as 50SFL5 except: • Privately owned MOX fabrication facility located in a new building on an existing federal site
50COL4	Existing LWR Variant 2	Same as 50SFL5 except: • Federally owned, collocated plutonium processing and MOX fabrication facility located in a new building on an existing federal site • Four privately owned BWRs • *With* integral neutron absorbers in fuel
50QSL5	Existing LWR Variant 3	Same as 50SFL5 except: • Plutonium available from ARIES demonstration and prototype operation • Early MOX fabrication in existing European commercial facilities • Lag storage facility added for fresh MOX fuel
50SFP2	Two PCLWRs	Same as 50SFL5 except: • Two partially complete federally owned PWRs are completed and employed for mission • *With* integral neutron absorbers in fuel
50SFE2	Two new ELWRs	Same as 50SFL5 except: • Federally owned reactors located on an existing federal site • *With* integral neutron absorbers in fuel
50SFC2-4	CANDU Base case	Same as 50SFL5 except: • Two CANDU units operated on reference CANDU fuel for 5 years, followed by • Four CANDU units operated on CANFLEX fuel for remainder of mission

e: It is ver
reactor-b
have been optimized
other characteristic.
report include the ev

fa *s. The sele*
s

hese facilities.]

A.1.1 ve

The ex
tic LW
actual r
for the
States are varied and extensive. The U.S. con
reactor p ssists of several differen
vintages
reactor v
RxAT co

50SFL5
the dispo
ties cons
halide pl
ARIES a
MOX fu

33SFL LWR-

is "hybrid" approach
/Rs in conjunction with

Case
e existin ed PWRs
sform 32 MT of plutonium to a
FS.

Table A.6. Summary of throughput characteristics for plutonium disposition reactors

ID No.	Reactors	Loading time[a]	Plutonium in HM (%)	Initial loading (MT)		Plutonium throughput (MT/year)	MOX (HM) throughput (MT/year)	Burnup (MWd/MT)
				Plutonium	HM[b]	Average[c]	Average[d]	
50SFL5	Five PWRs	9.8	4.3	1.5	35.4	5.0	118.2	45,000
50SPL5	Five PWRs	9.8	4.3	1.5	35.4	5.0	118.2	45,000
50COL4	Four BWRs	16.6	3.0	0.9	31.2	3.0	98.8	33,700
50QSL5	Five PWRs	13.1	4.3	0.5	10.6	5.0	118.2	45,000
50SFP2	Two partially complete PWRs[e]	15.7	4.5	3.2	105.8	3.0	67.7	32,500
50SFE2	Two CE System 80+ PWRs	13.3	6.8	6.7	98.2	3.5	52.2	42,600
50SFC2-4	Two Bruce A CANDUs for 5 years, then four Bruce A CANDUs with CANFLEX for 7.2 years	12.2	2.2[f] 3.4[f]	2.9	138.1	2.9 5.0	138.1 149.9	9,700 17,100

A.1.2 CANDU HWR Alternative

50SFC2-4 – CANDU—This case is identical to the existing LWR Base Case 50SFL5 except the reactors will be two CANDU units operated on reference CANDU fuel for 5 years followed by four CANDU units operated on CANFLEX (extended burnup) fuel for the remainder of the mission. This case utilizes existing CANDU reactors at the Bruce A Site in Ontario, Canada.

33SFC2 – Hybrid CANDU—This case is identical to Case 50SFC2-4 except two CANDU units operated on reference CANDU fuel would be used to disposition 32.5 MT of plutonium.

This "hybrid" approach consists of the use of two CANDU reactors in conjunction with another disposition technology (vitrification or deep borehole technology) to disposition the entire inventory of surplus plutonium. Vitrification or deep borehole technology would be used to disposition the remaining 17.5 MT of surplus plutonium.

A.1.3 PCLWR Alternative

50SFP2 – PCLWR—This case is identical to the existing LWR Base Case 50SFL5 except the reactors will be two newly completed, federally owned PWRs (currently partially complete). Fuel will contain integral neutron absorbers.

A.1.4 ELWR Alternative

50SFE2 – ELWR—This case is identical to the existing LWR Base Case 50SFL5 except the reactors will be two newly completed, federally owned ELWRs constructed on an existing federal site. Fuel will contain integral neutron absorbers.

A.1.5 EuroMOX—The Elusive Option

The EuroMOX alternative involves the preparation of PuO_2 at a new GoCo PuP facility to be built in the United States, and transportation of the oxide to Europe, where it would be fabricated into MOX reactor fuel assemblies (Table A.7) and utilized as full-core MOX fuel for loading in existing European reactor facilities. Final emplacement of the spent fuel assemblies would be within one or more HLW repositories in Europe.

During the course of this study, it became clear that none of the existing European MOX fuel fabricators would be willing to act as an entry point for American weapons-grade MOX into the European commercial MOX economy. Thus, an immediate and seemingly insurmountable obstacle to implementation of this alternative is apparent. Additionally, the desire for timely disposition of the weapons-grade plutonium would require either the relicensing of two or more foreign reactors for full-MOX cores or the use of several foreign reactors with partial-MOX cores. It is possible that multiple reactors in more than one European country would be required to implement this alternative. The combination of the MOX fabricator's unwillingness to participate in this endeavor, combined with the political and institutional difficulties associated with its implementation, effectively eliminates EuroMOX from consideration as a viable alternative.

Table A.7. Current and anticipated European MOX fuel fabrication capacity

Owner/facility/location	Current MOX fabrication capacity (MTHM/year)	Anticipated MOX fabrication capacity in 2000 (MTHM/year)
Belgonucleaire/PO/Dessel	35	35
COGEMA/MELOX/Cadarache	30	30
COGEMA/MELOX/Marcoule	80	210
COGEMA/MELOX/La Hague	0	50
BNFL/MDF/Sellafield	8	8
BNFL/SMP/Sellafield	0	120
TOTALS	153	453

Appendix B
Schedule Analysis Approach

B.1 Introduction

NAS labeled the existing international regime for surplus plutonium to be a "clear and present danger" and urged that actions should be initiated to effect the disposition of surplus plutonium without delay. Thus, timeliness should be a primary determinant for the selection of approaches for plutonium disposition. The FMDP RxAT interprets timeliness to comprise three performance attributes:

- **Time to start disposition**: For the partially complete and ELWR options, the mission begins when the first reactor begins operating at full power using a full MOX core. For the existing LWR options, the mission begins when the first reactor is loaded with MOX fuel, after the LUAs. For the CANDU options, the mission begins when the first reactor is loaded with MOX fuel.
- **Time to complete mission**: For all of the reactor options, the mission is complete after the final load of MOX fuel has been irradiated for a specified time in the reactor. For the existing and partially complete LWR options, the mission is complete after the first irradiation cycle of the last core load containing MOX fuel assemblies. For the CANDU options, the mission is complete after the final reference MOX or CANFLEX fuel bundles have been discharged from the reactors. In the ELWR case, for the ABB-CE System 80+ loading schedule, which assumes a single 3.75-year irradiation cycle for each core load with three reshuffles of the core load, the mission is complete after the first reshuffle of the last core load containing MOX fuel assemblies.
- **Schedule certainty**: A full uncertainty analysis of the implementation schedules was considered too premature for the analysis presented in this document. A qualitative assessment of the schedule certainty has been included in each of the facility schedule sections in Chap. 2.

The schedule estimates were generated by the RxAT presuming a moderate national priority for plutonium disposition, as opposed to the very high national priority, as was associated with the Manhattan Project or the Apollo Project. Similarly, the RxAT assumed no protracted delays with funding, licensing, or technical problems.

B.2 Schedule Elements

Each deployment schedule has been developed by combining the schedules for each of the individual facilities involved in the alternative. The major elements for each of these schedules include the following:

- project definition and approval;
- siting, licensing, and permitting;
- research, development, and demonstration;
- design;
- facility modification or construction, procurement, and preoperational activities;
- operations; and
- D&D.

The completion of each of these facility elements must be sequenced properly with the other facilities. For example, the MOX fuel fabrication facility needs to have a sufficient supply of PuO_2 to operate. Similarly, the reactors require a sufficient supply of fuel to meet the reload schedule.

In defining the schedule elements for a large government project, there are a number of activities required for federal projects that may not apply or are less important for a private-sector project. These complications are reflected in the schedules and include the following elements:

- congressional line item approval and funding authorization,
- compliance with NEPA, and
- special procurement and vendor selection rules and regulations.

licensing dur
based on ana h
the full disco s
durations sh s
with the NRC.

- For all of the LWR facilities, the licensing processes are based on the analyses by Fluor Daniel, Inc. For the existing LWRs, the license modification process is assumed to take 4.25 years for the PWR options, which do not have integral neutron absorbers in the MOX fuel assembly, and assumed to take 5.25 [illegible] option, which [illegible] sorbers in the [illegible] the existing LWR [illegible] mit for MOX fuel [illegible] LUAs have been [illegible] cle period a [illegible] for confirma [illegible] design [illegible] prior to the reload permit review.

— For the existing LWR options, the initial assemblies will be used as LUAs, and full mission fuel production will begin 6 months later.

— The operational schedules for the MOX fuel fabrication facility in each option are based on the fuel assembly production schedule shown in Table B.1.

- Reactor facilities:

  — The assumptions for the design, construction, and operation of the various reactor facilities are discussed in their respective volumes.

- HLW repository facility:

  — For the LWR options, it has been assumed that the licensing for the HLW repository will begin in March 2002 and be completed in August 2010. The construction of the facility will begin in March 2005 and be completed in 2010. The facility will be ready to accept the spent MOX fuel assemblies after the assemblies have cooled in the spent fuel cooling pool for 10 years.

  — For the two CANDU options, it has been assumed that the Canadian HLW repository facility will be opened in 2025 for spent MOX and CANFLEX fuel, which has cooled in the spent fuel pools for 10 years before the opening of the facility. These assemblies will be stored in dry cask storage until the repository is opened.

Table B.1. MOX fuel fabrication facility production schedule

Alternative	Fuel assembly output/year	Total number of mission assemblies	Plutonium throughput (MT/year)	Average throughput (MTHM/year)	Mission operation (years)
50SFL5, 50SPL5	280	2,756	5	118	9.8
50QSL5 European	85	375	1.5	35.8	4.5
Domestic	280	2,381	5	118	8.5
50COL4	602	9,416	3.2	107	15.6
33SFL3	170	1,819	3.0	71.7	10.7
50SFP2	157	2,692	3.0	68	17.1
50SFE2	129	1,807	3.6	53	14
50SFC2-4	9,050	45,250	3.0	138	5
	10,500	75,279	5	150	7.2
33SFC2	9,050	98,485	3.0	138	10.9

Appendix C
Cost Analysis Approach

C.1 Introduction

A goal of the FMDP is to minimize the incremental cost impact on the government and taxpayers. Although the national security benefits clearly outweigh the costs involved, significant budget pressures are projected throughout program execution. Timing and allocation of costs were assessed. The following cost-related performance factors were considered to evaluate the extent to which a particular variant is cost-effective.

- **Investment and start-up cost:** Investment and start-up cost refers to R&D, construction, retrofit, and program infrastructure costs that are incurred early in the program. These costs are known as Total Project Costs (TPCs).

- **Discounted LCC:** LCC is defined as the net present value of all "cradle to grave" government cash flows including those in the TPC. LCC includes adjustments for revenues that may be produced by electric power production but does not include the sunk (pre-FY 1997) costs of existing facilities or other costs that would be incurred whether or not any action is taken.

For large government projects, such as the FMDP, there is the need to consider not only the costs to design and construct the project, but also the costs to operate the facilities over their lives and safely D&D them. For this reason the total life cycle costing (TLCC) approach is used for cost estimating to obtain the true "cradle-to-grave" costs. This costing methodology also makes comparison of competing plutonium-disposition alternatives more meaningful. Many of the alternatives being considered have different operating lifetimes, and the TLCC concept allows schedule differences to be correctly reflected in overall costs.

Early in the FMDP evaluation process a set of cost estimating guidelines and a 24-category LCC estimating format (Table C.1) were supplied to the Alternative Teams for each technology. This was done to ensure comparability between estimates and assist the decision-making process. The Alternative Teams were responsible for preparation of the LCCs, which were then reviewed by the Systems Analysis Team for completeness and adherence to the guidelines. In the case of the reactor estimates, much of the cost data came from 1993 and 1994 plutonium-disposition feasibility studies by reactor vendors, reactor cost data bases at ORNL, DOE plutonium-handling sites such as SRS, and the two weapons research laboratories (LLNL and LANL) and their A/E subcontractors. The FMDP multilaboratory Systems Analysis Team had the role of ensuring data comparability. It should be noted that the focus in these studies is the LCC to the federal government, and specifically those costs that will be borne by FMDP. Costs to private concerns such as utilities, fuel suppliers, etc., are not considered in this study; however, they may have been used during the estimating process to calculate costs that are ultimately passed on to the federal government. (An example would be the cost of MOX fuel from a privately owned facility specifically built to meet government plutonium disposition needs.)

C.2 Major Cost Categories

The 24 LCC categories can be rolled up into three higher level categories: investment cost, recurring costs, and D&D costs. Each category includes the following items:

- **Investment TPC:** This cost is essentially the sum of the "up-front" costs needed to bring a facility into full-capacity operation and includes planning, R&D, ES&H studies (including NEPA), site qualification, QA planning, permitting, safety analysis, design, construction, project management, initial spare equipment items, facility start-up, staff training, and manual preparation.

- **Recurring Costs:** These costs are incurred during normal facility operation after start-up and include plant staffing cost (including fringe benefits and taxes), costs of process consumables and maintenance materials, utility costs, administrative and plant overheads, transportation costs for nuclear materials, oversight costs, fees to the facility management contractor, capital replacement items, waste-handling costs, and PILT to local

Table C.1. 24-Category format for LCC estimates

Category	Cost category description (Costs in 1996 constant dollars)
	Preoperational or OPC part of up-front cost
	Up-front costs:
1	R&D
2	NEPA, licensing, permitting
3	Conceptual design
4	Implementation plans: QA, site qualification, S&S
5	Postconstruction start-up
6	Risk contingency (to be derived from uncertainty analysis)
	TOTAL OPC
	Capital or TEC part of up-front cost:
7	Title I, II, III engineering, design, and inspection
8a	Capital equipment
8b	Direct and indirect construction/modification
9	Construction management
10	Initial spares (technology dependent)
11	Allowance for indeterminates (AFI) (percentage of categories 7–10)
12	Risk contingency (to be derived from uncertainty analysis)
	TOTAL TEC
	TOTAL UP-FRONT COST (TPC)
	Other LCCs (years of operations):
13	O&M staffing
14	Consumables including utilities
15	Major capital replacements or upgrades
16	Waste handling and disposal
17	Oversight
18	M&O contractor fees
19	PILT to local governments
	TOTAL RECURRING COSTS
20	D&D
21a	Revenues (if applicable) MOX or electricity
21b	Revenue from sale of reactor
22	Government subsidies or fees to privately owned facility
23	Transportation of plutonium forms to facility (or T&PT)
24	Storage of plutonium at existing 94-1 site facility
	TOTAL OTHER LCC
	GRAND TOTAL ALL LCC (1996 $M)

communities. [In many of the charts this category is also called "O&M (Operations and Maintenance) and Other LCCs."]

- **D&D Costs:** These are the costs incurred at facility end-of-life to decontaminate and remove process equipment and to decontaminate any process buildings to a safe or "habitable" state where no adverse human health or environmental consequences result from their continued existence on the site.

A special category is that of revenues. For some reactor alternatives the federal government may benefit from the sale of the following items:

— Electricity: If the government owns the nuclear power plant, as in this case, electricity will be sold.

— MOX fuel: If the government owns the MOX fuel and sells it to a private utility reactor owner, the fuel would probably be sold at a price close to that of an energy equivalent amount of LEU fuel.

— The reactor power plant: If the government owns the power plant during the duration of the plutonium disposition campaign, it may wish to sell the plant to a utility at the end of the campaign, thus removing the government/FMDP from the business of selling electricity.

C.3 General Cost Assumptions for the PCLWR Case

- All costs are reported in constant 1996 dollars.

- LCCs are reported for four facilities:

  — the PuP facility: a federally owned facility assumed located in an existing facility at SRS;

  — the MOX fabrication facility: a federally owned facility assumed located in an existing building at a DOE site with plutonium-handling infrastructure;

  — the two partially complete PWRs: federally owned power plants assumed located on a utility site in the southeastern United States; and

  — the HLW repository: planned federally owned facility servicing HLW and spent fuel disposal needs of DOE/FMDP, DOE/DP, and the commercial nuclear power industry.

- Revenues are assumed available in the Southeast at a unit rate of 29 mills/kWh or $29/MWh. A highly competitive, deregulated electricity market is assumed over the post-2000 period of interest. The revenues represent projected market rates and not the cost of electricity production from the reactors using MOX or LEU fuel.

- 50 MT of plutonium are dispositioned over a 16-year irradiation campaign in the two PWRs.

- Plutonium processing LCCs and MOX fabrication LCCs are based mainly on data from LLNL, LANL, and SRS. Reactor LCCs are based on data from a PWR utility and ORNL.

- Repository costs are based on the statutory 1 mill/kWh spent fuel fee prescribed by the 1982 Nuclear Waste Policy Act as amended. Revenue estimates are based on ORNL interpretation of EIA projections and discussions with utilities.

- Upon completion of the 16-year plutonium disposition campaign, DOE/FMDP sells the reactor to a utility or other owner for the net present value of the remaining 24 years of profits discounted at a private-sector real (inflation-free) discount rate 9%/year to the year of sale. (Profits in this case are defined as the difference between revenues and the total of fuel and recurring costs.)

- A total discounted dollar figure is given for this alternative. It is calculated by spreading the constant-dollar cash flows in a manner consistent with the project schedule, and then discounting these cash flows at 5% real discount rate as prescribed by the Office of Management and Budget (OMB). This discount rate is consistent with the federal government's costs of borrowing.

- Fees: The government-owned facilities are assumed to be operated and managed by private corporations or utilities on a fee basis. The contractors' annual fee for the plutonium processing and the MOX fuel fabrication facility is calculated as 2% of the annual recurring costs. The reactor operator receives a fee of $25M per reactor pair per year for the first 5 years followed by $10M per reactor pair per year thereafter. This is consistent with the other reactor options. The lower annual cost in the sixth year onward reflects decreasing financial risk after 5 years of successful MOX operations.

- Comparison with cost information in the *Technical Summary Report (TSR) for Surplus Weapons-Usable Plutonium Disposition:* In the TSR, costs or benefits for negotiable or business-related cost categories were assumed to be zero. In this report, however, these categories are costed; a table comparing the TSR partially complete reactor case and this RASR PCLWR case are presented. The three costed categories are as follows:

  — the incentive fee to a utility for MOX irradiation operations in a private facility or the management fee to an O&M contractor for MOX irradiation operations at a GoCo facility;

  — the salvage value to the government for the sale of the reactors to a utility after the 16 years of MOX operations; and

  — the sharing of electricity revenues with the utility from which the partially complete reactors were transferred (at no transfer cost to DOE-FMDP).

Appendix D
Safeguards and Security Analysis Approach

D.1 Introduction

S&S concerns are of two basic types. The first concern has to do with the potential for theft and diversion of materials by disgruntled employees, "unauthorized" groups such as terrorist and subnational organizations, and aspiring nuclear states. The second concern has to do with the threat that the "host" nation (presumably the United States or the Russian Federation) might retrieve the dispositioned plutonium form, extract the plutonium, and reuse the material for weapons production.

D.2 Resistance to Theft or Diversion by Unauthorized Parties

Evaluation Criteria—This metric was developed to address the risk of theft of weapons-usable nuclear material primarily during transportation, storage, and processing, as well as the risk of theft after disposition is completed. The threat was presumed to be theft by terrorists, subnational groups, or aspiring nuclear states, in addition to potential theft by disgruntled employees. This threat can be reduced by minimizing the handling and processing of the material and applying effective S&S measures. Important characteristics included the inherent attractiveness of the weapons-usable material, the number of transportation steps and sites involved, and the number and characteristics of the processing steps that influence the effectiveness of standard S&S practices. The transportation, storage, and processing of the material must meet the Stored Weapons Standard[1] and the condition after disposition must meet or exceed the proliferation resistance of the SFS.[2] Factors considered when applying this criterion were the following:

- **Low inherent attractiveness:** This factor favored alternatives that minimize the attractiveness of the physical, chemical, or isotopic makeup of the nuclear material during processing, transportation, or storage. The risk of theft (or weapons use) is reduced if material is available only in small quantities and/or is in a physical and chemical form that makes recovery difficult.

- **Minimization of transportation and number of sites:** The more complex the logistics, the more opportunities there are for theft. Disposition scenarios that involve very complex logistics with many transfers and storage locations, with attendant transportation requirements, were considered to be more vulnerable to theft.

- **S&S assurance:** The effectiveness of the S&S protection depends on the form of the fissile material and the characteristics of the processes and facilities involved in the storage and disposition activities.

Applicable S&S Requirements and Measures—The S&S requirements for this alternative are primarily driven by the attractiveness of the material as defined in DOE Order 5633.3B (Table 2.12) and/or 10 CFR Parts 73 and 74. Every facility in this alternative (e.g., plutonium processing, MOX fuel fabrication and reactors) except the repository will be a Category I facility. Information about the flow of plutonium through this alternative and a description of the material and its attractiveness level are provided in Chap. 2. A number of different forms are received by the PuP facility (attractiveness levels IB to IID, see Table 2.12). This material is converted into PuO_2 (IC), which is sent to the MOX fuel fabrication facility. At the MOX fuel fabrication facility the PuO_2 is made into fuel, but the attractiveness level (IC) remains the same. A single fuel assembly contains more than 6 kg of plutonium and therefore meets the criteria for Category I. The presence of fresh MOX fuel is the primary factor that will affect S&S areas for the reactor facilities. Once the MOX fuel has been irradiated, the S&S requirements/procedures should not be significantly different from what is currently required at existing reactors. Highly irradiated MOX fuel (e.g., a radiation dose rate in excess of 100 rem/h at a distance

---

[1] The Stored Weapons Standard was selected by NAS to mean that, to the extent possible, the high standards of security and accounting applied to the storage of intact nuclear weapons should be maintained for these materials throughout dismantlement, storage, and disposition.

[2] The SFS was defined by NAS to mean that alternatives for the disposition of plutonium should seek to make this plutonium as inaccessible or unattractive for weapons use as the much larger and growing stock of plutonium in civilian spent fuel.

cilities in
2.11, 2.23,
erning
hin this
tion
ble 3.7
is is quali-
efined later

mu made of
ms e nec-
e

enhanced entran ersonnel, v
cles, and hand-c tected area
portals will typic ors, SNM
detectors, and pe ay machines for hand-
carried items. If be stored, t
storage area mus vault-type
room, which me ced barrier
access control, a etect
penetration.

tics, physi-
the state
rage affect
mplex the
er of steps,
more opportunities
inaccessible the
ge locations), the
heft. Throughput is
erations involving
aterial is in discrete

Possible Diversion, Theft, or Proliferation

veness is based si-
(isotopic and ra
r material duri
cessing, transp on, or storage. The r
for weapons u educed if material is
only in small c ies, i
chemical form trix
cult, or is isot y una
attractiveness

national groups, crim nd disgruntled
ees. Protection of the l and information
ese parties is a domes onsibility, not an
ional one. It is intern recognized that
on against these threa ate's right and

is the primary basis for evaluating the material form. The presence of other fissile nuclear material, particularly in a separated form, will affect opportunities for possible diversion of plutonium.

- **S&S Assurance:** The effectiveness of S&S protection depends on the form of the material, the physical protection characteristics of the processes, facilities involved in the storage and disposition activities, and the material measurement systems being applied.

Ability to Achieve the SFS—The "SFS" means that the material is comparable to existing spent fuel at commercial reactors with respect to its environment, material form, and S&S. The plutonium in MOX spent fuel is as difficult to divert or steal as plutonium in commercial spent fuel. In fact, since the origin of the MOX fuel is from weapons material, there is a good chance that this material may have increased visibility with respect to safeguards. *The final disposition form for this alternative meets the SFS.* Both significant extrinsic (facility) and intrinsic (related to the material form) safeguards exist. Since the radiological barrier is time dependent, this attribute will, over a long period of time, decrease, and the material will not be self-protecting. Before the irradiation of the fuel assemblies, the material does not meet the SFS, and therefore, protection commensurate with its attractiveness level must be provided.

S&S Transportation-Related Issues—Transportation of SNM such as plutonium exposes the materials to threats of theft and diversion outside the controlled areas of secured nuclear facilities. These threats are addressed by DOE and the NRC through implementation of requirements for administrative controls on transportation planning, preparations, activities, and oversight, and through the use of advanced technologies for payload security and shipment monitoring. NRC established regulations in 10 CFR, Sect. 73.37, requiring implementation of measures to ensure that shipments of SNM are secured from theft and diversion during transport. The measures include provisions for specially equipped transportation vehicles that become immobile if subjected to a diversion threat; frequent and planned communications between an in-transit shipment and the shipper facility; location monitoring and reporting of shipments on an every 2-h basis; armed escorts; security-cleared vehicle operators and escorts; and route planning approved in advance by the NRC.

Safeguarding and security for DOE shipments of weapons-usable materials, such as plutonium, are governed by DOE Order 5632.2B. This order specifies the levels of security that are required for varying quantities and types of materials that are shipped. SST vehicles are to be used for the shipment of all materials classified as Category I materials (weapons assemblies, pure products, and high-grade materials). Category II materials, which are all materials that could be used with little technological effort to produce a nuclear weapon (weapons-usable materials), are also required to be transported in SSTs unless these materials have been provided with diversion resistance. Plutonium materials associated with the RxAT alternatives, except SNF, are believed to all fall into the Category I or II classifications, thus requiring SST level of transportation security. The technical features of the SST system are necessarily classified to protect its effectiveness in preventing theft or diversion of materials that are shipped. In general, however, SSTs provide an extremely resistant barrier to intrusion into the vehicle's closed cargo area where packages of plutonium materials will be carried. Minimizing the number and/or duration of the transport steps is desirable.

D.3 Resistance to Retrieval, Extraction, and Reuse by the Host Nation (Applies to Disposition Only)

Evaluation Criteria—One goal of the program is to make it unlikely that the surplus weapons-usable materials could be reused in weapons. High resistance to retrieval would provide other nations with the confidence that a relatively large resource expenditure (cost and time) would be required to reconstruct the stockpile from dispositioned material. Barriers to reuse result from the form of the material, physical location of the material, and institutional controls (such as IAEA safeguards). A goal of disposition is to reduce reliance on institutional controls.

Modification of the weapons-usable material to make it as difficult to use for weapons production as plutonium contained in spent commercial reactor fuel would make the proliferation and rearmament threat associated with the surplus weapons-usable materials no greater than the threat resulting from plutonium in spent fuel. When modified, the surplus weapons-usable materials would not require a unique level of domestic and international safeguards.

een converted into a declassified form, making it vailable for the IAEA, and the use of modified IAEA afeguards until the material is unclassified.

'ossible **Diversion, Reuse, and Retrieval Risks**—As entioned above, the threat for this criterion is the ost nation. Although the host nation may choose to se overt measures to obtain material and/or weapons esign information, the greatest concern is with covert ttempts. Because the state has responsibility for hysical protection and MC&A, the IAEA will seek to ndependently verify material accounting. C/S com- lements the material accountability measures. The ulnerability to diversion is dependent on the envi- onment, material form and safeguards measures, and e ability to retrieve and convert the material into a eapons-usable form. Therefore, if we were to evalu- te each of the facilities for this alternative, there may e some differences. Because of inherent limitations n the accuracy of NDA measurements, there is ncreased risk for diversion at high throughput facili- es. This is where C/S plays an important role in ssuring material accountability. Existing protective easures will help mitigate these risks.

'riterion **Measures**—Again the measures of the nvironment, material form, and safeguards and secu- ty measures contribute to this criterion. Thus, the formation found in Table 2.11 is applicable; how- ver, the capabilities of the adversary (e.g., the host ation) must be considered when this information is nalyzed. The primary measures are the irreversibility f the material forms (e.g., the ability to convert the aterial back into weapons-usable form) and the abil- y to detect diversion, retrieval, and conversion, hich is dependent on material form, the environment, d safeguard measures. The performance measures at would demonstrate effectiveness in this area are in rms of the following:

Difficulty of diversion, retrieval, extraction, and reuse: The difficulty of retrieval of surplus plutonium and its reuse in weapons establishes the timeliness and irreversibility criteria and the level of safeguards required. The material form and location are particularly important measures.

Assurance of detection of retrieval and extraction: The difficulty of detection or diversion of a significant quantity of material depends on material form, environment, safeguards, and the following factors:

- ability to measure material, which includes processing that is under way, accuracy of applicable NDA techniques, the presence of waste streams, classification issues that may prohibit measurement, and whether item accountancy instead of bulk accountancy methods can be applied;
- C/S systems; and
- timeliness of detection.

Ability to Achieve the SFS—The final disposition form for this alternative meets the SFS. Both significant extrinsic (facility) and intrinsic (related to the material form) safeguards exist. Since the radiological barrier is time dependent, this attribute will, over a long period of time, decrease, and the material will not be self-protecting. Before the irradiation of the fuel assemblies, the material does not meet the SFS, and therefore, protection commensurate with its attractiveness level must be provided.

S&S Transportation-Related Issues—For all Category I material, SSTs will be used to move the material between facilities. A secure unloading area must be available to receive and verify the material and send it to the storage area. Only after the MOX fuel has been irradiated will the requirement for SST movement be removed. IAEA safeguards can be applied for SST transportation of plutonium materials. Tamper-indicating devices/seals can be applied to packages containing excess plutonium materials, and the cargo compartments of SST vehicles provide an extremely resistant security barrier. Use of welding to attach seals to an SST would not be permitted because it would compromise security. Inspection of SST loading and unloading that does not require access to design features of the vehicle would also be permitted. Since the characteristics of the SST design must be protected to ensure its mission effectiveness, inspections that use instruments (in particular, equipment that uses radiative power) would be prohibited. However, inspections of tamper-indicating devices/seals and other approved international safeguards devices would be permitted. Monitoring of SST payloads would also be permitted under the condition that such monitoring would not compromise security through tracking of a vehicle's geographic location. Shipment route data and other sensitive data that must be classified to protect the secure operations of SSTs would not be available for IAEA inspection. Inventorying of payloads before shipment and following receipt would be allowed except under conditions that the excess fissile material contains restricted data.

Appendix E
Quantitative Technical Viability Assessment

An early plutonium disposition study by Omberg[1] ontained a proposal for a technical readiness scale. This scale was deficient in four areas: It assumed that cientific feasibility of a concept had been demon-trated. It did not include the final phase of develop-ent, which is commercialization. It did not include he possibility that experimental work and analyses ay be required in order to satisfy safety and/or regu-tory requirements. It appeared to have been based on he assumptions that there were no time lags between arious stages of development; and no allowances ere made for the loss of corporate memory due to chedule delays.

Omberg's[1] scale was modified to include stages related o the demonstration of scientific feasibility; that is, he process under consideration has been demonstrated the laboratory. Scientific phenomena have been onfirmed, and all principles governing the behavior f the process are believed to be known.

Another modification to Omberg's[1] scale was the addition of two final stages to designate that the pro-ess has been commercialized. These stages are the chievement of "final application in the proper oper-ting environment."

To account for the requirements imposed by the need for regulatory approvals, a six-level regulatory status cale is postulated in Table E.1. Since the NRC has ever licensed a PuP facility or a MOX fuel fabrica-ion facility, phases of the NRC approval are difficult o establish. The regulatory procedure for a geologic epository, while formulated, has never been carried to ompletion. Even for reactor certification, the planned cceptance of "one-step" licensing procedures will nvalidate some past experience. For these reasons, the cale shown in Table E.1 is not linked to specific NRC rocedures.

In Table E.2, the regulatory status scale has been ombined with the modified scale from Omberg[1] to orm the reactor alternatives technical viability scale. The utility value reflects the degree of viability of a rocess. A value of one indicates low viability. A alue of 12 reflects the highest degree of viability, that f a currently operating process.

Table E.1. Regulatory assessment scale

Regulatory status level	Definition
1	No contact with a regulatory agency
2	Discussions initiated with a regulatory agency
3	Continuing discussions; experiment/analyses programs defined
4	Continuing discussions; experiment/analyses programs under way
5	Continuing discussions; experiment/analyses programs complete
6	Final approval received from a regulatory agency

A subtle but important point is that the scale in T E.2 is based on the assumption that success is po ble. If a process is viable at the laboratory level b could not be developed into a prototypic process the process is not scaleable to an industrial level) process does not remain at a utility value of four. Instead, the function to be fulfilled by the proces facility must be degraded to a utility value of one scale in Table E.2 is applicable only to processes facilities for which it is possible to progress up th scale.

An assumption of plausibility with respect to oth assessment criteria is necessary for technical vial studies to be conducted independent of other ass ment criteria such as safeguards or economics (i. order to study technical viability, not overall vial of a concept). In performing the technology leve assessments needed for selecting a utility value f Table E.2, one must assume that there are no im ments to technological development due to other teria. This assumption is believed valid as the "screening process" used to select the reactor op

Table E.2. Technical viability scale

Maturity level	Designation	Regulatory status scale	Comment
1	Conceptual	1	Basic principles of the concept, function, and potential application have been proposed.
2	Lab-1	1	Some scientific investigations (calculations and/or experiments) conducted.
3	Lab-2	1	Scientific investigations (calculations and/or experiments) currently under way.
4	Lab-3	1	Scientific feasibility demonstrated.
5	Prototype-1	1	A basic engineering system has been defined to implement technology principles and determine if the system can perform the function in the specific application of interest.
6	Prototype-2	2	Critical functions to the performance of the engineering system have been identified and verified with applicable computer codes or general experimental data.
7	Prototype-3	3	Design trade-offs for the engineering system have been identified to establish a reference design configuration. Initial collection of safety-related data is being performed. Existing technologies are available but have not been applied to this application.
8	Prototype-4	4	The system design is complete. The technology development process begins transition into a technology demonstration. Continued data gathering to support licensing.
9	Prototype-5	4	The technology development process has progressed to integrated system demonstration. Collection of safety-related data is complete. Safety-related analyses continuing.
10	Prototype-6	5	A final design is approved or approval is pending with no outstanding issues of significance. An integrated system has been demonstrated at a scale relevant to the final application in the proper operating environment. Safety-related analyses complete.
11	Commercial-1	6	A facility or process is operational but lacks capacity to perform the mission or has been operational at the desired scale or throughput but is not currently in operation.
12	Commercial-2	6	A facility or process is operational and is available.

E.1 Derivation of a Technical Viability Index

Each facility in each reactor alternative is composed of processes, and each process is at some stage of development. These processes are identified previously in this report and are listed in Table E.3. For each process in each reactor alternative, the degree of technical viability is assessed, based on the categories defined in Table E.2. Each process is evaluated under the assumptions that preceding processes are accomplished successfully (i.e., each process is evaluated independently from all other processes that form the alternative).

The overall figure-of-merit or weighted viability factor for each alternative/variant is derived by summing the

ower

torium
cessing

torium
cessing-
iving

torium
cessing–
l metal
cessing

0.65

average

ugh
rocesses
at Rocky
ed scale (gas
an be given a
ability

torium
cessing–
tion removal

0.6

7

torium
cessing–
PuO_2
cessing

Asses

Table E.3. Technical viability rankings for components of the PCLWR alternative (50SFP2) (cont.)

Process	Weighting function	Maturity level	Reason not lower	Reason not higher
Plutonium processing—halide salts/oxides processing	0.05	5	Salt distillation, laboratory scale only.	Assessment by facility lead.
Plutonium processing—oxidelike materials processing	0.05	5	Hydrochloric acid dissolution, assessment by facility lead.	Assessment by facility lead.
Plutonium processing—alloy reactor fuel	0.05	11	Done commercially at INEL, however, there could be difficulties with the plutonium processing that could reduce this to a maturity level of 7.	Sufficient capacity not available.
Plutonium processing—scrap, slag, and crucibles; impure metal; and plutonium alloys	0.05	5	Hydrochloric acid dissolution, assessment by facility lead.	Assessment by facility lead.
Plutonium processing—clean oxide, impure oxide, and oxide reactor fuel	0.10	12	No processing required.	
Plutonium processing—shipping	1.00	7	Assessment by facility lead.	Assessment by facility lead.
Fuel fabrication—plutonium receiving and storage	1.00	9	Facilities for PuO_2 storage have been built and approved by DOE.	A final design has not been generated.
Fuel fabrication—nonplutonium receiving and storage	0.20	11	Similar facilities exist and are operating, size or scale not a concern.	Facility for this specific purpose is not available.
Fuel fabrication—PuO_2 purification	1.00	6	Critical functions have been identified with experimental data.	Reference design not fully established.

Table E.3. Technical viability rankings for components of the PCLWR alternative (50SFP2) (cont.)

Process	Weighting function	Maturity level	Reason not lower	Reason not higher
Fuel fabrication—feed materials preparation	1.00	4	Assessment by facility lead.	Assessment by facility lead.
Fuel fabrication—fuel pellet fabrication	1.00	6	Critical functions have been identified; some experimental data exist.	Existing technology not available for homogenized MOX, neutron absorber; possible need for new safety data.
Fuel fabrication—fuel rod fabrication	1.00	8	System design (rod materials, diameter, pitch) complete.	More than 10 years since MOX rods fabricated, most recent MOX rod fabrication not LWR, no integrated process demonstration, possible need for additional safety-related data.
Fuel fabrication—fuel bundle assembly	1.00	7	With suitably decontaminated rods, bundle assembly should be the same as for LWR LEU.	System design not complete, more than 10 years since LWR MOX rods fabricated, safety-related data gathering has not continued.
Fuel fabrication—materials recycle	0.50	7	Existing technologies are available but not all have been applied. Reference design envisioned, considerable safety data exist.	System design is not complete.
Fuel fabrication—waste management	0.50	9	Similar systems have been demonstrated.	A final design is not approved; waste content will depend on source plutonium impurities.
Fuel fabrication—bundle shipping	0.20	9	LWR LEU technology applicable, available on greater scale than needed.	Safety-related analyses not complete.
Reactor—fresh MOX storage	1.00	9	LWR LEU technology applicable, available on same scale as needed; sufficient safety-related data available.	Final design has not been approved.
Reactor—fuel storage pool	1.00	12	Existing facility designed for LEU fuel should be applicable for MOX with few or no changes.	
Reactor—core configuration	8.125	7	A reference, LEU core design exists	System design not complete, number, position, and type of control rods must be evaluated.

Table E.3. Technical viability rankings for components of the PCLWR alternative (50SFP2) (cont.)

Process	Weighting function	Maturity level	Reason not lower	Reason not higher
Reactor—spent fuel storage pool	1.000	12	Existing facility designed for LEU fuel should be applicable for MOX with few or no changes.	
Reactor—dry spent fuel storage	1.000	9	Collection of safety data believed complete.	Final design not approved.
Reactor—shipping	0.200	9	LWR LEU technology applicable, system design believed complete.	Safety-related analyses not complete.
Repository—surface, security	0.0625	11	No difference from existing technology.	Sufficient capacity does not exist.
Repository—surface staging area	0.0625	11	LWR LEU technology applicable, available, and licensed.	Transition to technology demonstration not accomplished. Collection of safety not complete for PCLWR fuel design.
Repository—surface receiving bay	0.0625	11	LWR LEU technology applicable, available, and licensed.	Sufficient capacity does not exist.
Repository—surface, handling cells	0.1250	11	LWR LEU technology applicable, available, and licensed.	Sufficient capacity does not exist.
Repository—surface, welding	0.1250	11	LWR LEU technology applicable, available, and licensed.	Sufficient capacity does not exist.
Repository—surface, decontamination	0.0625	11	LWR LEU technology applicable, available, and licensed.	Sufficient capacity does not exist.
Repository—surface, vault	0.1250	11	LWR LEU technology applicable, available, and licensed.	Sufficient capacity does not exist.
Repository—surface, transfer area	0.1250	11	LWR LEU technology applicable, available, and licensed.	Sufficient capacity does not exist.
Repository—surface, cask maintenance	0.0625	11	LWR LEU technology applicable, available, and licensed.	Sufficient capacity does not exist.
Repository—surface, waste treatment	0.0625	11	LWR LEU technology applicable, available, and licensed.	Sufficient capacity does not exist.
Repository—subsurface, emplacement	0.1250	11	LWR LEU technology applicable, available, and licensed.	Sufficient capacity does not exist.

Table E.3. Technical viability rankings for components of the PCLWR alternative (50SFP2) (cont.)

Process	Weighting function	Maturity level	Reason not lower	Reason not higher
Repository—geologic facility postclosure isolation and safety	7.1250	8	Transition to technology demonstration is in progress. System design believed complete.	Integrated system demonstration not achieved. Collection of safety-related data is not complete.
Sum	32.5000	344		
Weighted sum		256.88		
Unweighted viability factor		8.82		
Weighted viability factor[a]		7.90		

[a]Viability factor = weighted sum/sum of weights. A value of 12.0 means the alternative is commercialized; a value of 1.0 means that the alternative exists only on paper.

product of the maturity levels and the weighting function values (from Table E.2) assigned to each of the processes. This sum is then divided by the summation of the weighting function values for all processes. The resulting quotient is the desired figure of merit. Consequently, the highest possible figure of merit or an alternative is 12. The lowest possible value is 1.0.

Several of the subjective weighting values listed in Table E.3 differ from unity. Justifications for all nonunity assignments are provided below.

The nonunity plutonium processing weight functions were defined on the basis of the relative quantities of material expected to be received at the processing facility. That is, 65% of the material is expected to be in the form of metal; 35%, in other forms. Only the metal materials will require removal of gallium.

The fuel fabrication nonplutonium receiving and storage functions were judged to be equivalent in function and difficulty-of-design as existing facilities and were assigned a weight much less than one. The fuel fabrication materials' recycle and waste management processes were judged less important than the other fabrication processes because problems or delays in performing these functions could occur without necessarily interrupting the fabrication of MOX fuel. The assignment of 0.5 reflects that these are lesser but still important functions. Shipping of fresh fuel to the reactor and spent fuel from the reactor were judged to be relatively simple items to commercialize and were assigned a weight of 0.2.

The reactor core configuration was assigned a large weight (25% of the sum of all weights) because it is *the process* by which the weapons-usable plutonium characteristics are modified to be similar to spent fuel from commercial reactors. All reactor processes, except core design, were assigned lower weights because of a judgment that the qualification of the BOP was considerably easier to accomplish than the core design.

The sum of the weights for all surface repository processes was set equal to one because of the simplicity of these operations as compared with other processes in the alternative. Certain surface functions were judged by the facility manager to be simpler operations than others, and their weights were reduced accordingly. The repository cask maintenance and waste treatment process values were reduced relative to other surface processes because problems or delays in performing these functions could occur without necessarily interrupting the storage of spent fuel. The subsurface portion of the repository was assigned a large weight (25% of the sum of all weights less the sum of the repository surface processes) because recovery from failure of this process would be more difficult than recovery from the failure of other processes.

Though not considered in the current work, a different weighting for the subsurface portion of the repository would be required for other plutonium disposition options (immobilization or storage in a borehole) being studied by DOE. Whereas the reactor core design process achieves the goal of transforming weapons-usable plutonium for the reactor options, plutonium/fission product vitrification and subsurface storage are the principal processes for achieving the disposition goal for the immobilization and borehole options, respectively.

E.2 Reference

1. R. P. Omberg and C. E. Walter, Disposition of Plutonium from Dismantled Nuclear Weapons: Fission Options and Comparison, LLNL, UCRL-ID-113055 (February 1993).

Appendix F
Description of Plutonium Feed Materials

The surplus weapons-usable plutonium is currently stored at multiple sites across the DOE complex, as shown in Fig. F.1. DOE is working on a PEIS to make long-term storage and disposition policy decisions for excess plutonium. Although long-term disposition of plutonium is not expected to start for 10 to 15 years, DOE is actively implementing recommendations of the DNFSB (DNFSB Recommendation 94-1) involving immediate and near-term stabilization and repackaging of plutonium at a number of DOE facilities.

Table F.1 shows a breakdown of plutonium inventories (by site and form) that are excess to national security needs. Figure F.2 shows a graphical representation of the breakdown of (a) weapons-grade and (2) reactor- and fuel-grade plutonium by form. Storage options under consideration include (1) upgrading all present plutonium storage facilities, (2) consolidating all excess plutonium at a single location, and (3) consolidating excess plutonium at multiple storage locations (while closing some present locations).

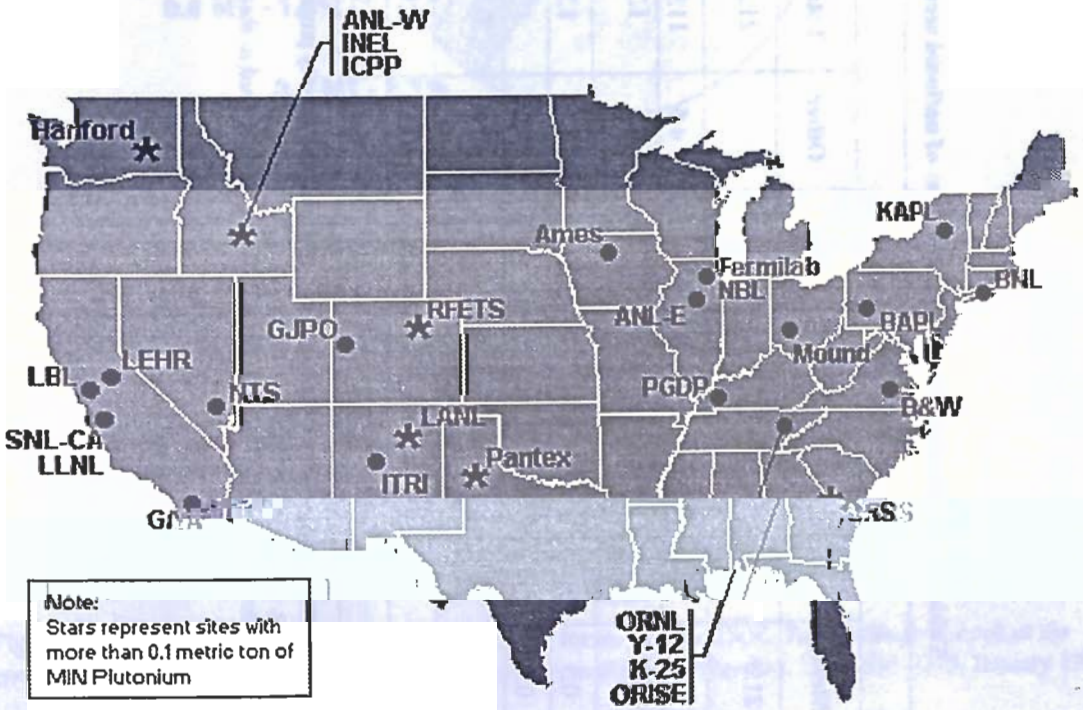

Figure F.1. Geographic distribution of DOE sites storing surplus plutonium. *Source:* DOE, *Taking Stock: A Look at the Opportunities and Challenges Posed by Inventories from the Cold War Era,* DOE/EM-0275, January 1996

Table F.1. Plutonium inventories in excess of national security needs[a,b] by site and form

Site	Weapons grade						Reactor and fuel grades			Total plutonium inventory
	Metal	Oxide	Unirradiated fuel	SNF	Other	Total	Separated (all forms)	SNF	Total	
Pantex plus planned dismantlements	21.3					21.3				21.3
Rocky Flats	5.7	1.6			4.6	11.9				11.9
Hanford Site (PNL and Hanford)	<0.1	1		0.2	0.5	1.7	2.9	6.4	9.3	11
LANL	0.5	<0.1	<0.1		1	1.5	0.3		0.3	1.8
SRS	0.4	0.5		0.2	0.2	1.3	0.4	0.1	0.5	1.8
INEL (INEL, ICPP, and ANL-W)	<0.1		0.2	0.2	<0.1	0.4	3.6	0.4	4	4.4
Other sites	<0.1			<0.1	<0.1	0.1	0.2		0.2	0.3
Totals	27.8	3.1	0.2	0.6	6.4	38.2	7.5	6.9	14.4	52.6

[a]Includes plutonium in SNF and small amounts of plutonium that are in use in nonnational security programs.
[b]Totals may not add because of rounding. Amounts reported in metric tons.
Source: (1) DOE Openness Initiative, February 6, 1996, p. 88; and (2) DOE, *Taking Stock: A Look at the Opportunities and Challenges Posed by Inventories from the Cold War Era*, DOE/EM-0275, January 1996.

EFG 96-7353

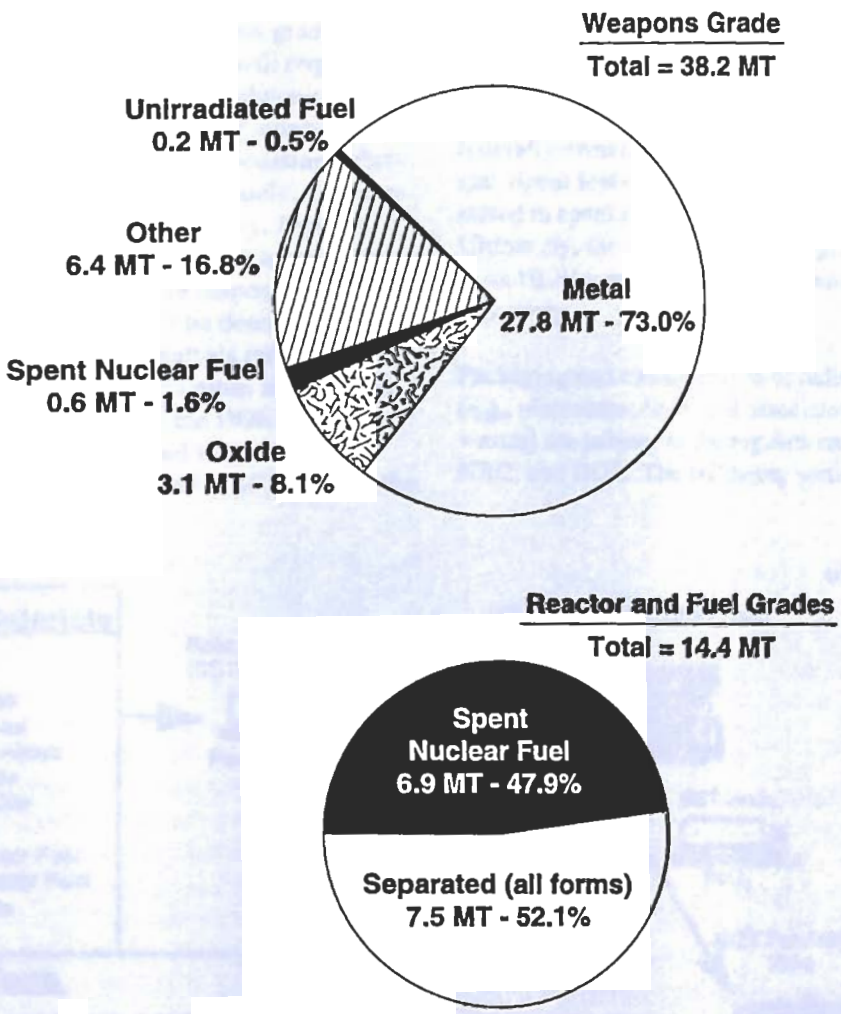

Figure F.2. Unclassified surplus plutonium by form. *Source:* DOE, *Taking Stock: A Look at the Opportunities and Challenges Posed by Inventories from the Cold War Era*, DOE/EM-0275, January 1996

Appendix G
Transportation and Packaging of Plutonium Material Forms

G.1 Overview

Disposition of 50 MT of excess weapons-grade plutonium as MOX fuel in nuclear reactors will require a series of sequential movements of the plutonium from its present locations (storage vaults at a number of DOE facilities) through the various processing, fabrication, and reactor facilities, and ultimately, emplacement as spent fuel at an HLW repository. Figure G.1 provides a simplified flow chart of the transportation segments associated with a reactor disposition alternative. Actual facility locations will be determined by DOE following the ROD. For analysis purposes, it has been assumed that the excess plutonium is in interim storage at many locations within the DOE complex. This material is first packaged and transported to a PuP facility (assumed to be located at SRS), where the material is converted to PuO_2. The PuO_2 is then repackaged and transported to the MOX fuel fabrication plant (assumed to be constructed in an existing building elsewhere on the SRS). Once fabricated, the fresh MOX fuel is packaged and transported to the reactor. These completed reactors are assumed to be federally owned and constructed on an existing utility site. Spent fuel discharged from each reactor is first stored in spent fuel pools at each reactor for 10 years. Ultimately, the spent fuel is packaged and transported to an HLW repository for emplacement in a geologic repository.

Packaging and transportation of radioactive materials (e.g., plutonium, SNF, and associated radioactive wastes) are subject to the regulations of the DOT, NRC, and DOE. The following sections discuss

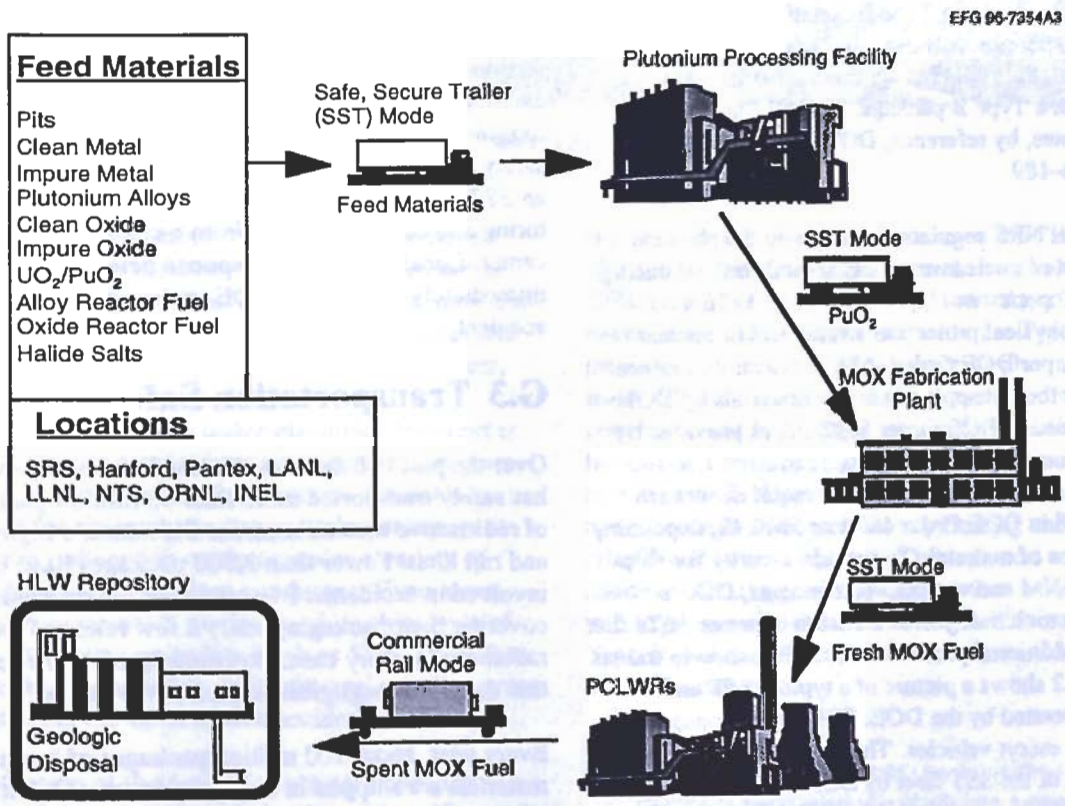

Figure G.1. Simplified flow chart showing transportation segments for reactor alternatives

ve materials. Finally, e

prepara
l nuclea
ase of

program
ckage. 71
nce, DC s 49 CFR , in the unlik

tions pertain to the
aterials at facilitie

ns

d that there was hazard to the public.
DOE anied
T and Every year, a s
udged materials are
irements, tain materials ve,

Figure G.2. SST and tractor operated by DOE

or poisonous. Only about 3% contain radioactive materials used for medical, research, and industrial purposes—mostly medical isotopes. For the most dangerous materials—high-level radioactive wastes and SNF—less than 100 shipments are made each year.

Safety from radioactive materials during transport is provided by using containers that meet strict requirements. Even low levels of radioactive materials are packaged for shipment in strong, tight containers to protect the radioactive contents under a variety of transportation and accident conditions. Even more stringent requirements are imposed on shipments of highly radioactive materials, such as SNF. Spent fuel must be shipped in thick, stainless steel containers that can withstand the most severe accident conditions.

Determination of the type of container needed is a function of the quantity and identity of the radionuclides to be shipped. For shipments containing radionuclides in quantities that exceed the Table of A_1 (for special form) or A_2 (for normal form) values (49 CFR 173.435 or 10 CFR 71, Appendix A), a Type B package is required. Spent fuel casks are Type B packages. For fissile materials, such as plutonium, many different acceptable Type B packages have been certified. Type B packages are carefully reviewed from design to fabrication before certification for use by either the NRC or DOE. Before certification, the container must meet rigorous engineering and safety criteria and pass a sequence of hypothetical accident conditions that create forces greater than a container will experience in actual accidents. Accident tests for Type B packages, administered in sequence, include the following:

- a 9-m (30-ft) free-fall onto an unyielding surface (which is equivalent to a crash into a concrete bridge abutment at 120 mph); followed by

- a puncture test allowing the package to free-fall 1 m (40 in.) onto a steel rod 15 cm (6 in.) in diameter; followed by

- a 30-min exposure at 800°C (1,475°F) that engulfs the entire package; followed by

- submergence of that same container under 0.9 m (3 ft) of water for 8 h.

A separate, undamaged container is also subjected to immersion in 15 m (50 ft) of water for 8 h. For certification, a package must not release any of its contents during the hypothetical accident testing.

Figure G.3 shows the accident tests used for Type B packages. Many different containers have been successfully certified as Type B packages for radioactive materials. Each design provides considerable protection from the accidental release of radioactivity. To demonstrate that Type B packages (such as the robust packages used to transport SNF) can withstand a severe accident, DOE has performed a number of accident tests to simulate severe conditions. In Fig. G.4, the results of a severe accident involving crashing a tractor trailer carrying a package prototype into a massive concrete wall at 81 mph is shown. While the truck was totally destroyed, damage to the package was external and superficial. The package remained intact and did not release any of the material contained within the package. Analyses show that the hypothetical regulatory tests simulate literally all the mechanical and 99% of all thermal conditions that could realistically be experienced in the field. And since these hypothetical tests are performed in sequence, it is felt that the maximum level of conservatism has been achieved.

G.4 Transportation System

The transportation system, as described here, and previously shown in Fig. G.1, will require extensive

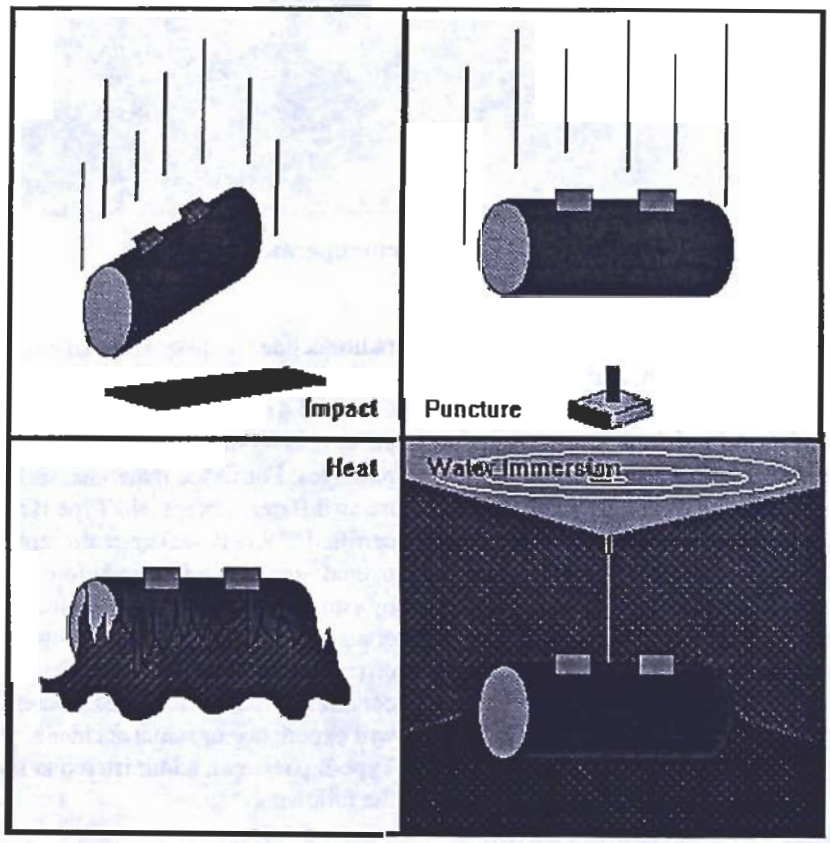

Figure G.3. Accident testing of Type B packages

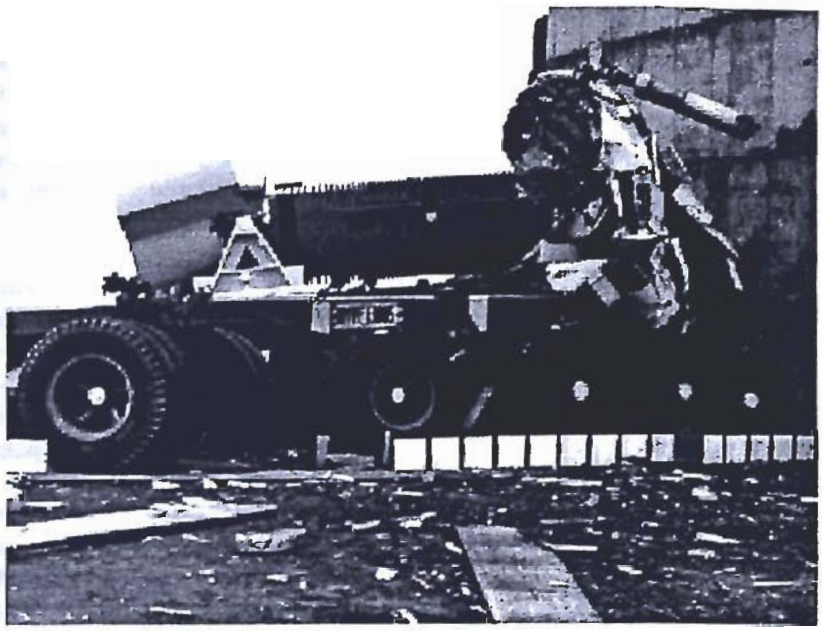

Figure G.4. Spent fuel cask—results of crash testing

use of DOE's SST fleet for the transport of all plutonium materials before their irradiation in the reactor. The quantity of plutonium to be shipped, in whatever form, has been determined to exceed the definition of strategic SNM (Category I). Category I quantities of SNM require the highest level of transport security, using special armored transport vehicles and other measures to ensure security (as specified in 10 CFR Part 73). At present, DOE's SSTs, which exceed the requirements of 10 CFR 73, are the only available packages in the United States. The following sections describe shipment requirements on a leg-by-leg basis.

G.5 Feed Materials Transport Leg

As shown in Fig. G.1, excess fissile materials located at various DOE facilities include pits, clean metal, impure metal, plutonium alloys, clean oxide, impure oxide, UO_2/PuO_2, alloy reactor fuel, oxide reactor fuel, and halide salts and oxides. Because of the variety of materials involved, no single Type B package design is appropriate. Therefore, DOE will utilize a number of different package designs.

Packages. Excess pits from dismantled nuclear weapons under FMDP will be stored and transported in the Model FL or the newer AT-400A container. The various pits can employ these containers by using different internal containers. The remaining (nonpit) weapons-grade plutonium is assumed to be in storage at various DOE facilities. This material is assumed to be stored in a form/storage container that meets the requirements of *The Criteria for Safe Storage of Plutonium Metals and Oxides* stated in DOE-STD-3013. The criteria state that all plutonium metal and oxides (excluding pits) shall either (a) be sealed in a material container nested in a boundary container [until a primary containment vessel (PCV) can be used]; or (b) be sealed in a boundary container nested in a PCV. The design goal for the boundary container (like the traditional crimp-sealed "food can") and the PCV storage package is that the entire package should be maintenance free and be either compatible with a common transport package or transportable without additional repackaging.

Historically, DOE has utilized many different configurations of the DOT Specification 6M packages for the transport of plutonium (nonpit) materials. Such configurations, as specified in the *User's Guide for Shipping Type B Quantities of Radioactive and Fissile Material, Including Plutonium, in DOT 6M Specification Packaging Configurations, DOE/RL-94-68, September 1994*, were approved for use by DOE. The DOT Specification 6M, as defined in 49 CFR 178.354, when used with a DOT Specification 2R inside containment vessel (per 49 CFR 178.360), as a "Specification Package" under DOT regulations is not required to undergo the formal certification process for new package designs. A typical Specification 6M package is shown in Fig. G.5. Figure G.6 shows a

Specif

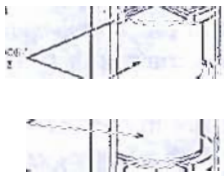

Figure G.6.
containers f

ter
ge

ation 2R inner containers
r NRC regulations, special

ss

separate inner contain

ter

ner must be

A2
of

49 CFR 173.433. Re

ill be
ckages
o the MOX
cation plant
actor opera-
most cases).
placed in a
aign will be
compl
ult could be
accom
fuel fabrica-
tion pl
utilize
excess
that would
be available.

Packages. Double-containment plutonium packages

G.7 Fresh MOX Fuel Transp
Leg

Approximately 1800 PWR, 9000 BWR, or c
100,000 CANDU MOX fuel bundles will be
cated from the 50 MT of plutonium. The M

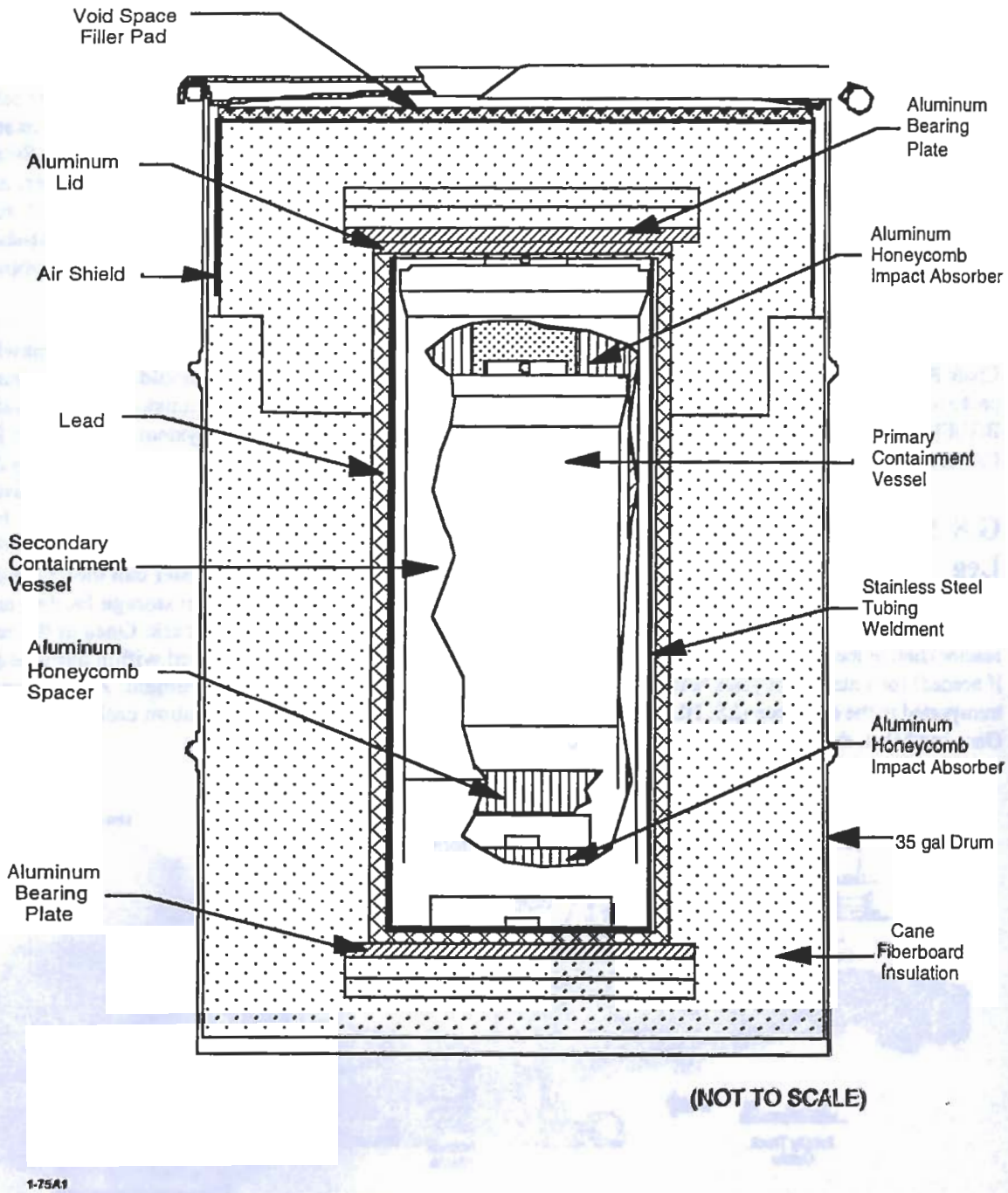

1-75A1

Figure G.7. Cross-section view of 9975 package

required to Fig. G.1

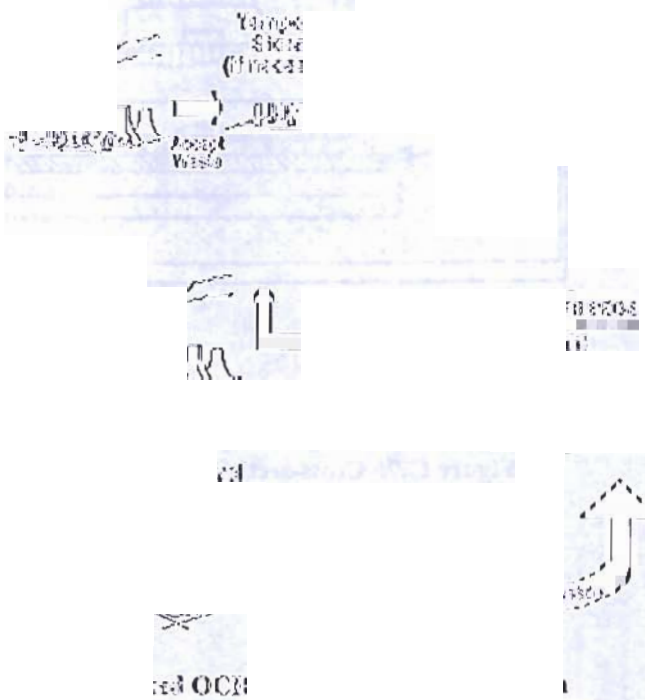

G

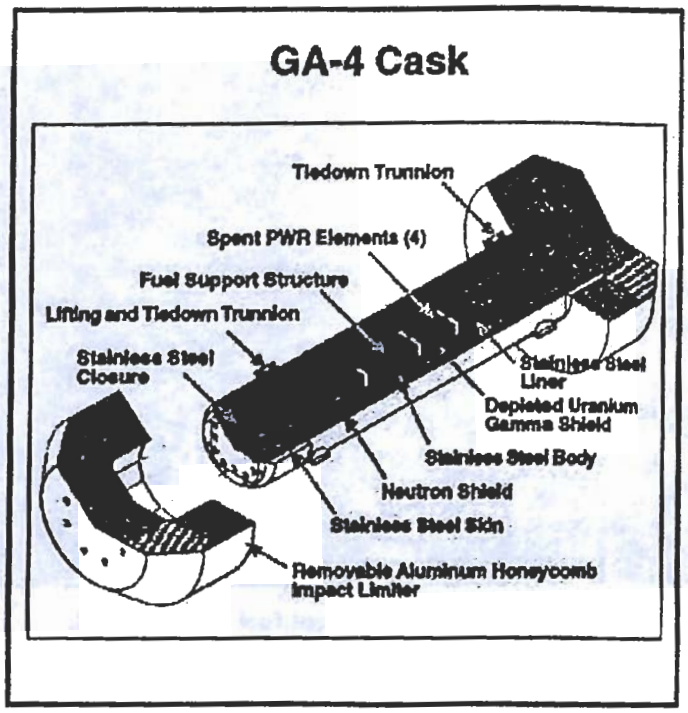

Figure G.9. Schematic of GA-4 truck cask for SNF

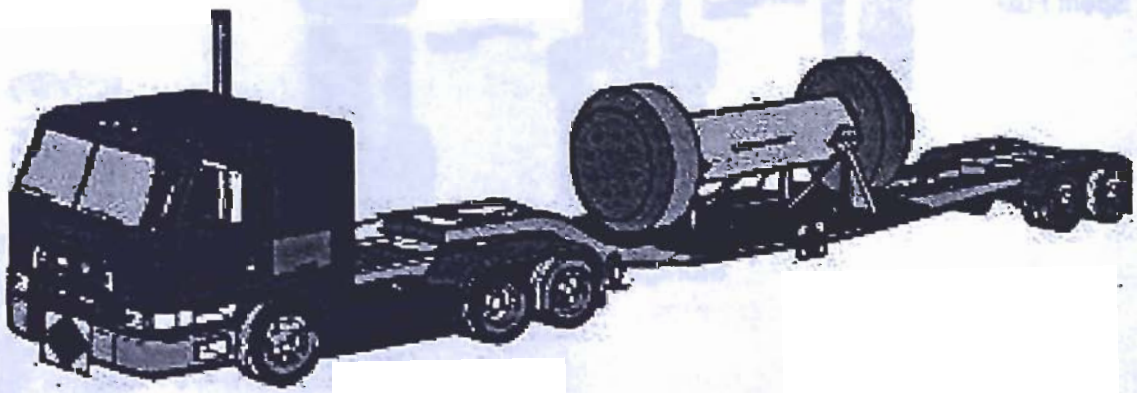

Figure G.10. Representation of GA-4 spent fuel cask loaded on truck

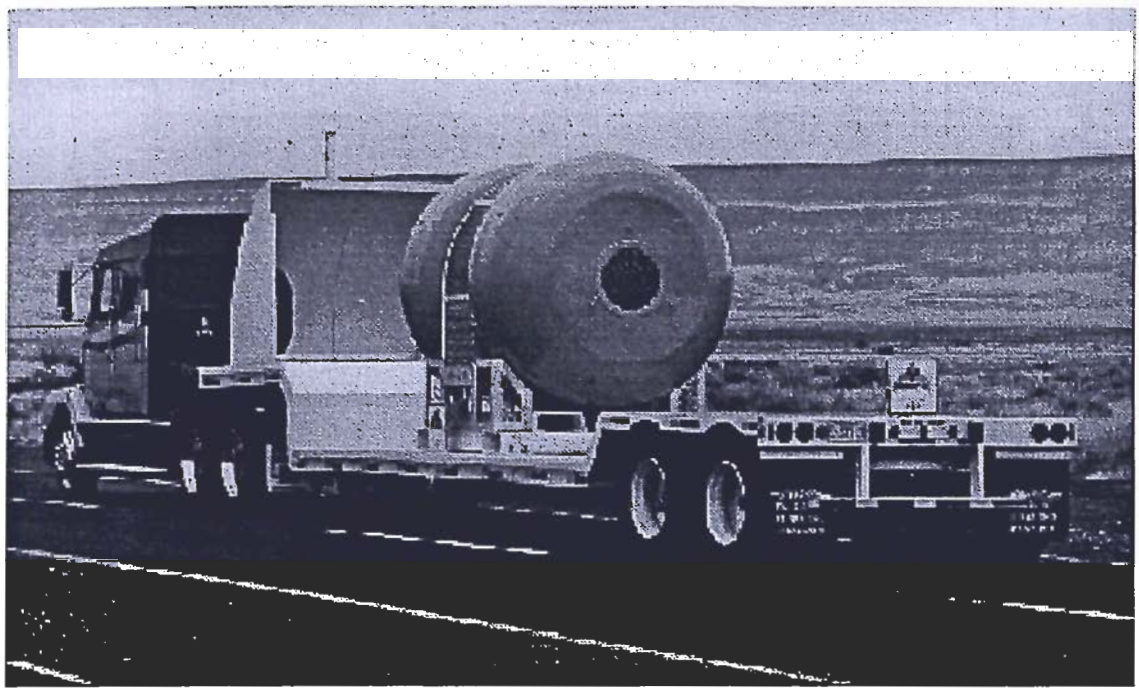

Figure G.11. Photo of spent fuel cask on truck

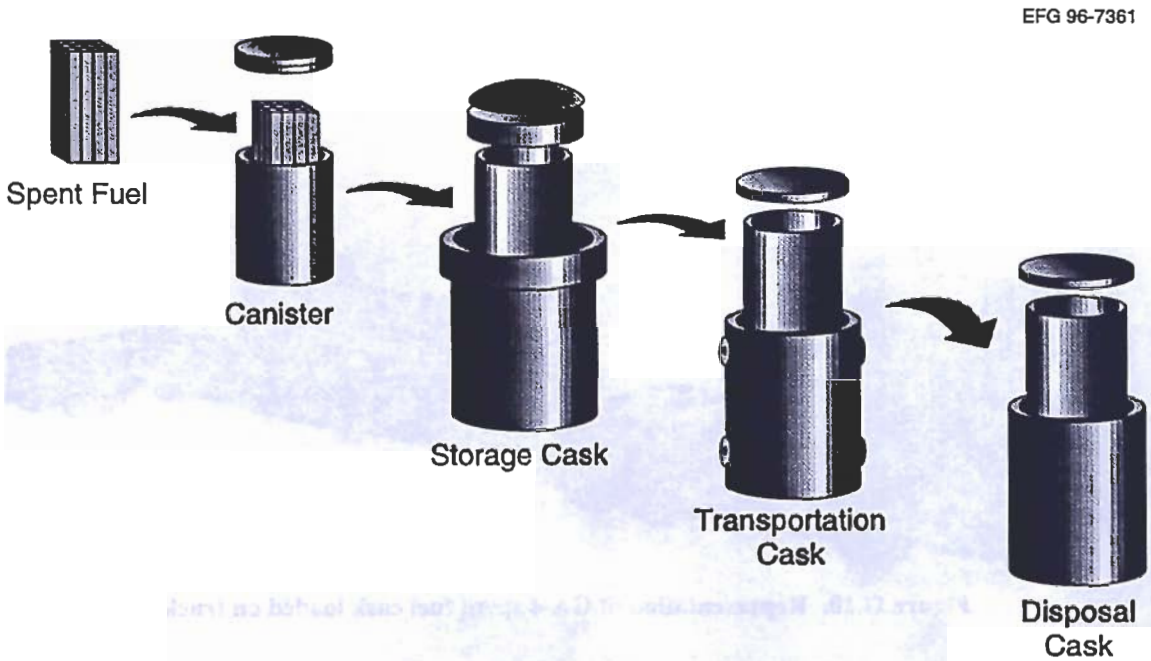

Figure G.12. Representation of canister system

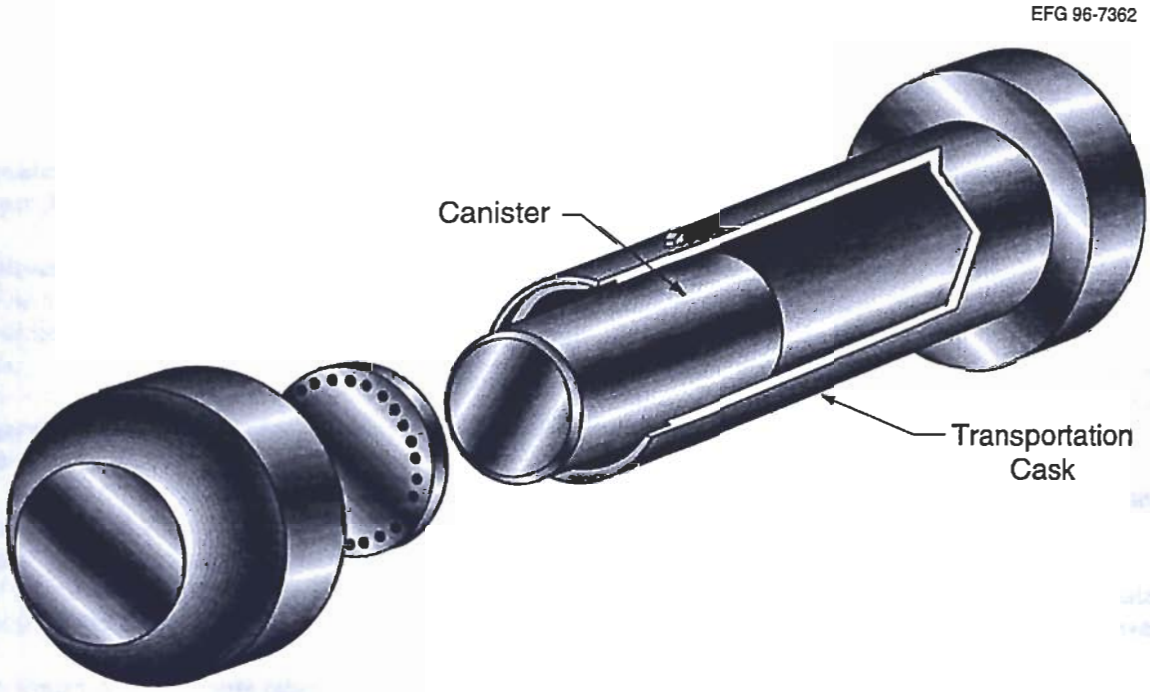

Figure G.13. Schematic of canister and transportation cask

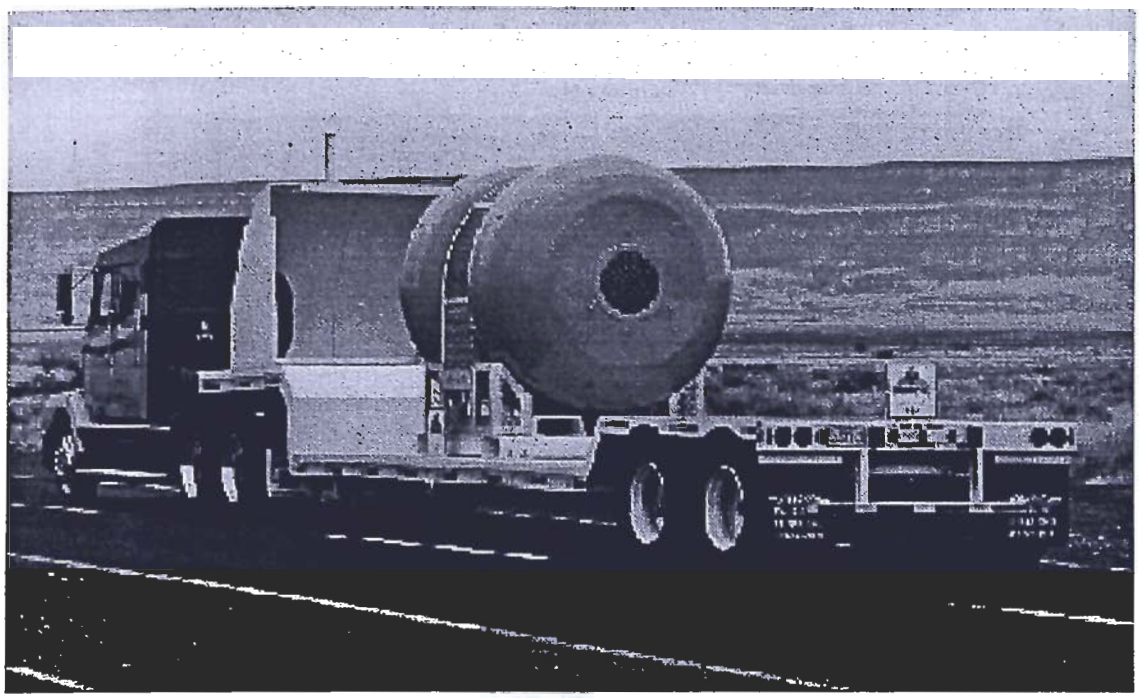

Figure G.11. Photo of spent fuel cask on truck

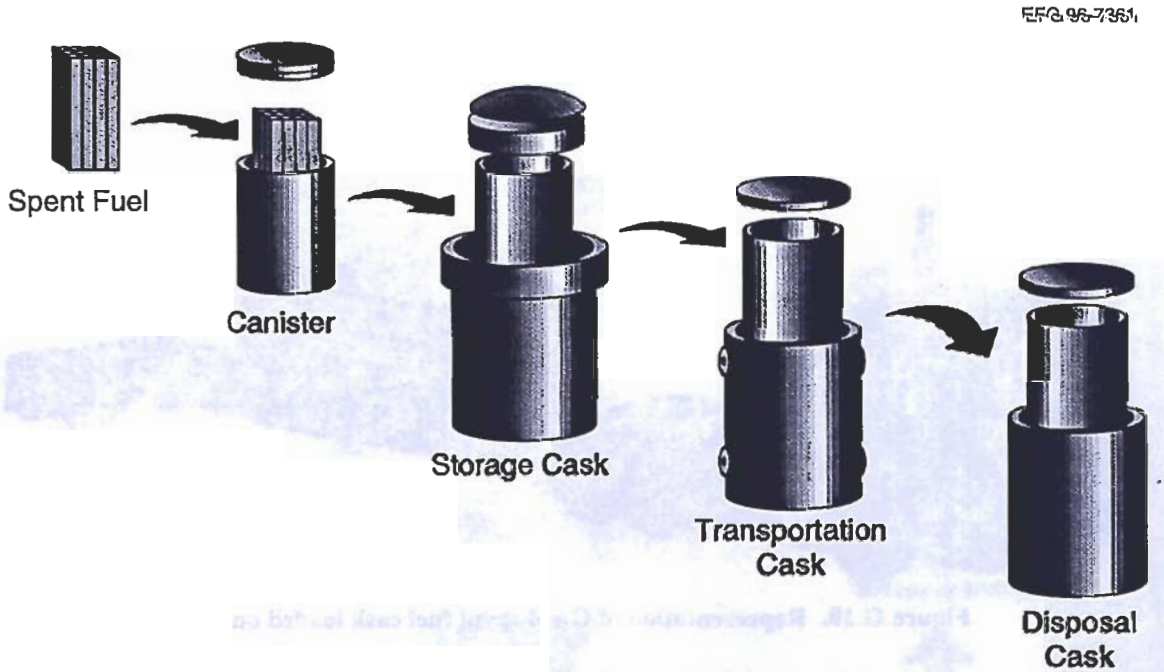

Figure G.12. Representation of canister system

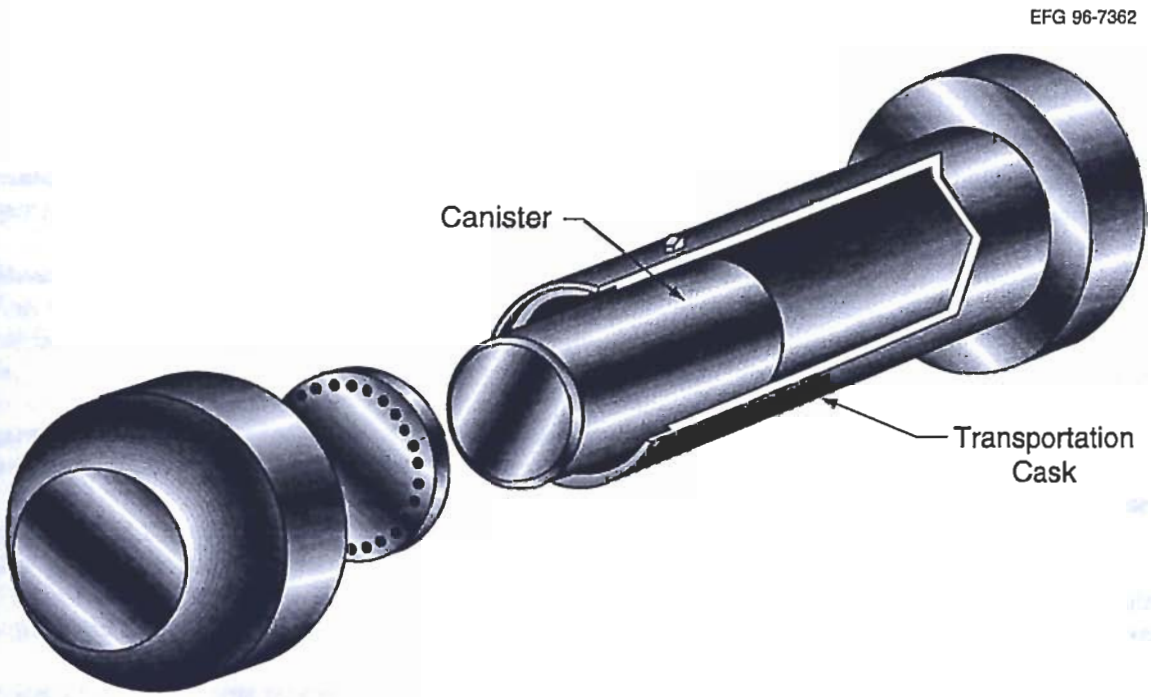

Figure G.13. Schematic of canister and transportation cask

Appendix H
Glossary

Actinides: Radioactive elements with atomic number larger than 88 (i.e., 89 or higher).

Alternative: A term used during FMDP Phase II to define a group of pathways through a baseline set of facilities. Currently "alternative" is defined by reactor type.

Aqueous Process: An operation involving chemicals dissolved in water.

Architect and Engineer Contractor (AE): The organization responsible for incorporating process and manufacturing technology requirements into the design of facilities.

Attribute: A measurable relevant characteristic of an option, such as public acceptability or technical risk.

Boiling-Water Reactor (BWR): BWR is a type of LWR whose primary coolant is permitted to boil. The primary loops are typically under about 1000 psi of pressure.

Burn: To consume fissile materials in a reactor through fission.

Canyon: A remotely operated, heavily shielded plutonium or uranium processing facility.

Construction Contractor: The organization responsible for construction of new or modified facilities.

Conversion: An operation for changing material from one form, use, or purpose to another.

Criticality: Pertaining to a critical mass (the least amount) of fissionable material that can achieve self-sustaining nuclear chain reactions.

Curie: A unit of radioactivity equal to that emitted by 1 g of pure radium.

Deuterium: An isotope of hydrogen used in the fusion reaction of a nuclear weapon.

Disassembly: The process of taking apart a nuclear warhead and removing the subassemblies, components, and individual parts.

Discard: To dispose of material as waste.

Dismantlement: The process of taking apart a nuclear warhead and removing the subassemblies, components, and individual parts.

Disposal: The process of placing waste in an interim or final repository.

Disposition: A process of use or disposal of materials that results in the remaining material being converted to a form that is substantially and inherently more proliferation-resistant than the original form.

Dissolution: The chemical dispersal of a solid throughout a liquid medium.

Fissile: The term "fissile" refers to nuclear materials that are fissionable by both slow (thermal) and fast neutrons. Fissile materials include ^{235}U, ^{233}U, ^{239}Pu, and ^{241}Pu. Materials such as ^{238}U and ^{232}Th, which can be converted into fissile materials, are called fertile materials. It should be noted that ^{232}Th, ^{238}U, and all plutonium isotopes are fissionable by fast neutrons but not by thermal (slow) neutrons. They are not called fissile materials but may be called fissionable materials. The term fissile also refers to material that can support nuclear detonation.

Fission: Fission occurs when a neutron bombards the nucleus of an atom and causes it to split into fragments and release energy.

Fissionable Material: Material whose nuclei fission when bombarded by neutrons.

Formerly Restricted Data: Classified information, defined in the Atomic Energy Act, that is shared by DOE and DoD and is related to the military utilization of nuclear weapons or energy. Decisions to declassify such data must be agreed upon by both agencies.

Fuel Grade: Mixed oxide with a plutonium concentration of 7 to 19%.

Hazardous Material: A substance that poses a risk to health, safety, and property.

Hazardous Waste: Waste that includes toxic materials, reactives, corrosives, flammables, and explosives. These materials can damage living tissue; they can pose a variety of health hazards and cause a wide range of effects.

Heavy Metal: Heavy metal refers to all the isotopes of Th, U, Np, Pu, Am, and Cm.

High-Level Waste (HLW): Highly radioactive waste material from the reprocessing of spent nuclear fuel (including liquid waste produced directly in reprocessing and any solid waste derived from the liquid) that contains a combination of transuranic waste and fission products in concentrations requiring permanent isolation. DOE is responsible for disposing of all HLW in the United States. HLW is highly radioactive and must be handled from behind heavy protective shielding.

Highly Enriched Uranium (HEU): Uranium enriched in the isotopic content of ^{235}U to greater than 20%, a concentration range usable for nuclear weapons.

Integral Fuel (or Depletable) Neutron Absorber: The excess reactivity, which is included in a fuel reactor to obtain a desired cycle length, can be reduced by the use of a integral fuel neutron absorber. This is an isotope having a large-absorption cross section, which is converted to an isotope of low-absorption cross section as the result of neutron absorption. The increase in reactivity due to the burnup of this neutron absorber compensates (to some extent) for the decrease in reactivity due to fuel burnup and the accumulation of fission-product poisons.

Interagency Working Group on Plutonium Disposition (IWG): An interagency group established by the President of the United States to conduct a comprehensive review of the options for disposing of surplus plutonium from nuclear weapons activities of the United States and the former Soviet Union.

Interim Storage: Safe, controlled, inspectable storage facilities and conditions that will be established in the near term and will remain in effect until the long-term storage or disposition actions are implemented.

Light-Water Reactor (LWR): There are two types of LWRs. One is a pressurized-water reactor (PWR) and the other is a BWR. Both are thermal reactors. All commercially operating reactors in the United States and most commercial reactors worldwide are LWRs.

Light-Water Reactor (Full MOX Fuel): An LWR with full MOX fuel rods, each containing a mixture or blend of UO_2 and PuO_2. Traditional programs of using plutonium in LWRs use partial, not full, MOX fuel.

Light-Water Reactor (Partial MOX Fuel): An LWR with partial MOX fuel contains some fuel rods that are blended with UO_2 and PuO_2 and some that only contain UO_2. The blended uranium and plutonium oxides typically account for one-third of the total number of fuel rods.

Low-Enriched Uranium (LEU): Naturally occurring uranium contains only about 0.7% ^{235}U and almost all of the rest is ^{238}U. LEU is enriched in the isotopic content of ^{235}U, greater than 0.712% but less than 20% of the total mass, for use as LWR fuel.

Low-Level Waste (LLW): Radioactive waste not classified as high-level waste, transuranic waste, spent nuclear fuel, or by-product material.

Management and Operating (M&O) Contractor: The organization responsible for process operations.

Metal: Plutonium ingots or buttons that have not been fabricated into parts.

Mixed Oxide (MOX): MOX refers to a physical blend of UO_2 and PuO_2.

Mixed Waste: Waste that is a combination of radioactive and hazardous materials.

More specifically, the Federal Facility Compliance Act (FFCA) of 1992 defines mixed waste as containing both hazardous waste and source, special nuclear, or by-product material subject to the Atomic Energy Act. Therefore, the term "mixed waste" does not include all hazardous waste containing radionuclides. For example, it does not include hazardous waste containing naturally occurring or accelerator produced radioactive material.

Natural Uranium: Uranium with ^{235}U concentration of 0.711%, the average concentration of ^{235}U in uranium in the natural, pre-enriched state.

Operation-Funded Project Cost (OPC): The portion of total project cost (TPC) budgeted with operating funds rather than congressional line item funds.

Operations Office: The on-site DOE organization responsible for management and oversight of production facilities, M&O contractors, and DOE laboratories.

Option: Term used during FMDP screening process to define a group of related alternative pathways through a specific set of facilities that takes surplus fissile material to complete disposition. See Alternative.

Oxidation: A chemical reaction in which, typically, an oxide is formed.

Oxide: A compound in which an element (such as plutonium) is bonded to oxygen.

Plutonium Pit: The core element of a nuclear weapon's "primary" or fission component. Pits are made of weapons-grade plutonium, principally ^{239}Pu, and surrounded by some type of casing.

Plutonium: Man-made element produced when uranium is irradiated in a reactor. Plutonium-239 is the most suitable isotope for constructing nuclear weapons.

Pressurized-Water Reactor (PWR): A PWR is a type of LWR whose primary coolant is not permitted to boil. The primary loops are typically under about 2000 psi of pressure.

Process: To extract, separate, or purify a substance by physical or chemical means (e.g., to remove actinides).

Proliferation: The spread of nuclear, biological, and chemical capabilities and the missiles to deliver them.

Rad (radiation absorbed dose): A basic unit of absorbed dose of ionizing radiation representing an amount of energy absorbed per unit of absorbing material, such as body tissue.

Radioactive Waste: Any waste material or combination of waste materials (solid, liquid, or gaseous) that contain radionuclides regulated under the Atomic Energy Act.

Radionuclide: Certain natural and man-made atomic species with unstable nuclei that undergo spontaneous breakup or decay and, in the process, emit alpha, beta, or gamma radiation.

Reactor-Grade: Plutonium with a ^{240}Pu concentration greater than 19%.

Recast: The process of melting metal and casting into a mold.

Record of Decision (ROD): A concise public document, issued no sooner than 30 d after completion of a final environmental impact statement or programmatic environmental impact statement, stating the agency's decision on the proposed action evaluated in the document. The ROD is not considered to be an environmental document since the decision may consider other factors in addition to environmental ones.

Rem (roentgen equivalent, man): Unit of biological dose equivalent. The dose equivalent in "rem" is numerically equal to the absorbed dose in "rad" multiplied by necessary modifying factors.

Reprocessing: The chemical separation of spent reactor fuel into uranium, transuranic elements, and fission products.

Residue: Recoverable by-product from a manufacturing or purification process.

Restricted Data: Classified information defined by the Atomic Energy Act. Restricted Data are born classified, regardless of source.

Special Nuclear Material (SNM): As defined in the Atomic Energy Act," 'special nuclear materials' means (1) plutonium, uranium enriched in the isotope U^{233} or in the isotope U^{235}, and any other material which the Commission . . . determines to be special nuclear material, but does not include source material . . ."

Spent Fuel Standard (SFS): A disposal standard whereby weapons-usable plutonium is made as unattractive and inaccessible for retrieval and weapons use as the residual plutonium in spent fuel from commercial reactors.

Spent Fuel: Irradiated reactor fuel that is no longer useful as fuel.

Stabilize: To convert a compound, mixture, or solution to a nonreactive form.

Staging: An interim storage or gathering of items awaiting use, transportation, consumption, or other disposition.

Storage: Any method of keeping items while awaiting use, transportation, consumption, or other disposition.

Stored Weapon Standard: A level of security and accountability that is equivalent to that afforded a stored nuclear weapon.

Technology: A specific technical component that is a subset of a facility (e.g., use of the ARIES process to convert plutonium metal to PuO_2 as a step in the PuP facility).

Total Estimated Cost (TEC): The portion of total project cost (TPC) budgeted with congressional line item capital funds.

Total Project Cost (TPC): The total of all "up-front" investment costs (TPC = OPC + TEC) required to bring a facility into full-capacity operation. TPC may include planning, R&D, ES&H studies, site qualification, QA, permitting, safety analysis, design, construction, project management, initial spare parts, start-up, and staff training.

Transparency: Exchange of information, access to facilities, and cooperative arrangements undertaken to provide ready observation and verification of defense or other activities.

Transuranic: Any element whose atomic number is higher than that of uranium. All transuranic elements are produced artificially and are radioactive.

Treatment: An operation necessary to prepare material for disposal.

Tritium: A radioactive gas, an isotope of hydrogen, that serves as a booster for the fusion reaction in the secondary component of a nuclear weapon.

Variant: Term used to define a different specific set of facilities within a baseline alternative.

Vitrification: Process of immobilizing radioactive material by encapsulating it into a glasslike solid.

Warhead: Explosive part of a nuclear weapons system. Warheads consist of nuclear materials, conventional high explosives, and related firing mechanisms.

Waste: A discardable residue from a manufacturing or purification process.

Weapons-Grade: Plutonium with a ^{240}Pu concentration less than 7%.

Weapons-Usable Fissile Materials: A specific set of nuclear materials that may be utilized in making a nuclear explosive for a weapon. Weapons-usable fissile materials include uranium with ^{235}U isotopic content of 20% or more plutonium of any isotopic composition, and other special nuclear materials. The term "weapons-usable fissile materials" does not include the fissile materials present in spent nuclear fuel or irradiated targets from reactors.

TERNA

15. S.
16. M
17. S.

aels 44.
er 45.
es 46.-47.
onnor 48.

EXTERNAL DISTRIBUTION

ms, ANRCP, Texas A&M Nuclear Engineering, Zachry 129, College
X 77843.
trout, Lawrence Livermore , P.O. Box 808, MS-L165, Livermore, CA

Los Alamos National Lab 63, M 7545.
1653, 87545.
ion A Washington,

r, U.S. Department of Ir SW Washington, DC

s, Bellefonte Nuclear Station, P dwy. 72, Hollywood, AL 35752.
rk, DOE, Oak Ridge Operations 8, Oak Ridge, TN 37831-6269.
, W 04-16B, Room 10, Aiken, SC 29808

63.
ox 1663, MS-B513, Los Alamos, NM 87545
Box 1663, MS-A102, Los Alamos, NM
62. A. J. Cygelni 0 Independence Avenue, SW, Washingto
20585.
63. G. A. Davis MC-9 Windsor, CT 06095.

Room 5A-

20585.

Washington, DC 20502.

D. L. Mangan, Sandia National Laboratories, P. ... querque, NM 87185.

S. R. Martin, Jr., DOE, Oak Ridge Operations, ... 269.

M. F. Meigs, British Nuclear Fuels, Inc., 1776 ... DC 20005-3700.

R. C. Miles, Bellefonte Nuclear Station, P.O. Box 2000, Hwy. 72, Ho ... 52.

F. E. Motley, Los Alamos National Laboratory, P.O. Box 1663, MS-I ... , NM 87545.

... 185-0763.

... COGEMA, 7401 Wisconsin Avenue, Bethesda, MD ...

... 1663, MS-E510, Los Al... NM 87545.

... 1000 Independe... estal Bldg., Room

... , DC 20585.

... Ontario Hydro, 700 University Avenue, H16 F11, Toronto, Ontari... ada M5G 1X6.

... Paone, General Electric Co., P.O. Box 780, M/C A16, 3901 Castle Hayne ... Wilmington, NC

1. S. L. Passman, Sandia National Laboratories, 1401 Wilson Blvd., Suite 1050, A... n, VA 22209.
2. K. L. Peddicord, ANRCP, Texas A&M University, Zachry 120, College Station, ... 7843-3113.
3. D. Peko, U.S. Department of Energy, MD-3, 1000 Independence Avenue, SW, W...
4. ... a, Sandia National Laboratories, P.O. Box 969, MS-9015, ... , CA
5. ... epartment of Energy, MD-3, 1000 Independ... e, S...

106. G. P. Rudy, U.S. Department of Energy, 1000 Independence Avenue, SW, Room 7B192, Washington, DC 20585.
107. S. S. Sareen, TRW, Inc., 2650 Park Tower Drive, Suite 800, Vienna, VA 22180.
108. J. I. Saroudis, AECL Technologies, Inc., 1155 Metcalfe Street, Montreal Quebec, Canada H3B 2V6.
109. F. Shallo, COGEMA, 7401 Wisconsin Avenue, 5th Floor, Bethesda, MD 20814.
110. R. H. Steele, MPR Associates, Inc., 320 King Street, Alexandria, VA 22314-3238.
111. M. Stern, Fluor Daniel, Inc., 1100 Wilson Blvd., Suite 800, Arlington, VA 22209.
112. I. Kent Sullivan, Westinghouse Savannah River Company, Bldg. 773-41A, Aiken, SC 29808.
113. J. W. Toevs, Los Alamos National Laboratory, P.O. Box 1663, MS-F628, Los Alamos, NM 87545.
114. M. Travis, Westinghouse Electric Corp., 4350 Northern Pike, Monroeville, PA 15146.
115. Y. Vanderborck, Belgonucleaire, Avenue ARIANE 4, Bruxelles, Belgium, B-1200.
116. D. Wadekamper, General Electric Co., 175 Curtner Avenue, San Jose, CA 95125.
117. C. Westbrook, Tetra Tech, 5203 Leesburg Pike, Suite 900, Falls Church, VA 22041.
118. J. H. Wilson, Office of Nuclear Reactor Regulation, U.S. Nuclear Regulatory Commission, Room O10D11, Mail Stop O10H5, Washington, DC 20555.
119. W. G. Wilson, Sandia National Laboratories, P.O. Box 969, MS-9005, Livermore, CA 94551.
120. R. M. Zurn, Sandia National Laboratories, P.O. Box 969, MS-9201, Livermore, CA 94551.
121. Albuquerque Operations Office, Technical Vocational Institute, 525 Buena Vista, SE, Albuquerque, NM 87106, ATTN: Russ Gladstone.
122. Amarillo Area Office, U.S. Department of Energy, Amarillo College, Lynn Library/Learning Center, P.O. Box 447, Amarillo, TX 79178, ATTN: Karen McIntosh.
123. Chicago Operations Office, Office of Planning, Communications & EEO, U.S. Department of Energy, 9800 South Cass Avenue, Argonne, IL 60439, ATTN: L. Pitchford.
124. Headquarters FOIA Reading Room, U.S. Department of Energy, Room 1E-190, Forrestal Building, 1000 Independence Avenue, SW, Washington, DC 20585, ATTN: Carolyn Lawson.
125. Idaho Operations Office, Idaho Public Reading Room, 1776 Science Center Drive, Idaho Falls, ID 83402.
126. Los Alamos National Laboratory, U.S. Department of Energy, c/o Los Alamos Community Reading Room, 1450 Central, Suite 101, Los Alamos, NM 87544, ATTN: LANL Outreach Manager.
127. Nevada Operations Office, U.S. Department of Energy, Public Reading Room, 2753 South Highland Drive, P.O. Box 98518, Las Vegas, NV 89193-8518, ATTN: Janet Fogg.
128. Oak Ridge Operations Office, U.S. Department of Energy, Public Reading Room, 200 Administration Road, P.O. Box 2001, Oak Ridge, TN 37831-8501, ATTN: Amy Rothrock.
129. Richland Operations Office, Washington State University, Tri-Cities Branch Campus, 300 Sprout Road, Room 130 West, Richland, WA 99352, ATTN: Terri Traub.
130. Rocky Flats Office, Public Reading Room, Front Range Community College Library, 3645 West 112th Avenue, Westminister, CO 80030, ATTN: Dennis Connor.
131. Savannah River Operations Office, Gregg-Granite Library, University of South Carolina-Aiken, 171 University Parkway, Aiken, SC 29801, ATTN: Paul Lewis.
132. U.S. DOE Reading Room, Carson County Library, P.O. Box 339, Panhandle, TX 79068, ATTN: Tom Walton.

133.-134. Office of Scientific and Technical Information, P.O. Box 62, Oak Ridge, TN 37831. Given distribution as shown in DOE/OSTI-4500-R75, under category UC-523.