Electrical Effects of Ionizing Radiation on Insulating Materials

Harold P. Hjalmarson, Rudolph E. Magyar and Kenneth E. Kambour

Sandia National Laboratories
Albuquerque, NM 87185

AMS Conference
August 24-28, 2009

Sandia is a multiprogram laboratory operated by Sandia Corporation, a Lockheed Martin Company, for the United States Department of Energy's National Nuclear Security Administration under Contract DE-AC04-94AL85000.

Sandia National Laboratories

Radiation Effects: Evolution from Atomistic to Continuum Phenomena

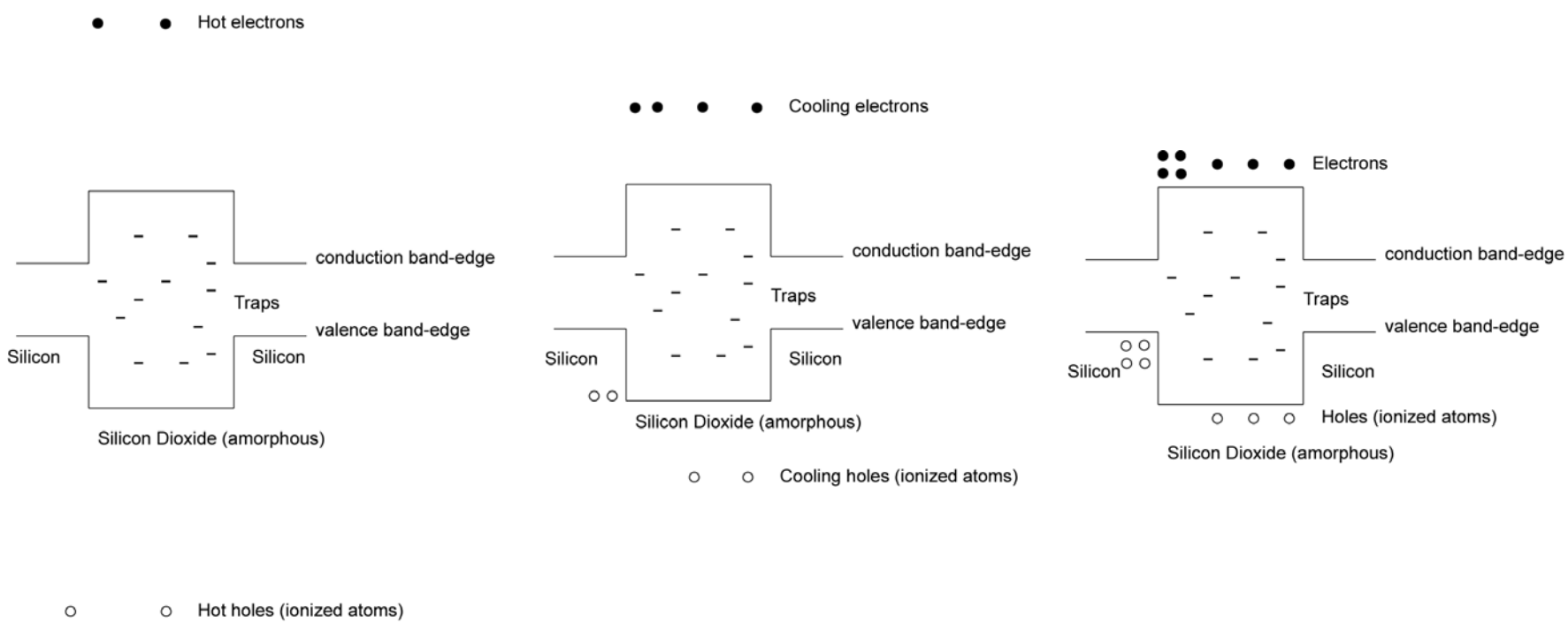

Time-Dependent Density Functional Theory (TDDFT): Rudy Magyar

Two-Temperature Molecular Dynamics (MD): Paul Crozier

Radiation Effects in Oxides and Semiconductors (REOS): HPH

Sandia National Laboratories

Outline

- **Overview**
- **Radiation Effects**
  - **Electronic cooling (TDDFT & REOS)**
  - **Atomic Rearrangement (MD & REOS)**
  - **Electrical Effects from ionizing radiation (REOS)**

Sandia National Laboratories

Localized Radiation Effects: Spurs, Blobs and Short Tracks

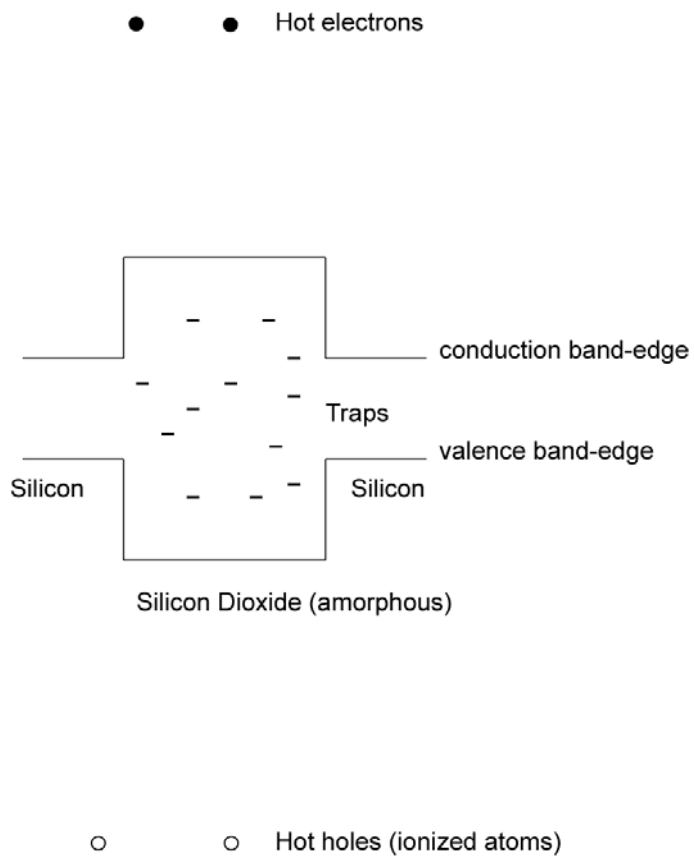

- **Localized deposition of energy**
- **Electron-hole pairs created from plasmon decay**
- **Electrons, holes and excitons present at long times**

Sandia National Laboratories

Continuum Calculations

Kinetic equations for electrons, holes, electron temperature and hole temperature

$$\frac{\partial n}{\partial t} = \frac{1}{q}\nabla \bullet J_n + C_{nII}(n_i^2(T_n) - np)n + C_{pII}(n_i^2(T_p) - np)p - R_n$$

$$\frac{\partial p}{\partial t} = -\frac{1}{q}\nabla \bullet J_p + C_{nII}(n_i^2(T_n) - np)n + C_{pII}(n_i^2(T_p) - np)p - R_p$$

$$\frac{\partial T_n}{\partial t} = -qv_n \bullet E - \nabla \bullet Q_n - C_{nII}(n_i^2(T_n) - np)T_n - C_{pII}(n_i^2(T_p) - np)T_p$$

$$\frac{\partial T_p}{\partial t} = qv_p \bullet E - \nabla \bullet Q_p - C_{nII}(n_i^2(T_n) - np)T_n - C_{pII}(n_i^2(T_p) - np)T_p$$

REOS Calculations

Sandia National Laboratories

Energy Density Conserved

$$U = nT$$

$$\frac{dU}{dt} = n\frac{dT}{dt} + T\frac{dn}{dt}$$

$$\frac{dT}{dt} = -TC_{nii}(n_i^2(T) - np)$$

$$\frac{dn}{dt} = C_{nii}(n_i^2(T) - np)n$$

By inspection

$$\frac{dU}{dt} = 0$$

Impact ionization generates and cools carriers

Thus

$$U(t) = n_0 T_0$$

Sandia National Laboratories

Quasi-Equilibrium Conditions

Impact ionization term:

$$R_{nII} = C_{nII}(n_i^2(T) - np)n$$

$$p = n$$

From $R_{nII} = 0$ in quasi-equilibrium

$$n_{eqm} = n_i(T) = \sqrt{N_v N_c}\exp(-E_g / k_B T_n)$$

Sandia National Laboratories

Quasi-Equilibrium Density and Temperature

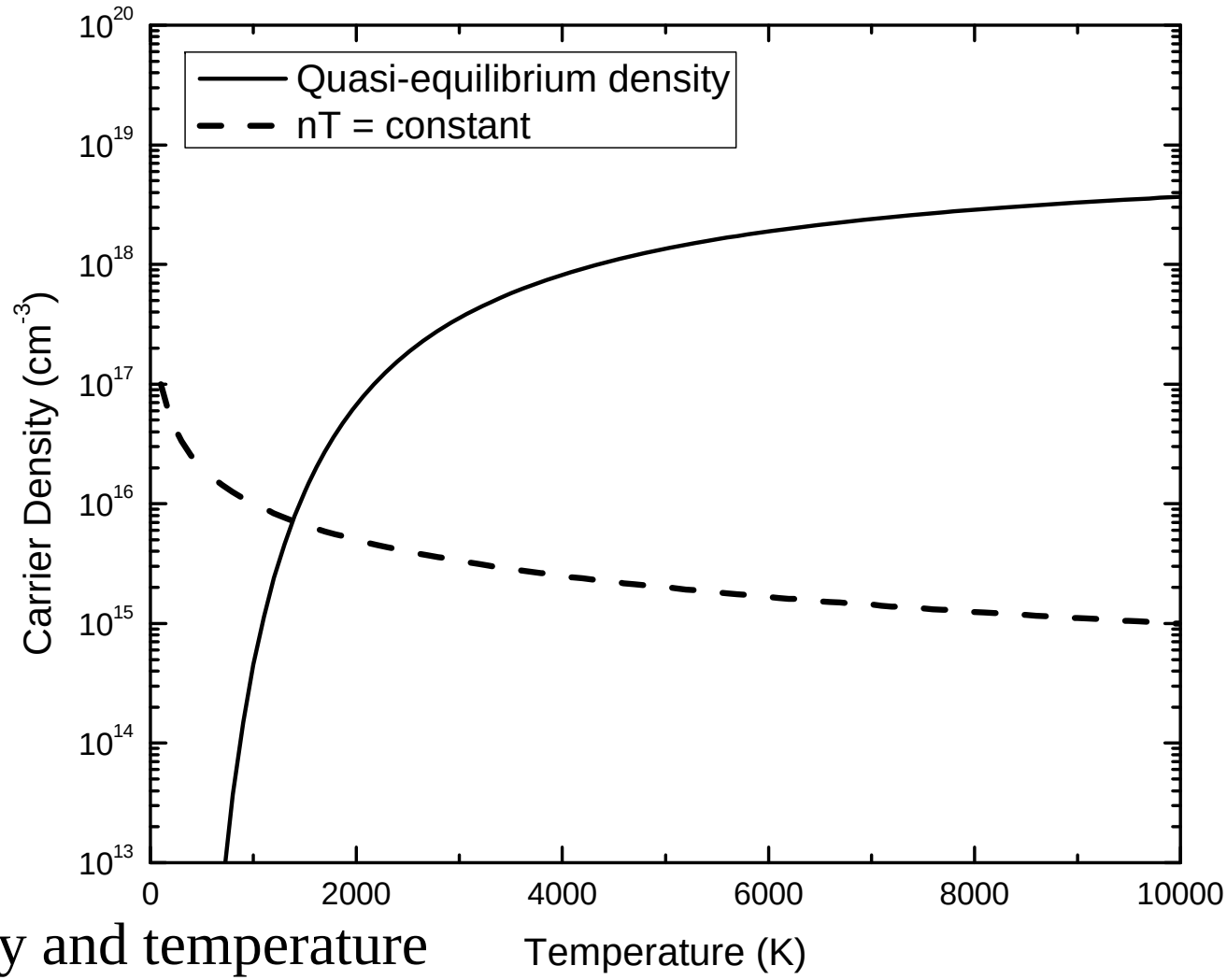

The unique density and temperature given by the intersection of the two curves

Sandia National Laboratories

Electrical Effects Caused by Ionizing Radiation

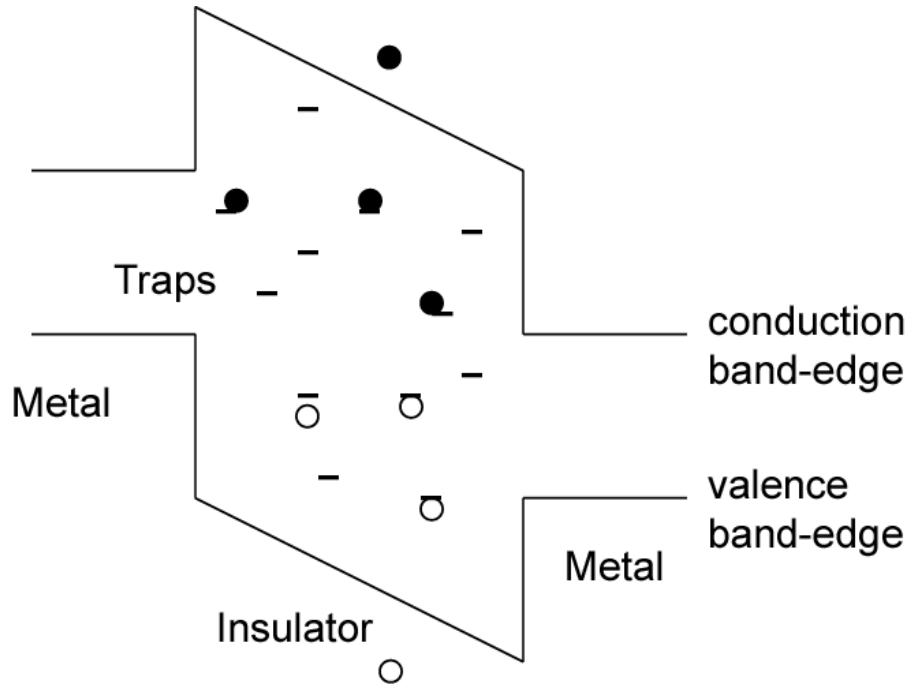

Defects

- **SRH effects: current reduction**
- **Trapping effects: delayed effects**

Sandia National Laboratories

REOS: Transport, SRH Recombination and Defect Reactions

Time-dependent calculations of transport during defect reactions

Continuity Equations

$$\frac{\partial n}{\partial t} = \frac{1}{q} \nabla \bullet J_n + R_n$$

$$\frac{\partial p}{\partial t} = -\frac{1}{q} \nabla \bullet J_p + R_p$$

Shockley-Read-Hall (SRH) recombination

$$T^0 + p \rightarrow T^+$$

$$T^+ + n \rightarrow T^0$$

Sandia National Laboratories

REOS Calculations

- **Structure**
  - 1 micron 1e17 n region
  - 1 micron silicon dioxide region
  - 1 micron 1e17 n region
- **Recombination**
  - Deep hole traps
  - SRH defects
  - Variable density
- **Radiation pulse**
  - Constant, uniform pulse of electron-hole pairs
  - Variable strength
- **Sequence of events**
  - Bias pulse: 1e-7 s duration with 1 V bias
  - Radiation pulse: Constant pulse for 1e-8 s with no bias and high load resistance

Sandia National Laboratories

Photocurrent from an Electron-Hole Plasma

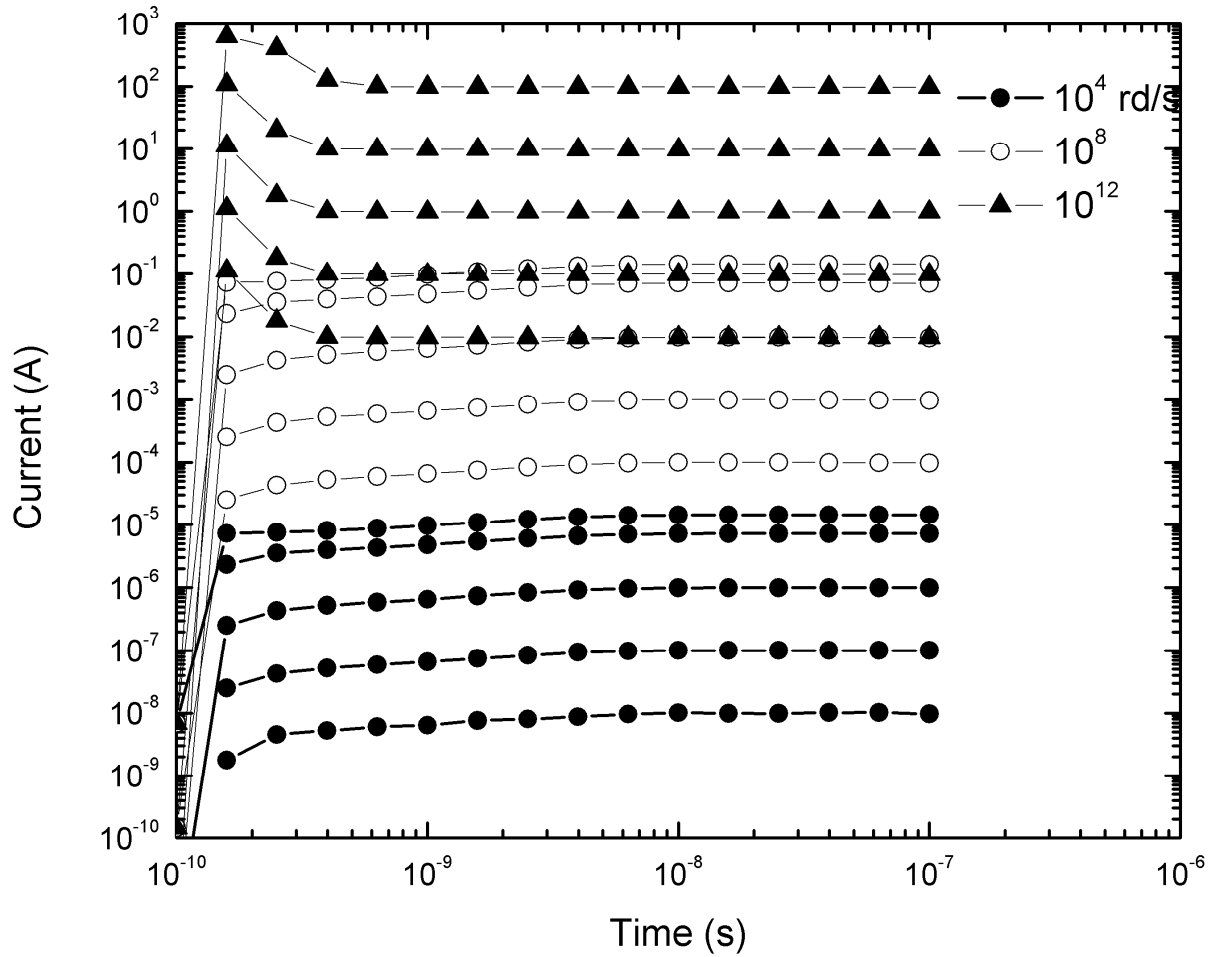

ies

Summary

- **Short times**
  - **Quasi-equilibrium conditions reached at short times**
  - **Results can be compared with TDDFT calculations**
  - **Quasi-equilibrium conditions can be used as initial conditions for MD calculations**
- **Long times**
  - **Large carrier densities produce non-linear effects**
  - **The role of transient defects generated by the quasi-equilibrium carrier distribution will be explored**

Sandia National Laboratories