Institute of Problems in Mechanical Engineering
Russian Academy of Science

Modeling coupled interaction between crack growth, diffusion and chemical reactions

E.Vilchevskaya, A.Freidin

Joint U.S.-Russia Conference on Advances in Material Science
August 31 – September 3, 2009

Silicon oxidation

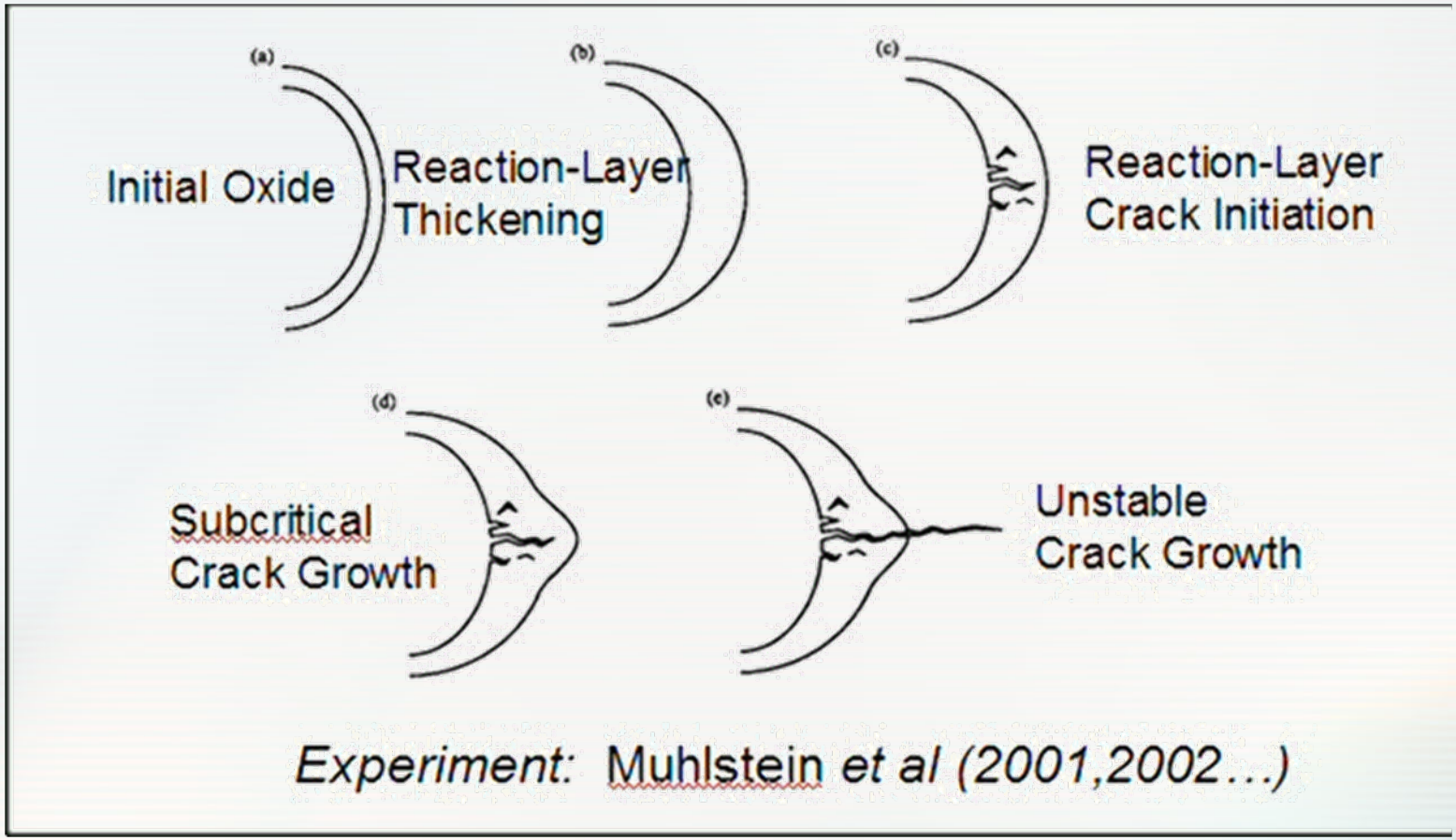

Statement of the problem

$$\frac{\partial c}{\partial t} = -\frac{\partial J}{\partial x} - qc^{\alpha}, \quad J = -\beta c \frac{\partial \mu}{\partial x}$$

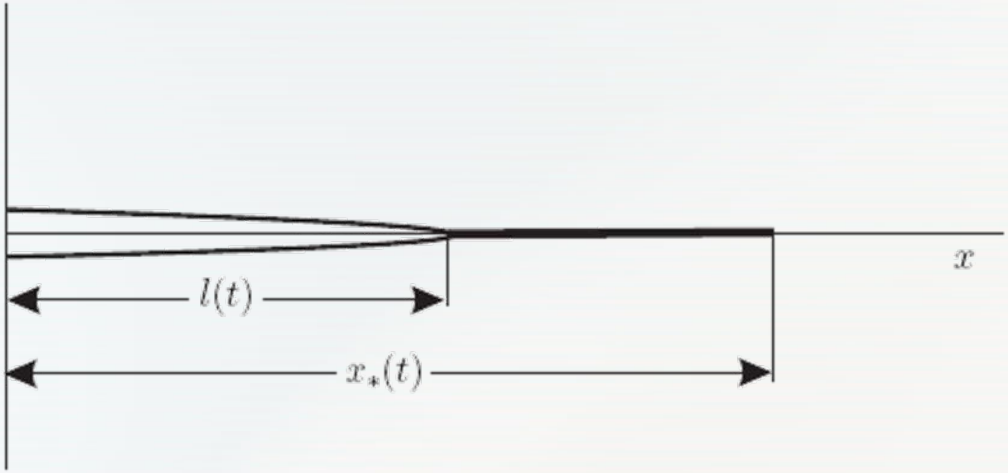

$$c = c_0 \quad \text{at} \quad x = l(t)$$

$$\beta c \frac{\partial \mu}{\partial x} = -kc \quad \text{at} \quad x = x_*(t)$$

In the steady-state approximation

$$\frac{\partial c}{\partial t} = -\dot{l}\frac{\partial c}{\partial x} \equiv -\dot{l}\frac{\partial c}{\partial \xi}, \quad \xi = x - l$$

A simplified model

$$J = -D\frac{\partial c}{\partial x}$$

$$D\frac{\partial^2 c}{\partial \xi^2} - qc^{\alpha} = -\dot{l}\frac{\partial c}{\partial \xi} \qquad \xi \in [0, \xi_*]$$

$$c = c_0 \quad \text{at} \quad \xi = 0, \quad D\frac{\partial c}{\partial \xi} = -kc \quad \text{at} \quad \xi = \xi_*$$

$$-D\frac{\partial c}{\partial \xi}\Big|_{\xi_*} = kc\Big|_{\xi_*} = nVg$$

Barenblatt-Dugdale approach

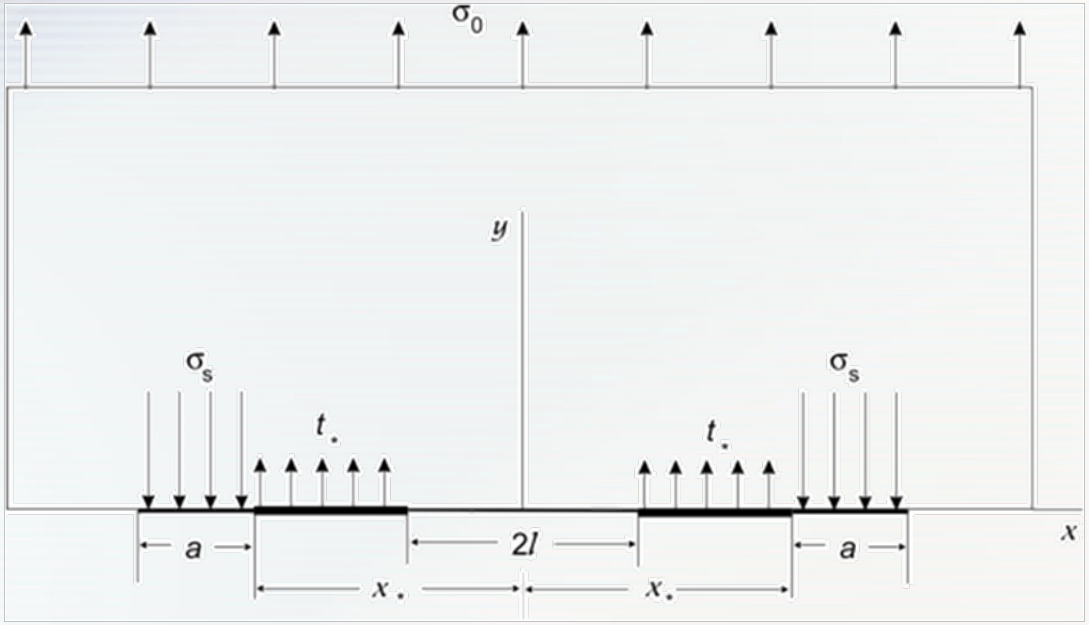

$$p(x) = \begin{cases} \sigma_0, & x \in (-l, l), \\ \sigma_0 + t_*, & |x| \in (l, l+\xi_*), \\ \sigma_0 - \sigma_s, & |x| \in (l+\xi_*, l+a) \end{cases}$$

$$\int_{-(l+a)}^{l+a} p(x)\sqrt{\frac{l+a+x}{l+a-x}}dx = 0$$

$$\psi(l, a \mid x_*, \sigma_0) = 0$$

$$\delta(x = l) = \delta_c$$

$$\delta(l \mid l+a, \xi_*, \sigma_0) = \delta_c$$

Incubation period

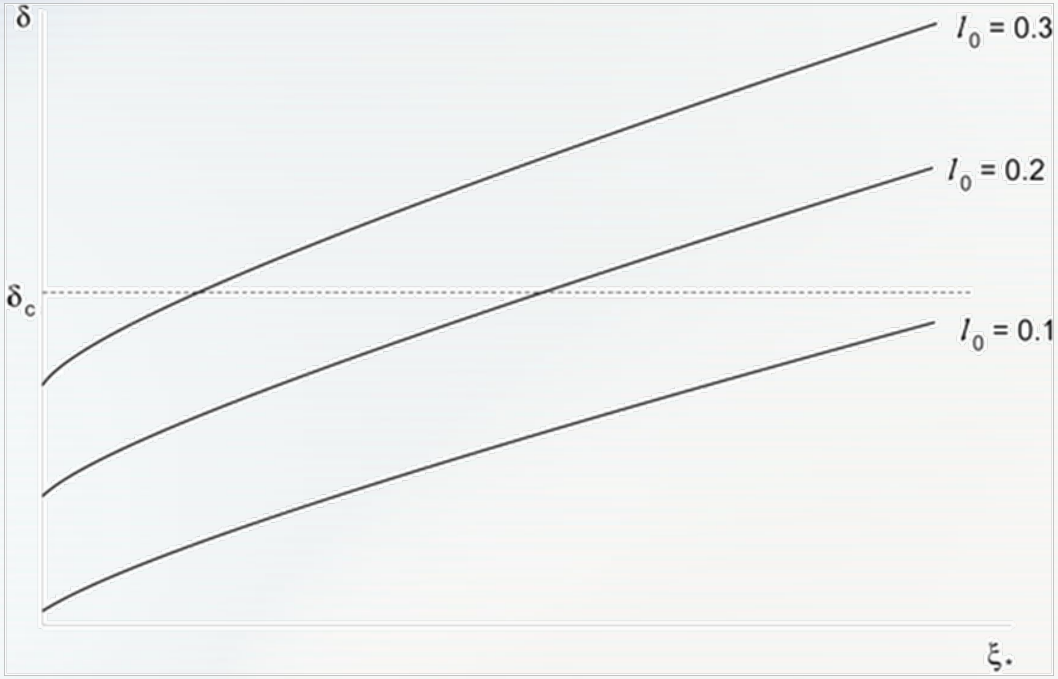

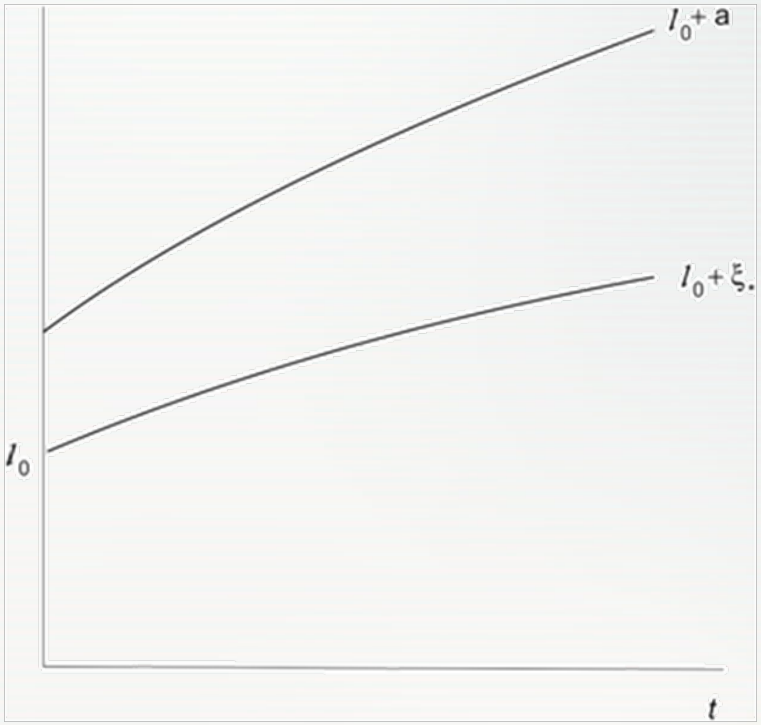

Crack opening $\delta(x = l_0)$ in dependence on the oxide zone ξ_* at various crack lengths l_0

The oxide and plastic zone growth during the incubation period

Crack and plastic zone growth due to the oxidation process

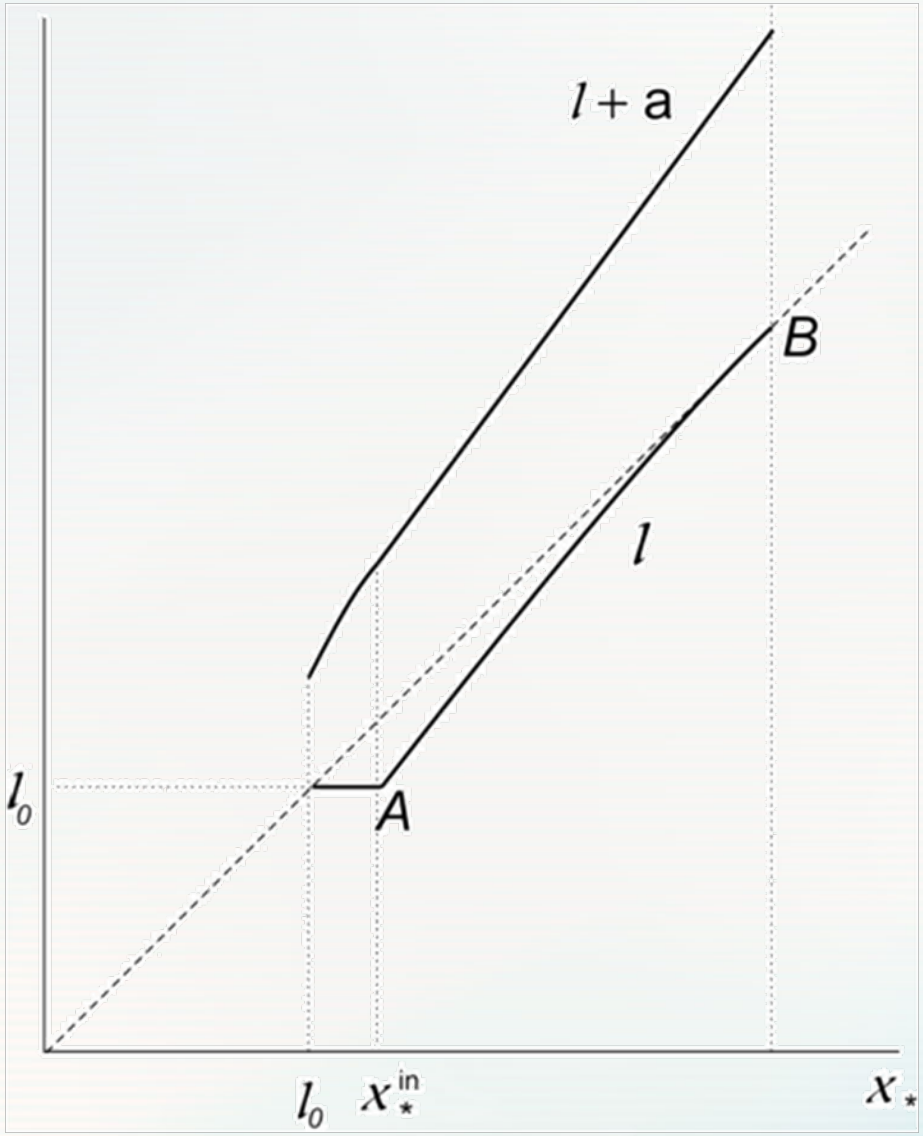

Conclusions

The model is suggested to describe the oxidation zone formation in front of a crack and the interconnection between the diffusion, oxidation zone and crack growth. The simplest realization demonstrated:

- **The incubation period existence**
- **The role of the diffusion process as a driving factor for the oxide zone formation**
- **The role of the oxide induced stresses**
- **The crack growth in dependence on the oxide zone growth**