«INFLUENCE OF DYNAMIC PROPERTIES ON PERTURBATION GROWTH IN TANTALUM»

V.V. Igonin, O.N. Ignatova, A.I. Lebedev, M.O. Lebedeva, S.S. Nadezhin,
A.M. Podurets, V.A. Raevsky, V.P. Solov'ev
(RFNC-VNIIEF 607190, Sarov, Nizhny Novgorod reg., Russia)

M.A. Zocher, D. Preston
(LANL, Los Alamos, USA)

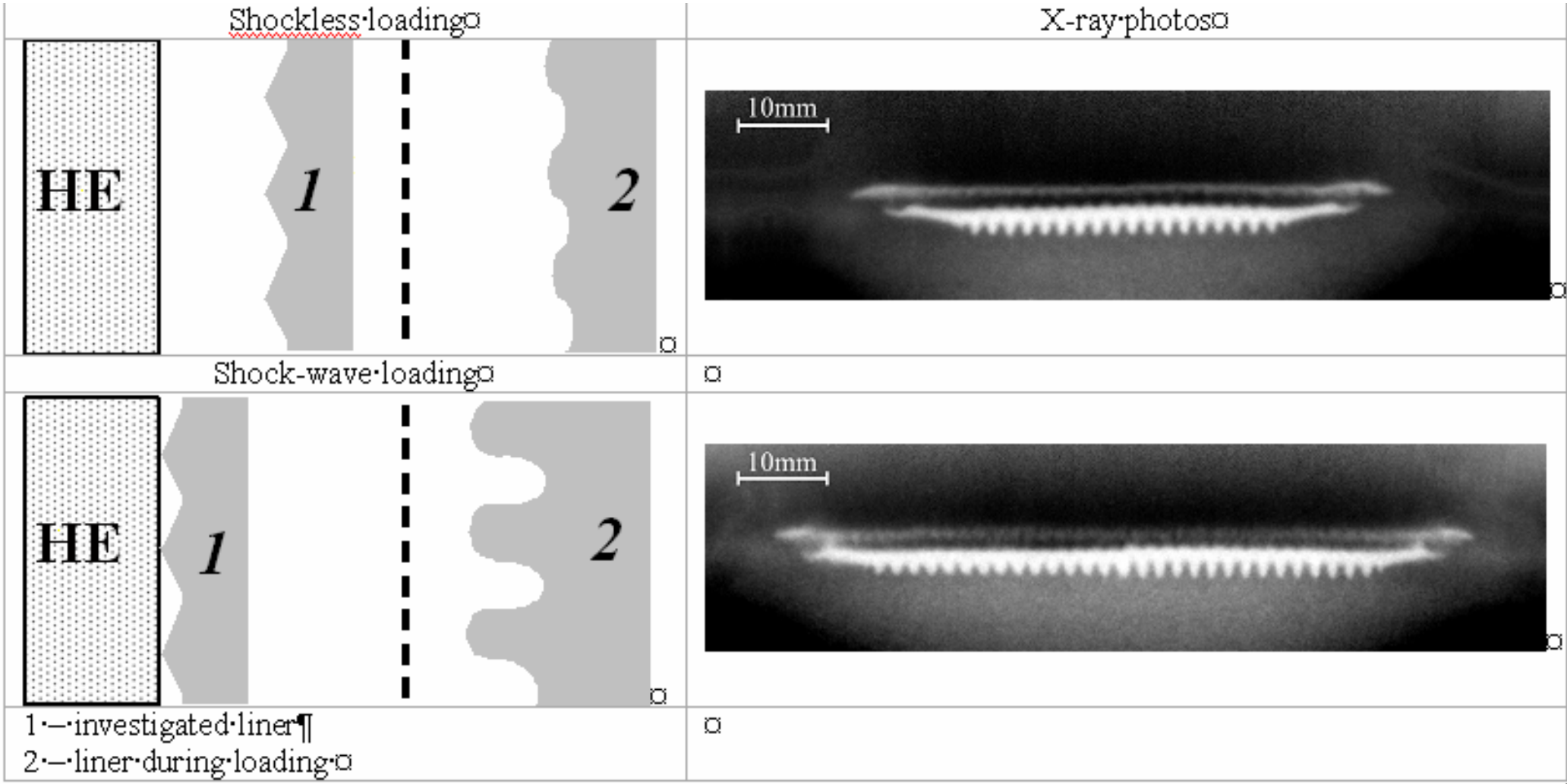

Figure 1 – Method for recording of perturbation growth

Shockless loading

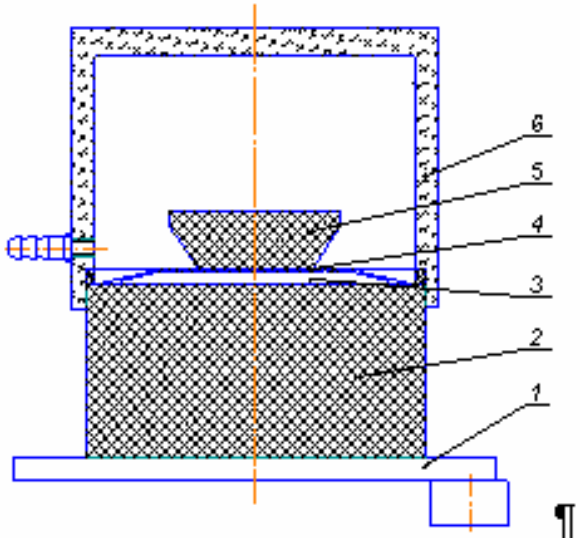

1°–°generator·of·planar·detonation·wave;¶
2°-°HE:·∅120×60°mm;¶
3°-°vacuumized·gap:·δ=4°mm;¶
4°-°investigated·liner:·Ta,·∅60×1°mm;¶
5°-°foam·plastic:·∅60×20°mm°(ρ=0.66±0.01 g/cm³);¶
6°-°sealing·cylinder.¶

P_{max}≈40°GPa°

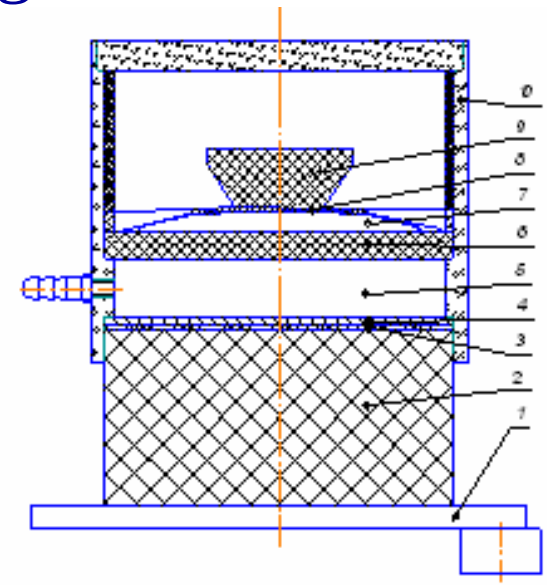

1°-°generator·of·planar·shock·wave;¶
2°–°first-stage·HE:·∅120×60°mm;¶
3°-°damper:·plexiglass,·∅120×2°mm;¶
4°-°first-stage·impactor:·*Fe*,·∅120×2.2°mm;¶
5°-°vacuumized·gap:·δ=20°mm;¶
6°-°second-stage·HE:·∅120×10°mm;¶
7°-°vacuumized·gap:·δ=3°mm;¶
8°-°investigated·liner:·*Ta*,·∅50×1°mm;¶
9°-°foam·plastic·$∅_{top}$50($∅_{bot}$25)×20°mm·
(ρ=0.66±0.01°g/cm³);¶
10°-°sealing·cylinder.¶

P_{max}≈75°GPa¤

Shock-wave loading

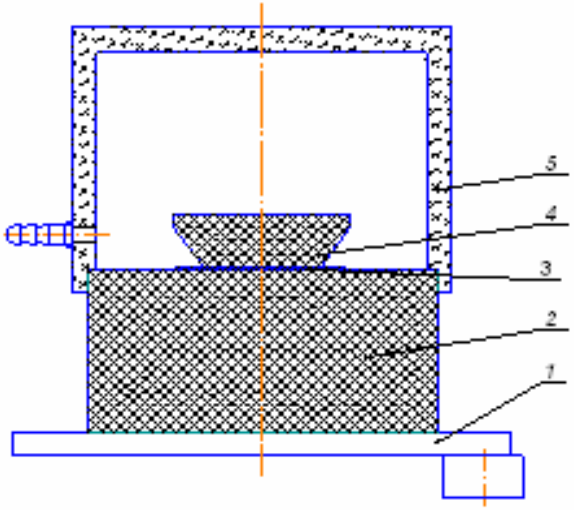

1 - generator of planar detonation wave;
2 - HE: Ø120×65 mm;
3 - investigated liner: Ta, Ø60×1 mm;
4 - foam plastic: Ø60×20 mm (ρ=0.66±0.01 g/cm³);
5 - sealing cylinder.

P_{max}≈40 GPa

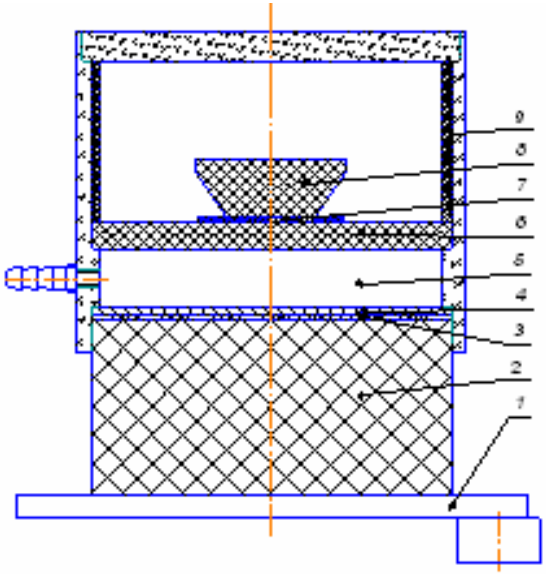

1 - generator of planar shock wave;
2 - first-stage HE: Ø120×60 mm;
3 - damper: plexiglass, Ø120×2 mm;
4 - first-stage impactor: *Fe*, Ø120×2.2 mm;
5 - vacuumized gap: δ=20 mm;
6 - second-stage HE: Ø120×10 mm;
7 - investigated liner: *Ta*, Ø50×1 mm;
8 - foam plastic $Ø_{top}$50($Ø_{bot}$25)×20 mm (ρ=0.66±0.01 g/cm³);
9 - sealing cylinder.

P_{max}≈85 GPa

Scheme of X-ray radiography

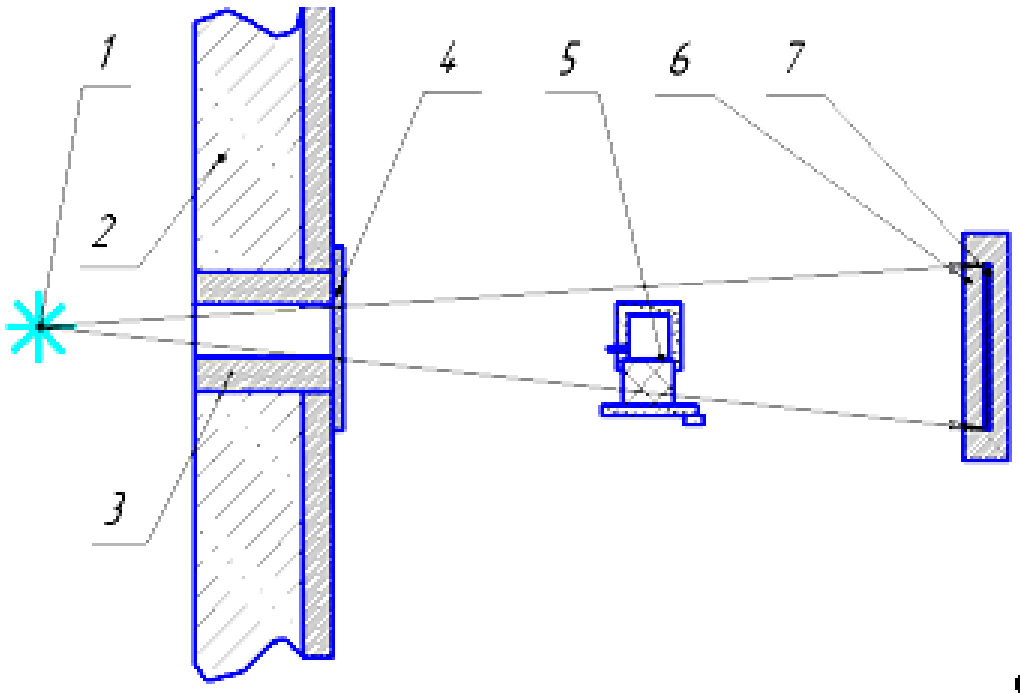

1°–°source·of·X-ray·radiation¶
2°–°element·of·concrete·wall·of·bunker¶
3°–°collimator¶
4°–°metal·protective·screen¶
5°–°experimental·assembly¶
6°–°cassette¶
7°–°screens·ADC°–°CR·(°10°units°)¶

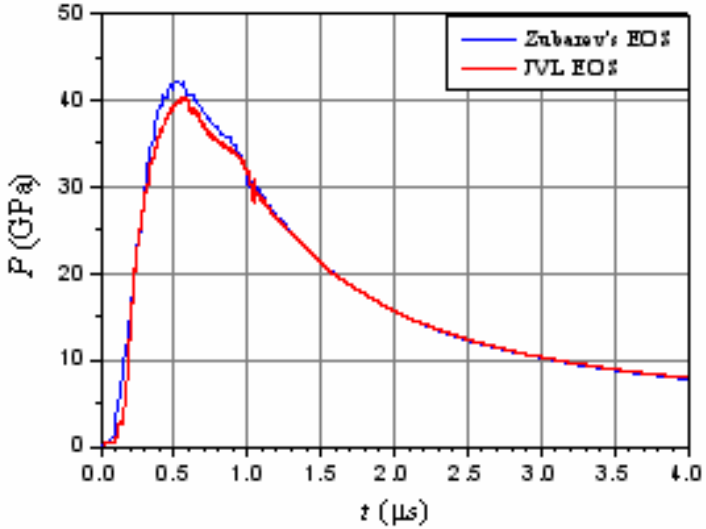

One-stage assembly

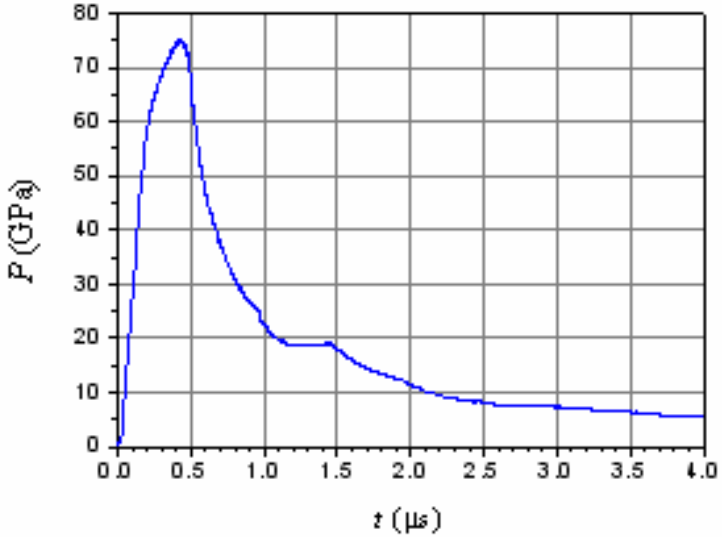

Two-stage assembly

Figure 3-Pressure versus time. Shockless loading.

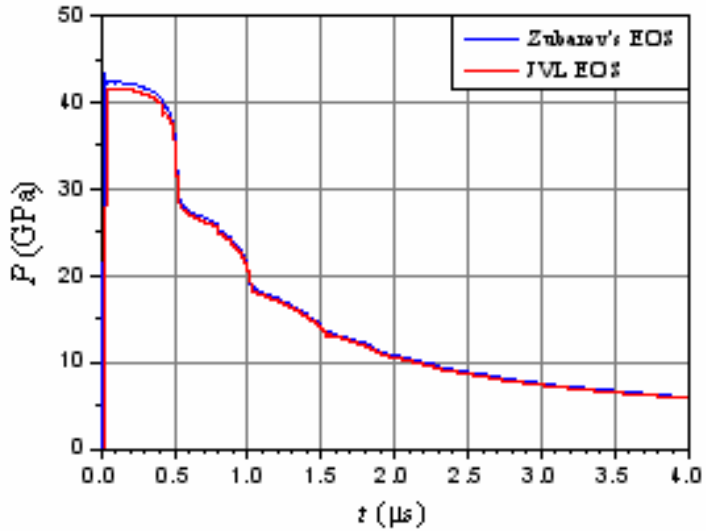

One-stage assembly

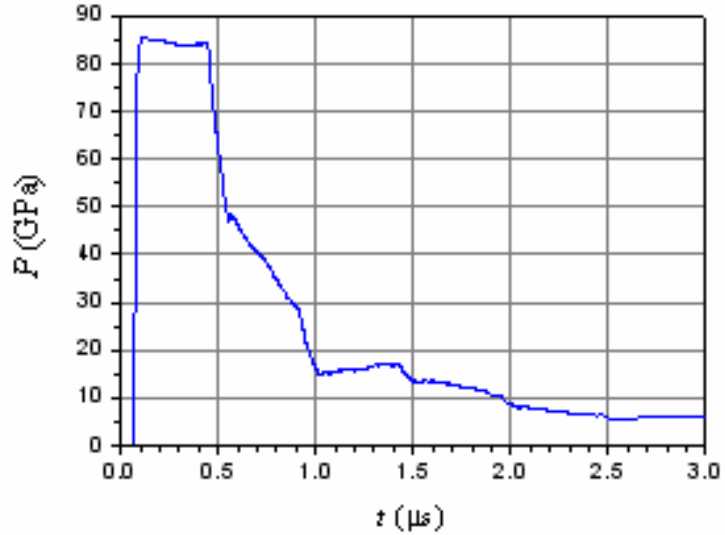

Two-stage assembly

Figure 4-Pressure versus time. Shock-wave loading.

Results of tests and calculation of perturbation growth in tantalum. $P_{max} \approx 40$ GPa

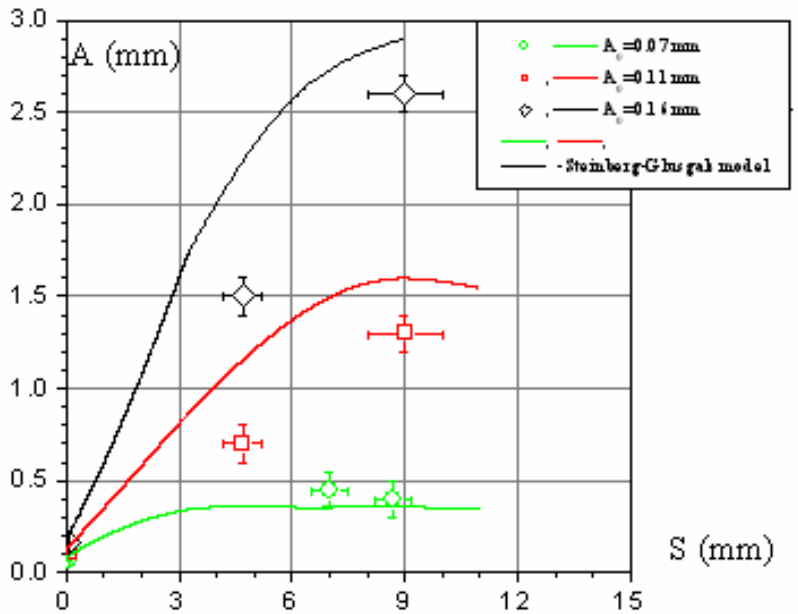

Shockless loading

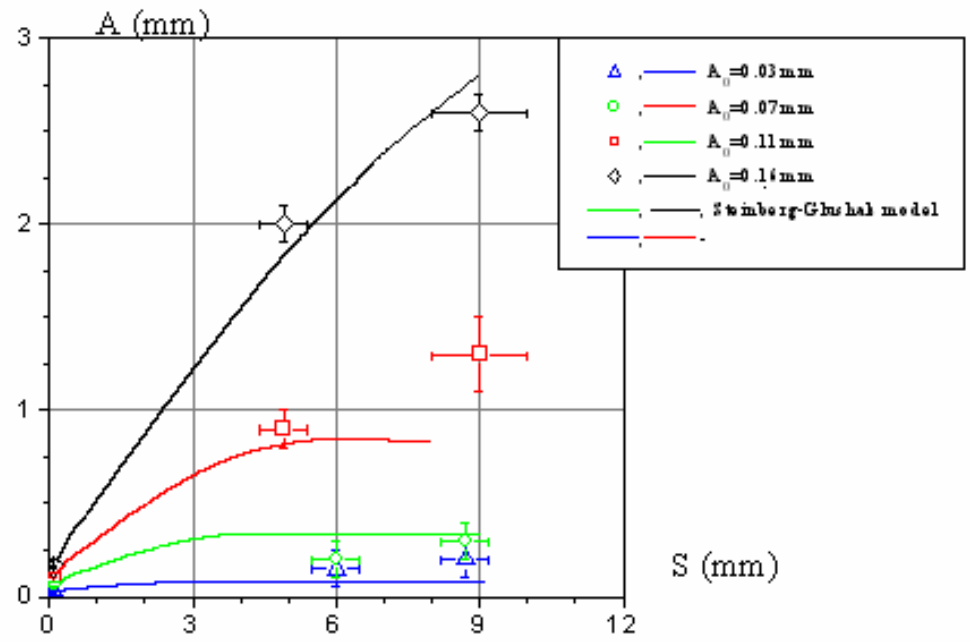

Shock-wave loading

Results of tests and calculation of perturbation growth in tantalum. $P_{max} \approx 75\text{-}85$ GPa

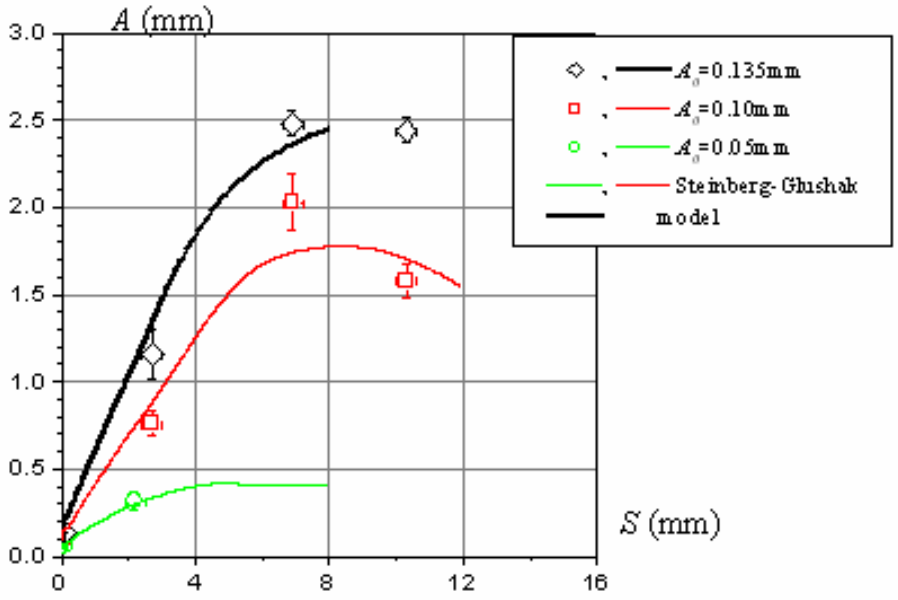

Shockless loading

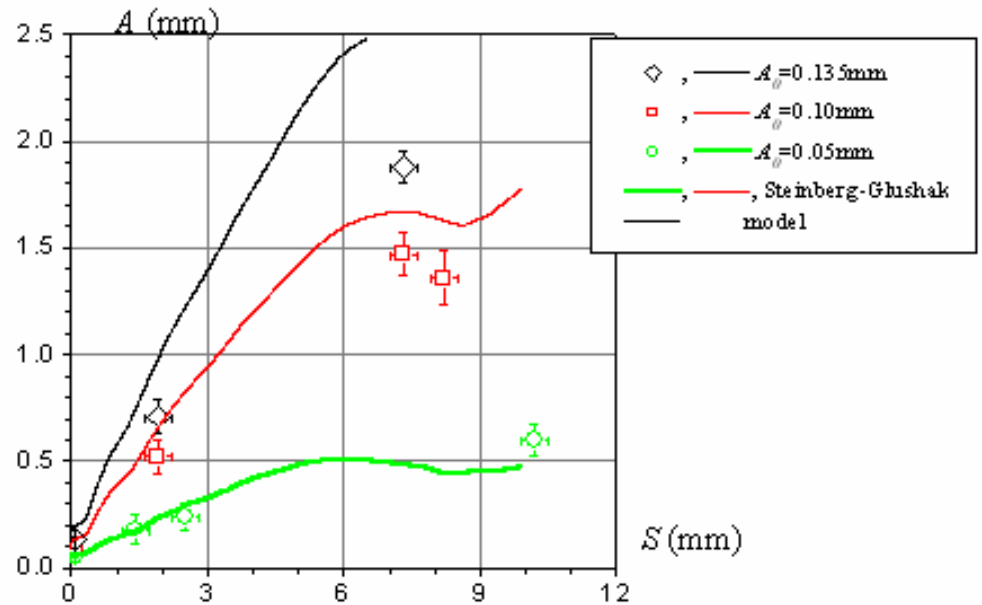

Shock-wave loading

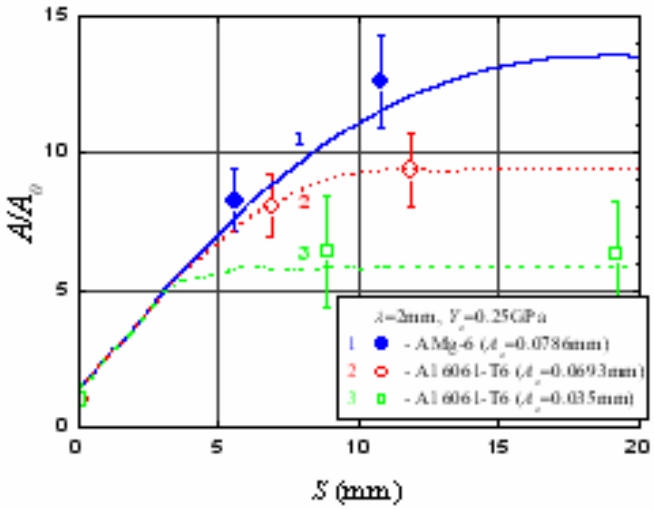

Shockless loading. P_{max}≈45 GPa

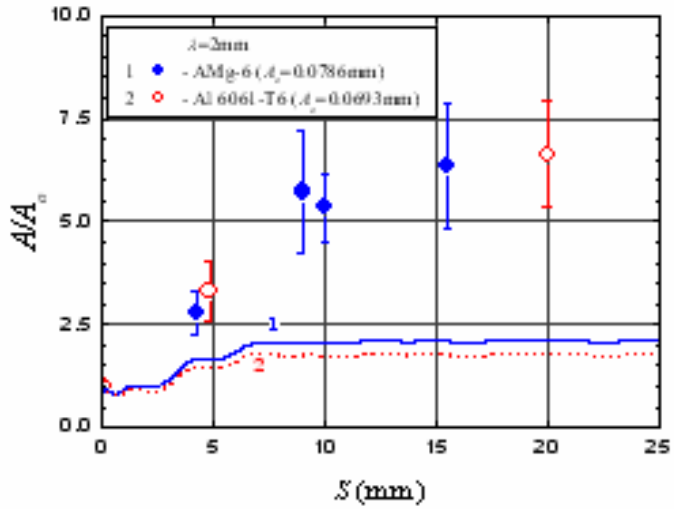

Shock-wave loading. P_{max}≈45 GPa

Figure 8 – Results of tests and calculations of perturbation growth in aluminum.

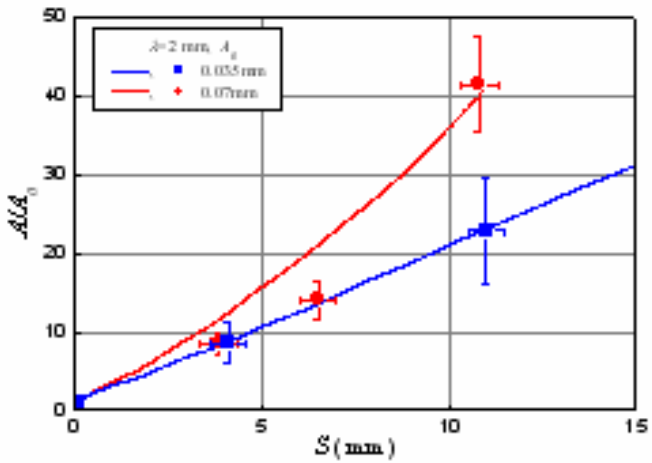

Shockless loading. P_{max}≈40 GPa

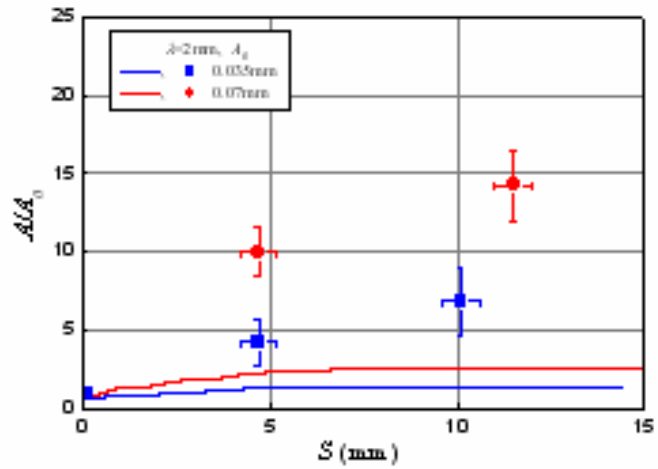

Shock-wave loading. P_{max}≈40 GPa

Figure 9 – Results of tests and calculations of perturbation growth in copper.

Yield strength versus pressure

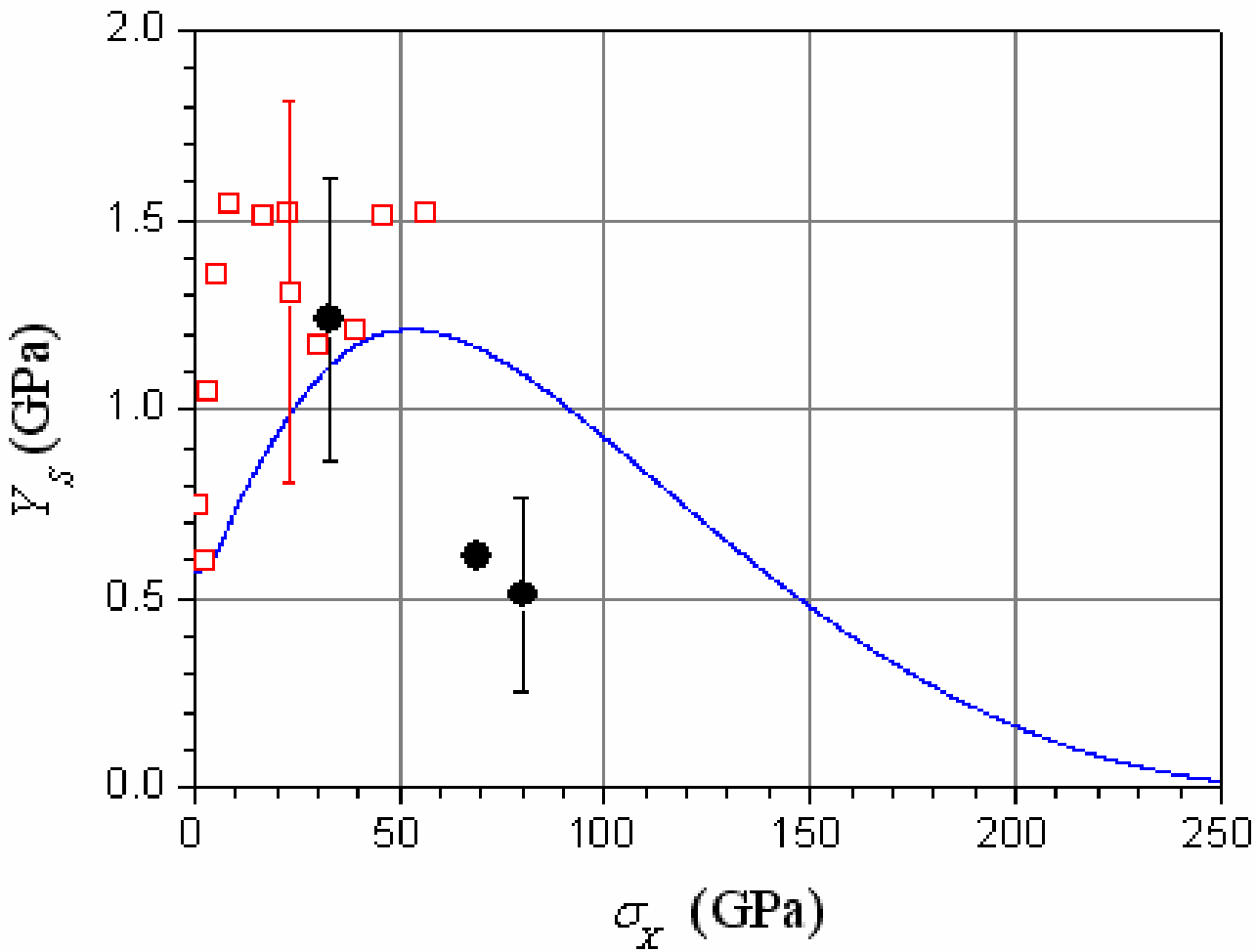

experiment [L.C. Chhabildas, J.R. Asay, 1992]: ● - for shock-wave loading

□ - for quasi-isentropic loading;

— - calculation