Stockpile Stewardship Quarterly

Defense Programs | *Stockpile Stewardship in Action* | Volume 2, Number 3

Message from the Assistant Deputy Administrator for Stockpile Stewardship, Chris Deeney

Congratulations on a job well done to the awardees of our solicitations for the Stewardship Science Academic Alliances Program and the joint program with the DOE Office of Science, High Energy Density Laboratory Physics. I also say well done to the others who submitted proposals. The breadth and quality of the research represented in the proposals are astounding. The competition was fierce with 34% and 25% of the proposals accepted for the two solicitations, respectively.

This year marked the 20th anniversary of the last underground nuclear test, Divider. The stewardship program, described by a series of articles in our quarterlies, should be mighty proud of the accomplishment over the last 20 years: enabling a safe, secure and effective deterrent without recourse to underground nuclear testing. Thank you all for your great science. Our national policies would not be possible without your hard work and excellence. This issue of the *Stockpile Stewardship Quarterly* features some of the laser facilities and superb diagnostics that make it all possible.

In FY 2012, the nuclear security enterprise achieved many remarkable things, from the exquisite stewardship experiments at the Dual Axis Radiographic Hydrodynamic Test Facility, National Ignition Facility, Z, OMEGA, U1a Complex, and a host of other tools to the myriad of understanding achieved through small-scale experiments. A new 16 petaflop computer system, Sequoia, was successfully brought online at Lawrence Livermore National Laboratory. A major level 1 milestone on combining experimental data, new models for materials and explosives, and advance simulations to predict the early phase implosions of primaries was completed. Such impressive work enables major policy options about how we proceed to modernize and sustain the stockpile. A similar multi-disciplinary, multi-organizational effort has led to tremendous progress on the path to ignition. Although our longstanding goal and milestone for ignition by 2012 was not accomplished, we are much, much closer to achieving that goal than we ever have been. The exciting news is that the remaining challenges appear at the heart of the physics of implosions—resonant with the work we must do in stewardship.

We remain committed to achieving ignition, and the community has developed a path forward. I want to personally thank the community for their efforts, both in bringing us to this point and in laying out the next programmatic efforts.

Academic Alliances Awards

Joint Program in High Energy Density Laboratory Plasmas (HEDLP)

DOE's NNSA and the DOE Office of Science awarded 46 research grants totaling more than $14 million as part of the Joint Program in HEDLP. The proposals selected embody the breadth of research in HEDLP science.

Stewardship Science Academic Alliances (SSAA) Program

NNSA's Office of Stockpile Stewardship awarded 44 research grants as part of the SSAA Program. This research will help NNSA enhance and promote the academic efforts of future scientific leaders and recruit researchers who will help ensure the safety, security and effectiveness of the nation's nuclear stockpile.

Inside this Issue

2 Jupiter – An Intermediate-Scale Laser User Facility
4 Trident Intermediate-Scale Laser Facility
5 Mach-Zehnder Fiber-Optic Links for Inertial Confinement Fusion Diagnostics
7 High Energy Density Experiments at the OMEGA Laser Facility
9 Doubling the Electric Power Generated by an LTD Cavity
10 Reproducibility of Sandia National Laboratories' 80-terawatt Z Accelerator
11 The SSGF Program Welcomes the 2012 Class

Comments

Questions or comments regarding the *Stockpile Stewardship Quarterly* should be directed to Terri.Stone@nnsa.doe.gov

Technical Editor: Dr. Chris Werner, Publication Editor: Millicent Mischo

Jupiter – An Intermediate-Scale Laser User Facility by Robert Cauble (Lawrence Livermore National Laboratory)

Several recent DOE-sponsored reports[1] elucidate a future of high energy density (HED) experimental science aimed, in part, at use of large-scale laser facilities, mainly the National Ignition Facility[2] (NIF) at Lawrence Livermore National Laboratory (LLNL) and OMEGA[3] and OMEGA EP[4] at the University of Rochester's Laboratory for Laser Energetics. The reports identified several key factors that ensure success of an HED enterprise that will help underpin the needs of science-driven stockpile stewardship. Those factors include strengthening university activities in HED to broaden the field, coupling academic research to NNSA laboratory programs to ensure relevance, providing for training and recruitment of students and young researchers in HED science to sustain the field, and giving these researchers adequate access to experimental facilities. The reports call out the last item—assured access by the scientific community to facilities capable of front-rank HED science—as crucial to expanding the field; attracting and training students; developing novel experimental ideas, techniques and diagnostics; and performing research relevant to NNSA needs. They also note that such access to the large facilities is and will remain relatively limited, and they call for exploiting flexible (and relatively inexpensive) intermediate-scale facilities to fill these needs, as well as providing platforms from which to efficiently stage experiments to the larger installations.

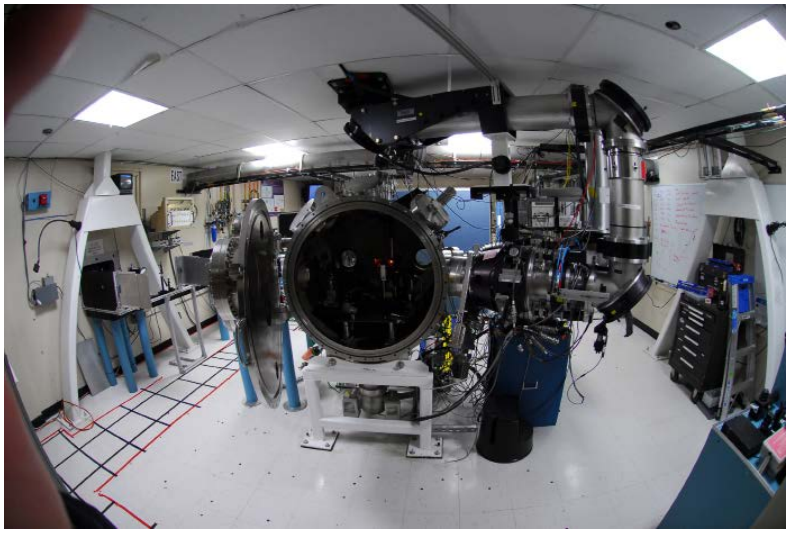

Figure 1. Jupiter's Janus Target Area 1, showing the articulated arm that permits differential positioning of one of the two beams.

Such a facility is the Jupiter Laser Facility[5] at LLNL. Jupiter has several laser systems providing two high-energy (up to 2 kJ), long-pulse (ns-scale) beams, a high-power (400 TW), high-energy (up to 400 J) beam, a short-pulse (60 fs), moderate-energy (12 J) beam, as well as a flexible, multi-beam (4 beams, 15 J, short- and long-pulse capability), moderate-repetition-rate laser (4-minute cycle time). Jupiter also has a well-equipped low-energy preparation laser, a set-up and assembly optical laboratory, target fabrication capability, and a metrology station. There are other U.S. intermediate-scale laser facilities (i.e., Trident[6] at Los Alamos National Laboratory, the Nevada Terawatt Facility[7] and a couple of university groups); however Jupiter is the only intermediate-scale laser system that operates as a dedicated user facility.

Jupiter operates as an Office of Science-style user facility, where all laser time is provided free of charge and apportioned through an open, competitive peer-review process on a scale that provides more laboratory access and greater flexibility than large-scale facilities can accommodate. The laser capabilities are diverse, providing a variety of platforms for different classes of experiments. Importantly, Jupiter has the infrastructure to safely and simultaneously support multiple users with a range of experience levels; a quarter of Jupiter users are students.

Established as a user facility in 2007, Jupiter presently has registered users representing universities and laboratories in North America, Europe, and Asia. A primary mission element for Jupiter is to help grow the HED field. In 2008, there were 185 users and only half the number of academic institutions that now use the facility. Today, Jupiter has more than 440 active users from 51 universities and 20 laboratories and technical institutions.

While comparatively small—with a technical staff of only 11, using some 1980s-era equipment, and supported by internal LLNL funding—Jupiter ranks as the fifth highest energy research laser in the United States—after NIF, OMEGA, Nike (Naval Research Laboratory) and Z-Beamlet.[8] Some experimenters use intermediate-scale lasers to develop and stage experiments to the large facilities. One prominent example is x-ray Thomson scattering (TS), a technique that permits measurement of density, temperature, and ionization state of dense plasma. Development at Jupiter[9] has led to successful TS experi-ments at OMEGA and inclusion in one of the first eight fundamental science experiments planned for NIF. Jupiter has also been used as a diagnostic development platform, where the long-pulse laser was used to demonstrate a 2-dimensional (2D) VISAR,[10] a velocity interferometer frequently used to measure the speed of a shocked, reflecting surface to study material properties under compression. VISAR is usually employed as a slice of the surface streaked in time. The 2D VISAR, which can be used simultaneously with the 1D version, provides a snapshot of the entire moving surface that not only delivers an optical image, but also a fringe map that can be unfolded to reveal the instantaneous velocity field of the entire surface. Jupiter is also being used to test fast advanced diagnostics developed by NNSA and to validate diagnostics now on NIF.

In addition, Jupiter hosts laser experiments that are closely aligned with, and provide data for, NNSA and DOE programs. NNSA requirements include an understanding of dense ionized matter, and recent experiments at Jupiter have produced data on the equations of state of dense plasma,[11] fundamental properties of warm dense matter,[12]

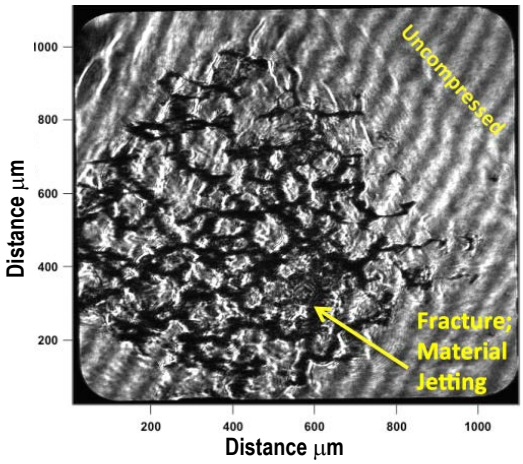

Figure 2. 2D VISAR image showing surface rupture of a laser-shocked silicon (Si) target. The shock does not fill the entire surface; uncompressed Si can be seen in the upper right. Fringes across the surface permit unfolding of the velocity field across the entire image. (Courtesy Ray Smith, LLNL)

and the kinetics of phase transitions in shock-compressed materials.[13] The DOE Office of Fusion Energy Sciences (FES) sponsors research directed at an understanding of the principles that apply to fast ignition using energetic short-pulse lasers. FES-sponsored experiments at Jupiter (e.g., Reference 14) can involve as many as 8 or more institutions and 20 or more participants, including professors, postdoctorates, and students. Preparation, execution, and analysis of each experiment can collectively entail nearly one man-year of effort.

Intermediate-scale lasers are capable of producing high-impact HED science in their own right within various subareas of HED science. In laser-matter interactions, dense jets of MeV positrons were first produced using Jupiter's short-pulse laser,[15] results that indicate that it may be possible to create an electron-positron pair plasma using planned petawatt capabilities at NIF. Indeed, pair-plasma creation is another of the approved NIF fundamental science experiments. In HED materials, the strength of diamond at Mbar pressures has recently been measured.[16] The fundamental behavior of relativistic HED plasmas is also being studied.[17,18] In another HED research area identified by the DOE, laser acceleration of charged particles to high energies, groups at Jupiter have accelerated electrons to GeV energies over a length of less than a centimeter.[19] In fact, high-energy records for laser-accelerated protons and electrons have been held by intermediate-scale facilities, Trident[20] and Jupiter,[21] respectively.

Training of students and young researchers is a major element of Jupiter's mission. Facility staff does not directly train students in experimental techniques (although with additional staff operating as "beam-line scientists," this would be possible). The students learn from more experienced team members; some first-time students arrive at Jupiter having never seen a high-power laser. Typically, Jupiter experiments are scheduled for approximately 4 weeks; time that will include set-up in the target area, shooting, and tear-down. This is generally enough time to effectively mentor the students in all phases of the experiment. Students at Jupiter have included fellows from the NNSA Stewardship Science Graduate Fellowship Program. Each year, several students with significant experience at Jupiter earn PhDs and become postdoctorates at NNSA national laboratories or other institutions performing HED science.

Jupiter issues a call for proposals via its website (http://jlf.llnl.gov) once a year, near the end of April. Because of limited capacity, only about half of the proposals are approved. Most proposals are from collaborative teams, often including LLNL and academic scientists. (A recent experiment included researchers and students from 9 institutions and from 9 countries.) However, there is no requirement that an experiment have LLNL personnel on the team. Some proposals may request capabilities that Jupiter does not presently have. Since the relatively small scale of the facility allows for it, with sufficient notice, Jupiter staff will try to be as flexible as possible. Recent user-requested modifications have included doubling the frequency of the high-power, high-energy beam, splitting that beam into two beams with temporal separation, and filling target chambers with low-density gas.

Jupiter is an intermediate-scale laser user facility that is serving the HED community in response to needs determined by NNSA, providing impactful scientific access for researchers and students in academic and the laboratory settings.

References

[1]Report of the Interagency Task Force on High Energy Density Physics (2007); Report from the FES Panel on High Energy Density Laboratory Plasmas: Advancing the Science of High Energy Density Laboratory Plasmas, R. Betti, Chair (2009); Report of the 2009 Workshop on Basic Research Needs for High Energy-Density Laboratory Physics, R. Rosner and D. Hammer, Chairs (2010). All are available at http://science.energy.gov.

[2]E.I. Moses, J. Phys. Conf. Series 112, 012003, 2008.

[3]T.R. Boehly et al., Opt. Commun. 133, 495, 1997.

[4]D.D. Meyerhofer et al., J. Phys. Conf. Ser. 244, 032010, 2010.

[5]See https://jlf.llnl.gov.

[6]See http://trident.lanl.gov.

[7]See http://www.ntf.unr.edu/.

[8]P.K. Rambo et al., Appl. Opt. 44, 2421, 2005.

[9]A. Kritcher et al., Science 322, 69, 2008; A. Kritcher et al. Phys. Rev. Lett. 103, 245004, 2009; P. Neumeyer et al., Phys. Rev. Lett. 105, 075003, 2010.

[10]D.J. Erskine et al., Rev. Sci. Instrum. 83, 043116, 2012.

[11]G.M. Dyer et al., Phys. Rev. Lett. 101, 015002, 2008.

[12]Y. Ping et al., Phys. Rev. Lett. 96, 255003, 2006.

[13]R.F. Smith et al., Phys. Rev. Lett. 101, 065701, 2008.

[14]A. MacPhee et al., Phys. Rev. Lett. 104, 055002, 2010.

[15]H. Chen et al., Phys. Rev. Lett. 102, 105001, 2009; 105, 015003, 2010.

[16]R.S. McWilliams et al., Phys. Rev. B 81, 014111, 2010.

[17]Y. Ping et al., Phys. Rev. Lett. 100, 085004, 2008.

[18]J. Ross et al., Phys. Rev. Lett. 104, 105001, 2010.

[19]D. Froula et al., Phys. Rev. Lett. 103, 215006, 2009; B. Pollock et al., Phys. Rev. Lett. 107, 045001, 2011.

[20]S.A. Gaillard et al., Phys. Plasmas 18, 056710, 2011.

[21]C.E. Clayton et al., Phys. Rev. Lett. 105, 105003, 2010.

Trident Intermediate-Scale Laser Facility by Cris W. Barnes (Los Alamos National Laboratory)

The Trident Intermediate-Scale Laser Facility at Los Alamos National Laboratory (LANL) is an extremely versatile neodymium:glass laser system dedicated to high energy density laboratory physics, weapons physics research, and fundamental laser-matter interactions. Trident is a three-beam, ~200 J/beam at the second harmonic for glass (527 nm wavelength), facility with tremendous flexibility and high beam quality (see Figures 1 and 2). Pulse durations varying over 6 orders of magnitude, from 0.5 picoseconds to 1.0 microsecs, can be directed to either of two different target chambers with changeable illumination geometries, including the ability to achieve near-diffraction limited focus. This provides a unique range of capability at one facility from sub-picosecond pulses (and high-intensity laser science) to nanosecond pulses (and laser plasma interaction physics relevant to inertial confinement fusion) to microsecond pulses (and driving flyer plates for supported shock dynamic materials science.) When in short-pulse mode (less than picosecond pulse), a single beam can provide up to 200 TW of power with uniquely controllable and measured pre-pulse contrast of 10 orders of magnitude. A recent external capability review at LANL concluded that "Trident is generating excellent, cutting edge science and is a leading intermediate scale laser system worldwide."

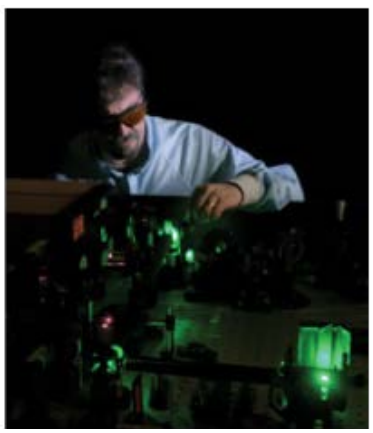

Figure 1. Ray Gonzalez adjusts the Trident front end laser.

Figure 2. Fred Archuleta works in the main laser bay of Trident.

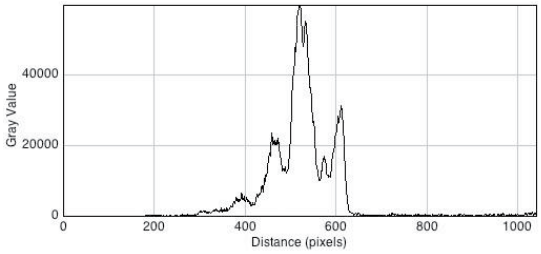

Figure 3. Imaging x-ray Thomson scattering data from Trident Laser (data courtesy of John Benage and David Montgomery). Shown are the raw data (top) and lineout (bottom) from a bright 7.8-keV 2p-1s Ni^{26+} line and its satellites. Such data is being used for make equation-of-state measurements on warm dense matter at the OMEGA Laser facility.

The target areas at Trident are equipped with an extensive suite of diagnostics for research in ultra-intense laser-matter interactions, dynamic material properties, and laser-plasma instabilities. Several important discoveries and first observations have been made at Trident, including laser-accelerated MeV mono-energetic ions, nonlinear kinetic plasma waves, transition between kinetic and fluid nonlinear behavior, as well as other fundamental laser-matter interaction processes.[1-5] The research on laser-plasma instabilities is important to controlling the conditions in National Ignition Facility (NIF) hohlraums during the ignition campaign. The world's best high-intensity conditions are allowing development of isochoric heating techniques and unique probes of warm dense matter important for understanding conditions of boost. Trident holds the world's records for highest energy in laser-driven protons (>120 MeV) and for carbon ions (~1 GeV). Trident's unique long-pulse capabilities have enabled state-of-the-art innovations in laser-launched flyer-plates, and other unique loading techniques for material dynamics research. Measurements have been made on incipient spall in plutonium, on effects of microstructure on shock propagation in beryllium, and for development of damage models in ductile materials such as copper.

While Trident cannot drive radiation transport or hydrodynamic experiments with as high of an energy as Omega or NIF, it provides an important venue for diagnostic and technique development for such experiments. The flexible nature of the facility and its high shot rate make it ideal for developing and testing diagnostics before they are used at the larger facilities. It has been used to develop fluorescent spectroscopy diagnostics for radiation flow measurements, transmission grating spectrometers for measurements of radiation temperature, point backlighters for radiography of hydrodynamic motion, neutron and gamma-ray diagnostics of nuclear burn and imaging x-ray Thomson scattering diagnostics of conditions of warm dense matter. It is routinely used to characterize and calibrate x-ray diagnostics before they are fielded at OMEGA, NIF, or the ORION laser at the United Kingdom's Atomic Weapons Establishment. An example is shown of x-ray Thomson scattering data from Trident (see Figure 3), that can help

characterize the equation-of-state of material in the warm dense matter conditions that are found during boost.

Trident is currently operated as a user facility responsive to needs of LANL programs, but is accepting proposals from external users. It uses a Trident Program Advisory Committee for peer review and proposal evaluation. Visit http://trident.lanl.gov/ for more information or to submit a proposal for run time.

References

[1]B.M. Hegelich et al., Laser Acceleration of Quasi-Mono-energetic MeV Ion Beams, Nature 439, 441-444, 2006.

[2]L. Yin et al., Three-Dimensional Dynamics of Breakout Afterburner Ion Acceleration Using High-Contrast Short-Pulse Laser and Nanoscale Targets, Phys. Rev Lett. 107, 045003, 2011.

[3]B.M. Hegelich et al., Experimental Demonstration of Particle Energy, Conversion Efficiency and Spectral Shape Required for Ion-based Fast Ignition, Nuclear Fusion 51, 083011, 2011.

[4]Palaniyappan et al., Dynamics of Relativistic Transparency and Optical Shuttering in Expanding Overdense Plasmas, Nature Physics 8, 763-769, 2012.

[5]B. Dromey et al., Coherent Synchrotron Emission from Electron Nanobunches Formed in Relativistic Laser–plasma Interactions, Nature Physics, doi:10.1038/nphys2439, October 7, 2012.

Mach-Zehnder Fiber-Optic Links for Inertial Confinement Fusion Diagnostics

by E. Kirk Miller (National Securities Technologies, LLC) and Hans W. Herrmann (Los Alamos National Laboratory)

Measurements of inertial confinement fusion (ICF) experiments at facilities such as the National Ignition Facility (NIF), the OMEGA Laser Facility, and Sandia National Laboratories' Z Machine have driven innovations in detector technology, recording systems, simulation and data analysis for decades. One particular class of detectors, single-point detectors based on fast photodiodes, photoconductive devices or photomultiplier tubes (PMTs), record the time history of the experiment on the picosecond and nanosecond timescales using high-bandwidth digitizers. With increasing neutron yields, recording equipment must be moved from near the target chamber to shielded areas and connected to their respective detectors by cable runs that may measure 30 meters or more. In order to preserve the signal bandwidth, several diagnostics are implementing analog fiber-optic links based on Mach-Zehnder (M-Z) modulators, which can provide bandwidth of well over 10 GHz over many kilometers of fiber. This article describes the operation and evolution of M-Z links for single-point detectors in ICF experimental facilities, based on the Gamma Reaction History (GRH) diagnostic at the NIF.

The M-Z link takes a time-varying voltage signal from the radiation detector, a PMT in the GRH diagnostic, and encodes the signal as amplitude modulation of light in an optical fiber. The schematic for the GRH M-Z link is shown in Figure 1. Light from a continuous laser diode is delivered to the M-Z modulator on polarization-maintaining fiber, and the modulated light returns on single-mode fiber to the recording station. A fraction of the light is tapped off and used in a closed-loop feedback system to control the phase of the M-Z for maximum sensitivity, while the rest of the light goes to a photoreceiver and a 12.5 GHz digitizer for recording. The recorded signal is then processed to provide the PMT signal as volts versus time for analysis of bang time, burn width, yield, areal density and other parameters of the plasma history. With careful design of the electrical and optical signal paths, peak signals of greater than 30 V can be recorded with less than 30 mV baseline noise at bandwidths above 10 GHz.

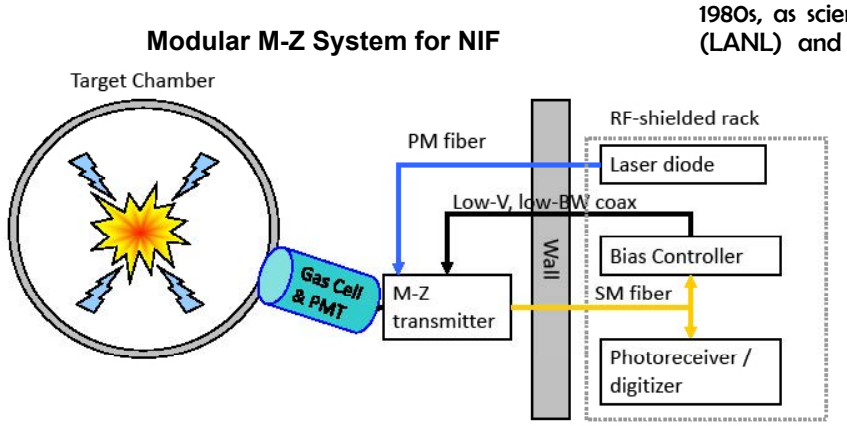

Figure 1. Schematic of M-Z Link for a single NIF GRH gas cell.

M-Z links for ICF diagnostics evolved by adaptation of telecommunications technologies to the unique requirements of pulsed-power experimentation. Technology Readiness Level 1 (TRL-1), the fundamental innovation, can be assigned to the demonstration of integrated-optic traveling-wave modulators in the early 1970s[1] as a crucial part of long-haul telecommunications infrastructure as it moved from copper to fiber. TRL-2, the early conceptualization of the application using modulators for recording signals from radiation detectors, came during the period of underground nuclear testing in the 1970s and 1980s, as scientists from Los Alamos National Laboratory (LANL) and Lawrence Livermore National Laboratory (LLNL) sought to bring high-bandwidth detector signals to the newest high-speed digitizers over long cable runs.

Much of the TRL-3 work was done in support of the underground test program near the end of the testing regime in the late 1980s, culminating in successful fielding of links with somewhat different components than are currently used.[2] In particular, the laser wavelengths used were typically 1,319 nm or 800 nm, and the control systems were not as mature as current systems installed at the major DOE facilities. Notably, the 1,319 nm M-Z system was proposed for target diagnostics at the NIF during the 1990s,[3,4] but

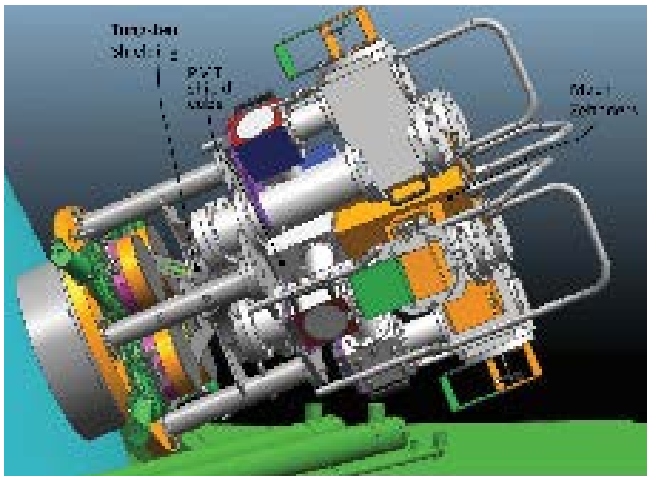

Figure 2. NIF GRH Isometric view showing four gas cells and M-Z transmitters nested behind PMTs.

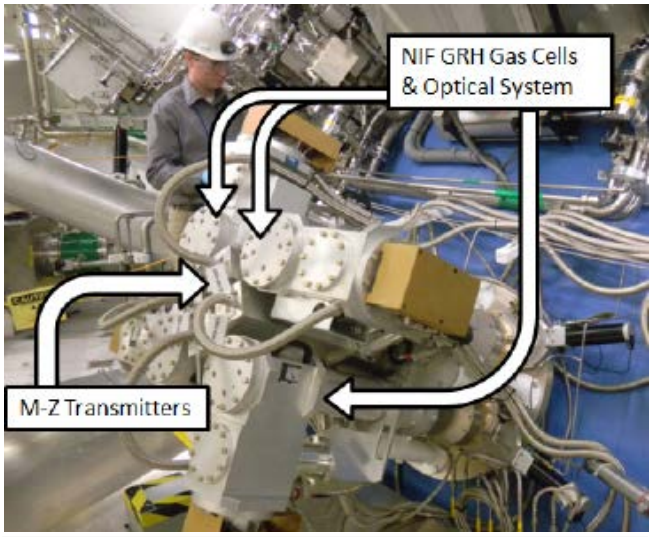

Figure 3. NIF GRH showing interlocking four-cell design with PMTs and M-Z transmitters at the center.

no further effort was pursued to develop the technology at that time because gamma-ray diagnostics were selected over neutron diagnostics for fusion burn measurements, and the gamma-ray system response was limited to 300 ps by the PMTs available, not by the coaxial cable run.

When work began again on M-Z links around 2004, teams at LLNL, LANL and National Securities Technologies, LLC (then Bechtel-Nevada) engineered systems using modern telecommunications components in the 1,550 nm band. During 2005 and 2006, systems were demonstrated at TRL-4 in the laboratory,[5] and then at TRL-5 at OMEGA with the LANL Gamma Cherenkov Detector (GCD).[6]

Based on the demonstration using GCD, the M-Z link was selected for the LANL GRH under development for NIF. In 2009, a single-cell GRH diagnostic was installed at the Omega Laser Facility. The diagnostic was commissioned in February 2009, and the M-Z link was commissioned in May 2009, using control hardware that, while not ready for the sophisticated industrial control systems at NIF, was nonetheless stable over a campaign period of two weeks.[7] This system is now routinely used two to three times per year on high-yield ICF campaigns at OMEGA, with more than 160 shots worth of data collected. With the goal of building a four-channel NIF system, the OMEGA system constitutes the TRL-6 and TRL-7 steps in the M-Z technology development.

The NIF GRH M-Z system design was finalized in the spring of 2010, and qualification of the system at LLNL began in the summer of 2010, constituting TRL-8 for the M-Z link, with the complete detector design shown in Figure 2. One GRH gas cell with the M-Z link was assembled in the staging area for NIF target diagnostics and exercised by NIF engineering staff before installation in the NIF facility. The first high-yield deuterium-tritium (D-T) fusion data were recorded by the NIF GRH M-Z link on January 21, 2011, thus beginning the TRL-9, operational use, of the NIF M-Z link.[8] The complete GRH diagnostic installed on the NIF target chamber wall is shown in Figure 3.

The successful development and installation of high-bandwidth analog fiber-optic data links at the NIF is the outcome of productive collaboration between diagnostic development teams from across the complex over a period of decades. As detector technologies continue to improve and experimental shot plans demand more high-bandwidth recording channels, fiber links like the one developed for the NIF GRH will serve as the model for control systems, data analysis and fielding procedures.

References

[1]I.P. Kaminow, Optical Waveguide Modulators, IEEE Trans. Microwave Theory and Techniques 23, No. 1, pp. 57-70, 1975.

[2]M. Lowry, Optical Guided-wave Devices for Single-transient Instrumentation, in Lawrence Livermore National Laboratory Nuclear Test–Experimental Science Annual Report, Fiscal Year 1988, UCRL-53929-88, Gordon L. Struble, ed., pp. 83-87.

[3]J.M. Mack et al., Los Alamos Contribution to Target Diagnostics on the National Ignition Facility, LA-UR 94-1883 and CONF-940630-16, presented at the 11th Topical Meeting on the Technology of Fusion Energy, New Orleans, LA, June 19-24, 1994.

[4]S.E. Caldwell, S.S. Han, J.R. Joseph, T.L. Petersen, and C.S. Young, Burn History Measurements in Laser Based Fusion, Rev. Sci. Instrum. 68, p. 603, 1997.

[5]M. May et al., High Bandwidth Data Recording Systems for Pulsed Power and Laser Produced Plasma Experiments, Rev. Sci. Instrum. 77, p. 10F504, 2006, and UCRL-JRNL-221078.

[6]E.K. Miller et al., Accuracy of Analog Fiber-Optic Links for Inertial Confinement Fusion Diagnostics, IEEE Trans. Nuc. Sci. 54, No. 6, pp. 2457-2462, 2007.

[7]H.W. Herrmann et al., ICF Gamma-ray Reaction History Diagnostics, J. Phys.: Conf. Ser., v. 244, p. 032047, 2010.

[8]H.W. Herrmann et al., ICF Gamma-Ray Measurements on the NIF, presented at High Temperature Plasma Diagnostics Conference, Monterey, California, May 2012, and submitted for publication in Review of Scientific Instruments.

High Energy Density Experiments at the Omega Laser Facility by John M. Soures and David D. Meyerhofer (University of Rochester Laboratory for Laser Energetics)

The University of Rochester's Laboratory for Laser Energetics (LLE) operates the Omega Laser Facility for DOE/NNSA programs, including Inertial Confinement Fusion Ignition, the high energy density (HED) campaign in support of the Stockpile Stewardship Program, and fundamental science programs for national laboratory, academic, and industrial users. The facility includes two of the most powerful lasers in the world: OMEGA—a 60-beam ultraviolet (UV) neodymium:glass laser capable of producing laser pulses with total peak power of approximately 30 trillion watts (see Figure 1), completed in 1995, and OMEGA EP—a four-beam Nd:glass laser capable of producing infrared (IR) laser pulses with peak power in excess of 1,000 trillion watts (Petawatts) or ultraviolet pulses with energy in the range of 10,000 to 30,000 joules, completed in 2008. For comparison, the peak electric power generating capacity of the United States is less than a trillion watts. The Omega Laser Facility can be readily reconfigured for a wide variety of target and beam configurations, typically overnight between shot days. This includes the possibility of joint OMEGA / OMEGA EP shots where the Petawatt EP beam is propagated into the OMEGA target chamber.

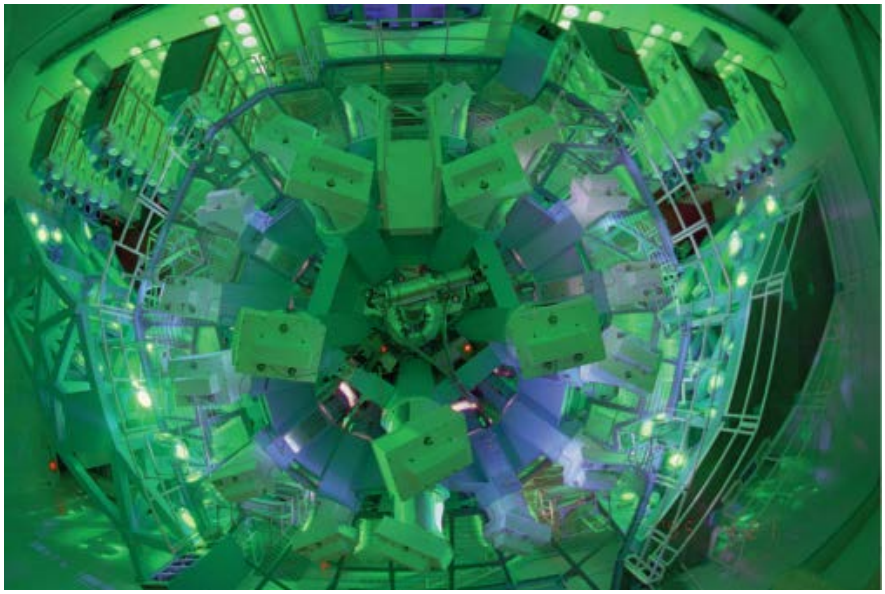

Figure 1. The target area of the 60-beam OMEGA UV laser during a target shot. The white rectangular objects are supports for the mirrors that direct laser energy into the 3-meter-diameter am target chamber near the center of photograph. The bluish color is generated by scattered UV light incident on various surfaces, while the green light is scattered second-harmonic light.

Until the completion of the National Ignition Facility (NIF) in 2009, the lasers in the Omega Laser Facility were the most energetic HED lasers in the world. The Omega Laser Facility remains NNSA's most productive HED facility. It typically produces more than 1,500 target shots per year. With a suite of diagnostics that is second to none, developed over many years of operations, experiments on the Omega Laser Facility provide the HED physics understanding required to support NNSA's missions.

LLE operates the Omega Laser Facility as a user facility for NNSA to support the wide range of missions mentioned above. Users include LLE and the NNSA national laboratories, i.e., Los Alamos National Laboratory (LANL), Lawrence Livermore National Laboratory (LLNL), and Sandia National Laboratories (SNL), scientists and university and business users. Approximately 40% of the Omega Laser Facility time is used by LLE scientists. In recent years, the ignition campaign has been allocated ~40% of the shot time, the HED program has received ~25% of the shot time and 30% has been divided between two fundamental HED science programs: The Laboratory Basic Science (LBS) peer-reviewed program that provides target shots for LANL, LLNL, SNL, and LLE scientists and the National Laser Users Facility (NLUF), a peer-reviewed program for scientists from academia or industry to conduct fundamental science experiments at the Omega Laser Facility. Approximately 5% of the available facility shot time is kept unallocated as a contingency at the start of the each fiscal year.

When focused laser light from such powerful lasers strike small targets, pressures in excess of tens of millions of atmospheres are generated with temperatures of many millions of degrees. These HED conditions provide a unique capability for a broad range of fundamental and applied scientific research, including laser-driven fusion, measurements of the equation of state (EOS) of matter under extreme loading, unstable hydrodynamics of highly energetic fluids and plasmas, studies of the x-ray opacity of plasmas, warm-dense matter physics, fundamental nuclear processes and other HED physics phenomena.

Significant contributions to NNSA's mission have been, and continue to be, made through experiments on the Omega Laser Facility. Discusions of these contributions follow.

Ignition

Many of the techniques, platforms, and diagnostics used in the NIF ignition campaign were developed on Omega. This includes the suite of nuclear diagnostics (yield and ion temperature detectors, neutron imaging, and the Magnetic Recoil Spectrometer to measure areal density). The platform to measure shock timing on the NIF was developed through a couple of hundred shots on OMEGA. Other techniques such as reemission spheres were demonstrated on OMEGA. Indirect-drive experiments provided support for the physics that underpins the ignition effort. This effort included an understanding of laser-plasma interactions in NIF-scale hohlraums, such as crossed beam energy transfer, the effects of two-plasmon decay in hohlraum windows, and measurement of the properties of NIF ablator materials (EOS and burnthrough).

Omega is used to develop the direct-drive ICF concept that provides an ignition alternative and validates understanding of the properties of deuterium-tritium (DT) at high compression. Cryogenic targets (thin spherical ablator surrounding a DT ice shell) are routinely imploded with direct drive on OMEGA. These were the only ignition-relevant cryogenic target implosions before recent NIF implosions. They have produced areal densities up to 300 mg/cm^2, neutron yields above 10^{13} (~20% of that predicted by 1-D simulations), and ion temperatures up to 3 keV. LLE is validating the polar drive ICF concept that will allow direct-drive ignition experiments on the NIF while it is configured for indirect drive.

HED Materials

The Omega Laser Facility is routinely used to measure properties of HED materials and to develop platforms for HED experiments on the NIF. The EOS of materials has been measured with both shock and ramp compression, e.g., Fe and CO_2 as well as a variety of foams. An extended absorption fine structure platform that relies on backlighting from a spherical target implosion has been developed and will be transferred to the NIF as will Rayleigh-Taylor experiments that measure material strength (described in more detail below). X-ray sources for radiation effects and radiography are developed. Direct-drive defect induced mix experiments were performed on OMEGA by LANL, and they recently had their first NIF experiments.

Fundamental Science

A wide variety of fundamental HED science experiments have been performed on the Omega Laser Facility. The propagation of astrophysically relevant shock waves has been studied by multiple groups, including one experiment that led to a further round of Hubble Space telescope observational time and another that focused on understanding the evolution of Super Novas. EOS and other materials properties relevant to planetary interiors is an active area of research. Magnetized HED plasmas are a new field of study that are likely to provide many exciting results over the next few years. The OMEGA EP high intensity Petawatt beams are the highest energy short pulse beams operating routinely worldwide. They have been used in the studies of fast ignition, isochoric heating of materials, the generation and use of high energy proton beams. One series of experiments has created positron jets with significantly higher energy and particle number than any previous ones. The ultimate goal is to generate an HED electron-positron plasma that is thought to be important in the most energetic sources in the universe.

An example of one of the many HED experiments conducted at the Omega Laser Facility is discussed here. When a heavy fluid is accelerated by a lower-density fluid, interface perturbations can grow as a result of Rayleigh–Taylor (RT) instability. Experiments carried out at the Omega Laser Facility by a LLNL team under the HED program, using vanadium samples compressed and accelerated isentropically at pressures greater than one million atmospheres, demonstrated a new RT stabilization mechanism: effective lattice viscosity by phonon drag.[1] The laser–target configuration used for this experiment is illustrated in Figure 2.

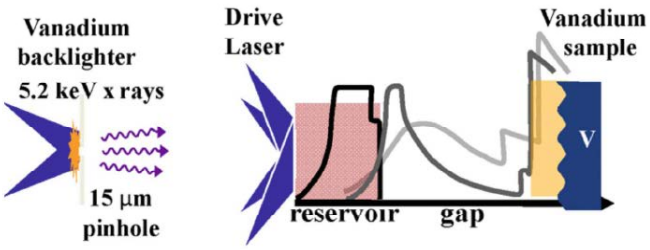

Figure 2. Schematic illustrating the experimental configuration for a vanadium RT strength experiment. The experiment involves the launching of a strong shock through a reservoir, resulting in a plasma release across a 0.3-mm vacuum gap and subsequent stagnation on a vanadium sample creating a ramped pressure drive of ~1 Mbar. The sample has pre-imposed ripples whose growth (because of RT instability) is measured by x-radiography.

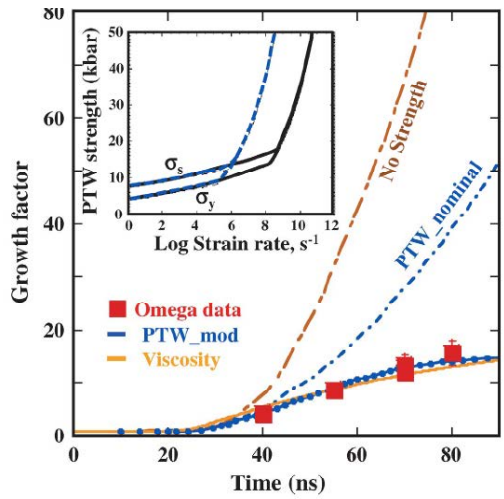

Figure 3. Measured and simulated RT growth factors versus time from Ref. 1. The red squares are the measured experimental data from OMEGA shots. The top brown dashed curve corresponds to the expected growth rate without any material strength. The dotted blue curve gives the result with the Preston–Tonks–Wallace (PTW) strength model,[2] which is strain-rate dependent. The solid blue curve corresponds to the PTW model with adjustments to certain material dependent parameters. The solid orange curve corresponds to an analytic approach treating the material strength as an effective lattice viscosity, with constant viscosity of 400 P.

The results of the experiment are shown in Figure 3. When compared to simulations, they show significant reduction in RT instability growth rate caused by high pressure effective-lattice viscosity.

Facility Governance

The facility scheduling and shot allocation process is managed through the Facility Scheduling and Advisory Committee (FASC), which meets annually in June to set the facility schedule for each fiscal year based on guidance from DOE/NNSA. The FASC includes members from the national weapons laboratories representing both the ignition and the HED campaigns as well members from LLE and the fundamental science user community. More than 50% of the target shots conducted at the Omega Laser Facility

are for external users (from the national laboratories, and U.S. universities and industry). The Omega Laser Facility is a member of the National User Facility Organization (NUFO) and has a very active, independently managed users group—the Omega Laser Users Group (OLUG)—with more than 300 members. Omega is a mature user facility, and the basic governance process is unlikely to change in the future. Even with the NIF being "fully" operational, there is still significant demand for shot time on Omega (this year it was more than twice that available in each category). It is expected that this demand will continue into the foreseeable future.

References

[1]H.-S. Park et al., Phys. Rev. Lett. 104, 135504, 2010.

[2]D.L. Preston, D.L. Tonks, and D.C. Wallace, J. Appl. Phys. 93, 211, 2003.

Access to the Omega Laser Facility for Fundamental Science Shots

Laboratory Basic Science

Annual solicitation run by LLE, typically open for one month in the second quarter.

National Laser Users Facility

Biannual solicitation run by NNSA, typically the second quarter of the previous fiscal year. The results of the FY 2013 - FY 2014 NLUF Solicitation have been announced. The next solicitation is scheduled for the second quarter of FY 2014.

For more information, contact John Soures at jsou@lle.rochester.edu or visit www.lle.rochester.edu.

Doubling the Electric Power Generated by a Linear Transformer Driver (LTD) Cavity

by B.S. Stoltzfus, J.R. Woodworth (Retired), W.E. Fowler, G.R. McKee, M.E. Savage, M.E. Sceiford, and W.A. Stygar (Sandia National Laboratories); H.D. Anderson and M.J. Harden (National Security Technologies, LLC), and J.R. Blickem (Raytheon Ktech)

Linear transformer drivers (LTDs) will be the building blocks of next-generation petawatt-class pulsed-power accelerators. Thousands of LTD cavities will be stacked together in a series-parallel combination to achieve peak powers substantially greater than that of Sandia's 80-terawatt Z Machine. The size and cost of such accelerators will be determined by the amount of power that can be generated by a single LTD cavity (see Figure 1). We have recently increased the power output of a cavity from 41 to 79 gigawatts (see Figure 2) and successfully tested the cavity at the higher power on 1,400 shots. The power was increased without increasing the outer dimensions of the cavity, thereby reducing by a factor of two the size and cost of future LTD accelerators. The increase was achieved by using new field-distortion gas switches (see Figure 3), low-inductance 60-nanofarad General Atomics capacitors, and Metglas magnetic cores. We have also reduced the standard deviation of the cavity's output current by a factor of four, from 2% to 0.5%. Hence the standard deviation of the current generated by a future 300-terawatt LTD accelerator powered by 4,000 such cavities would be 0.01%, which is a factor of 100 better than required. These performance improvements are critical in shaping our ability to support NNSA's stockpile stewardship mission with precision experiments conducted on superpower accelerators.

Figure 1. 79-GW LTD Cavity.

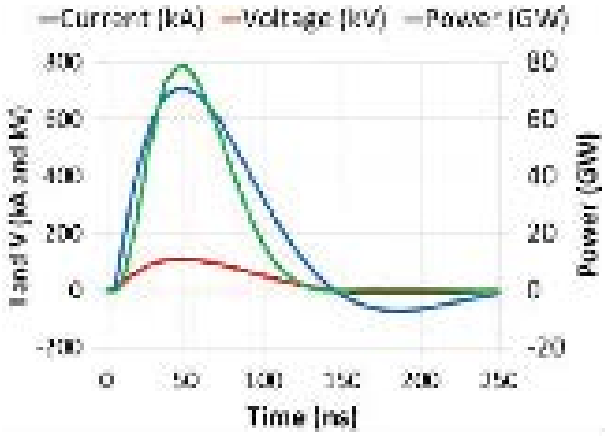

Figure 2. LTD current, voltage, and power.

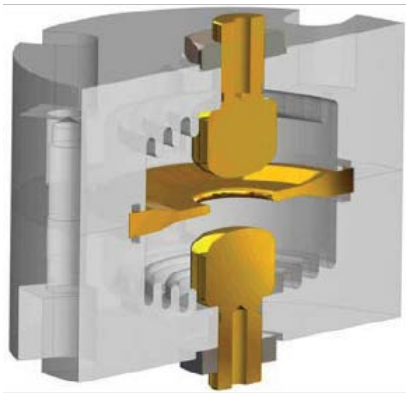

Figure 3. New field-distortion LTD gas switch.

39th IEEE International Conference on Plasma Science (ICOPS)

Held at the Edinburgh International Conference Centre (Edinburgh, United Kingdom) from July 8-12, this year's conference boasted another strong technical program. A total of 821 abstracts from 43 countries were accepted, representing both the fundamental and applied areas of plasma science. More than one-fourth (27%) of them were submitted by the U.S. plasma science community. The program included 299 oral presentations, and there were more than 515 posters on display during the poster sessions. Award presentations from the conference follow.

Plasma Science and Applications Award (PSAC)
– Professor Andrew Ng

IEEE Marie Sklodowska-Curie Award
–Academician Gennady Andreevic Mesyats

PSAC Outstanding Student in Plasma Science Award
– Boaz Rubinstein

Outstanding Paper Awards
– Dror Alumot-Weizmann
– Tiny Verreycke

Runners-up Outstanding Paper Awards
– Marc Ramsey
–Andreas Schlaich

For more information, visit the IEEE website, http://www.ieee.org/index.html.

Boaz Rubinstein (far left) was awarded the PSAC Outstanding Student in Plasma Science Award by Steve Gold. Jerry Chittenden presented Dror Alumnot-Weizmann (middle) and Tiny Verreyckerd (right) with Outstanding Paper Certificates.

Reproducibility of Sandia National Laboratories' 80-terawatt Z Accelerator by J.L. Porter and the Z Accelerator Team (Sandia National Laboratories)

The Sandia National Laboratories' Z Accelerator Team demonstrated that the current pulse delivered by Z can be reproduced to within 2%. The difference between pulse "shapes" generated on two Z shots, taken more than a year apart, is typically 1%, even on shots that produce as much as 26 megaamperes (MA) of current. This capability has allowed us to conduct precision equation-of-state experiments on a wide variety of materials, including plutonium and uranium, and precision laboratory-astrophysics and radiation-physics experiments using a dynamic hohlraum. The capability is illustrated by the three figures below. Shot 2227 (see Figure 1) was a pulse-shape development shot conducted to prepare for shot 2255, the September 2011 plutonium shot. Shots 2104 and 2250 (see Figure 2) were cylindrical-shock experiments performed with a beryllium liner. Shot 2250 completed a data set that began with shot 2104 (on which we imaged the shock as it propagated through the liner). To complete the data set, it was essential to reproduce the current pulse shape achieved on shot 2104 (see Figure 3). Moreover, over the last 14 months, 24 nominally identical dynamic-hohlraum shots have been conducted. These full-accelerator-energy shots, taken at an 85-kilovolt Marx voltage with all 36 modules, delivered 26 MA to the load. For these shots, the current pulse shapes at the Z insulator stack, magnetically-insulated transmission line (MITL) system, and load varied by 0.7%, 0.7%, and 0.8%, respectively. The standard devations of the peak currents were 1.8%, 1.7%, and 2.3%; the standard deviations in the current pulse timing were 2.7 ns, 2.6 ns, and 2.9 ns. The third figure plots the MITL currents generated on these 24 shots. The excellent reproducibility was made possible by numerous Z enhancements over the last four years, as a result of collaboration among Sandia National Laboratories staff in the Pulsed Power Sciences Center and their Raytheon-Ktech colleagues.

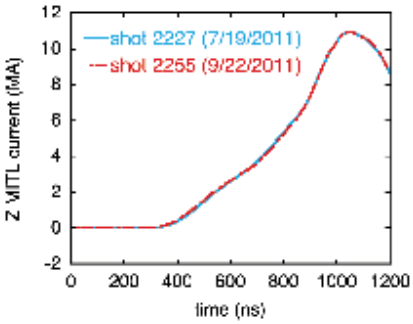

Figure 1

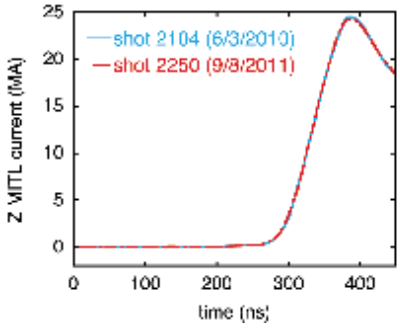

Figure 2

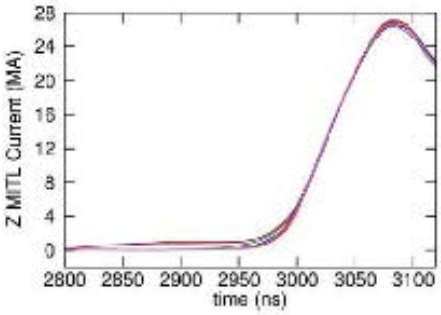

Figure 3

The Stewardship Science Graduate Fellowship Program Welcomes the 2012 Class

by the Krell Institute

The five doctoral candidates (see Figure 1) NNSA named to the Stewardship Science Graduate Fellowship (SSGF) Program in the spring have begun classes. This class increases enrollment in the program to 21 students researching areas of interest to stewardship science: high energy density physics, nuclear science, or materials under extreme conditions and hydrodynamics. The fellowship covers all tuition and fees and provides a $36,000 annual stipend, a $1,000 annual allowance for research or professional development, a 12-week research practicum at an NNSA national laboratory and travel to the SSGF annual conference in Washington, D.C. Read about the new fellows below.

The 2012 class of NNSA SSGF Program fellows. Back row (L-R): J. Scott Moreland and Hong Sio. Front row (L-R): Samantha Lawrence, Mareena Robinson, and Sabrina Strauss.

Samantha Lawrence will study materials science and engineering under David Bahr at Washington State University, comparing small-scale and bulk-like materials testing methods to understand how sample size, surfaces and environment affect metal deformation and fracture. Lawrence plans to couple nanomechanical testing data with advanced characterization techniques to identify the contribution of defects – especially dislocations, grain boundaries and interfaces. She hopes to develop a predictive model for engineering materials to separate different effects across multiple length scales. Combined experimental deformation and fracture data could be used to build the equivalent of a nano-forming limit diagram (FLD) for specific materials systems. According to Lawrence's research statement, "Together, the multiscale model and nano-FLD could be used to design or analyze submicron structures and guide research."

J. Scott Moreland is a student at Duke University working under Steffen Bass. Moreland researches the properties of quark-gluon plasmas (QGP) and collider experiments that recreate this early state of the universe. An experimental goal is extracting the QGP's equation of state and hydrodynamic transport coefficients, especially its shear viscosity to entropy ratio. Computer simulations can help extract this information from experiments. One observable, anisotropic flow, is sensitive to both QGP shear viscosity and initial state geometry. Moreland studies improvements to theoretical models used to initialize these simulations, fitting anisotropic flow data to make the extracted QGP shear velocity more accurate. He has probed the energy-dependent growth of Gaussian nucleons and quantum fluctuations in the quark and gluon fields of participant nucleons, effects that refine models used to generate the initial state.

The research of **Mareena Robinson**, conducted under Richard Lanza of the Massachusetts Institute of Technology (MIT), will quantify the nitrogen-13 ammonia produced from high-energy proton interactions with oxygen inside a compact high-field superconducting isochronous cyclotron. Robinson is designing and building a flow-through system to measure activity of the irradiated water by detecting annihilation photons from N-13 positron decay. The scheme uses sodium-iodide detectors to capture annihilation gamma incident energy in single and coincident detector configuration. The data will be used to calculate N-13 ammonia activity, she wrote in her research statement. Robinson gained experience with particle detection as a summer 2012 National and Homeland Security intern at Idaho National Laboratory, where she researched neutron detection with high-purity diamond solid-state detectors. Such devices could provide improved neutron detection for use in such applications as in-core power monitoring.

Hong Sio of MIT is working with advisor Richard Petrasso. Sio is part of the MIT Laboratory for Advanced Nuclear Diagnostics, which develops and calibrates three charged-particle diagnostics for the National Ignition Campaign at the National Ignition Facility and the University of Rochester's Omega Laser Facility. He is studying inertial confinement fusion implosion physics during shock burn, when spherically convergent shocks launched by lasers converge at the center of the DT capsule. In this regime, treating the problem hydrodynamically is insufficient, according to his research statement. Sio uses charged-particle diagnostics of shock burn fusion products to study kinetic effects as expressed through anomalous yield ratio, delayed nuclear burn and overall reduced yield as compared to one-dimensional hydrodynamics simulations.

Sabrina Strauss is pursuing a doctoral degree in physics at the University of Notre Dame and intends to focus on the interface between low energy nuclear physics and astrophysics. Strauss comes to the fellowship after serving two summer internships at Oak Ridge National Laboratory (ORNL). During the first internship, she helped develop a high-rate ionization chamber to detect and measure ionizing radiation. ORNL scientists continue to use the chamber. During her second summer and her senior year of undergraduate studies at Rutgers University, Strauss analyzed data from a ^{24}Mg(p,d) reaction experiment conducted at ORNL.