ACCURACY PERFORMANCE ACCOUNTABILITY

# NRC Welcome Remarks and Perspectives

Peter J. Habighorst, Branch Chief
Office of Nuclear Material Safety and Safeguards
U.S. Nuclear Regulatory Commission

- NRC Mission and Strategic Goals
- NMMSS has a direct role in accomplishing NRC's mission
- Importance to domestic and international stakeholders

# NMMSS: Today and Tomorrow

- 2012 Reporting
- Continued success of NMMSS due to:
  - Timely and accurate reporting by users
  - Good teamwork between NNSA/PSI and NRC
- New Interagency Agreement

# Challenges

- Electronic Submittal Methods
- Streamlining Foreign Obligations Tracking
- Knowledge Management of NMMSS staff

ACCURACY PERFORMANCE ACCOUNTABILITY

# STATE OF NMMSS

Brian Horn, NRC
Peter Dessaules, DOE/NNSA

# Overview

- NMMSS has had a highly successful year in which it reduced reconciliation and closing times, improved report products, and delivered commitments to DOE/NNSA, NRC, and other government agencies on schedule.
- This would not be possible without your efforts.

# Mission Statement

- NMMSS is the U.S. Government's official information system containing current and historical accounting data and other related nuclear material information collected from both government and commercial nuclear facilities.
- NMMSS provides output reports to those facilities and other interested parties, primarily U.S. government offices charged with the management and safeguarding of nuclear materials.

# SPONORS

NMMSS is cosponsored by the:

- National Nuclear Security Administration's (NNSA) Office of Materials Integration within the U.S. Department of Energy
- U.S. Nuclear Regulatory Commission.

# NMMSS Timeline

| Year | Activity |
|---|---|
| 1964 | System development began at Oak Ridge, Tennessee |
| 1965 | Inventory and MBR data were added to the system |
| 1968 | Transaction data collection began |
| 1975 | Formation of ERDA and NRC and separation of NMMSS oversight |
| 1979 | International data backfit began after passage of the NNPA |
| 1995 | System began operation on a PC platform |
| 2003 | Obligations Accounting begins |
| 2009 | NRC lowered the inventory reporting threshold for SNM and certain source materials |

# Size of NMMSS

- The NMMSS database is ~ 47 gigs
  - Inventory records date back to 1966
  - Transaction records date back to 1950
  - Material balance records date back to 1965

# Execution

- Objectives and goals are accomplished by:
  - Tracking NM located within the U.S.
  - Tracking NM entering/exiting the U.S.
  - Tracking obligated NM within the U.S.
  - Reporting selected facility data to the IAEA
  - Producing and distributing NM reports

# Customer Based Products

- Provide NM information to DOE/NNSA, NRC, and other government agencies in five areas:
  - Regulatory functions
  - International programs
  - Materials management
  - Program management
  - Financial management

# Criteria for Success

- Success hinges on interdependencies
- NMMSS operations
  - Ease of data collection (SAMS, Fillable Forms)
  - Efficiency of data processing (edit checks)
  - Flexibility of report production/distribution (Excel reports)
  - Timeliness, report accuracy, data interpretation/analysis
- Data submitters
  - Accuracy of data (error rates, reconciliation)
  - Currency of data (timeliness, electronic submission, XML2)
- Subject Matter Experts

# Daily Operations

- Processed 1,034,306 inventory records
- Processed 18,631 transactions with an overall error rate arround1%
- Issued 14,448 standard reports
- Completed 49 special request for data (international, heath studies, Congressional inquiries)

# Closing of Accounting Month

NMMSS closed 12 processing months on schedule and within target: averaged 24 days for 2012 – down form 29 days for 2011

**Closing of the Accounting Month**
**(Number of days closed after month end)**
**January 2012 - December 2012**

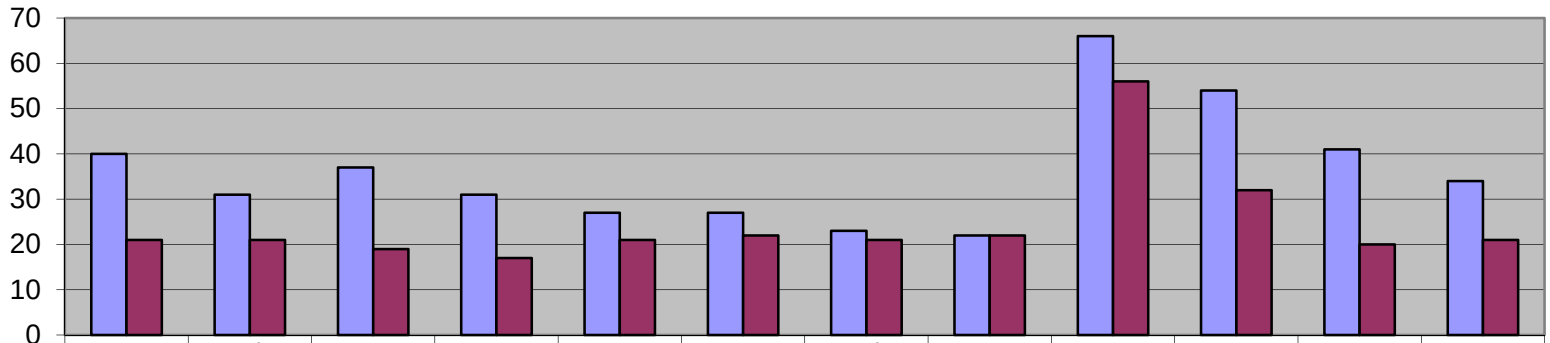


| | Jan '12 | Feb | Mar | Apr | May | Jun | Jul | Aug | Sep | Oct | Nov | Dec |
|---|---|---|---|---|---|---|---|---|---|---|---|---|
| Avg | 40 | 31 | 37 | 31 | 27 | 27 | 23 | 22 | 66 | 54 | 41 | 34 |
| 2011/2012 | 21 | 21 | 19 | 17 | 21 | 22 | 21 | 22 | 56 | 32 | 20 | 21 |

# Reconciliation

- DOE Annual Reconciliation September 2012
  - 49 RIS Codes required to reconciled with NMMSS
  - 63% were reconciled within 2 days of receipt
  - Closed on 11/26/2012, 18 days ahead of last year and 10 days ahead of historical average
- NRC Reconciliations
  - NMMSS received 267 reconciliation packages for 2012
  - 33 packages were reconciled on the same day as receipt
  - Average is 13 days from receipt to closure

# Training

- Conducted 5 training classes for data submitters/users
  - 3 NRC Training Course in Germantown, MD
  - 1 DOE NMMSS II Course in Germantown, MD
  - 1 DOE NMMSS I Course in Oak Ridge, TN
  - A total of 50 students attended the training
- Committed to user training. Published schedule for remainder of 2013 and 2014.

# Focus on Electronic Submission

- Electronic Submission to NMMSS
  - 52% of facilities reporting exclusively in XML2 format
    - Preferred format as it requires no conversion
    - Need to open each file to determine file type
    - 90% of Transactions
  - 12% of facilities reporting in other electronic formats
    - XML1 and 80 Column  reporting requires conversion
    - 7% of Transactions
  - 36% of facilities reporting in hardcopy format
    - Requires manual input
    - Least effective and error prone
    - 3% of Transactions

# Software Enhancement Agenda

- Automation of annual obligation reports for selected countries
- Computerization of the obligation process
- Rewrite of the IAEA reporting module
- Develop standard reports in support of National Institute for Occupational Safety and Health (NIOSH) studies

# Summary

- NMMSS has had a very successful year.
- Success would not be possible without our user community which remains the driving force behind NMMSS performance. Thank you:
  - Data submitters
  - Data customers
  - NMMSS operations team
  - DOE/NRC management team
- Special awards and recognition

ACCURACY PERFORMANCE ACCOUNTABILITY

# Waste Confidence Activities

Andy Imboden, Branch Chief
Waste Confidence Directorate, U.S. NRC

# Agenda

- What is Waste Confidence?
- Brief History
- 2012 Court of Appeals Decision
- Impacts
- Path Forward
- Opportunities for Participation
- Contact Info and Resources

# Waste Confidence

- Generic "Findings" on Spent Fuel Storage and Repository Availability
  - Safety and environmental findings
  - Decision and Rule (10 CFR 51.23)
- Relevant to new and operating reactor licensing, and storage licensing

# History

- 1979 Court of Appeals decision
- First Commission decision in 1984
- Five Findings
- Periodic review

# Court Remand

- September 2011 challenge
- Decision on June 8, 2012
- Three deficiencies in the NRC's NEPA analysis:
  - No-repository analysis
  - Spent fuel pool leaks
  - Spent fuel pool fires

# Impact

- Link to reactor and storage licensing
- No final licenses until remand resolved
- Licensing and adjudication continues

# Path Forward

- Generic environmental impact statement and rule within 24 months (September 2014)
- Ample opportunity for public participation
- Waste Confidence Directorate was formed
- Immediately began environmental scoping

# Schedule

| | |
|---|---|
| **September 2013** | Publication of draft GEIS and proposed Rule; begin 75-day public comment period |
| **September and October 2013** | 10 public meetings<br>(2 U.S. NRC Headquarters, 8 regional) |
| **November 2013** | End of 75-day public comment period |
| **August 2014** | Publication of final GEIS and Rule |

# Status

- NRC staff is on schedule
- EIS scoping October 25 – January 2
  - Four public meetings
  - Roughly 700 commenters (~1,700 comments)
  - More than 2,000 requests to re-notice
  - Scoping Summary Report issued March 4
- Development of draft GEIS and proposed Rule well underway
- Planning for public meetings

# Public Meetings

- 8 regional public meetings
  - White Plains, NY
  - Boston, MA
  - Minneapolis, MN
  - Denver, CO
  - San Luis Obispo, CA
  - San Clemente, CA
  - Toledo, OH
  - Charlotte, NC
- 2 nationally webcast NRC HQ meetings
  - Accessible online and by phone

# Tracking Progress and Participation

- Status Updates
  - Monthly status teleconferences
  - WCOutreach@nrc.gov and Waste Confidence website
- 75-day public comment period on draft GEIS and proposed Rule
- Submit comments via email, fax, mail, Regulations.gov, or at meetings

# Resources

- Sarah Lopas, Communications PM
  1-800-368-5642
  Sarah.Lopas@nrc.gov

- WCOutreach@nrc.gov e-mail list

- Waste Confidence website:
  http://www.nrc.gov/waste/spent-fuel-storage/wcd.html

ACCURACY PERFORMANCE ACCOUNTABILITY

# Agreements for Peaceful Nuclear Cooperation and Reciprocal Obligations

James R. Warden
U.S. Department of State

# Presentation Outline

I. Introduction

II. Agreements for Peaceful Nuclear Cooperation

III. Reciprocal Obligations

IV. Conclusion

# I. Introduction

- Agreements for peaceful nuclear cooperation between and among governments allow for the lawful export of nuclear material and equipment
  - When concluded by the United States, these agreements are commonly referred to as “123 agreements”
- These agreements create obligations on states to fulfill conditions contained in the agreement and provide information about how material and items transferred subject to the agreement are being used

# II. Agreements for Peaceful Nuclear Cooperation

- Legal authority to conclude an agreement for peaceful nuclear cooperation comes from Section 123 of the Atomic Energy Act of 1954, as amended
- 123 agreements establish a legal framework under which U.S. suppliers may export:
  - Nuclear material (reactor fuel)
  - Nuclear reactors
  - Significant reactor components (pressure vessels, calandrias, complete control rod reactor systems, primary coolant pumps, on-line refueling mechanisms)

# II. Agreements for Peaceful Nuclear Cooperation

- Benefits of a 123 agreement
  - Nonproliferation
    - U.S. consent rights attach to U.S.-obligated material and equipment for enrichment, reprocessing, storage, retransfer
    - Full scope IAEA safeguards and physical security requirements
  - Commercial
    - Agreement provides the legal foundation for U.S. suppliers to export material and equipment
    - Network of 123 agreements allows U.S. companies to partner with foreign firms for additional market opportunities (e.g. Westinghouse content in KEPCO UAE bid)

# II. Agreements for Peaceful Nuclear Cooperation

- The United States has 24 123 agreements in force with:
  - Argentina
  - Australia
  - Brazil
  - Canada
  - China
  - Colombia
  - Egypt
  - EURATOM (27 countries)
  - India
  - Indonesia
  - Japan
  - Kazakhstan
  - Republic of Korea
  - Morocco
  - Norway
  - Russian Federation
  - South Africa
  - Switzerland
  - Thailand
  - Turkey
  - Ukraine
  - United Arab Emirates
  - International Atomic Energy Agency
  - Taiwan (through non-gov't channels)

# II. Agreements for Peaceful Nuclear Cooperation

- Current 123 agreement negotiations
  - Republic of Korea (current agreement expires March 2014)
  - Taiwan (current agreement expires June 2014)
  - Saudi Arabia
  - Jordan
  - Vietnam
- Upcoming 123 agreement negotiations
  - China (current agreement expires December 2015)
  - International Atomic Energy Agency (current agreement expires August 2014)

# III. Reciprocal Obligations

- Evolution of Obligations in 123 Agreements
  - In early years of U.S. global nuclear cooperation, 123 agreements were predominantly unilateral, supply agreements with one way obligations
  - In late 1970s, 123 agreement nonproliferation conditions became more strict while additional suppliers entered the market
    - In response, modern 123 agreements carry reciprocal obligations
    - The U.S. is now commonly bound to conditions and limitations imposed by the partner state
    - Obligations only attach when items are transferred subject to the Agreement

# III. Reciprocal Obligations

- Reporting Requirements
  - Cooperation patterns with major trading partners are well established (Australia, Canada, Euratom, Japan)
  - The United States maintains administrative arrangements with these states specifying detailed procedures to account for obligated material
  - Led by the Department of Energy (DOE), the United States has negotiated and intends to negotiate administrative arrangements with our increasing number of nuclear partners

# III. Reciprocal Obligations

- Reporting Requirements (continued)
  - The United States strives for standard language in its 123 agreements and administrative arrangements, but different partners may have different sensitivities and priorities
  - Variance in reporting requirements may result
  - As the number of civil nuclear programs grow, this trend may continue

# III. Reciprocal Obligations

- What current/future partners are likely to export large quantities of their obligated material to United States?
  - China?
  - Republic of Korea?
  - Southeast Asian partners?
  - Kazakhstan?
  - Russia?
  - India?

# IV. Conclusions

- 123 agreements provide the legal foundation for the export of U.S. material, reactors, and significant reactor components
- The number of 123 agreements and U.S. nuclear trading partners is likely to rise in the next few decades
- Due to reciprocal obligations, inventory reporting requirements are likely to increase in quantity, variety, and become more sensitive to policy makers, and consequently also to industry

THE NUCLEAR MATERIALS MANAGEMENT AND SAFEGUARDS SYSTEM (NMMSS)

NMMSS 2013

USERS ANNUAL TRAINING MEETING

MAY 20-23, 2013 - ST. LOUIS, MISSOURI

# Contact Information/Questions


James R. Warden

Office of Nuclear Energy, Safety and Security

Bureau of International Security and Nonproliferation

U.S. Department of State

202.736.4431 wardenjr@state.gov


# Questions/comments?

# Use of NMMSS Data in Support of the American Medical Isotopes Production Act of 2012

Peter Habighorst

Nuclear Regulatory Commission

# Background

- Section 3175 of the act requires:
  - Chairman of NRC, after consulting with other relevant agencies, to submit to Congress by January 2, 2014 a report detailing certain U.S. exports of High Enriched Uranium (HEU)*

* Uranium enriched to 20% or more in U-235

# Information in report

- "Current" disposition of U.S. exports of HEU used as fuel or targets in research or test reactors and including:
  - **Location of HEU**
  - Whether HEU is irradiated
  - Whether HEU has been used for purpose stated in export license
  - If used for alternate purpose, was it approved by the NRC
  - **Year of export and re-import**
  - Current physical and chemical form
  - Is adequate physical protection being applied to the stored HEU

# Obtaining NMMSS data

- Started by making three special requests of the NMMSS database*
  - HEU exports from USA
  - HEU imports to USA
  - U.S. HEU transferred between other countries

* HEU calculated by NMMSS

# NMMSS data interpretation

- NMMSS reports documented all variations of Form-741 reporting:
  - Shipper declaration A-A
  - Receiver declaration A-B
  - Shipper corrections A-C
  - Receiver corrections A-D
  - Project number changes A-M
  - Ownership changes A-M

# NMMSS data interpretation, cont.

- Modified special request to document last version of transaction
  - Reduced #741's from ~11,000 to ~4,400
  - A good learning exercise for several NMMSS and NRC staff

# NRC internal actions

- Prepare a list of all research and test reactors to which the US has exported HEU
- Questions to answer
  - How to define “test reactor”?
  - Should we include critical assembly in the report?
  - Should we include sub-critical assembly in the report ?

# NRC Internal actions, cont.

- How to identify HEU exported for research/test reactors from the list of all HEU exports?
  - Assembled a list of 280 HEU export licenses (AEC and NRC issued)
  - NMMSS prepared a fourth report, based on export licenses
  - Identify HEU exports for other purposes
    - Power reactors -48 export licenses
    - Standards -General export licenses
    - Fission chambers -1 export license & General licenses
    - Lab samples -1 export license & General licenses

# NRC Internal actions, cont.

- Exports to power reactors in Canada, Germany and Japan were identified:
  - KNK, THTR, AVR, JOYO, FUGEN, Bruce
- General licenses used for most shipments under 100 grams of HEU
  - Standards
  - Fission chambers
  - Lab samples

# NRC Internal actions, cont.

- Consider deleting exports, imports, retransfers of less than 100 gram HEU from NMMSS reports
  - Reduces # 741's by over 50%
  - Should have no impact on quantity of HEU exported for research reactor fuel or medical targets
- Obtain and evaluate non-NMMSS data available from DOE
  - DOE's Global Threat Reduction Initiative ?
  - Reduced Enrichment for Research and Test Reactor project ?
- Identify and analyze information gaps

# Observations

- Reporting Identification Symbol (RIS) is basis for NMMSS reporting
- Identified two or three 741's where RIS's appear to be entered into NMMSS in error, XYZ does an A-M to XZY
- A small number of RIS's were de-activated in one country and replaced by new RIS's. Makes following material flow a challenge
- Some 741's document movement to country (3 letter RIS) not a facility (4 letter RIS)

# NMMSS data

- Shows that HEU has been exported to and used in approximately 90 research reactors in 35 countries
- Is being used to prepare the year by year summary of the quantity of HEU, used in fuel or medical targets in research or test reactors that was exported and re-imported into the USA

# Status of NRC report

- We are in the process of providing the working group final information from NMMSS documenting:
  - HEU has been exported to and used in approximately 90 research and test reactors in 35 countries,
  - Year by year listing of HEU exports and re-imports to the USA,
  - Transfers of HEU between other countries,
  - Estimates of HEU remaining in other countries.

# Status of NRC report

- The working group will:
  - consult with other government agencies
  - use the NMMSS data, and other available information, to complete the report to Congress

ACCURACY PERFORMANCE ACCOUNTABILITY

# Global Monitoring of Uranium Hexafluoride Cylinders

**Jessica White-Horton, Oak Ridge National Laboratory**

**NMMSS Users Annual Training Meeting,**

**May 21, 2013**

# Outline

- Project Context & Current Challenges
- NNSA 5-year Program Plan
- Concept of Operations
- Stakeholder Views
- Conclusions and Next Steps

Model 30B cylinder for low-enriched uranium (LEU)

Model 48Y cylinder for natural uranium

# Context for NNSA $UF_6$ Project

- Approximately 20,000 cylinders are in active circulation at any time
  - Each cylinder can contain enough $^{235}U$ to make two significant quantities (SQs) of HEU
  - No industry-wide standard for uniquely identifying cylinders
  - No single listing of all $UF_6$ cylinders being used around the world

- Not all LEU is under IAEA safeguards when produced & shipped--NWS

- Enrichment capabilities (declared and clandestine) have increased in the last decade

- A small clandestine enrichment facility with a capacity of 10,000 – 25,000 SWU/year could convert:
  - Contents of a 48Y cylinder containing natural $UF_6$ into an SQ of HEU in ~3 months – 1 year
  - Contents of a 30B cylinder containing LEU (~3-5% enriched) into an SQ of HEU in ~30-90 days

# Current Industry Practices

- Each facility has its own system for numbering and marking cylinders
  - No industry-wide standard for numbering
  - No widespread automated system exists

# Current Safeguards Challenges

- Safeguards efficiency
  - Inconsistent application of cylinder IDs across industry
    - Increases likelihood of error in reading and recording IDs
    - Limits ability for IAEA to automate on-site inspection tasks and to efficiently match transfers
  - Time to locate and identify cylinders
    - Consumes IAEA inspector time during inspections (Inspection days at larger GCEPs already exceed 100 days/year)
    - Reduces detection probabilities (IAEA resource constraints)

# Current Safeguards Challenges (Continued)

- Safeguards effectiveness
  - Detecting diversion before a SQ of HEU can be produced
    - From on-site cylinder inventories
    - During transit
  - Detecting undeclared production pathways (using undeclared cylinders)
  - Detecting clandestine enrichment facilities
  - Transit matching
    - Time delays
    - Manual vs automatic matching

# NNSA $UF_6$ Cylinder Monitoring Project Scope

- Enhance IAEA inspection capabilities to detect diversion and undeclared production in a more effective & efficient manner
- Develop a concept for a global identification and monitoring system for $UF_6$ cylinders
- Demonstrate at a proof-of-concept level the principal elements of a system that uniquely identifies $UF_6$ cylinders throughout their life cycle that can be used by both operators and the IAEA

# Task 1: Key Findings

- An industry-wide UID must be:
  - Tamper-indicating for use by IAEA
  - Capable to be automatically scanned or read
  - Able to withstand a challenging/harsh environment
  - Capable to be applied during cylinder fabrication or in the field
- The IAEA detection of certain diversion/misuse scenarios could be improved
  - Excess production at a declared facility
  - Diversion in less than a year
  - Production at a clandestine facility
  - Diversion in transit
- Continued engagement with stakeholders is critical

# Concept of Operations

- The concept for a global cylinder monitoring system for $UF_6$ cylinders has 3 principle components:
  - Standardized ***unique identifier*** (UID) for each cylinder
  - Unattended and portable ***UID reader systems*** at IAEA safeguarded facilities
  - Collection of safeguards-relevant cylinder information (e.g., UID, location) into an access-controlled, ***global "registry"***

# Unique Identifier

Concept

- Standardized format/design
- Unique across all industry
- Read remotely (by portable or unattended readers)
- Applied during fabrication and/or during recertification
- Usable by both the operator and IAEA
- Tamper-indicating for use by IAEA

# Unique Identifier

Benefits

- Improves cylinder identification and reporting to SSAC and IAEA
  - Eliminates reading and transcription errors
  - Eliminates need for operator to apply additional labeling
    - Eliminates potential confusion over ID in reports (nameplate vs labels)
- Tamper-indicating feature increases confidence that nameplates have not been altered.
- Rapid reading of IDs by operator, regulators, and IAEA
  - Reduced inventory times
  - Reduced personnel exposure times in cylinder yards
- Can be integrated into plant systems (operations, safety, MC&A)
  - Potential for shared-use instruments

# UID Reader Systems

## Concept

- Portable readers can be used to inventory cylinders in storage areas
- Unattended readers can be installed at strategic locations
  - Cylinder receipt and shipment
  - Key operational points (in IAEA safeguarded facilities)

# UID Reader Systems

Benefits

- Both operators and IAEA inspectors can improve efficiency in verifying cylinders
  - Reduced PDIs to verify flow and static inventories (~20-40/year or more)
  - Will strengthen effectiveness of unannounced inspections (SNRIs, ELFUAs)
    - Inspectors can redirect site effort to spend more time verifying design and operations
- New capability for IAEA to detect undeclared production pathways
  - Unattended, reader systems can confirm that only declared, registered cylinders are being processed
    - Detect undeclared feed pathways

# UID Reader Systems

Benefits (continued)

- Operators can automate cylinder handling activities
- Provides fundamental component for all unattended monitoring systems currently being investigated for IAEA use:
  - Accountancy scale monitoring
  - Feed/withdrawal station monitoring
  - Flow monitoring (coupling on-line enrichment monitors with cylinders connected to process)

# Access-Controlled, Global "Registry"

Concept

- Provide listing of all cylinders present in each State
- Collects cylinder-related information from existing sources:
  - Cylinders containing $UF_6$ at IAEA safeguarded facilities
  - Shipments of $UF_6$ between IAEA safeguarded facilities
- Collect additional information:
  - Fabrication of new cylinders
  - Cylinder destruction
  - Shipments of empty cylinders
  - Cylinder inventories in NWS

# Access-Controlled, Global "Registry"

## Benefits

- To IAEA
  - Easily generate a complete listing of all cylinders within each safeguarded country
    - Support acquisition path analyses, annual inspection plans and State evaluations
  - Strengthens ability to reconcile transfers between countries
    - Automated transit matching
    - More timely than current reporting requirements
  - Provides a technical basis for recognizing unregistered (potentially undeclared) cylinders

- To cylinder owners
  - Easily generate list of location of all their cylinders

# Phased Implementation

- Initially focuses on cylinders in active circulation
  - 30B and 48Y cylinders
  - Notionally implemented over a 3-5 year period during cylinder recertification
- Long-term, incorporate into cylinder fabrication standards and regulations

# Industry Feedback

- Companies seem interested in an industry-wide UID for cylinders
  - Must not present safety hazard (e.g., fall off in steam autoclave)
  - Companies are currently using barcodes, stencils, and markers to label cylinders
  - Resistance to changing from current formats
  - Several companies have (or have investigated) automated ID reader systems (for company applied labels)
  - Some national authorities and companies have registries of cylinders (e.g., CNSC)
- Questions about the UID
  - How much would they cost and who would supply?
  - Who would apply? When and where?
  - What happens if it gets damaged or destroyed during recertification?
- Some concerns about a global “registry”
  - Who would have access? Could it help their competitors?
  - Many objections to “tracking”

# Conclusions

- Global UID
  - Would improve reporting to the IAEA
  - Would immediately benefit transit matching process
  - Some in industry are in general agreement, but still have concerns over some aspects
- A tamper-indicating, remotely readable UID
  - Would reduce time for IAEA to conduct on-site inspection activities
  - Is a fundamental component of unattended monitoring systems necessary to detect undeclared production scenarios
    - Must be globally unique
  - Must be designed to be useable by IAEA

# Next Steps

- Investigate available technology for UID and reader systems
- Define global “registry” (e.g., data, owner, access, architecture)
- Estimate costs and analyze lifecycle cost benefit
- Continue and expand industry outreach
- Continue to engage the IAEA

# Contact


- Jessica White-Horton
- (865) 574-1075
- whitejl@ornl.gov

LA-UR 12-27029

# Off Site Source Recovery Project

2013 Nuclear Materials Management & Safeguards System (NMMSS) Users Annual Training Meeting
May 21, 2013

John Zarling
Los Alamos National Laboratory

# Global Threat Reduction Initiative (GTRI)

- **Mission:** Reduce and protect vulnerable nuclear and radiological material located at civilian sites worldwide
- **Goals:**
  - Convert research reactors and isotope production facilities from HEU to LEU (permanent threat reduction)
  - Remove and dispose of excess nuclear and radiological materials (permanent threat reduction)
  - Protect high priority nuclear and radiological materials from theft and sabotage

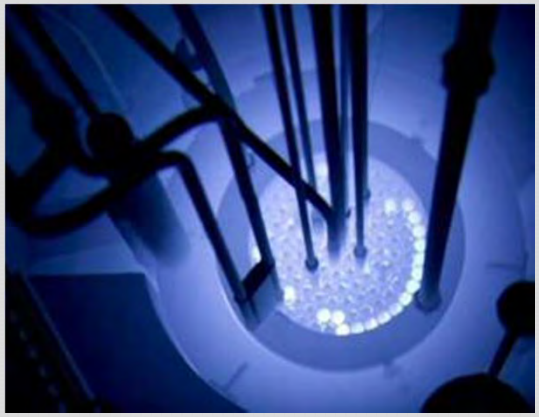

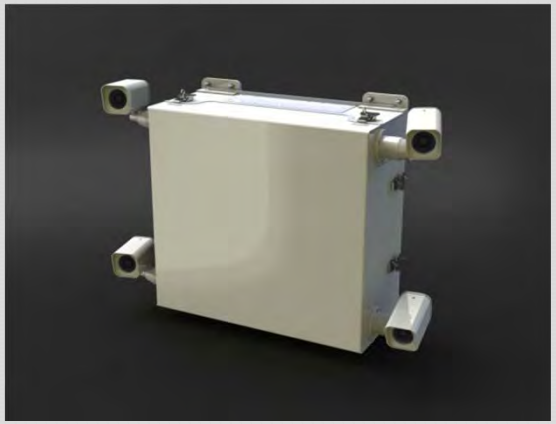

# Off-Site Source Recovery Project (OSRP)

- Every year, thousands of sources become disused and unwanted in the United States.
- While secure storage is a temporary measure, the longer sources remain disused or unwanted the chances increase that they will become unsecured or abandoned. Thus, permanent disposal is essential.
- To carry out its mission, GTRI/OSRP has the authority to acquire disused sealed sources in the interest of national security or public health and safety.
- OSRP primarily recovers Cs-137, Co-60, Sr-90, Am-241, Pu-238, Pu-239.
  - Every potential recovery is different and must be considered and prioritized. In coordination with the U.S. Nuclear Regulatory Commission (NRC), OSRP has developed a recovery prioritization criteria based on the threat reduction mission. Criteria include activity, isotope, location, and vulnerability.
  - Different Types of Recoveries
    - Transuranics, Low activity (less than 10 Ci) beta/gamma sources without commercial disposal, and High activity beta gamma devices
    - GTRI partners with the Conference of Radiation Control Program Directors, Inc. (CRCPD) on the Source Collection and Threat Reduction (SCATR) project which works with state regulators and licensees to round up sources with commercial disposal pathways

# GTRI/OSRP Recoveries

## Basic Recovery Steps

***Register via GTRI OSRP website [osrp.lanl.gov](osrp.lanl.gov)***

*Outreach to those with registered sources and comprehensive update of database*

### Review prioritization criteria

- GTRI, in coordination with NRC, has developed a recovery prioritization criteria based on the threat reduction mission
- Criteria includes activity, isotope, location, vulnerability

### Consider logistical options and impediments

- Availability of transport containers
- Disposal options
- Proximity to sites with scheduled recoveries (round-ups)

### Select Best Path Forward

- CRCPD's SCATR Project
- Small beta/gamma without commercial disposal
- Self-ship
- Transuranics
- Large beta/gamma devices

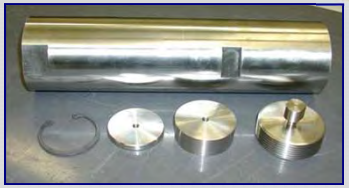

# OSRP Sources Recovered

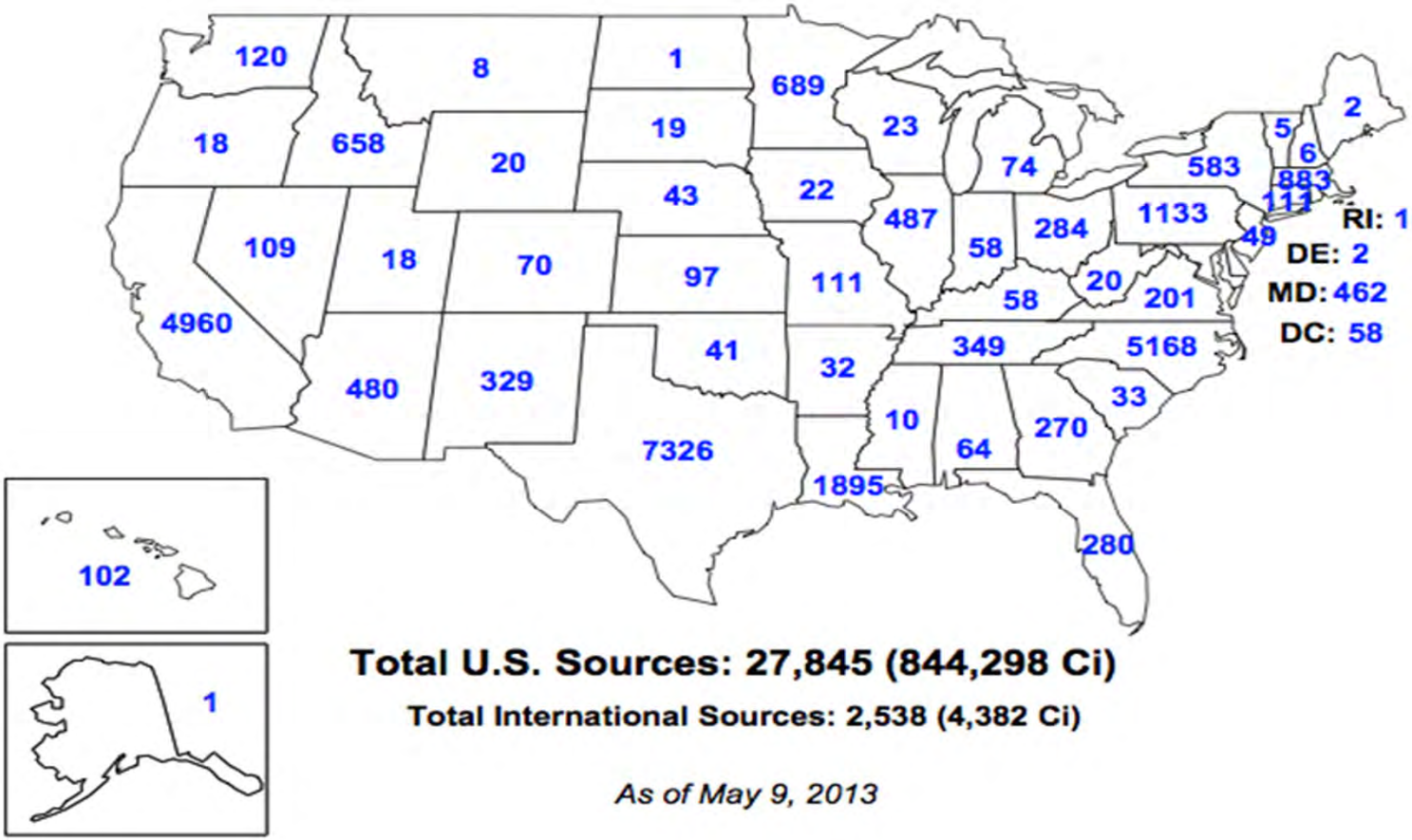


**Total U.S. Sources: 27,845 (844,298 Ci)**

**Total International Sources: 2,538 (4,382 Ci)**

*As of May 9, 2013*

# GTRI/OSRP International Recoveries

| Country | Number of Sources | Total Decayed Activity (Ci) |
|---|---|---|
| Argentina | 19 | 36 |
| Australia | 210 | 52 |
| Austria | 1 | 7 |
| Brazil | 1000 | 294 |
| Canada | 17 | 4 |
| Chile | 431 | 22 |
| Denmark | 11 | 44 |
| Ecuador | 37 | 8 |
| France | 44 | 125 |
| Germany | 48 | 14 |
| India | 101 | 289 |
| Israel | 7 | 31 |
| Italy | 11 | 1,202 |
| Japan | 1 | 2 |
| Peru | 486 | 60 |
| Singapore | 1 | 0 |
| South Africa | 69 | 23 |
| Sweden | 9 | 20 |
| Switzerland | 5 | 16 |
| Uruguay | 30 | 2,112 |
| Total | 2538 | 4,362 |

# Sources Registered as Disused and Unwanted on GTRI/OSRP Database

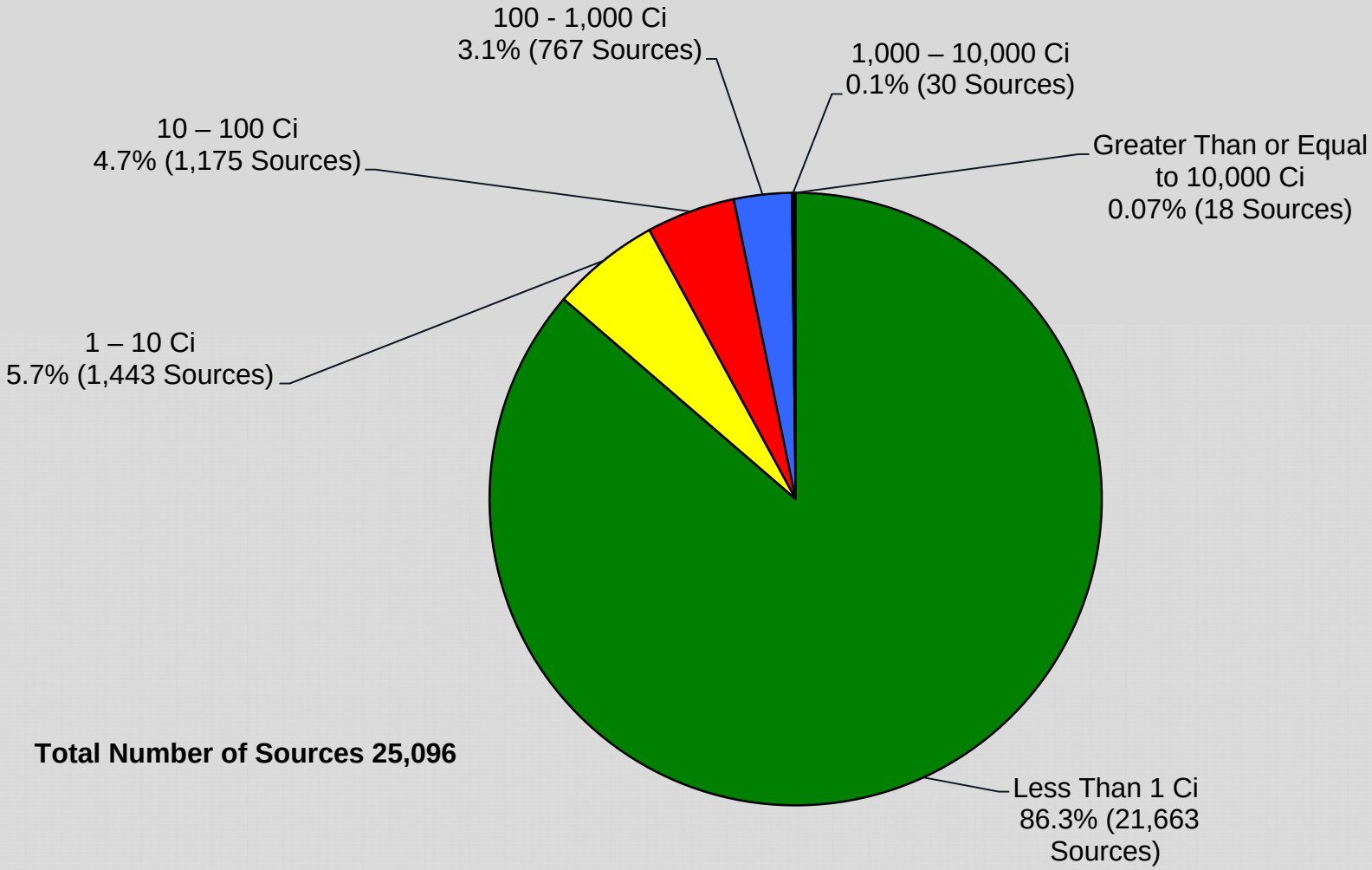


**Total Number of Sources 25,096**

# Decayed Activity of Disused and Unwanted on GTRI/OSRP Database

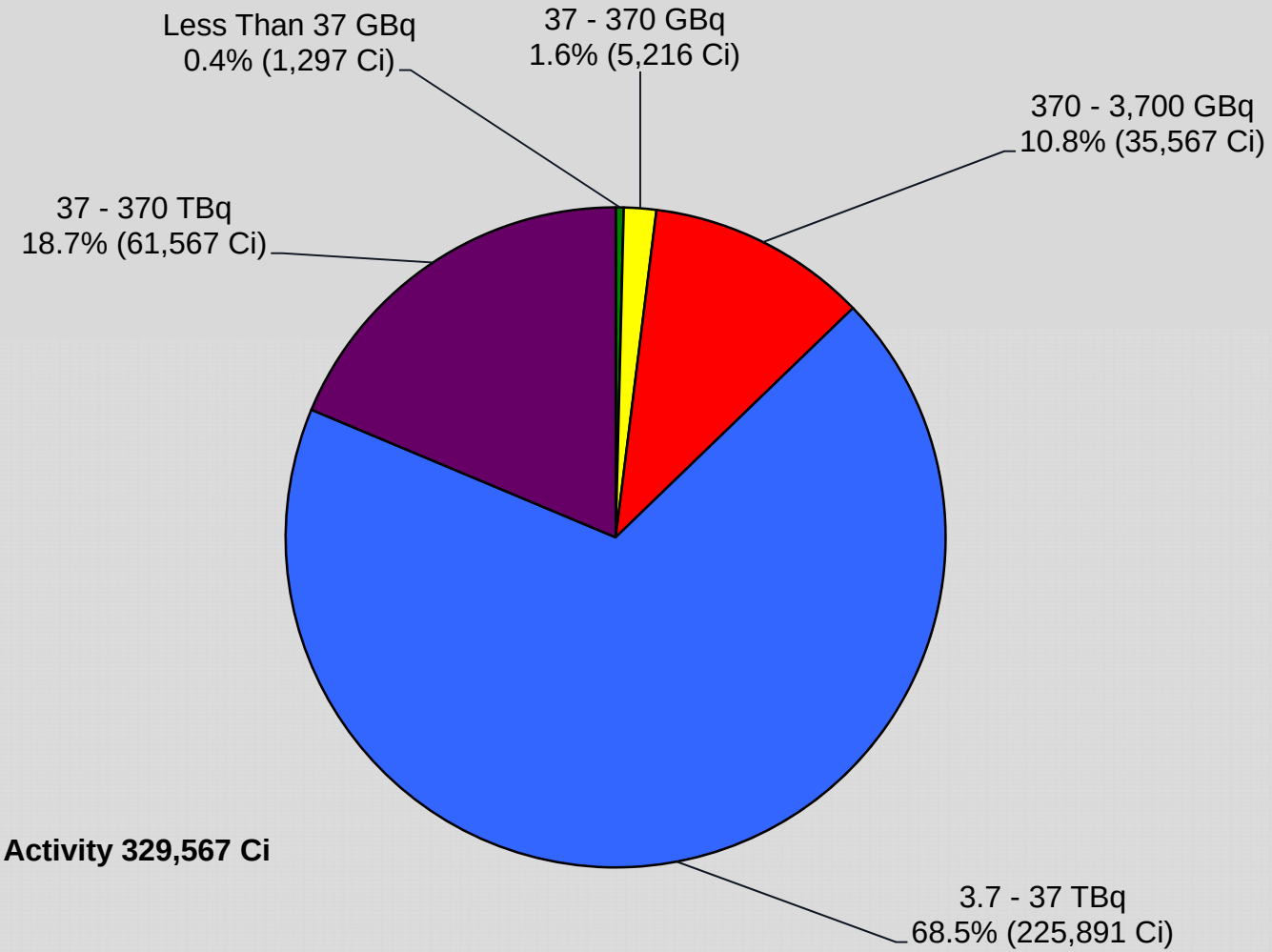


**Total Decayed Activity 329,567 Ci**

# National Security and Disposal

- Radiation Source Protection and Security (RSPS) Task Force
  - Established pursuant to section 651(d) of the Energy Policy Act of 2005 (Public Law 109-58)
    - "[T]o evaluate and provide recommendations to the President and Congress relating to the security of radiation sources in the United States from potential terrorist threats."
  - Includes membership from 14 Federal agencies and 2 State organizations
  - Reports to Congress and the President on progress in sealed source security every four years
    - Next Task Force Report due in 2014
- 2010 Radiation RSPS Task Force Report
  - "By far the most significant challenge identified is access to disposal for disused radioactive sources." (p.iii)
  - "Continued coordinated effort is needed to make sure that comprehensive, sustainable disposal pathways for all disused sealed sources are developed in the interest of national security." (p.iii)
  - "2010 Recommendation 4: The Task Force recommends that the U.S. Government, regional compacts, and States continue to evaluate disposal options for disused radioactive sources, including options for handling a potentially large number of disused cesium chloride sources that may be replaced once viable alternatives are available." (p.37)

# Key Sealed Source Disposal Challenges

- There are two primary challenges:
  1. Lack of commercial disposal options for high-activity beta/gamma sources (primarily cobalt-60, cesium-137 and strontium-90)
  2. Lack of near-term disposal capability for U.S.-licensed sealed sources containing foreign-origin transuranic source material

# LANL Special Form Capsule

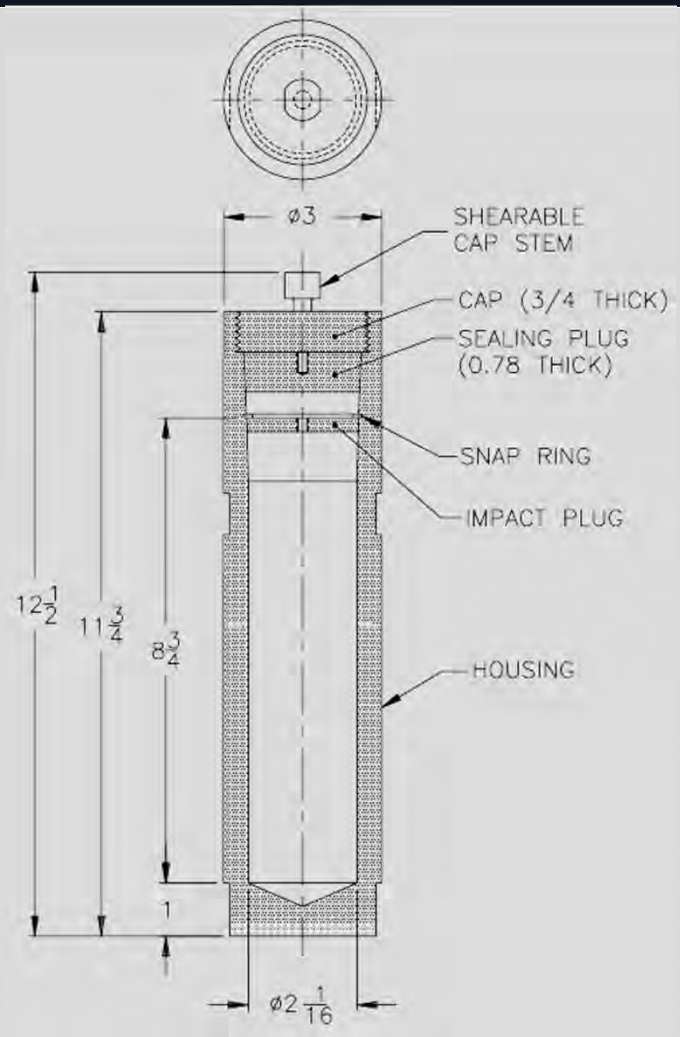


- Solves special form problem
- Useful for consolidation
- Useful for storage and disposition
- Solves some safety and security issues
- Allows Type A shipment

# Type A(F) Packaging: S300 POC (pipe overpack component)

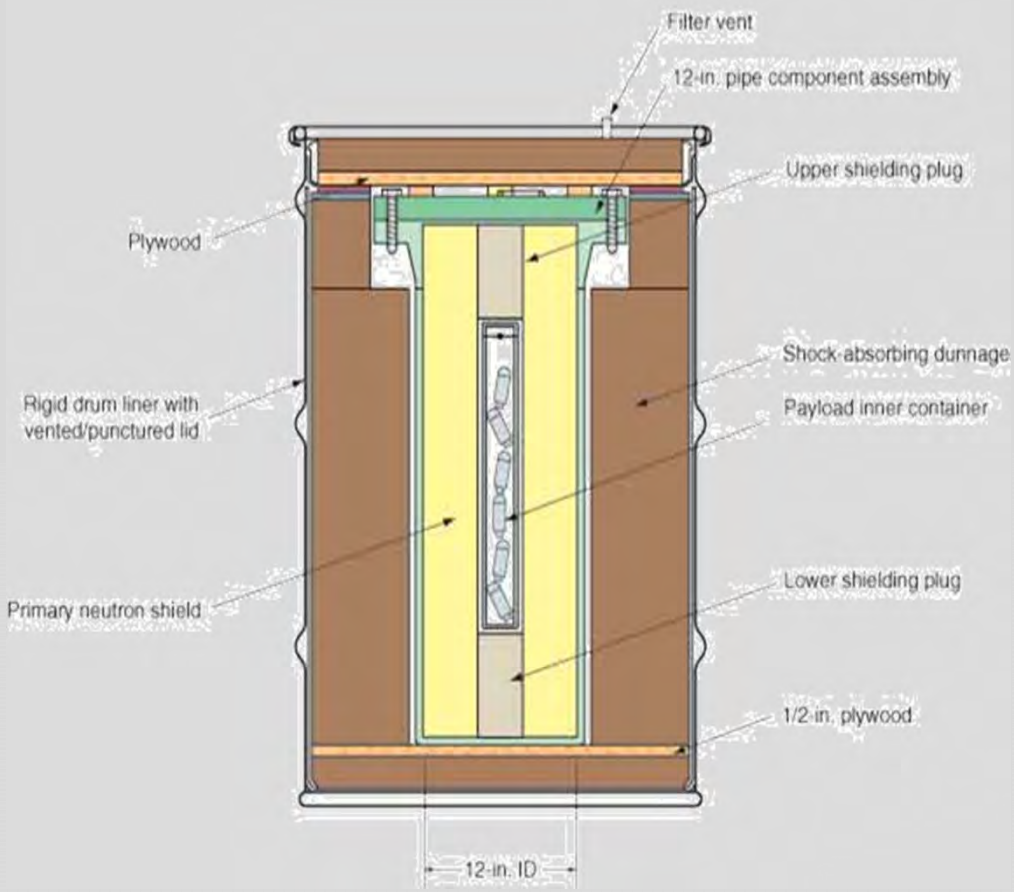

# Questions

John Zarling

OSRP Program Manager

Los Alamos National Laboratory

jcz@lanl.gov

# 435 B Design

- External construction based on previously certified container
- Design parameters:
  - IAEA Long Term Storage Shield (LTSS) – custom lodgment
  - Shielded devices with Cs-137 or Co-60 – internal container – max weight 1,590 Kg
  - LTSS Cs, Sr, Ir, Se, Ra, Am, Pu and small neutron sources
  - Approximately 480 TBq Co-60, 200 Watts
  - Leak-tight – Normal Condition of Transport (NCT) and Hypothetical Accident Conditions (HAC)
  - Transport by truck, rail, ship, air
  - External dimensions 209 cm Height (H) x 179 cm Outside Diameter (OD)
  - Internal Cavity 152 cm H x 110 cm Inside Diameter (ID)
  - Empty weight 2,225 Kg, total weight 4,535 Kg

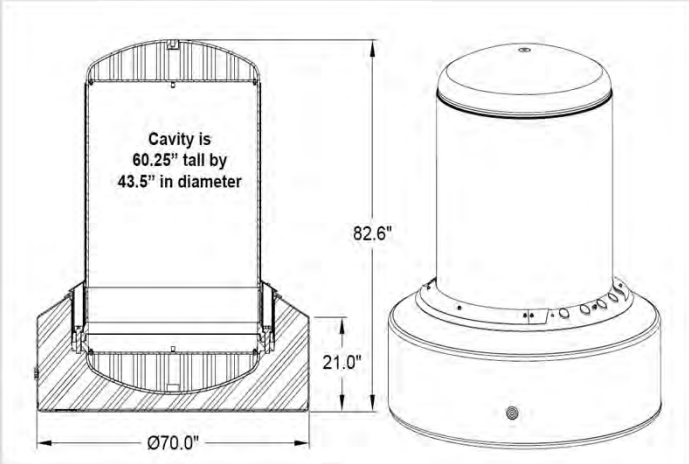


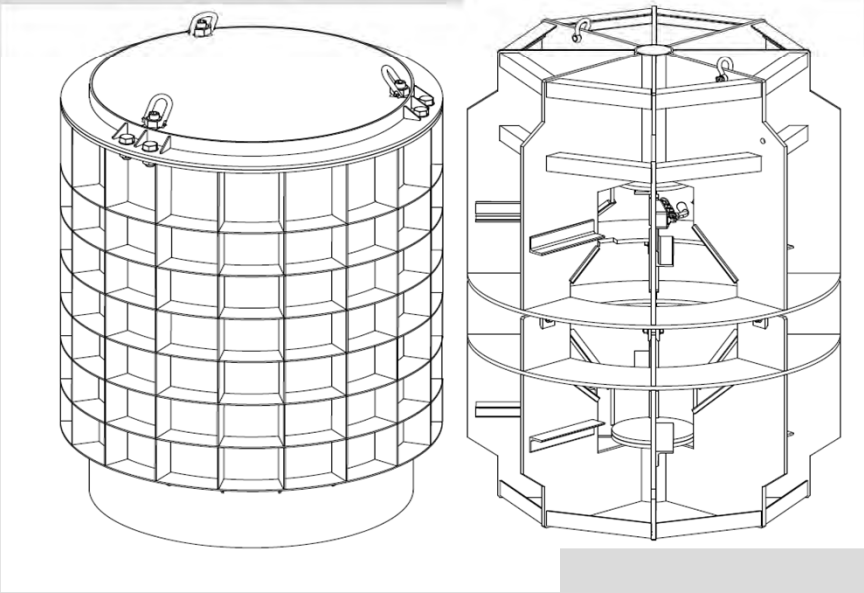

# 435 B Certification

- LTSS
  - No real issues anticipated
  - Extensive modeling
  - 15 different configurations of source loading
  - Review time will be extensive, operational controls more detailed

- Devices
  - NRC concerns – integrity of shielding, as built conditions, effects of long term weathering and unknown abuse, no documents or Quality Assurance
  - Approach – group devices by type – assemble available documentation, dissect devices and verify internal construction
  - Fix source in place for transport
  - Gammator type devices and Gamma Cell 40 irradiators

# 435 B

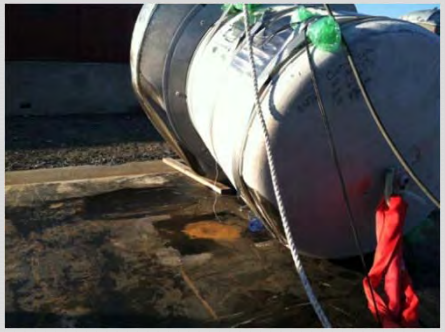

# 380 B Design

- Design parameters:
  - Payload weight 4,535 Kg
  - Co, Cs, Sr, Ir, Ra, Am, Pu, and Depleted Uranium
  - Approximately 275 TBq Co-60
  - Leak tight – Normal Condition of Transport (NCT) and Hypothetical Accident Conditions (HAC)
  - Transport by truck, rail, ship, air
  - External dimensions 330 cm H x 254 cm OD
  - Internal Cavity 162 cm H x 113 cm ID
  - Empty weight 35,835 Kg

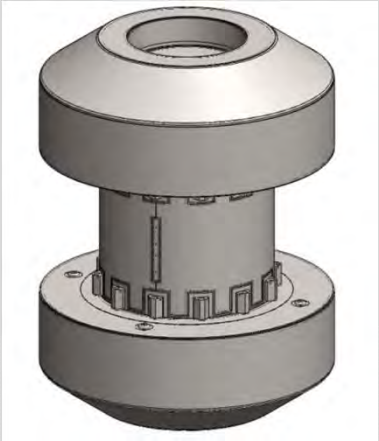

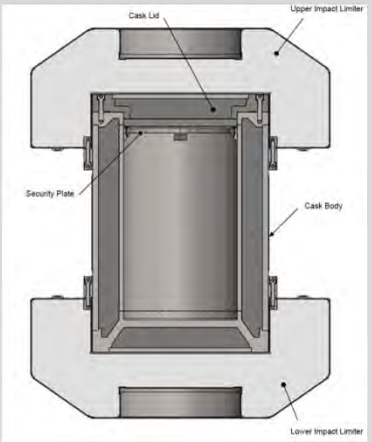


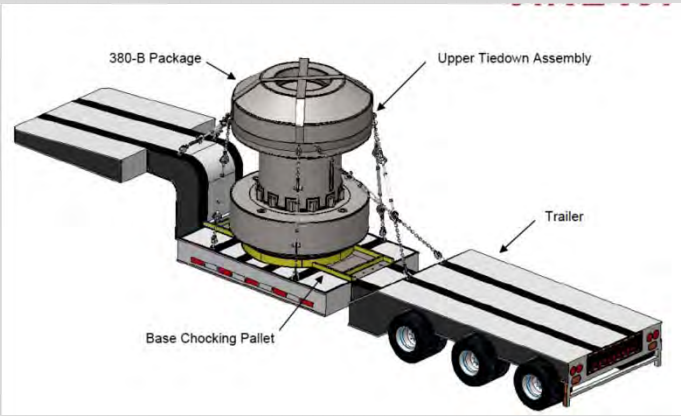

ACCURACY PERFORMANCE ACCOUNTABILITY

# Closeout of the Cf-252 Loan/Lease Program

Steven Sherman
Brad D. Patton
Oak Ridge National Laboratory

# Preview

- Introduction
- Program History
- Current State
- Desired End State
- Accomplishments
- Path Forward
- Summary

# Introduction

- Californium-252
  - First isolated in 1952 in Ivy-Mike explosion
  - 2.645 y half-life
  - $2.3 \times 10^6$ n/µg/s
- ORNL and RIAR are the only producers
- ORNL provides about 70% of the world's Cf-252

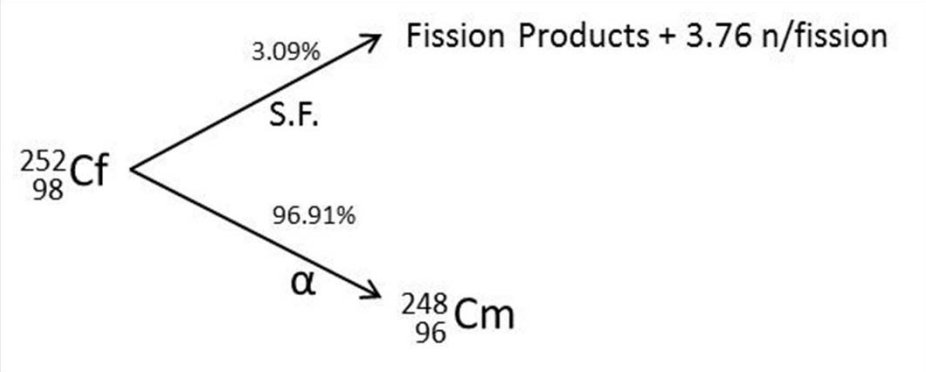

# Introduction

- Packaged in sealed containers
- Used as neutron sources
  - Radiography
  - Well logging
  - Nuclear reactor start-up
  - Instrument calibration
  - Cancer therapy
  - Prompt gamma neutron activation analysis (PGNAA)
  - Education

# Introduction

- Cf-252 Loan/Lease Program
  - Program to allow low-cost access by government agencies, qualified government contractors, and medical centers to Cf-252 sealed sources
    - Allowed users to borrow or lease Cf-252 sealed sources
    - Loans or leases spanned 1-5 years, and were renewable
    - Customers paid a low fee to cover some shipping and handling costs, but paid nothing for the Cf-252
  - Sources were to be returned at the end of the loan or lease

# Program History

- Initiated as a component of DOE's Cf-252 Market Evaluation Program in late 1960s
  - Two purposes
    - Stimulate growth of industry centered on Cf-252 (sales)
    - Stimulate demand for Cf-252 in the marketplace (loans)
- Program administered by Savannah River Site (SRS) from late 1960s through 1987
- ORNL took over the program in 1988

# Program History

- Program funded by AEC, ERDA, and then DOE
  - Sales performed through the DOE Isotope Program
  - Production and loans funded by DOE NNSA
- In 2009, regular DOE funding ceased
- Industry quickly rallied and organized a private consortium to restart Cf-252 production and sales
- No new funding was provided by anyone to continue the loan program

# Current Status of Loan Program

- Loan program has been in a suspended state since 2009, awaiting decision on its fate (Resume? Retool? Close?)
- Loaned or leased inventory
  - 59 customers on record (47 sites)
  - 57 customers hold 220 loaned/leased sources
  - 2 customers handed over their sources (1 each) to DOE's Off-Site Source Recovery Project (University of Maryland, 2009; Edinboro University, 2011)
- Stored inventory
  - 336 sealed sources stored at ORNL in a storage pool (many of these owned by the Cf-252 Loan/Lease Program)
- No new sources manufactured for loan or lease in many years
- No new loan or lease agreements have been executed
- ORNL hasn't been able to accept source returns from customers since regular program funding ended

# Desired End State

- In 2012, DOE selected to close out the loan program
- Desired End State
  - All sources recovered from non-DOE customers
  - All sources at DOE sites are recovered or reassigned to other active DOE programs
  - Stored sources valuable to other DOE programs are reassigned
  - Unneeded sources are disposed to Nevada National Security Site (NNSS) or Waste Isolation Pilot Plant (WIPP)
  - No sources remain in the program inventory at end of closeout
  - All loan or lease agreements closed

# Accomplishments

- New funding received in FY 2013 to begin closeout
  - Funding provided by NNSA through the Heavy Isotopes Lead Materials Management Organization (LMMO)
- NRC certificates of registration for six types of Cf-252 sealed sources were inactivated in August 2012
  - Implications
    - Avoided $95K in yearly renewal fees to NRC in FY2013
    - Prevents us from issuing sources to NRC-regulated customers
    - Does not affect the safety of sources already on loan

# Accomplishments

- Responsibility for two DOT special form certificates transferred to the Cf-252 Sales Program
  - Ability to ship Cf-252 sources outside of the U.S. has been maintained
- Customer contact information verified and notification letters sent to program customers
  - 56 letters sent, and awaiting confirmation of contact information for 3 customers

# Accomplishments

- Set up an automated customer survey web site to collect information from program customers
  - SurveyMonkey.com
  - So far, 39 customers (2/3 response rate) have filled in the survey
  - Received additional information by email and follow-up phone calls
- Digitizing customer historical records and organizing them into an Access database
  - Loan agreements, shipping records, etc.
- We have begun planning our next steps

# Path Forward

- Non-DOE sites
  - We will seek 100% retrieval
  - Source retrievals will be arranged through the National Isotope Development Center – Isotope Business Office at ORNL
  - Retrieved sources will be placed in the ORNL Cf-252 storage pool
  - Customer is expected to pay shipping costs for returns
    - Will work with customer individually to arrange for shipping
  - One return shipment/site for nearly all locations
  - Prioritized return schedule will be developed
  - ORNL has Type A casks that may be used for retrievals

# Path Forward

- DOE sites
  - We will seek 100% accountability
  - Sites will be given several options
    - Return unwanted sources to ORNL at their own cost
    - Directly dispose of unwanted sources
    - Keep wanted sources
  - Sources not returned to us must be transferred to another DOE program
  - Source transfers would be done on paper, so may be done relatively quickly
  - Physical source returns will be handled in priority order along with returns from non-DOE sites

# Path Forward

- Stored Sources
  - Includes sources in the storage pool now and sources that will come back to the storage pool upon retrieval
  - Other DOE programs will be given the opportunity to acquire sources from the pool at their own expense
  - Unwanted sources will be disposed
    - NNSS for low-level waste (LLW)
    - WIPP for trans-uranic (TRU) waste

# Path Forward

- Time Frame
  - Assumptions
    - Only 1 shipment needed from each non-DOE site
    - 35 non-DOE sites must return sources
    - No shipments needed from DOE sites
      - Note: 40% of all loaned/leased sources are at DOE sites
    - ORNL can process 8-10 source returns/year
  - Closeout is possible in four years
- New Cf-252 sealed sources may be purchased from commercial suppliers

# Path Forward

- Future closeout costs will include
  - Project management
  - Costs to handle returned sources
  - Costs to remove sources from the storage pool and package them for disposal
  - Disposal costs
  - Contingency costs
- Costs associated with transfer of sources to other DOE programs are minimal and will be borne by the program office

# Path Forward

- Tasks remaining for this fiscal year
  - Generate cost estimate and draft recall schedule for non-DOE sites
  - Ask each DOE customer about their intentions in regard to their loaned/leased sources
    - If possible, begin programmatic transfers this fiscal year for loaned/leased sources
  - Determine fair policy for transfer of desirable sources from the ORNL storage pool to other DOE programs
  - Determine funding needs for FY14, assuming we begin source retrievals in that year

# Summary

- DOE initiated closeout of the Cf-252 Loan/Lease Program this fiscal year
  - Cancelled or transferred licensing paperwork
  - Informed customers
  - Surveyed our customers to help us plan closeout
- Planning is underway to carry out source retrieval and disposal of unwanted sources
- Investigating transfer of sources to other DOE programs

ACCURACY PERFORMANCE ACCOUNTABILITY

# Facility Reporting Analysis and Performance

Gary L. Hirsch
Project Lead

- NMMSS is currently accepting data
  - Electronically
    - 80 Column
    - XML 1
    - XML 2
  - Paper / PDF

- Reporting Statistics for 2012
  - 179 facilities reporting in XML 2 (56%)
  - 5 facilities reporting in XML 1 (2%)
  - 22 facilities reporting in 80 col (7%)
  - 114 facilities reporting hardcopy input (35%)

# ~ 65 % of reporting facilities are reporting electronically

- This accounts for 97% of the transaction data

# Reporting Performance

- DOE September 2012 Reconciliations
  - Closed 11/26/2012, 10 day ahead of average
  - 49 facilities required to be reconciled
  - 40 facilities reported by 10/15/2012
  - 31 facilities either submitted reconciled or reconciled within 2 days of receipt

# Reporting Performance

- NRC 2012 Reconciliations
  - NMMSS reconciled 267 facilities during 2012, averaging 13 days from receipt to closure
  - There were 33 facilities that were closed on the same day as receipt

# Reporting Performance

- Transaction Processing
  - Received and processed 18,631 records
    - Totaling 432,233 lines of data
  - Overall error rate of ~ 1%

# Transactions

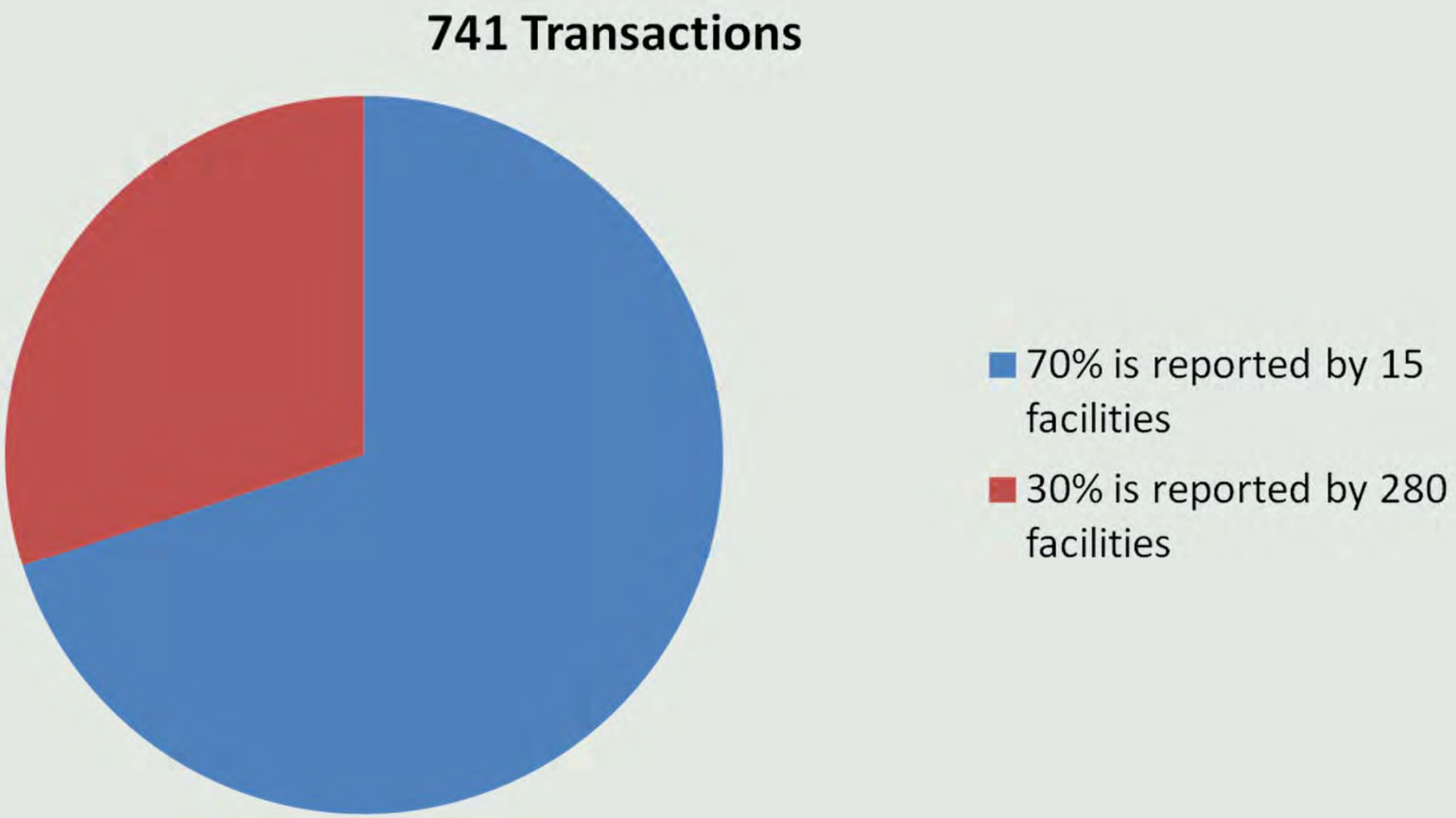

# Transactions

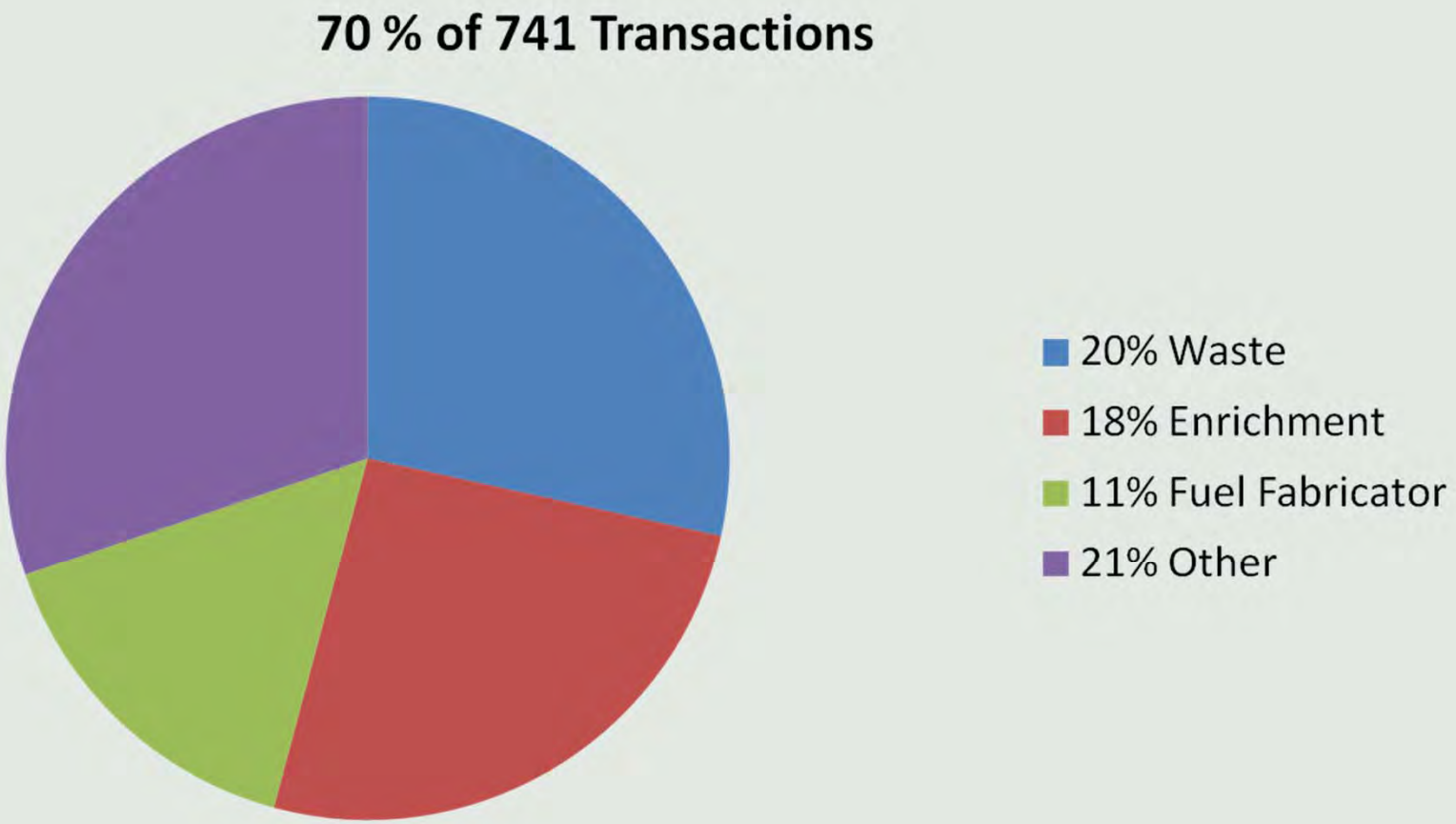

# Transactions

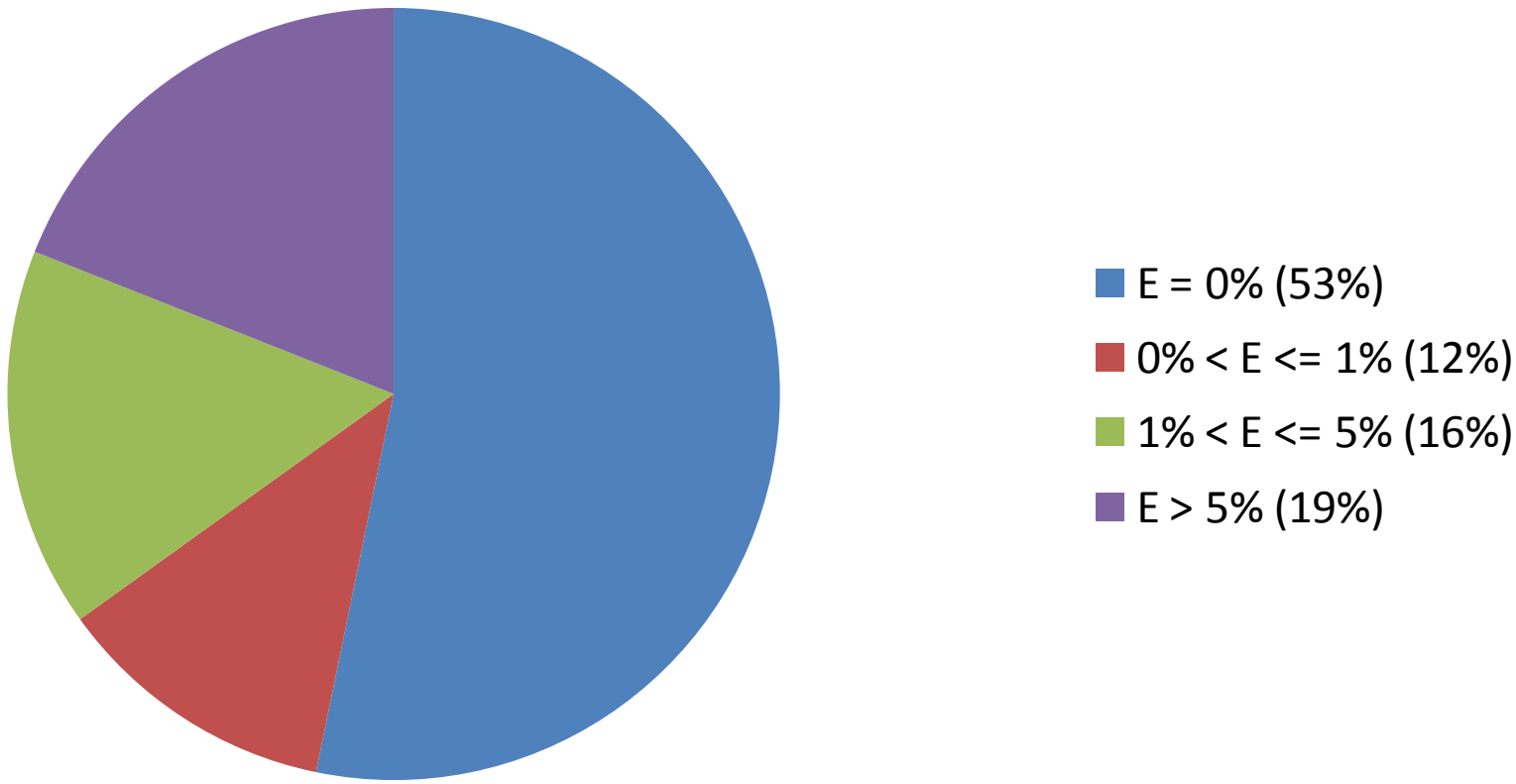

# Transactions

- Of the 15 largest submitters
  - All report electronically to NMMSS
    - All report in the XML2 format
    - 6 have an error rate of < 1%
    - 7 have an error rate 1 < % < 5
    - 2 have an error rate >= 5%

# Inventory / Material Balance

- Inventory Processing
  - Received and processed 1,034,305 lines of data
- Material Balance Processing
  - Received and processed 5,940 lines of data
    - NMMSS currently does not track error rates on this processing activity

# Performance Summary

- Overall error rate of 1% for transactions
  - This is 4,479 records in error
    - Requires analyst involvement
      - Correcting
      - Reprocessing
    - Facility involvement
      - Correcting
      - Resubmission

# Performance Summary

- Electronic Submission
  - 56% of facilities reporting in XML2 format
    - Requires no conversion
  - 9% of facilities reporting in other electronic formats
    - XML1 and 80 Column  reporting requires conversion
- Paper Submission
  - 35% of facilities reporting in hardcopy format
    - Requires manual input