Generic Environmental Impact Statement for License Renewal of Nuclear Plants: Main Report (NUREG-1437, Volume 1)

On this page:

- Publication Information
- Table of Contents
- Abstract

Publication Information

Manuscript Completed: April 1996
Date Published: May 1996

Division of Regulatory Applications
Office of Nuclear Regulatory Research
U.S. Nuclear Regulatory Commission
Washington, DC 20555-0001

Availability Notice

Table of Contents

- Abstract
- Figures
- Acronyms and Abbreviations
- Executive Summary
  - Impacts of Refurbishment
  - Impacts of Operation
  - Accidents
  - Uranium Fuel Cycle and Management of Waste
  - Decommissioning

- 1. Introduction
  - 1.1 Purpose of the GEIS
  - 1.2 Renewal of a Plant Operating License--the Proposed Federal Action
  - 1.3 Purpose and Need for the Action
  - 1.4 Alternatives to the Proposed Action
  - 1.5 Analytical Approach Used in the GEIS
  - 1.6 Scope of the GEIS
  - 1.7 Implementation of the Rule
    - 1.7.1 General Requirements
    - 1.7.2 Applicant's Environmental Report

    - 1.7.3 The NRC's Supplemental Environmental Impact Statement
    - 1.7.4 Public Scoping and Public Comments on the SEIS
    - 1.7.5 Commission's Analysis and Preliminary Recommendation
    - 1.7.6 Final Supplemental Environmental Impact Statement
  - 1.8 References
- 2. Description of Nuclear Power Plants and Sites, Plant Interaction with the Environment, and Environmental Impact Initiators Associated with License Renewal
  - 2.1 Introduction
  - 2.2 Plant and Site Description and Plant Operation
    - 2.2.1 External Appearance and Setting
    - 2.2.2 Reactor Systems
    - 2.2.3 Cooling and Auxiliary Water Systems
    - 2.2.4 Radioactive Waste Treatment Systems
    - 2.2.5 Nonradioactive Waste Systems
    - 2.2.6 Nuclear Power Plant Operation and Maintenance
    - 2.2.7 Power-Transmission Systems
  - 2.3 Plant Interaction with the Environment
    - 2.3.1 Land Use
    - 2.3.2 Water Use
    - 2.3.3 Water Quality
    - 2.3.4 Air Quality
    - 2.3.5 Aquatic Resources
    - 2.3.6 Terrestrial Resources
    - 2.3.7 Radiological Impacts
    - 2.3.8 Socioeconomic Factors
  - 2.4 License Renewal--The Proposed Federal Action
  - 2.5 Baseline Environmental Impact Initiators Associated with Continued Operation of Nuclear Power Plants
    - 2.5.1 Definition of Environmental Impact Initiators
    - 2.5.2 Baseline Environmental Impact Initiator Estimates
  - 2.6 Environmental Impact Initiators Associated with License Renewal and Continued Operation
    - 2.6.1 Scope and Objectives of Section 2.6
    - 2.6.2 Bases, Assumptions, and Approach
    - 2.6.3 Typical License Renewal Scenario
    - 2.6.4 Conservative License Renewal Scenario
    - 2.6.5 Impact Initiator Estimate Uncertainties
  - 2.7 Summary
  - 2.8 Endnotes
  - 2.9 References
- 3. Environmental Impacts from Nuclear Power Plant Refurbishment
  - 3.1 Introduction
  - 3.2 On-Site Land Use
  - 3.3 Air Quality
  - 3.4 Surface Water and Groundwater Quality
    - 3.4.1 Surface Water

    - 3.4.2 Groundwater

  - 3.5 Aquatic Ecology
  - 3.6 Terrestrial Ecology
  - 3.7 Socioeconomic Impacts
    - 3.7.1 Introduction
    - 3.7.2 Housing
    - 3.7.3 Taxes
    - 3.7.4 Public Services
    - 3.7.5 Off-Site Land Use
    - 3.7.6 Economic Structure
    - 3.7.7 Historic and Archaeological Resources
    - 3.7.8 Aesthetic Resources

  - 3.8 Radiological Impacts
    - 3.8.1 Public Exposures
    - 3.8.2 Occupational Dose

  - 3.9 Threatened and Endangered Species
  - 3.10 Summary of Impacts of Refurbishment
  - 3.11 Endnotes
  - 3.12 References

- 4. Environmental Impacts of Operation
  - 4.1 Introduction
  - 4.2 Once-Through Cooling Systems
    - 4.2.1 Surface Water Quality, Hydrology, and Use
    - 4.2.2 Aquatic Ecology

  - 4.3 Cooling Towers
    - 4.3.1 Introduction
    - 4.3.2 Surface Water Quality and Use
    - 4.3.3 Aquatic Ecology
    - 4.3.4 Agricultural Crops and Ornamental Vegetation
    - 4.3.5 Terrestrial Ecology
    - 4.3.6 Human Health
    - 4.3.7 Noise Impacts

  - 4.4 Cooling Ponds
    - 4.4.1 Introduction
    - 4.4.2 Surface Water Use and Quality
    - 4.4.3 Aquatic Ecology
    - 4.4.4 Terrestrial Ecology

  - 4.5 Transmission Lines
    - 4.5.1 Introduction
    - 4.5.2 Air Quality
    - 4.5.3 Land Use
    - 4.5.4 Human Health
    - 4.5.5 Surface Water Quality and Aquatic Ecology
    - 4.5.6 Terrestrial Ecology
    - 4.5.7 Floodplains and Wetlands

- 4.5.8 Aesthetic Resources

- 4.6 Radiological Impacts of Normal Operation
  - 4.6.1 Public Exposure
  - 4.6.2 Public Radiation Doses
  - 4.6.3 Occupational Radiation Dose

- 4.7 Socioeconomic Impacts
  - 4.7.1 Housing
  - 4.7.2 Taxes
  - 4.7.3 Public Services
  - 4.7.4 Off-Site Land Use
  - 4.7.5 Economic Structure
  - 4.7.6 Aesthetic Resources
  - 4.7.7 Historic and Archaeological Resources

- 4.8 Groundwater Use and Quality
  - 4.8.1 Groundwater Use
  - 4.8.2 Groundwater Quality
  - 4.8.3 Groundwater Quality Impacts of Cooling Ponds

- 4.9 Summary of Impacts of Operation
- 4.10 Endnotes
- 4.11 References

- 5. Environmental Impacts of Postulated Accidents
  - 5.1 Introduction
  - 5.2 Plant Accidents
    - 5.2.1 General Characteristics of Accidents
    - 5.2.2 Accident Experience and Observed Impacts
    - 5.2.3 Mitigation of Accident Consequences

  - 5.3 Accident Risk and Impact Assessment for License Renewal Period
    - 5.3.1 Regulatory Interface Between License Renewal and Accident Impacts
    - 5.3.2 Design-Basis Accidents
    - 5.3.3 Probabilistic Assessment of Severe Accidents
    - 5.3.4 Uncertainties

  - 5.4 Severe Accident Mitigation Design Alternatives (SAMDAs)
    - 5.4.1 Commission Experience Regarding Severe Accident Mitigation

  - 5.5 Summary and Conclusions
    - 5.5.1 Impacts from Design-Basis Accidents
    - 5.5.2 Impacts from Severe Accidents

  - 5.6 Endnotes

- 6. The Uranium Fuel Cycle and Solid Waste Management
  - 6.1 Introduction
  - 6.2 Impacts of the Uranium Fuel Cycle
    - 6.2.1 Background of Tables S-3 and S-4
    - 6.2.2 Uranium Fuel Cycle Environmental Impact
    - 6.2.3 Sensitivity to Recent Changes in the Fuel Cycle

- 6.2.4 Conclusions

- 6.3 Transportation
  - 6.3.1 Introduction
  - 6.3.2 Table S-4--Environmental Impact of Transportation of Fuel and Waste to and from One Light-Water-Cooled Nuclear Power Reactor
  - 6.3.3 Effects of License Renewal
  - 6.3.4 Conclusion

- 6.4 Generation and Storage of Radioactive Waste During the Term of the Renewed License
  - 6.4.1 Introduction
  - 6.4.2 Low-level Waste
  - 6.4.3 LLW Baseline
  - 6.4.4 Effects of License Renewal on LLW
  - 6.4.5 Mixed Waste
  - 6.4.6 Spent Fuel

- 6.5 Nonradiological Wastes
  - 6.5.1 Baseline
  - 6.5.2 Effects of License Renewal
  - 6.5.3 Conclusion

- 6.6 Summary
- 6.7 Endnotes
- 6.8 References

- 7. Decommissioning
  - 7.1 Introduction
  - 7.2 The Decommissioning Process
    - 7.2.1 Nuclear Power Plants
    - 7.2.2 Decommissioning Methods
    - 7.2.3 Decommissioning Experience
    - 7.2.4 Inventory and Disposition of Radioactive Materials

  - 7.3 Decommissioning Impacts and Changes Resulting from Life Extension
    - 7.3.1 Radiation Dose
    - 7.3.2 Waste Management Impacts
    - 7.3.3 Air Quality Impacts
    - 7.3.4 Water Quality Impacts
    - 7.3.5 Ecological Impacts
    - 7.3.6 Economic Impacts
    - 7.3.7 Socioeconomic Impacts

  - 7.4 Conclusions
  - 7.5 References

- 8. Alternatives to License Renewal
  - 8.1 Introduction
  - 8.2 Environmental Impacts of the No-Action Alternative
  - 8.3 Environmental Impacts of Alternative Energy Sources
    - 8.3.1 Wind
    - 8.3.2 Photovoltaic Cells

- 8.3.3 Solar Thermal Power
- 8.3.4 Hydropower
- 8.3.5 Geothermal
- 8.3.6 Wood Waste
- 8.3.7 Municipal Solid Waste
- 8.3.8 Energy Crops
- 8.3.9 Coal
- 8.3.10 Natural Gas
- 8.3.11 Oil
- 8.3.12 Advanced Light-Water Reactor
- 8.3.13 Delayed Retirement of Existing Non-Nuclear Plants
- 8.3.14 Conservation
- 8.3.15 Imported Electrical Power

- 8.4 Termination of Nuclear Power Plant Operations And Decommissioning
  - 8.4.1 Land Use
  - 8.4.2 Air Quality
  - 8.4.3 Water Resources
  - 8.4.4 Ecology
  - 8.4.5 Radiological Impacts
  - 8.4.6 Waste Management
  - 8.4.7 Socioeconomics
  - 8.4.8 Aesthetics Resources

- 8.5 References

- 9. Conclusions
- 10. List of Preparers

Abstract

The Nuclear Regulatory Commission (NRC) anticipates that it will receive applications for renewal of the operating licenses of a significant portion of existing nuclear power plants. This Generic Environmental Impact Statement (GEIS) examines the possible environmental impacts that could occur as a result of renewing licenses of individual nuclear power plants under 10 CFR Part 54. The GEIS, to the extent possible, establishes the bounds and significance of these potential impacts. The analyses in the GEIS encompass all operating light-water power reactors. For each type of environmental impact the GEIS attempts to establish generic findings covering as many plants as possible. While plant and site-specific information is used in developing the generic findings, the NRC does not intend for the GEIS to be a compilation of individual plant environmental impact statements.

This GEIS has three principal objectives: (1) to provide an understanding of the types and severity of environmental impacts that may occur as a result of license renewal of nuclear power plants under 10 CFR Part 54, (2) to identify and assess those impacts that are expected to be generic to license renewal, and (3) to support a rulemaking (10 CFR Part 51) to define the number and scope of issues that need to be addressed by the applicants in plant-by-plant license renewal proceedings. To accomplish these objectives, the GEIS makes maximum use of environmental and safety documentation from original licensing proceedings and information from state and federal regulatory agencies, the nuclear utility industry, the open literature, and professional contacts.

Figures

Figure 2.1 Pressurized-water-reactor power generation system

Figure 2.2 Boiling-water-reactor generating system

Figure 2.3 License renewal schedule and outage periods considered for environmental impact initiator definition

Figure 3.1 The seven case study nuclear plants

Figure 4.1 Examples of typical transmission line towers

Figure 5.1 Potential exposure pathways to individuals

Figure 5.2 Log plot of early fatalities (average deaths per reactor-year) for final environmental statement boiling-water reactor plants, fitted regression line (solid curve), and 95 percent normal-theory upper prediction confidence bounds (dotted curve)

Figure 5.3 Log plot of early fatalities (average deaths per reactor-year) for final environmental statement pressurized-water reactor plants, fitted regression line (solid curve), and 95 percent normal-theory upper prediction confidence bounds (dotted curve)

Figure 5.4 Log plot of normalized latent fatalities (average deaths per 1000 MW reactor-year) for final environmental statement boiling-water reactor plants, fitted regression line (solid curve), and 95 percent distribution-free upper prediction confidence bounds (dotted curve)

Figure 5.5 Log plot of normalized latent fatalities (average deaths per 1000 MW reactor-year) for final environmental statement pressurized-water reactor plants, fitted regression line (solid curve), and 95 percent distribution-free upper prediction confidence bounds (dotted curve)

Figure 5.6 Log plot of normalized total dose (person-rem per 1000 MW reactor-year) for final environmental statement boiling-water reactor plants, fitted regression line (solid curve), and 95 percent distribution-free upper prediction confidence bounds (dotted curve)

Figure 5.7 Log plot of normalized total dose (person-rem per 1000 MW reactor-year) for final environmental statement pressurized-water reactor plants, fitted regression line (solid curve), and 95 percent distribution-free upper prediction confidence bounds (dotted curve)

Figure 5.8 Water body surface areas and volumes within 80 km (50 miles) of representative nuclear power plant sites (potentially affected water bodies)

Figure 5.9 Water body surface areas and volumes within 80 km (50 miles) of the reactor site and within six of the 22.50 compass sectors that exhibit the greatest percentage of time for which the wind blows toward that compass direction (likely affected water bodies)

Figure 5.10 Water body flow rate at representative nuclear power plant sites

Figure 5.11 Contaminant residence time (flushing rate) and surface area-volume ratios for water bodies within an 80-km (50-mile) radius of selected nuclear power plants

Figure 6. 1 Low-level radioactive waste compact status

Figure 7.1 Typical pressurized-water reactor generating station layout

Figure 7.2 Site layout on a typical boiling-water reactor power plant

Figure 7.3 Buildup of activation products in pressurized-water reactor internal components as a function of effective full-power years

Figure 7.4 Time dependence of radioactivity and dose rate in a boiling-water reactor core shroud after 40 years of operation

Figure 8.1 U.S. wind energy resources

Figure 8.2 Solar resource availability: annual average daily direct normal solar radiation

Figure 8.3 U.S. conventional hydroelectric generating capacity, developed and undeveloped

Figure 8.4 U.S. known and potential geothermal energy resources

Acronyms and Abbreviations

[**Prev** | **Next** | **Table of Contents**]

ADS	automatic depressurization system
AEA	Atomic Energy Act of 1954
AEC	U.S. Atomic Energy Commission
AEO	*Atomic Energy Outlook 1990*
AFUDC	allowance for funds used during construction
AGA	American Gas Association
AGR	advanced gas-cooled reactor
AIRFA	American Indian Religious Freedom Act
ALARA	as low as reasonably achievable
ALI	annual limits on intake
A/m	amps per meter
AML	acute myelogenous leukemia
ANO	Arkansas Nuclear One
ANOVA	analysis of variance
ANSI	American National Standards Institute
AP&L	Arkansas Power and Light
ASME	American Society of Mechanical Engineers
ATWS	anticipated transit without scram
BAU	business-as-usual
BEIR	Biological Effects of Ionizing Radiation
BIG/GT	biomass-gasifier/gas turbine
BRC	below regulatory concern
BSD	Burlington School District
B&W	Babcock and Wilcox
BWR	boiling-water reactor
° C	degrees centigrade (Celsius)
CAA	Clean Air Act
CAAA	Clean Air Act Amendments of 1990

CCC	California Coastal Commission
CDE	committed dose equivalent
CDF	core damage frequencies
CE	Combustion Engineering
CEDE	committed effective dose equivalent
CEQ	Council on Environmental Quality
CERCLA	Comprehensive Environmental Response, Compensation, and Liability Act
CFC	chlorofluorocarbon
CFR	Code of Federal Regulations
Ci	curie
CML	chronic myelogenous leukemia
CMSA	consolidated metropolitan statistical area
CNS	central nervous system
CO	carbon monoxide
ConEd	Consolidated Edison
CPI	containment performance improvement
CPW	continuous polymer wire
CRAC	Consequence (of) Reactor Accident Code
CRD	control rod drive
CWA	Clean Water Act of 1977
CZMA	Coastal Zone Management Act
DAC	derived air concentrations
DAW	dry active waste
DE	dose equivalent
DECON	a nuclear plant decommissioning method
DER	Florida Department of Environmental Regulation
DFA	direct fluorescent antibody
DMBA	dimethylbenzanthracene
DNR	Florida Department of Natural Resources
DO	dissolved oxygen
DOE	U.S. Department of Energy
DOI	Department of Interior
DRBC	Delaware River Basin Commission
DREF	dose rate effectiveness factor
DRI	Data Resources Incorporated
DSC	dry shielded canister
DSM	demand-side management
E	electric field
EA	environmental assessment
EAB	exclusion area boundary
EDE	effective dose equivalent
EEC	European Economic Community
EEDB	Energy Economic Data Base
EEG	electroencephalogram
EEI	Edison Electric Institute
E-field	electric-field

EI	exposure index
EIA	Energy Information Administration
EIS	environmental impact statement
EKG	electrocardiogram
ELF	extremely low frequency
EM	electromagnetic
EMF	electromagnetic field
ENTOMB	a nuclear plant decommissioning method
EO	Executive Order
EPA	U.S. Environmental Protection Agency
EPACT	Energy Policy Act of 1992
EPCRA	Emergency Planning and and Community Right-to-Know Act
EPRI	Electric Power Research Institute
EPZ	emergency planning zone
ESA	Endangered Species Act
ESEERCO	Empire State Electric Energy Research Corporation
FDA	U.S. Food and Drug Administration
FEMA	U.S. Federal Emergency Management Agency
FERC	Federal Energy Regulatory Commission
FES	final environmental statement
FFCA	Federal Facilities Compliance Agreement
FIFRA	Federal Insecticide, Fungicide, and Rodenticide Act
FIS	federal interim storage
FONSI	finding of low significant impact
FPC	Florida Power Commission
FP&L	Florida Power & Light
FR	Federal Register
FSAR	final safety analysis report
FWCA	Fish and Wildlife Coordination Act
FWS	U.S. Fish and Wildlife Service
GBD	gas bubble disease
GCHWR	gas-cooled heavy-water-moderated reactor
GCR	gas-cooled reactor
GE	General Electric Company
GEIS	generic environmental impact statement
$g/m^2/s$	gallons per square meter per second
GNP	gross national product
GNSI	General Nuclear Systems, Inc.
GPU	General Public Utilities Corporation
GRI	Gas Research Institute
GTCC	greater-than-class-C
GW	gigawatt
GWd	gigawatt-days
HC	hydrocarbons
HL&P	Houston Lighting and Power Company

HLW	high-level radioactive waste
HP	health physics
HPOF	high-pressure oil-filled
HRS	hazard ranking system
HSM	horizontal storage module
HSWA	Hazardous and Solid Waste Amendments of 1984
HWR	heavy-water reactor
ICRP	International Commission on Radiological Protection
IGSCC	intergranular stress-cracking corrosion
IMP	intramembranous protein particle
INIRC	International Non-Ionizing Radiation Protection Association
INPO	Institute of Nuclear Power Operations
IOR	ion exchange resin
IPA	integrated plant assessment
IPE	individual plant examination
IRPA	International Radiation Protection Association
ISFSI	independent spent-fuel storage installation
ISI	in-service inspection
ISTM	inspection, surveillance, testing, and maintenance
kV	kilovolt
kV/m	kilovolts per meter
kW	kilowatt
kWh	kilowatt-hour
LD	Legionnaires' disease
LDR	land disposal restrictions
LDSD	Lower Dauphin School District
LET	linear energy transfer
LLRWPAA	Low-Level Radioactive Waste Policy Amendments Act of 1985
LLW	low-level radioactive waste
LMFBR	liquid-metal first breeder reactor
LOCA	loss-of-coolant accident
LOS	level of service
LPGS	Liquid Pathway Generic Study
LPZ	low population zone
LWR	light-water reactor
m	meter
mA	milliamperes
MACCS	MELCOR Accident Consequence Code System
MANOVA	multivariate analyses of covariance
MAP	Methodologies Applications Program
MASD	Middletown Area School District
mCi	milliCurie
MCLG	maximum contaminant goal levels
MDNR	Maryland Department of Natural Resources

MFD	magnetic flux density
mG	milligauss
mM	millimole
MMPA	Marine Mammals Protection Act
MPC	maximum permissible concentration
MPRSA	Marine Protection, Research, and Sanctuaries Act
MPOB	maximum permissible organ burden
MRC	Marine Review Committee
mrem	millirem
MRS	monitored retrievable storage
m^3/s	cubic meters per second
MSA	metropolitan statistical area
MSW	municipal solid waste
mT	millitesla
MTIHM	metric tons of initial heavy metal
MTU	metric tons of uranium
mV/m	millivolts per meter
MW	megawatt
MWd	megawatt-days
MW(e)	megawatt (electrical)
MW(t)	megawatt (thermal)
MYL	middle year of license
MYR	middle year of relicense
m g/g	micrograms per gram
m m	micron
NAA	nonattainment area
NAAQS	National Ambient Air Quality Standards
NAS	National Academy of Sciences
NBS	National Bureau of Standards (now NIST)
NCA	National Coal Association
NCRP	National Council on Radiation Protection and Measurements
NEC	normalized expected cost
NEPA	National Environmental Policy Act of 1969
NERC	North American Electric Reliability Council
NESC	National Electric Safety Code
NESHAP	National Emission Standards for Hazardous Air Pollutants
NGS	nuclear generating station
NHPA	National Historic Preservation Act of 1966
NIEHS	National Institute of Environmental Health Sciences
NIOSH	National Institute for Occupational Safety and Health
NIST	National Institute of Standards and Technology
NLF	normalized latent facility
NMFS	National Marine Fisheries Service
NMR	nuclear magnetic resonance
NO_x	nitrogen oxide(s)
NPA	National Planning Association
NPDES	National Pollutant Discharge Elimination System

NPP	nuclear power plant
NRC	U.S. Nuclear Regulatory Commission
NSPS	new source performance standards
NSSS	nuclear steam supply system
NTD	normalized total dose
NUHOMS	Nutech Horizontal Modular System
NUMARC	Nuclear Utilities Management and Resources Council
NUREG	an NRC reports category
NUS	NUS Corporation
NWPA	Nuclear Waste Policy Act of 1982
NYSDEC	New York State Department of Environmental Conservation
ODC	ornithine decarboxylase
OHMS	hydroxy melatonin sulfate
OL	operating license
O&M	operation and maintenance
ONS	Oconee Nuclear Station
OPEC	Organization of Petroleum Exporting Countries
OR	odds ratio
ORNL	Oak Ridge National Laboratory
OSHA	Occupational Safety and Health Administration
OTA	Office of Technology Assessment
OTEC	ocean thermal energy conversion
PAME	primary amoebic meningoencephalitis
PASNY	Power Authority for the State of New York
PCB	polychlorinated biphenyl
PG&E	Pacific Gas and Electric
pH	hydrogen-ion concentration
PHWR	pressurized heavy-water reactor
PLEX	plant life extension
PM	particulate matter
PMR	proportionate mortality ratios
ppm	parts per million
PSD	prevention of significant deterioration
PRA	probabilistic risk assessment
PTH	parathyroid hormone
PURPA	Public Utility Regulatory Policies Act of 1978
PURTA	Public Utilities Realty Tax Assessment of 1970
PV	solar photovoltaic
PWR	pressurized-water reactor
QA	quality assurance
RBE	relative biological effectiveness
RCB	reactor containment building
RCRA	Resource Conservation and Recovery Act of 1976
RD&D	1. research, design, and development

	2. research, development, and demonstration
RERF	Radiation Effects Research Council
RET	renewable energy technology
RF	radio frequency
RHR	residual heat removal
RIMS	Regional Industrial Multiplier System
rms	root mean square
ROW	right(s) of way
RPV	reactor pressure vessel
RRY	reference reactor year
RSD	Russellville (Ark.) School District
RSS	Reactor Safety Study
RV	recreational vehicle
RY	reactor-year
SAFSTOR	a nuclear plant decommissioning method
SAMDA	severe accident mitigation design alternative
SAND	Data Resource Incorporated's detailed electricity sector model
SAND NUPLEX	SAND generating capacity projections
SAR	safety analysis report
SARA	Superfund Amendments and Reauthorization Act
SCE	Southern California Edison
SCM	Surface Compartment Model
SDG&E	San Diego Gas & Electric Company
SDWA	Safe Drinking Water Act
SEA	Science and Engineering Associates, Inc.
SER	safety evaluation report
SERI	Solar Energy Research Institute
SEV	state equalized value
SF	spent fuel
SHPO	state historic preservation office
SI	International System
SIR	standardized incidence ratio
SLB	shallow land burial
SMR	standardized mortality ratio
SMITTR	surveillance, on-line monitoring, inspections, testing, trending, and recordkeeping
SMSA	standard metropolitan statistical area
SO_2	sulfur dioxide
SOK	San Onofre kelp bed
SONGS	San Onofre Nuclear Generating Station
SRBC	Susquehanna River Basin Commission
SSC	systems, structures, and components
t	metric tons
TDE	total dose equivalent
TDS	total dissolved solids
TEDE	total effective dose equivalent
TMI	Three Mile Island (nuclear plant)

TRU	transuranic
TSCA	Toxic Substances Control Act
TVA	Tennessee Valley Authority
UCB	upper confidence bound
UFC	uranium fuel cycle
UHV	ultra-high voltage
UNSCEAR	United Nations Scientific Committee on the Effects of Atomic Radiation
USD	Unified School District
USGS	U.S. Geological Survey
USI	unresolved safety issue
VDT	video display terminal
VR	volume reduction
VRF	volume reduction factor
W	watt
WCGS	Wolf Creek Generating Station
WHO	World Health Organization
WNP-2	Washington Nuclear Project
WTE®	Whole Tree Energy®

Executive Summary

[**Prev** | **Next** | **Table of Contents**]

This Generic Environmental Impact Statement (GEIS) for license renewal of nuclear power plants was undertaken to

(1) assess the environmental impacts that could be associated with nuclear power plant license renewal and an additional 20 years of operation of individual plants and

(2) provide the technical basis for an amendment to the Nuclear Regulatory Commission's (NRC's) regulations, 10 CFR Part 51, "Environmental Protection Regulations for Domestic Licensing and Related Regulatory Functions," with regard to the renewal of nuclear power plant operating licenses. The rule amendment and this document were initiated to enhance the efficiency of the license renewal process by documenting in this GEIS and codifying in the Commission's regulations the environmental impacts that are well understood.

Under NRC's environmental protection regulations in 10 CFR Part 51, renewal of a nuclear power plant operating license is identified as a major federal action significantly affecting the quality of the human environment, and thus an environmental impact statement (EIS) is required for a plant license renewal review. The EIS requirements for a plant-specific license renewal review are specified in 10 CFR Part 51. Operating licenses may be renewed for up to 20 years beyond the 40-year term of the initial license. License renewal applicants perform evaluations and assessments of their facility to provide sufficient information for the NRC to determine whether continued operation of the facility during the renewal term will endanger public health and safety or the environment. The assessments also help to determine what activities and modifications are necessary at the time of license renewal and throughout the renewal term to ensure continued safe operation of the plant. Most utilities are expected to begin preparation for license renewal about 10 to 20 years before expiration of their original operating licenses. For the analysis in this GEIS, the staff anticipates that plant refurbishment undertaken specifically for license renewal would probably be completed during normal plant outage cycles, beginning 8 years before the original license expires, and during one longer outage, if a major refurbishment item is involved.

The Commission will act on an application for license renewal submitted by a licensee of an operating nuclear power plant. Although a licensee must have a renewed license to operate a plant beyond the term of the existing operating license, the possession of that license is just one of a number of conditions that must be met for the licensee to continue plant operation during the term of the renewed license. If the Commission grants a license renewal for a plant, state regulatory agencies and the owners of the plant would ultimately decide whether the plant will continue to operate based on factors such as need for power or other matters within the state's jurisdiction or the purview of the owners. Economic considerations will play a primary role in the decision made by state regulatory agencies and the owners of the plant. Thus, for license renewal reviews, the Commission has adopted the following definition of purpose and need:

The purpose and need for the proposed action (renewal of an operating license) is to provide an option that allows for power generation capability beyond the term of a current nuclear power plant operating license to meet future system generating needs, as such needs may be determined by State, utility, and, where authorized, Federal (other than NRC) decisionmakers.
In Chapter 8, the Commission considers the environmental consequences of the no-action alternative (i.e., denying a license renewal application) and the environmental consequences of the various alternatives for replacing lost generating capacity that would be available to a utility and other responsible energy planners. No conclusions are made in this document about the relative environmental consequences of license renewal or the construction and operation of alternative facilities for generating electric energy. The information in the GEIS is available for use by the NRC and the licensee in performing the site-specific analysis of alternatives. This information will be updated periodically, as appropriate.

The GEIS summarizes the findings of a systematic inquiry into the potential environmental consequences of renewing the licenses of and operating individual nuclear power plants for an additional 20 years. The inquiry identifies the attributes of the nuclear power plants, such as major features and plant systems, and the ways the plants can affect the environment. The inquiry also identifies the possible refurbishment activities and modifications to maintenance and operating procedures that might be undertaken given the requirements of the safety review as provided for in the Commission's regulations in 10 CFR Part 54, or given a utility's motivation to increase economic efficiency. Two scenarios were developed to identify possible initiators of environmental impacts from the possible set of refurbishment activities and continuation of plant operation during the renewal term. One scenario was developed as a typical but somewhat conservative scenario for license renewal, intended to be representative of the type of program that many licensees seeking license renewal might implement. The other scenario is highly conservative, encompassing considerably more activities, and is intended to characterize a reasonable upper bound of impact initiators that might result from license renewal.

The general analytical approach to each environmental issue is to (1) describe the activity that affects the environment, (2) identify the population or resource that is affected, (3) assess the nature and magnitude of the impact on the affected population or resource, (4) characterize the significance of the effect for both beneficial and adverse effects, (5) determine whether the results of the analysis apply to all plants, and (6) consider whether additional mitigation measures would be warranted for impacts that would have the same significance level for all plants.

A standard of significance was established for assessing environmental issues; and, because significance and severity of an impact can vary with the setting of a proposed action, both "context" and "intensity" as defined in the Council on Environmental Quality regulations (40 CFR 1508.27) were considered. With these standards as a basis, each impact was assigned to one of three significance levels:

Small: For the issue, environmental effects are not detectable or are so minor that they will neither destabilize nor noticeably alter any important attribute of the resource. For the purposes of assessing radiological impacts, the Commission has concluded that those impacts that do not exceed permissible levels in the Commission's regulations are considered small.

Moderate: For the issue, environmental effects are sufficient to alter noticeably but not to destabilize important attributes of the resource.

Large: For the issue, environmental effects are clearly noticeable and are sufficient to destabilize important attributes of the resource.

The discussion of each environmental issue in the GEIS includes an explanation of how the significance category was determined. For issues in which probability of occurrence is a key consideration (i.e., accident consequences), the probability of occurrence is factored into the determination of significance. In determining the significance levels, it is assumed that ongoing mitigation measures would continue and that mitigation measures employed during plant construction would be employed during refurbishment, as appropriate. The potential benefits of additional mitigation measures are not considered in determining significance levels.

In addition to determining the significance of environmental impacts associated with an issue for that issue, a determination was made whether the analysis in the GEIS could be applied to all plants and whether additional mitigation measures would be warranted. The categories to which an issue may be assigned follow.

Category 1: For the issue, the analysis reported in the GEIS has shown the following:

(1) the environmental impacts associated with the issue have been determined to apply either to all plants or, for some issues, to plants having a specific type of cooling system or other specified plant or site characteristics;
(2) a single significance level (i.e., small, moderate, or large) has been assigned to the impacts (except for collective off-site radiological impacts from the fuel cycle and from high-level-waste and spent-fuel disposal); and
(3) mitigation of adverse impacts associated with the issue has been considered in the analysis, and it has been determined that additional plant-specific mitigation measures are likely not to be sufficiently beneficial to warrant implementation.

Category 2: For the issue, the analysis reported in the GEIS has shown that one or more of the criteria of Category 1 cannot be met, and therefore, additional plant-specific review is required.

This final GEIS assesses 92 environmental issues. Sixty-eight of these issues are found to be Category 1 and are identified in 10 CFR Part 51 as not requiring additional plant-specific analysis. Guidance on the analyses required for each of the other 24 issues is provided in 10 CFR Part 51. A summary of the findings for the 92 environmental issues is provided in Table 9.1 of this GEIS and summarized in narrative below.

Impacts of Refurbishment

[**Prev** | **Next** | **Table of Contents**]

- On-site land use impacts are expected to be of small significance at all sites. Temporary disturbance of land may be mitigated by restoration to its original condition after refurbishment. This is a Category 1 issue.
- Nuclear power plant atmospheric emissions would either remain constant during refurbishment or decrease if the plant were partially or totally shut down. Small quantities of fugitive dust and gaseous exhaust emissions from motorized equipment operation during construction and refurbishment would temporarily increase ambient concentrations of particulate matter and gaseous pollutants in the vicinity of the activity but would not be expected to measurably affect ambient concentrations of regulated pollutants off-site. Additional exhaust emissions from the vehicles of up to 2300 personnel could be cause for some concern in geographical areas of poor or marginal air quality, but a general conclusion about the significance of the potential impact cannot be drawn without considering the compliance status of each site and the numbers of workers to be employed during the outage. This is a Category 2 issue.
- Proven erosion control measures such as best management practices are expected to be implemented at all plants and to minimize impacts to local water quality from runoff in disturbed areas. Consequently, impacts of refurbishment on surface water quality are expected to be of small significance at all plants. Because the effects of refurbishment are considered to be of small significance and potential mitigation measures are likely to be costly,

the staff does not consider implementation of mitigation measures beyond best management practices to be warranted. This is a Category 1 issue.

- Additional water requirements during construction and refurbishment would be a small fraction of cooling water requirements of the operating power plant. If the plant were partially or totally shut down, cooling water use would decline. Water use during refurbishment is expected to have impacts of small significance on the local water supply. The only potential mitigation for any increase in water consumption would be to acquire the additional water from some other source. However, because this approach would provide very little, if any, environmental benefit and would be costly, the staff does not consider implementation of additional mitigation to be warranted. This is a Category 1 issue.
- Deep excavations and site dewatering would not be required during refurbishment. Consequently, the impacts of refurbishment on groundwater would be of small significance at all sites. No additional mitigation measures would be warranted because there would be no adverse impacts to mitigate. This is a Category 1 issue.
- Effluent discharges from the cooling system of a nuclear power plant would either remain constant during refurbishment or decrease if the plant were partially or totally shut down. Effects of changes in water withdrawals and discharges during refurbishment would be of small significance. No additional mitigation measures beyond those implemented during the current license term would be warranted because there would be no adverse impacts to mitigate. This is a Category 1 issue.
- The small on-site change in land use associated with refurbishment and construction could disturb or eliminate a small area of terrestrial habitat [up to 4 ha (10 acres)]. The significance of the loss of habitat depends on the importance of the plant or animal species that are displaced and on the availability of nearby replacement habitat. Impacts would be potentially significant only if they involved wetlands, staging or resting areas for large numbers of waterfowl, rookeries, restricted wintering areas for wildlife, communal roost sites, strutting or breeding grounds for gallinaceous birds, or rare plant community types. Because ecological impacts cannot be determined without considering site- and project-specific details, the potential significance of those impacts cannot be determined generically. This is a Category 2 issue.
- Because of refurbishment-related population increases, impacts on housing could be of moderate or large significance at sites located in rural and remote areas, at sites located in areas that have experienced extremely slow population growth (and thus slow or no growth in housing), or where growth control measures that limit housing development are in existence or have recently been lifted. This is a Category 2 issue.
- Tax impacts, which involve small to moderate increases in the direct and indirect tax revenues paid to local jurisdictions, are considered beneficial in all cases.
- In the area of public services, in-migrating workers could induce impacts of small to large significance to education, with the larger impacts expected to occur in sparsely populated areas. Impacts of small to moderate significance may occur to public utilities at some sites. Transportation impacts could be of large significance at some sites. These socioeconomic issues are Category 2.
- The impacts of refurbishment on other public services (public safety, social services, and tourism and recreation) are expected to be of small significance at all sites. No additional mitigation measures beyond those implemented during the current license term would be warranted because mitigation would be costly and the benefits would be small. These are Category 1 issues.
- In-migrating workers could induce impacts of small to moderate significance to off-site land use. The larger impacts are expected to occur in sparsely populated areas. This is a Category 2 issue.
- Based on the findings at the case study sites, refurbishment-related economic effects would range from small benefits to moderate benefits at all nuclear power plant sites. No adverse effects to economic structure would result from refurbishment-related employment.
- Site-specific identification of historic and archaeological resources and determination of impacts to them must occur during the consultation process with the State Historic Preservation Office (SHPO) as mandated by the National Historic Preservation Act. Impacts to historic resources could be large if the SHPO determines that significant historic resources would be disturbed or their historic character would be altered by plant refurbishment activities. The significance of potential impacts to historic and archaeological resources cannot be determined generically. This is a Category 2 issue.

- The impact on aesthetic resources is found to be of small significance at all sites. Because there will be no readily noticeable visual intrusion, consideration of mitigation is not warranted. This is a Category 1 issue.
- Radiation impacts to members of the public are considered to be of small significance because public exposures are within regulatory limits. Also, the estimated cancer risk to the average member of the public is much less than 1×10^{-6}. Because current mitigation practices have resulted in declining public radiation doses for nearly two decades, additional mitigation is not warranted. The impact on human health is a Category 1 issue.
- Occupational radiation exposure during refurbishment meets the ard of small significance. Because the as-low-as-reasonably-achievable (ALARA) program continues to reduce occupational doses, no additional mitigation program is warranted. This is a Category 1 issue.
- The significance of potential impacts to threatened and endangered species cannot be determined generically because compliance with the Endangered Species Act cannot be assessed without site-specific consideration of potential effects on threatened and endangered species. This is a Category 2 issue.

Impacts of Operation

[**Prev** | **Next** | **Table of Contents**]

- It is not possible to reach a conclusion about the significance of potential impacts to threatened and endangered species at this time because (1) the significance of impacts on such species cannot be assessed without site- and project-specific information that will not be available until the time of license renewal and (2) additional species that are threatened with extinction and that may be adversely affected by plant operations may be identified between the present and the time of license renewal. This is a Category 2 issue.
- The staff examined nine aspects of water quality that might be affected by power plant operations: current patterns at intake and discharge structures, salinity gradients, temperature effects on sediment transport, altered thermal stratification of lakes, scouring from discharged cooling water, eutrophication, discharge of biocides, discharge of other chemical contaminants (e.g., metals), and discharge of sanitary wastes. Open-cycle cooling systems are more likely than other cooling systems to have such effects because they withdraw and discharge very large volumes of water; however, the impacts for each of these effects were found to be of small significance for all plants, regardless of cooling system type. For each type of impact, the staff considered potential mitigation measures but found that none were warranted because they would be costly and would have very small environmental benefits. These are Category 1 issues.
- The staff found no potential for water use conflicts or riparian plant and animal community impacts of moderate or large significance for plants with open-cycle cooling systems because they are used on large water bodies. Because the potential mitigation measures are costly and because the potential benefits are small, the staff does not consider mitigation to be warranted. These are Category 1 issues.
- The staff found that water use conflicts and the effects of consumptive water use on in-stream aquatic and riparian terrestrial communities could be of moderate significance at some plants that employ cooling-tower or cooling-pond systems because they are often located near smaller water bodies. For plants with these cooling systems, these are Category 2 issues.
- The staff examined 12 potential effects that nuclear power plant cooling systems may have on aquatic ecology: (1) impingement of fish; (2) entrainment of fish (early life stages); (3) entrainment of phytoplankton and zooplankton; (4) thermal discharge effects; (5) cold shock; (6) thermal plume barriers to migrating fish; (7) premature emergence of aquatic insects; (8) stimulation of nuisance organisms; (9) losses from predation, parasitism, and disease among organisms exposed to sublethal stresses; (10) gas supersaturation; (11) low dissolved oxygen in the discharge; and (12) accumulation of contaminants in sediments or biota. Except for three potential impacts (entrainment of fish and shellfish, impingement of fish and shellfish, and thermal discharge effects), each of these was found to be of small significance at all plants. Because mitigation would be costly and provide little environmental benefit, no additional mitigation measures beyond those implemented during the current license term are warranted. These are Category 1 issues. The other three impacts would be of small significance at all plants employing cooling-tower cooling systems. Because mitigation would be costly and provide little environmental

benefit, no additional mitigation measures beyond those implemented during the current license term are warranted. For those plants, these are Category 1 issues. However, the impacts may be of greater significance at some plants employing open-cycle or cooling-pond systems; and these are Category 2 issues for those plants.

- The staff found that groundwater use of less than 0.0063 m^3/s (100 gal/min) is of small significance because the cone of depression will not extend beyond the site boundary. Conflicts might result from several types of groundwater use by nuclear power plants. If groundwater conflicts arose, they could be resolvable by deepening the affected wells, but no such mitigation is warranted because sites producing less than 0.0063 m^3/s (100 gal/min) would not have a cone of depression that extends beyond the site boundary. This is a Category 1 issue. Plants that extract more than 0.0063 m^3/s (100 gal/min), including plants using Ranney wells, may have groundwater use conflicts of moderate or large significance. Groundwater use is a Category 2 issue for such plants.
- Cooling system makeup water consumption may cause groundwater use conflicts. During times of low flow, surface water withdrawals for cooling tower makeup from small rivers can reduce groundwater recharge. Because the significance of such impacts cannot be determined generically, this is a Category 2 issue.
- Groundwater withdrawals could cause adverse effects on groundwater quality by inducing intrusion of lower-quality groundwater into the aquifer. The staff found that the significance of these potential impacts is of small significance in all cases. Because all plants except Grand Gulf use relatively small quantities of groundwaters and surface water intrusion at Grand Gulf would not preclude current water uses, the staff found that mitigation was not warranted. This is a Category 1 issue.
- Cooling ponds leak an undetermined quantity of water through the pond bottom. Because the water in cooling ponds is elevated in salts and metals, such leakage may contaminate groundwater. The staff found that groundwater quality impacts of ponds that are located in salt marshes would be of small significance in all cases because salt marshes already have poor water quality. This is a Category 1 issue. Cooling ponds that are not located in salt marshes may have groundwater quality impacts of small, moderate, or large significance. This is a Category 2 issue.
- Small amounts of ozone and substantially smaller amounts of oxides of nitrogen are produced by transmission lines; however, ozone concentrations generated by transmission lines are too low to cause any significant effects. The minute amounts of oxides of nitrogen produced are also insignificant. Thus, air quality impacts associated with the operational transmission lines during the renewal term are expected to be of small significance at all sites. Potential mitigation measures would be very costly and are not warranted. This is a Category 1 issue.
- The potential impact of cooling tower drift on crops and ornamental vegetation arising from operations during the license renewal term is expected to be of small significance for all nuclear plants. No mitigation measures beyond those implemented during the current license term are warranted because there have been no measurable effects on crops or ornamental vegetation from cooling tower drift. This is a Category 1 issue.
- The impact of cooling towers on natural plant communities should continue not to result in measurable degradation as a result of license renewal and will therefore be of small significance. Because the impacts of cooling tower drift on native plants are expected to be small and because potential mitigation measures would be costly, no mitigation measures beyond those during the current term license would be warranted. This is a Category 1 issue.
- Bird mortality from collision with power lines associated with nuclear plants is of small significance for all plants because bird mortality is expected to remain a small fraction of total collision mortality associated with all types of man-made objects. Because the numbers of birds killed from collision with cooling towers are not large enough to affect local population stability or species function within the ecosystem, consideration of further mitigation is not warranted. Both bird collision with power lines and bird collision with cooling towers are Category 1 issues.
- Because no threat to the stability of local wildlife populations or vegetation communities is found for any cooling pond, the impacts are found to be of small significance. Potential mitigation measures would include excluding wildlife (e.g., birds) from contaminated ponds, converting to a dry cooling system, or reducing plant output during fogging or icing conditions. The impacts are found to be so minor that consideration of additional mitigation measures is not warranted. These effects of cooling ponds are so minor and so localized that cumulative impacts are not a concern. This is a Category 1 issue.
- Maintaining power-line right-of-ways (ROWs) causes fluctuations in wildlife populations, but the long-term effects are of small significance. The staff found that bird collisions with transmission lines are of small significance. Also, transmission line maintenance and repair would have impacts of only small significance on floodplains and

wetlands. In each case, the staff found that potential mitigation measures beyond those implemented during the current license term would be costly and provide little environmental benefit, and thus are not warranted. These are Category 1 issues.

- Wildlife, livestock, and plants residing in power-line electromagnetic fields (EMF) apparently grow, survive, and reproduce as well as expected in the absence of EMF. The potential impact of EMF on terrestrial resources during the license renewal term is considered to be of small significance for all plants. Because the impact is of small significance and because mitigation measures could create additional environmental impacts and would be costly, no mitigation measures beyond those implemented during the current term license would be warranted. This is a Category 1 issue.
- Land use restrictions are necessary within transmission-line ROWs. The staff found these impacts to be of small significance at all sites. Mitigation beyond that imposed when ROWs were established might include relocating the transmission line. The staff concluded that such mitigation would not be warranted because it would be very costly and provide little environmental benefit. This is a Category 1 issue.
- During the license renewal term, the radiation dose commitment to the total worker population is projected to increase less than 5 percent at nuclear power plants under the typical scenario and less than 8 percent at any plant under the conservative scenario. The present operating experience results in about 30,000 person-rem/year for all licensed plants combined. After the period of refurbishment, routine operating conditions are expected to result in 32,000 person-rem/year for all plants combined. The risk associated with occupational radiation exposures after license renewal is expected to be of small significance at all plants. No mitigation measures beyond those implemented during the current license term are warranted because the existing ALARA process continues to be effective in reducing radiation doses. This is a Category 1 issue.
- Among the 150 million people who live within 50 miles of a U.S. nuclear power plant, about 30 million will die of spontaneous cancer unrelated to radiation exposure from nuclear power plants. This number is compared with approximately 5 calculated fatalities associated with potential nuclear-power-plant-induced cancer. The estimated annual cancer risk to the average individual is less than 1×10^{-6}. Public exposure to radiation during the license renewal term is of small significance at all sites, and no mitigation measures beyond those implemented during the current license term are warranted because current mitigation practices have resulted in declining public radiation doses and are expected to continue to do so. This is a Category 1 issue.
- The significance of potential for electrical shock from charges induced by transmission lines that may occur during the license renewal term cannot be evaluated generically because no National Electric Safety Code (NESC) review was performed for some of the earlier licensed plants. For those that underwent an NESC review, a change in the transmission line voltage may have been made since issuance of the initial operating license, or changes in land use since issuance of the original license could have occurred. This is a Category 2 issue.
- There is no consensus among scientists on whether 60-Hz EMF have a measurable human health impact. Because of inconclusive scientific evidence, the chronic effects of EMF would be not be categorized as either a Category 1 or 2 issue. If NRC finds that a consensus has been reached that there are adverse health effects, all license renewal applicants will have to address EMF effects in the license renewal process.
- Occupational health questions related to thermophilic organisms like *Legionella* are currently resolved using proven industrial hygiene principles to minimize worker exposures to these organisms in mists of cooling towers. Adverse occupational health effects associated with microorganisms are expected to be of small significance at all sites. Aside from continued application of accepted industrial hygiene procedures, no additional mitigation measures beyond those implemented during the current license term are warranted. This is a Category 1 issue.
- Thermophilic organisms may or may not be influenced by operation of nuclear power plants. The issue is largely unstudied. However, NRC recognizes a potential health problem stemming from heated effluents. Public health questions require additional consideration for the 25 plants using cooling ponds, lakes, canals, or small rivers because the operation of these plants may significantly enhance the presence of thermophilic organisms. The data for these sites are not now at hand, and it is impossible with current knowledge to predict the level of thermophilic organism enhancement at any given site. Thus, the impacts are not known and are site specific. Therefore, the magnitude of the potential public health impacts associated with thermal enhancement of *N. fowleri* cannot be determined generically. This is a Category 2 issue.

- The principal noise sources at power plants (cooling towers and transformers) do not change appreciably during the aging process. Because noise impacts have been found to be small and generally not noticed by the public, noise impacts are expected to be of small significance at all sites. Because noise reduction methods would be costly, and given that there have been few complaints, no additional mitigation measures are warranted for license renewal. This is a Category 1 issue.
- The staff examined socioeconomic effects of nuclear power plant operations during a license renewal period. Five of these would be of small significance at all sites: education, public safety, social services, recreation and tourism, and aesthetics. Because mitigation measures beyond those implemented during the current license term are costly and would offer little benefit, no additional mitigation measures are warranted. These are Category 1 issues. Four of the socioeconomic effects were found to have moderate or large significance at some sites: housing, transportation, public utilities (especially water supply), and off-site land use. These are Category 2 issues. In addition, the statute (National Historic Preservation Act) requires consultation; thus historic and archaeological resources are Category 2 issues.

Accidents

[**Prev** | **Next** | **Table of Contents**]

- The environmental impacts of postulated accidents were evaluated for the license renewal period in GEIS Chapter 5. All plants have had a previous evaluation of the environmental impacts of design-basis accidents. In addition, the licensee will be required to maintain acceptable design and performance criteria throughout the renewal period. Therefore, the calculated releases from design-basis accidents would not be expected to change. Since the consequences of these events are evaluated for the hypothetical maximally exposed individual at the time of licensing, changes in the plant environment will not affect these evaluations. Therefore, the staff concludes that the environmental impacts of design-basis accidents are of small significance for all plants. Because the environmental impacts of design basis accidents are of small significance and because additional measures to reduce such impacts would be costly, the staff concludes that no mitigation measures beyond those implemented during the current term license would be warranted. This is a Category 1 issue.
- The staff concluded that the generic analysis of severe accidents applies to all plants and that the probability-weighted consequences of atmospheric releases, fallout onto open bodies of water, releases to groundwater, and societal and economic impacts of severe accidents are of small significance for all plants. However, not all plants have performed a site-specific analysis of measures that could mitigate severe accidents. Consequently, severe accidents are a Category 2 issue for plants that have not performed a site-specific consideration of severe accident mitigation and submitted that analysis for Commission review.

Uranium Fuel Cycle and Management of Waste

[**Prev** | **Next** | **Table of Contents**]

- The radiological and nonradiological environmental impacts of the uranium fuel cycle have been reviewed. The review included a discussion of the values presented in Table S-3, an assessment of the release and impact of ^{222}Rn and of ^{99}Tc, and a review of the regulatory standards and experience of fuel cycle facilities. For the purpose of assessing the radiological impacts of license renewal, the Commission uses the standard that the impacts are of small significance if doses and releases do not exceed permissible levels in the Commission's regulation. Given the available information regarding the compliance of fuel-cycle facilities with applicable regulatory requirements, the Commission has concluded the actual impacts of the fuel cycle are at or below existing regulatory limits. Accordingly, the Commission concludes that individual radiological impacts of the fuel cycle (other than the disposal of spent fuel and high-level waste) are small. With respect to the nonradiological impact of the uranium fuel cycle, data concerning land requirements, water requirements, the use of fossil fuel, gaseous effluent, liquid effluent, and tailings solutions and solids, all listed in Table S-3, have been reviewed to determine the significance

of the environmental impacts of a power reactor operating an additional 20 years. The nonradiological environmental impacts attributable to the relicensing of an individual power reactor are found to be of small significance. The individual radiological and the nonradiological effects of the uranium fuel cycle are Category 1 issues.

The radiological impacts of the uranium fuel cycle on human populations over time (collective effects) have been considered within the framework of Table S-3. The 100-year environmental dose commitment to the U.S. population from the fuel cycle, high-level-waste and spent-fuel disposal excepted, is calculated to be about 14,800 man-rem, or 12 cancer fatalities, for each additional 20-year power-reactor operating term. Much of this, especially the contribution of radon releases from mines and tailing piles, consists of tiny doses summed over large populations. This same dose calculation can theoretically be extended to include many tiny doses over additional thousands of years as well as doses outside the United States. The result of such a calculation would be thousands of cancer fatalities from the fuel cycle, but this result assumes that even tiny doses have some statistical adverse health effect that will not ever be mitigated (for example, no cancer cure in the next thousand years) and that these dose projections over thousands of years are meaningful. However, these assumptions are questionable. In particular, science cannot rule out the possibility that there will be no cancer fatalities from these tiny doses. For perspective, the doses are very small fractions of regulatory limits and even smaller fractions of natural background exposure to the same populations. No standards exist that can be used to reach a conclusion as to the significance of the magnitude of the collective radiological effects. Nevertheless, some judgment as to the regulatory NEPA implication of this issue should be made, and it makes no sense to repeat the same judgment in every case. The Commission concludes that these impacts are acceptable in that these impacts would not be sufficiently large to require the NEPA conclusion, for any plant, that the option of extended operation under 10 CFR Part 54 should be eliminated. Accordingly, while the Commission has not assigned a single level of significance for the collective effects of the fuel cycle, this issue is considered Category 1.

There are no current regulatory limits for off-site releases of radionuclides from high-level-waste and spent-fuel disposal at the current candidate repository site at Yucca Mountain. If we assume that limits are developed along the lines of the 1995 National Academy of Sciences report and that, in accordance with the Commission's Waste Confidence Decision, a repository can and likely will be developed at some site that will comply with such limits, peak doses to virtually all individuals will be 100 mrem/year or less. However, while the Commission has reasonable confidence that these assumptions will prove correct, there is considerable uncertainty since the limits are yet to be developed, no repository application has been completed or reviewed, and uncertainty is inherent in the models used to evaluate possible pathways to the human environment. The National Academy report indicates that 100 mrem/year should be considered as a starting point for limits for individual doses but notes that some measure of consensus exists among national and international bodies that the limits should be a fraction of the 100 mrem/year. The lifetime individual risk from 100-mrem/year dose limit is about 3×10^{-3}. Doses to populations from disposal cannot now (or possibly ever) be estimated without very great uncertainty. Estimating cumulative doses to populations over thousands of years is more problematic. The likelihood and consequences of events that could seriously compromise the integrity of a deep geologic repository have been evaluated by the Department of Energy (DOE) and the NRC, and other federal agencies have expended considerable effort to develop models for the design and for the licensing of a high-level-waste repository, especially for the candidate repository at Yucca Mountain. More meaningful estimates of doses to population may be possible in the future as more is understood about the performance of the proposed Yucca Mountain repository. Such estimates would involve very great uncertainty, especially with respect to cumulative population doses over thousands of years. The standard proposed by the NAS is a limit on maximum individual dose. The relationship of potential new regulatory requirements, based on the NAS report, and cumulative population impacts has not been determined, although the report articulates the view that protection of individuals will adequately protect the population for a repository at Yucca Mountain. However, EPA's generic repository standards in 40 CFR Part 191 generally provide an indication of the order of magnitude of cumulative risk to population that could result from the licensing of a Yucca Mountain repository, assuming the ultimate standards will be within the range of standards now under consideration. The standards in 40 CFR Part 191 protect the population by imposing "containment requirements" that limit the

cumulative amount of radioactive material released over 10,000 years. The cumulative release limits are based on EPA's population impact goal of 1,000 premature cancer deaths worldwide for a 100,000-metric tonne (MTHM) repository.

Nevertheless, despite all the uncertainty surrounding the effects of the disposal of spent fuel and high-level waste, some judgment as to the regulatory NEPA implications of these matters should be made, and it makes no sense to repeat the same judgment in every case. Even taking the uncertainties into account, the Commission concludes that these impacts are acceptable in that these impacts would not be sufficiently large to require the NEPA conclusion, for any plant, that the option of extended operation under 10 CFR Part 54 should be eliminated. Accordingly, while the Commission has not assigned a single level of significance for the impacts of spent-fuel and high-level-waste disposal, this issue is considered Category 1.

- The radiological and nonradiological environmental impacts from the transportation of fuel and waste attributable to license renewal of a power reactor have been reviewed. Environmental impact data for transportation are provided in Table S-4. The estimated radiological effects are within the Commission's regulatory standards. Radiological impacts of transportation are therefore found to be of small significance when they are within the range of impact parameters identified in Table S-4. The nonradiological impacts are those from periodic shipments of fuel and waste by individual trucks or rail cars and thus would result in infrequent and localized minor contributions to traffic density. These nonradiological impacts are found to be small when they are within the range of impact parameters identified in Table S-4. Programs designed to reduce risk, which are already in place, provide for adequate mitigation. Table S-4 should continue to be the basis for case-by-case evaluations of transportation impacts of spent fuel until such time as detailed analysis of the environmental impacts of transportation to the Yucca Mountain repository becomes available. Transportation of fuel and waste is a Category 2 issue.
- The radiological and nonradiological environmental impacts from the storage and disposal of low-level radiological waste attributable to license renewal of a power reactor have been reviewed. The comprehensive regulatory controls that are in place and the low public doses being achieved at reactors ensure that the radiological impacts to the environment will remain small during the term of the renewed license. The maximum additional on-site land that may be required for low-level waste storage during the term of a renewed license and associated impacts will be small. Nonradiological environmental impacts on air and water will be negligible. The radiological and nonradiological environmental impacts of long-term disposal of low-level waste from any individual plants at licensed sites are small. The need for the consideration of mitigation alternatives within the context of renewal of a power reactor license has been considered, and the Commission concludes that its regulatory requirements already in place provide adequate mitigation incentives for on-site storage of low-level waste and that, for off-site disposal, mitigation would be a site-specific consideration in the licensing of each facility. In addition, the Commission concludes that there is reasonable assurance that sufficient low-level waste disposal capacity will be made available when needed for facilities to be decommissioned consistent with NRC decommissioning requirements. Low-level waste is a Category 1 issue.
- The radiological and nonradiological environmental impacts from the storage and disposal of mixed waste attributable to license renewal of a power reactor have been reviewed. The comprehensive regulatory controls and the facilities and procedures that are in place ensure proper handling and storage, as well as negligible doses and exposure to toxic materials for the public and the environment at all plants. License renewal will not increase the small, continuing risk to human health and the environment posed by mixed waste at all plants. The radiological and nonradiological environmental impacts of long-term disposal of mixed waste from any individual plant at licensed sites are small. The maximum additional on-site land that may be required for mixed waste is a small fraction of that needed for low-level waste storage during the term of a renewed license, and associated impacts will be small. Nonradiological environmental impacts on air and water will be negligible. The radiological and nonradiological environmental impacts of long-term disposal of mixed waste from any individual plants at licensed sites are small. The need for the consideration of mitigation alternatives within the context of renewal of a power reactor license has been considered, and the Commission concludes that its regulatory requirements already in place provide adequate mitigation incentives for on-site storage of mixed waste and that, for off-site disposal, mitigation would be a site-specific consideration in the licensing of each facility. In addition, the Commission concludes that

there is reasonable assurance that sufficient mixed waste disposal capacity will be made available when needed for faculties to be decommissioned consistent with NRC decommissioning requirements. Mixed waste is a Category 1 issue.

- The Commission's waste confidence finding at 10 CFR 51.23 leaves only the on-site storage of spent fuel during the term of plant operation as a high-level waste storage and disposal issue at the time of license renewal. The Commission's regulatory requirements and the experience with on-site storage of spent fuel in fuel pools and dry storage have been reviewed. Within the context of a license renewal review and determination, the Commission finds that there is ample basis to conclude that continued storage of existing spent fuel and storage of spent fuel generated during the license renewal period can be accomplished safely and without significant environmental impacts. Radiological impacts will be well within regulatory limits; thus radiological impacts of on-site storage meet the standard for a conclusion of small impact. The nonradiological environmental impacts have been shown to be not significant; thus they are classified as small. The overall conclusion for on-site storage of spent fuel during the term of a renewed license is that the environmental impacts will be small for each plant. The need for the consideration of mitigation alternatives within the context of renewal of a power reactor license has been considered, and the Commission concludes that its regulatory requirements already in place provide adequate mitigation incentives for on-site storage of spent fuel. On-site storage of spent fuel during the term of a renewed operating license is a Category 1 issue.
- The environmental impacts from the storage and disposal of nonradiological waste attributable to the license renewal of a power reactor have been reviewed. Regulatory and operational trends suggest a gradual decrease in quantities generated annually and the impacts during the terms of renewed licenses. Facilities and procedures are in place to ensure continued proper handling and disposal at all plants. Consequently, the generation and management of solid nonradioactive waste during the term of a renewed license is anticipated to result in only small impacts to the environment. Because the facilities and procedures that are in place are expected to ensure continued proper handling and disposal at each plant, additional mitigative measures are not a consideration in the context of a license renewal review. Nonradiological waste is a Category 1 issue.

Decommissioning

[**Prev** | **Next** | **Table of Contents**]

- Decommissioning after a 20-year license renewal would increase the occupational dose no more than 0.1 person-rem (compared with 7,000 to 14,000 person-rem for DECON decommissioning at 40 years) and the public dose by a negligible amount. License renewal would not increase to any appreciable extent the quantity or classification of LLW generated by decommissioning. Air quality, water quality, and ecological impacts of decommissioning would not change as a result of license renewal. There is considerable uncertainty about the cost of decommissioning; however, while license renewal would not be expected to change the ultimate cost of decommissioning, it would reduce the present value of the cost. The socioeconomic effects of decommissioning will depend on the magnitude of the decommissioning effort, the size of the community, and the other economic activities at the time, but the impacts will not be increased by decommissioning at the end of a 20-year license renewal instead of at the end of 40 years of operation. Incremental radiation doses, waste management, air quality, water quality, ecological, and socioeconomic impacts of decommissioning due to operations during a 20-year license renewal term would be of small significance. No mitigation measures beyond those provided by ALARA are warranted within the context of the license renewal process. The impacts of license renewal on radiation doses, waste management, air quality, water quality, ecological resources, and socioeconomics impacts from decommissioning are Category 1 issues.

Page Last Reviewed/Updated Sunday, March 13, 2011

©2000- 2011 NRC

Generic Environmental Impact Statement for License Renewal of Nuclear Plants (NUREG-1437 Vol. 1)

1. Introduction

[**Prev** | **Next** | **Table of Contents**]

1.1 Purpose of the GEIS

[**Prev** | **Next** | **Table of Contents**]

This Generic Environmental Impact Statement (GEIS) for license renewal of nuclear plants was undertaken to assess what is known about the environmental impacts that could be associated with license renewal and an additional 20 years of operation of individual plants. That assessment is summarized in this GEIS. This GEIS provides the technical basis for an amendment to the Commission's regulations, 10 CFR Part 51, Environmental Protection Regulations for Domestic Licensing and Related Regulatory Functions, with regard to the renewal of nuclear power plant operating licenses. The rule amendment and this document were initiated with the objective that the efficiency of the license renewal process be improved by documenting in this GEIS and codifying in the Commission's regulations the environmental impacts that are well understood. Thus, repetitive reviews of those impacts may be avoided. The Commission's decision to undertake a generic assessment of the environmental impacts associated with the renewal of a nuclear power plant operating license was motivated by its belief in the following:

(1) License renewal will involve nuclear power plants for which the environmental impacts of operation are well understood as a result of data evaluated from operating experience to date.
(2) Activities associated with license renewal are expected to be within this range of operating experience, thus environmental impacts can be reasonably predicted.
(3) Changes in the environment around nuclear power plants are gradual and predictable with respect to characteristics important to environmental impact analyses.

1.2 Renewal of a Plant Operating License--the Proposed Federal Action

[**Prev** | **Next** | **Table of Contents**]

Under NRC's environmental protection regulations in 10 CFR Part 51, renewal of a nuclear power plant operating license is identified as a major federal action significantly affecting the quality of the human environment, and thus an environmental impact statement (EIS) is required for a plant license renewal review. The EIS requirements for a plant-specific license renewal review are specified in 10 CFR Part 51. NRC's public health and safety requirements that must be met for the renewal of operating licenses for nuclear power plants are found in 10 CFR Part 54. Operating licenses may be renewed for up to 20 years beyond the 40-year term of the initial license. No limit on the number of renewals is specified. Part 54 requires license renewal applicants to perform specified types of evaluations and assessments of their facility and to provide sufficient information for the NRC to determine whether or not continued operation of the facility during the renewal term will endanger public health and safety or the environment. Specifically, licensees will be required to assess the effect of age-related degradation on certain long-lived, passive systems, structures, and

components that are within the scope of Part 54. The assessment results will determine what activities and modifications are necessary at the time of license renewal and throughout the renewal term to ensure continued safe operation of the plant. Most utilities are expected to begin preparation for license renewal about 10 to 20 years before expiration of their original operating licenses. The inspection, surveillance, test, and maintenance programs for license renewal would be integrated gradually into plant operations over a period of years. For the purpose of the analysis in this GEIS, NRC anticipates that plant refurbishment undertaken specifically for license renewal would probably be completed within normal plant outage cycles beginning 8 years before the original license expires and one longer outage, if a major refurbishment item is involved. Activities associated with license renewal and operation of a plant for an additional 20 years are discussed in Chapter 2.

1.3 Purpose and Need for the Action

[**Prev** | **Next** | **Table of Contents**]

The Commission will act on an applications for license renewal submitted by a licensee of an operating nuclear power plant. Although a licensee must have a renewed license to operate a plant beyond the term of the existing operating license, the possession of that license is just one of a number of conditions that must be met for the licensee to continue plant operation during the term of the renewed license. State regulatory agencies and the owners of the plant would ultimately decide whether the plant will continue to operate based on factors such as need for power or other matters within the State's jurisdiction or the purview of the owners. Economic considerations will play a primary role in the decision made by State regulatory agencies and the owners of the plant. Thus, for license renewal reviews, the Commission has adopted the following definition of purpose and need:

The purpose and need for the proposed action (renewal of an operating license) is to provide an option that allows for power generation capability beyond the term of a current nuclear power plant operating license to meet future system generating needs, as such needs may be determined by State, utility, and, where authorized, Federal (other than NRC) decision makers.

This definition of purpose and need reflects the Commission's recognition that, absent findings in the safety review required by the Atomic Energy Act of 1954, as amended, or findings in the NEPA environmental analysis that would lead the NRC to reject a license renewal application, the NRC has no role in the energy planning decisions of State regulators and utility officials as to whether a particular nuclear power plant should continue to operate. From the perspective of the licensee and the State regulatory authority, the purpose of renewing an operating license is to maintain the availability of the nuclear plant to meet system energy requirements beyond the term of the plant's current license. The underlying need that will be met by the continued availability of the nuclear plant is defined by various operational and investment objectives of the licensee. Each of these objectives may be dictated by State regulatory requirements or strongly influenced by State energy policy and programs. In cases of interstate generation or other special circumstances, Federal agencies such as the Federal Energy Regulatory Commission (FERC) or the Tennessee Valley Authority (TVA) may be involved in making these decisions. The objectives of the various entities involved may include lower energy cost, increased efficiency of energy production and use, reliability in the generation and distribution of electric power, improved fuel diversity within the State, and environmental objectives such as improved air quality and smaller land use impacts.

1.4 Alternatives to the Proposed Action

[**Prev** | **Next** | **Table of Contents**]

In Chapter 8, the Commission has considered the environmental consequences of the no action alternative (i.e., denying a license renewal application) and the environmental consequences of the various alternatives available for replacing the lost generating capacity that would be available to a utility and other responsible energy planners. No conclusions are made in this document about the relative environmental consequences of license renewal or the construction and operation of alternative facilities for generating electric energy. The information in the GEIS is available for use by the

NRC and the licensee in performing the site-specific analysis of alternatives. This information will be updated periodically, as appropriate. For individual plant reviews, information codified in the rule, information developed in the GEIS, and any significant new information introduced during the plant-specific review, including any information received from the State or members of the public, will be considered in reaching conclusions in the supplemental EIS. For an individual plant review, the environmental impacts of license renewal are to be compared with those of alternative energy sources so as to determine whether the adverse environmental impact of license renewal are so great that preserving the option of license renewal for energy planning decision makers would be unreasonable.

1.5 Analytical Approach Used in the GEIS

[**Prev** | **Next** | **Table of Contents**]

The GEIS summarizes the approach and findings of a systematic inquiry into the potential environmental consequences of renewing the licenses and operating individual nuclear power plants an additional 20 years. The inquiry identified the attributes of the nuclear power plants, such as major features and plant systems, and the ways the plants can affect the environment. The inquiry also identified the possible refurbishment activities and modifications to maintenance and operating procedures that might be undertaken given the requirements of the safety review as provided for in the Commission's regulations 10 CFR Part 54 or given a utility's motivation for increased economic efficiency. To identify possible initiators of environmental impacts, two scenarios were developed from the possible set of refurbishment activities and continuation of plant operation during the renewal term. One scenario was developed as a typical but somewhat conservative scenario for license renewal, intended to be representative of the type of programs that many licensees seeking license renewal might implement. The other scenario is highly conservative, encompassing considerably more activities, and is intended to characterize a reasonable upper bound of impact initiators that might result from license renewal. These scenarios are discussed in Chapter 2 and in more detail in Appendix B. The linkages between the impact initiators and the environment and the potential environmental impact consequences are developed in the other chapters of the GEIS.

Previous experience with nuclear power plant operation and refurbishment was reviewed in developing the possible scope of environmental impacts that complemented the identification of impact initiators and linkages to the environment. This experience is found in a variety of sources. A list of possible impacts is found in NUREG-0099, Regulatory Guide 4.2, Rev. 2 (July 1976) and in NUREG-0555, "Environmental Standard Review Plans for the Environmental Review of Construction Permit Applications for Nuclear Power Plants" (May 1979). Information was gathered from the environmental impact statements prepared for individual plants at the construction permit and operating license stages. A survey of individual plant operating and refurbishment experience was designed by Oak Ridge National Laboratory (ORNL) and the NRC staff and was administered by the Nuclear Energy Institute (NEI), formerly the Nuclear Utility Management and Resources Council (NUMARC). ORNL analysts reviewed the literature relevant to nuclear power plant impacts on the environment and surveyed by telephone and letter federal, state, and local authorities who have responsibilities that would make them cognizant of the environmental impacts of individual nuclear power plants. The information gathered for this GEIS was supplemented at several stages by comments and information provided by various interests groups at public workshops and by written comments in response to information noticed in the Federal Register. The NRC staff's responses to comments are provided in NUREG-1529, *Public Comments on the Proposed 10 CFR Part 51 Rule for Renewal of Nuclear Power Plant Operating Licenses and Supporting Documents; Review of Concerns and NRC Staff Response*.

The general analytical approach to each environmental issue was to (1) describe the activity that affects the environment, (2) identify the population or resource that is affected, (3) assess the nature and magnitude of the impact on the affected population or resource, (4) characterize the significance of the effect for both beneficial and adverse effects, (5) determine whether the results of the analysis applies to all plants, and (6) consider whether additional mitigation measures would be warranted for impacts that would have the same significance level for all plants.

A standard of significance was established for assessing environmental issues; and, because significance and severity of an impact can vary with the setting of a proposed action, both "context" and "intensity" as defined in the Council on

Environmental Quality regulations (40 CFR 1508.27) were considered. With these standards as a basis, each issue was assigned to one of the three following significance levels:

Small: For the issue, environmental effects are not detectable or are so minor that they will neither destabilize nor noticeably alter any important attribute of the resource. For the purposes of assessing radiological impacts, the Commission has concluded that those impacts that do not exceed permissible levels in the Commission's regulations are considered small.
Moderate: For the issue, environmental effects are sufficient to alter noticeably but not to destabilize important attributes of the resource.
Large: For the issue, environmental effects are clearly noticeable and are sufficient to destabilize important attributes of the resource.
The discussion of each environmental issue in the GEIS includes an explanation of how the significance category was determined. For issues in which probability of occurrence is a key consideration (i.e., accident consequences), the probability of occurrence has been factored into the determination of significance. In determining the significance levels it was assumed that ongoing mitigation measures would continue and that mitigation measures employed during plant construction would be employed during refurbishment, as appropriate. The potential benefits of additional mitigation measures were not considered in determining significance levels.

In addition to determining the significance of environmental impacts associated with an issue for that issue, a determination was made whether the analysis in the GEIS could be applied to all plants and whether additional mitigation measures would be warranted. The categories to which an issue may be assigned follow.

Category 1: For the issue, the analysis reported in the Generic Environmental Impact Statement has shown:
(1)the environmental impacts associated with the issue have been determined to apply either to all plants or, for some issues, to plants having a specific type of cooling system or other specified plant or site characteristics;
(2)a single significance level (i.e., small, moderate, or large) has been assigned to the impacts (except for collective off-site radiological impacts from the fuel cycle and from high-level waste and spent fuel); and
(3)mitigation of adverse impacts associated with the issue has been considered in the analysis and it has been determined that additional plant-specific mitigation measures are likely not to be sufficiently beneficial to warrant implementation.
The generic analysis of the issue may be adopted in each plant-specific review.

Category 2: For the issue, the analysis reported in the GEIS has shown that one or more of the criteria of Category 1 cannot be met, and therefore, additional plant-specific review is required.
If, for an environmental issue, the three Category 1 criteria apply to all plants, that issue is Category 1, and the generic analysis should be used in a license renewal review for all plant applications and supplemental environmental impact statements. If the three Category 1 criteria apply to a subset of plants that are readily defined by a common plant characteristic, notably the type of cooling system, the population of plants is partitioned into the set of plants with the characteristic and the set without the characteristic. For the set of plants with the characteristic, the issue is Category 1, and the generic analysis should be used in the license renewal review for those plants. For the set of plants without the characteristic, the issue is Category 2, and a site-specific analysis for that issue will be performed as part of the license renewal review. The review of a Category 2 issue may focus on the particular aspect of the issue that causes the Category 1 criteria not to be met. For example, severe accident mitigation design alternatives under the issue "severe accidents" is the focus for a plant-specific review because the other aspects of the issue, specifically the off-site consequences, have been adequately addressed in the GEIS.

1.6 Scope of the GEIS

[**Prev** | **Next** | **Table of Contents**]

This final GEIS assesses 92 environmental issues. Sixty-eight of these issues are found to be Category 1 and are identified in 10 CFR Part 51 as not requiring additional plant-specific analysis. Guidance on the analyses required for

each of the other 24 issues is provided in 10 CFR Part 51. A summary of the findings for the 92 environmental issues is provided in Table 9.1 of this GEIS. That table has been codified in Appendix B to Subpart A of 10 CFR Part 51 (Table B-1).

Preparing the plants for an additional 20 years of operations is an important factor in assessing the type and extent of environmental impacts. Consequently, Chapter 2 describes (1) the two scenarios that were developed to characterize refurbishment activities to prepare the plant for operations during the license renewal term and (2) the possible differences between past operations and anticipated operations during the license renewal period. With Chapter 2 as a basis, Chapter 3 projects and assesses the potential environmental impacts associated with refurbishment; and Chapter 4 examines the potential environmental impacts associated with operations during the license renewal period. In most ways, the environmental effects of license renewal are found to be similar to those of normal operations.

The implications for license renewal on the environmental impacts associated with accidents, the uranium fuel cycle and waste management, and decommissioning are discussed in separate chapters. Chapter 5 addresses the ways in which the impacts of potential design basis and severe accidents may be affected by operation of the plants for an additional 20 years. Chapter 6 discusses the extent to which license renewal and an additional 20 years of operation will affect the environmental impacts related to the uranium fuel cycle and the management (storage and disposal) of nonradioactive solid waste, low-level radioactive waste, mixed waste (radioactive and chemically hazardous), spent fuel, and transportation of radioactive wastes as generated at a plant. Chapter 7 assesses the extent to which the license renewal and an additional 20 years of operation would affect the environmental impacts of decommissioning a plant.

Chapter 8 describes the potential environmental effects of terminating plant operations at the end of the current license term and the effects that would be associated with various alternative sources of energy. Because many environmental impacts of energy technologies are site specific, this chapter reaches no conclusions about the significance of these effects nor does it reach any conclusions about the preferability of license renewal or any alternative to it. The information in this chapter is intended to serve as an aid for preparers of plant-specific license renewal impact assessments.

Finally, Chapter 9 summarizes the analytical findings reached in this GEIS.

1.7 Implementation of the Rule

[**Prev** | **Next** | **Table of Contents**]

1.7.1 General Requirements

The regulatory requirements for performing a NEPA review for a license renewal application are similar to the NEPA review requirements for other major plant licensing actions. Consistent with the current NEPA practice for major plant licensing actions, an applicant is required to submit an environmental report that analyzes the environmental impacts associated with the proposed action, considers alternatives to the proposed action, and evaluates any alternatives for reducing adverse environmental effects. Additionally, the NRC staff is required to prepare a supplemental environmental impact statement for the proposed action, issue the statement in draft for public comment, and issue a final statement after considering public comments on the draft. These requirements are found in the Commissions regulations at 10 CFR Part 51.

The review requirements for license renewal deviates from NRC's traditional NEPA review practice in some areas. First, the amendment codifies certain environmental impacts associated with license renewal that are analyzed in this GEIS. Accordingly, additional analyses for certain impacts codified by this rulemaking need not be presented in an applicant's environmental report for license renewal nor in the Commission's (including NRC staff, adjudicatory officers, and the Commission itself) draft and final SEIS and other environmental documents developed for the proceeding. Secondly, the amendment reflects the Commission's decision to limit its NEPA review for license renewal to a consideration of the environmental effects of the proposed action and alternatives to the proposed action. Finally,

the amendment contains a decision standard that the Commission will use in determining the acceptability of the environmental impacts of individual license renewals.

The Commission and the applicant will also in some cases (e.g., severe accident consequences) consider alternatives to reduce or mitigate environmental impacts. The Commission has concluded that, for license renewal, the issues of need for power and utility economics should be reserved for State and utility officials to decide. Accordingly, the NRC will not conduct an analysis of these issues in the context of license renewal or perform traditional cost-benefit balancing in license renewal NEPA reviews. Finally, the rule does not codify any conclusions regarding the subject of alternatives. Consideration of and decisions regarding alternatives will occur at the site-specific stage.

1.7.2 Applicant's Environmental Report

The applicant's environmental report must contain an analysis of the environmental impacts of renewing a license, the environmental impacts of alternatives, and mitigation alternatives. In preparing the analysis of environmental impacts contained in the environmental report, the applicant should refer to the data provided in 10 CFR Part 51, Appendix B. The applicant is not required to provide an analysis in the environmental report of those issues identified as Category 1 issues in Table B-1 in Appendix B. For those issues identified as Category 2 in Table B-1, the applicant must provide a specified additional analysis beyond that contained in Table B-1. Section 10 CFR 51.53(c)(3)(ii) specifies the subject areas of the analysis that must be addressed for the Category 2 issues.

Pursuant to 10 CFR 51.45(c), 10 CFR 51.53(c)(2) requires the applicant to consider possible actions to mitigate the adverse impacts associated with the proposed action. This consideration is limited to designated Category 2 matters. Pursuant to 10 CFR 51.45(d), the environmental report must include a discussion of the status of compliance with applicable Federal, State, and local environmental standards. Also, 10 CFR 51.53(c)(2) specifically excludes from consideration in the environmental report the issues of need for power, the economic costs and benefits of the proposed action, economic costs and benefits of alternatives to the proposed action, or other issues not related to environmental effects of the proposed action and associated alternatives. In addition, the requirements in 10 CFR 51.45 are consistent with the exclusion of economic issues in 10 CFR 51.53(c)(2).

Pursuant to 10 CFR 51.45(c), 10 CFR 51.53(c)(2) requires the applicant to consider the environmental impacts of alternatives to license renewal in the environmental report. The treatment of alternatives in the environmental report should be limited to the environmental impacts of such alternatives. The amended regulations do not require a discussion of the economic costs and benefits of these alternatives in the environmental report for the operating license renewal stage except as necessary to determine whether an alternative should be included in the range of alternatives considered or whether certain mitigative actions are appropriate. The analysis should demonstrate consideration of a reasonable set of alternatives to license renewal. In preparing the alternatives analysis, the applicant may consider information regarding alternatives in this GEIS.

The Commission has developed a new approach to making decisions for environmental impact statements for license renewal. This decision standard differs from past Commission practice. The amended regulations for license renewal do not require applicants to apply this decision standard to the information generated in their environmental report (although the applicant is not prohibited from doing so if it desires). Under NEPA, the Commission has the final authority and responsibility for making such a decision regarding the environmental acceptability of the proposed renewal license. However, the NRC staff will use the information contained in the environmental report in preparing the environmental impact statement upon which the Commission will base its final decision.

Consistent with the NRC's current NEPA practice, an applicant must include alternatives to reduce or mitigate adverse environmental impacts in its environmental report. However, for license renewal, the Commission has generically considered mitigation for environmental issues associated with renewal and has concluded that no additional site-specific consideration of mitigation is necessary for many issues. The Commission's consideration of mitigation for each issue included identification of current activities that adequately mitigate impacts and an assessment as to whether certain impacts are so insignificant that mitigation is not warranted. The Commission has considered mitigation for all

impacts designated as Category 1 in Table B-1. Therefore, a license renewal applicant need not address mitigation for Category 1 issues in Table B-1.

1.7.3 The NRC's Supplemental Environmental Impact Statement

The Commission is required to prepare a supplemental environmental impact statement (SEIS), consistent with 10 CFR 51.20(b)(2). This statement will serve as the Commission's independent analysis of the environmental impacts of license renewal as well as a comparison of these impacts to the environmental impacts of alternatives. This document will also present the preliminary recommendation by the NRC staff regarding the proposed action. The provisions in 10 CFR 51.71 and 51.95 to reflect the Commission's approach to addressing the environmental impacts of license renewal in an SEIS.

The issues of need for power, the economic costs and benefits of the proposed action and economic costs and benefits of alternatives to the proposed action are specifically excluded from consideration in the supplemental environmental impact statement for license renewal by 10 CFR 51.95(c), except as these costs and benefits are either essential for a determination regarding the inclusion of an alternative in the range of alternatives considered or relevant to mitigation. The environmental report does not need to discuss issues related to other than environmental effects of the proposed action and associated alternatives. The requirements in 10 CFR 51.71(d) and (e) are consistent with the exclusion of economic issues in 10 CFR 51.95(c). Additionally, 10 CFR 51.95 allows information from previous NRC site-specific environmental reviews, as well as NRC final generic environmental impact statements, to be referenced in supplemental environmental impact statements.

1.7.4 Public Scoping and Public Comments on the SEIS

Consistent with NRC's NEPA practice, the NRC staff will hold a public meeting in order to inform the local public of the proposed action and receive comments. In addition, the SEIS will be issued in draft for public comment in accordance with 10 CFR 51.91 and 51.93. In both the public scoping process and the public comment process, the Commission will accept comments on all previously analyzed issues and information codified in Table B-1 of 10 CFR Part 51, Appendix B, and will determine whether these comments provide any information that is new and significant compared with that previously considered in the GEIS. If the comments are determined to provide new and significant information bearing on the previous analysis in the GEIS, these comments will be considered and appropriately factored into the Commission's analysis in the SEIS. Public comments on the site-specific additional information provided by the applicant regarding Category 2 issues will be considered in the SEIS.

1.7.5 Commission's Analysis and Preliminary Recommendation

The Commission's draft SEIS will include its analysis of the environmental impacts of the proposed license renewal action and the environmental impacts of the alternatives to the proposed action. The Commission will utilize and integrate the codified environmental impacts of license renewal as provided in Table B-1 of 10 CFR Part 51, Appendix B (supplemented by the underlying analyses in the GEIS), and the appropriate site-specific analyses of Category 2 issues and any new issues identified during the scoping and public comment process, to arrive at a conclusion regarding the sum of the environmental impacts associated with license renewal. These impacts will then be compared, quantitatively or qualitatively as appropriate, with the environmental impacts of the considered alternatives. The analysis of alternatives in the SEIS will be limited to the environmental impacts of these alternatives and will be prepared in accordance with 10 CFR 51.71 and of 10 CFR Part 51, Subpart A, Appendix A. The analysis of impacts of alternatives provided in the GEIS may be referenced in the SEIS as appropriate. The alternatives discussed in the GEIS include a reasonable range of different methods for power generation. The analysis in the draft SEIS will consider mitigation actions for designated Category 2 matters and will consider the status of compliance with Federal, State, and local environmental requirements as required by 10 CFR 51.71(d). Consistent with 10 CFR 51.71(e), the draft supplemental environmental impact statement must contain a preliminary recommendation regarding license renewal based on consideration of the information on the environmental impacts of license renewal and of alternative energy sources contained in the SEIS. To reach its recommendation, the NRC staff must determine whether the adverse environmental impacts of license renewal are so great that preserving the option of license renewal for energy planning decision makers would be unreasonable. This requirement is contained in 10 CFR 51.95(c)(4).

1.7.6 Final Supplemental Environmental Impact Statement

The Commission will issue a final supplemental environmental impact statement for a license renewal application in accordance with 10 CFR 51.91 and 51.93 after considering the public comments related to new issues identified from the scoping and public comment process, Category 2 issues, and any new and significant information regarding previously analyzed and codified Category 1 issues. Pursuant to 10 CFR 51.102 and 51.103, the Commission will provide a record of its decision regarding the environmental impacts of the proposed action. In making a final decision, the Commission must determine whether the adverse environmental impacts of license renewal (when compared with the environmental impacts of other energy generating alternatives) are so great that preserving the option of license renewal for energy planning decision makers would be unreasonable.

All comments on the applicability of the analyses of impacts codified in the rule and the analysis contained in the draft supplemental EIS will be addressed by NRC in the final supplemental EIS in accordance with 40 CFR § 1503.2, regardless of whether the comment is directed to impacts in Category 1 or 2. Such comments will be addressed in following manner:

a. NRC's response to a comment regarding the applicability of the analysis of an impact codified in the rule to the plant in question may be a statement and explanation of its view that the analysis is adequate including, if applicable, consideration of the significance of new information. A commenter dissatisfied with such a ay file a petition for rulemaking under 10 CFR § 2.802. Procedures for the submission of petitions for rulemaking are explained in Appendix I. If the commenter is successful in persuading the Commission that the new information does indicate that the analysis of an impact codified in the rule is incorrect in significant respects (either in general or with respect to the particular plant), then a rulemaking proceeding will be initiated.
b. If the commenter provides new information that is relevant to the plant and is also relevant to other plants (i.e., generic information) and that information demonstrates that the analysis of an impact codified in the final rule is incorrect, the NRC staff will seek Commission approval either to suspend the application of the rule on a generic basis with respect to the analysis or to delay granting the renewal application (and possibly other renewal applications) until therule can be amended. The updated GEIS would reflect the corrected analysis and any additional consideration of alternatives as appropriate.
c. If a commenter provides new, site-specific information that demonstrates that the analysis of an impact codified in the rule is incorrect with respect to the particular plant, then the NRC staff will seek Commission approval to waive the application of the rule with respect that analysis in that specific renewal proceeding. The supplemental EIS would reflect the corrected analysis as appropriate.

1.8 References

[**Prev** | **Next** | **Table of Contents**]

NUREG-1529, *Public Comments on the Proposed 10 CFR Part 51 Rule for Renewal of Nuclear Power Plant Operating Licenses and Supporting Documents; Review of Concerns and NRC Response*, U.S. Nuclear Regulatory Commission, Washington, D.C., to be published.

Page Last Reviewed/Updated Sunday, March 13, 2011

©2000- 2011 NRC

Generic Environmental Impact Statement for License Renewal of Nuclear Plants (NUREG-1437 Vol. 1)

2. Description of Nuclear Power Plants and Sites, Plant Interaction with the Environment, and Environmental Impact Initiators Associated with License Renewal

[**Prev** | **Next** | **Table of Contents**]

2.1 Introduction

[**Prev** | **Next** | **Table of Contents**]

Currently, 118[1] commercial nuclear power plants are located at 74 sites in 33 of the contiguous United States. Of these, 57 sites are located east of the Mississippi River, with most of this nuclear capacity located in the Northeast (New England states, New York, and Pennsylvania); the Midwest (Illinois, Michigan, and Wisconsin); and the Southeast (the Carolinas, Georgia, Florida, and Alabama). No commercial nuclear power plants are located in Alaska or Hawaii. Approximately half of these 74 sites contain two or three nuclear units per site. Three of the 118 plants have been shut down and will be decommissioned. The plant characteristics and environmental settings for these nuclear power plant sites are provided in Appendix A. Table 2.1 provides a summary overview of the plants considered in preparing this Generic Environmental Impact Statement (GEIS).

The total capacity of generating U.S. commercial nuclear power plants is approximately 99 GW(e), with plant generating capacities ranging from 67 MW(e) to 1270 MW(e). In 1992, the U.S. electric utility industry generated about 2.8 x 10^{12} kWh, 21.6 percent of which was supplied by nuclear power. The range of annual electricity production for these plants is approximately 390 x 10^6 kWh/year to 6900 x 10^6 kWh/year using an assumed annual capacity factor of 62 percent. It is anticipated that the electric utility industry will seek to operate many of these nuclear power plants beyond the current operating license term of 40 years. This GEIS examines how these plants and their interactions with the environment would change if such plants were allowed to operate (under the proposed license renewal regulation 10 CFR Part 54) for a maximum of 20 years past the term of the original plant license of 40 years.

The purpose of this section is to provide an orientation from the perspective of environmental considerations and assessments. Section 2.2 describes commercial nuclear power plants and their major features and plant systems. Section 2.3 describes the ways nuclear power plants interact with and affect the environment. The license renewal rule, particularly its requirements that may result in changes to nuclear plant environmental impacts, is discussed in Section 2.4. Section 2.5 reviews the generation of particular environment impacts, or precursors to such impacts, that are typical of current nuclear plant operation. It discusses the "baseline" values to be used in comparing incremental effects resulting from license renewal. Section 2.6 describes major refurbishment activities and changes that could occur at nuclear power plants during license renewal refurbishment and the extended years of operation. This section provides the background for more thorough evaluations and environmental impact assessments discussed in Sections 3 through 10.

2.2 Plant and Site Description and Plant Operation

2.2.1 External Appearance and Setting

Nuclear power plants generally contain four main buildings or structures:

- Containment or reactor building. A massive containment structure that houses the reactor vessel, the suppression pool [boiling-water reactors (BWRs) only], steam generators, pressurizer [pressurized-water reactors (PWRs) only], pumps, and associated piping. The building is generally designed to withstand such disasters as hurricanes, earthquakes, and aircraft collisions. The containment's ability to withstand such disasters, as well as the effects of accidents initiated by system failures, is the principal deterrent to release of radioactive materials to the environment.
- Turbine building. Plant structures that house the steam turbine and generator, condenser, waste heat rejection system, pumps, and equipment that supports those systems.
- Auxiliary buildings. Buildings that house such support systems as the ventilation system, the emergency core cooling system, the water treatment system, and the waste treatment system, along with fuel storage facilities and the plant control room.
- Cooling towers. Structures designed to remove excess heat from the condenser without dumping such heat directly into water bodies.

A plant site also contains a large switchyard, where the electric voltage is stepped up and fed into the regional power distribution system, and may also include various administrative and security buildings. During the operating life of a plant, its basic appearance remains unchanged.

Typically, nuclear power plant sites and the surrounding area are flat-to-rolling countryside in wooded or agricultural areas. More than 50 percent of the sites have 80-km (50-mile) population densities of less than 200 persons per square mile, and over 80 percent have 80-km (50-mile) densities of less than 500 persons per square mile. The most notable exception is the Indian Point Station, located within 80 km (50 miles) of New York City, which has a projected 1990 population density within 80 km (50 miles) of almost 2000 persons per square mile.

Site areas range from 34 ha (84 acres) for the San Onofre Nuclear Generating Station in California to 12,000 ha (30,000 acres) for the McGuire Nuclear Station in North Carolina. As shown in Table 2.1, 28 site areas range from 200 to 400 ha (500 to 1000 acres), and an additional 12 sites are in the 400- to 800-ha (1000- to 2000-acre) range. Thus, almost 60 percent of the plant sites encompass 200 to 800 ha (500 to 2000 acres). Larger land-use areas are associated with plant cooling systems that include reservoirs, artificial lakes, and buffer areas.

2.2.2 Reactor Systems

U.S. reactors employed for domestic electric power generation are conventional (thermal) light-water reactors (LWRs), using water as moderator and coolant. The two types of LWRs are PWRs (Figure 2.1) and BWRs (Figure 2.2). Of the 118 power reactors in the United States, 80 are PWRs and 38 are BWRs.

Table 2.1 Nuclear power plant baseline information

Plant	Unit	Operating license	License expiration	Electrical rating [MW(e)]	Reactor type[a]	Steam supply system vendor[b]	Cooling system[c]	Cooling water source	Condenser flow rate (10^3 gal/min)	Intake structure
Arkansas	1	1974	2014	850	PWR	B&W	OT	Dardanelle	765	3220-ft cana
Nuclear One	2	1978	2018	912	PWR	CE	NDCT	Reservoir	422	
Beaver	1	1976	2016	835	PWR	WEST	NDCT	Ohio River	480	At river edge
Valley	2	1987	2027	836	PWR	WEST	NDCT		480	

Bellefonte Nuclear Plant	1 2	-- --	-- --	1,213 1,213	PWR PWR	B&W B&W	NDCT NDCT	Guntersville Lake	410 410	Intake channel
Big Rock Point Nuclear Plant	1	1962	2002	72	BWR	GE	OT	Lake Michigan	49	Underwater crib
Braidwood Station	1 2	1987 1988	2027 2028	1,120 1,120	PWR PWR	WEST WEST	CCCP CCCP	Kankakee River	730 730	At lake shore
Browns Ferry Nuclear Power Station	1 2 3	1973 1974 1976	2013 2014 2016	1,065 1,065 1,065	BWR BWR BWR	GE GE GE	OT with towers	Tennessee River	630 630 630	In small river inlet
Brunswick Steam Electric Plant	1 2	1976 1974	2016 2014	821 821	BWR BWR	GE GE	OT OT	Cape Fear River	675 675	3-mile canal from river
Byron Station	1 2	1985 1987	2025 2027	1,120 1,120	PWR PWR	WEST WEST	NDCT NDCT	Rock River	632 632	On river bank
Callaway Plant	1	1984	2024	1,171	PWR	WEST	NDCT	Missouri River	530	From river
Calvert Cliffs Nuclear Power Plant	1 2	1974 1976	2014 2016	845 845	PWR PWR	CE CE	OT OT	Chesapeake Bay	1,200 1,200	560 ft from shore
Catawba Nuclear Station	1 2	1985 1986	2025 2026	1,145 1,145	PWR PWR	WEST WEST	MDCT MDCT	Lake Wylie	660 660	Skimmer wall
Clinton Power Station	1	1987	2027	933	BWR	GE	OT	Salt Creek	569	Shoreline of creek
Comanche Peak Steam Electric Station	1 2	1989 --	2029 --	1,150 1,150	PWR PWR	WEST WEST	OT OT	Squaw Creek Reservoir	1,030 1,030	Shore of reservoir
Donald C. Cook Nuclear Power Plant	1 2	1974 1977	2014 2017	1,030 1,100	PWR PWR	WEST WEST	OT OT	Lake Michigan	800 800	2,250 ft from shore
Cooper Nuclear Station	--	1974	2014	778	BWR	GE	OT	Missouri River	631	At shoreline
Crystal River Nuclear Plant	3	1977	2017	825	PWR	B&W	OT	Gulf of Mexico	680	16,000 ft from shore

Davis-Besse Nuclear Power Station	1	1977	2017	906	PWR	B&W	NDCT	Lake Erie	480	Submerged 3,000 ft off shore
Diablo Canyon Nuclear Power Plant	1 2	1984 1985	2024 2025	1,086 1,119	PWR PWR	WEST WEST	OT OT	Pacific Ocean	863 863	At shore with break wall
Dresden Nuclear Power Station	2 3	1969 1971	2010 2011	794 794	BWR BWR	GE GE	Cooling lake and spray canal	Kankakee River	471 471	Canal from Kankakee River
Duane Arnold Energy Center	1	1974	2014	538	BWR	GE	MDCT	Cedar River	290	Shoreline
Joseph M. Farley Nuclear Plant	1 2	1977 1981	2017 2021	829 829	PWR PWR	WEST WEST	MDCT MDCT	Chattahoochee River	635 635	River to storage pond
Enrico Fermi Atomic Power Plant	2	1985	2025	1,093	BWR	GE	NDCT	Lake Erie	837	At edge of lake
James A. FitzPatrick Nuclear Power Plant	--	1974	2014	816	BWR	GE	OT	Lake Ontario	353	From lake
Fort Calhoun Station	1	1973	2013	478	PWR	CE	OT	Missouri River	360	At shore
Robert Emmett Ginna Nuclear Power Plant	1	1969	2009	470	PWR	WEST	OT	Lake Ontario	356	Lake bottom
Grand Gulf Nuclear Station	1	1984	2024	1,250	BWR	GE	NDCT	Mississippi River	572	Collector wells
Haddam Neck (Connecticut Yankee)	--	1967	2007	582	PWR	WEST	OT	Connecticut River	372	Shoreline
Shearon Harris Nuclear Power Plant	1	1987	2027	900	PWR	WEST	NDCT	Buckhorn Creek	483	Reservoir on creek
Edwin I. Hatch	1 2	1974 1978	2014 2018	776 784	BWR BWR	GE GE	MDCT	Altamaha River	556	Edge of river

Nuclear Plant										
Hope Creek Generating Station	1	1986	2026	1,067	BWR	GE	NDCT	Delaware River	552	Edge of river
Indian Point Station	2 3	1973 1976	2013 2016	873 965	PWR PWR	WEST WEST	OT	Hudson River	840	At river bank
Kewaunee Nuclear Power Plant	--	1973	2013	535	PWR	WEST	OT	Lake Michigan	420	1,750 ft from shore
La Salle County Station	1 2	1982 1984	2022 2024	1,078 1,078	BWR BWR	GE GE	Cooling pond	Illinois River	645	From cooling pond
Limerick Generating Station	1 2	1985 1990	2025 2030	1,055 1,055	BWR BWR	GE GE	NDCT NDCT	Schuylkill River	450	From river
Maine Yankee Atomic Plant	--	1973	2013	825	PWR	CE	OT	Back River	426	River bank
William B. McGuire Nuclear Station	1 2	1981 1983	2021 2023	1,180 1,180	PWR PWR	WEST WEST	OT	Lake Norman	675	Submerged and surface at shoreline
Millstone Nuclear Power Plant	1 2 3	1970 1975 1986	2010 2015 2026	660 870 1,154	BWR PWR PWR	GE CE WEST	OT OT OT	Long Island Sound	420 523 907	Niantic Bay
Monticello Nuclear Generating Plant	--	1970	2010	545	BWR	GE	OT with towers	Mississippi River	280	Canal
North Anna Power Station	1 2	1978 1980	2018 2020	907 907	PWR PWR	WEST WEST	OT	Lake Anna	940	Lake shore
Nine Mile Point Nuclear Station	1 2	1968 1987	2008 2027	620 1,080	BWR BWR	GE GE	OT NDCT	Lake Ontario	250 580	Pipelines 1,000 ft off shore
Oconee Nuclear Station	1 2 3	1973 1973 1974	2013 2013 2014	887 887 887	PWR PWR PWR	B&W B&W B&W	OT	Lake Keowee	680	710-ft deepskimmer wall
Oyster Creek Generating Station	1	1969	2009	650	BWR	GE	OT	Barnegat Bay	460	Forked River from bay
Palisades Nuclear Plant	1	1972	2012	805	PWR	CE	MDCT	Lake Michigan	405	Crib 3,300 ft from shore

Palo Verde Generating Station	1 2 3	1985 1986 1987	2025 2026 2027	1,270 1,270 1,270	PWR PWR PWR	CE CE CE	MDCT	Phoenix City Sewage Treatment Plant	560	35-mile pipe
Peach Bottom Atomic Power Station	2 3	1973 1974	2013 2014	1,065 1,065	BWR BWR	GE GE	OT with towers	Conowingo Pond	750	Small intake pond
Perry Nuclear Power Station	1	1986	2026	1,205	BWR	GE	NDCT	Lake Erie	545	Multiport 2,250 ft off shore
Pilgrim Nuclear Power Station	1	1972	2012	655	BWR	GE	OT	Cape Cod Bay	311	Edge of bay
Point Beach Nuclear Plant	1 2	1970 1972	2010 2012	497 497	PWR PWR	WEST WEST	OT	Lake Michigan	350	1,750 ft from shore
Prairie Island Nuclear Generating Plant	1 2	1973 1974	2013 2014	530 530	PWR PWR	WEST WEST	MDCT or OT	Mississippi River	294	Short canal
Quad-Cities Station	1 2	1972 1972	2012 2012	789 789	BWR BWR	GE GE	OT	Mississippi River	471	Edge of river
Rancho Seco Nuclear Station	1	1974	2014	918	PWR	B&W	NDCT	Folsom Canal	446	3.5-mile pipe
River Bend Station	1	1985	2025	936	BWR	GE	MDCT	Mississippi River	508	At river bank
H. B. Robinson Plant	2	1970	2010	700	PWR	WEST	OT	Lake Robinson	482	Edge of lake
Salem Nuclear Generating Station	1 2	1976 1981	2016 2021	1,115 1,115	PWR PWR	WEST WEST	OT	Delaware River	1,100	Edge of river
San Onofre Nuclear Generating Station	1 2 3	1967 1982 1983	2007 2022 2023	436 1,070 1,080	PWR PWR PWR	WEST CE CE	OT	Pacific Ocean	341 797 797	3,200 to 3,400 ft off shore
Seabrook Station	1	1990	2032	1,198	PWR	WEST	OT	Atlantic Ocean	399	7,000 ft off shore
Sequoyah Nuclear Plant	1 2	1980 1981	2020 2021	1,148 1,148	PWR PWR	WEST WEST	OT and/or NDCT	Chickamauga Lake	522	From lake

Shoreham Nuclear Power Station	--	--	----	819	BWR	GE	OT	Long Island Sound	574	Intake canal
South Texas Project	1 2	1988 1989	2028 2029	1,250 1,250	PWR PWR	WEST WEST	CCCP	Colorado River	907	Bank of river
St. Lucie Plant	1 2	1976 1983	2016 2023	830 830	PWR PWR	CE CE	OT	Atlantic Ocean	491	1,200 ft off shore
Virgil C. Summer Nuclear Station	1	1982	2022	900	PWR	WEST	OT	Lake Monticello	485	Intake at shoreline
Surry Power Station	1 2	1972 1973	2012 2013	788 788	PWR PWR	WEST WEST	OT	James River	840	1.7-mile canal
Susquehanna Steam Electric Station	1 2	1982 1984	2022 2024	1,050 1,050	BWR BWR	GE GE	NDCT	Susquehanna River	448	River bank
Three Mile Island Nuclear Station	1	1974	2014	819	PWR	B&W	NDCT	Susquehanna River	430	At river bank
Trojan Nuclear Plant	1	1975	2015	1,130	PWR	WEST	NDCT	Columbia River	429	At river bank
Turkey Point Plant	3 4	1972 1973	2012 2013	693 693	PWR PWR	WEST WEST	Closed-cyclecanal	Biscane Bay	624	Intake canal and barge canal
Vermont Yankee Nuclear Power Station	1	1973	2013	540	BWR	GE	OT and towers	Connecticut River	366	Edge of river
Vogtle Electric Generating Plant	1 2	1987 1989	2027 2029	1,101 1,160	PWR PWR	WEST WEST	NDCT	Savannah River	510	At river bank
Waterford Steam Electric Station	3	1985	2025	1,104	PWR	CE	OT	Mississippi River	975	At river bank
Watts Bar Nuclear Plant	1 2	-- --	-- --	1,170 1,170	PWR PWR	WEST WEST	NDCT NDCT	Chickamauga Lake	410	At lake bank
Washington Nuclear Project (WNP)	2	1984	2024	1,100	BWR	GE	MDCT	Columbia River	550	Offshore

Wolf Creek Generation Station	1	1985	2025	1,170	PWR	WEST	CCCP	Wolf Creek	500	Cooling lake
Yankee Nuclear Power Station	1	1960	2000	175	PWR	WEST	OT	Deerfield River	140	Sherman Pond, 90 ft below surface
Zion Nuclear Plant	1 2	1973 1973	2013 2013	1,040 1,040	PWR PWR	WEST WEST	OT OT	Lake Michigan	735	2600 ft off shore

[a]PWR = pressurized-water reactor; BWR = boiling-water reactor.

[b]B-W = Babcock and Wilcox; GE = General Electric; WEST = Westinghouse; C-E = Combustion-Engineering.

[c]OT = once through; NDCT = natural draft cooling tower; MDCT = mechanical draft cooling tower; CCCP = closed cycle cooling pond, lake, or reservoir.

Figure 2.1 Pressurized-water-reactor power generation system.

Figure 2.2 Boiling-water-reactor generating system.

In the PWR, reactor heat is transferred from the primary coolant to a secondary coolant loop that is at a lower pressure, allowing steam to be generated in the steam generator. The steam then flows to a turbine for power production. In contrast, the BWR generates steam directly within the reactor core, which passes through moisture separators and steam dryers and then flows to the turbine.

All domestic power reactors employ a containment structure as a major safety feature to prevent the release of radionuclides in the event of an accident. PWRs employ three types of containments: (1) large, dry containments; (2) subatmospheric containments; and (3) ice condenser containments. Of the 80 U.S. PWRs, 65 have large, dry containments; 7 have subatmospheric containments; and 8 have ice condenser containments. BWR containments typically are composed of a suppression pool and dry well. Three types of BWR containments (Mark I, Mark II, and Mark III) have evolved. There are 24 Mark I, 10 Mark II, and 4 Mark III containment designs in the United States.

NUREG/CR-5640 provides a comprehensive overview and description of U.S. commercial nuclear power plant systems.

2.2.3 Cooling and Auxiliary Water Systems

The predominant water use at a nuclear power plant is for removing excess heat generated in the reactor by condenser cooling. The quantity of water used for condenser cooling is a function of several factors, including the capacity rating of the plant and the increase in cooling water temperature from the intake to the discharge. The larger the plant, the greater the quantity of waste heat to be dissipated, and the greater the quantity of cooling water required.

In addition to removing heat from the reactor, cooling water is also provided to the service water system and to the auxiliary cooling water system. The volume of water required for these systems for once-through cooling is usually less than 15 percent of the volume required for condenser cooling. In closed-cycle cooling, the additional water needed is usually less than 5 percent of that needed for condenser cooling.

Of the 118 nuclear reactors, 48 use closed-cycle cooling systems (see Table 2.2, which groups the 74 plant sites into three broad categories according to environment). Most closed-cycle systems use cooling towers. Some closed-cycle system units use a cooling lake or canals for transferring heat to the atmosphere. Once-through cooling systems are

used at 70 units. A few of these systems are augmented with helper cooling towers to reduce the temperature of the effluent released to the adjacent body of water.

In closed-cycle systems, the cooling water is recirculated through the condenser after the waste heat is removed by dissipation to the atmosphere, usually by circulating the water through large cooling towers constructed for that purpose. Several types of closed-cycle cooling systems are currently used by the nuclear power industry. Recirculating cooling systems consist of either natural draft or mechanical draft cooling towers, cooling ponds, cooling lakes, or cooling canals. Because the predominant cooling mechanism associated with closed-cycle systems is evaporation, most of the water used for cooling is consumed and is not returned to a water source.

Table 2.2 Types of cooling systems used at nuclear power sites

Plant site	State	Cooling system[a]
Coastal or estuarine environment		
Diablo Canyon Nuclear Power Plant	California	Once through
San Onofre Nuclear Generating Station	California	Once through
Millstone Nuclear Power Plant	Connecticut	Once through
Crystal River Nuclear Plant	Florida	Once through
St. Lucie Plant	Florida	Once through
Turkey Point Plant	Florida	Cooling canal
Maine Yankee Atomic River Plant	Maine	Once through
Calvert Cliffs Nuclear Power Plant	Maryland	Once through
Pilgrim Nuclear Power Plant	Massachusetts	Once through
Seabrook Station	New Hampshire	Once through
Hope Creek Generating Station	New Jersey	Towers (natural draft)
Oyster Creek Generating Station	New Jersey	Once through
Salem Nuclear Generating Station	New Jersey	Once through
Indian Point Station	New York	Once through
Shoreham Nuclear Power Station	New York	Once through
Brunswick Steam Electric Plant	North Carolina	Once through
South Texas Project	Texas	Cooling pond
Surry Power Station	Virginia	Once through
Great Lakes shoreline environment		
Zion Nuclear Plant	Illinois	Once through
Big Rock Point Nuclear Plant	Michigan	Once through
Donald C. Cook Nuclear Power Plant	Michigan	Once through
Enrico Fermi Atomic Power Plant	Michigan	Towers (natural draft) and pond
Palisades Nuclear Plant	Michigan	Towers (mechanical draft)
James A. FitzPatrick Nuclear Power Plant	New York	Once through
Robert Emmett Ginna Nuclear Power Plant	New York	Once through
Nine Mile Point Nuclear Station	New York	Once through and towers
Davis-Besse Nuclear Power Station	Ohio	Towers (natural draft)
Perry Nuclear Power Station	Ohio	Towers (natural draft)
Kewaunee Nuclear Power Plant	Wisconsin	Once through
Point Beach Nuclear Plant	Wisconsin	Once through
Freshwater riverine or impoundment environment		
Bellefonte Nuclear Plant	Alabama	Towers (natural draft)
Browns Ferry Nuclear Power Plant	Alabama	Once through and helper towers
Joseph M. Farley Nuclear Plant	Alabama	Towers (mechanical draft)
Palo Verde Generating Station	Arizona	Towers (mechanical draft)

Arkansas Nuclear One	Arkansas	Once through and towers
Rancho Seco Nuclear Station	California	Towers (natural draft)
Haddam Neck Plant (Connecticut Yankee)	Connecticut	Once through
Edwin I. Hatch Nuclear Plant	Georgia	Towers (mechanical draft)
Vogtle Electric Generating Plant	Georgia	Towers (natural draft)
Braidwood Station	Illinois	Cooling pond
Byron Station	Illinois	Towers (natural draft)
Clinton Power Station	Illinois	Cooling pond
Dresden Nuclear Power Station	Illinois	Spray canal and cooling pond
La Salle Country Station	Illinois	Cooling pond
Quad Cities Station	Illinois	Once through
Duane Arnold Energy Center	Iowa	Towers (mechanical draft)
Wolf Creek Generation Station	Kansas	Cooling pond
River Bend Station	Louisiana	Towers (mechanical draft)
Waterford Steam Electric Station	Louisiana	Once through
Yankee Nuclear Power Station	Massachusetts	Once through
Monticello Nuclear Generating Plant	Minnesota	Variable (mechanical draft)
Prairie Island Nuclear Generating Plant	Minnesota	Variable (mechanical draft)
Grand Gulf Nuclear Station	Mississippi	Towers (natural draft)
Callaway Plant	Missouri	Towers (natural draft)
Cooper Nuclear Station	Nebraska	Once through
Fort Calhoun Station	Nebraska	Once through
Shearon Harris Nuclear Power Plant	North Carolina	Towers (natural draft)
William B. McGuire Nuclear Station	North Carolina	Once through
Trojan Nuclear Plant	Oregon	Towers (natural draft)
Beaver Valley	Pennsylvania	Variable (natural draft)
Limerick Generating Station	Pennsylvania	Towers (natural draft)
Peach Bottom Atomic Power Station	Pennsylvania	Once through and towers (mechanical draft)
Susquehanna Steam Plant Station	Pennsylvania	Towers (natural draft)
Three Mile Island Nuclear Station	Pennsylvania	Towers (natural draft)
Catawba Nuclear Station	South Carolina	Towers (mechanical draft)
Oconee Nuclear Station	South Carolina	Once through
H. B. Robinson Plant	South Carolina	Cooling pond
Virgil C. Summer Nuclear Station	South Carolina	Cooling pond
Sequoyah Nuclear Plant	Tennessee	Variable (natural draft)
Watts Bar Nuclear Plant	Tennessee	Towers (natural draft)
Comanche Peak	Texas	Once through
Vermont Yankee Nuclear Power Station	Vermont	Once through and helper towers
North Anna Power Station	Virginia	Once through
Washington Nuclear Project-2	Washington	Towers (mechanical draft)

[a] Of the 48 plants with closed-cycle cooling systems, 15 use mechanical draft cooling towers, 25 use natural draft cooling towers, 4 use a canal system, and 4 use a cooling lake. Of the 70 plants with once-through cooling systems, 24 discharge to a river, 11 discharge to the Great Lakes, 19 discharge to the ocean or an estuary, and 16 discharge to a reservoir or lake. Five of the once-through plants can also switch to cooling towers.

In a once-through cooling system, circulating water for condenser cooling is drawn from an adjacent body of water, such as a lake or river, passed through the condenser tubes, and returned at a higher temperature to the adjacent body of

water. The waste heat is dissipated to the atmosphere mainly by evaporation from the water body and, to a much smaller extent, by conduction, convection, and thermal radiation loss.

All sites with two or three reactors use the same cooling system for all reactors, except for two sites: Arkansas Nuclear One in Arkansas and Nine Mile Point in New York. These two sites use once-through cooling for one unit and closed-cycle for the other.

For both once-through and closed-cycle cooling systems, the water intake and discharge structures are of various configurations to accommodate the source water body and to minimize impact to the aquatic ecosystem. The intake structures are generally located along the shoreline of the body of water and are equipped with fish protection devices (ORNL/TM-6472). The discharge structures are generally of the jet or diffuser outfall type and are designed to promote rapid mixing of the effluent stream with the receiving body of water. Biocides and other chemicals used for corrosion control and for other water treatment purposes are mixed with the condenser cooling water and discharged from the system.

In addition to surface water sources, some nuclear power plants use groundwater as a source for service water, makeup water, or potable water. Other plants operate dewatering systems to intentionally lower the groundwater table, either by pumping or by using a system of drains, in the vicinity of building foundations.

2.2.4 Radioactive Waste Treatment Systems

During the fission process, a large inventory of radioactive fission products builds up within the fuel. Virtually all of the fission products are contained within the fuel pellets. The fuel pellets are enclosed in hollow metal rods (cladding), which are hermetically sealed to further prevent the release of fission products. However, a small fraction of the fission products escapes the fuel rods and contaminates the reactor coolant. The primary system coolant also has radioactive contaminants as a result of neutron activation. The radioactivity in the reactor coolant is the source of gaseous, liquid, and solid radioactive wastes at LWRs.

The following sections describe the basic design and operation of PWR and BWR radioactive-waste-treatment systems.

2.2.4.1 Gaseous Radioactive Waste

For BWRs, the sources of routine radioactive gaseous emissions to the atmosphere are the air ejector, which removes noncondensable gases from the coolant to improve power conversion efficiency, and gaseous and vapor leakages, which, after monitoring and filtering, are discharged to the atmosphere via the building ventilation systems.

The off-gas treatment system collects noncondensable gases and vapors that are exhausted at the condenser via the air ejectors. These off-gases are processed through a series of delay systems and filters to remove airborne radioactive particulates and halogens, thereby minimizing the quantities of the radionuclides that might be released. Building ventilation system exhausts are another source of gaseous radioactive wastes for BWRs.

PWRs have three primary sources of gaseous radioactive emissions:

- discharges from the gaseous waste management system;
- discharges associated with the exhaust of noncondensable gases at the main condenser if a primary-to-secondary system leak exists; and
- radioactive gaseous discharges from the building ventilation exhaust, including the reactor building, reactor auxiliary building, and fuel-handling building.

The gaseous waste management system collects fission products, mainly noble gases, that accumulate in the primary coolant. A small portion of the primary coolant flow is continually diverted to the primary coolant purification, volume, and chemical control system to remove contaminants and adjust the coolant chemistry and volume. During this process, noncondensable gases are stripped and routed to the gaseous waste management system, which consists of a series of gas storage tanks. The storage tanks allow the short-half-life radioactive gases to decay, leaving only relatively small

quantities of long-half-life radionuclides to be released to the atmosphere. Some PWRs are using charcoal delay systems rather than gas storage tanks (e.g., Seabrook).

2.2.4.2 Liquid Radioactive Waste

Radionuclide contaminants in the primary coolant are the source of liquid radioactive waste in LWRs. The specific sources of these wastes, the modes of collection and treatment, and the types and quantities of liquid radioactive wastes released to the environment are in many respects similar in BWRs and PWRs. Accordingly, the following discussion applies to both BWRs and PWRs, with distinctions made only where important differences exist.

Liquid wastes resulting from LWR operation may be placed into the following categories: clean wastes, dirty wastes, detergent wastes, turbine building floor-drain water, and steam generator blowdown (PWRs only). *Clean wastes* include all liquid wastes with a normally low conductivity and variable radioactivity content. They consist of reactor grade water, which is amenable to processing for reuse as reactor coolant makeup water. Clean wastes are collected from equipment leaks and drains, certain valve and pump seal leaks not collected in the reactor coolant drain tank, and other aerated leakage sources. These wastes also include primary coolant. *Dirty wastes* include all liquid wastes with a moderate conductivity and variable radioactivity content that, after processing, may be used as reactor coolant makeup water. Dirty wastes consist of liquid wastes collected in the containment building sump, auxiliary building sumps and drains, laboratory drains, sample station drains, and other miscellaneous floor drains. *Detergent wastes* consist principally of laundry wastes and personnel and equipment decontamination wastes and normally have a low radioactivity content. *Turbine building floor-drain wastes* usually have high conductivity and low radionuclide content. In PWRs, *steam generator blowdown* can have relatively high concentrations of radionuclides depending on the amount of primary-to-secondary leakage. Following processing, the water may be reused or discharged.

Each of these sources of liquid wastes receives varying degrees and types of treatment before storage for reuse or discharge to the environment under the site National Pollutant Discharge Elimination System (NPDES) permit. The extent and types of treatment depend on the chemical and radionuclide content of the waste; to increase the efficiency of waste processing, wastes of similar characteristics are batched before treatment.

The degree of processing, storing, and recycling of liquid radioactive waste has steadily increased among operating plants. For example, extensive recycling of steam generator blowdown in PWRs is now the typical mode of operation, and secondary side wastewater is routinely treated. In addition, the plant systems used to process wastes are often augmented with the use of commercial mobile processing systems. As a result, radionuclide releases in liquid effluent from LWRs have generally declined or remained the same.

2.2.4.3 Solid Radioactive Waste

Solid low-level radioactive waste (LLW) from nuclear power plants is generated by removal of radionuclides from liquid waste streams, filtration of airborne gaseous emissions, and removal of contaminated material from various reactor areas. Liquid contaminated with radionuclides comes from primary and secondary coolant systems, spent-fuel pools, decontaminated wastewater, and laboratory operations. Concentrated liquids, filter sludges, waste oils, and other liquid sources are segregated by type, flushed to storage tanks, stabilized for packaging in a solid form by dewatering, slurried into 55-gal steel drums, and stored on-site in shielded Butler-style buildings or other facilities until suitable for off-site disposal (NUREG/CR-2907). These buildings usually contain volume reduction facilities to reduce the volume of LLW requiring off-site disposal (EPRI NP-5526-V1).

High-efficiency particulate filters are used to remove radioactive material from gaseous plant effluents. These filters are compacted in volume reduction facilities that have volume reduction equipment and are disposed of as solid wastes.

Solid LLW consists of contaminated protective clothing, paper, rags, glassware, compactible and noncompactible trash, and non-fuel-irradiated reactor components and equipment. Most of this waste comes from plant modifications and routine maintenance activities. Additional sources include tools and other material exposed to the reactor environment

(EPRI-NP-5526-V1; EPRI NP-5526-V2). Before disposal, compactible trash is usually taken to on- or off-site VR facilities. Compacted dry active waste is the largest single form of LLW disposed from nuclear plants, comprising one-half and one-third of total average annual volumes from PWRs and BWRs, respectively (EPRI NP-5526V1).

Volume reduction efforts have been undertaken in response to increased disposal costs and the passage of the 1980 Low Level Radioactive Waste Policy Act and the 1985 Low Level Radioactive Waste Policy Amendments Act (LLRWPAA) (Pub. L. 96-573; Pub. L. 99-240), which require LLW disposal allocation systems for nuclear plants (see Section 6.3). Volume reduction is performed both on- and off-site. The most common on-site volume reduction techniques are high-pressure compacting of waste drums, dewatering and evaporating wet wastes, monitoring waste streams to segregate wastes, minimizing the exposure of routine equipment to contamination, and decontaminating and sorting radioactive or nonradioactive batches before off-site shipment. Off-site waste management vendors compact compactible wastes at ultra-high pressure (supercompaction); incinerate dry active waste; separate and incinerate oily, organic wastes; solidify the ash; and occasionally undertake waste crystallization and asphalt solidification of resins and sludges (EPRI NP-6163; EPRI NP-5526-V1; EPRI NP-5526-V2; DOE/RW-0220).

Spent fuel contains fission products and actinides produced when nuclear fuel is irradiated in reactors, as well as any unburned, unfissioned nuclear fuel remaining after the fuel rods have been removed from the reactor core. After spent fuel is removed from reactors, it is stored in racks placed in storage pools to isolate it from the environment. Delays in siting an interim monitored retrievable storage (MRS) facility or permanent repository, coupled with rapidly filling spent-fuel pools, have led utilities to seek other storage solutions, including expansion of existing pools, aboveground dry storage, longer fuel burnup, and shipment of spent fuel to other plants (Gerstberger 1987; DOE RW-0220).

Pool storage has been increased through (1) enlarging the capacity of spent-fuel racks, (2) adding racks to existing pool arrays ("dense-racking"), (3) reconfiguring spent fuel with neutron-absorbing racks, and (4) employing double-tiered storage (installing a second tier of racks above those on the pool floor).

Efforts are under way to develop dry storage technologies; these ude casks, silos, dry wells, and vaults (DOE December 1989). Dry storage facilities are simpler and more readily maintained than fuel pools. They are growing in favor because they offer a more stable means of storage and require relatively little land area (less than 0.2 ha--half an acre in most cases) (Johnson 1989). Dry storage is currently in use at about 5 percent of the sites.

2.2.4.4 Transportation of Radioactive Materials

There are four types of radioactive material shipments to and from nuclear plants: (1) routine and refurbishment-generated LLW transported from plants to disposal facilities, (2) routine LLW shipped to off-site facilities for volume reduction, (3) nuclear fuel shipments from fuel fabrication facilities to plants for loading into reactors (generally occurring on a 12- to 18-month cycle), and (4) spent-fuel shipments to other nuclear power plants with available storage space (an infrequent occurrence usually limited to plants owned by the same utility).

Workers and others are protected from exposure during radioactive material transport by the waste packaging. Operational restrictions on transport vehicles, ambient radiation monitoring, imposition of licensing standards (which ensure proper waste certification by testing and analysis of packages), waste solidification, and training of emergency personnel to respond to mishaps are also used (NUREG-0170; O'Sullivan 1988). Additional regulations may be imposed by states and communities along transportation corridors (Pub. L. 93-633; OTA-SET-304).

A typical PWR makes approximately 44 shipments of LLW per year; an average BWR makes 104 shipments per year (EPRI NP-5983). Most of this LLW is Class A waste packaged in 55-gal drums or other "Type A" containers and shipped to disposal facilities on flatbed trucks (DOE August 1989). (A "Type A" container permits no release of radioactive material under normal transportation conditions and must maintain sufficient shielding to limit radiation exposure to handling personnel). LLW shipments require manifests that describe the contents of the packages to permit

inspection by state, local, and facility personnel and to ensure that the waste is suitable for a particular disposal facility (NUREG-0945).

Currently, the only spent-fuel shipments from nuclear plants are to other plants. A few spent-fuel shipments have, in the past, been made to fuel reprocessing plants. These shipments are packaged in "Type B" casks designed to retain the highly radioactive contents under normal and accident conditions. These containers range in size from 23-36 metric tons (25-40 tons) for truck shipment (each cask is capable of holding seven fuel assemblies) to 109 metric tons (120 tons) for rail transport (with a capacity for 36 assemblies) (DOE/RW-0065). The casks are resistant to both small-arms fire and high-explosive detonation (NUREG-0170).

2.2.5 Nonradioactive Waste Systems

Nonradioactive wastes from nuclear power plants include boiler blowdown (continual or periodic purging of impurities from plant boilers), water treatment wastes (sludges and high saline streams whose residues are disposed of as solid waste and biocides), boiler metal cleaning wastes, floor and yard drains, and stormwater runoff. Principal chemical and biocide waste sources include the following:

- Boric acid used to control reactor power and lithium hydroxide used to control pH in the coolant. (These chemicals could be inadvertently released because of pipe or steam generator leakage.)
- Sulfuric acid, which is added to the circulating water system to control scale.
- Hydrazine, which is used for corrosion control. (It is released in steam generator blowdown.)
- Sodium hydroxide and sulfuric acid, which are used to regenerate resins. (These are discharged after neutralization.)
- Phosphate in cleaning solutions.
- Biocides used for condenser defouling.

Other small volumes of wastewater are released from other plant systems depending on the design of each plant. These are discharged from such sources as the service water and auxiliary cooling systems, water treatment plant, laboratory and sampling wastes, boiler blowdown, floor drains, stormwater runoff, and metal treatment wastes. These waste streams are discharged as separate point sources or are combined with the cooling water discharges.

2.2.6 Nuclear Power Plant Operation and Maintenance

Nuclear power reactors are capable of generating electricity continuously for long periods of time. However, they operate neither at maximum capacity nor continuously for the entire term of their license. Plants can typically operate continuously for periods of time ranging from 1 year to 18 months on a single fuel load. Scheduled and unscheduled maintenance outages and less than peak power generation resulting from diminished consumer demand, or operational decisions, have reduced the power output for the U.S. nuclear power industry as a whole to an average annual capacity of between 58 and 73 percent of the maximum capability for the years 1975 through 1993, inclusive (NUREG-1350, vol. 6).

Maintenance activities are routinely performed on systems and components to help ensure the safe and reliable operation of the plant. In addition, inspection, testing, and surveillance activities are conducted throughout the operational life of a nuclear power plant to maintain the current licensing basis of the plant and ensure compliance with federal, state, and local requirements regarding the environment and public safety.

Nuclear power plants must periodically discontinue the production of electricity for refueling, periodic in-service inspection (ISI), and scheduled maintenance. Refueling cycles occur approximately every 12 to 18 months. The duration of a refueling outage is typically on the order of 2 months. Enhanced or expanded inspection and surveillance activities are typically performed at 5- and 10-year intervals. These enhanced inspections are performed to comply with Nuclear Regulatory Commission (NRC) and/or industry standards or requirements such as the American Society of Mechanical Engineers Boiler and Pressure Vessel Code. Five-year ISIs are scheduled for the 5th, 15th, 25th, and 35th years of operation, and 10-year ISIs are performed in the 10th, 20th, and 30th years. Each of these outages typically

requires 2 to 4 months of down time for the plant. For economic reasons, many of these activities are conducted simultaneously (e.g., refueling activities typically coincide with the ISI and maintenance activities).

Many plants also undertake various major refurbishment activities during their operational lives. These activities are performed to ensure both that the plant can be operated safely and that the capacity and reliability of the plant remain at acceptable levels. Typical major refurbishments that have occurred in the past include replacing PWR steam generators, replacing BWR recirculation piping, and rebuilding main steam turbine stages. The need to perform major refurbishments is highly plant-specific and depends on factors such as design features, operational history, and construction and fabrication details. The plants may remain out of service for extended periods of time, ranging from a few months to more than a year, while these major refurbishments are accomplished. Outage durations vary considerably, depending on factors such as the scope of the repairs or modifications undertaken, the effectiveness of the outage planning, and the availability of replacement parts and components.

Each nuclear power plant is part of a utility system that may own several nuclear power plants, fossil-fired plants, or other means of generating electricity. An on-site staff is responsible for the actual operation of each plant, and an off-site staff may be headquartered at the plant site or some other location. Typically, from 800 to 2300 people are employed at nuclear power plant sites during periods of normal operation, depending on the number of operating reactors located at a particular site. The permanent on-site work force is usually in the range of 600 to 800 people per reactor unit. However, during outage periods, the on-site work force typically increases by 200 to 900 additional workers. The additional workers include engineering support staff, technicians, specialty craftspersons, and laborers called in both to perform specialized repairs, maintenance, tests, and inspections and to assist the permanent staff with the more routine activities carried out during plant outages.

2.2.7 Power-Transmission Systems

Power-transmission systems associated with nuclear power plants consist of switching stations (or substations) located on the plant site and transmission lines located primarily off-site. These systems are required to transfer power from the generating station to the utility's network of power lines in its service area.

Switching stations transfer power from generating sources to power lines and regulate the operation of the power system. Transformers in switching stations convert the generated voltage to voltage levels appropriate for the power lines. Equipment for regulating system operation includes switches, power circuit breakers, meters, relays, microwave communication equipment, capacitors, and a variety of other electrical equipment. This equipment meters and controls power flow; improves performance characteristics of the generated power; and protects generating equipment from short circuits, lightning strikes, and switching surges that may occur along the power lines. Switching stations occupy on-site areas generally two to four times as large as areas occupied by reactor and generator buildings, but are not as visible as the plant buildings.

The length of power transmission lines constructed for nuclear plants varies from a few miles for some plants to hundreds of miles for others. Power line systems include towers (structures), insulator strings, conductors, and ground wires strung between towers. Power lines associated with nuclear plants usually have voltages of 230 kV, 345 kV, 500 kV, or 765 kV (see Section 4.5.1). They operate at a low frequency of 60 Hz (60 cycles per second) compared with frequencies of 55-890 MHz for television transmitters and 1000 MHz and greater for microwaves.

Most power line towers are double wooden poles ("H-frame" structure) or metal lattice structures that support one or two sets of conductors (three conductors per set; see Section 4.5.1). Tower height, usually between 21 and 51 m (70 and 170 ft), increases with line voltage. Strings of insulators connect the conductors to the towers. The tops of the towers support two ground wires that transmit the energy of lightning strikes to the ground. Thus, the ground wires prevent lightning strikes to the conductors, minimize the occurrence of power system outages, and protect vital power system components that could be damaged by lightning-caused power surges on the conductors.

2.3 Plant Interaction with the Environment

This section describes how nuclear plants interact with the environment. Nuclear power plants are sited, designed, and operated to minimize impacts to the environment, including plant workers. Land that could be used for other purposes is dedicated to electric power production for the life of the plant. The aesthetics of the landscape are altered because of the new plant structures; the surface and groundwater hydrology and terrestrial and aquatic ecology may be affected; the air quality may be affected; and, finally, the community infrastructure and services are altered to accommodate the influx of workers into the area. The environmental impact from plant operation is determined largely by waste effluent streams (gaseous, liquid, and solid); the plant cooling systems; the exposure of plant workers to radiation; and plant expenditures, taxes, and jobs.

Operational activities associated with nuclear power plants, including maintenance actions, often produce liquid discharges that are released to the surrounding environment. The major liquid effluent occurs in once-through cooling systems which discharge heat and chemicals into a receiving body of water, but all nuclear power plants have liquid effluents to some extent. To operate, power plants must obtain an NPDES permit that specifies discharge standards and monitoring requirements, and they are required to be strictly in compliance with the limits set by the permit. NPDES permits are issued by the Environmental Protection Agency (EPA) or a designated state water quality agency. They must be renewed every 5 years.

Any gaseous effluents generated are similarly controlled by the EPA and state permitting agencies, which require compliance with the Clean Air Act and any amendments added by the states. On-site incineration of waste products is controlled in this manner.

2.3.1 Land Use

Nuclear power plants are large physical entities. Land requirements generally amount to several hundred hectares for the plant site, of which 20 to 40 ha (50 to 100 acres) may actually be disturbed during plant construction. Other land commitments can amount to many thousands of hectares for transmission line rights-of-way (ROWs) and cooling lakes, when such a cooling option is used.

Nuclear power plants that began initial operation after the promulgation of the National Environmental Policy Act of 1969 (Pub. L. 91-190) or the Endangered Species Act of 1973 (Pub. L. 93-205) are sited and operate in compliance with these laws. Any modifications to the plants after the effective dates of these acts must be in compliance with the requirements of these laws. The Endangered Species Act applies to both terrestrial and aquatic biota. The individual states may also have requirements regarding threatened and endangered species; the state-listed species may vary from those on the federal lists.

2.3.2 Water Use

Nuclear power plants withdraw large amounts of mainly surface water to meet a variety of plant needs (Section 2.2.3). Water withdrawal rates are large from adjacent bodies of water for plants with once-through cooling systems. Flow through the condenser for a 1,000-MW(e) plant may be 45 to 65 m^3/s (700,000 to 1,000,000 gal/min). Water lost by evaporation from the heated discharge is about 60 percent of that which is lost through cooling towers. Additional water needs for service water, auxiliary systems, and radioactive waste systems account for 1 to 15 percent of that needed for condenser cooling.

Water withdrawal from adjacent bodies of water for plants with closed-cycle cooling systems is 5 to 10 percent of that for plants with once-through cooling systems, with much of this water being used for makeup of water by evaporation. With once-through cooling systems, evaporative losses are about 40 percent less but occur externally in the adjacent body of water instead of in the closed-cycle system. The average makeup water withdrawals for several recently constructed plants having closed-cycle cooling, normalized to 1,000 MW(e), are about 0.9 to 1.1 m^3/s (14,000 to

18,000 gal/min). Variation results from cooling tower design, concentration factor of recirculated water, climate at the site, plant operating conditions, and other plant-specific factors.

Consumptive loss normalized to 1,000 MW(e) is about 0.7 m^3/s (11,200 gal/min), which is about 80 percent of the water volume taken in. Consumptive water losses remove surface water from other uses downstream. In those areas experiencing water availability problems, nuclear power plant consumption may conflict with other existing or potential closed-cycle uses (e.g., municipal and agricultural water withdrawals) and in-stream uses (e.g., adequate in-stream flows to protect aquatic biota, recreation, and riparian communities). The environmental impacts of consumptive water use are considered in Sections 4.2.1 and 4.2.2.

As discussed in Section 2.2.3, some nuclear power plants use groundwater as an additional source of water. The rate of usage varies greatly among users. Many plants use groundwater only for the potable water system and require less than 0.006 m^3/s (100 gal/min); however, withdrawals at other sites can range from 0.02 to 0.2 m^3/s (400 to 3000 gal/min). Impacts associated with groundwater use are discussed in Sections 4.2.2, 4.3.2, and 4.4.3.

Nuclear plant water usage must comply with state and local regulations. Most states require permits for surface water usage. Groundwater usage regulations vary considerably from state to state, and permits are typically required.

2.3.3 Water Quality

Water quality is impacted by the numerous nonradioactive liquid effluents discharged from nuclear power plants (Section 2.1.6). Discharges from the heat dissipation system account for the largest volumes of water and usually the greatest potential impacts to water quality and aquatic systems, although other systems may contribute heat and toxic chemical contaminants to the effluent. The relatively small volumes of water required for the service water and auxiliary cooling water systems do not generally raise concerns about thermal or chemical impacts to the receiving body of water. However, because effluents from these systems contain contaminants that could be toxic to aquatic biota, their concentrations are regulated under the power plant's NPDES discharge permit. The quality of groundwater may also be diminished by water from cooling ponds seeping into the underlying groundwater table.

Sewage wastes and cleaning solvents, including phosphate cleaning solutions, are treated as sanitary wastes. They are treated before release to the environment so that, after release, their environmental impacts are minimized. In cases where nonradioactive sanitary or other wastes cannot be processed by on-site water treatment systems, the wastes are collected by independent contractors and trucked to off-site treatment facilities. Water quality issues relate to the following: NPDES permit system for regulating low-volume wastewater, adequate wastewater treatment capacity to handle increased flow and loading associated with operational changes to the plant and discharges of wastes through emission of phosphates from utility laundries, suspended solids and coliforms from sewage treatment discharges, and other effluents that cause excessive biological oxygen demand.

Many power plants are periodically treated with biocidal chemicals (most commonly some form of chlorine) to control fouling and bacterial slimes. Discharge of these chemicals to the receiving body of water can have toxic effects on aquatic organisms. The biological and water quality impacts of discharges from the discharge systems are considered in Sections 4.2, 4.3, and 4.4.

Chlorine is used widely as a biocide at nuclear power plants and represents the largest potential source of chemically toxic release to the aquatic environment. Chlorine application as a cooling system biocide is typically by injection in one of several different forms, including chlorine gas or sodium hypochlorite. It may be injected at the intake or targeted at various points (such as the condensers) on an intermittent or continuous basis. Such treatments control certain pest organisms such as the Asiatic clam or the growth of bacterial or fungal slime (TVA 1978). The control of biological pests or growths is critical to maintaining optimum system performance and minimizing operating costs (EPRI CS-3748).

Because of the evolution of the guidelines pertaining to chlorine and changes in biocide technologies over the past 15 years, the potential for any adverse impacts of chlorine has been decreasing. Improvements in dechlorination

technologies are likely to significantly reduce the level of chlorine in the aquatic environment. Given the critical need for controlling biofouling in the cooling system, both alternative and chlorine treatment technologies are expected to keep pace with regulatory requirements.

All effluent discharges are regulated under the provisions of the Clean Water Act and the implementing effluent guidelines, limitations, and standards established by EPA and the states. Conditions of discharge for each plant are specified in its NPDES permit issued by the state or EPA.

2.3.4 Air Quality

Transmission lines have been associated with the production of minute amounts of ozone and oxides of nitrogen. These issues are associated with corona, the breakdown of air very near the high-voltage conductors. Corona is most noticeable for the higher-voltage lines and during foul weather. Through the years, line designs have been developed that greatly reduce corona effects.

The effluents created and released from the incineration of any waste products must comply with EPA and state requirements regarding air quality. Permits for release of controlled amounts of these effluents to the atmosphere are controlled by state permitting agencies. Because nuclear power plants generally do not produce gaseous effluents, the impact on air quality is minimal.

2.3.5 Aquatic Resources

Operation of the once-through (condenser cooling) system requires large amounts of water that are withdrawn directly from surface waters. These surface waters contain aquatic organisms that may be injured or killed through their interactions with the power plant. Aquatic organisms that are too large to pass through the intake debris screens, which commonly have a 1-cm (0.4-in.) mesh, and that cannot move away from the intake, may be impinged against the screens. If the organisms are held against the screen for long periods, they will suffocate; if they receive severe abrasions, they may die. Impingement can harm large numbers of fish and large invertebrates (e.g., crabs, shrimp, and jellyfish).

Aquatic organisms that are small enough to pass through the debris screens will travel through the entire condenser cooling system and be exposed to heat, mechanical, and pressure stresses, and possibly biocidal chemicals, before being discharged back to the body of water. This process, called entrainment, may affect a wide variety of small plants (phytoplankton), invertebrates (zooplankton), fish eggs, and larvae (ichthyoplankton). Entrainment mortality is variable. Conditions at some plants with once-through cooling may result in relatively low levels of mortality, although at such plants the volumes of water (and numbers of entrained organisms) are often high. On the other hand, generally no aquatic organisms survive at plants with closed-cycle cooling that recirculate water through cooling towers, although the volumes of water withdrawn are relatively low. Biological effects of entrainment and impingement are considered in Section 4.2.3.

Discharges from the plant heat rejection system may affect the receiving body of water through heat loading and chemical contaminants, most notably chlorine or other biocides. Heated effluents can kill aquatic organisms directly by either heat shock or cold shock. In addition, a number of indirect or sublethal stresses are associated with thermal discharges that have the potential to alter aquatic communities (e.g., increased incidence of disease, predation, or parasitism, as well as changes in dissolved gas concentrations).

As stated in Section 2.3.3, all effluent discharges are regulated by the Clean Water Act and standards established by the EPA and the individual states. Conditions of discharge for each plant are specified in the NPDES permit issued for that plant.

2.3.6 Terrestrial Resources

A number of ongoing issues associated with terrestrial resources can arise in the immediate area around the plant or its power transmission lines. Most power lines are located on easements (or ROWs) that the utility purchased from the landowner. Land uses on the easements are limited to activities compatible with power-line operation. In areas with

rapidly growing vegetation, utilities must periodically cut or spray the vegetation to prevent it from growing so close to the conductors that it causes short circuits and endangers power line operation. Other terrestrial resource issues can result from changes in local hydrology. Such changes can occur from altered contouring of the land, reduced tree cover, and increased paving. These changes can reduce the value of land and contribute to local erosion and flooding. Additional impacts can include the effects of cooling tower effluent drift, reduced habitat for plants and animals, disruption of animal transit routes, and bird collisions with cooling towers and transmission lines.

Each plant planning to apply for license renewal will need to consult with the appropriate agency administering the Endangered Species Act of 1973 about the presence of threatened or endangered species. Compliance with the Endangered Species Act will be a necessary part of each plant's environmental documentation at the time of license renewal.

2.3.7 Radiological Impacts

2.3.7.1 Occupational Exposures

Plant workers conducting activities involving radioactively contaminated systems or working in radiation areas can be exposed to radiation. Most of the occupational radiation dose to nuclear plant workers results from external radiation exposure rather than from internal exposure from inhaled or ingested radioactive materials. Experience has shown that the dose to nuclear plant workers varies from reactor to reactor and from year to year. Since the early 1980s, when NRC regulatory requirements and guidance placed increased emphasis on maintaining nuclear power plant occupational radiation exposures as low as reasonably achievable, there has been a decreasing trend in the average annual dose per nuclear plant worker.

The effect of plant refurbishment on occupational doses is evaluated in Sections 3.8.2 and in Appendix B. Similarly, the effect of continued operation associated with license renewal on occupational doses is evaluated in Section 4.6.3.

2.3.7.2 Public Radiation Exposures

Commercial nuclear power reactors, under controlled conditions, release small amounts of radioactive materials to the environment during normal operation. These releases result in radiation doses to humans that are small relative to doses from natural radioactivity. Nuclear power plant licensees must comply with NRC regulations (e.g., 10 CFR Part 20, Appendix I to 10 CFR Part 50, 10 CFR Part 50.36a, and 40 CFR Part 190) and conditions specified in the operating license.

Potential environmental pathways through which persons may be exposed to radiation originating in a nuclear power reactor include atmospheric and aquatic pathways. Radioactive materials released under controlled conditions include fission products and activation products. Fission product releases consist primarily of the noble gases and some of the more volatile materials like tritium, isotopes of iodine, and cesium. These materials are monitored carefully before release to determine whether the limits on releases can be met. Releases to the aquatic pathways are similarly monitored. Radioactive materials in the liquid effluents are processed in radioactive waste treatment systems (Section 2.2.4). The major radionuclides released to the aquatic systems are tritium, isotopes of cobalt, and cesium.

When an individual is exposed through one of these pathways, the dose is determined in part by the exposure time, and in part by the amount of time that the radioactivity inhaled or ingested is retained in the individual's body. The major exposure pathways include the following:

- inhalation of contaminated air,
- drinking milk or eating meat from animals that graze on open pasture on which radioactive contamination may be deposited,
- eating vegetables grown near the site, and
- drinking (untreated) water or eating fish caught near the point of discharge of liquid effluents.

Other less important exposure pathways include external irradiation from surface deposition; consumption of animals that drink irrigation water that may contain liquid effluents; consumption of crops grown near the site using irrigation water that may contain liquid effluents; shoreline, boating, and swimming activities; and direct off-site irradiation from radiation coming from the plant.

Radiation doses to the public are calculated in two ways. The first is for the maximally exposed person (that is, the real or hypothetical individual potentially subject to maximum exposure). The second is for average individual and population doses. Doses are calculated using site-specific data where available. For those cases in which site-specific data are not readily available, conservative (overestimating) assumptions are used to estimate doses to the public.

2.3.7.3 Solid Waste

Both nonradioactive and radioactive wastes are generated at nuclear power plants. The nonradioactive waste is generally not of concern unless it is classified as Resource Conservation and Recovery Act (RCRA) waste. All waste that is hazardous, that is, classified as RCRA waste, is packaged and disposed of in a licensed landfill consistent with the provisions of RCRA.

Hazardous chemicals, properly handled and controlled, do not present a major health risk to personnel at nuclear power plants, but they must be understood and treated carefully. Hazardous chemicals may be encountered in the work environment during adjustments to the chemistry of the primary and secondary coolant systems, during biocide application for fouling of heat removal equipment, during repair and replacement of equipment containing hazardous oils or other chemicals, in solvent cleaning, and in the repair of equipment. Exposures to hazardous chemicals are minimized by observing good industrial hygiene practices. Disposal of essentially all of the hazardous chemicals used at nuclear power plants is regulated by RCRA or NPDES permits.

Solid radioactive waste consists of LLW, mixed waste, and spent fuel. LLW is generated by removal of radionuclides from liquid waste streams, filtration of airborne gaseous emissions, and removal of contaminated material from the reactor environment.

Mixed waste is LLW that contains chemically hazardous components as defined under RCRA. Mixed waste consists primarily of decontamination wastes and ion exchange resins. The volume of mixed wastes produced at nuclear power plants is typically a small fraction of their overall waste stream, accounting for less than 3 percent by volume of the annual LLW discharged.

Spent fuel is produced during reactor operations. The buildup of fission products and actinides during normal operation prevents the continued use of the fuel assembly. Spent fuel is stored at the reactor site. Uncertainty exists as to when an MRS or permanent spent-fuel repository may become available. However, NRC has examined this issue and determined that licensees may, without significant impact on the environment, store spent fuel on-site for 80 years after ceasing reactor operation (55 FR 38474).

Four major considerations must be addressed when managing solid radioactive waste: (1) the adequacy of interim storage on-site in lieu of permanent off-site disposal, (2) transport of the radiological wastes to disposal sites over the nation's highways and railways, (3) worker and public radiation exposure resulting from handling and processing operations and transportation, and (4) final disposal.

LLW is normally temporarily stored on-site before being shipped to licensed LLW disposal facilities. Previously these facilities were at Barnwell, South Carolina; Beatty, Nevada; and Hanford, Washington. Under the Low Level Radioactive Waste Policy Act of 1980 and the LLRWPAA of 1985, states must secure their own disposal capacity for LLW generated within their boundaries after 1992 by forming waste compacts that are responsible for siting regional disposal facilities, or by siting their own disposal facilities.

For disposal purposes, mixed waste is principally regulated by NRC (10 CFR Part 61). Although the LLRWPAA of 1985 required states to certify they are capable of providing storage and disposal of mixed wastes in an NRC/EPA-

licensed facility by 1992, there are currently no licensed disposal facilities accepting commercially generated mixed waste. Because these facilities are not yet available, mixed waste is currently stored on-site.

Originally, disposal of spent fuel in a deep-geological repository was contemplated. However, because of delays in siting a permanent repository on the part of the Department of Energy and delays in developing an interim MRS facility, as required by the Nuclear Waste Policy Act of 1982, nuclear power plants are storing their spent fuel on-site.

LLW is compacted and packaged, typically in 55-gal drums, then transported via truck or railcar. The packaging and transportation of both LLW and mixed waste must comply with EPA requirements. NRC specifications for reviewing the environmental effects of the transport of spent fuel are contained in the Table S-4 Rule (54 FR 187; 10 CFR Part 51.52). States and communities along transportation corridors may impose additional restrictions on the transport of nuclear waste.

Workers receive radiation exposure during the storage and handling of radioactive waste and during the inspection of stored radioactive waste. However, this source of exposure is small compared with other sources of exposure at operating nuclear plants. Members of the general public are also exposed when the LLW is shipped to a disposal site. No other type of radioactive waste is currently being transported from the reactor sites. The public radiation exposures from radioactive material transportation have been addressed rically in Table S-4 of 10 CFR Part 51. Table S-4 indicates that the cumulative dose to the exposed public from the transport of both LLW and spent fuel is estimated to be about 0.03 person-sievert (3 person-rem) per reactor year.

2.3.8 Socioeconomic Factors

2.3.8.1 Work Force

Although the size of the work force varies considerably among U.S. nuclear power plants, the on-site staff responsible for operational activities generally consists of 600 to 800 personnel per reactor unit. The average permanent staff size at a nuclear power plant site ranges from 800 to 2400 people, depending on the number of operating reactors at the site. In rural or low population communities, this number of permanent jobs can provide employment for a substantial portion of the local work force. Table 2.3 depicts mean employment during normal operations in the 1975-1990 period, grouped by the number of reactors.

In addition to the work force needed for normal operations, many nonpermanent personnel are required for various tasks that occur during outages, for example, refueling outages, ISIs, or major refurbishments. Between 200 and 900 additional workers may be employed during these outages to perform the normal outage maintenance work. These are work force personnel who will be in the local community only a short time, but during these periods of extensive maintenance activities, the additional personnel will have a substantial effect on the locality. Table 2.4 indicates the levels of additional personnel typically required for different types of outages.

A substantial portion of the regular plant work force is normally involved in many of the efforts listed in Table 2.4, supplemented as needed by contractor personnel for support during specialized projects. Peak crew sizes are greatly affected by the specific requirements at each plant, utility decisions to make major repairs to systems and components to improve or sustain plant performance, and the relative phasing (schedule overlap) of these activities. Exact crew sizes can, therefore, vary widely from plant to plant.

2.3.8.2 Community

Typically, the immediate environment in which a nuclear power plant is located is rural, but the population density of the larger area surrounding the plant and the distance from a medium- or large-sized metropolitan center varies substantially across sites. Most sites, however, are not extremely remote [i.e., not more than about 30 km (20 miles) from a community of 25,000 or 80 km (50 miles) from a community of 100,000]. The significance of any given nuclear power plant to its host area will depend to a large degree on its location, with the effects generally being most

concentrated in those communities closest to the plant. Major influences on the local communities include the plant's effects on employment, taxes, housing, off-site land use, economic structure, and public services.

Table 2.3 Changes in mean operations-period employment at nuclear power plants over time

Operations period	One-unit plants[a]	Two-unit plants[a]	Three-unit plants[a]
Current[b]	832 (34)	1247 (28)	2404 (4)
1985-1989	841 (30)	1094 (26)	2095 (4)
1980-1984	447 (19)	946 (21)	1078 (3)
1975-1979	233 (17)	515 (16)	699 (3)

[a]Number in parentheses indicates number of plants providing data. [b]Approximately half the respondents reported data for 1989 and half for 1990.

Table 2.4 Mean additional employment per reactor unit associated with three outage types at nuclear power plants

Outage type[a]	Number of workers
Typical planned (58)	783
In-service inspection (23)	734
Largest single (45)	1148

[a]Number in parentheses indicates number of plants providing data for the survey (NUMARC).

As noted in Section 2.3.8.1, the average nuclear power plant directly employs 800 to 2400 people. Many hundreds of additional jobs are provided through plant subcontractors and service industries in the area. In rural communities, industries that provide this number of jobs at relatively high wages are major contributors to the local economy. In addition to the beneficial effect of the jobs that are created, local plant purchasing and worker spending can generate considerable income for local businesses.

Nuclear power plants represent an investment of several billion dollars. Such an asset on the tax rolls is extraordinary for rural communities and can constitute the major source of local revenues for small or remote taxing jurisdictions. Often, this revenue can allow local communities to provide higher quality and more extensive public services with lower tax rates. In general, capital expenditures and large changes in public services are seldom necessitated by the presence of the plant and its operating workers, particularly after local communities have adapted to greater and more dynamic changes experienced during plant construction.

As this discussion indicates, nuclear power plants can have a significant positive effect on their community environment. These effects are stable and long term. Because these socioeconomic effects generally enhance the economic structure of the local community, nuclear power plants are accepted by the community, and indeed, become a major positive contributor to the local environs.

2.4 License Renewal--The Proposed Federal Action

[**Prev** | **Next** | **Table of Contents**]

This section provides a brief overview of the most significant requirements of the proposed revision to 10 CFR Part 54, "Nuclear Power Plant License Renewal" (FR 59, no. 174, p. 46574).

Under the license renewal rule (10 CFR Part 54), nuclear power plant licensees would be allowed to operate their plants for a maximum of 20 years past the terms of their original 40-year operating licenses provided that certain requirements are met (Section 1.1). The rule requires licensees submitting license renewal applications to perform specified types of

evaluations and assessments of their facilities, and to provide sufficient information for the NRC to determine whether continued operation of the facility during the renewal term would endanger public safety or the environment.

License renewal will be based on ensuring plant compliance with its current licensing basis (i.e., the original plant licensing basis as amended during the initial license term). In addition, licensees will be required to demonstrate for certain important systems, structures, and components (SSCs) that the effects of aging will be managed in the renewal period in a manner so that the important functions of these SSCs will be maintained. The SSCs of concern in the renewal period are those which traditionally do not have readily monitorable performance or condition characteristics and include most passive, long-lived plant SSCs. Therefore, the NRC's license renewal rule requires a systematic review of, at least, passive, long-lived SSCs that support safety or other critical functions of a nuclear power plant (as delineated in the rule). To make these determinations regarding these SSCs, it is expected that licensees will implement aging management activities for SSCs for which current programs may not be adequate to ensure continued functionality in the renewal term. These aging management activities are expected to include surveillance, on-line monitoring, inspections, testing, trending, repair, refurbishment, replacement, and recordkeeping, as appropriate.

The license renewal rule seeks to ensure that the effects of aging in the period of extended operation are adequately managed. The rule allows credit for existing programs and regulatory requirements that continue to be applicable in the period of extended operation and that provide adequate management of the effects of aging for SSCs. This provision includes credit for rules or requirements, such as those incorporated in the maintenance rule, which could impact license renewal activities performed to detect and mitigate age-related functionality degradation.

The rule requires an integrated plant assessment (IPA). License renewal applicants must perform an IPA to determine which SSCs will be subject to additional review. The IPA would then determine whether additional programs, over and above the current operational and maintenance programs, are required to manage the effects of aging so that equipment function is maintained.

In addition, the license renewal rule requires licensees submitting an application for license renewal to provide the following:

- information noting any changes in the current licensing basis that occur during NRC's review of the submittal; and
- an evaluation of time-limited aging analyses (i.e., issues such as fatigue, equipment qualification, and reactor-vessel neutron embrittlement which have inherent time limits associated with them).

Key aspects of 10 CFR Part 54 could result in environmental impacts because of the requirements imposed. These key aspects are (1) the enhanced surveillance, on-line monitoring, inspections, testing, trending, and recordkeeping (SMITTR) on SSCs identified in the IPA and (2) the resulting actions taken to ensure that aging would be effectively managed and that the functionality of these SSCs would be maintained throughout the term that the new license would be in effect.

Note that the license renewal rule does not require any specific repairs, refurbishments, or modifications to nuclear facilities, but only that appropriate actions be taken to ensure the continued functionality of SSCs in the scope of the rule.

2.5 Baseline Environmental Impact Initiators Associated with Continued Operation of Nuclear Power Plants

[**Prev** | **Next** | **Table of Contents**]

The previous sections identified the various types of environmental impacts associated with current nuclear power plant operation. Before discussing incremental impacts associated with license renewal, it is useful to first establish a baseline from which to evaluate incremental effects. This baseline is provided by current experience with nuclear power plant operation and the related interactions with the environment. This section presents quantitative information

on selected environmental "impact initiators." The term "impact initiators" is defined, followed by estimates of the quantities of each initiator currently generated by typical nuclear power plant operation.

2.5.1 Definition of Environmental Impact Initiators

The terms "environmental impact initiators" and "impact initiators" as used here refer to the precursors to possible environmental impacts. For example, the incremental work force needed to accomplish license renewal activities is not an environmental impact, but the associated effects on housing, transportation, schools, etc., are environmental or socioeconomic impacts. The environmental impact initiators that need to be quantified to estimate overall environmental effects resulting from license renewal are as follows:

- Labor hours and work force size associated with on-site craft workers, engineering and administrative personnel, and health physics personnel are needed to estimate socioeconomic impacts to communities affected by personnel employed temporarily at nuclear plants.
- Labor costs are used to estimate both economic impacts to affected communities and economic viability of extended plant operation through license renewal.
- Occupational radiation exposure is used to estimate radiation-related impacts to workers.
- Capital costs of hardware, materials, and equipment are used both to estimate tax-base-related impacts to affected communities and to provide information related to the overall economics of license renewal.
- Radioactive waste types, volumes, and disposal costs are used to estimate environmental impacts related to the disposal of such wastes.

These impact initiators are the key elements expected to change, relative to current nuclear plant operation, as a result of actions taken to support license renewal. Other environmental considerations, including water usage, land usage, chemical usage/discharges, and air quality, are not anticipated to change significantly as a result of license renewal activities.

The impact initiators assessed--labor force, labor costs, capital costs, occupational radiation exposure, and radioactive waste volumes--help determine most of the potential changes in environmental impacts resulting from license renewal. For example, estimates of refurbishment labor and capital cost, together with a description of the types of refurbishment activities that might be undertaken, help define potential environmental impacts related to refurbishment period land use, water use, air quality, socioeconomics, nonradiological solid wastes, etc. The impact initiators assessed form a sufficient set from which to assess most license renewal-related environmental impacts. Also, the focus is on changes in impact initiators originating from plant activities, as opposed to changes in the plant environs or receptors (e.g., changes in the population affected by the plant).

2.5.2 Baseline Environmental Impact Initiator Estimates

The following discussions provide estimates of the baseline quantities for each of the foregoing impact initiators. These baseline quantities are typical of current nuclear plant operation.

2.5.2.1 Baseline Work Force Size and Expenditures for Labor

Table 2.3 indicates that the current work force at nuclear plant sites is typically in the range of 830 to 2400 permanent staff, depending on the number of operating reactors at a site. On-site personnel responsible for operational activities generally number between 600 and 800 per reactor unit. The average number of permanent staff per reactor unit is estimated to be about 700 people, and this number is approximately the same for both BWRs and PWRs. Assuming a normal 40-hour work week for most on-site staff, this staffing translates into an annual labor effort of about 1.5 million labor hours per unit. The permanent staff is augmented by temporary workers called in to assist with outage activities and special projects. The associated expenditures for labor, including an allowance of roughly 20 percent for temporary staff to support outages and special projects, is estimated to be about $77,000,000 annually per unit.

2.5.2.2 Baseline Capital Expenditures

Nuclear power plants incur expenditures for three major types of capital additions. There are (1) major plant retrofits needed to satisfy NRC requirements to ensure safe plant operation (e.g., changes required as a result of resolution of a generic safety issue), (2) major repairs needed to keep the plant operational (such as main turbine-generator repairs), and (3) discretionary activities undertaken to improve plant performance and labor productivity (DOE/EIA-0547). Expenditures for capital additions have varied widely from plant to plant and from one year to another. In 1989, the average expenditure for capital additions was about $24 per kilowatt, or roughly $24 million for a 1000-MW(e) plant (1989 dollars). These expenditures equate to about $28 million per year per 1000-MW(e) plant in 1994 dollars.

2.5.2.3 Baseline Occupational Radiation Exposure

Occupational radiation exposures vary considerably from plant to plant and from year to year at a given plant. The long -term trends indicate that overall worker exposure has been decreasing on a per-plant basis. The average occupational exposure for the year 1989 was roughly 4.4 person-sievert (440 person-rem) per plant at BWRs and about 3 person-sievert (300 person-rem) per plant at PWRs. For the years 1991 to 1993, the average exposure for all U.S. nuclear plants was about 2.5 person-sievert (250 person-rem) per plant (NUREG-1350, v.6). Significant deviations from these averages are routinely experienced, depending largely on whether a given plant had an outage during a given year and the nature and extent of refurbishment or repair activities undertaken during outages.

2.5.2.4 Baseline Radioactive Waste Generation

Section 2.2.4.3 discussed the different types of radioactive wastes typically generated at nuclear power plants. The type of waste generated in the greatest volumes is LLW. The volume of LLW disposed of annually has shown a decreasing trend over the past several years. Most recently, the amount of LLW disposed of at PWRs has been about 250 m^3/year (8800 ft^3/year); in contrast, the amount disposed of at BWRs has been about 560 m^3/year (19,700 ft^3/year).

Small volumes of mixed wastes are also generated by nuclear plant operation. However, any such waste that cannot be treated to eliminate the chemical hazards is currently stored on-site at the nuclear plants and not shipped for disposal.

U.S. reactors generate high-level wastes, primarily in the form of spent fuel. The quantities of spent fuel generated on a per-reactor-year basis is not expected to change with license renewal.

2.6 Environmental Impact Initiators Associated with License Renewal and Continued Operation

[**Prev** | **Next** | **Table of Contents**]

2.6.1 Scope and Objectives of Section 2.6

A major objective of the GEIS is to support the proposed changes to 10 CFR Part 51 by defining the issues that need to be addressed by the NRC and the applicants in plant-specific license renewal proceedings. First, the environmental issues are defined by characterizing and evaluating the actions and activities that may be undertaken by licensees in pursuit of license renewal and extended plant life. These actions and activities are then used to characterize their associated potential environmental impacts.

This section discusses potential actions nuclear power plant licensees may undertake to achieve license renewal and an extended plant life. This section also estimates the extent of the environmental initiators associated with these actions during license renewal and the extended term of operation.

The preceding section noted that the license renewal rule requires that the functionality of important SSCs be maintained throughout the period of the renewed license. To provide this assurance, licensees will likely undertake enhanced SMITTR activities on SSCs identified in the IPA and, based on the findings of these efforts, take appropriate action to ensure that aging is effectively managed and that the functionality of these SSCs is maintained. Incremental repair, refurbishment, and/or replacement of SSCs, as well as related changes to plant operations and maintenance, may be performed to ensure that this objective is achieved. These actions, either directly or indirectly, will produce

incremental impacts to the local environment. These incremental effects are over and above those expected if plants were simply to continue to operate as at present.

Licensees may also choose to undertake various refurbishment and upgrade activities at their nuclear facilities to better maintain or improve reliability, performance, and economics of power plant operation during the extended period of operation. These are activities which would be performed at the option of the licensee and which are in addition to those performed to satisfy the license renewal rule requirements.

The set of activities undertaken is expected to vary widely from plant to plant. Some plants may require little refurbishment and upgrading. Other plants may require considerable refurbishment and upgrading. For purposes of the GEIS, two types of license renewal programs were considered for which the environmental impact initiators were developed:

- a "typical" or "mid-stream" license renewal program, intended to be representative of the type of program that many plants seeking license renewal might implement, and
- a "conservative" or "bounding" program encompassing considerably more activities by licensees, intended to characterize an upper bound, or near upper bound, of the impacts that could be generated at a nuclear power plant.

Each program applies to both BWRs and PWRs. Thus, there are four separate cases or scenarios considered: a typical BWR, an upper bound or conservative BWR, a typical PWR, and a conservative PWR.

The typical scenarios can be used to estimate environmental impacts from an "average" license renewal program and to estimate the nationwide impacts of the total nuclear power plant population. The bounding license renewal scenarios, being much more conservative, are intended to address what might occur for those plants whose impacts will be considerably greater than is typical of the nuclear power reactor population as a whole.

Section 2.6.2 presents the bases and assumptions used in developing the different license renewal scenarios. Section 2.6.3 describes and characterizes the typical license renewal scenarios and the resulting environmental impact initiators. The conservative scenario program is described in Section 2.6.4.

2.6.2 Bases, Assumptions, and Approach

2.6.2.1 Structures, Systems, and Components of Interest

The SSCs of interest for assessing license renewal-related environmental impacts are those that are critical to the safe operation of the plant and that traditionally do not have readily monitorable performance characteristics, which means that the effects of aging may go undetected and lead to the loss of SSC functionality. Many structures and components in currently-licensed LWRs are subject to programs such as the maintenance rule, periodic surveillances, and periodic replacement and refurbishment and have readily monitorable performance or condition characteristics so that these programs can reveal the effects of aging in sufficient time to prevent loss of SSC functionality. However, many other nuclear plant components, such as passive, long-lived structures and components, may not be subject to programs which reveal the effects of aging in sufficient time to ensure their functionality. Therefore, these passive, long-lived structures and components are the items that may need new or incremental aging management activities. The SSCs used in the current evaluation are discussed in Sections 2.6.3.1 and 2.6.4.1 for the typical and conservative programs, respectively.

2.6.2.2 Definition of Candidate Aging Management Activities

A comprehensive list of possible license renewal-related activities with potential environmental impacts was developed. Emphasis was placed on defining those activities clearly associated with license renewal, that is, those activities which would not be included in a continuation or extrapolation of the activities that occurred during the

original licensing term. The types of activities considered ranged from enhanced inspection programs to component replacement. In turn, the potential environmental impacts of each identified activity were examined and analyzed.

Following the identification of candidate SSCs and the related aging management activities for each of the different license renewal programs, quantitative estimates of potential environmental impact initiators were developed. The estimates apply to a particular approach to aging management.

The data needed to characterize aging management activities were developed in the context of the four major license renewal programs previously identified: a typical BWR, a conservative BWR, a typical PWR, and a conservative PWR. Each program consisted of the following:

- lists of SSCs for which incremental activities would be performed to ensure that safe and economical operation could be achieved throughout the extended life of the plant;
- lists of the activities performed on each SSC to manage aging;
- the number of times each activity would be performed, accounting for repetitive actions on individual SSCs and the number of similar items in the plant subject to these activities; and
- the specific times during which each activity is performed.

The generic license renewal programs utilized in this evaluation were based on similar schedules for carrying out the selected aging management activities. Any major refurbishment work called for by the programs was assumed to start shortly after a renewed license had been granted. In these example programs, this would occur in roughly year 30 of the original 40-year license term. This work was assumed to be completed over several successive outages, including one at the end of the 40th year of plant operation. Incremental SMITTR actions, and the installation of enhanced or additional surveillance and monitoring equipment and systems, were also assumed to be initiated at this time. The SMITTR actions continue throughout the remaining life of the plants. This is true for both the typical and conservative case scenarios.

2.6.2.3 Incremental Effects Only

All aging management programs of interest to the current effort deliberately omit, to the extent possible, current practice as it has evolved and is expected to evolve in the license renewal period. The programs also exclude any changes in the basic design or technology of the plant. Rather, they include only those activities that would constitute a discrete change in the plant's operation and maintenance program and would be implemented only after issuance of the renewal license. In particular, all normal repair activities, as well as any activities undertaken to satisfy recently enacted requirements such as the Maintenance Rule, are considered to fall within the scope of current practice and were excluded from consideration. Therefore, the impact initiators considered here are incremental to those resulting from the extension of current practice.

2.6.2.4 Reference Plant Size and Characteristics

All assessments presented here reflect design features and quantities consistent with 1000-MW(e) plant designs. For the PWRs, the features and sizing chosen were consistent with those for a four-loop Westinghouse plant design with a large dry containment. The BWR features used were representative of designs utilizing internal jet pumps and two recirculation loops. Mark III containment features were used.

2.6.2.5 Reference SMITTR Program

The generic BWR and PWR aging management programs used in the present evaluations for both the typical and conservative scenarios were based on the safety-centered SMITTR programs that were used in the regulatory analysis for 10 CFR Part 54 (NUREG-1362). These basic SMITTR programs were supplemented by activities planned for the Lead Plant programs (Sciacca 1/3/93 and Sciacca 1/13/93). In addition, the aging management programs used as the basis for the current impact initiator estimates included actions anticipated for non-safety-related systems and equipment, but which licensees may undertake to maintain or enhance plant availability and performance. The

conservative case scenarios, in particular, assumed considerable expansion of the basic Part 54 programs to include actions on many balance-of-plant SSCs. The inclusion of activities directed toward non-safety-related SSCs considerably expanded the number of times given activities would be performed and significantly increased the variety of activities performed, compared with those considered for the 10 CFR Part 54 Regulatory Analysis. The inclusion of aging management activities beyond those characterized for safety-centered SMITTR programs enhances the comprehensiveness and conservatism of the estimates used in the preparation of the GEIS conservative cases. The typical license renewal program scenarios also include more SMITTR actions than those used for the 10 CFR Part 54 assessments, but to a lesser degree than the conservative case scenarios. The typical program SMITTR activities incremental to those anticipated under Part 54 were included to allow for voluntary actions on the part of licensees to better manage aging of balance-of-plant SSCs. All typical program activities were reviewed for possible overlap with the Maintenance Rule activities; any activities perceived to fall within the scope of the Maintenance Rule or other rules were eliminated from the programs.

2.6.2.6 Major Refurbishments and Replacements

The major refurbishment/replacement class of activities included in the license renewal programs characterized here is intended to encompass actions which typically take place only once in the life of a nuclear plant, if at all. Replacement of BWR recirculation piping and PWR steam generators falls into this category of activities. Many such activities were included in the conservative case license renewal scenarios. The items making up this category include both activities which have already been performed at some operating LWRs and activities which have not yet been performed, at least not to the extent assumed for the purpose of defining potential environmental impacts. The inclusion of activities which have already been performed on some existing nuclear plants is based on the premise that there are certain plants in the reactor population that will not have to perform these activities during the current license term, but that would elect to perform these major activities to enable safe and economic operation for the incremental term allowed with license renewal. In addition, major refurbishment activities included in these example license renewal programs encompass all areas of a nuclear power plant (e.g., structures, mechanical and electrical systems, fluid systems). This approach further ensures that the impacts characterized for the conservative case scenarios have a high probability of bounding the impacts likely to accrue to any individual plant seeking license renewal and extended plant operation.

The typical scenarios, in contrast, included fewer major refurbishment activities of this type. For these scenarios the assumption was made that most plants will have ongoing effective maintenance and refurbishment programs that preclude the need for refurbishment/replacement of all but a few components and structures.

2.6.2.7 Prototypic License Renewal Schedule

Figure 2.3 shows representative timelines for the license renewal process of a nuclear plant. The timelines shown were judged to be reasonable by the NRC staff. The schedule is applicable to both the typical and conservative license renewal scenarios. The upper timeline shows the relationship of the new license period to the initial license period. The lower line indicates the various outage types and their assumed timing over the period covered by a renewed license. The key underlying assumption for the timelines is that the licensee should be assured by the NRC 10 years before the expiration of its current operating license that the plant in question is suitable for license renewal. These 10 years are required for the licensee to arrange for alternative sources of power should a renewed license not be granted. The license renewal process is presumed to start with the licensee initiating a number of studies and analyses to support the license renewal application 3 years before submitting the application to the NRC. The NRC would then perform a detailed review of the application and, in the successful cases, issue a new license (with conditions) within 2 years after the application is received. The new license would go into effect at that point, covering the balance of the original 40-year term, as well as the additional 20-year term.

It was assumed that licensees would initiate incremental aging detection and management activities as soon as the new license was granted, as called for by 10 CFR Part 54. Discretionary major refurbishment activities might also be undertaken early into the license renewal term.

2.6.2.8 Schedule for Performing Major Refurbishment Activities

The reference schedule assumes that major refurbishment activities associated with

Figure 2.3 License renewal schedule and outage periods considered for environmental impact initiator definition.

license renewal are started shortly after the new license is granted, and that these are accomplished over several successive outages. They are completed by the time the plant completes its 40th year of operation, which is about 10 years into the new license term. The schedule for performing any major refurbishment activities will undoubtedly be highly plant specific, and such activities could well be spread throughout the term of the renewed license. Earlier timing of these activities provides the utilities with more time to recover the cost of the investment through the sale of energy produced. Thus, the schedules utilized for the present evaluations are reasonable, but alternative schedules are also possible.

The schedules utilized were similar for both the BWR and PWR programs. However, the typical programs have little need for an extended outage because the extent of major refurbishment activities is relatively modest. The "major refurbishment outage" duration for the typical programs was reduced compared with that deemed necessary for the conservative case scenarios.

2.6.2.9 Outage Types and Durations

Activities carried out in support of license renewal and extended plant life were assumed to be performed primarily during selected outages. Five types of outages were used: normal refuelings, 5-year ISI outages, 10-year ISI outages, current term refurbishment outages, and major refurbishment outages. Figure 2.3 illustrates when these outages are assumed to occur. The current term outages fall within the 40-year period initially covered by the plant's current license, but with license renewal they occur during the period covered by the new license.

Outage types and durations were established to allow estimation of the rates at which environmental impacts might be generated as a result of license renewal activities. For example, the number of workers required at a site for a given outage is dependent on the amount of work to be performed (labor hours), the time available to accomplish the work, and the number of labor hours expended per person-week or person-day. The number of workers so identified, in turn, allows estimation of potential socioeconomic and other impacts to affected communities.

Table 2.5 summarizes the different outage types and durations for both reactor types and for both the typical and conservative license renewal scenarios. Additional discussion of the basis used in selecting outage durations is provided in Appendix B.

2.6.3 Typical License Renewal Scenario

The characteristics of the typical license renewal program are discussed briefly in Section 2.6.3.1. Listings of the SSCs likely to be subject to incremental aging management activities are provided. Listings of the types of SMITTR actions and major refurbishment activities that may be performed as part of a typical license renewal program are reviewed and discussed in Appendix B. Section 2.6.3.2 summarizes the impact initiator quantities expected to be generated by such a program. Section 2.6.3.2 compares the impact initiator quantities for the typical program scenarios with the impactor initiator quantities currently produced from routine reactor operation.

2.6.3.1 Characterization of Typical License Renewal Programs

The characterization of license renewal programs required that three key types of information be developed:
(1) identification of the SSCs likely to be subject to incremental aging management activities, (2) candidate lists of the activities to be performed on these systems and components to suitably manage aging effects that could have potential environmental consequences, and (3) identification of environmental attributes (impact initiators) associated with those activities. The typical programs are intended to be representative of the typical or "average" plant's activities in support

of license renewal. However, the typical programs are still somewhat conservative; that is, some plants will not require all of the actions identified in the typical programs. The typical license renewal scenarios were based on the following.

- The Monticello and Yankee Rowe lead plant life extension (PLEX) programs were carefully reviewed. Activities included in either program were, with some exceptions, incorporated into the typical license renewal scenarios. The information obtained from the lead plants was also used to establish both the numbers of SSCs subject to a given activity and the schedule for performing such activities.
- All activities included in the Part 54 Regulatory Analysis which were pertinent to passive, long-lived SSCs and which were not likely to be implemented because of other rules or regulations were retained as incremental actions. The Part 54 activities were retained both to maintain consistency with the updated Part 54 Regulatory Analysis and to allow for a modest amount of conservatism in the typical scenarios.
- As noted previously, recently enacted rules and regulations, in particular the Maintenance Rule, were taken into account in developing typical license renewal or PLEX-related activities.
- Surveys were made to help establish the likelihood that certain major activities would be performed by typical licensees seeking license renewal. In particular, assessments were made relative to steam

generator replacement and reactor vessel annealing for PWRs, and for recirculation piping replacement for BWRs. These assessments reviewed the fraction of the affected reactor population that has already performed these refurbishment/replacement activities and ascertained whether such activities might need to be repeated for extended plant life. Based on the results of these reviews, it was assumed that typical license renewal programs will not need to include many such major activities.

Table 2.5 Outage duration summary

	Outage duration (months)	
Outage type	**Conservative**	**Typical**
Refueling	2	2
5-Year in-service inspection	3	3
10-Year in-service inspection	4	3
Current-term outage (refurbishment)	4	3
Major refurbishment outage	9	4

Typical program structures, systems, and components subject to incremental activities

Tables 2.6 and 2.7 list the SSCs used in the typical program evaluations for which incremental activities are assumed to be onducted during license renewal and extended life. Table 2.6 lists the items subject to incremental SMITTR actions; Table 2.7 lists items subject to major refurbishment/replacement activities. Table 2.6 includes SSCs subject to the addition of new or improved condition monitoring systems, as well as those subject to incremental SMITTR activities. Most of the items in these tables are common to both BWRs and PWRs.

Although the specific numbers of components and design features may be different for these two reactor types, they are similar enough that the environmental impacts resulting from aging management activities on these items will be reasonably similar for both reactor types. Differences in the numbers of like items employed in each plant design were taken into account in assessing impacts.

Table 2.6 Typical program structures and components subject to incremental SMITTR[a] activities in support of license renewal

Item	BWR/PWR[b]
AC or DC busses	Both
Actuation and instrumentation channels	Both
Bellows	BWR
Building cranes and hoists	Both

BWR control rod drive mechanisms	BWR
BWR recirculation pumps and motors	BWR
Check valves	Both
Compressed air system	Both
Containment	Both
Emergency diesel generators	Both
Fan coolers	Both
Fuel pool	Both
Heat exchangers	Both
Heating, ventilation, and air conditioning	Both
Hydraulic or air operated valves	Both
Main condensor	Both
Main generator	Both
Main turbine	Both
Metal containment, including suppression chamber	BWR
Motor-operated valves	Both
Motor-driven pumps and motors	Both
Nuclear steam supply system supports	Both
PWR critical concrete structure--containment	PWR
PWR reactor coolant pump	PWR
Reactor pressure vessel	Both
Reactor pressure vessel internals	Both
Turbine-driven pumps and turbines	Both

[a]SMITTR = surveillance, on-line monitoring, inspections, testing, trending, and recordkeeping.

[b]BWR = boiling-watert reactor; PWR = pressurized-water reactor.

Table 2.7 Typical program systems, structures, and components subject to major refurbishment or replacement activities

Item	BWR/PWR[a]
BWR safe ends and recirculation and feedwater piping inside containment	BWR
Compressed air system	Both
Containment	Both
Emergency diesel generators	Both
Main generator	Both
Major structures, including buildings and pipe enclosures	Both
Motor-operated valves	Both
Piping sections	Both
Reactor containment building	Both
Reactor pressure vessel	Both
Reactor pressure vessel internals	Both
Steam generators	PWR
Storage tanks	Both

[a]BWR = boiling-water reactor; PWR = pressurized-water reactor

Certain SSCs such as the reactor recirculation piping for BWRs and steam generators for PWRs are unique to the plant design type. Potential impacts from aging management activities on such items were treated separately for the two major plant categories.

Definition of aging management activities

The incremental aging management activities carried out to allow operation of a nuclear power plant beyond the original 40-year license term will be from one of two broad categories: (1) SMITTR actions, most of which are repeated at regular intervals, and (2) major refurbishment or replacement actions, which usually occur fairly infrequently and possibly only once in the life of the plant for any given item.

Most of the SMITTR activities included in the present assessment were taken from the Safety-Centered Aging Management program defined previously and utilized for the 10 CFR Part 54 License Renewal Regulatory Analysis (NUREG-1362). However, the current effort includes additional items and activities, because the previous analysis focused only on SSCs important to safety, whereas for the current efforts it has been assumed that licensees will also perform actions aimed at ensuring reliable and efficient electrical power production. Thus, many balance-of-plant SSCs are included here which were not included in the 10 CFR Part 54 evaluations.

In certain cases a SMITTR activity could involve replacement or refurbishment of the SSC being addressed. Any such SMITTR replacement/refurbishment activities for a particular item typically occur more than once in the extended life of the plant.

Table B.1 of Appendix B lists the incremental SMITTR actions used as the basis for estimating license renewal environmental impacts. It indicates the specific aging detection and mitigation actions performed on each SSC of concern. These activities include some which are undertaken only to improve reliability or economic performance; thus, Table B.1 includes several active components in addition to the passive, long-lived SSCs that are the focus of 10 CFR Part 54.

Table B.2 of Appendix B lists the major refurbishment or replacement activities used to estimate environmental impacts. The table indicates the fractions or portions of the SSCs involved which are subject to the stated actions. Unless otherwise noted, 100 percent of an SSC was assumed to be replaced or refurbished. As with the list of actions cited in Table B.1, the quantities assumed were based in part on the information provided in the industry pilot and lead plant studies and from reported existing industry experience on major refurbishments (Sciacca 1/3/93 and 1/13/93). In other cases engineering judgment provided the basis for the portions of the systems or structures being replaced or refurbished. The extent of major refurbishments envisioned for typical license renewal programs is fairly modest.

2.6.3.2 Typical Program Incremental Initiator Quantities

Table 2.8 summarizes the typical program impact initiator quantities resulting from the incremental SMITTR and major refurbishment/replacement activities assumed to be carried out in support of license renewal and extended plant life. Estimates of the amounts generated are shown for each of the outage types previously discussed, during which these impact initiators are expected to be generated from license renewal activities. Separate estimates are provided for BWRs and PWRs. All figures are shown on a per-plant basis (i.e., for a single nuclear plant).

A comparison of the figures shown in Table 2.8 with current reactor experience as discussed in Section 2.5.2 indicates that, for the typical license renewal scenario, incremental license renewal effects are expected to be relatively modest. For example, with current nuclear plant operation, roughly 1.5 million person-hours are expended each year for on-site operations and maintenance activities. The incremental efforts associated with license renewal-related activities are estimated to add between 500,000 and 700,000 person-hours for all such activities over the remaining life of a typical plant. Thus, the license renewal activities would add roughly 20,000 person-hours per year, which is a small increment compared to the 1.5 million person-hours per year typical of current reactor operation.

Table 2.8 Typical license renewal program environmental impact initiators

Outage type	Labor hours	Additional on-site personnel	Waste volumes (as-shipped) (m^3)	Occupational rad exps (person-sieverts)	Waste disposal costs (1994$)[a]	Labor costs (1994$)[a]	Capital costs (1994$)[a]	Total on-site costs (1994$)[a]	Off-site costs (1994$)[a]	To (1
Boiling-water reactors										
Full power operation (20 yrs)	0	0	0	0.00	0	0	0	0	0	0
Normal refueling[b]	4,148	10	2	0.04	23,000	196,940	215,460	435,400	47,751	483
5-yr ISI[c] refueling[d]	38,675	63	17	0.71	244,000	1,789,900	314,100	2,348,000	0	2,3
10-yr ISI refueling[e]	62,208	110	30	0.91	424,000	3,082,450	589,550	4,096,000	0	4,0
Current term refurbishments[f]	45,294	71	17	0.10	245,000	1,715,040	579,360	2,539,400	177,347	2,7
Major refurbishment outage[g]	298,375	361	69	1.53	976,000	12,585,040	57,589,360	71,150,400	13,804,688	84,
Total all occurrences	660,000	--	220	4.57	3,052,000	27,700,000	62,800,000	93,600,000	14,900,000	108
Pressurized-water reactors										
Full power operation (20 yrs)	0	0	0	0.00	0	0	0	0	0	0
Normal refueling[b]	3,488	8	1	0.03	18,000	166,265	145,635	329,900	27,179	357
5-yr ISI refueling[d]	20,935	33	11	0.30	153,000	953,750	185,250	1,292,000	13,886	1,3
10-yr ISI refueling[e]	37,482	60	22	0.51	313,000	1,691,600	309,400	2,314,000	831	2,3
Current term refurbishments[f]	45,924	72	18	0.11	272,000	1,741,880	580,920	2,594,800	176,530	2,7
Major refurbishment outage[g]	219,018	264	44	0.79	1,631,000	9,108,830	49,380,970	60,120,800	12,068,028	72,
Total all occurrences	510,000	--	170	2.61	3,482,000	21,000,000	53,500,000	78,000,000	13,000,000	91,

Notes:

[a]All cost figures are undiscounted 1994 dollars
[b]8 occurrences, 2-month duration each
[c]ISI = in-service inspection
[d]2 occurrences, 3-month duration each

[e]1 occurrence, 4-month duration
[f]4 occurrences, 4-month duration each
[g]1 occurrence, 9-month duration

To convert m^3 to ft^3, multiply by 35.32.
To convert person-sievert to person-rem, multiply by 100.

Source: Science and Engineering Associates, Inc., January 1995.

Table 2.8 indicates that the number of additional on-site personnel needed to accomplish license renewal-related activities is quite modest for most periods when such activities will be performed. The exception is the major refurbishment outage, when an average of between 200 and 400 additional personnel may be needed. Note that these personnel are in addition to the 700- to 800-person temporary work force typically called in to assist with current outages at nuclear power plants (see Table 2.4). The estimates of additional personnel presented in Table 2.8 are based on the assumption that the incremental work efforts are spread uniformly over the entire duration of the associated outages. In reality, some peaking of staffing requirements will occur during each outage. Additional analyses were performed to evaluate the extent of such peaking, and these analyses are discussed in Appendix B. For the typical BWR license renewal scenario, these analyses indicated that the on-site temporary work force would peak at about 1000 personnel. This peak occurs during the major refurbishment outage, and it includes the temporary work force needed to accomplish refueling and routine outage activities (e.g. routine maintenance and ISI activities) as well as license renewal-related activities. For the PWR, the corresponding temporary worker requirements reach a peak at about 900 additional staff. This peak requirement occurs during the current term outages.

The incremental occupational radiation exposure estimated to accrue because of license renewal activities is between 2.5 and 5 person-sievert (250 and 500 person-rem). On an annualized basis, this represents an increase in annual exposures of about 3 to 4 percent relative to current reactor operation experience.

LLW generation resulting from license renewal activities is projected to be between 185 and 220 m^3 (6,000 and 8,000 ft^3) of as-shipped LLW over the remaining life of the plants. Currently, PWRs typically generate about 250 m^3/year (8800 ft^3/year); the amount disposed of at BWRs has been about 560 m^3/year (19,700 ft^3/year). Thus, the amount of LLW expected to be added because of license renewal activities is roughly the equivalent of one-half to one year's production of waste under current operating conditions. This represents an increment over the remaining life of the plants of about 1 to 3 percent relative to what would be produced with continued present-basis plant operation.

Table 2.8 presents several types of costs associated with license renewal and extended plant life. These include incremental costs associated with additional labor, waste disposal, capital costs, and off-site costs (off-site engineering and administrative support). For the typical BWR license renewal program, the total incremental costs are estimated to be almost $110 million; those for the typical PWR program are estimated to be about $90 million. Although these costs will be incurred over the remaining life of a plant, more than half of these costs might well be incurred in the first few years after a renewed license is granted. For comparison purposes, recent non-fuel operations and maintenance (O&M) costs at U.S. nuclear plants have averaged about $75 million per year for a 1000-MW(e) plant, and capital additions have averaged about $28 million per year (1994 dollars). Thus, the estimated labor and capital expenditures associated with incremental license renewal activities over the remaining life of a plant with a renewed license are the equivalent of roughly a year's expenditures for O&M and capital additions currently experienced by LWRs, or less than a 5 percent increase for such expenditures on an annualized basis.

2.6.4 Conservative License Renewal Scenario

The characteristics of the conservative case license renewal programs are discussed briefly in Section 2.6.4.1. As was done in Section 2.6.3.1 for the typical programs, listings are provided of the SSCs likely to be subject to incremental aging management activities. Listings of the types of SMITTR actions and major refurbishment activities that may be performed as part of a conservative license renewal program are reviewed and discussed in Appendix B. Section

2.6.4.2 summarizes the impact initiator quantities expected to be generated by such programs and compares the impact initiator quantities for the conservative program scenarios with the impactor initiator quantities currently produced in routine reactor operation.

2.6.4.1 Characterization of the Conservative Program

The conservative license renewal scenarios are intended to capture what might occur for those outlier plants whose impacts will be considerably greater than what is typical of the reactor population as a whole. Because these conservative, or bounding, programs are quite comprehensive, they subsume impacts from more atypical plants.

The conservative case license renewal scenario uses a conservative basis for projecting activities and impacts. The primary bases and assumptions are as follows.

- In contrast with the typical programs, the recently enacted rules and regulations, in particular the Maintenance Rule, were not taken into account in revising license renewal or PLEX-related activities. This simplified approach was taken because accounting for such effects would have a negligible impact on the estimates of environmental impact initiator quantities.
- All activities included in the Part 54 Regulatory Analysis were retained as incremental actions. In many instances, the number of SSCs subjected to particular SMITTR activities was increased to reflect optional actions on the part of licensees to better ensure reliable and economical service for balance-of-plant systems and components.
- The major refurbishment and replacement activities included in the programs are quite expansive and encompass all aspects of the plant designs (e.g., structural, mechanical, and electrical). Similarly, the extent of such activities for particular SSCs is considerable in most cases and is more extensive than that anticipated for the average plant seeking license renewal.
- As was previously noted, several of the major refurbishment activities included in the present estimates have already occurred at many nuclear plants. These are activities such as steam generator replacement in PWRs and recirculation piping replacement in BWRs. These activities are included in the conservative case scenarios to encompass those plants that must perform such activities to achieve the desired extended plant life and efficiency, but that have not already done so or that might have to repeat such actions.

License renewal program definition

Conservative program SSCs subject to incremental activities. The conservative program SSCs assumed to be subject to incremental SMITTR activities included all of the SSCs identified in Table 2.6 for the typical program. In addition, the conservative program included the items listed in Table 2.9. The conservative program, in most instances, also included a greater number of a given type of SSC subject to SMITTR actions than did the typical programs. For example, the conservative programs included roughly twice the number of motor-operated valves subject to incremental aging detection and mitigation actions as did the typical programs. This approach was taken with the conservative programs to encompass what might occur at outlier plants.

Both the SSCs subject to incremental SMITTR activities and those subject to major refurbishment activities for the conservative program are more inclusive than those included in the typical program scenarios. A comparison of Tables 2.6 and 2.7 with Tables 2.9 and 2.10 readily demonstrates the more comprehensive nature of the conservative program compared with the typical program scenarios.

Table 2.9 Conservative program additional structures and components subject to incremental SMITTR[a] activities in support of license renewal

Item	BWR/PWR[b]
BWR control rod drive mechanism	BWR
Compressed air system	Both
Emergency diesel generator	Both

Fan cooler	Both
Main turbine	Both

[a]SMITTR = surveillance, on-line monitoring, inspections, testing, trending, and recordkeeping.
[b]BWR = boiling-water reactor; PWR = pressurized-water reactor.

Table 2.10 lists items subject to major refurbishment/replacement activities. Most of the items in these tables are common to both BWRs and PWRs.

Definition of conservative program aging management activities. As for the typical programs, the incremental aging management activities carried out for the conservative license renewal scenarios to allow operation beyond the original 40-year license term will include both SMITTR activities and major refurbishment activities.

The SMITTR activities associated with the conservative programs are quite similar to those developed for the typical programs, except that they cover additional types and numbers of SSCs. The scenarios developed for the conservative programs assumed that many balance-of-plant SSCs would be subject to license renewal-related activities to better ensure reliable and economical operation for the extended life of the plant.

Table 2.10 Conservative program systems, structures, and components subject to major refurbishment or replacement activities

Item	BWR/PWR[a]
Building crane	Both
BWR recirculation pump and motor	BWR
BWR safe ends and recirculation and feedwater piping inside containment	BWR
Concrete imbedments	Both
Condensate storage tank	Both
Control room communication systems	Both
Electrical cables in and out of containment	Both
Electrical raceways	Both
Emergency diesel generator	Both
Feedwater heater	Both
Heating, ventilation, and air conditioning	Both
Main generator	Both
Main turbine	Both
Major structures, including buildings and pipe enclosures	Both
Metal containment, including suppression chamber	BWR
Nuclear steam supply system supports	Both
Pressurizer and surge line	PWR
Piping section	Both
PWR coolant and feedwater piping inside containment	PWR
Radioactive waste processing system	Both
Reactor containment building	Both
Reactor pressure vessel	Both
Reactor pressure vessel internals	Both
Steam generator	PWR
Steam valve	Both
Switchyard	Both
Turbine pedestal	Both

Ultimate heat sink structures	Both

[a]BWR = boiling-water reactor; PWR = pressurized-water reactor.

Table B.1 of Appendix B lists the incremental SMITTR actions used as the basis for estimating license renewal environmental impacts. It indicates the specific aging detection and mitigation actions performed on each SSC of concern.

Table B.1 indicates the specific SMITTR activities included in each type of program, but it does not indicate the number of SSCs subject to a particular activity. The programs defined for the conservative case scenarios in all instances match or exceed the number of SSCs included in the corresponding typical license renewal programs.

The list of major replacement and refurbishment activities included here was derived largely from areas of concern identified in the industry pilot and lead NP-5181M, EPRI NP-5289P, EPRI NP-5002). This is true for both the conservative and typical scenarios. Those studies did not necessarily indicate that all of the items addressed should be replaced or undergo major overhauls. However, for all items addressed, there was sufficient concern over their long-term integrity that investigators thought, as a minimum, that additional analysis was warranted.

Although replacement may not have been indicated for the pilot and lead plants, at least a few plants may well face extensive actions of this type to ensure safe and economical operation throughout the renewal term. Therefore, regardless of the specific determinations for the pilot and lead plants, the SSCs of concern identified in those studies form a representative list of candidate items for inclusion in major replacement and refurbishment actions for outlier plants, and thus for the conservative scenarios. Other items included in this list were drawn from actions that have already occurred at one or several operating power plants. BWR recirculation piping replacement and PWR steam generator replacement fall into this category. Although many plants will undertake the replacement of such items during the current license term, there may be other plants which would undertake such tasks only to allow for extended plant operation. Inclusion of these activities in the conservative scenario evaluations provides for an upper bound estimate of what at least a few plants may undertake for license renewal.

Table B.2 of Appendix B lists the major refurbishment or replacement activities used to estimate environmental impacts for the conservative case scenarios. Unless otherwise noted, 100 percent of an SSC was assumed to be replaced or refurbished.

2.6.4.2 Conservative Program Incremental Initiator Quantities

Table 2.11 summarizes the conservative program impact initiator quantities resulting from the incremental SMITTR and major refurbishment/replacement activities assumed to be carried out in support of license renewal and extended plant life. A comparison with the estimates provided for the typical programs (Table 2.8) indicates that the conservative program scenario estimates of impact initiator quantities are factors of four to six greater than those for the typical programs. The type of information provided in Table 2.11 is identical to that provided in Table 2.8. Separate estimates are provided for BWRs and PWRs, and all figures are shown on a per-plant basis.

Table 2.11 Conservative license renewal program environmental impact initiators

Outage type	Labor hours	Additional on-site personnel	Waste volumes (as-shipped) (m^3)	Occupational rad exps (person-sieverts)	Waste disposal costs (1994$)[a]	Labor costs (1994$)[a]	Capital costs (1994$)[a]	Total on-site costs (1994$)[a]	Off-si costs (1994$
Boiling-water reactors									
Full power operation (20 yrs)	49,900	1	0	0.00	0	2,089,856	0	2,089,856	0

Normal refueling[b]	11,352	27	5	0.10	64,182	556,407	612,043	1,232,632	131,856
5-yr ISI[c] refueling[d]	48,406	78	21	0.27	290,508	2,258,137	712,251	3,260,896	0
10-yr ISI refueling[e]	101,308	122	38	1.08	537,102	4,585,522	1,250,536	6,373,160	0
Current term refurbishments[f]	732,280	866	233	1.91	3,303,684	28,170,043	10,843,605	42,317,332	3,122,8
Major refurbishment outage[g]	1,642,760	867	814	15.61	11,525,736	73,719,268	119,968,099	205,213,104	28,546,
Total all occurrences	4,910,000	--	1,900	26.66	26,372,000	202,000,000	170,900,000	399,300,000	42,100,
Pressurized-water reactors									
Full power operation (20 yrs)	49,900	1	0	0.00	0	2,089,856	0	2,089,856	0
Normal refueling[b]	8,733	21	3	0.07	46,166	406,936	410,540	863,642	79,897
5-yr ISI refueling[d]	28,550	46	13	0.35	185,790	1294,224	451,076	1,931,090	50,734
10-yr ISI refueling[e]	62,295	75	29	0.66	416,620	2,867,021	845,401	4,129,042	74,282
Current term refurbishments[f]	768,460	909	264	2.00	2,889,204	29,607,382	9,687,766	43,184,352	2,821,8
Major refurbishment outage[g]	3,241,260	1,713	1,324	13.80	20,204,944	139,806,842	110,947,895	270,959,681	26,185,
Total all occurrences	6,550,000	--	2,500	23.74	36,919,300	269,000,000	154,700,000	460,700,000	38,300,

Notes:

[a]All cost figures are undiscounted 1994 dollars
[b]8 occurrences, 2-month duration each
[c]ISI = in-service inspection
[d]2 occurrences, 3-month duration each
[e]1 occurrence, 4-month duration
[f]4 occurrences, 4-month duration each
[g]1 occurrence, 9-month duration

To convert m^3 to ft^3, multiply by 35.32
To convert person-sievert to person-rem, multiply by 100.

Source: Science and Engineering Associates, Inc., January 1995.

A comparison of the figures shown in Table 2.11 with current reactor experience as discussed in Section 2.5.2 indicates that, for the conservative license renewal scenario, incremental license renewal effects are expected to be fairly

significant. The incremental efforts associated with license renewal-related activities are estimated to add between 5 million and 7 million person-hours for all such activities over the remaining life of a conservative plant. These increments for license renewal can be compared with the roughly 1.5 million person-hours expended annually with current reactor operation.

If the license renewal efforts were uniformly spread over the 30-year period that a renewed license would be in effect, they would increase annual labor requirements by 10 to 15 percent. The effect of the incremental license renewal labor will be even more significant for certain periods. For example, the number of additional workers needed to accomplish the major refurbishment activities during the major refurbishment outage could potentially double or triple the number needed during a normally scheduled outage. The projected number of additional workers needed for the BWR major refurbishment outage is almost 900, averaged over the entire outage. For certain periods during this outage, the number of additional workers is estimated to be about 1200. For the PWR, the outage average increment in additional personnel needed for the major refurbishment outage is about 1700, and the number is expected to peak at about 2300 for certain periods during this outage. Note that these estimates of peak incremental personnel include the 700- to 800-person temporary work force typically called in to assist with current outages at nuclear power plants (see Table 2.4). Appendix B provides additional discussion of license renewal-related incremental staffing requirements.

The overall occupational radiation exposure estimated to accrue because of conservative program license renewal activities is between 23 and 24 person-sievert (2300 and 2400 person-rem). The large increase compared with the exposures anticipated for the typical programs is largely a result of the extensive major refurbishment activities expected to be undertaken with the conservative program scenarios. On an annualized basis, this is equivalent to an increase in annual exposures of about 20 to 30 percent relative to current reactor operation experience.

LLW generation from license renewal activities is projected to be between 1,900 and 2,500 m^3 (65,000 and 90,000 ft^3) of as-shipped LLW over the remaining life of the plants. Currently, PWRs typically generate about 250 m^3/year (8800 ft^3/year); the amount disposed of at BWRs has been about 560 m^3/year (19,700 ft^3/year). Thus, the amount of LLW expected to be added because of conservative program license renewal activities represents several years worth of production of waste under current operating conditions. This represents an increment over the remaining life of the plants of about 11 percent annually for the BWRs and about 30 percent annually for the PWRs relative to what would be produced with present-basis, continued plant operation. The larger percentage of PWR LLW results primarily from the large volume of the steam generators, which it is assumed will be replaced for the conservative program.

Table 2.11 indicates that the overall incremental costs associated with conservative program license renewal activities are projected to be in the range of $450 million to $500 million per plant (1994 dollars). With current nuclear plant operation, annual expenditures for fuel, O&M, and capital costs are in the range of $150 million to $250 million, depending on individual plant conditions. Thus, the license renewal expenditures represent 2 to 4 years of current overall operating costs.

2.6.5 Impact Initiator Estimate Uncertainties

The NRC staff believes that the license renewal scenarios presented in Section 2.6.4 reasonably characterize both the nature and magnitude of licensee activities that may be undertaken in support of license renewal and extended plant life. Both the typical and conservative programs include some discretionary activities that are assumed to be undertaken by licensees to better ensure economical and reliable plant operation, and that are in addition to those activities performed to meet the requirements of 10 CFR Part 54. The licensee actions in response to the 10 CFR Part 54 requirements, believed to be fairly modest, consist of a considerably smaller set of activities than those characterized for the typical license renewal scenarios. Appendix B presents estimates of impact initiator quantities strictly related to meeting the requirements of the license renewal rule. Thus, a broad spectrum of license renewal programs are possible, and the license renewal-related environmental impacts can vary widely from one plant to another, depending on specific plant conditions and on discretionary activities undertaken by each licensee/applicant. This variability in program characteristics, coupled with uncertainties in parameter values used to estimate specific initiator quantities, results in a considerable degree of uncertainty in the estimates presented in Tables 2.8 and 2.11. Although a rigorous

uncertainty analysis has not been performed, the estimates of individual impact initiators provided in Table 2.8 for the typical programs are judged to have uncertainties in the range of ± 30 percent. The more bounding assumptions employed for the conservative scenarios reduce the likelihood that the actual impact initiators experienced could be much higher than those presented in Table 2.11. The uncertainty range for the Table 2.11 estimates, therefore, is judged to be on the order of +10 percent to +30 percent.

2.7 Summary

[**Prev** | **Next** | **Table of Contents**]

This chapter described operating U.S. nuclear power plants and described the nature of their interactions with the environment. The basic requirements of the license renewal rule, 10 CFR Part 54, were reviewed with the focus on aspects which may result in incremental environmental impacts. Chapter 2 also described both typical and conservative license renewal programs characterized for the purpose of estimating license renewal-related environmental impacts. Estimates were provided of environmental impact initiators associated with these programs. These impact initiators are used in the balance of this document to identify and quantify anticipated environmental impacts associated with nuclear power plant license renewal.

2.8 Endnotes

[**Prev** | **Next** | **Table of Contents**]

Construction of nuclear units Grand Gulf Unit 2, Perry Unit 2, and Washington Nuclear Project Units 1, 3, 4, and 5 has been suspended; therefore, these units are not considered in this GEIS.
This category is generally discussed as a separate source of liquid waste primarily for PWRs in which the water has a different radionuclide content and chemistry from primary coolant.

2.9 References

[**Prev** | **Next** | **Table of Contents**]

DOE (U.S. Department of Energy), *Transporting Radioactive Materials: Answers to Your Questions*, U.S. Department of Energy, Washington, D.C., August 1989a.

DOE (U.S. Department of Energy), *Annual Report to Congress*, U.S. Department of Energy, Office of Civilian Radioactive Waste Management, Washington, D.C., December 1989b.

DOE/RW-0065, *Transporting Spent Nuclear Fuel: An Overview*, U.S. Department of Energy, Office of Civilian Radioactive Waste Management, Washington, D.C., March 1986.

DOE/RW-0220, *Final Version Dry Cask Storage Study*, U.S. Department of Energy, Office of Civilian Radioactive Waste Management, Washington, D.C., February 1989.

EPRI CS-3748, *Dechlorination Technology Manual*, Electric Power Research Institute, Palo Alto, California, 1984.

EPRI NP-3765, Project 2062-11, W. J. Bailey, et al., *Surveillance of LWR Spent Fuel in Wet Storage, Final Report*, prepared by Battelle, Pacific Northwest Laboratories, Richland, Washington, for the Electric Power Research Institute, Palo Alto, California, October 1984.

EPRI NP-5002, Virginia Power Company et al., *LWR Plant Life Extension*, Electric Power Research Institute, Palo Alto, California, January 1987.

EPRI NP-5181SP and EPRI NP-5181M, Northern States Power Company, *BWR Pilot Plant Life Extension Study at the Monticello Plant: Phase 1,* Electric Power Research Institute, Palo Alto, California, May 1987.

EPRI NP-5289P, Virginia Power Company et al., *PWR Pilot Plant Life Extension Study at Surry Unit 1: Phase 1,* Electric Power Research Institute, Palo Alto, California, July 1987.

EPRI NP-5526-V1, Project 1557-26, *Radwaste Generation Survey Update,* Volume 1: *Boiling Water Reactors: Final Report,* prepared by Analytical Resources, Inc., Sinking Spring, Pennsylvania, for the Electric Power Research Institute, Palo Alto, California, February 1988.

EPRI NP-5526-V2, Project 1557-26, *Radwaste Generation Survey Update,* Volume 2: *Pressurized Water Reactors: Final Report,* prepared by Analytical Resources, Inc., Sinking Springs, Pennsylvania, for the Electric Power Research Institute, Palo Alto, California, February 1988.

EPRI NP-5983, Project 2412-6, *Assessing the Impact of NRC Regulation 10 CFR 61 on the Nuclear Industry: Final Report,* prepared by Vance and Associates, Ruidoso, New Mexico, for the Electric Power Research Institute, Palo Alto, California, August 1988.

EPRI NO-6163, Project 2724-3, *On-Site Storage of Low-Level Radioactive Waste at Power Reactors: An International Scoping Study, Final Report,* prepared by Science Applications International Corporation, Inc., for the Electric Power Research Institute, Palo Alto, California, December 1988.

Gerstberger, C., Jr., "Westinghouse At-Reactor Consolidation Program," *Journal of Nuclear Materials Management,* **15**(3), 30-31, April 1987.

Johnson, E. R., *Trip Report--Attendance at IAEA Technical Committee Meeting on Methods for Expanding Spent Fuel Storage Facilities,* prepared by E. R. Johnson, Associates, Oak Ridge, Tennessee, for Martin Marietta Energy Systems, Inc., under Contract 41X-SD841V, Task 10, July 3, 1989.

NUMARC (Nuclear Management Resources Council), Survey of U.S. utility-owned nuclear power plants, Oak Ridge National Laboratory, Oak Ridge, Tennessee, and NUMARC, Washington, D.C., June 1990.

NUREG-0170, *Vols. 1 and 2, Final Environmental Impact Statement on the Transportation of Radioactive Material by Air and Other Modes, Volumes 1 and 2,* U.S. Nuclear Regulatory Commission, Office of Standards Development, December 1977.

NUREG-0945, "Licensing Requirements for Land Disposal of Radioactive Waste," *Final Environmental Impact Statement on 10 CFR Part 61, Vol. 1,* U.S. Nuclear Regulatory Commission, Office of Nuclear Material Safety and Safeguard, November 1982.

NUREG-1362, *Regulatory Analysis for Proposed Rule on Nuclear Power Plant License Renewal,* U.S. Nuclear Regulatory Commission, Washington, D.C., July 1990.

NUREG/CR-2907, J. Tichler, et al., *Radioactive Materials Released from Nuclear Power Plants, Annual Report 1987,* prepared by Brookhaven National Laboratory, Upton, New York, for the U.S. Nuclear Regulatory Commission, 1989.

NUREG/CR-5640, *Overview and Comparison of U.S. Commercial Nuclear Power Plant, Nuclear Power Plant System Source Book,* U.S. Nuclear Regulatory Commission, September 1990.

ORNL/TM-6472, J. B. Cannon, et al., *Fish Protection at Steam-Electric Power Plants: Alternative Screening Devices,* Oak Ridge National Laboratory, Oak Ridge, Tennessee, July 1979.

O'Sullivan, R. A., "International Consensus for the Safe Transport of Radioactive Materials: An Experience to Imitate," *IAEA Bulletin*, **30**(3), 31-34, 1988.

OTA-SET-304, *Transportation of Hazardous Materials*, Office of Technology Assessment, U.S. Congress, Washington, D.C., July 1986.

Sciacca, F. W., Science and Engineering Associates, Inc., letter to D. Cleary, U.S. Nuclear Regulatory Commission, "Letter Report Presenting Base Case and Typical License Renewal Program Impact Driver Summaries," January 3, 1993.

Sciacca, F. W., Science and Engineering Associates, Inc., letter to D. Cleary, U.S. Nuclear Regulatory Commission, "Bases and Assumptions Used in Developing Updated Base Case and Typical License Renewal Program Scenarios," January 13, 1993.

TVA (Tennessee Valley Authority), *Summary of Added Chemicals and Resulting End Product Chemicals*, U.S. Nuclear Regulatory Commission, 1978.

Page Last Reviewed/Updated Sunday, March 13, 2011

©2000- 2011 NRC

NRC: Generic Environmental Impact Statement for License Renewal of Nuclear Plants (NUREG-1437 Vol. 1) - Part 3

3. Environmental Impacts from Nuclear PowerPlant Refurbishment

[**Prev** | **Next** | **Table of Contents**]

3.1 Introduction

[**Prev** | **Next** | **Table of Contents**]

This chapter addresses the environmental impacts of refurbishment activities at an operating nuclear power plant in anticipation of license renewal. Section 2.4 describes the activities to be undertaken to prepare a nuclear power plant for operation following license renewal (see Tables 2.6 and 2.7). These activities will include (1) enhanced inspection, surveillance, testing, and maintenance and (2) repair, replacement, modification, and refurbishment of plant systems, structures, and components. For some plants, replacement of large components of the nuclear steam supply system (e.g., steam generator or pressurizer) is conceivable, as is repair or replacement of pumps, pipes, control rod systems, electronic circuitry, electrical and plumbing systems, or motors. Upgrading radioactive waste storage facilities could also be required because of increased low-level radioactive waste (LLW) generation and because a permanent high-level-waste repository is not yet available. Construction of new transmission lines is not expected to occur in conjunction with license renewal, although repair or replacement of structures may be needed occasionally. For example, wooden-pole structures may need rebuilding or replacement every 50-60 years. If construction of new lines is proposed, the impacts would be reviewed in accordance with the requirements of 10 CFR Part 51.

Refurbishment activities could result in environmental impacts beyond those that occur during normal plant operation. For example, site excavation and grading associated with construction of new waste storage facilities could result in fugitive dust emissions, localized air quality impacts, erosion, sedimentation, and disturbance of both aquatic and terrestrial ecosystems. Moreover, refurbishment could (1) require a sizable addition to the work force, (2) increase the radiation exposure to workers, and (3) generate increased quantities of LLW. These potential impacts are evaluated in the sections that follow.

3.2 On-Site Land Use

[**Prev** | **Next** | **Table of Contents**]

Farming and other types of land use occur on some nuclear plant sites. Some utilities have designated portions of their nuclear plant sites for land uses such as recreation, management of natural areas, and wildlife conservation. Changes in on-site land use at a nuclear plant could result if additional new spent fuel and interim LLW storage facilities were required. (Waste generation, handling, and disposal are discussed in Chapter 6.) Incremental land use resulting from license renewal-related activities, even major refurbishments, is expected to be modest. The greatest land use needs for such activities are projected to occur during the major refurbishment outages of the conservative license renewal scenarios. Major activities such as steam generator replacement in pressurized-water reactors (PWRs), recirculation piping replacement in boiling-water reactors (BWRs), replacement of some reactor vessel internal structures, main

turbine repairs, and general structural refurbishments are projected to occur for a few reactor plants during these outages.

Incremental land use associated with license renewal activities can be estimated from prior related experience within the U.S. nuclear industry. For example, a recent steam generator replacement at a U.S. PWR required about 1 ha (~2.5 acres) of land area to accommodate laydown, staging, handling, temporary storage, personnel processing, mockup and training, and related needs. The major activities projected to occur for the conservative license renewal scenarios are expected to require temporary land use for activities such as staging of new components and removing old components. In addition, the large number of temporary workers needed to accomplish the major refurbishment activities will likely require that temporary facilities be installed for on-site parking, training, site security access, office space, change areas, fabrication shops, mockups, and related needs. Based on previous experience with major refurbishments at nuclear power plants, it is expected that ~1-4 ha (~2.5-10 acres) of land may be needed to accommodate these refurbishment activities. Once these major activities and the major outages are completed, this land might be returned to its prior uses. Alternatively, the land could be used for on-site storage of LLW, spent fuel, and contaminated components such as steam generators until final off-site disposal is possible. Thus, some or all of the same land may be used both for the temporary major refurbishment needs and for the longer-term needs associated with on-site storage of waste materials. However, radioactive wastes are stored in remote parts of the site by some utilities in order to minimize worker radiation exposure and to avoid interference with routine activities. Typical license renewal scenario incremental land use requirements are bounded by those projected for the conservative scenarios.

The site is already owned by the utility and any land used for refurbishment activities will likely be within the exclusion area. Even if the land used for dry storage of spent fuel is on a remote part of the site, the impacts will be small. The U.S. Nuclear Regulatory Commission (NRC) has written a number of environmental assessments for on-site dry cask storage facilities and has reached a "finding of no significant impact" (FONSI) for each. The FONSI was reached considering the amount of land actually disturbed, the range of possible environmental impacts, and alternative uses of the land. On-site land use impacts are expected to be of small significance at all sites. Temporary disturbance of land may be mitigated by restoration to its original condition after refurbishment, or after site decommissioning. This is a Category 1 issue.

3.3 Air Quality

[**Prev** | **Next** | **Table of Contents**]

Most plant refurbishment activities associated with license renewal would be performed on equipment inside existing buildings and would not generate atmospheric emissions. The only potential sources of impacts to air quality would be (1) fugitive dust from site excavation and grading for construction of any new waste storage facilities and (2) emissions from motorized equipment and workers' vehicles.

Air quality impacts from these sources would be minor and of short duration. The disturbed area for the waste storage facilities and laydown areas, if required, is expected to be 4 ha (10 acres) or less (Section 3.2). During site excavation and grading, some particulate matter in the form of fugitive dust would be released into the atmosphere, but fugitive dust consists primarily of large particles that settle quickly and thus have minimal adverse public health effects. Because construction would probably occur within an existing plant yard, much less site preparation would be necessary than for a previously undisturbed site. Because of the (1) small size of the disturbed area, (2) relatively short construction period, (3) availability of paved roadways at existing facilities, and (4) use of the best management practices (such as seeding and wetting), fugitive dust resulting from these construction activities should be minimal.

Heavy construction vehicles and other construction equipment would generate exhaust emissions (which would include small amounts of carbon monoxide, oxides of nitrogen, volatile organic compounds, and particulate matter). These would be temporary and localized. Additional emissions would result from the vehicles of up to about 2300 construction, refurbishment, and refueling personnel during most of the 9-month refurbishment outage (Figure B.6). For refurbishment occurring in geographical areas of poor or marginal air quality, these vehicle exhaust emissions

could be cause for some concern. The 1990 Clean Air Act Amendments include a provision that no federal agency shall support any activity that does not conform to a state implementation plan designed to achieve the National Ambient Air Quality Standards for criteria pollutants (sulfur dioxide, nitrogen dioxide, carbon monoxide, ozone, lead, and particulate matter less than 10 µm in diameter). On November 30, 1993, the U.S. Environmental Protection Agency (EPA) issued a final rule (58 FR 63214) implementing the new statutory requirements, effective January 31, 1994. The final rule requires that federal agencies prepare a written conformity analysis and determination for each pollutant where the total of direct and indirect emissions caused by a proposed federal action would exceed established threshold emission levels in a nonattainment or maintenance area. An area is designated as nonattainment for a criteria pollutant if it does not meet National Ambient Air Quality Standards for the pollutant. A maintenance area is one that a state has redesignated from nonattainment to attainment.

Based on EPA's interpretation that mobile emissions from workers' vehicles should generally be considered as indirect emissions in a conformity analysis, a screening analysis was performed which indicated that the emissions from 2300 vehicles may exceed the thresholds for carbon monoxide, oxides of nitrogen, and volatile organic compounds (the latter two contribute to the formation of ozone) in nonattainment and maintenance areas. In addition, the amount of road dust generated by the vehicles traveling to and from work would exceed the threshold for particulate matter less than 10 µm in serious nonattainment areas. However, the assumption of adding 2300 workers' vehicles to existing traffic forms an upper bound of potential emissions; in reality, some workers would carpool to the refurbishment sites, while others would be driving to other construction sites if the proposed refurbishment activities were not occurring. In addition, EPA suggests that there may be some flexibility in the rigor of a conformity analysis, particularly with regard to the specific site, the extent of refurbishment, the pollutants which are in nonattainment, the severity of the nonattainment, the state regulatory agency, and the federal agency's control over workers' vehicles. In summary, vehicle exhaust emissions could be cause for some concern, but a general conclusion about the significance of the potential impact cannot be drawn without considering the compliance status of each site and the number of workers expected to be employed during the outage. This is a Category 2 issue.

3.4 Surface Water and Groundwater Quality

[**Prev** | **Next** | **Table of Contents**]

3.4.1 Surface Water

Refurbishment could impact surface water quality as a result of the effects of (1) refurbishment- or construction-related discharges to surface water and (2) project-related surface water consumption. Changes in water quality could affect aquatic biota and water uses (fishing, recreation, and water supply).

Because most refurbishment activities would be conducted indoors (Section 2.6), discharges would be readily controlled, thereby minimizing the potential for impacts on surface water quality. The construction of new structures for storage of spent fuel or LLW could require modest amounts of site excavation and grading, but there are no features unique to the refurbishment that would require unusual construction practices. Procedures for the control of nonpoint-source pollution from construction activities as mandated by Section 319 of the Clean Water Act are well known. Mitigative measures were developed at each nuclear power plant site to control impacts during original plant construction. These measures, which are listed in the environmental statements related to the issuance of construction permits, include controlling drainage by ditches, berms, and sedimentation basins; prompt revegetation to control erosion; stockpiling and reusing excavated topsoil; and various other techniques used to control soil erosion and water pollution. These same types of site-specific mitigation measures (often referred to as best management practices) are expected to be implemented during refurbishment to minimize impacts on surface water quality and aquatic biota. Therefore, the potential impacts of refurbishment on surface water quality are expected to be negligible (small) for all plants. Impacts of refurbishment on surface water quality and aquatic biota could be further reduced by additional mitigative measures, such as more stringent construction control techniques. However, because the effects of refurbishment are considered to be of small significance and potential mitigation measures are likely to be costly, the

staff does not consider the implementation of mitigation measures beyond "best management practices" to be warranted. This is a Category 1 issue.

Water consumption during refurbishment would not change from pre-refurbishment requirements unless the plant were temporarily shut down. If refurbishment activities resulted in more or longer plant outages than are typical for the facility, both cooling water withdrawals and routine permitted discharges of heat, biocides, or other chemical contaminants in the cooling system effluent would be reduced. The additional quantities of water required during construction for mixing, cleaning, and dust suppression would be negligible. For these reasons, water consumption impact during refurbishment is expected to be of small significance or beneficial for all plants. The only potential mitigation for any increase in water consumption would be to acquire the additional water from some other source. However, because this approach would provide very little, if any, environmental benefit and would be costly, the staff does not consider implementation of additional mitigation to be warranted. This is a Category 1 issue.

3.4.2 Groundwater

No liquid wastes were discharged to groundwater during construction of nuclear power plants, and none is expected to occur during refurbishment. During construction, liquid construction wastes were either temporarily retained in lined evaporation ponds or stored in drums for shipment to off-site disposal facilities. Because liquid construction wastes would be handled similarly during refurbishment no impacts to groundwater quality is expected.

The only impacts on groundwater quality reported during nuclear plant construction resulted from groundwater dewatering associated with deeply excavated building foundations and cooling water canals at sites close to the ocean. Groundwater dewatering at sites near the ocean can adversely affect groundwater quality by inducing saltwater intrusion. Deep excavations and site dewatering would not be required at any plant so no saltwater intrusion or groundwater quality impacts would occur.

Because refurbishment would not affect groundwater quality in any way, refurbishment would neither cause nor contribute to impacts on groundwater at any site. While there are several ways of mitigating adverse impacts to groundwater quality, no mitigation measures are warranted because there would be no adverse impacts to mitigate. This is a Category 1 issue.

3.5 Aquatic Ecology

[**Prev** | **Next** | **Table of Contents**]

Aquatic biota could be affected by adverse changes in water quality caused by construction or by changes in plant operation; however, if mitigative measures developed for the site during and since original construction are used, adverse effects on water quality and thus on aquatic biota would be minimal (Section 3.4.1). Potential impacts on aquatic biota from changes in operating conditions of the plant during refurbishment are expected to be small at all sites.

Effects of refurbishment on aquatic organisms are considered to be of small significance if plant-induced changes are localized and populations of aquatic organisms in the receiving waterbody are not reduced. During a major refurbishment outage there would be a reduction or elimination of cooling water withdrawals and discharges of heat, biocides, or other permitted chemicals in the cooling effluent. No adverse effects on aquatic biota would be caused at any power plant by reduced entrainment of organisms into the cooling system, reduced impingement against the intake screens, or reduced discharges of chemicals from any power plant site. Because no adverse effects on aquatic organisms are anticipated during refurbishment, the effects are considered to be of small significance for all plants. Since any effects would be minor and localized, they would not contribute to cumulative impacts. Water quality impacts could be readily controlled using current mitigative measures, and the reduction in cooling system operation during major refurbishment outages would reduce the number of aquatic organisms impacted by entrainment,

impingement, and nonradiological discharges. Hence, no mitigation measures beyond those already implemented in the current license period would be needed. The effect of refurbishment on aquatic biota is a Category 1 issue.

3.6 Terrestrial Ecology

[**Prev** | **Next** | **Table of Contents**]

The potential loss of plant and animal habitat resulting from laydown areas and possible construction of new waste storage facilities during refurbishment at nuclear power plant sites would be the principal terrestrial ecology concern. The amount of on-site land that could be disturbed would be expected to be ~1-4 ha (2.5-10 acres). No off-site habitat loss would be expected to occur except to the extent that refurbishment may cause increased residential and commercial growth in nearby communities (see Section 3.7.5). No off-site power-line expansions (construction of new lines, upgrading of existing lines, or right-of-way expansion) are expected as part of license renewal; licensees must notify the NRC of such major modifications. Rebuilding wooden pole structures, however, may be necessary about every 50-60 years.

The significance of lost habitat depends on the importance of the plant or animal community involved. Particularly important habitats are wetlands, riparian habitats, staging or resting areas for large numbers of waterfowl, rookeries, restricted wintering areas for wildlife (e.g., winter deer yards), communal roost sites, strutting or breeding grounds of gallinaceous birds, and areas containing rare plant communities (e.g., Atlantic white cedar swamps). Such habitats are uncommon and are unlikely to occur on most plant sites. However, if such resources do occur on plant sites, refurbishment activities should be planned to avoid them to the extent feasible. If no important resource would be affected, the impacts would be considered minor and of small significance. If important resources could be affected by refurbishment activities, the impacts would be potentially significant. Because the significance of ecological impacts cannot be determined without considering site-specific and project-specific details, and because mitigation may be warranted, this is a Category 2 issue.

3.7 Socioeconomic Impacts

[**Prev** | **Next** | **Table of Contents**]

3.7.1 Introduction

This section describes the socioeconomic impacts associated with nuclear power plant refurbishment. Based on a literature search and citation review, the following plant-induced socioeconomic impacts were chosen for in-depth evaluation: changes to local housing (i.e., availability, costs, and characteristics); the magnitude of new nuclear plant tax payments in relation to total revenues in host communities; disruptions of local public services (i.e., education, transportation, public safety, social services, public utilities, and tourism and recreation); changes of local land use and development patterns; local employment levels; and disturbances to historic and aesthetic resources at and around the plant site. Of these socioeconomic impacts only those directly affecting the natural and built environment are carried forward to the decision whether to renew an operating license. The regional economic impact--including income, employment, and taxes--is not considered in the license renewal decision. The impacts discussed in this chapter are only those *new* impacts expected to be caused by refurbishment-related activities. Impacts are discussed for each plant's "impact" or "study" area, which includes those jurisdictions in which the most pronounced socioeconomic impacts are expected. Plant-induced population growth, while not an impact itself, was studied as a potential influence on a number of the impacts listed above.

For this analysis, the socioeconomic impacts that occurred during construction of seven case study nuclear plants were identified and used to forecast refurbishment-related impacts at the same seven plants. Differences between the construction and refurbishment periods in terms of key impact predictors such as work force size, population, and community infrastructure conditions were factored into the impact analysis. The analysis assumes that no other major construction projects will occur concurrently with plant refurbishment. If other large construction projects are ongoing during refurbishment, the socioeconomic impacts could be greater than those predicted. Because the case study plants

(Figure 3.1) were representative of the range of U.S. nuclear plants in terms of a number of key factors (remoteness, population density, geographic region, age of plant), the impacts projected for the seven sites provide upper and lower bounds for the range of impacts that will occur at all plants.

Socioeconomic impacts are site-specific in nature. Therefore, simultaneous relicensing of several nuclear power plants will not have cumulative regional or national impacts. However, if two plants within 80 km (50 miles) of each other are refurbished simultaneously, worker in-migration and the related impacts might be larger. An overview of the socioeconomic research methods used is provided in Appendix C.

Socioeconomic impact analyses, particularly of resources affected by changes in population, are based on work force estimates presented in Chapter 2, Appendix B, and SEA (1995). The conservative scenario work force represents the upper bound of work force requirements for a typical plant. The primary socioeconomic impact analyses are based on the largest estimated work force (i.e., the PWR work force of 2273 persons).[1] This peak work force would occur during the 9-month major refurbishment outage immediately before the expiration of the initial operating license (see Appendix B).

After the refurbishment work force has peaked, refueling will be undertaken to prepare for continued plant operation during the license renewal term. Because of uncertainty surrounding the work force numbers, a sensitivity analysis was performed wherein socioeconomic impacts were predicted in response to a work force roughly 50 percent larger than the projected bounding case PWR refurbishment work force (i.e., 3400 workers). The discussion of conclusions for each socioeconomic topic states whether or not the category of impacts expected with the original estimate would change in response to the larger work force.

The estimates for the conservative case and typical case BWR peak work forces are 1500 and 1017, respectively.[2] The peak

Figure 3.1 The seven case study nuclear plants.

on-site work force associated with the conservative BWR refurbishment scenario would occur during the current-term outages that will begin up to 10 years before the expiration of the original operating license. Because the current-term outages will last only 4 months, refueling and refurbishment workers will be on-site simultaneously. Both types of workers are included in the estimated peak work force of 1500. Under the BWR typical refurbishment scenario, the peak work force (1017) would occur during the final refurbishment period, projected to last 4 months. Because the outage would be brief, refueling workers will be on-site at the same time as refurbishment workers and are therefore included in the total work force estimate.

Limited additional analyses were conducted to determine if these smaller work forces would cause smaller impacts. These analyses were conducted only for resources found to be subject to potential moderate or large impacts with a work force of 2273 and known not to experience moderate or large impacts with smaller work forces (e.g., associated with refueling/maintenance activities). These analyses are discussed in the education and land use sections (i.e., those resources which, at certain case-study sites, fit the above description).

Population growth is important because it is one of the main drivers of socioeconomic impacts. The population increases resulting from construction-related in-migration at the seven case study plants varied (Table 3.1). Of all U.S. nuclear power plants, Indian Point has the highest combination of population density and proximity to urban centers, whereas Wolf Creek has one of the lowest combinations of the same variables. Consequently, Indian Point and Wolf Creek serve as the lower and upper bounds, respectively, of construction-related growth as a percentage of the case study areas' total populations.

Both the absolute and relative population growths associated with the refurbishment of the case study plants would be less than were experienced during original construction (see Table 3.1). The absolute growth would be smaller because the scale of refurbishment activities would be smaller than original construction. Relative growth would also be smaller

because existing populations of the host communities are expected to be larger than during original construction (see Appendix C). The levels of refurbishment-related growth projected for the case study sites are expected to bound the levels of growth that would occur at all other plants.

Table 3.1 Past and projected population growth associated with the peak construction and refurbishment work forces at the seven case study nuclear power plants[a]

Plant	Past population growth caused by original plant construction	Past population growth as a percentage of study area's total population during peak construction years	Projected population growth caused by refurbishment	Projected population growth (refurbishment) as a percentage of study area's projected total population
Arkansas Nuclear One	2756	8.3	2355	3.7
D. C. Cook Bridgman--Lake Township	175	4.6	141	3.1
Berrien County	2193	1.3	1825	1.0
Diablo Canyon	3308	2.6	3631	0.8
Indian Point Dutchess County	390	0.2	367	0.1
	309	<0.1	290	<0.1
Oconee	701	1.7	496	0.7
Three Mile Island	301	2.2	189	1.0
Wolf Creek	2329	20.5	798	9.1

[a]Includes both direct and indirect workers and their families.

Source: The staff.

Refurbishment-related growth is expected to represent between less than 0.1 percent and 9.1 percent of the local areas' total populations for all plants (Table 3.1). As a result, for most U.S. nuclear power plants, refurbishment would result in only small population increases and correspondingly small population-driven impacts. Rural areas that are more than 80 km (50 miles) from an urban center (i.e., a population of at least 100,000) and that have low population densities would experience greater population-driven impacts.

3.7.2 Housing

The impacts on housing are considered to be of small significance when a small and not easily discernible change in housing availability occurs, generally as a result of a very small demand increase or a very large housing market. Increases in rental rates or housing values in these areas would be expected to equal or slightly exceed the statewide inflation rate. No extraordinary construction or conversion of housing would occur where small impacts are foreseen.

The impacts on housing are considered to be of moderate significance when there is a discernible but short-lived reduction in available housing units because of project-induced in-migration. Rental rates and housing values would rise slightly faster than the inflation rate, but prices should realign quickly once new housing units became available or once project-related demand diminished. The new housing units added to the market during construction are easily absorbed into the market once project-related demand diminishes. Minor or temporary conversions of nonliving space

to living space, such as converting garages to apartments, may occur. Also, there may be a temporary addition of new mobile home parks or expansions of existing parks.

The impacts on housing are considered to be of large significance when project-related demand for housing units would result in very limited housing availability and would increase rental rates and housing values well above normal inflationary increases in the state. Such increases could make housing unavailable or less affordable to nonproject personnel. Substantial conversions of housing units, such as single-family houses to apartments, as well as substantial overbuilding so that these units cannot be absorbed into the housing market once project demand diminishes are also considered indicative of large impacts.

Housing impacts were evaluated by comparing refurbishment-related housing demand to the projected local housing market (number of units and vacancies). The housing impacts that occurred during original plant construction were considered, as were current housing characteristics (e.g., the existence of multifamily units in the local and neighboring housing markets) and the presence of any growth control measures that limit housing development. The size of the future housing market during the refurbishment period was estimated based on historical housing growth rates in the study areas. Housing demand unrelated to refurbishment was estimated based on the projected population at refurbishment time and the 1990 household size. A complete discussion of these assumptions is provided in Section C.4.1.2. Information concerning original construction-related housing impacts and current housing markets at the seven case study sites was obtained from site-specific NUREG reports, the U.S. Census Bureau, local housing authorities, and interviews with realtors and community development officials (see references in Appendix C).

Table 3.2 summarizes the housing impacts that resulted from original construction of the seven case study plants and lists construction-related housing demand relative to the local housing market, which is one of several factors that influence significance. In most cases, project-related housing demand was so small or the local and regional housing markets were so large that no large impacts resulted. The large housing impacts experienced at Wolf Creek were evidenced by (1) limited or no housing availability, (2) the occupation of previously abandoned housing units and of structures that were not originally intended for residential use, and (3) drastically increased rental costs. At this and other sites, local mobile home parks expanded to meet increased demand. None of the case study plant areas experienced substantial new construction of housing units that were built solely in response to project-related demand for housing. Construction of new housing units was noted at some sites during and before plant construction, but all new units were readily absorbed into the market once project-related demand diminished. The smallest work force that induced large impacts occurred with 640 on-site workers at Wolf Creek during operations-period refuelings (Section 4.7.2). Consequently, a work force as small as 640 may cause large impacts in low population areas but less significant impacts in higher population areas.

Potential refurbishment impacts on housing at each of the case study sites are summarized in Table 3.3. Table 3.3 also includes information about peak housing demand and housing demand relative to the projected number of housing units in each study area, although there is no simple direct relationship between these numbers and significance levels. Projected refurbishment impacts at the case study sites range from small to large. Declining economic conditions in the host communities would not increase the severity of the impact because public revenues are not used to build or maintain the dwellings that plant workers would occupy and because economic decline often is accompanied by a loss of population, which could increase the number of available housing units.

Moderate and large impacts are possible at sites located in rural and remote areas, at sites located in areas that have experienced extremely slow population growth (and thus slow or no growth in housing), or where growth control measures that limit housing development are in existence or have recently been lifted. Because impact significance depends on local conditions that cannot be predicted at this time, housing is a Category 2 issue.

3.7.3 Taxes

Plant-induced increases to local tax receipts are considered beneficial. The benefits of plant refurbishment to local tax structures were considered by examining the magnitude of potential new tax payments by the nuclear power plants in relation to total revenues in the host community. The new payments could be made directly to local government

jurisdictions or indirectly to local government jurisdictions through state tax and revenue sharing programs. A more detailed discussion of the methods used to predict tax impacts is provided in Section C.4.1.3.

Table 3.2 Summary of housing impacts during construction of seven nuclear power plants in case study

Site	Peak housing demand in study area	Housing demand as a percentage of the total number of housing units in the study area	Factors affecting housing impact	Impact on housing
Arkansas Nuclear One	858	6.25	Construction-related demand caused temporary housing shortages and increased rents, expansion of housing stock	Moderate
D. C. Cook				
Berrien County	902	1.8	Existing housing stock and housing growth adequate to meet demand	Small
Diablo Canyon	1297	2.7	Impact increased by rapidly increasing demand for housing unrelated to project	Moderate
Indian Point				
Westchester County	194	0.28	Very large housing market	Small
Dutchess County	143	0.04		Small
Oconee	167	1.2	Duke power provided on-site housing for 150 workers	Small
Three Mile Island	146	2.8	Substantial growth in housing stock occurred unrelated to project demand	Small
Wolf Creek	713	18	Low vacancy rate in a small housing market; very large construction-related demand	Large

Source: The staff.

Table 3.3 Projected housing impacts of refurbishment at the seven case study nuclear power plants

Plant	Peak housing demand in the study area	Housing demand as a percentage of housing units in the study area	Projected impacts
Arkansas Nuclear One	976	3.8[a]	Small
D. C. Cook			
Berrien C.	811	1.1	Small to moderate
Diablo Canyon	1388	0.9	Moderate to large[b]
Indian Point			
Dutchess County	158	0.1	Small
Westchester County	124	0.02	Small
Oconee	260	0.6	Small
Three Mile Island	124	1.7	Small
Wolf Creek	355	9.2	Large

[a]If the rapid growth in housing that occurred during 1986-1990 continues, demand as a percentage of total housing units would be 3.2 percent. The more conservative estimate is presented in this table and used to determine potential impacts.

[b]Because of current growth control measures, a slower growth scenario for San Luis Obispo County (see Appendix C) is used. If these growth control measures remain in effect, the impact to housing would be moderate to large. However, if these growth control measures were removed, impacts would be small.

Source: The staff.

The benefits of taxes are considered to be small when new tax payments by thenuclear plant constitute less than 10 percent of total revenues for local taxing jurisdictions. The additional revenues rovided by direct and indirect plant payments on refurbishment-related improvements result in little or no change in local property tax rates and the provision of public services. The benefits of taxes are considered moderate when new tax payments by the nuclear plant constitute 10 to 20 percent of total revenues for local taxing jurisdictions. The additional revenues provided by direct and indirect plant payments on refurbishment-related improvements result in lower property tax levies and increased services by local municipalities. The benefits of taxes are considered to be large when new tax payments by the nuclear plant represent more than 20 percent of total revenues for local taxing jurisdictions. Local property tax levies can be lowered substantially, the payment of debt for any substantial infrastructure improvements made in the past can easily be made, and future improvements can continue.

Property taxes paid to the municipalities and taxing school districts surrounding the seven case study plants were very small at the start of original plant construction, and income and residential-related property taxes, although increasing rapidly throughout the construction period, were usually not large. Generally, as construction progressed, the assessed value of the nuclear plants increased dramatically; therefore, the property tax payments based on these assessments also increased greatly.

Capital improvements made to plants during the final refurbishment outage very likely would have no effect on taxes until they have been completed; thus, they should cause no tax impacts until the license renewal term. However, the assessed value of the plant is expected to increase before that time because of refurbishment-related capital improvements that occur during current-term outages.

Based on the benefits that occurred as a result of original plant construction, benefits resulting from the increase in direct and indirect tax payments to local jurisdictions during refurbishment would be small to moderate at the case study sites. The magnitude of current tax payments provides an indication of the magnitude of new tax payments. Where existing tax payments account for only a small or moderate share (< 20 percent) of total revenue (see Table 4.13), the new additional tax payments will have only small benefits, especially if the increase in assessed value from capital improvements is small. At sites where the plants currently contribute significantly (> 20 percent) to their respective local jurisdictions' total revenues (see Table 4.13) and where substantial capital improvements greatly increase the assessed value, the new benefits may be moderate.

3.7.4 Public Services

The projected impacts of refurbishment on public services were considered for education, transportation, public safety, social services, level of demand for public utilities, and tourism and recreation.

For most public services, future impacts were projected based on the estimated number of in-migrating workers and on the projected state of the local infrastructure. To predict impacts to local educational systems, the number of in-migrating workers accompanied by their families and their associated family sizes also are important. In the area of transportation, the total number of workers is important whether or not they are new to the host community, because they will use local roads to access the project site. Assumptions about the above-mentioned variables were based on patterns observed during original plant construction. Additional information on the calculation of public service impacts is provided in Sections C.1.5.3 and C.4.1.4. Information concerning construction-related public service impacts

and current services at the case study sites was obtained from site-specific reports and interviews with local officials (see references in Appendix C).

Because projections of infrastructure capacity were based on current conditions, it is appropriate to ask whether future deterioration of host community infrastructure could invalidate the conclusions about impact significance presented below. Infrastructure deterioration is unlikely because these facilities and services generally have been maintained (and in many instances improved) during the period of plant operations. In addition, continued plant operations will ensure continued revenues for those local jurisdictions currently taxing the plant, providing a measure of protection for communities in which economic decline might otherwise result in infrastructure deterioration. Also, in communities where the quality and quantity of public services have declined, a population decrease has often occurred, reducing the demand for these services. Finally, the sensitivity analysis discussed in Section 3.7.1 revealed that local public services could accommodate the growth associated with a work force 50 percent larger than the bounding case refurbishment work force without increasing the significance level of the impacts. As a result, for those elements of the infrastructure projected to experience only small impacts, the capacity of the existing infrastructure in impact area communities could decline and still be adequate to support projected refurbishment-induced growth.

3.7.4.1 Education

Impact determinations depend on the baseline conditions of the potentially affected school system (e.g., whether it is below, at, or exceeding maximum allowed student/teacher ratio). In general, small impacts are associated with project-related enrollment increases of 3 percent or less. Impacts are considered small if there is no change in the school systems' abilities to provide educational services and if no additional teaching staff or classroom space is needed. Moderate impacts generally are associated with 4 to 8 percent increases in enrollment. Impacts are considered moderate if a school system must increase its teaching staff or classroom space even slightly to preserve its pre-project level of service. Any increase in teaching staff, however small (e.g., 0.5 full-time equivalent), that occurs from hiring additional personnel or changing the duties of existing personnel (e.g., a guidance counselor assuming classroom duties) may result in moderate impacts, particularly in small school systems. Large impacts are associated with project-related enrollment increases above 8 percent. Education impacts are considered large if current institutions are not adequate to accommodate the influx of students or if the project-related demand can be met only if additional resources (e.g., new teachers and/or classrooms) are acquired.

Impacts to education that resulted from plant construction depended upon the number of in-migrating workers (and, thus, school-aged dependents) and the size of the existing school system (and thus its ability to absorb additional students). School districts were affected for a short period of time, and disruption to existing institutions was small in most cases. However, some schools had to set up temporary classrooms to accommodate the influx of children. At the case-study sites, impacts to education during plant construction ranged from small to moderate (see Table 3.4). Once construction was well under way, positive monetary impacts began to be experienced by some school districts where plants were located.

Projected impacts to education during the refurbishment period would be potentially large at Wolf Creek where school enrollment is projected to increase 9 percent because of the in-migration of the refurbishment work force (see Table 3.5). At the Arkansas Nuclear One site, a projected 4 percent increase in enrollment could cause moderate impacts to education. At all other sites, impacts would be small.

Table 3.4 Original construction-induced public service impacts at the seven case study nuclear power plant sites

Service	Arkansas Nuclear One	Diablo Canyon	D. C. Cook	Indian Point	Oconee	Three Mile Island	Wolf Creek
Education	Small	Small to moderate	Small	Small	Small	Small	Moderate
Transportation	Small	Small	Small to moderate	Small	Small	Moderate	Large

Public safety	Small	Small	Small	Small	Small	Small	Small
Social services	Small	Small	Small	Small	Small to moderate	Small	Small
Public utilities	Small to moderate	Small	Small	Small	Small	Small	Moderate
Tourism and recreation	Small	Small	Small	Small	Small	Small	Small to moderate

Source: The staff.

Table 3.5 Projected refurbishment-induced public service impacts at seven nuclear plant sites in case study

Service	Arkansas Nuclear One	D. C. Cook	Diablo Canyon	Indian Point	Oconee	Three Mile Island	Wolf Creek
Education	Moderate	Small	Small	Small	Small	Small	Moderate to large
Transportation	Small	Moderate	Small	Small	Small	Moderate	Large
Public safety	Small	Small	Small	Small	Small	Small	Small
Social services	Small	Small	Small	Small	Small	Small	Small
Public utilities	Small	Small	Small to moderate	Small	Small	Small	Small to moderate
Tourism and recreation	Small	Small	Small	Small	Small	Small	Small

Source: The staff.

Analyses of the smaller projected work forces associated with BWR conservative and BWR typical scenarios were conducted at case-study sites where impacts induced by the PWR conservative scenario work force were projected to be moderate or large. The analyses determine whether these smaller work forces would induce smaller impacts to education. At the most sparsely populated case study site (Wolf Creek), impacts to education would be moderate even with the smaller work forces. At the other site (Arkansas Nuclear One), impacts would be moderate with the 1500-person BWR bounding case work force but small with the 1017-person BWR typical case work force.

Based on the case-study analysis of the PWR bounding-case work force, refurbishment impacts on education at all plant sites would range from small to large, although most sites will experience only small new impacts to education. Analyses of the work forces associated with the BWR bounding- and typical-case scenarios conclude that moderate impacts to education could be induced by these smaller work forces but only at sites that are remotely located and sparsely populated. Because site-specific and project-specific factors determine the significance of impacts to education and the potential value of mitigation measures, this is a Category 2 issue.

3.7.4.2 Transportation

Significance levels of transportation impacts are related to the Transportation Research Board's level of service (LOS) definitions (Transportation Research Board 1985). LOS is a qualitative measure describing operational conditions within a traffic stream and their perception by motorists. LOS data, when available, can be obtained from local planners, county engineers, or local or state departments of transportation. Using LOS data describing existing conditions, the staff projected LOS conditions that would arise from the additional traffic associated with refurbishment (or continued operations). The LOS at each site was examined during shift change times when plant- and non-plant-related traffic is heaviest. A general definition of each LOS is provided below.

LOS A and B are associated with small impacts because the operation of individual users is not substantially affected by the presence of other users. At this level, no delays occur and no improvements are needed. LOS C and D are associated with moderate impacts because the operation of individual users begins to be severely restricted by other

users and at level D small increases in traffic cause operational problems. Consequently, upgrading of roads or additional control systems may be required. LOS E and F are associated with large impacts because the use of the roadway is at or above capacity level, causing breakdowns in flow that result in long traffic delays and a potential increase in accident rates. Major renovations of existing roads or additional roads may be needed to accommodate the traffic flow.

Impacts to local transportation networks during construction of the case study plants were large only at Wolf Creek (Table 3.4) because of the inadequacy of the main local access roads to accommodate plant-related traffic. Large transportation impacts also are anticipated at Wolf Creek during refurbishment. In this case, current operations workers would contribute to the magnitude of those impacts. The magnitude of impacts experienced at this and the other case study sites depends primarily on the state of the existing road network rather than on the host area population density.

Level of service	Conditions
A	Free flow of the traffic stream; users are unaffected by the presence of others.
B	Stable flow in which the freedom to select speed is unaffected but the freedom to maneuver is slightly diminished.
C	Stable flow that marks the beginning of the range of flow in which the operation of individual users is significantly affected by interactions with the traffic stream.
D	High-density, stable flow in which speed and freedom to maneuver are severely restricted; small increases in traffic will generally cause operational problems.
E	Operating conditions at or near capacity level causing low but uniform speeds and extremely difficult maneuvering that is accomplished by forcing another vehicle to give way; small increases in flow or minor perturbations will cause breakdowns.
F	Defines forced or breakdown flow that occurs wherever the amount of traffic approaching a point exceeds the amount which can traverse the point. This situation causes the formation of queues characterized by stop-and-go waves and extreme instability.

Refurbishment impacts to transportation would be small at most sites, but a few sites would experience moderate or large impacts. Because impacts are determined primarily by road conditions existing at the time of the project and cannot be easily forecast, a site-specific review will be necessary to determine whether impacts are likely to be moderate or large and whether mitigation measures may be warranted. Transportation is a Category 2 issue.

3.7.4.3 Public Safety

Impacts on public safety are considered small if there is little or no need for additional police or fire personnel. Impacts are considered moderate if some permanent additions to the police and fire protection forces or some new capital equipment purchases are needed. Impacts are considered to be large if there is a substantial increase in the permanent manpower of police and fire protection forces and in the need to purchase additional vehicles.

No serious disruption of public safety services occurred as a result of original construction at the seven case study sites (Table 3.4). Most communities showed a steady increase in expenditures connected with public safety departments. Tax contributions from the plant often enabled expansion of public safety services in the purchase of new buildings and equipment and the acquisition of additional staff.

Public safety services may experience some benefit from any increase in tax revenue generated by plant improvements during current term outages. Past adverse impacts at the case study sites were found to be small, and nothing in the literature review indicated reason to expect moderate or large impacts. Accordingly, any adverse public safety impacts associated with future plant refurbishment at case study sites would be small.

Based on the case-study analysis, it is determined that there would be little or no need for additional police or fire personnel. Therefore, adverse public safety impacts at all sites would be small. Sensitivity analysis indicated that this

conclusion would be true even with a peak work force of 3400 workers. Some minor positive impacts might result because of increased tax payments. Because the impacts are small and the implementation of additional mitigation measures (e.g., additional personnel or capital equipment) would be costly, no mitigation measures beyond those implemented during the current term license would be warranted. Therefore, public safety is a Category 1 issue.

3.7.4.4 Social Services

The impacts on social services are considered small if no change in the current level of service occurs. Impacts are considered moderate if some additional personnel are needed to administer existing service programs. Impacts are considered large if new programs and additional personnel are required.

Impacts to local social services associated with the original construction of the case study plants generally were small (Table 3.4), but some areas did see a small increase in both the amount of dollars spent for new or existing programs and the demand for service during the construction period.

Based on original construction experience at case study plants, the staff anticipates that refurbishment-related population increases would lead to no change in the current levels of social service provided (Table 3.5). Consequently, the impacts of refurbishment on social services would be small at all sites. Because there would be no change in the levels of service and because mitigation measures (e.g., hiring additional social service personnel) beyond those implemented during the current term license would be costly, no mitigation measures would be warranted. This is a Category 1 issue. Sensitivity analysis indicates that this conclusion would be true even with a peak of 3400 workers.

3.7.4.5 Public Utilities

Impacts on public utility services are considered small if little or no change occurs in the ability to respond to the level of demand and thus there is no need to add to capital facilities. Impacts are considered moderate if overtaxing of facilities during peak demand periods occurs. Impacts are considered large if existing service levels (such as the quality of water and sewage treatment) are substantially degraded and additional capacity is needed to meet ongoing demands for services.

In general, small to moderate impacts to public utilities were observed as a result of the original construction of the case study plants (Table 3.4). While most locales experienced an increase in the level of demand for services, they were able to accommodate this demand without significant disruption. Water service seems to have been the most affected public utility.

Public utility impacts at the case study sites during refurbishment are projected to range from small to moderate. The potentially moderate impact at Diablo Canyon is related to water availability (not processing capacity) and would occur only if a water shortage occurs at refurbishment time.

Because the case studies indicate that some public utilities may be overtaxed during peak periods, the impacts to public utilities would be moderate in some cases, although most sites would experience only small impacts. This is a Category 2 issue.

3.7.4.6 Tourism and Recreation

Impacts on tourism and recreation are considered small if current facilities are adequate to handle local levels of demand. Impacts are considered moderate if facilities are overcrowded during peak demand times. Impacts are considered large if additional recreation areas are needed to meet ongoing demands.

In most of the case study areas, the original construction of a nuclear power plant had positive effects on tourism and recreation facilities. For example, some locales have been able to build new recreation facilities because of plant-related tax revenues. Some improvement to recreation facilities and programs may be possible if additional tax revenue

is available as a result of current-term refurbishment at the plant. Increased demand associated with the refurbishment work force and in-migrating population is expected to cause only small impacts to recreation at the case-study sites.

Based on the case study analysis, the beneficial impacts of refurbishment would continue at most sites. Sensitivity analysis indicates that this conclusion would be true even with a peak work force of 3400 workers. Current facilities would continue to be adequate to handle local levels of demand at all sites, and developing additional facilities would be costly. Therefore, no mitigation measures (e.g., improving or expanding existing facilities) beyond those implemented during the current term license would be warranted. This is a Category 1 issue.

3.7.5 Off-Site Land Use

The issue evaluated in this section concerns refurbishment-induced changes to local land use and development patterns. Because the value attributed to land-use changes can vary for different individuals and groups, this analysis does not attempt to conclude whether such changes have positive or negative impacts. The methodology used to define impact significance and project impacts is discussed briefly in the introduction to Section 3.7 and is detailed in Section C.4.1.5.

The impacts to off-site land use are considered small if population growth results in very little new residential or commercial development compared with existing conditions and if the limited development results only in minimal changes in an area's basic land-use pattern. Land-use impacts are considered to be moderate if plant-related population growth results in considerable new residential or commercial development and the development results in some changes to an area's basic land-use pattern. The impacts are considered to be large if population growth results in large-scale new residential or commercial development and the development results in major changes in an area's basic land-use pattern.

Although it is difficult to predict the exact nature of land-use impacts that will result from any nuclear plant's refurbishment, the original construction experience at the case study plants provides some key predictors of impacts. Generally, if plant-related population growth is less than 5 percent of the study area's total population, off-site land-use changes would be small, especially if the study area has established patterns of residential and commercial development, a population density of at least 60 persons per square mile (2.6 km^2), and at least one urban area with a population of 100,000 or more within 80 km (50 miles).

If refurbishment-related growth is between 5 and 20 percent of the study area's total population, moderate new land-use changes can be expected. Such impacts would most likely occur when the study area has established patterns of residential and commercial development, a population density of 30 to 60 persons per square mile (2.6 km^2), and one urban area within 80 km (50 miles).

Small, moderate, and large off-site land-use impacts resulted from the original construction at the study sites. Large impacts resulted during construction at the two sites where lakes were created. Because no major off-site land use conversion would be needed to support the refurbished plants, only small impacts of this sort are expected. Large impacts were not induced at any site by population growth (see Table 3.6 and Appendix C).

Because the residential settlement pattern of the refurbishment work force is expected to be comparable to that of the original construction work force at many nuclear plants, population-driven land-use impacts that have resulted from the original construction can be used to predict some of the off-site land-use impacts of refurbishment. Thus, the staff expects that refurbishment-related population increases will result in small to moderate new off-site land-use impacts for socioeconomic case study plants (see Table 3.6 and Appendix C).

For the case study site where the staff anticipates moderate land-use changes associated with population in-migration, the staff has conducted additional analyses to determine whether smaller work forces would induce smaller impacts. This analysis shows that at this case-study site moderate impacts are possible with the BWR conservative scenario construction work force (1500 persons), but only small impacts are anticipated with the BWR typical scenario construction work force (1017 persons).

Based on predictions for the case study sites, refurbishment at all nuclear plants is expected to induce small or moderate land-use changes. There will be new impacts; but for almost all plants, refurbishment-related population growth would typically represent a much smaller percentage of the local areas' total population than did original construction-related growth. Moderate land use changes are also possible under the BWR conservative scenario, but only small impacts would be associated with the BWR typical scenario. Because future impacts are expected to range from small to moderate, and because land-use changes could be considered beneficial by some community members and adverse by others, this is a Category 2 issue. A sensitivity analysis shows that large changes in land use would not occur even with a 3400-person work force.

Table 3.6 Significance levels for original construction and refurbishment-related off-site land-use impacts at seven case study nuclear power plants

Plant	Construction	Refurbishment
Arkansas Nuclear One	Moderate	Small
D. C. Cook	Moderate	Small
Diablo Canyon	Small	Small
Indian Point	Moderate	Small
Oconee	Large[a]	Small
Three Mile Island	Small	Small
Wolf Creek	Large[a]	Moderate

[a]Large impact because lake construction was associated with site development, not because of population growth (see Appendix C).

Source: The staff.

3.7.6 Economic Structure

The issue evaluated in this section concerns the impact of plant refurbishment on local employment and income levels.

Economic effects are considered small if peak refurbishment-related employment accounts for less than 5 percent of total study area employment. Effects are considered moderate if peak refurbishment-related employment accounts for 5 to 10 percent of total study area employment. Effects are considered large if peak refurbishment-related employment accounts for more than 10 percent of total study area employment. In this context, "plant-related employment" refers to area residents employed at the nuclear power plant or at indirect jobs resulting from a nuclear plant's presence. Employees who live outside the study area and work at the plant are not included.

The study of economic structure examines employment because of its preeminent role in determining the economic well-being of an area. Economic impacts at the case study plants were predicted by comparing the number of direct and indirect jobs created by a plant's refurbishment with the total employment of the local study area at the time of refurbishment. These impacts are considered positive. The potential economic impacts of plant refurbishment at all sites were projected based on the seven case study plants.

During original construction, plant-related employment represented 0.3-25.6 percent of total employment in the communities near the case study plants. Table 3.7 shows the past effects associated with the construction work force and the projected effects of the refurbishment work force for all seven case study sites. The impacts to economic structure of both direct and indirect employment were included in this assessment.

Based on the findings at the case study sites, refurbishment-related economic effects would range from small benefits to moderate benefits at all nuclear plant sites. No adverse effects to economic structure would result from refurbishment -related employment. This conclusion would apply in the event of a much larger refurbishment work force because the associated impacts are beneficial.

3.7.7 Historic and Archaeological Resources

For this discussion and that in Section 4.7.7, historic resources are considered to be any prehistoric or historic archaeological site or historic property, district, site, or landscape in or eligible for inclusion in the *National Register of Historic Places* or having great local importance.

Sites are considered to have small impacts to historic and archaeological resources if (1) the State Historic Preservation Office (SHPO) identifies no significant resources on or near the site; or (2) the SHPO identifies (or has previously identified) significant historic resources but determines they would not be affected by plant refurbishment, transmission lines, and license-renewal-term operations and there are no complaints from the affected public about altered historic character; and (3) if the conditions associated with moderate impacts do not occur. Moderate impacts may result if historic resources, determined by the SHPO not to be eligible for the *National Register*, nonetheless are thought by the SHPO or local historians to have local historic value and to contribute substantially to an area's sense of historic character. Sites are considered to have large impacts to historic resources if resources determined by the SHPO to have significant historic or archaeological value would be disturbed or otherwise have their historic character altered through refurbishment activity, installation of new transmission lines, or any other construction (e.g., for a waste storage facility). Determinations of significance of impacts are made through consultation with the SHPO.

Any new construction activity, including building new waste storage facilities, new parking areas, new access roads to existing transmission lines, or new transmission lines, is particularly important to an analysis of impacts to historic and archaeological resources. Therefore, a refurbishment plan detailing areas of land disturbance is necessary to assess the potential impacts. Historic and archaeological resources vary widely from site to site; there is no generic way of determining their existence or significance. Also, additional resources (e.g., an archaeological site) may be identified before refurbishment begins or their historic significance may be newly established (e.g., a historic building). For these reasons, it is not possible to conclude that only small impacts would occur at the case study sties.

In addition, conclusions with respect to potential impacts to historic resources at the case study sites can be drawn only through consultation with the SHPO. The National Historic Preservation Act of 1966, especially Section 106, requires consultation with the SHPO and possibly the Advisory Council on Historic Preservation to determine whether historic and archaeological resources (either in or eligible for inclusion in the *National Register of Historic Places*) are located in the area and whether they will be affected by the proposed action.

Table 3.7 Past construction-related and projected refurbishment-related employment effects at seven case study nuclear plants.

	Construction			Refurbishment		
Nuclear plant	**Plant-related employment[a]**	**Percentage of total study area employment**	**Magnitude of impact**	**Percentage of total study area employment in peak refurbishment year**	**Magnitude of impact**
Arkansas Nuclear One	964	6.4	Moderate	5.8	Moderate
D. C. Cook					
Bridgman-Lake	140	8.8	Moderate	7.5	Moderate
Township	2569	6.5	Small	3.3	Small
Berrien County					
Diablo Canyon	3153	3.6	Moderate	1.8	Small
Indian Point					
Westchester	966	0.3	Small	0.2	Small
County					
Oconee	706	3.3	Small	1.9	Small
Three Mile Island	259	2.1	Small	6.0	Small

Wolf Creek	1361	25.6	Large	6.8	Small

[a]Includes both direct and indirect employment and income for study area residents.

Source: The staff.

It is unlikely that moderate or large impacts to historic resources occur at any site unless new facilities or service roads are constructed or new transmission lines are established. However, the identification of historic resources and determination of possible impact to them must be done on a site-specific basis through consultation with the SHPO. The site-specific nature of historic resources and the mandatory National Historic Preservation Act consultation process mean that the significance of impacts to historic resources and the appropriate mitigation measures to address those impacts cannot be determined generically. This is a Category 2 issue.

3.7.8 Aesthetic Resources

The issues evaluated in this section concern the impacts of construction and refurbishment activities on aesthetic resources at and around nuclear power plants. Primarily, aesthetic impacts would be temporary, would be limited both in terms of land disturbance and the duration of activity, and would have characteristics similar to those encountered during industrial construction: dust and mud around the construction site, traffic and noise of trucks, and construction disarray on the site itself. If severe, these effects could have implications for the economic and social institutions and functions of communities. Aesthetic resources are the physical elements that are pleasing sensory stimuli and include natural and manmade landscapes and the way the two are integrated. In this evaluation, the staff considers aesthetic resources to be primarily visual.

Levels of impacts for aesthetic resources are defined largely by the impact of the proposed changes as perceived by the public, not merely the magnitude of the changes themselves. The potential for significance arises with the introduction (or continued presence) of an intrusion into an environmental context resulting in measurable changes to the community (e.g., population declines, property value losses, increased political activism, tourism losses).

Sites are considered to have small impacts on their host communities' aesthetic resources if there are (1) no complaints from the affected public about a changed sense of place or a diminution in the enjoyment of the physical environment and (2) no measurable impact on socioeconomic institutions and processes. Sites are considered to have moderate impacts on their host communities' aesthetic resources if there are (1) some complaints from the affected public about a changed sense of place or a diminution in the enjoyment of the physical environment and (2) measurable impacts that do not alter the continued functioning of socioeconomic institutions and processes. A site is considered to have large impacts on its host community's aesthetic resources if there are (1) continuing and widely shared opposition to the plant's continued operation based solely on a perceived degradation of the area's sense of place or a diminution in the enjoyment of the physical environment and (2) measurable social impacts that perturb the continued functioning of community institutions and processes.

Because refurbishment would not result in substantial physical changes to existing plants and because the duration of these activities is expected to be short, new aesthetic impacts are expected to be limited to temporary effects. Based on projections for the case study sites, noticeable impacts on aesthetic resources from refurbishment activities could occur only at those sites where well-recognized aesthetic resources have been identified and protected by community organizations. Insignificant levels of impact on aesthetic resources are likely to be experienced in most host communities where (1) no scenic protection organizations are active, (2) active organizations view refurbishment activities as nonthreatening to such resources, or (3) either few or no distinctive aesthetic resources exist or refurbishment activities are not perceived to be threatening to local resources.

Refurbishment activities will be conducted on-site and primarily within existing buildings. Other than a possible increase in local traffic, due to refurbishment workers, refurbishment activities are not expected to be readily noticeable from off-site viewpoints at any plant. Thus, without a visual intrusion within the physical environment there is no stimulus that could lead to complaints from the public about a changed sense of place or a diminution in the enjoyment of the physical environment and measurable impact on socioeconomic institutions and processes. For these reasons, the

impact on aesthetic resources is found to be small. Because there will be no readily noticeable visual intrusion, consideration of mitigation is not warranted. Aesthetic impacts of refurbishment is a Category 1 issue.

3.8 Radiological Impacts

[**Prev** | **Next** | **Table of Contents**]

Radiological impacts include off-site dose to members of the public and on-site dose to the work force. Each of these impacts is generic to all light-water reactors (LWRs). Section 2.6 and Appendix B identify the changing out of steam generators at PWRs and the replacement of recirculation piping at BWRs as the major anticipated refurbishment activities. Public radiation exposures and occupational radiation exposures from refurbishment activities for license renewal can be evaluated on the basis of information derived from past occurrences and projections for other repairs. Effluents anticipated during major refurbishment events were estimated on the basis of historical information derived for steam generator changeouts at PWRs and replacements of recirculation piping at BWRs, refurbishment tasks that have already taken place several times within the LWR power reactor industry. From these estimates, the maximum individual and average doses to members of the public were compared with the design objective of Appendix I to 10 CFR Part 50 and with baseline effluents produced during normal reactor operations. Occupational exposures were similarly estimated on the basis of detailed reports of major refurbishment or replacement actions. The radiological significance of the doses caused by refurbishment was compared with doses from normal operation, and risks from occupations not associated with ionizing radiation. Major historical refurbishment actions are referred to in Section 2.6 and are described in detail in Appendix B. Radiological impacts of transportation are discussed in Chapter 6.

A detailed discussion is provided in Chapter 6 of the radiological impacts of low-level waste, mixed waste, and spent fuel generated by power reactors during the renewal period; the impacts attributable to the uranium fuel cycle; and the impacts of the transportation of fuel and waste.

In response to comments on the draft generic environmental impact statement (GEIS) and the proposed rule, the standard defining a small radiological impact has changed from a comparison with background radiation to sustained compliance with the dose and release limits applicable to the activities being reviewed. This change is appropriate and strengthens the criterion used to define a small environmental impact for the reasons that follow. The Atomic Energy Act requires NRC to promulgate, inspect, and enforce standards that provide an adequate level of protection of the public health and safety and the environment. These responsibilities, singly and in the aggregate, provide a margin of safety. The definitions of the significance level of an environmental impact (small, moderate, or large) applied to most other issues addressed in this GEIS are based on an ecological model that is concerned with species preservation, ecological health, and the condition of the attributes of a resource valued by society. Generally, these definitions place little or no weight on the life or health of individual members of a population or an ecosystem. However, health impacts on individual humans are the focus of NRC regulations limiting radiological doses. A review of the regulatory requirements and the performance of facilities provides the bases to project continuation of performance within regulatory standards. For the purposes of assessing radiological impacts, the Commission has concluded that impacts are of small significance if doses and releases do not exceed permissible levels in the Commission's regulations. This definition of "small" applies to occupational doses as well as to doses to individual members of the public. Accidental releases or noncompliance with the standards could conceivably result in releases that would cause moderate or large radiological impacts. Such conditions are beyond the scope of regulations controlling normal operations and providing an adequate level of protection. Given current regulatory activities and past regulatory experience, the Commission has no reason to expect that such noncompliance will occur at a significant frequency. To the contrary, the Commission expects that future radiological impacts from the fuel cycle will represent releases and impacts within applicable regulatory limits.

3.8.1 Public Exposures

This section addresses the impacts on members of the public of radiation doses caused by refurbishment activities, including doses from effluents as well as from direct radiation. This issue is generic to all 118 nuclear power plants. To determine the relative significance of the estimated public dose for refurbishment, the staff compared dose projections

for refurbishment with the historical (baseline) doses experienced at PWRs and BWRs. The dose estimates were based on reports evaluating effluent releases during refurbishment efforts (projected and measured).

Evaluating and analyzing public exposures to radioactive emissions associated with refurbishment was done in light of the regulatory requirements for nuclear power plants, methods for calculating doses from gaseous and liquid effluents, the levels of risk that authoritative agencies have determined to be associated with radiation exposure, and baseline radiation exposure data.

3.8.1.1 Regulatory Requirements

Nuclear power reactors in the United States must be licensed by the NRC and must comply with NRC regulations and conditions specified in the license in order to operate. NRC regulations in 10 CFR Part 20 include requirements that apply to all licenses such as individual nuclear power plants. In particular, maximum allowable concentrations of radionuclides in air and water above background at the boundary of unrestricted areas are specified to control radiation exposures of the public and releases of radioactivity. These concentrations are based on an annual total effective dose equivalent of 0.1 rem to individual members of the public. (A discussion of the International System of units used in measuring radioactivity and radiation dose is given in Appendix E, Section E.A.3.) In addition, design criteria and technical specifications concerning releases from the plant are required to minimize the radiological impacts associated with plant operations to levels as low as reasonably achievable (ALARA).

In 10 CFR Part 50.36a, conditions are imposed on licensees in the form of technical specifications on effluents from nuclear power reactors. These specifications are intended to keep releases of radioactive materials to unrestricted areas during normal operations, including expected operational occurrences, to ALARA levels. Appendix I to 10 CFR Part 50 provides numerical guidance on dose-design objectives and limiting conditions for operation of LWRs to meet the ALARA requirement. All licensees have provided reasonable assurance that the dose-design objectives are being met for all unrestricted areas. The design objective doses for Appendix I are summarized in Table 3.8.

In addition to NRC limitations, nuclear power plant releases to the environment must comply with EPA standards in 40 CFR Part 190, "Environmental Radiation Protection Standards for Nuclear Power Operations." These standards specify limits on the annual dose equivalent from normal operations of uranium fuel-cycle facilities (except mining, waste disposal operations, transportation, and reuse of recovered special nuclear and byproduct materials). The standards are given in Table 3.8. Radon and its daughters are excluded from these standards.

EPA standards in 40 CFR Part 61, "National Emission Standards for Hazardous Air Pollutants; Regulation of Radionuclides," apply only to airborne releases. The EPA specified an annual effective dose equivalent limit of 10 mrem for airborne releases from nuclear power plants; however, no more than 3 mrem can be caused by any isotope of iodine. However, EPA has stayed the rule for NRC-licensed commercial nuclear power reactors based on its finding that NRC's program for power reactor air effluents protects and is likely to continue to protect the public health and safety with an ample margin of safety.

Experience with the design, construction, and operation of nuclear power reactors indicates that compliance with the design objectives of Appendix I to 10 CFR Part 50 will keep average annual releases of radioactive material in effluents at small percentages of the limits specified in 10 CFR Part 20 and 40 CFR Part 190. At the same time, the licensee is permitted the flexibility of operation, compatible with considerations of health and safety, to ensure that the public is provided a dependable source of power, even under unusual operating conditions that may temporarily result in releases higher than such small percentages but still well within the regulatory limits.

Table 3.8 Design objectives and annual limits on doses to the general public from nuclear power plants[a]

	Tissue	Gaseous	Liquid
	Design objectives, 10 CFR Part 50, Appendix I		
Total body, mrem		5[b]	3

Any organ (all pathways), mrem	10
Ground-level air dose[b], mrad	10 (gamma) 20 (beta)
Any organ[c] (all pathways), mrem	15
Skin, mrem	15
Dose limits, 40 CFR Part 190, Subpart B	
Total body[d], mrem	25
Thyroid[d], mrem	75
Any other organ[d], mrem	25

[a]Calculated doses.

[b]The ground-level air dose has always been limiting because an occupancy factor cannot be used. The 5-mrem total body objective could be limiting only in the case of high occupancy near the restricted area boundary.

[c]Particulates, radioiodines.

[d]All effluents and direct radiation except radon and its daughters.

A major revision of 10 CFR Part 20 became effective in 1991. A significant change is the explicit requirement that the sum of the external and internal doses (total effective dose equivalent) for a member of the public may not exceed 100 mrem/year. This value is an annual limit and is not intended to be applied as a long-term average goal. Summations are to be performed using the methodology in International Commission on Radiological Protection (ICRP) Publication 26 (1977). The revised airborne effluent limits are based on 50 mrem/year. Therefore, with regard to radiation levels at any unrestricted area, the limit of 100 mrem in 7 consecutive days is eliminated, while the limit of 2 mrem in any 1 h is retained. Licensees may comply with the 100-mrem limit by demonstrating (1) by measurement or calculation that the individual likely to receive the highest dose from sources under the licensee's control does not exceed the limit or (2) that the concentrations of radioactive material released in gaseous and liquid effluents averaged over 1 year do not exceed the new levels at the unrestricted area boundary and that the dose in an unrestricted area exceeds neither 2 mrem in any given hour nor 100 mrem in 1 year. It is difficult to judge how federal regulations and industry standards will change between the present time and the license renewal period, which, for the newest reactors, may be 40 years from now. Some indications of future trends can be summarized, however. Two changes are discussed that could significantly affect radiation protection programs at the 118 power plants:

- New ICRP recommendations. ICRP-60 (1991) has recommended an occupational dose limit of 10-rem effective dose equivalent, accumulated over defined periods of 5 years. They have further specified that the effective dose should not exceed 5 rem in any single year. The NRC has carefully reviewed the recommendations of the ICRP and is reviewing the comments of the scientific community and others on these recommendations, and the ICRP response to inquiries. In addition, NRC staff will review the recommendations of other expert bodies, such as the National Council on Radiation Protection and Measurements (NCRP), and participate in the deliberations of the U.S. Committee on Radiation Research and Policy Coordination and any interagency task force convened by the EPA to consider revised federal radiation guidance. Any future reductions in the dose limits by NRC would be the subject of a future rulemaking proceeding.
- NCRP lifetime dose recommendation. NCRP has recommended that a worker's dose in rem should not exceed his age in years. The recommendation was not accepted for the 1991 revision of 10 CFR Part 20. NRC considers that if the magnitude of the annual dose is limited, there is a *de facto* limitation on the lifetime dose that can be received. The annual dose limit is preferable to an actual cumulative lifetime dose limit because the cumulative limit could act to limit employment, raising questions concerning the right of an individual to pursue employment in a chosen profession. Nonetheless, the Institute of Nuclear Power Operations has expressed considerable interest in the recommendation, and at many plants records are being examined to determine whether the more experienced workers meet this criterion. For those who do not, the utilities may face decisions involving worker protection and

liability considerations from a viewpoint favoring restrictions and the need for skilled and experienced workers during the process leading up to and extending throughout the license renewal period.

3.8.1.2 Effluent Pathways for Calculations of Dose Commitment to the Public

When an individual is exposed to radioactive materials through air or water pathways, the dose is determined in part by the amount of time spent in the vicinity of the source or the amount of time the radionuclides inhaled or ingested are retained in the individual's body (exposure). The consequences associated with this exposure are evaluated by calculating the dose commitment. The total effective dose equivalent is the sum of the deep dose from external sources and the committed effective dose equivalent for internal exposures. This latter dose is that which would be received over a 50-year period following the intake of radioactive materials for 1 year under the conditions existing at the midlife of the station operation (typically 15 years).

Radioactive effluents can be divided into several groups based on physical characteristics. Among the airborne effluents, the radioisotopes of the noble gases krypton, xenon, and argon neither deposit on the ground nor are absorbed and accumulated within living organisms; therefore, the noble gas effluents act primarily as a source of direct external radiation emanating from the effluent plume. For these effluents, dose calculations are performed for the site boundary where the highest external-radiation doses to a member of the general public are estimated to occur.

A second group of airborne radioactive effluents--the fission-product radioiodines, as well as carbon-14 and tritium--are also gaseous but some can deposit on the ground or be inhaled during respiration. For this class of effluents, estimates are made of direct external radiation doses from ground deposits (as well as exposure to the plume). Estimates are also made of internal radiation doses to total body, thyroid, bone, and other organs from inhalation and from vegetable, milk, and meat consumption.

A third group of airborne effluents consists of particulates and includes fission products, such as cesium and strontium, and activated corrosion products, such as cobalt and chromium. These effluents contribute to direct external radiation doses and to internal radiation doses through the same pathways as described above for the radioiodine. Doses from the particulates are combined with those from the radioiodines, carbon-14, and tritium for comparison with one of the design objectives of Appendix I to 10 CFR Part 50.

The liquid effluent constituents could include fission products such as strontium and iodine; activation and corrosion products, such as sodium, iron, and cobalt; and tritiated water. These radionuclides contribute to the internal doses through pathways described above from fish consumption, water ingestion (as drinking water), and consumption of meat or vegetables raised near a nuclear plant and using irrigation water, as well as from any direct external radiation from recreational use of the water near the point of a plant's discharge.

The release of each radioisotope and the site-specific meteorological and hydrological data serve as input to radiation-dose models that estimate the maximum radiation dose that would be received outside the facility by way of a number of pathways for individual members of the public and for the general public as a whole. These models and the radiation-dose calculations are discussed in Revision 1 of Regulatory Guide 1.109, "Calculation and Annual Doses to Man from Routine Releases of Reactor Effluent for the Purpose of Evaluating Compliance with 10 CFR Part 50, Appendix I."

Doses from all airborne effluents except the noble gases are calculated for individuals at the location or source point (for example, the site boundary, garden, residence, milk cow or goat, and meat animal) where the highest radiation dose to a member of the public has been established from each applicable pathway (such as ground deposition, inhalation, vegetable consumption, milk consumption, or meat consumption). Only those pathways associated with airborne effluents that are known to exist at a single location are combined to calculate the total maximum exposure to an exposed individual. Pathway doses associated with liquid effluents are combined without regard to any single location but are assumed to be associated with maximum exposure of an individual.

A number of possible exposure pathways to humans are evaluated to determine the impact of routine releases from each nuclear facility on members of the general public living and working outside the site boundaries. A detailed listing of these exposure pathways would include external radiation exposure from the gaseous effluents, inhalation of iodines and particulate contaminants in the air, drinking milk from a cow or goat or eating meat from an animal that grazes on open pasture near the site on which iodines or particulates may be deposited, eating vegetables from a garden near the site (that may be contaminated by similar deposits), and drinking water or eating fish or invertebrates caught near the point of liquid effluent discharge. Other, less important exposure pathways may include external irradiation from surface deposition; eating of animals and crops grown near the site and irrigated with water contaminated by liquid effluents; shoreline, boating, and swimming activities; drinking potentially contaminated water; and direct irradiation from within the plant itself. Calculations for most pathways are limited to a radius of 80 km (50 miles). Beyond 80 km, the doses to individuals are smaller than 0.1 mrem/year, which is far below the average natural-background dose of 300 mrem/year.

For this study, effluent and population dose information was collected from a series of documents that have resulted from ongoing NRC programs. Source-term data (normal effluent releases from nuclear power plants) are assembled annually at Brookhaven National Laboratory (NUREG/CR-2907), and calculations of radiation dose to the public are performed at Pacific Northwest Laboratory. Documentation is given in a series of reports titled *Population Dose Commitments Due to Radioactive Releases from Nuclear Power Plant Sites* (NUREG/CR-2850). The source terms (measured in effluents) are used to estimate dose commitments to those persons assumed to be living in a region between 2 and 80 km (1.2 and 50 miles) from the reactor sites. Atmospheric transport factors (annual average dilution and annual average deposition) were calculated for the region around each site using appropriate meteorological data supplied by either the NRC or the utility. Site-specific parameters other than releases, meteorology, and population were obtained from environmental impact statements or updates in environmental monitoring reports. Parameter values include the total population drinking contaminated water, fish and invertebrate harvest for the region, and dilution factors. For those cases in which site-specific data were not readily available and the particular pathway was not expected to result in a large dose, assumptions intended to be conservative were used to estimate doses. The use of more realistic data should decrease dose estimates in most cases. To this end, each licensee has the opportunity to provide site-specific data. Doses were calculated using models approved by the NRC (NUREG/CR-2850).

3.8.1.3 Risk Estimates from Radiation Exposure

In estimating the health effects resulting from both off-site and occupational radiation exposures as a result of refurbishment of nuclear power facilities, the staff used normal probability coefficients for stochastic effects recommended by the ICRP (ICRP 1991). The coefficients consider the most recent radiobiological and epidemiological information available and are consistent with the United Nations Scientific Committee on the Effects of Atomic Radiation. The coefficients used in this GEIS (Table 3.9) are the same as those recently published by ICRP in connection with a revision of its recommendations (ICRP 1991). Excess hereditary effects are listed separately in this GEIS because radiation-induced effects of this type have not been observed in any human population, as opposed to excess malignancies that have been identified among populations receiving instantaneous and near-uniform exposures in excess of 10 rem. Details regarding the risk of radiation-induced health effects are provided in Appendix E.

Table 3.9 Nominal probability coefficients used in this generic environmental impact statement[a]

Health effect	Occupational	Public
Fatal cancer	4	5
Hereditary	0.6	1

[a]Estimated number of excess effects among 10,000 people receiving 10,000 person-rem. Coefficients are based on "central" or "best" estimates.

Source: ICRP 1991.

3.8.1.4 Baseline Gaseous and Liquid Effluents

Public radiation exposures from gaseous and liquid effluents resulting from refurbishment can be evaluated on the basis of effluent data from the replacement of steam generators and recirculation piping. The projections are based on large refurbishment efforts that have already been performed. Among the past refurbishment efforts, steam generator replacement has been the largest operation at U.S. PWRs. Replacement of the recirculating coolant piping probably represents the largest single effort at BWRs. During the replacement of steam generators and recirculation piping, releases of effluents have taken place under controlled conditions and in accordance with ALARA principles. Similar refurbishment efforts that may occur as part of the license renewal process would also take place under controlled conditions and in accordance with ALARA principles.

For the first several plants to replace steam generators, environmental reports were prepared that estimated amounts of radioactivity expected to occur in liquid and gaseous effluents as a result of the repair (NUREG/CR-3540). Actual effluent measurements were performed in several cases. The values are presented in Table 3.10, along with a summary of the same actual effluent types from BWRs and PWRs for 1986. It should be noted that steam generator repairs took less than a year, typically 6 to 9 months. The 1986 data are used because they represent a mid-level year between the early, post-Three Mile Island (TMI) backfitting and the more recent years that reflect a protracted emphasis on ALARA as well as the completion of the post-TMI backfits. The expected or measured releases from the refurbishments were also compared with (1) the normal operational effluents as predicted in the final environmental statements for the affected plants and (2) measured releases from the normal operation of these few reactors and for all reactors for 1986 as reported in NUREG/CR-2907. For each effluent type, when effluents associated with steam generator replacement are compared with those for normal operation as predicted in the final environmental statements, measured at the specific sites or measured at all LWR sites, they are found to be of the same order as or much less than effluents from normal operation for a year. The replacement of a steam generator does not change a plant's technical specifications relative to accident risk; thus, based on 10 CFR Part 50.59 an environmental assessment is not required. This point, coupled with past experience resulting in small environmental releases associated with steam generator changeouts, suggests that National Environmental Policy Act documents are not likely for future steam generator replacements.

Table 3.10 Radioactive effluent source terms for steam generator replacements compared with typical 1986 effluent data for boiling-water reactors (BWRs) and pressurized-water reactors (PWRs)

Radioactive effluent	Surry[a] measurement (Ci)		Turkey Point[a] measurement (Ci)		Point Beach[b] estimate (Ci/unit)	H. B. Robinson[c] estimate (Ci/unit)	BWRs[d,e] (1986)	PWRs[e] (1986)	BWRs (1990)	PWRs (1990)
	Unit 1	Unit 2	Unit 3	Unit 4						
Gaseous										
Noble gases	510	101	--	875	Negligible	140	53%, 1000[e]	57%, 1000	25%, 1000	23%, 1000
Iodine	0.0033	0.69	--	0.039	0.000007	0.00004	63%, 0.01	26%, 0.01	42%, 0.01[g]	49%, 0.01[g]
Particulates	0.0027	0.0013	0.00021	0.0012	0.00015	0.00009	63%, 0.01	26%, 0.01	--	--
Tritium	4.2	--	--	0.027	Negligible	0.7	--	--	--	--
Liquid										
Mixed fission and activitation products (excluding tritium)	0.52	0.26	0.12	0.078	0.23	0.0013	50%, 0.1	30%, 1.0	47%, 0.1	39%, 1.0
Tritium	8.5[f]	--	--	47	125	14	26%, 10	85%, 100	37%, 100	90%, 100

[a]NUREG/CR-3540.
[b]NUREG-1011.
[c]NUREG-1003.
[d]Adapted from NUREG/CR-2907.
[e]Read as: 53% of the BWR nuclear power reactor sites released annually at least 1000 Ci of noble gases per reactor unit in 1986 (1 Ci = 3.7 x 10^{10} Bq).
[f]Estimated value from NUREG-0692.
[g]Data for the most recent years reported combine iodine and particulates.

Documents comparable to NUREG/CR-2907 estimating anticipated releases to the environment were not identified for BWR recirculation piping replacement, reflecting relatively less concern on the staff's part for effluents from recirculation piping replacement compared with initial concern for steam generator replacement. However, data of a similar nature are obtained from the two series of NRC summary documents, *Radioactive Materials Released from Nuclear Power Plants* (NUREG/CR-2907) and *Population Dose Commitments Due to Radioactive Releases from Nuclear Power Plant Sites* (NUREG/CR-2850). Annual release and dose commitment information for five reactor sites --Cooper, Monticello, Nine Mile Point-1, Peach Bottom-2, and Vermont Yankee--is presented in Table 3.11. Data presented in Table 3.11 demonstrate that releases of radioactive materials during recirculation piping replacement and consequent radiation doses to the public are similar to or less than those resulting from normal operation of the same plants. (Note that Peach Bottom Units 2 and 3 are reported together.) Releases from Peach Bottom Units 2 and 3 are typically larger than those at many other BWRs, although the releases still result in very small radiation doses to the public. This site has the largest releases during recirculation piping replacement. Given that data of Table 3.11 are representative of early technology for the recirculation piping replacement procedure, similar procedures during refurbishment of BWRs related to license renewal are not anticipated to result in significantly larger effluent releases or consequent radiation doses to the public.

Trends for dose reduction in the LWR industry (as seen in Table 4.6) suggest that dose reduction measures are working.

3.8.1.5 Dose to the Public from Radiological Effluents

Section 2.6 and Appendix B consider the scenario and types of potential refurbishment activities that may take place for license renewal. Only the period of major refurbishment is examined here because the potential for release of radioactive materials is greater for the single major refurbishment than for refurbishment in each of the four current term outages.

Detailed estimates of effluents associated with major refurbishment are not available at this time; however, there is a significant data base upon which to assess expected impacts. Major refurbishment efforts have taken place at PWRs and BWRs; associated data are presented in Tables 3.10 and 3.11. Within these tables, it is seen that effluents and dose impacts do not differ significantly from normal operation when a major refurbishment is performed. It is expected that, during the 9-month outage, a greater amount of work will be performed and some of the effluents, especially atmospheric particulates and possibly some liquid effluents associated with decontamination, may be slightly greater than were found during the steam generator changeouts or recirculation piping replacements. However, because of their origins (other effluents, for example), the noble gases and tritium gaseous emissions, which constitute the largest proportion of the total body dose from gaseous effluents to the maximally exposed individual, are not expected to increase beyond levels experienced for the already performed major refurbishments.

Table 3.11 Radioactive effluent releases and radiation doses to the public for boiling-water reactors (BWRs) that have had recirculation piping replaced.

	Liquid releases	Air releases

Year	Net electrical energy (10^6 MWh)	Total outage dates	Tritium (Ci)	Fission and activation products (Ci)	Population dose (person-rem)	I-131 and particulates (Ci)	Fission and activation products (Ci)	Population dose (person-rem)
				Cooper				
1979	5.0		6.6E	<2.5	0.01	<0.18	30000	0.3400
1980	3.8		8.8E	<11	0.02	<0.15	5000	0.0470
1981	3.9		<8.4E	<3.6	0.012	<0.011	2500	0.0540
1982	3.3		<9.1E	<5.4	0.03	<0.16	14000	0.1400
1983	5.3		<7.6E	<12	0.09	<0.023	1500	0.0100
1984	3.5	9/84	<7.2E	<6.3	0.06	<0.012	<1400	0.0100
1985	1.1	8/85	<5.1E	<13	0.06	<0.023	<1400	0.0100
1986	4.1		<5.6E	<7.4	0.03	<0.012	<1700	0.0100
1987	5.5		5.0E	<2.3	0.0081	0.027	1200	0.0003
1988	4.20		4.17	2.3	0.0068	0.0204	1810	0.0049
1989	4.79		5.45	2.19	0.007	0.00526	344	0.0014
1990	5.11		5.07	2.04	0.0029	0.000353	187	0.0012
				Monticello				
1979	4.4		ND[a]	ND	0	0.034	4000	0.1400
1980	3.5		ND	ND	0	0.028	3800	0.1600
1981	3.3		0.0042	0.0000031	0	0.035	3700	0.1800
1982	2.4		0.000027	0.00000058	0	0.089	7200	0.1900
1983	4.2		ND	ND	0	0.041	3200	0.1000
1984	2.6	2/84	ND	ND	0	0.029	520	0.0500
1985	4.3	1/85	ND	ND	0	0.10	2700	0.1400
1986	3.4		ND	ND	0	0.069	2500	0.1000
1987	3.5		ND	ND	0	0.17	4000	0.1700
1988	4.57		ND	ND	0	0.079	5880	0.18
1989	2.65		ND	ND	0	0.114	3980	0.21
1990	4.51		ND	ND	0	0.0434	2960	0.20
				Nine Mile Point 1				
1979	3.0		6.8	1.9	140	0.047	1000	0.0800
1980	4.5		ND	ND	0	0.026	590	0.0400
1981	3.3		5.1	5.4	4.9	0.015	610	0.2500
1982	1.1	8/82	5.8	0.0025	0.01	0.027	51	0.0100
1983	2.8	7/83	7.9	0.011	0.01	0.011	270	0.0400
1984	3.6		ND	ND	0	0.018	1000	0.0300
1985	4.9		ND					
1986	3.2		2.2	<6.7E-4	0.0013	0.018	490	0.0200
1987	4.6		ND	ND	0.49[b]	0.016	200	0.0160
1988	0.0		ND	ND	0.21	0.00189	18	0.0044
1989	0.0		ND	ND	0.026	0.00302	0.000152	0.0067
1990	1.28		1.41	1.95E-3	0.007	0.00272	ND	0.016
				Peach Bottom 2[c]				
1979	15		43.0	2.0E1	16	0.26	190000	14.0000
1980	4.3		37.0	1.9E0	3	0.029	15000	1.7000

1981	6.6		37.0	2.0E0	0.84	<0.042	16000	1.9000
1982	4.8		24.0	9.3E0	3.1	0.039	13000	2.2000
1983	4.5		20.0	2.2E0	1.1	0.046	35000	8.6000
1984	2.4	4/84	36.0	6.2E0	1.1	0.10	81000	8.5000
1985	2.3	6/85	50.0	2.2E0	1.2	0.069	130000	15.0000
1986	6.9		45.0	4.6E-1	0.61	0.052	28000	4.1000
1987	1.6		46.0	3.3E-1	0.47	0.020	12000	1.6000
1988	0.0		9.69	2.02E-1	0.32	0.00150	0.0019	0.014
1989	4.05		20.0	1.13E-1	0.2	0.00345	2640	0.13
1990	14.2		23.5	1.36E-2	0.076	0.0182	11200	0.77
				Vermont Yankee				
1979	3.5		4.0	2.4E-4	0.0021	0.44	<8100	0.4600
1980	3.0		ND	ND	0	0.017	1600	0.0600
1981	3.6		37.0	1.0E-2	0.49	0.0045	<3200	0.1100
1982	4.2		ND	ND	0	0.0015	<3100	0.0600
1983	2.9		ND	ND	0	0.0041	<3100	0.1100
1984	3.3		ND	ND	0	0.0069	<3200	0.1000
1985	3.0	9/85	ND	ND	0	<0.0059	<3400	0.1000
1986	2.1	5/86	ND	ND	0	<0.0013	<1600	0.1200
1987	3.5		ND	ND	0	0.013	ND	0.0160
1988	4.11		ND	ND	0	0.00658	ND	0.059
1989	3.61		ND	ND	0	0.00892	10300	0.69
1990	3.62		ND	ND	0	0.0724	50700	0.16

[a]ND--not detected.

[b]Nine Mile Point--2 began operation in 1987. Radioactive releases are reported separately for units 1 and 2 in NUREG/CR-2907; doses reported are combined for units 1 and 2 in NUREG/CR-2850.

[c]Data for Peach Bottom includes units 2 and 3.

Sources: NUREG/CR-4494; NUREG/CR-2907-V8; NUREG/CR-2850.

The resultant potential impacts on members of the public can be gauged with respect to impacts already experienced. Data tabulated in Appendix E on the maximally exposed individual from routine airborne emissions suggest that from 1985 through 1987, approximately 5 percent of the 47 plants for which data have been tabulated caused in any year annual total body doses of 1 mrem or greater, and approximately 10 percent caused thyroid doses of 1 mrem or greater. Because effluents and doses during periods of accomplished major refurbishment (Tables 3.10 and 3.11) have not been seen to differ significantly from normal operation, gaseous effluents and liquid discharges occurring during the 9-month refurbishment are not expected to result in maximum individual doses exceeding the design objectives of Appendix I to 10 CFR Part 50 or the allowable EPA limits of 40 CFR Part 190.

Within an 80-km (50-mile) radius, the average individual dose, considering all licensed LWRs, for 1985 to 1987 was between 0.001 and 0.002 mrem. If these values were increased a few percent, they would still be small. The average collective dose within an 80-km (50-mile) radius is between 1.0 and 2.0 person-rem (NUREG/CR-2850). For the assumed 9-month period of major refurbishment, these values might be raised slightly. In order to provide a point of comparison, the NCRP estimates that the effective dose equivalent from natural background sources to an individual in the United States is approximately 300 mrem annually. Typically, about 1 million persons are within an 80-km (50-mile) radius of a nuclear facility; this population will annually collect approximately 300,000 person-rem from natural background radiation.

Radiobiologists and epidemiologists generally agree that the collective dose to a population would have to be much larger than current doses from nuclear power plants before health effects would become a realistic concern. In its 1988 report (paragraph 251), the United Nations Scientific Committee on the Effects of Atomic Radiation stated:

The product of risk coefficients appropriate for individual risk and the relevant collective dose will give the expected number of cancer deaths in the exposed population, provided that the collective dose is at least of the order of 100 man-Sv (10,000 person-rem). If the collective dose is only a few man-Sv, the most likely outcome is zero deaths.

In BEIR-V (1990) (p. 181), the National Academy of Sciences' Advisory Committee on the Biological Effects of Ionizing Radiation stated:

Moreover, epidemiologic data cannot rigorously exclude the existence of the threshold in the millisievert [1 mSv is equivalent to 100 mrem] dose range. Thus, the possibility that there may be no risks from exposures comparable to external natural background radiation cannot be ruled out. At such low doses and dose rates, it must be acknowledged that the lower limit on the range of uncertainty in the risk estimates extends to zero.

In the event that small annual radiation doses (i.e., 0.001 mrem/year) contribute to cancer risks, the "best estimate" of cancer risk would be 5×10^{-10}/year. EPA considers that a risk level of 1×10^{-6} to the public provides an ample margin of safety and is an acceptable risk.

3.8.1.6 Dose to the Public from On-Site Storage of Radioactive Materials

Steam generator assemblies, recirculation piping, and other large assemblies may be stored on- site in shielded buildings. Potential doses from such storage can be estimated from information gained by previous experience with steam generators. Each steam generator will contain approximately 300 Ci of fixed gamma emitters at the time it is removed from the containment (NUREG-1003). In past steam generator replacements, storage buildings that housed the removed steam generators and associated equipment provided sufficient shielding to limit the dose rate to less than 1 mrem/h outside the building. Shielding of a similar nature for buildings that may contain more than one steam generator or recirculation piping is anticipated for future refurbishment efforts because of the need to minimize occupational doses. If one of these buildings were 275 m (1500 ft), a typical distance, from the nearest site boundary, the estimated additional dose rate at the site boundary would be less than 0.00001 mrem/h from on-site storage of the steam generators and other equipment. An individual who lived at this location for 1 year would receive less than 0.1 mrem from this source. This dose rate would decrease rapidly during the first 2 years of storage because short-lived radionuclides would decay; thereafter, the dose would decrease by a factor of two every 5 years as the remaining ^{60}Co decayed. The staff concludes that radiation doses to the public from on-site storage of steam generators, recirculation piping, and other assemblies removed during refurbishment would be very small and insignificant.

3.8.1.7 Cumulative Impacts

A perspective on the addition of a radiation burden to members of the U.S. population can be gained from the data presented in Table 3.12. A total average annual effective dose equivalent of 360 mrem/year to members of the U.S. population is contributed by two primary sources: naturally occurring radiation and artificial sources (including human enhancement of natural sources) of radiation. Natural radiation sources other than radon result in 27 percent of the typical radiation dose received. The larger source of radiation dose (55 percent) is from radon, particularly because of homes and other buildings that entrap radon and significantly enhance its dose contribution over open-air living. The remaining 18 percent of the average annual effective dose equivalent consists of radiation from medical procedures (x-ray diagnosis, 11 percent, and nuclear medicine, 4 percent) and from consumer products (3 percent). For consumer products, the chief contributor is radon in domestic water supplies, building materials, mining, and agricultural products, as well as coal burning. (Smokers are additionally exposed to the natural radionuclide ^{210}Po in tobacco, resulting in the irradiation of a small region of the bronchial epithelium to up to 16,000 mrem/year. Tobacco products are the dominant contributor to individual body organ doses, but the conversion of the organ dose to effective dose equivalent is too uncertain for NCRP to include it in its tables. However, NCRP used a weighting factor of 0.08 and

estimated effective dose equivalents to an average smoker of 1,300 mrem/year and to an average member of the U.S. population of 280 mrem/year (NCRP, Report No. 95, 1987). Radiation exposures from occupational activities, nuclear fuel cycle, and miscellaneous environmental sources (including nuclear weapons testing fallout) contribute very insignificantly to the total average effective dose equivalent.

Table 3.12.Average annual effective dose equivalent of ionizing radiations to a member of the U.S. population

	Effective dose equivalent	
Source	**mrem**	**Percent of total**
Natural		
Cosmic	27	8.0
Terrestrial	28	8.0
Internal	39	11
Total natural	94	27
Artificial		
Radon (human enhanced)	200	55
Medical		
X-ray diagnosis	39	11
Nuclear medicine	14	4
Consumer products	11	3
Other		
Occupational	0.9	< 0.3
Nuclear fuel cycle	< 1.0	< 0.03
Fallout	< 1.0	< 0.03
Miscellaneous	< 1.0	< 0.03
Total artificial	266	73
Total natural and artificial	360	100

Source: Adapted from NCRP (1987).

Activities at nuclear power stations can be considered to contribute to the cumulative radiation burden. During the major period of refurbishment, radiation dose to members of the public within a 50-mile radius are not expected to change significantly from the current-term conditions which were between 0.001 and 0.002 mrem/year during 1985-1987, and even lower in the most recent reporting year. In 1990, the average dose was 0.0005 mrem/year. During refurbishment, the average dose to the public will remain very small, probably unchanged from current operation which, according to the most recent year analyzed, is less than 0.001 mrem/year. Therefore, cumulative impacts of radiation dose to members of the public should remain a very small part (less than 0.0003 percent) of the ionizing radiation dose to an average member of the U.S. population.

3.8.1.8 Mitigation

Radiation exposures to the public have been examined for potential mitigation, based on findings of impacts during the refurbishment effort. Adequate mitigation is already in place and properly functioning: the preceding sections demonstrate that public radiation doses have been steadily decreasing over nearly two decades.

The basis for current mitigation is found in the Code of Federal Regulations governing nuclear power plants. For example, in 10 CFR Part 20.1101 (radiation protection programs), specific requirements are detailed:

(a) Each licensee shall develop, document, and implement a radiation protection program commensurate with the scope and extent of licensed activities and sufficient to ensure compliance with the provisions of this part (see Section 20.2102 for recordkeeping requirements relating to these programs).

(b) The licensee shall use, to the extent practicable, procedures and engineering controls based upon sound radiation protection principles to achieve occupational doses and doses to members of the public that are ALARA.
(c) The licensee shall periodically (at least annually) review the radiation protection program content and implementation.

Regulations under which licensees of nuclear power plants operate explicitly require that attention be made to reducing public radiation exposures. Evidence is provided in Tables 3.10 and 3.11 as well as in the text of Sections 2 and 3 and in Appendices B and E to demonstrate that major refurbishment efforts taken during the current term of operation have operated under ALARA principles. Refurbishment activities that will take place in anticipation of license renewal can also be expected to comply with federal regulations in minimizing radiation dose.

Because of the existing federal regulations requiring operation under ALARA principles, and the historical record demonstrating that the regulations are being followed and are effective, ample evidence is provided that adequate mitigation for radiation exposure is already in place for major refurbishment activities and additional mitigation requirements are not warranted.

3.8.1.9 Conclusions

Off-site doses to the public attributable to refurbishment have been examined for both the maximally exposed individual and the typical or average individual. Because the focus of the analysis is on annual dose, only the results based on the assumed 9-month refurbishment outage were examined. In each instance, impacts were found to be small. To date, effluents and doses during periods of major refurbishments have not been seen to differ significantly from normal operation. Consequently, gaseous effluents and liquid discharges occurring during the 9-month refurbishment are not expected to result in maximum individual doses exceeding the design objectives of Appendix I to 10 CFR Part 50 or the allowable EPA limits of 40 CFR Part 190. Both the average individual dose and the 80-km (50-mile) radius collective doses will remain approximately 100,000 times less than the dose from natural background radiation. The evaluation of off-site radiation doses attributable to refurbishment determined that their significance is small for all nuclear plants. Radiation impacts to the public are considered to be of small significance because public exposures are within regulatory limits. It should also be noted that the estimated cancer risk is to the average member of the public is much less than 1×10^{-6}. Because current mitigation practices are properly functioning, cumulative impacts would not be significantly increased by refurbishment. Because current mitigation practices have resulted in declining public radiation doses for nearly two decades, additional mitigation is not warranted. The impact on human health is a Category 1 issue.

3.8.2 Occupational Dose

To determine the significance of the estimated occupational dose for refurbishment, the staff has compared dose projections for refurbishment with the historical (baseline) doses experienced at PWRs and BWRs. The dose estimates are based on detailed investigations of major refurbishment or replacement activities. Projected doses were used as the basis for estimates of cancer and genetic risk. Finally, the staff has compared the estimated risk to nuclear power plant workers with the risks to those workers from exposure to naturally occurring radiation and with published risks for other occupations. For the purpose of assessing radiological impacts to workers, the Commission has concluded that impacts are of small significance if doses and releases do not exceed permissible levels in the Commission's regulations. The standards for acceptable dose limits are given in 10 CFR Part 20.

Throughout the nuclear power industry, construction-type activities have continued at each operating plant but at greatly reduced levels compared with the original plant construction. These construction activities have included a broad range of plant modifications and additions made in response to a number of NRC requirements and industry initiatives, including post-TMI upgrades, radioactive waste system modifications, and spent fuel storage upgrades. In addition, several nuclear power plants have experienced major refurbishment efforts such as PWR steam generator replacement and the replacement of coolant recirculation piping in BWRs. These activities had significant potential for occupational exposure. Thus, occupational exposure histories accumulated to date are reflective of normal operation

plus modifications and additions to existing systems. This information forms the basis for the evaluation of occupational doses resulting from refurbishment associated with license renewal.

3.8.2.1 Baseline Occupational Exposure

Table 3.13 shows the occupational dose history for PWRs and BWRs. Average collective occupational dose information and average annual individual worker doses are presented for those plants operating between 1974 and 1992. The year 1974 was chosen as a starting date because the dose data for years before 1974 are primarily from reactors with average rated capacities below 500 MW(e). Since the early 1980s, when the majority of post-TMI plant modifications were completed, there has been a decreasing trend in the average collective occupational dose. The average collective doses, however, are based on widely varying yearly doses. For example, between 1974 and 1992, annual collective doses for operating PWRs have ranged from 13 to 3223 person-rem; for operating BWRs, the figures range from 53 to 4083 person-rem. A decreasing trend in the highest annual collective dose is somewhat apparent, as is that for the average collective dose. In addition to decreases in collective dose, the average annual dose per nuclear plant worker has been reduced during this period from somewhat more than 0.8 rem to about 0.3 rem for BWRs and from around 0.7 rem to less than 0.3 rem for PWRs. A breakdown of the number of individual workers receiving doses in different ranges for 1992 is provided in Table E.8. These data demonstrate that 94 percent of plant radiation workers received less than 1 rem, and no worker received more than 4 rem. Overall data presented in Table 3.13 and in Appendix E provide ample evidence that doses to nearly all radiation workers are far below the worker dose limit established by 10 CFR Part 20 and that the continuing efforts to maintain doses at ALARA levels have been successful. A portion of the total work force can be defined as "transient." These individuals are usually employed for special functions and may be employed at multiple reactor sites during a given year. Data for individual reactors described earlier include these people, but only for each power plant. Thus some people are counted more than once and some people receive greater annual doses than are reported by individual plants. In 1993 there were approximately 13,000 of these people (NUREG-0713 1995). Over the years, doses to transient workers have been decreasing in the same way as doses to more permanent workers at nuclear power plants, going from an average of 1.04 rem in 1984 to 0.49 rem in 1993 (NUREG-0713 1995). In 1993 four transient workers received whole body doses between 4 and 5 rem, and no individuals received more than 5 rem (NUREG-0713 1995).

Table 3.13 Annual average occupational dose for U.S. licensed light-water reactors
Reported collective occupational dose (person-rem)

	BWR[a]			PWR[b]			Annual average whole-body dose (rem)	
Year	**Low**	**Average**	**High**	**Low**	**Average**	**High**	**BWR**	**PWR**
1974	139	507	1430	18	345	1225	0.81	0.70
1975	114	701	2022	21	318	1142	0.86	0.76
1976	105	559	2468	58	460	1583	0.74	0.79
1977	198	828	3142	87	396	1153	0.89	0.65
1978	158	611	1327	48	424	1621	0.75	0.64
1979	157	733	1793	30	516	1792	0.73	0.56
1980	218	1136	3626	154	578	2387	0.87	0.52
1981	123	980	1836	58	652	3223	0.73	0.61
1982	205	940	1896	101	578	1426	0.76	0.53
1983	121	1056	2257	68	592	1881	0.82	0.56
1984	155	1004	4082	49	552	2880	0.66	0.49
1985	119	709	1677	36	424	1581	0.54	0.41
1986	84	645	2436	23	384	1567	0.51	0.37
1987	103	622	1579	47	370	1217	0.40	0.38
1988	53	529	1504	27	335	917	0.45	0.36

1989	177	432	910	18	287	1436	0.35	0.32
1990	83	426	884	13	285	1678	0.38	0.31
1991	103	324	1185	21	223	1468	0.31	0.27
1992	81	360	710	19	219	1280	0.32	0.26

[a]BWR = boiling-water reactor.
[b]PWR = pressurized-water reactor.

Source: NUREG-0713.

The wide range of annual collective doses experienced at LWRs in the United States results from a number of factors such as the reactor design, the amount of required maintenance, and the amount of reactor operations and in-plant surveillance. Because these factors can vary widely and unpredictably, it is impossible to determine in advance a specific year-to-year annual occupational radiation dose for a particular plant throughout its operating lifetime. On occasion, there may be a need for relatively high collective occupational doses compared with the average annual collective dose, even at plants with radiation protection programs designed to ensure that occupational doses will be kept to ALARA levels.

3.8.2.2 Projected Doses During Refurbishment

Many nuclear power plant operators have accrued considerable experience with the types of refurbishment activities that will be associated with license renewal. On the average, utilities have spent approximately $140 million per plant in modifications, and experience in retrofitting and modifying operating reactors has been gained. The level of effort required to support large construction activities such as a steam generator replacement has involved, for example, from 200,000 to 900,000 person-hours. The duration of shutdown has lasted from about 8 months to 2 years. Less complex modifications have required fewer person-hours and less plant downtime. Personnel who perform the modifications have often worked in relatively high radiation fields. Component surface exposure rates range from a few hundred mrem per hour to several rem per hour. The resulting cumulative radiation exposure to the work force has ranged from about 300 to 3500 person-rem for large, complex modifications and from 2 to 100 person-rem for smaller ones.

Throughout the process of plant modifications, it has been routine industrial practice to conduct ALARA reviews and studies on projects that may involve significant personnel exposures. Such evaluations are intended to assist the engineering of systems or implement radiological work practices that will reduce personnel exposures. Nonetheless, it is anticipated that each refurbishment program will result in occupational radiation doses in addition to those expected from normal operation during that time period.

Two scenarios were developed to estimate the occupational radiation doses caused by refurbishment activities: (1) a typical scenario that is expected in most situations and (2) a conservative scenario that is intended to capture additional work that might occur for those outlier plants whose impacts will be considerably greater than what is typical of the reactor population as a whole (see Section 2.6 and Appendix B). Care was taken to ensure that the dose estimates were conservative. The scenarios include work done in support of refurbishment during four current-term outages plus a single period of major refurbishment. Dose estimates for activities during each of the four current-term refurbishment outages are 11 and 10 person-rem for PWRs and BWRs respectively for the typical case and 200 and 191 person-rem respectively for the conservative case (see Tables 2.8 and 2.11). Dose estimates for the assumed single periods of major refurbishment are 79 and 153 person-rem for PWRs and BWRs respectively for the typical case and 1380 and 1561 for person-rem respectively for the conservative case.

3.8.2.3 Analysis of Occupational Exposures

According to the scenario developed in Appendix B, refurbishment efforts expended during the current licensing term are to take place during four outages plus a single large outage devoted to major items. Doses to power plant workers will, accordingly, take place during five time periods. Under the conservative scenario, the projected 200 to 191 person

-rem for each of the four current term outages could increase the average annual collective dose during that period (based on 1992 numbers; see Table 3.13) from the range of 219 to 360 person-rem to the range of 419 to 551 person-rem for PWRs and BWRs respectively. These doses are similar to the average collective dose that was experienced by all LWRs during the second half of the 1980s. Under the typical scenario, the occupational doses would increase by less than 5 percent for both reactor types.

The single large outage effort in the conservative refurbishment scenario is estimated to result in a single-year increase in collective occupational dose (based on 1992 numbers) from 219 to 1599 person-rem for PWRs and from 360 to 1921 person-rem for BWRs. These levels are above the average of all reactors for any given year during the 1980s but are well below the levels for the highest single years for most BWRs and some PWRs (NUREG-0713). Thus the anticipated collective occupational doses attributable to refurbishment under the conservative scenario are in the range of doses already experienced by a large portion of the nuclear power plant industry. Under the typical scenario, the single large outage would add less than 7 percent to the current annual occupational doses.

During the large refurbishment outage, even in the conservative case, it is anticipated that average individual occupational doses will be maintained at acceptable levels. Experience during the early 1980s, when considerable backfitting was being performed within the industry, has shown that average worker doses could be kept to about 0.8 rem (NUREG-0713). Average worker doses are now in the 0.3-0.4 rem range. Because many activities in the 1980s were the same or similar to those expected to be performed in the refurbishment related to license renewal, it is estimated that such work can be performed while maintaining radiation protection to the degree achieved during the 1980s. On that basis, the NRC staff has compared the risks associated with the range of 0.4-0.8 rem to published risks associated with other occupations (Table 3.14). In this table, only nuclear plant workers are given the added chronic risk resulting from occupational exposures. Thus the risk for this category of workers is inflated by the theoretical calculations. There are three entries in Table 3.14 for nuclear power plant workers: using an annual average dose of 0.8 rem in conjunction with the "best estimate" cancer risk estimator; using an annual average dose of 0.4 rem in conjunction with the "best estimate" cancer risk estimator; and using the lower limit risk cancer estimator for both 0.8 and 0.4 rem.

During the 1980s, the average annual worker doses were reduced by a factor of two, from 0.8 to 0.4 rem (Table 3.13). Part of the reduction has resulted from the completion of backfitting work and part has resulted from improvements in radiation protection (ALARA) programs. The precise average annual worker doses that will accompany refurbishment are not known at present but are anticipated to be between 0.8 and 0.4 rem. This dose range puts nuclear power plant workers in the mid-range of job-related mortality incidence (Table 3.14). The actual cancer incidence as a result of radiation exposures at such low rates (i.e., two to three times natural background radiation) may be zero (NAS 1990). As a consequence, the actual occupational risk for nuclear plant workers may be in the lower part of the mortality incidence table. On the basis of these comparisons, the staff concludes that the risk to nuclear plant workers from refurbishment efforts associated with license renewal is comparable to the risks associated with other occupations.

The staff has examined the cumulative effects of occupational exposures during refurbishment activities under the conservative scenario. These effects are based on the dose estimate for BWRs (Appendix B) as an upper bound. A total of 2000-4000 persons are expected to compose the refurbishment work force if average annual individual doses are maintained at 0.4 to 0.8 rem. The risk of potentially fatal cancers in the exposed refurbishment work force population at a typical site and the risk of potential genetic disorders in all future generations of this refurbishment work force are estimated as follows: multiplying the estimated cumulative dose of 2325 person-rem (4 x 191 person-rem + 1561 person-rem) by the limit of the risk coefficients described earlier (Section 3.8.1.3 and Table 3.9), the staff estimates that between zero and one additional cancer death could occur in the total exposed refurbishment population for a given power plant. The magnitude of this risk estimate can be understood by comparing it with the current incidence of cancer deaths. Multiplying the estimated exposed worker population of 2000 to 4000 persons by the current incidence of actual cancer fatalities (20 percent), about 400 to 800 cancer deaths are expected in this population from causes other than occupational radiation exposure (American Cancer Society 1994).

The risk estimate of 0.1 genetic disorder to the progeny of the exposed refurbishment work-force population is roughly 5 million times less than the risk estimates of natural incidence of actual genetic ill health of about 500,000 expected for the same progeny. Because the risk is borne by the progeny of the entire population, it is thus properly considered as part of the risk to the general public. BEIR-III (1980) indicates that the mean persistence of the two major types of genetic disorders are about five generations and ten generations respectively. The risk of potential genetic disorders from refurbishment is conservatively compared with the risk of actual genetic ill health in the first five generations, rather than the first ten generations. Multiplying an assumed population of 1 million persons in the vicinity of the plant by the current incidence of actual genetic ill health in each generation (11 percent) yields an estimate that about 500,000 genetic abnormalities are expected in the first five generations of this population.

Table 3.14 Incidence of job-related mortalities[a]

Occupational group	Mortality rates (premature deaths per 10^5 person-years)
Underground metal miners[b]	~1300
Uranium workers[b]	420
Smelter workers[b]	190
Nuclear-plant workers (early 1980s)[d]	44
Agriculture, forestry, and fisheries[c]	35
Mining, quarrying[c]	33
Nuclear-plant workers (1992)[e]	24
Construction[c]	22
Transportation and public utilities[c]	20
Nuclear-plant workers[f]	12
Government[c]	11
Wholesale and retail trade[c]	5
Manufacturing[c]	4
Services[c]	3

[a]Mortality incidences in this table do not include occupational diseases except for the hypothetical cancer incidence in nuclear plant workers.

[b]U.S. Department of Health, Education, and Welfare 1972.

[c]*Accident Facts* 1994 Edition, National Safety Council.

[d]The nuclear-plant worker's risk is equal to the sum of the radiation-related risk and the non-radiation-related risk. The estimated occupational risk associated with an average radiation dose of 0.8 rem is about 32 potential premature deaths per 10^5 person-years resulting from cancer, based on the ICRP 60 "best estimate" risk estimator of 4×10^{-4}/rem (ICRP 1991). The average non-radiation-related risk for seven U.S. electrical utilities during the 1970-79 period was about 12 actual premature deaths per 10^5 person-years, as shown in Figure 5 of Wilson and Koehl. (Note that the estimate of 32 radiation-related premature cancer deaths describes potential risk rather than an observed statistic. The lower confidence limit is zero.)

[e]The average worker dose in 1992 was approximately 0.3 rem. Using the "best estimate" risk estimator, about 12 premature deaths per 10^5 person-years are expected. Also, 12 actual premature deaths are caused by nonradiological causes typical of electrical utilities (see footnote *c*). The lower confidence limit is zero.

[f]Using the lower confidence limit for the risk estimate, no deaths from occupational radiation exposures are anticipated and the mortality incidence results totally from nonradiological causes typical of electrical utilities.

Source: Adapted from Wilson and Koehl (1980).

3.8.2.4 Cumulative Impacts

Currently, occupational radiation doses are on the order of 0.4 rem/year in addition to the 0.36 rem/year received by the typical U.S. resident. The cumulative impact of the estimated exposures due to refurbishment would be to increase average occupational radiation exposures for those involved from 0.76 rem to 0.79 rem for the year that includes the 9-month refurbishment period.

3.8.2.5 Conclusions

Occupational doses from refurbishment activities associated with license renewal (including current-term outages and the assumed single large outage) are estimated to be less than 1 percent of regulatory dose limits. The average individual exposures for refurbishment are expected to remain roughly the same as they have been during the last decade, within the middle zone of the occupations examined. The "best estimate" cancer risk due to refurbishment, 1×10^{-5}, is less than 10 percent of the ongoing annual occupational risk of 1.6×10^{-4} and less than 1 percent of the lifetime accumulation of occupational risk of 4.8×10^{-3}. Occupational radiation exposure during refurbishment meets the standard of small significance. Because the ALARA program continues to reduce occupational doses, no additional mitigation program is warranted. This is a Category 1 issue.

3.9 Threatened and Endangered Species

[**Prev** | **Next** | **Table of Contents**]

Potential impacts of refurbishment on federal- or state-listed threatened and endangered species, and species proposed to be listed as threatened or endangered, cannot be assessed generically because the status of many species is being reviewed and it is impossible to know what species that are threatened with extinction may be identified that could be affected by refurbishment activities. In accordance with the Endangered Species Act of 1973 (Pub. L. 93-205), the appropriate federal agency (either the U.S. Fish and Wildlife Service or the National Marine Fisheries Service) must be consulted about the presence of threatened or endangered species. At that time, it will be determined whether such species could be affected by refurbishment activities and whether formal consultation will be required to address the impacts. Each state should be consulted about its own procedures for considering impacts to state-listed species. Because compliance with the Endangered Species Act cannot be assessed without site-specific consideration of potential effects on threatened and endangered species, it is not possible to determine generically the significance of potential impacts to threatened and endangered species. This is a Category 2 issue.

3.10 Summary of Impacts of Refurbishment

[**Prev** | **Next** | **Table of Contents**]

The following conclusions have been drawn with regard to the impacts of refurbishment.

On-Site Land Use

- On-site land use impacts are expected to be of small significance at all sites. Temporary disturbance of land may be mitigated by restoration to its original condition after refurbishment. This is a Category 1 issue.

Air Quality

- Nuclear power plant atmospheric emissions would either remain constant during refurbishment or decrease if the plant were partially or totally shut down. Small quantities of fugitive dust and gaseous exhaust emissions from motorized equipment operation during construction and refurbishment would temporarily increase ambient concentrations of particulate matter and gaseous pollutants in the vicinity of the activity but would not be expected to measurably affect ambient concentrations of regulated pollutants off-site. Additional exhaust emissions from the

vehicles of up to 2300 personnel could be cause for some concern in geographical areas of poor or marginal air quality, but a general conclusion about the significance of the potential impact cannot be drawn without considering the compliance status of each site and the numbers of workers to be employed during the outage. This is a Category 2 issue.

Surface Water Quality and Use

- Proven erosion control measures such as best management practices are expected to be implemented at all plants and to minimize impacts to local water quality from runoff in disturbed areas. Consequently, impacts of refurbishment on surface water quality are expected to be of small significance at all plants. Because the effects of refurbishment are considered to be of small significance and potential mitigation measures are likely to be costly, the staff does not consider implementation of mitigation measures beyond best management practices to be warranted. This is a Category 1 issue.
- Additional water requirements during construction and refurbishment would be a small fraction of cooling water requirements of the operating power plant. If the plant is partially or totally shut down, cooling water use would decline. Water use during refurbishment is expected to have impacts of small significance on the local water supply. The only potential mitigation for any increase in water consumption would be to acquire the additional water from some other source. However, because this approach would provide very little, if any, environmental benefit and would be costly, the staff does not consider implementation of additional mitigation to be warranted. This is a Category 1 issue.

Groundwater

- Deep excavations and site dewatering would not be required during refurbishment. Consequently, the impacts of refurbishment on groundwater would be of small significance at all sites. No additional mitigation measures would be warranted because there would be no adverse impacts to mitigate. This is a Category 1 issue.

Aquatic Ecology

- Effluent discharges from the cooling system of a nuclear power plant would either remain constant during refurbishment or decrease if the plant were partially or totally shut down. Effects of changes in water withdrawals and discharges during refurbishment would be of small significance. No additional mitigation measures beyond those implemented during the current license term would be warranted because there would be no adverse impacts to mitigate. This is a Category 1 issue.

Terrestrial Ecology

- The small on-site change in land use associated with refurbishment and construction could disturb or eliminate a small area of terrestrial habitat [up to 4 ha (10 acres)]. The significance of the loss of habitat depends on the importance of the plant or animal species that are displaced and on the availability of nearby replacement habitat. Impacts would be potentially significant only if they involved wetlands, staging or resting areas for large numbers of waterfowl, rookeries, restricted wintering areas for wildlife, communal roost sites, strutting or breeding grounds for gallinaceous birds, or rare plant community types. Because ecological impacts cannot be determined without considering site- and project-specific details, the potential significance of those impacts cannot be determined generically. This is a Category 2 issue.

Socioeconomics

- Because of refurbishment-related population increases, impacts on housing could be of moderate or large significance at sites located in rural and remote areas, at sites located in areas that have experienced extremely slow population growth (and thus slow or no growth in housing), or where growth control measures that limit housing development are in existence of have recently been lifted. This is a Category 2 issue.

- Tax impacts, which involve small to moderate increases in the direct and indirect tax revenues paid to local jurisdictions, are considered beneficial in all cases.
- In the area of public services, in-migrating workers could induce impacts of small to large significance to education, with the larger impacts expected to occur in sparsely populated areas. Impacts of small to moderate significance may occur to public utilities at some sites. Transportation impacts could be of large significance at some sites. These socioeconomic issues are Category 2.
- The impacts of refurbishment on other public services (public safety, social services, and tourism and recreation) are expected to be of small significance at all sites. No additional mitigation measures beyond those implemented during the current license term would be warranted because mitigation would be costly and the benefits would be small. These are Category 1 issues.
- In-migrating workers could induce impacts of small to moderate significance to off-site land use, and the larger impacts are expected to occur in sparsely populated areas. This is a Category 2 issue.
- Based on the findings at the case study sites, refurbishment-related economic effects would range from small benefits to moderate benefits at all nuclear power plant sites. No adverse effects to economic structure would result from refurbishment-related employment.
- Site-specific identification of historic and archaeological resources and determination of impacts to them must occur during the consultation process with the SHPO as mandated by the National Historic Preservation Act. Impacts to historic resources could be large if the SHPO determines that significant historic resources would be disturbed or their historic character would be altered by plant refurbishment activities. The significance of potential impacts to historic and archaeological resources cannot be determined generically. This is a Category 2 issue.
- The impact on aesthetic resources is found to be of small significance at all sites. Because there will be no readily noticeable visual intrusion, consideration of mitigation is not warranted. This is a Category 1 issue.

Radiological Impacts

- Radiation impacts to the public are considered to be of small significance because public exposures are within regulatory limits. Also, the estimated cancer risk to the average member of the public is much less than 1×10^{-6}. Because current mitigation practices have resulted in declining public radiation doses for nearly two decades, additional mitigation is not warranted. The impact on human health is a Category 1 issue.
- Occupational radiation exposure during refurbishment meets the standard of small significance. Because the ALARA program continues to reduce occupational doses, no additional mitigation program is warranted. This is a Category 1 issue.

Threatened and Endangered Species

- The significance of potential impacts to threatened and endangered species cannot be determined generically because compliance with the Endangered Species Act cannot be assessed without site-specific consideration of potential effects on threatened and endangered species. This is a Category 2 issue.

3.11 Endnotes

[**Prev** | **Next** | **Table of Contents**]

The PWR conservative work force number used in this analysis is taken from a work force estimate provided by Science and Engineering Associates, Inc. (SEA), that differs slightly from SEA's work force estimate discussed in Chapter 2 and Appendix B. The slight difference would not affect the conclusions.
The BWR conservative and typical work force numbers used in this analysis are taken from a work force estimate provided by Science and Engineering Associates, Inc. (SEA), that differs slightly from SEA's work force estimate discussed in Chapter 2 and Appendix B. The slight difference would not affect the conclusions.

3.12 References

American Cancer Society, *Cancer Facts and Figures, 1994*, American Cancer Society, Atlanta, 1994.

BEIR-III, *The Effects on Populations of Exposure to Low Levels of Ionizing Radiation: 1980*, National Research Council, Advisory Committee on the Biological Effects of Ionizing Radiation, National Academy of Sciences, Washington, D.C., 1980.

BEIR-V, *Health Effects of Exposure to Low Levels of Ionizing Radiation*, National Research Council, Advisory Committee on the Biological Effects of Ionizing Radiation, National Academy of Sciences, Washington, D.C., 1990.

ICRP (International Commission on Radiological Protection), ICRP 26, "Recommendations of the International Commission on Radiological Protection," *Annals of the ICRP* **1**(3), International Commission on Radiological Protection, Pergamon Press, New York, 1977.

ICRP (International Commission on Radiological Protection), ICRP 60 1990, *Recommendations of the International Commission on Radiological Protection*, Pergamon Press, Oxford 1991.

NAS (National Academy of Sciences), *Health Effects of Exposure to Low Levels of Ionizing Radiation*, National Research Council, Advisory Committee on the Biological Effects of Ionizing Radiation, Washington, D.C., 1990.

National Safety Council, *Accident Facts*, 1994.

NCRP (National Council on Radiation Protection and Measurements), *Recommendations on Limits for Exposure to Ionizing Radiation*, Report No. 91, Bethesda, Maryland, 1987.

NUREG-0692, *Final Environmental Statement Related to Steam Generator Repair of Surry Power Station, Unit No. 1, Virginia Electric and Power Company*, U.S. Nuclear Regulatory Commission, July 1980.

NUREG-0713, C. T. Raddatz and D. Hagemeyer, *Occupational Radiation Exposure at Commercial Nuclear Power Reactors and Other Facilities, 1992*, U.S. Nuclear Regulatory Commission, December 1993.

NUREG-0713, C. T. Raddatz and D. Hagemeyer, *Occupational Radiation Exposure at Commercial Nuclear Power Reactors and Other Facilities, 1993*, U.S. Nuclear Regulatory Commission, January 1995.

NUREG-1003, *Final Environmental Statement Related to Steam Generator Repair at H. B. Robinson Steam Electric Plant, Unit No. 2*, U.S. Nuclear Regulatory Commission, November 1983.

NUREG-1011, *Final Environmental Statement Related to Steam Generator Repair at Point Beach Nuclear Plant, Unit No. 1*, U.S. Nuclear Regulatory Commission, Office of Nuclear Reactor Regulation, September 1983.

NUREG/CR-2850, D. A. Baker, *Population Dose Commitments Due to Radioactive Releases from Nuclear Power Plant Sites in 1989*, prepared by Battelle, Pacific Northwest Laboratories, Richland, Washington, for the U.S. Nuclear Regulatory Commission, February 1993.

NUREG/CR-2907, J. Tichler, et al., *Radioactive Materials Released from Nuclear Power Plants, Annual Report 1990*, prepared by Brookhaven National Laboratory, Upton, New York, for the U.S. Nuclear Regulatory Commission, October 1993.

NUREG/CR-3540, M. A. Parkhurst, et al., *Radiological Assessment of Steam Generator Repair and Replacement*, U.S. Nuclear Regulatory Commission, December 1983.

NUREG/CR-4494, M. A. Parkhurst, et al., *Radiological Assessment of BWR Recirculatory Pipe Replacement*, U.S. Nuclear Regulatory Commission, February 1986.

SEA (Science and Engineering Associates, Inc.), *Impact Driver Definition for Nuclear Plant License Renewal Generic Environmental Study, Draft Report*, prepared by SEA, Albuquerque, New Mexico, for the U.S. Nuclear Regulatory Commission, August 1995.

Transportation Research Board, *Highway Capacity Manual*, Special Report 209, National Research Council, Washington, D.C., 1985.

UNSCEAR (United Nations Scientific Committee on the Effects of Atomic Radiation), *Sources, Effects and Risk of Ionizing Radiation: 1988 Report to the General Assembly, Forty-third Session*, Supplement No. 45 (A/43/45), United Nations, New York, 1988.

U.S. Department of Health, Education, and Welfare, "Report on Occupational Safety and Health by the U.S. Department of Health, Education, and Welfare," *The President's Report on Occupational Safety and Health*, E. L. Richardson, Secretary, Department of Health, Education, and Welfare.

Wilson, R., and E. S. Koehl, "Occupational Risks of Ontario Hydro's Atomic Radiation Workers in Perspective," presented in "Nuclear Radiation Risks: A Utility-Medical Dialog," a conference sponsored by the International Institute of Safety and Health in Washington, D.C., September 22-23, 1980.

Page Last Reviewed/Updated Sunday, March 13, 2011

©2000- 2011 NRC

Generic Environmental Impact Statement for License Renewal of Nuclear Plants (NUREG-1437 Vol. 1)

4. Environmental Impacts of Operation

[**Prev** | **Next** | **Table of Contents**]

4.1 Introduction

[**Prev** | **Next** | **Table of Contents**]

Nuclear power plant operations during the license renewal term will result in a continuation of most of the impacts that were occurring prior to license renewal. Some operational procedures will change, however, in response to efficiency, reliability, and safety goals. These new procedures may result in a new baseline of plant-induced impacts that will continue throughout the license renewal term. In addition, the environmental receptors such as air, water, population, and biotic communities may be changing. These receptor changes in turn will influence the significance of any plant-induced impacts. Therefore, this chapter defines the prelicense-renewal baseline for plant-induced impacts and additional impacts due to a changing environment, refurbishment, and changes in plant operation.

It is the intent of this chapter to discuss all substantive issues of concern that were identified in the scoping process (Section 1.3). This chapter is organized according to the major modes by which nuclear power plants affect the environment. Because the cooling system is a major mode of interaction with the environment and because the three types of cooling systems have substantially different effects, the first three sections address the impacts of operation for each of the three cooling system types. Transmission lines have distinctly different effects from cooling systems, so they are discussed separately in Section 4.5. Operation of nuclear power plants also has potential human health, socioeconomic, and groundwater effects that are not closely related to either the cooling system or the transmission lines. These effects are discussed in Sections 4.6, 4.7, and 4.8.

The issue of impacts to threatened or endangered species is potentially relevant to all cooling system types and to transmission lines. Review of power plant operations has shown that neither current cooling system operations nor electric power transmission lines associated with nuclear power plants are having significant adverse impacts on any threatened or endangered species. However, widespread conversion of natural habitats and other human activities continues to cause the decline of native plants and animals. As biologists review the status of species, additional species threatened with extinction are being identified; consequently, it is not possible to ensure that future power plant operations will not be found to adversely affect some currently unrecognized threatened or endangered species. In addition, future endangered species recovery efforts may require modifications of power plant operations. Similarly, operations-related land-disturbing activities (e.g., spent fuel and low-level waste storage facilities) could affect endangered species. As noted in Section 3.2, without site-specific and project-specific information, the magnitude or significance of impacts on threatened and endangered species cannot be assessed. For these reasons, the nature and significance of nuclear power plant operations on as yet unrecognized endangered species cannot be predicted; and no generic conclusion on the significance of potential impacts on endangered species can be reached. The impact on threatened and endangered species, therefore, is a Category 2 issue and will not be discussed further in this chapter.

4.2 Once-Through Cooling Systems

A once-through cooling system can affect the environment by withdrawing a large amount of water, heating it, adding biocides, and discharging it back to the receiving body. The main issues associated with plants using such a system are (1) effects on aquatic organisms due to changes in water quality, entrainment, and impingement; (2) water-use conflicts; and (3) effects on groundwater quality, hydrology, and use. These issues as they relate to license renewal are addressed in this section.

The following sections discuss the potential effects of operation of once-through condenser cooling systems on surface water quality, hydrology, and use (Section 4.2.1) and aquatic ecology (Section 4.2.2). Section 4.2.2.2 summarizes the conclusions for each of these issues.

4.2.1 Surface Water Quality, Hydrology, and Use

This section considers how once-through cooling systems may alter surface water quality, hydrology, and quantity; the consequent biological effects of such changes and the methodology used to arrive at conclusions are described in Section 4.2.2. Each issue is described and, as appropriate, illustrated with examples from operating nuclear power plants. Any ongoing effects will probably continue into the license renewal term, assuming that the cooling system design and operation will not change for any plant under the requirements for license renewal. Judgments about the significance of these issues during the license renewal term are based on published information, agency consultation, and information provided by the utilities (Appendix F) on every nuclear power plant in the United States. The conclusions reached in Section 4.2.1 apply to all nuclear power plants with once-through cooling systems.

Seventy nuclear power plants have a once-through cooling system (see Table 2.2). The operation of once-through cooling systems alters water quality primarily through the discharge of heat and chemicals to a receiving body of water. The largest volumes of discharge are associated with the main condenser cooling system, but there are other sources of liquid effluents (e.g., the service water system and sanitary wastes). Because the volumes of water discharged from other systems are relatively small compared with those of the once-through condenser cooling system (typically around 10 percent), concern about water quality impacts of discharges has generally focused on the condenser cooling system. The amounts of heated effluent from such a system can be large; a nuclear power plant with once-through cooling discharges water at about 46 m^3/s (736,000 gal/min) per 1000 MW(e) with a temperature increase of 10°C (18°F).

4.2.1.1 Regulation of Condenser Cooling System Effluents

The U.S. Nuclear Regulatory Commission (NRC) considered the costs and benefits of alternative condenser cooling systems (including potential impacts on water quality and aquatic ecology) in the environmental statements associated with issuance of construction permits and operating licenses. Once a plant is operating, however, the continuing regulation of nonradiological impacts on water quality and aquatic ecology is primarily the responsibility of the U.S. Environmental Protection Agency (EPA) or the applicable state permitting agency. This section describes the environmental statutes that underlie the regulation of impacts on aquatic resources from operating nuclear power plants. An understanding of the requirements of these statutes and the procedures under which aquatic resources effects are controlled by the permitting agencies is important to the interpretation of the issue categories.

As with other industries, discharges from steam-electric power plants are regulated under the Clean Water Act (CWA). Because power plants discharge wastewater into surface bodies of water, they must obtain a National Pollutant Discharge Elimination System (NPDES) permit under Section 402 of the CWA (33 USC 1342). The NPDES permit specifies the discharge standards and monitoring requirements that the facility must achieve for each point of discharge or outfall. NPDES permits must be renewed every 5 years, and during the renewal process, the plant must certify that no changes have been made to the facility that would alter aquatic impacts and no significant adverse impacts on

aquatic resources have been observed. An NPDES permit is issued by EPA or, more commonly, a designated state water quality agency.

Under Section 316(a) of the CWA [33 U.S.C. 1326(a)], state-established thermal effluent limitations in the NPDES permit may be modified to a less stringent level if it can be shown that the less stringent level (i.e., higher temperatures) is sufficient to "ensure the protection and propagation of a balanced, indigenous population of shellfish, fish, and wildlife" (Bugbee 1978). The regulatory agency's decision to allow alternative thermal discharge limitations is based on the utility's 316(a) demonstration, which may present considerable information about the actual or projected thermal impacts of the power plant discharge. Like the NPDES permit, the 316(a) "variance" must be renewed every 5 years, and the applicant must provide evidence to the permitting agency as to why the variance is still appropriate. A 316(a) determination is not necessary for those power plants that are able to meet state water temperature standards; this is the case for many nuclear power plants that use closed-cycle cooling systems (Appendix F). However, a biological assessment/study, similar to that which would be required by 316(a), may be required to ensure that the mixing zone meets water quality standards [Charles H. Kaplan, letter to G. F. Cada, Oak Ridge National Laboratory (ORNL), Oak Ridge, Tennessee November 19, 1990].

Section 316(b) of the CWA [33 USC 1326(b)] requires that "the location, design, construction, and capacity of cooling water intake structures reflect the best technology available for minimizing adverse environmental impact." Like NPDES permits and 316(a) determinations, 316(b) determinations are made by EPA or a state permitting agency based on data supplied in the applicant's 316(b) demonstration. The 316(b) determination need not be separated from the NPDES process. Although 316(b) determinations are usually one-time judgments that are not periodically reconsidered, a determination under CWA Section 316(b) is not permanently binding. Where circumstances have changed (e.g., fish population has changed, the initial determination was deemed inappropriate, or some adjustment in the operation of the intake structure is warranted), a full 316(b) demonstration could again be required by EPA during the license period.

The 316(a) and (b) demonstrations provide EPA (or a designated state permitting agency) a means for considering condenser cooling system effects on aquatic biota, not just on water quality per se. Other federal and state agencies with responsibilities for aquatic resources [e.g., the U.S. Fish and Wildlife Service (FWS), the National Marine Fisheries Service (NMFS), state fish and wildlife agencies] do not issue permits but are consulted in the development of NPDES permits and Section 316 determinations.

Under Section 401 of the CWA (33 USC 1341), an applicant for a federal license or permit (the utility in this case) must obtain a state water quality certification (i.e., the state must certify that the applicant's discharges will comply with state water quality standards). This requirement would apply, for example, to U.S. Army Corps of Engineers Section 404 permits for the disposal of dredged and fill material and to EPA-issued NPDES permits. Of course, issuance of an NPDES permit by a state water quality agency implies certification under Section 401.

Any pesticide must be registered under the Federal Insecticide, Fungicide, and Rodenticide Act (FIFRA) (7 USC 136 et seq.); this includes the various chlorine compounds, bromine compounds, and molluscicides used to control biofouling in power plants. Registration requires development of toxicity data. Under FIFRA, no one can use a biocide except in accordance with labeled instructions. Information about toxicity developed by the biocide manufacturer as a FIFRA requirement may be used to determine permissible power plant discharge concentrations for the NPDES permit.

Other potential aquatic resource issues are the subjects of particular legislation or executive orders (EOs) with specific requirements that cannot be limited or eliminated. For example, potential effects of plant modifications on floodplains and wetlands must be considered under EOs 11988 and 11990, respectively. Modifications that entail disposal of dredged material may require a permit from the U.S. Army Corps of Engineers under Section 404 of CWA (Pub. L. 92-500). Because the impacts could range from small to large depending on the details of the site and the proposed construction, the potential effect on floodplains or wetlands is a Category 2 issue.

4.2.1.2 Water Quality/Hydrology

The continued operation of once-through condenser cooling systems will allow continuation of associated hydrologic changes, including altered current patterns at intake and discharge structures, altered salinity gradients, and altered thermal stratification of lakes. Water quality effects considered in this section include temperature effects on sediment transport capacity, scouring, eutrophication, and the discharge of biocides, sanitary wastes, and heavy metals.

4.2.1.2.1 Current Patterns

Operation of the cooling system usually causes changes in water currents in the immediate vicinity of both the intake and the outfall. The extent of the changes depends on the design and siting of the intake and discharge and the nature of the body of water (Langford 1983). Because many nuclear plants are located on large rivers, lakes, reservoirs or on the seacoast, such localized altered current patterns are minor. However, plants sited near small bodies of water may have marked effects on current patterns. Operation of the cooling water system of Oyster Creek Nuclear Generating Station (NGS) changed the flows of the lower portions of Oyster Creek and South Branch Forked River from alternating flows typical of estuarine streams to unidirectional flows with constant salinity. The South Branch Forked River became an intake canal, with salt water continuously moving upstream toward the power plant. Oyster Creek, on the other hand, became a discharge canal, with heated salt water moving continuously away from the plant. Although substantial changes to the hydrology and water quality of these small streams have been documented, there have been only minor effects on nearby Barnegat Bay (Kennish et al. 1984). Changes to current patterns are of small significance if they are localized near the intake and discharge of the power plant and do not alter water use or hydrology in the wider area. Because once-through power plants are located near substantial bodies of water that are not subject to extreme changes in volume or flow rate, cooling water withdrawals and discharges do not have major effects on the hydrology of these large bodies of water. Impacts during the license renewal period are expected to be of small significance for all plants. Localized effects on current patterns would have been manifested during the initial stages of plant operation and would have been mitigated if necessary at that time. Based on a review of the published literature and operational monitoring reports, operation of the cooling system is expected to cause only small, localized changes to current patterns near the power plant and would not contribute to the cumulative impacts. Further, consultation with the utilities and regulatory agencies during preparation of the draft GEIS, as well as their comments on the draft GEIS, revealed no concerns about the individual or cumulative impacts of cooling system operations on current patterns. The impacts of altered current patterns will continue to be localized and of small significance. No change in operation of the cooling system is expected during the license renewal term, so no change in effects on current patterns is anticipated. The effects on current patterns could be reduced by changing to a closed-cycle cooling system or by reducing the plants' generation rate. However, these measures would be costly and are not reasonable in light of the small benefits that might be gained from their implementation. Hence, no additional mitigation measures to reduce the impact of cooling system operations on current patterns are necessary in the renewal period. For these reasons, the effect of once-through cooling system operation on current patterns is a Category 1 issue.

4.2.1.2.2 Salinity Gradients

Power plants operating near estuaries can also alter salinity gradients. As noted, the Oyster Creek NGS cooling system converted two brackish creeks to canals with unidirectional flows and increased salinity to an average of 17 parts per thousand, similar to Barnegat Bay (Tatham et al. 1978). The two creeks have become hydrologic extensions of the bay because of operation of the power plant, causing significant changes in the original water quality and aquatic communities in the creeks because water quality is now essentially the same as that of the bay (Chizmadia et al. 1984). Effects do not appear to extend beyond these creeks, which are also affected by dredging and thermal and chemical discharges.

Chesapeake Bay has a large number of power plants (mostly fossil-fueled) within the mesohaline (estuarine) zone. The fact that power plant discharges can alter salinity regimes, which in turn can change the type and abundance of aquatic organisms at the discharge site, is considered in the development of NPDES permits for Maryland power plants (MDNR 1988). Although natural salinity patterns have been altered by the discharge of Chalk Point (a large fossil-

fueled power plant) into a shallow mesohaline area of Chesapeake Bay, other plants in the area, including the Calvert Cliffs Nuclear Power Plant, have not had consistent discharge effects on salinity (MDNR 1988). Any localized effects on biota near these Maryland power plants are attributed to thermal and habitat changes, rather than to salinity. Changes to salinity gradients are of small significance if they are localized near the intake and discharge of the power plant and are within the normal tidal or seasonal movements of salinity gradients that characterize estuaries. Based on a review of the published literature and operational monitoring reports, operation of the cooling system is expected to cause only small, localized changes to salinity gradients near the power plant. Further, consultation with the utilities and regulatory agencies during preparation of the draft GEIS, as well as their comments on the draft GEIS, revealed no concerns about the individual or cumulative impacts of cooling system operations on salinity gradients. These organizations did not identify a need for additional mitigation of impacts associated with this issue. For example, operation of numerous once-through power plants in the Chesapeake Bay estuary has not caused significant changes in salinity gradients. The effects on salinity gradients could be reduced by changing to a closed-cycle cooling system or by reducing the plants' generation rate. However, these measures would be costly and are not reasonable in light of the small benefits that might be gained from their implementation. Hence, no additional mitigation measures to reduce the impact of cooling system operations on salinity gradients are necessary in the renewal period. For these reasons, the effects of once-through cooling system operation on salinity gradients are a Category 1 issue.

4.2.1.2.3 Thermal Effects

Discharges of heated effluents have the potential to affect water quality in five ways: (1) water temperature increases, including altered thermal stratification of lakes, (2) temperature effects on sediment transport capacity, (3) scouring, (4) lowered dissolved oxygen concentrations, and (5) eutrophication. Heated water discharges tend to remain at (or move toward) the surface of lakes and rivers. These discharges form a plume of warm water that dissipates with distance from the source by rejecting heat to the atmosphere or mixing with cooler ambient waters. Mixing tends to occur more rapidly in rivers than in lakes because of increased turbulence. Also because of turbulence, rivers do not naturally thermally stratify; as a result, alteration of temperature stratification in rivers by nuclear power plants is not an issue. Impacts of thermal discharges to water quality are of small significance if discharges are within thermal effluent limitations designed to ensure protection of water quality and if ongoing discharges have not resulted in adverse effects on the five attributes of water quality identified above.

Temperature-induced density stratification of lakes and reservoirs is a principal regulator of water quality and organism distribution in deep waters. Thermal stratification can be changed in two general ways by once-through cooling of power plants: by the discharge of heated water and by the altered circulation patterns generated by pumping cooling water into and out of the power station (Coutant 1981). Temperature elevation can intensify stratification (through surface discharge of heated water), whereas enhanced circulation may break down stratification. The relative importance of these two counteracting processes depends on the characteristics of the site and cooling system.

Destratification can increase dissolved oxygen concentrations in deeper waters and decrease the solubility of phosphorus (which contributes to eutrophication), and may be a net benefit to warm-water fisheries by expanding available habitat. For example, Larimore and McNurney compared two nearby lakes in Illinois--Lake Shelbyville, an unheated flood control reservoir, and Lake Sangchris, a cooling lake for a coal-fired power plant. In contrast with the unheated lake, Lake Sangchris did not stratify in the summer. Furthermore, largemouth bass had a longer growing season and greater annual growth in the cooling lake.

On the other hand, Coutant (1981) noted that the common practice of using cool hypolimnetic water from deep intakes for power station cooling, with surface discharge, may increase the size of the warm epilimnion and decrease the amount of habitat available to cool-water fish. For example, thermal discharges from the Oconee Nuclear Station have increased the annual heat load of Keowee Reservoir by one-third and lowered the thermocline (boundary between warm surface waters and cool bottom waters) from between 5 and 15 m to as low as 27 m (Oliver and Hudson 1987), although neither specified thermal limits nor lethal temperatures were exceeded [Oliver and Hudson 1987; Duke Power Company response to NUMARC survey (NUMARC 1990)].

The McGuire Nuclear Station withdraws cool hypolimnetic water from Lake Norman and discharges the heated water at the surface. As with Oconee, this has the effect of increasing the size of the upper layer of warm water and decreasing the habitat available for cool-water fishes (e.g., striped bass) in the hypolimnion of Lake Norman. Temperature modeling indicated that increasing the maximum upper discharge temperature from 95 to 99° F during July, August, and September would conserve cool-water fish habitat in the lake by allowing smaller withdrawal rates of hypolimnetic waters and would lower the average heat content of the lake by allowing more heat to be dissipated to the atmosphere from the warmer localized area (Duke Power Company 1988; Lewis 1990). The increased thermal limit is not expected to substantially affect water quality or aquatic biota in the mixing zone. Following consultation with the North Carolina Department of Health and Natural Resources, the NPDES permit has been modified to allow the higher temperatures [Duke Power Company response to NUMARC survey (NUMARC 1990)]. Modeling reservoir heat budgets allows effects of thermal discharges on stratification to be predicted and used by utilities and regulatory agencies to develop the best heat dissipation scheme. Altered thermal stratification has never been a problem at most plants. At other plants (i.e., McGuire and Oconee), the issue has been periodically re-examined during the initial license period and mitigated as needed by adjusting thermal discharges.

The effects of altered thermal stratification on water quality and distribution of aquatic organisms are monitored during plant operation and are mitigated if necessary through the NPDES permit renewal process. Based on a review of the published literature and operational monitoring reports, operation of the cooling system has not altered thermal stratification at most power plants with once-through cooling systems. At the small number of plants where changes in thermal stratification have occurred, monitoring and modeling studies have been used to adjust the thermal discharges, thereby mitigating adverse impacts. As appropriate, these models take into account other thermal inputs to the receiving waterbody and therefore consider cumulative as well as individual plant effects. Consultation with the utilities and regulatory agencies during preparation of the draft GEIS, as well as their comments on the draft GEIS, revealed no concerns about the individual or cumulative impacts of cooling system operations on thermal stratification. The impacts of altered thermal stratification will continue to be of small significance. No change in operation of the cooling system is expected during the license renewal term, so no change in effects on thermal stratification is anticipated. The effects of thermal stratification could be reduced by changing to a closed-cycle cooling system or by reducing the plants' generation rate. However, these measures would be costly and are not reasonable in light of the small benefits that might be gained from their implementation. Hence, no additional mitigation measures to reduce the impact of cooling system operations on thermal stratification are necessary in the renewal period. For these reasons, the effects of once-through cooling system operation on thermal stratification are a Category 1 issue.

Increased temperature and the resulting decreased viscosity have been hypothesized to change the sediment transport capacity of water, leading to potential sedimentation problems, altered turbidity of rivers, and changes in riverbed configuration. Coutant (1981) discussed the theoretical basis for such possible changes, as well as relevant field investigations, and concluded that there is no indication that this is a significant problem at operating power stations. Examples of altered sediment characteristics are more likely the result of power plant structures (e.g., jetties or canals) or current patterns near intakes and discharges; such alterations are readily mitigated.

Based on review of literature and operational monitoring reports, consultations with utilities and regulatory agencies, and comments on the draft GEIS, there is no evidence that temperature effects on sediment transport capacity have caused adverse environmental effects at any existing nuclear power plant. Regulatory agencies have expressed no concerns regarding the cumulative impacts of temperature effects on sediment transport capacity. Furthermore, because of the small area near the plant affected by increased water temperature, it is not expected that plant operations would have a significant contribution to cumulative impacts. Effects are considered to be of small significance for all plants. No change in the operation of the cooling system is expected during the license renewal term so no change in effects on sediment transport capacity is anticipated. Effects on sediment transport could be reduced by changing to a closed-cycle cooling system or by reducing the plants' generation rate. However, because the effects on sediment transport capacity are considered to be impacts of small significance and because these measures would be costly, the staff does not consider the implementation of these potential mitigation measures to be warranted. This is a Category 1 issue.

Cooling water discharges have the potential for scouring sediments, especially near high-velocity discharge structures, and for changing patterns of sediment deposition. Changes in sediment composition have been observed near operating power plants; for example, the Calvert Cliffs Nuclear Power Plant (MDNR), the Haddam Neck (Connecticut Yankee) Plant (Merriman and Thorpe), and the San Onofre Nuclear Generating Station (MRC). Fine-grained materials near the power plant discharge structure may become suspended by the discharge plume, resulting in localized increases in turbidity and a coarser-grained composition of sediments near the discharge. Depending on site-specific circumstances, changes in sediment composition near the power plant discharge may be regarded as adverse (shading of kelp beds; MRC), beneficial (enhancement of the productivity of benthic animals; MDNR), or inconsequential (Merriman and Thorpe). In all cases, sediment changes are localized.

Review of literature and operational monitoring reports, consultation with utilities and regulatory agencies, and comments on the draft GEIS confirm that sediment scouring has not been a problem at most power plants and has caused only minor localized effects at three plants. The impacts of sediment scouring will continue to be localized and of small significance. Contributions to cumulative impacts are not expected because of the small area near the power plant affected by higher velocity cooling water discharges, and no concerns about cumulative impacts were expressed by the regulatory agencies. The effects of sediment scouring could be reduced by changing to a closed-cycle cooling system or by reducing the plants' generation rate. However, these measures would be costly and are not reasonable in light of the small benefits that might be gained from their implementation. Hence, no additional mitigation measures to reduce sediment scouring effects are necessary in the renewal period. Sediment scouring due to discharge of condenser cooling water is a Category 1 issue.

An early concern about thermal discharges from power plants was that the heat would stimulate biological productivity and speed the process of eutrophication of natural waters. Coutant (1981) examined the evidence for such changes and concluded that, because enhanced mineralization of organic matter by bacteria would offset any thermally induced increases in organic production, significant eutrophication from direct thermal effects at most plants was unlikely. On the other hand, Coutant (1981) hypothesized that power plants that withdraw hypolimnetic water from stratified reservoirs and discharge heated effluents at the surface may (1) lengthen the growing season and (2) transfer previously unavailable nutrients from bottom waters to the surface. A longer growing season and more nutrients in the surface layer could result in more biological production and more organic matter that would settle into the hypolimnion and thus decay and consume oxygen; all of these are symptoms of eutrophication. This chain of events is most likely to be seen in small lakes that were oligotrophic (relatively unproductive) and supported hypolimnetic fisheries. Long-term monitoring of the McGuire Nuclear Station on such a reservoir indicates that operations have not resulted in increased eutrophication (NPDES No. NC0024392, 1988; NPDES No. NC0024392, 1990). Similarly, the operation of Oconee Nuclear Station does not appear to be causing eutrophication in Lake Keowee; long-term studies indicate that nutrient levels in the lake are low and appear to be declining [Duke Power Company, response to NUMARC survey (NUMARC 1990)]. Review of literature and operational monitoring reports, consultation with utilities and regulatory agencies, and review of comments on the draft GEIS indicate that power-plant-induced eutrophication has not been a problem at any existing nuclear power plant. Monitoring studies have not revealed cumulative impacts, and no concerns about nuclear power plants contributing to eutrophication in a cumulative way were expressed by the regulatory agencies. Effects are considered to be of small significance for all plants. No change in operation of the cooling system is expected during the license renewal term, so no change in the effects on eutrophification is anticipated. The eutrophication effects could be reduced by changing to a closed-cycle cooling system or by reducing the plants' generation rate. However, these measures would be costly and are not reasonable in light of the small benefits that might be gained from their implementation. Hence, no additional mitigation measures to reduce eutrophication effects are necessary in the renewal period. Accelerated eutrophication due to discharge of condenser cooling water is a Category 1 issue.

4.2.1.2.4 Chemical Effects

Some of the water quality issues that have been raised are potential chemical effects resulting from discharges of chlorine or other biocides, small-volume discharges of sanitary and other liquid wastes (Chapter 2), chemical spills, and heavy metals leached from cooling system piping and condenser tubing. Impacts of chemical discharges to water

quality are considered to be of small significance if discharges are within effluent limitations designed to ensure protection of water quality and if ongoing discharges have not resulted in adverse effects on aquatic biota.

The discharged chemicals, including chlorine and other biocides, are regulated by the NPDES permit of each nuclear power plant. Regulatory concern about toxic effects of chlorine and its combination products, as well as operating experience with control of biofouling, has led many plants to eliminate the use of chlorine or reduce the amount used below those levels that were originally anticipated in the environmental statements associated with issuing the construction permit and operating license. Some power plants use mechanical cleaning methods or, because of the abrasive properties of particulates in the intake water, do not have to clean the condenser cooling system at all. Other plants chlorinate the condenser cooling or service water systems but can isolate certain portions for treatment (e.g., a single unit of a multi-unit plant), thereby allowing dilution to reduce the concentration of chlorine in the discharge. Because of these refinements and the process for modifying NPDES permit conditions as needed, water quality degradation from existing biocide usage at once-through nuclear power plants is not a concern among the regulatory and resource agencies consulted for this GEIS. Based on review of literature and operational monitoring reports, consultations with utilities and regulatory agencies, and comments on the draft GEIS, water quality effects of discharge of chlorine and other biocides are considered to be of small significance for all plants. Small quantities of biocides are readily dissipated and/or chemically altered in the receiving waterbody so that significant cumulative impacts to water quality would not be expected. No change in operation of the cooling system is expected during the license renewal term, so no change in the effects of biocide discharges on receiving water quality is anticipated. Effects of biocide discharges could be reduced by increasing the degree of discharge water treatment, reducing the concentration of biocides, or by treating only a portion of the plants' cooling and service water systems at one time. However, because the effects of biocide discharges on water quality are considered to be impacts of small significance, the staff does not consider the implementation of these potential mitigation measures to be warranted. Discharge of chlorine and other biocides is a Category 1 issue. Discharges of sanitary wastes are regulated by NPDES permit, and discharges that do not violate the permit limits are of small significance.

Minor chemical spills or temporary off-specification discharges from sanitary waste treatment systems and other low-volume effluents (e.g., excessive coliform counts or total suspended solids levels, pH outside of permitted range) were cited as common NPDES permit violations in the utility responses to the NUMARC survey (NUMARC 1990). Such NPDES noncompliances have been variable, random in occurrence, and readily amenable to correction. These minor discharges or spills do not constitute widespread, consistent water quality impacts. Water quality effects of minor chemical discharges and spills are of small significance and do not have significant effects on aquatic biota for all plants and have been mitigated as needed. Significant cumulative impacts to water quality would not be expected because the small amounts of chemicals released by these minor discharges or spills are readily dissipated in the receiving waterbody. Spills and off-specification discharges occur seldom enough that regulatory agencies express no concern about them for operating nuclear power plants. While there may be additional management practices or discharge control devices that could further reduce the frequency of accidental spills and off-specification discharges, they are not warranted because impacts are already small and occur at low frequency and because such mitigation would be costly. The water quality impacts of permitted sanitary waste water and minor, nonradiological chemical discharges and spills are a Category 1 issue.

Heavy metals (e.g., copper, zinc, chromium) may be leached from condenser tubing and other heat exchangers and discharged by power plants as small-volume waste streams or corrosion products. Although all are found in small quantities in natural waters (and many are essential micronutrients), concentrations in the power plant discharge are controlled in the NPDES permit because excessive concentrations of heavy metals can be toxic to aquatic organisms. Discharge of metals and other toxic contaminants may also be subject to individual control strategies developed by the states to control toxic pollutants under the 1987 Amendments to the CWA. These strategies for point source discharges of toxic pollutants are implemented through the NPDES permit program. Langford reviewed the literature concerning heavy metal discharges from power plants and concluded that, during normal operations, concentrations generally are below the levels of detection. However, plant shutdowns for testing and refueling keep stagnant water in contact with condenser tubes and other metal structures for extended periods and could allow abnormally large amounts of metals to

be leached. For example, Harrison et al. (DOE/ER-0317) detected elevated copper concentrations in the discharge during startup of Diablo Canyon Nuclear Power Station. Abalone deaths in the discharge area of the Diablo Canyon were attributed to high copper concentrations in the effluent following a shutdown period (Martin et al. 1977).

The ability of aquatic organisms to bioaccumulate heavy metals even at low concentrations has led to concerns about toxicity both to the biota and to humans that consume contaminated fish and shellfish. For example, bioconcentration of copper discharged from the Chalk Point Plant (a fossil-fuel power plant on Chesapeake Bay) resulted in oyster "greening" (Roosenburg 1969). Bioaccumulation of copper released from the H. B. Robinson Plant resulted in malformations and decreased reproductive capacity among bluegill in the cooling reservoir (ASTM STP 854); see Section 4.4.3. In all three of these examples of excessive accumulation of copper (Diablo Canyon, Chalk Point, and H. B. Robinson), replacement of the copper alloy condenser tubes with another material (e.g., titanium) eliminated the problem.

Concentrations of heavy metals in the discharges of once-through nuclear power plants are normally within NPDES permit limits and are quickly diluted or flushed from the area by the large volumes of the receiving water. Discharge of metals and other toxic contaminants may also be subject to individual control strategies developed by the states to control toxic pollutants under the 1987 Amendments to the CWA. These strategies for point source discharges of toxic pollutants are implemented through the NPDES permit program. Excessive discharges of metals have been corrected at the two nuclear power plants (Diablo Canyon and H. B. Robinson) that experienced problems during the original license period. Impacts of heavy metal discharges are considered to be of small significance if water quality criteria (e.g., NPDES permits) are not violated and if aquatic organisms in the vicinity of the plant are not bioaccumulating the metals. Based on review of literature and operational monitoring reports, consultations with utilities and regulatory agencies, and comments on the draft GEIS, discharge of heavy metals leached from the condenser cooling system has been a problem at only Diablo Canyon and H. B.Robinson nuclear power plants, and mitigation was effective in both cases. Although cumulative impacts could result from the long-term accumulation and bioaccumulation of heavy metals, mitigation for individual plant effects has also reduced the potential for contributions to cumulative effects. Monitoring has not revealed a continuing problem with accumulation of heavy metals. No change in operation of the cooling system is expected during the license renewal term, so no change in metal concentrations in the cooling water discharge is anticipated. Effects of elevted metal concentrations could be reduced by replacing condenser tubes with alloys that are less likely to corrode. However, because the effects of metal concentrations on cooling water discharges are considered to be impacts of small significance and because the potential mitigation measures would be costly, the staff does not consider the implementation of these potential mitigation measures to be warranted. Elevated heavy metal concentrations in the condenser cooling water discharge is a Category 1 issue.

4.2.1.3 Water Use/Water Availability

Water use in the United States, as measured by freshwater withdrawals in 1985, averaged 15 million m^3/s (338 billion gal/day) (Carr et al. 1990). Four million m^3/s (ninety-two billion gal/day), or 27 percent of the water withdrawn, was consumed (e.g., by evaporation) and thus was not directly returned to the body of water. The remainder of the withdrawals (73 percent) was return flow available for reuse. In 1985, freshwater withdrawals by steam-electric power plants were approximately 5.7 million m^3/s (132 billion gal/day), which was 39 percent of the total freshwater withdrawals for all uses (Carr et al. 1990). About 2.4 million m^3/s (56 billion gal/day) of saline water was used for cooling by thermoelectric plants in coastal areas. Nuclear power plants accounted for 22 percent of the total thermoelectric withdrawals and fossil-fueled plants for 78 percent.

Consumptive uses remove the water from a stream or river and may or may not impact in-stream and off-stream beneficial uses. Return flows that are discharged to a stream are available to other users; freshwater withdrawals discharged to an estuary are effectively lost to further freshwater use (Carr et al. 1990). On the average, out of 0.4 m^3 (100 gal) withdrawn from surface waters for cooling of steam electric utilities, over 0.37 m^3 (98 gal) is returned almost immediately to the source body of water; less than 0.008 m^3 (2 gal) is consumed through evaporation (Solley et al. 1983). The consumptive loss for once-through cooling systems [0.5 m^3/s (18 ft^3/s) per 1000 MW(e)] is somewhat

smaller than that attributed to cooling tower evaporation, which has been estimated to average 0.9 m^3/s (30 ft^3/second) per 1000 MW(e) (Giusti and Meyer 1978).

In those areas experiencing water availability problems, nuclear plant consumption may conflict with either existing or potential downstream municipal water use as well as with in-stream water uses. A shift in human population distribution and associated changes in demand for water could have important implications for the continued supply of cooling water for power generating facilities.

Impacts of power plant water use are considered to be of small significance since conflicts with other offstream or instream water users have not occurred and are not anticipated. The nuclear power plants that use once-through condenser cooling systems are located on large lakes, reservoirs, estuaries, oceans, and rivers, and--except possibly during extended periods of drought--are unlikely to experience problems with the water supply. Because net water consumption by facilities using once-through cooling is negligible compared with the size of the body of water, such plants should have only a limited potential for impacts on water availability for downstream use. Should water-use conflicts arise during operation of existing power plants, local officials who are responsible for allocating water resources would have to weigh the use of water for power generation. Based on review of literature and operational monitoring reports, consultations with utilities and regulatory agencies, and comments on the draft GEIS, water use conflicts are found to be of small significance for all plants and cumulative impacts are not of concern. Net water consumption by facilities using once-through cooling is negligible compared with the size of the body of water. Because of abundant water supply, consumptive water use will have impacts of only small significance on riparian plant and animal communities at sites that use once-through cooling systems. No change in operation of the cooling system is expected during the license renewal term, so no change in effects on consumptive water use or riparian communities is anticipated. Effects on consumptive water use and riparian communities could be reduced by changing to a closed cycle cooling system or by reducing the plant's generation rate. However, because such changes would be costly, and because the effects on consumptive water use and riparian communities are of small significance, the staff does not consider the implementation of these potential mitigation measures to be warranted in light of the small benefit that might be gained. Both of these are Category 1 issues.

4.2.2 Aquatic Ecology

As noted in Section 4.2.1, large amounts of water are withdrawn by once-through cooling systems, passed through the condenser tubes, and discharged back to the body of water with an added load of heat and chemical contaminants. A total of 70 nuclear plants use once-through cooling (see Table 2.2). Initial concerns about effects of thermal effluents on aquatic biota (e.g., Krenkel and Parker 1969) were soon accompanied by concerns about impacts of biocide discharges and losses due to intake effects (i.e., impingement and entrainment). All of these issues have received considerable attention and study from utility and regulatory agency scientists in the past two decades, as exemplified by the numerous books and symposia devoted to resolving them (CONF-750425; Saila 1975; Schubel and Marcy 1978; Jensen 1978, 1981; Barnthouse and Van Winkle 1988). The aquatic resources issues that are considered in this section are entrainment (of fish, shellfish, phytoplankton, and zooplankton), impingement of fish and shellfish, thermal effects (heat shock, cold shock, thermal plume barrier to migratory fish, premature emergence of aquatic insects, enhanced susceptibility to parasitism and disease, stimulation of nuisance organisms, gas bubble disease, lower dissolved oxygen), and chemical effects (biocides and accumulation of contaminants in biota).

The following sections review the past and ongoing impacts on aquatic biota of operation of once-through condenser cooling systems. Any ongoing impacts will probably continue throughout the license renewal term because the cooling system design and operation is not expected to change for most plants. Judgments about the significance of these issues during the license renewal term are based on published information, agency consultation, and information provided by the utilities (Appendix F). These sources represent every nuclear power plant in the United States. In addition, seven case studies (Arkansas, McGuire, Cook, San Onofre, Crystal River, and combined effects of power plants on Lake Michigan and the Hudson River) were evaluated in greater detail. These case studies are examples of large once-through condenser cooling systems that affect a variety of aquatic environments (i.e., large lakes and reservoirs, oceans, and estuaries). Published information about these plants was reviewed to determine whether operation has resulted in

demonstrable entrainment, impingement, or thermal impacts. For some of the case studies in Appendix F, cumulative effects of the operation of nuclear power plants in conjunction with other sources of stress to aquatic resources are considered.

4.2.2.1 Analysis of Issues

4.2.2.1.1 Entrainment of Phytoplankton and Zooplankton

As discussed in Section 2.3.5, water that is withdrawn for power plant cooling carries with it a variety of aquatic organisms. Those organisms that are small enough to pass through the debris screens in the intake pass through the entire cooling system and are exposed to heat, mechanical and pressure stresses, and possibly biocides before being discharged to the receiving water. This process, called entrainment, may affect phytoplankton, zooplankton, planktonic larval stages of benthic organisms such as shellfish (i.e., meroplankton), and fish eggs and larvae (ichthyoplankton). Most nuclear power plants have been required to monitor for entrainment effects during the initial years of operation. Entrainment impacts to phytoplankton and zooplankton are considered to be of small significance if there is no evidence of reductions of populations of phytoplankton or zooplankton.

Studies of the effects of entrainment at several nuclear power plants are reviewed in Appendix F. None of the agencies consulted expressed concern about entrainment of phytoplankton or zooplankton (Appendix F). Because of large numbers and short regeneration times of phytoplankton and zooplankton, impacts of entrainment on these organisms have rarely been documented outside the immediate vicinity of the plant and are considered to be of little consequence (Schubel and Marcy 1978; Hesse et al. 1982; Kennish et al. 1984; MDNR 1988; MRC 1989; EPRI EA-1038).

The effects of entrainment at nuclear plants are not expected to cause or contribute to cumulative impacts to populations of zooplankton or phytoplankton. The effects of phytoplankton and zooplankton entrainment are localized (i.e., the affected areas are smaller than the distances between power plants) and are not expected to contribute to cumulative impacts because generation times of plankton are rapid. Review of the literature and operational monitoring reports did not reveal evidence of cumulative impacts from entrainment of phytoplankton and zooplankton. Further, consultation with utilities and agencies during preparation of the draft GEIS, as well as their comments on the draft GEIS (NUREG-1529), revealed no concerns about cumulative impacts of phytoplankton and zooplankton entrainment.

Reviews of the literature, monitoring reports, and consultation with agencies and utilities did not reveal any evidence of mitigation measures that had been required to correct problems with entrainment of phytoplankton and zooplankton. Because cooling system operations are not expected to change during the license renewal term, additional mitigation is not expected to be warranted.

Entrainment of phytoplankton and zooplankton is expected to have a small impact on populations of these organisms in the source body of water at any plant. No change in operation of the cooling system is expected during the license renewal term, so no change in effects on entrainment of phytoplankton and zooplankton is anticipated. Effects on entrainment of phytoplankton and zooplankton could be reduced by changing to a closed cycle cooling system or by reducing the plant's generation rate. However, because the effects on entrainment of phytoplankton and zooplankton are considered to be impacts of small significance and because they would be costly to implement, the staff does not consider the implementation of these potential mitigation measures to be warranted. This is a Category 1 issue.

4.2.2.1.2 Entrainment of Fish and Shellfish

The effects of entrainment on aquatic resources were considered by NRC at the time of original licensing and are periodically reconsidered by EPA or state water quality permitting agencies in the development of NPDES permits and 316(b) demonstrations (Section 4.2.1.1.2). Although significant adverse entrainment effects have not been demonstrated at most facilities, the entrainment of fish and shellfish in early life stages remains an issue at some nuclear power plants with once-through cooling systems. Agencies consulted for this GEIS expressed concerns about the impacts of entrainment at Zion, Salem, Oyster Creek, Indian Point, Calvert Cliffs, Millstone, Yankee Rowe, and

Surry. Several licensed nuclear power plants (e.g., Indian Point, Oyster Creek, Comanche Peak, Salem, and Zion) have unresolved 316(b) determinations. At some power plants, fish populations have been restored in the years since issuance of the original license and, as a result, more fish are now susceptible to entrainment. At other nuclear power plants (Beaver Valley, Susquehanna, Three Mile Island, and Peach Bottom), an agency expressed concern about future entrainment during the license renewal period as restoration efforts continue to increase fish populations (James Gillett, Deputy Regional Director, U.S. Fish and Wildlife Service, letter to G. F. Cada, ORNL, Oak Ridge, Tennessee, July 27, 1990).

The impacts of fish and shellfish entrainment are small at many plants, but they may be moderate or even large at a few plants with once-through cooling systems. Further, ongoing restoration efforts may increase the numbers of fish susceptible to intake effects during the license renewal period, so that entrainment studies conducted in support of the original license may no longer be valid. For these reasons, the entrainment of fish and shellfish is a Category 2 issue for plants with once-through cooling systems.

4.2.2.1.3 Impingement of Fish and Shellfish

Aquatic organisms that are drawn into the intake with the cooling water and are too large to pass through the debris screens may be impinged against the screens. Mortality of fish that are impinged is high at many plants because impinged organisms are eventually suffocated by being held against the screen mesh or are abraded, which can result in fatal infection. Impingement can affect large numbers of fish and invertebrates (crabs, shrimp, jellyfish, etc.). As with entrainment, operational monitoring and mitigative measures have allayed concerns about population-level effects at most plants, but impingement mortality continues to be an issue at others. Consultation with resource agencies (Appendix F) revealed that impingement is a frequent concern at once-through power plants, particularly where restoration of anadromous fish may be affected. In several cases, such as Oyster Creek, Salem, Surry, and Prairie Island, significant modifications were made to the intake structure to substantially reduce mortality due to impingement. Impingement is an intake-related effect that is considered by EPA or state water quality permitting agencies in the development of NPDES permits and 316(b) determinations. Appendix F examines studies of the effects of impingement of fish at several nuclear power plants. The impacts of impingement are small at many plants but may be moderate or even large at a few plants with once-through cooling systems. For this reason, the impingement of fish and shellfish is a Category 2 issue.

4.2.2.1.4 Thermal Discharge Effects

The heated effluents of steam-electric power plants can cause mortality among fish and other aquatic organisms from either thermal discharge effects or cold shock. Temperatures high enough to kill organisms are found in the cooling water systems, often in the area nearest the effluent discharge structure. Because thermal effects were among the earliest potential impacts identified for power plant operation, a great deal of research and regulatory effort has been aimed at understanding and controlling thermal discharges. Upper lethal temperatures (and various other expressions of temperature tolerance) have been determined for many important species and life stages. As a result, conditions that can lead to thermal discharge effects are relatively predictable.

Mitigative measures have been employed at many power plants to reduce the potential for thermal discharge effects. They can be minimized by lowering effluent temperature before discharge to natural waters (e.g., with cooling ponds) or by enhancing rapid mixing and heat dissipation (through high-velocity jet diffusers).

Each permitting state has developed mixing zone criteria and thermal discharge limits for steam-electric power plants. If the plant meets these criteria, no 316(a) determination is required. If the facility fails to meet the state temperature limits, the facility must submit data demonstrating that the discharge will ensure the protection and propagation of a balanced indigenous population of shellfish, fish, and wildlife [i.e., a 316(a) demonstration]. For plants within the state limits, the implicit assumption is made that a balanced indigenous population is ensured. The NPDES permit required for each power plant contains discharge temperature limits that are based on either state standards or site-specific studies of thermal effects [i.e., 316(a) demonstrations]. Nevertheless, thermal discharges continue to be an issue at

some once-through nuclear power plants (see agency consultation, Appendix F). In some cases, the facility is being extensively modified to minimize thermal-discharge-related effects (e.g., installation of cooling towers at Crystal River). In others, the 316(a) determination has not been approved and is now under review. Studies of thermal discharge effects at selected nuclear power plants that employ once-through cooling systems are described in Appendix F.

Based on the research literature, monitoring reports, and agency consultations, the potential for thermal discharges to cause thermal discharge effect mortalities is considered small for most plants. However, impacts may be moderate or even large at a few plants with once-through cooling systems. For example, thermal discharges at the Crystal River Nuclear Plant are considered by the agencies to have damaged the benthic invertebrate and seagrass communities in the effluent mixing zone around the discharge canal; as a result, helper cooling towers have been installed to reduce the discharge temperatures (Appendix F.4.7). Conversely, at other plants it may become advantageous to increase the temperature of the discharge in order to reduce the volume of water pumped through the plants and thereby reduce entrainment and impingement effects (see discussion of San Onofre Nuclear Generating Station in Appendix F.4.6). Because of continuing concerns about thermal discharge effects and the possible need to modify thermal discharges in the future in response to changing environmental conditions, this is a Category 2 issue for plants with once-through cooling systems.

4.2.2.1.5 Cold Shock

Cold shock occurs when organisms that have been acclimated to warm water (e.g., in a discharge canal in winter) are exposed to sudden temperature decreases when artificial heating ceases. Such situations may occur when a single-unit power plant suddenly shuts down in winter (Coutant 1977) or when winds or currents shift a thermal plume that was occupied by fish or benthic invertebrates seeking warm water. As with heat effects, the conditions that can lead to cold shock are relatively well understood--if it is a function of acclimation temperature, final (cold ambient) temperature, and exposure times--and therefore can be mitigated if needed. Cold shock mortalities have occurred, for example, at the Haddam Neck (Connecticut Yankee) plant (S. W. Gorski, letter to G. F. Cada, ORNL, Oak Ridge, Tennessee, July 18, 1990) and at the Prairie Island and Monticello nuclear generating plants (P. M. Bailey, letter to G. F. Cada, ORNL, Oak Ridge, Tennessee, July 3, 1990). Cold-shock mortalities are relatively rare and usually involve small numbers of fish. Population-level effects have not been demonstrated. Where necessary, the discharge structure or the plant operating procedures have been modified to reduce cold-shock effects. Structural modifications could include constructing a barrier to prevent fish from residing in the discharge canal or designing a high-velocity discharge to encourage rapid mixing and to discourage residence in the plume. Operational measures that could be used to reduce the risk of cold shock by gradually reducing the amount of warm water discharged in winter include gradual shutdowns or shutdowns of only one unit of a multi-unit power plant at a time.

Impacts of cold shock are considered to be of small significance if populations of aquatic organisms in the vicinity of the plant are not reduced. Based on review of literature and operational monitoring reports, consultations with utilities and regulatory agencies, and comments on the draft GEIS, cold-shock-related mortalities of aquatic organisms have been a problem at few existing nuclear power plants. Operational and structural mitigation measures have been effective at the plants that experienced cold shock mortalities. Because mitigation has been effective in those few cases where cold shock has been a problem, effects are considered to be of small significance for all plants. Cold shock is not expected to contribute to cumulative impacts because the potential area of impact is so small and because mitigation to prevent cold shock mortalities at individual power plants also reduces the likelihood that thermal discharges would contribute to cumulative effects. No change in operation of the cooling system is expected during the license renewal term, so no change in potential for cold shock is anticipated. Effects of cold shock could be reduced by changing to a closed cycle cooling system or by reducing the plant's generation rate. However, because the effects of cold shock are considered to be impacts of small significance and these changes would be costly, the staff does not consider the implementation of these potential mitigation measures to be warranted. Cold shock is a Category 1 issue.

4.2.2.1.6 Effects of Movements and Distribution of Aquatic Organisms

Heated effluents can affect aquatic populations in more subtle ways by altering their distribution, growth, or movements. Changes in benthic community composition such as losses of seagrass or other macrophytes can alter the habitat available to aquatic animals. Warm water can increase the metabolic rates of aquatic biota, a method often used in aquaculture to achieve high growth and production rates. However, in the absence of adequate food supplies, elevated metabolic rates can lead to a poor condition of the fish inhabiting heated areas.

It had been suggested that thermal plumes could constitute a barrier to migrating fish if the mixing zone covered a substantial area and exceeded the fish avoidance temperatures. However, studies of effects of heated effluents on Columbia River salmon (Nakatani 1969) and anadromous fish in the Chesapeake Bay (e.g, shad and striped bass) (MDNR 1988) have concluded that fish migration routes were not blocked. Most migrating adult American shad move in the lower half of the water column (Witherell and Kynard 1990) and are therefore unlikely to be deterred by a thermal plume at the surface.

Impacts from potential thermal plume barriers are considered to be of small significance if fish migrations are not blocked and populations of aquatic organisms in the vicinity of the plant are not reduced. Based on review of literature and operational monitoring reports, consultations with utilities and regulatory agencies, and comments on the draft GEIS, thermal plume barriers have not been a problem at any existing nuclear power plants. Heat is rapidly dissipated from power plant discharge plumes, so that effects would only be localized and therefore of small significance for all plants. These effects are not expected to contribute to cumulative impacts. No regulatory agency expressed concerns about cumulative impacts to migrations of aquatic organisms. No change in operation of the cooling system is expected during the license reneqal term, so no change in the potential for a thermal plume barrier to migrating fish is anticipated. Effects of a thermal plume barrier to migrating fish could be reduced by changing to a closed cycle cooling system or by reducing the plant's generation rate. However, because the effects of a thermal plume barrier to migrating fish are considered to be impacts of small significance and because the changes would be costly to implement, the staff does not consider the implementation of these potential mitigation measures to be warranted. Thus thermal plume barriers to migrating fish are a Category 1 issue.

The temperature regime of a body of water is an important component of habitat available to aquatic organisms. By altering the temperature regime, heated effluents can increase or decrease the amount of available habitat. For example, the abundance of coldwater species may be constrained near the southern limits of their distribution by thermal power plant effluents because the heated water exceeds the temperature tolerance of the species. By the same token, heated effluents can extend the northern range of warmwater species by providing thermal refuges during the winter. For example, Stauffer et al. found that blue tilapia, a tropical exotic fish species from Africa and southern Asia, were able to survive low winter water temperatures in the Susquehanna River, Pennsylvania, by congregating in thermal effluents. On a larger scale, the effects of global warming on water temperatures and on the distribution and productivity of aquatic organisms is being studied (Regier et al. 1990). At present, heated discharges from power plants influence a relatively small area of the affected bodies of water so that significant changes to the geographic distribution of a species are unlikely.

Impacts of thermal discharges on geographic distribution of aquatic organisms are considered to be of small significance if populations in the overall region are not reduced. Based on review of literature and operational monitoring reports, consultations with utilities and regulatory agencies, and comments on the draft GEIS, thermal discharges have not been shown to constrain the regional geographic distribution of aquatic organisms at any existing nuclear power plants. Localized reductions in coldwater species or increases in warmwater species are possible, but the effects are limited to small areas and have not altered larger geographic distributions. Effects are considered to be of small significance for all plants. Heat is rapidly dissipated from power plant discharge plumes, and heated plumes are small relative to the size of the waterbody. Consequently, effects would only be localized, and cumulative impacts on geographic distribution would not be expected. No regulatory agency expressed concerns about cumulative impacts on geographic distribution of aquatic organisms. No change in operation of the cooling system is expected during the license renewal term, so no change in effects on geographic distribution of aquatic organisms is anticipated. Effects on geographic distribution of aquatic organisms could be reduced by changing to a closed cycle cooling system or by reducing the plant's generation rate. However, because the effects on geographic distribution of aquatic organisms are

considered to be impacts of small significance and because these changes would be costly, the staff does not consider the implementation of these potential mitigation measures to be warranted. Effects of localized thermal discharges on geographic distribution of aquatic organisms are a Category 1 issue.

4.2.2.1.7 Premature Emergence of Aquatic Insects

Heated discharges from power plants can impact aquatic insects that inhabit the bottom areas influenced by the thermal plume. Impacts can range from direct mortality (e.g., when lethal temperatures are exceeded) to sublethal effects (e.g., increases in growth rates; decreases in development times; changes in body size and fecundity). Different species have different tolerances for altered temperature regimes, so that the benthic invertebrate community in the discharge area is rarely eliminated; but it may become dominated by a reduced number of taxa that are tolerant of higher temperatures. Because thermal plumes tend to be buoyant, often the bottom area of the receiving body of water that is affected by elevated temperatures is relatively small, and the effects on the benthic invertebrate community are localized.

Premature emergence of aquatic insects can result from heated effluents coming in contact with benthic habitats (e.g., in the discharge canal or along the shoreline near the discharge) and accelerating the development of immature forms. Adult insects emerge from the water before the normal seasonal cycle and may be unable to reproduce. Although this phenomenon has been observed near power plants, the area likely to be affected by thermal effluents would be a small part of the total lake or river bottom area available for production of aquatic insects. In addition, most aquatic insects have adult upstream migration flights that compensate for normal downstream drift of immature stages (Hynes), so that such localized effects on reproduction through this mechanism are inconsequential (Coutant 1981).

Effects of thermal discharges on premature emergence of aquatic insects are considered to be of small significance if changes are localized and populations in the receiving waterbody are not reduced. Based on reviews of literature and operational monitoring reports, consultations with utilities and regulatory agencies, and comments on the draft GEIS, thermal discharges have not been shown to cause reductions in the overall populations of aquatic insects near any existing nuclear power plants. Localized mortalities among heat-intolerant insect species occur in the thermal mixing zone, but the effects are limited to small areas and do not alter insect communities in larger geographic areas. Because heat in the discharged water is readily dissipated to the atmosphere, effects from this and other heated effluents would not be expected to contribute to cumulative impacts. Effects are considered to be of small significance for all plants. No change in operation of the cooling system is expected during the license renewal term, so no change in effects on emergence of aquatic insects is anticipated. Effects on emergence of aquatic insects could be reduced by changing to a closed cycle cooling system or by reducing the plant's generation rate. However, because the effects on emergence of aquatic insects are considered to be impacts of small significance and because these changes would be costly, the staff does not consider the implementation of these potential mitigation measures to be warranted. Effects of thermal discharges on premature emergence of aquatic insects is a Category 1 issue.

4.2.2.1.8 Gas Bubble Disease

Rapid heating of water in the condenser cooling system decreases the solubility and increases saturation levels of dissolved gases. The supersaturation of nitrogen gas has led to incidents of "gas bubble disease" (GBD) in the discharge areas of steam-electric power plants. The mechanisms by which gas supersaturation and GBD occur at steam-electric power plants (as well as under other conditions such as in the tailwaters of hydroelectric power plants) have been described by Wolke et al. Discharge configurations that do not allow rapid mixing of the effluent with the receiving waters may allow organisms to reside in the supersaturated effluent for long periods (Coutant 1981). As a result of equilibrating with the effluent, the tissues of aquatic organisms become supersaturated as well. Eventually, this unstable condition breaks down, and bubbles form inside the animal, most obviously in the fins and the eyeball (Wolke et al.). Fish mortalities generally occur at gas supersaturation levels above 110 to 115 percent (EPA 440/5-86-001).

GBD in the discharge of a steam-electric power plant (the Marshall Steam Station on Lake Norman) was first reported by DeMont and Miller and has been observed at other power plants since that time. GBD at the Pilgrim Nuclear Power Station caused a loss of 43,000 Atlantic menhaden in 1973, and another 5,000 in 1976 [Boston Edison Company,

response to NUMARC survey (NUMARC 1990)]. The problem appears to be greatest at power plants that have discharge canals where fish may reside for extended periods of time (i.e., long enough to equilibrate with supersaturated effluents). The reported incidences of GBD at the Waukegan Generating Station (a coal-fired plant on Lake Michigan; Otto), the Marshall Steam Station (a coal-fired plant on Lake Norman; DeMont and Miller), and the Pilgrim Nuclear Power Station all involved fish residing in discharge canals. Ensuring the rapid mixing of effluents with receiving waters (e.g., with a jet diffuser system) appears to prevent GBD mortalities by inhibiting residence in the thermal plume (Lee 1984). Alternatively, measures to prevent residence of fish in discharge canals may be effective. Emplacement of a barrier net to exclude fishes from the Pilgrim discharge canal has prevented

GBD mortalities at that plant since 1976 [Boston Edison Company, response to NUMARC survey (NUMARC 1990)]. The GBD problem has been mitigated at the one nuclear power plant where large numbers of fish were affected.

Impacts of GBD are considered to be of small significance if populations of aquatic organisms in the vicinity of the plant are not reduced. Based on review of literature and operational monitoring reports, consultations with utilities and regulatory agencies, and comments on the draft GEIS, GBD-related mortalities of aquatic organisms have not been a problem at most existing nuclear power plants; and operational and structural mitigation measures have been effective at those plants that experienced GBD mortalities during the initial license period. Effects are considered to be of small significance for all plants. Mitigation to prevent GBD mortalities at individual power plants also reduces the likelihood that thermal discharges would contribute to cumulative effects; no regulatory agency expressed concerns about the contribution of existing nuclear plants to cumulative impacts of GBD. No change in operation of the cooling system is expected during the license renewal term, so no change in effects on GBD is anticipated. Effects on GBD could be reduced by changing to a closed cycle cooling system or by reducing the plant's generation rate. However, because the effects on GBD are considered to be impacts of small significance and because such charges would be costly, the staff does not consider the implementation of these potential mitigation measures to be warranted. Gas bubble disease is a Category 1 issue.

4.2.2.1.9 Low Dissolved Oxygen in the Discharge

A power plant may aggravate the biological effects of low dissolved oxygen (DO) concentrations in the source water by adding a heat load to water with preexisting low DO levels. Aquatic biota below the discharge are then stressed by both higher temperatures (which increase the metabolic rate and the need for oxygen) and preexisting suboptimal oxygen levels. Concern about the effects of low DO concentrations in the heated discharge of the Sequoyah Nuclear Plant on downstream mussel beds and sauger reproduction has been expressed by the Tennessee Division of Water Pollution Control (Ann McGregor, Tennessee Division of Water Pollution Control, telephone interview with G. F. Cada, ORNL, Oak Ridge, Tennessee, May 30, 1990). Cool, hypolimnetic water released from Watts Bar reservoir, upstream from the Sequoyah Nuclear Plant, often had low DO concentrations. The temperature of the condenser cooling water rises approximately 14° C when both units are operating without cooling towers. As a result, a mean net decrease of 0.8 mg/L of DO concentration was measured in the cooling water, which under extreme low flow conditions could reduce the mean water column DO concentration in the Chickamauga reservoir near the Sequoyah Nuclear Plant by approximately 0.5 mg/L (TVA 1990). Water quality modeling indicated that increasing the DO of Watts Bar Dam releases by 2 mg/L would improve DO concentrations through Chickamauga Reservoir by about 1 mg/L. Recent changes in the release schedule of Watts Bar Dam appear to have reduced the stagnation of water near the Sequoyah Nuclear Plant and alleviated concern about low DO effects (Tom Roehm, Tennessee Division of Water Pollution Control, telephone interview with G. F. Cada, ORNL, Oak Ridge, Tennessee, November 16, 1992).

Impacts of low DO concentrations in the discharge are considered to be of small significance if populations of aquatic organisms in the vicinity of the plant are not reduced. Based on review of literature and operational monitoring reports, consultations with utilities and regulatory agencies, and comments on the draft GEIS, low DO concentrations have not been a problem at most existing nuclear power plants, and operational mitigation measures have been effective at the one plant that experienced problems during the initial license period. Effects of low DO concentrations are considered to be of small significance for all plants. Water will be reaerated by turbulent diffusion and/or photosynthesis, so far-field effects are not expected. Mitigation to prevent low DO concentrations in the vicinity of the power plant will also

reduce the likelihood of significant cumulative impacts; none of the resource agencies expressed an ongoing concern about the contribution of existing power plants to cumulative impacts of low DO concentrations. No change in operation of the cooling system is expected during the license renewal term, so no change in effects of low DO concentrations is anticipated. Effects of low DO concentrations could be reduced by changing to a closed cycle cooling system or by reducing the plant's generation rate. However, because the effects of low DO concentrations are considered to be impacts of small significance and because these changes would be costly, the staff does not consider the implementation of these potential mitigation measures to be warranted. Low DO concentrations in the thermal discharge are a Category 1 issue.

4.2.2.1.10 Losses from Parasitism, Predation, and Disease

Sublethal power plant stresses may alter predator-prey interactions in the receiving body of water. Aquatic organisms that are stunned but not killed by entrainment, impingement, or thermal effects may still suffer "indirect" mortality through increased susceptibility to predators. Numerous laboratory studies have been carried out to evaluate the level of indirect mortality that might occur following heat and cold shocks or entrainment (reviews in ORNL/TM-7801; Coutant 1981). These studies have commonly demonstrated increased susceptibility to predation, but field evidence of such effects is often limited to anecdotal information such as observations of enhanced feeding activity of seagulls and predatory fish near power plant outfalls. For example, Barkley and Perrin (1971), and CONF-730505 reported increased concentrations of predators feeding on forage fish attracted to thermal plumes. Neither quantification of the levels of stress needed to increase predation rates, nor prediction of the subsequent population- and community-level effects of such changes can be made easily in the field. It is likely that operation of once-through cooling systems will cause some changes in predator-prey relationships, but the best evidence for impacts (or lack of impacts) may come from long-term monitoring of fish populations. Neither the literature reviews nor consultations with agencies and utilities (Appendix F) have revealed studies that demonstrate population- or community-level effects from power-plant-induced alterations of predator-prey relationships.

Elevated water temperatures in power plant discharges have been hypothesized to increase the susceptibility of fish to diseases and parasites. Langford cites a number of factors that could contribute to such an effect, including the tendency for fish to congregate in the heated discharge area in greater than normal concentrations, increased stresses on fish in warmer water that makes them more prone to infection, and the ability of some diseases and parasites to develop faster at higher temperatures. Additionally, it has been suggested that stress and injury from entrainment and impingement contribute to increased susceptibility of fish to disease, parasites, and predation. Coutant (1981) noted that although some studies of increased disease and parasitism in heated waters have found localized effects, most were not adequately designed to determine the significance of the effects to the overall population. The greatest risks appear to be associated with changes in animal concentrations; crowding can occur among fish that are attracted to heated effluents in the winter or that avoid heated water in the summer by occupying limited cool-water refugia. Crowding increases the chances of exposure to infectious diseases and may also lead to other stresses (decreased food supply or reduced oxygen concentrations) that increase susceptibility to disease (Coutant 1987). Despite limited laboratory studies that confirm this phenomenon, population-level effects in the vicinity of plants have not been observed.

Effects of sublethal stresses on the susceptibility of aquatic organisms to predation, parasitism, and disease are considered to be of small significance if changes are localized and populations in the receiving waterbody are not reduced. Based on reviews of literature and operational monitoring reports, consultations with utilities and regulatory agencies, and comments on the draft GEIS, these forms of indirect, power plant-induced mortality have not been shown to cause reductions in the overall populations near any existing nuclear power plants. Effects are considered to be of small significance for all plants. Although sublethal power plant stresses could contribute to cumulative impacts experienced by aquatic biota, monitoring has revealed no evidence for significant effects; the regulatory and resource agencies consulted in the preparation of this GEIS did not express concerns about the contribution of sublethal power plant stresses to cumulative impacts. No change in operation of the cooling system is expected during the license renewal term, so no change in effects of sublethal stresses is anticipated. Effects of sublethal stresses could be reduced by changing to a closed cycle cooling system or by reducing the plant's generation rate. However, because the effects of

sublethal stresses are considered to be impacts of small significance and because the changes would be costly, the staff does not consider the implementation of these potential mitigation measures to be warranted. This is a Category 1 issue.

4.2.2.1.11 Stimulation of Nuisance Organisms

A variety of nuisance organisms or nonnative species may become established or proliferate as a result of power plant operations, including fouling organisms such as the Asiatic clam (*Corbicula* sp.) and the recently introduced zebra mussel, *Dreissena polymorpha*. Aspects of the operation of the power plants (e.g., warm temperatures or high flow rates that bring food to filter-feeding organisms) may be conducive to the growth and development of these organisms. *Corbicula* sp. and zebra mussels may become so abundant as to cause operational difficulties for the power plant and may out-compete native clams and mussels in thermally enriched waters. A population of tropical, non-native blue tilapia became established in the Susquehanna River in Pennsylvania by congregating in thermal effluents during the winter. Exposure to rapid temperature decreases (cold shock) killed these fish and eradicated the population from the vicinity of a steam-electric power plant (Stauffer et al.).

Langford (1983) reports a number of instances in which wood-boring crustaceans and mollusks, notably "shipworms," have caused concern in British waters. Although increased abundance of shipworms in the area influenced by heated power plant effluents caused substantial damage to wooden structures, replacement of old wood with concrete or metal structures eliminated the problem. Langford concluded that increased temperatures could enhance the activity and reproduction of wood-boring organisms in enclosed or limited areas but that elevated temperature patterns were not sufficiently stable to cause widespread effects.

In the United States, the influence of the operation of Oyster Creek Nuclear Generating Station on shipworm abundance and distribution has been extensively studied (see summary in Richards et al. 1984). Although numerous studies have varied somewhat in their conclusions, there is agreement that heated effluents from the plant increased the distribution and abundance of the nonnative, tropical-subtropical wood-boring species *Teredo bartschi* (Kennish et al. 1984). This species has not been found in Oyster Creek or Barnegat Bay since 1982, perhaps because of low water temperatures in Oyster Creek during a station outage in the winter of 1981-82 and the pathological effects of a parasite [GPU Nuclear Corporation response to NUMARC survey (NUMARC 1990)]. In addition, the removal of substantial amounts of driftwood and the replacement of untreated structural wood is thought to have contributed to reducing the populations of wood-boring organisms in Oyster Creek. No other concerns about nuisance organisms were cited by the regulatory or resource agencies contacted for this GEIS (Appendix F). Measures taken by licensees to control nuisance species (e.g., increased chlorination or use of molluskicides) may result in impacts on other species. This impact is addressed in Section 4.2.1 and is also controlled by the NPDES permitting procedures.

The effects of stimulating the growth of nuisance organisms are considered to be of small significance to aquatic resources if these organisms are restricted to the condenser cooling system (e.g., Asiatic clam; zebra mussel) or do not proliferate beyond the immediate vicinity of the plant. Based on review of literature and operational monitoring reports, consultations with utilities and regulatory agencies, and comments on the draft GEIS, nuisance organisms such as Asiatic clam may be an operational problem, but they have not impacted aquatic resources near most existing nuclear power plants. Mitigation measures were effective at the one plant that experienced problems with nuisance organisms (shipworms). Effects are considered to be of small significance for all plants. The regulatory and resource agencies consulted in the preparation of this GEIS did not express concerns about the contribution of power plant operations to other activities that might encourage the growth of nuisance organisms (i.e., cumulative effects). No change in operation of the cooling system is expected during the license renewal term, so no change in the growth or distribution of nuisance organisms is anticipated. Effects on nuisance organisms could be reduced by changing to a closed cycle cooling system or by reducing the plant's generation rate. However, because the effects on the growth of nuisance organisms are considered to be impacts of small significance and because such changes would be costly, the staff does not consider the implementation of these potential mitigation measures to be warranted. The stimulation of nuisance aquatic organisms by operation of existing power plants is a Category 1 issue.

4.2.2.2 Summary

The issues and the need for these issues to be addressed in license renewal applications of existing nuclear power plants with once-through cooling systems are summarized in Table 4.1. The operational experience of existing nuclear power plants indicates that many early aquatic resource concerns have not materialized as problems at any facility. Neither the published literature nor the responses of regulatory and resource agencies have revealed concerns about such early issues as phytoplankton and zooplankton entrainment and premature emergence of aquatic insects living in thermal discharges. Although statistically significant localized effects of these stresses have occasionally been demonstrated, long-term or far-field impacts have not been documented. Other issues (e.g., lowered DO concentrations, discharge of heavy metals, cold shock, and stimulation of nuisance organisms) were problems at a few nuclear power plants with once-through cooling systems but have since been mitigated.

Table 4.1 Significance of aquatic resources impacts for license renewal of existing nuclear power plants that use once-through cooling systems

Issue	Impact significance[a]
Water quality, hydrology, and use issues	
Water use conflicts	1
Altered current patterns at intake and discharge structures	1
Altered salinity gradients	1
Temperature effects on sediment transport capacity	1
Altered thermal stratification of lakes	1
Scouring from discharged cooling water	1
Eutrophication	1
Discharge of chlorine or other biocides	1
Discharge of metals in waste water	1
Discharge of sanitary wastes and minor chemical spills	1
Effects of consumptive water use on riparian communities	1
Aquatic ecology	
Impingement of fish and shellfish	2
Entrainment of fish and shellfish early life stages	2
Entrainment of phytoplankton and zooplankton	1
Thermal discharge effects	2
Cold shock	1
Thermal plume barrier to migrating fish	1
Distribution of aquatic organisms	1
Premature emergence of aquatic insects	1
Stimulation of nuisance organisms (e.g., shipworms)	1
Losses from predation, parasitism, and disease among organisms exposed to sublethal stresses	1
Gas supersaturation (gas bubble disease)	1
Low dissolved oxygen in the discharge	1
Accumulation of contaminants in sediments or biota (Section 4.2.1 and 4.2.4)	1

[a]A 1 means impact significance expected to be small at all sites. A 2 means that the impact may be of moderate or large significance at some sites.

Some aquatic resource issues warrant further monitoring and, in some cases, mitigative measures to define and correct adverse impacts. The entrainment and impingement of fish and the discharge of large volumes of heated effluents into small or warm ambient waters were a source of concern at some nuclear power plants. Such issues were examined and resolved through either the NEPA process during the licensing of the facility or the mechanisms of NPDES permitting

and associated 316(a) and (b) determinations. They either were found acceptable or mitigated. For some plants with once-through cooling systems, the large volumes of water withdrawn, heated, and discharged back to the receiving water may cause adverse effects to fish and shellfish populations during the license renewal term. Because impacts of entrainment of fish and shellfish, impingement, and thermal discharge effects could be small, moderate, or large, depending on the plant, these are Category 2 issues for plants with once-through cooling systems. These issues will need to be analyzed in the supplemental NEPA document at the time of license renewal.

4.3 Cooling Towers

[**Prev** | **Next** | **Table of Contents**]

This section introduces cooling towers and their emissions (Section 4.3.1) and then evaluates the impacts of the emissions on surface water and groundwater (Section 4.3.2), aquatic ecology (Section 4.3.3), agricultural crops (Section 4.3.4), terrestrial ecology (Section 4.3.5, which also includes bird ollisions with cooling towers), and human health (Section 4.3.6). mpacts of cooling-tower noise are also addressed (Section 4.3.7). Each section that evaluates impacts (Sections 4.3.2-4.3.7) provides a conclusion that defines the significance of the impacts. These conclusions are based on reviews of cooling-tower data available for towers at specific nuclear plants as well as for other cooling towers (e.g., those at coal-fired plants).

4.3.1 Introduction

Mechanical- and natural-draft wet cooling towers transfer waste heat to the atmosphere primarily by evaporating water. Natural-draft towers are generally up to 160 m (520 ft) in height, whereas mechanical-draft towers are generally less than 30 m (100 ft) tall (Roffman and Van Vleck 1974). Because of the large cooling capacity of natural-draft towers, only one such tower is required for each reactor unit; but two or more mechanical-draft towers are required for equivalent cooling.

Most of the water lost from a cooling tower escapes to the atmosphere as water vapor in the exhaust flow. About 10 percent of the vapor recondenses after release, forming the visible part of the plume leaving the tower (Golay et al. 1986). Drift droplets of cooling water are also entrained in the air stream inside the tower and escape directly into the atmosphere. A particulate solid drift material remains after droplet evaporation. The drift contains varying amounts of salts, biocides, and microorganisms.

Natural-draft towers release drift and moisture high into the atmosphere where they are dispersed over long distances. Local impacts are more likely to occur with mechanical-draft towers because the plume is not dispersed over as great an area. The visible moisture plume from a natural-draft cooling tower may be 20 to 30 percent longer than that from comparable mechanical-draft towers (Roffman and Van Vleck 1974). Icing of vegetation and roads can occur near mechanical draft towers when fog is present and temperatures are below freezing. Much of the drift eventually deposits on the earth. The atmospheric transport of drift and the amount of deposition to the earth has been estimated for most nuclear plants through the use of computer models. Actual measurements of drift deposition have been collected at only a few nuclear plants. These measurements indicate that, beyond about 1.5 km (1 mile) from nuclear plant cooling towers, salt deposition is not significantly above natural background levels.

4.3.2 Surface Water Quality and Use

Sections 4.3.2 and 4.3.3 review the past and ongoing impacts on aquatic resources caused by the operation of nuclear power plants with cooling towers. Any ongoing impacts will probably continue into the license renewal term because the cooling system design and operation will not change as a result of license renewal. Judgments about the significance of these issues during the license renewal terms are based on published information, agency consultation, and information provided by the utilities (Appendix F) applicable to every nuclear power plant in the United States. The conclusions drawn in Sections 4.3.2 and 4.3.3 apply to all nuclear power plants with cooling towers.

4.3.2.1 Water Use

Two factors may cause water-use and water-availability issues to become important for some nuclear power plants that use cooling towers. First, the relatively small rates of cooling water withdrawal and discharge allowed some power plants with cooling towers to be located on small bodies of water that are susceptible to droughts or competing water uses. Second, closed-cycle cooling systems evaporate cooling water, and consumptive water losses may represent a substantial proportion of the flows in small rivers. Loss of a substantial portion of flow from a small stream as a result of evaporative losses from a cooling tower will reduce the amount of habitat for fish and aquatic invertebrates. Off-stream water uses, such as power plant consumption, must be regulated to ensure that important in-stream uses, such as habitat for aquatic organisms, boating, angling, and waste assimilation, are not compromised.

Consumptive water use can adversely impact riparian vegetation and associated animal communities by reducing the amount of water in the stream that is available for plant growth, maintenance, and reproduction. Riparian vegetation is defined as streamside vegetation that is structurally and floristically distinct from adjacent upland plant communities (Taylor 1982). Riparian vegetation has important ecological functions; and its importance as a resource has been widely recognized and reviewed (e.g., Brinson et al. 1981; Johnson et al. 1985). Briefly, riparian vegetation stabilizes stream channels and floodplains. It influences biogeochemical cycles, water temperature and quality, and the duration and magnitude of flooding. Riparian vegetation also provides diverse cover, food, water, reproductive habitat, and migration corridors for many aquatic and terrestrial animals. As a result, riparian zones often support a wide variety and high density of wildlife (deer, small mammals, songbirds, raptors, reptiles, and amphibians), especially in arid or urbanized areas. Riparian vegetation may be adversely affected by dewatering in a number of ways (Taylor 1982), including decreases in the width of the riparian corridor, changes in species and community diversity, increased susceptibility to flooding, changes in tree canopy cover, lower tree basal area, and lower seedling densities. Impacts to wildlife occur as a direct or indirect result of degradation of riparian habitats. Such dewatering effects are most apparent in the arid and semi-arid West; in the eastern United States, dewatering effects generally involve more subtle changes in community composition because of the higher precipitation, humidity, and soil moisture and the lower water stress conditions that prevail.

Limerick Generating Station, located on the Schuylkill River at Pottstown, Pennsylvania, is an example of a plant with a closed-cycle cooling system that is subject to water availability constraints because of in-stream-flow requirements in a smaller river, controversy over water use related to interbasin transfer, competing water uses, and water-related agreements between utilities. Aquatic resource issues identified include (1) water quality and low-flow problems in the Schuylkill River; (2) water availability conflicts with downstream water users; (3) increased in-stream flow requirements, particularly with respect to continuing efforts to improve the water quality of the Schuylkill River and to reintroduce American shad into the river; and (4) concerns over saltwater movement upstream in the Delaware River as the result of upstream water use (Margaret A. Reilly, letter to G. F. Cada, ORNL, Oak Ridge, Tennessee May 24, 1990; D. T. Guise, letter to G. F. Cada, ORNL, Oak Ridge, Tennessee, July 3, 1990).

Limerick is in one of the fastest growing regions in Pennsylvania, which is experiencing heavy residential development and water demands for domestic, existing industrial, and developing industrial uses (Joseph Hoffman, letter to V. R. Tolbert, ORNL, Oak Ridge, Tennessee, August 27, 1990). Limerick is permitted to withdraw up to 13 percent of the minimum flow of the Schuylkill River and a major portion of the flow of Perkiomen Creek for cooling tower makeup. Only 5 percent of the 1.8-2.0 m^3/s (65-70 ft^3/s) withdrawn from the Schuylkill River when ow is greater than 15 m^3/s (530 ft^3/s) is returned to the river. This loss of in-stream flow is viewed as a significant contribution to the water quality and low-flow problems in the Schuylkill River (Dennis T. Guise, letter to G. F. Cada, ORNL, Oak Ridge, Tennessee, July 3, 1990). This water-use issue may be exacerbated as efforts to reintroduce the American shad into the Schuylkill River continue. In addition to the water use from the Schuylkill River, 2 m^3/s (71 ft^3/s) of water is diverted from the Delaware River to the East Branch of Perkiomen Creek via the Point Pleasant Diversion at a rate of 2 m^3/s (71 ft^3/s); this interbasin transfer affects the achievement of the 85 m^3/s (3000 ft^3/s) minimum flow objective in the Delaware River at Trenton. The effects of the diversion are being debated through an NPDES permit appeal before the Pennsylvania Environmental Hearing Board (Dennis T. Guise, letter to G. F. Cada, ORNL, Oak Ridge, Tennessee, July 3, 1990).

The Palo Verde NGS offers another example of competing water uses that may affect continued operation of nuclear facilities that use cooling towers. Palo Verde currently uses treated effluent from the cities of Phoenix and Tolleson for cooling tower makeup water. The blowdown from the cooling towers discharges to on-site lined evaporation ponds [Arizona Public Service Company response to NUMARC survey (NUMARC 1990)]. In the absence of the power plant, part of the municipal effluent would be used for commercial purposes and the remainder discharged to the Gila River, where it would be used for groundwater recharge, irrigation, and support of riparian habitat (Jack Bale, letter to G. F. Cada, ORNL, Oak Ridge, Tennessee, May 31, 1990). According to the Arizona Game and Fish Department (Donald Turner, Arizona Game and Fish Department letter to G. F. Cada, ORNL, Oak Ridge, Tennessee, June 29, 1990), if Palo Verde uses all of its allocation, the flow from the Gila River downstream to Gillespie Dam will be reduced, the water tables will drop significantly, and aquatic habitat and riparian vegetation will be destroyed. Sixty-nine percent of the water flowing in the Gila and Salt rivers downstream from the Ninety-First Avenue treatment plant is discharged by the treatment plant. Most if not all of the water produced by the treatment plant is committed to Palo Verde. When all three units of the plant were operating, flow in the river was significantly reduced, pools and ponds dried up, and numerous fish die-offs occurred (Donald Turner, Arizona Game and Fish Department, letter to G. F. Cada, ORNL, Oak Ridge, Tennessee, June 29, 1990).

Nuclear facilities on small bodies of water may experience water-use constraints related to availability. For example, during temporary drought periods, power plants with cooling towers may have to curtail operations if evaporative water losses exceed the capacity of small, multiple-use source bodies of water. Byron Station in Illinois withdraws water from the Rock River to supply natural-draft cooling towers. By agreement with the Illinois Department of Conservation, the withdrawal for makeup is limited to 3.5 m^3/s (125 ft^3/s) and net water consumption is limited to no more than 9 percent of the flow below 19 m^3/s (679 ft^3/s) [Commonwealth Edison Company response to NUMARC survey (NUMARC 1990)]. Duane Arnold Energy Center on the Cedar River in Iowa uses mechanical-draft cooling towers for condenser cooling and could also experience water availability constraints. The state of Iowa Department of Natural Resources currently has no water-use concerns with operation of Duane Arnold (Larry J. Wilson, letter to G. F. Cada, ORNL, Oak Ridge, Tennessee, May 22, 1990); however, the plant may possibly experience future constraints on the availability of water for consumptive use, because the surface water withdrawals within the state are projected to increase by 19 percent from 1985 to 2005 (Thamke 1990). Within Linn County, where Duane Arnold is located, water use is also projected to increase (Brian Tormee, telephone interview with V. R. Tolbert, ORNL, Oak Ridge, Tennessee, September 4, 1990).

Consultations with regulatory and resources agencies indicate that water use conflicts are already a concern at two closed-cycle nuclear power plants (Limerick and Palo Verde) and may be a problem in the future at Byron Station and the Duane Arnold Energy Center. Because water use conflicts may be small or moderate during the license renewal period, this is a Category 2 issue for nuclear plants with closed-cycle cooling systems. Related to this, the effects of consumptive water use on in-stream and riparian communities could also be small or moderate, depending on the plant, and is also a Category 2 issue.

4.3.2.2 Water Quality

Although cooling towers are considered to be closed-cycle cooling systems, concentration of dissolved salts in the makeup water--which results from evaporative water loss--requires the discharge of a certain percentage of the mineral-rich stream (blowdown) and its replacement with fresh water (makeup). The quantities of blowdown are relatively small compared with the discharges from once-through systems, typically on the order of 10 percent. Water quality impacts could occur from the elevated temperatures of the blowdown or from the concentration and discharge of chemicals added to the recirculating cooling water (to prevent corrosion and biofouling, regulate pH, etc.). A unit of water may reside in the cooling circuit for 3 to 20 cycles before being lost to evaporation or released in the blowdown stream (Coutant 1981). The concentration of total dissolved solids in the cooling tower blowdown averages 500 percent of that in the makeup water, a concentration factor that can be tolerated by most freshwater biota (ORNL/NUREG/TM-

226). Dilution of the low-volume blowdown by the receiving water also reduces water quality impacts of heat and contaminants discharged from closed-cycle cooling systems.

Because of strict regulation of chemical discharges from steam-electric power plants (e.g., EPA regulations per 40 CFR Part 423), water treatment systems for cooling tower blowdown have been developed. Many of these systems recapture chemical additives for recycling in the cooling system (Coutant 1981). As noted in Section 4.2, all nuclear power plants are required to obtain an NPDES permit to discharge effluents. These permits are renewed every 5 years by the regulatory agency, either EPA or, more commonly, the state's water quality permitting agency. The periodic NPDES permit renewals provide the opportunity to require modification of power plant discharges or to alter discharge monitoring in response to water quality concerns. Utility responses to the NUMARC survey (Table F.2) indicate that such changes have been made during the plants' operation to correct water quality problems.

Impacts of cooling tower discharges are considered to be of small significance if water quality criteria (e.g., NPDES permits) are not consistently violated. In considering the effects of closed-cycle cooling systems on water quality, the staff evaluated the same issues that were evaluated for open-cycle systems (Table 4.1): altered current patterns, altered salinity gradients, temperature effects on sediment transport capacity, altered thermal stratification of lakes, scouring from discharged cooling water, eutrophication, discharge of chlorine and other biocides, discharge of other chemical contaminants, and discharge of sanitary wastes. Based on review of literature and operational monitoring reports, consultations with utilities and regulatory agencies, and comments on the draft GEIS, discharge of cooling tower effluents has not been a problem at existing nuclear plants. Although occasional violations of NPDES permits have occurred at many plants (e.g., minor spills), water quality impacts have been localized and temporary. Effects are considered to be of small significance for all plants. Cumulative impacts to water quality would not be expected because the small amounts of chemicals released by these low-volume discharges are readily dissipated in the receiving waterbody. No change in operation of the cooling system is expected during the license renewal term, so no change in effects of cooling towers discharges on receiving water quality is anticipated. Effects of cooling tower discharges could be reduced by operating additional wastewater treatment systems, or by reducing the plant's generation rate. However, because the effects of cooling tower discharges on water quality are considered to be impacts of small significance and because the changes would be costly, the staff does not consider the implementation of these potential mitigation measures to be warranted. Effects of cooling tower discharges on water quality are all Category 1 issues.

4.3.3 Aquatic Ecology

Cooling towers have been suggested as mitigative measures to reduce known or predicted entrainment and impingement losses (see, for example, Barnthouse and Van Winkle 1988). The relatively small volumes of makeup and blowdown water needed for closed-cycle cooling systems result in concomitantly low entrainment, impingement, and discharge effects (see Section 4.2.2 for a more complete discussion of these effects regarding once-through cooling systems). Studies of intake and discharge effects of closed-cycle cooling systems have generally judged the impacts to be insignificant (NUREG/0720; NUREG/CR-2337). None of the resource agencies consulted for this GEIS (Appendix F) expressed concerns about the impacts of closed-cycle cooling towers on aquatic resources.

However, even low rates of entrainment and impingement at a closed-cycle cooling system can be a concern when an unusually important resource is affected. Such aquatic resources would include threatened or endangered species or anadromous fish that are undergoing restoration. For example, concern about potential impacts of the Washington Nuclear Project (WNP-2) on chinook salmon has been raised by the Washington Department of Fisheries (Cynthia A. Wilson, Washington Department of Fisheries, letter to G. F. Cada, ORNL, Oak Ridge, Tennessee, July 5, 1990). Although entrainment, impingement, and thermal discharges are not believed to be a problem at WNP-2, the importance of the Columbia River salmon stocks are such that the resource agency feels that monitoring should continue. Similarly, the Pennsylvania Fish Commission has expressed concern about future entrainment and impingement of American shad by the Limerick Generating Station, the Susquehanna Steam Electric Station, Three Mile Island Nuclear Station, and Peach Bottom Atomic Power Station (Dennis T. Guise, Pennsylvania Fish Commission, letter to G. F. Cada, ORNL, Oak Ridge, Tennessee, July 3, 1990). In all cases, losses of American shad at

these power plants are minimal or nonexistent, but periodic monitoring has been recommended to ensure that no future problems occur as the anadromous fish restoration efforts continue.

It is unlikely that the small volumes of water withdrawn and discharged by closed-cycle cooling systems would interfere with the future restoration of aquatic biota or their habitats. Effects of operation of closed-cycle cooling systems on aquatic organisms are considered to be of small significance if changes are localized and populations in the receiving waterbody are not reduced. In considering the effects of closed-cycle cooling systems on aquatic ecology, the staff evaluated the same issues that were evaluated for open-cycle systems (Table 4.1): impingement of fish and shellfish, entrainment of fish and shellfish early life stages, entrainment of phytoplankton and zooplankton, thermal discharge effects, cold shock, effects on movement and distribution of aquatic biota, premature emergency of aquatic insects, stimulation of nuisance organisms, losses from predation, parasitism, and disease, gas supersaturation of low dissolved oxygen in the discharge, and accumulation of contaminants in sediments or biota. Based on reviews of literature and operational monitoring reports, consultations with utilities and regulatory agencies, and comments on the draft GEIS, these potential effects have not been shown to cause reductions in the aquatic populations near any existing nuclear power plants. None of the regulatory and resource agencies expressed concerns about the cumulative effects on aquatic resources of closed cycle cooling system operations at this time, although some recommended continued monitoring in view of efforts to restore fish populations. Effects of all of these issues are considered to be of small significance for all plants. No change in operation of the cooling system is expected during the license renewal term, so no change in effects of cooling towers on aquatic biota is anticipated. Effects of entrainment, impingement, and discharges from closed-cycle cooling systems could be reduced by reducing the plant's generation rate, or by operating additional wastewater treatment systems. However, because the effects of cooling tower withdrawals and discharges on aquatic organisms are considered to be impacts of small significance and because the changes would be costly, the staff does not consider the implementation of these potential mitigation measures to be warranted. The effects of closed-cycle cooling system operation on aquatic biota are all Category 1 issues.

4.3.4 Agricultural Crops and Ornamental Vegetation

The issue addressed by this section is the extent to which the productivity of agricultural crops near nuclear plants may be reduced by exposure to salts or other effects (e.g., icing, increased humidity) resulting from cooling-tower operation. The approach to evaluating this issue was as follows: first, based on a literature review, potential impacts of salts in general (whether from cooling towers or other sources such as wind-blown salts near seashores) are described according to the rate of salt deposition to earth and the lative sensitivity of different types of crops (Section 4.3.4.1); then, the data generated by monitoring programs at a representative ubset of specific nuclear plants were reviewed (Section 4.3.4.2). The subset includes 10 of the 11 nuclear power plants with mechanical-draft cooling towers. Mechanical-draft towers are the focus of this section because impacts of drift deposition and icing are more likely to occur near these towers than at natural-draft towers. Drift from natural-draft towers is released at greater heights, disperses more widely, and therefore deposits on earth at lower rates or concentrations. Data were also found and reviewed for 8 of the 17 plants with natural-draft cooling towers (Table 4.1). The coal-fired Chalk Point Plant was also included in the analysis because extensive monitoring of cooling-tower-drift effects has been conducted there and because this plant uses brackish water for cooling and represents a case with comparatively high potential for drift impacts from natural-draft towers. The only nuclear plant that has a natural-draft tower and uses brackish water for cooling is Hope Creek in New Jersey. It is included among the plants that were reviewed.

The following standard of significance is applied to the effects of cooling tower operation on agricultural crops and ornamental vegetation. The impact is of small significance if under expected operational conditions measurable productivity losses (either quantity or quality of yield) do not occur for agricultural crops; and measurable damage (either visual or to plant function) does not occur for ornamental vegetation.

4.3.4.1 Overview of Impacts

4.3.4.1.1 Ambient Salts and Cooling-Tower Drift

Agricultural crops can be affected by chemical salts and biocides in cooling tower drift and drift-induced or plume-induced ice formation. Increased fogging, cloud cover, and relative humidity resulting from cooling-tower operation have little potential to affect crops, and adverse effects have not been reported. Generally, drift from cooling towers using fresh water has low salt concentrations and, in the case of mechanical draft towers, falls mostly within the immediate vicinity of the towers (ANL/ES-53), representing little hazard to vegetation off-site. Typical amounts of salt or total dissolved solids in freshwater environments are around 1000 ppm (ANL/ES-53). In arid environments, competition for water resources can result in the use of relatively low-quality or saline water for cooling, and the potential for drift-induced damage to surrounding vegetation may be greater (McBrayer and Oakes 1982). For example, source water for cooling at Palo Verde in Arizona is withdrawn from an onsite reservoir containing treated sewage effluent of relatively high salinity. As a result, cooling tower basin water also had high salinity levels including 10,000 to 26,000 ppm total dissolved solids, 3,400 to 7,000 ppm Cl^-, and 2,700 to 8,600 ppm Na^+ (NUS-5241). High salt levels also occur at plants on the coasts or coastal bays. Brackish cooling water used by the Chalk Point coal-fired plant in Maryland contained 11,000 to 26,000 ppm total soluble salts and 6,600 to 18,000 ppm Cl^- (Mulchi and Armbruster 1983). Nuclear plants with cooling towers use fresh water, except for the Hope Creek Plant in New Jersey, which uses saline water. At the Crystal River Plant, Florida, which currently uses brackish water in once-through cooling, a helper cooling tower has been constructed to cool water in a canal that receives discharge from five fossil and one nuclear units.

Talbot (1979) has concluded that adequate estimates of natural background levels of atmospheric salt loading (naturally occurring drift) and rates of deposition thereof are not available for points remote from oceans. In field measurements at a wet cooling tower, A. Backhaus et al. (1988) estimated that up to 60 percent of the chemical contents in the sample came from atmospheric aerosols and not from the tower. Therefore, observed deposition is not all drift from cooling towers (Talbot 1979). Recent work (ORNL/TM-11121) has quantified background aerosol deposition for a dozen sites throughout the country, but deposition for most locations remains poorly known.

Salts from cooling towers are deposited on vegetation by (1) wind-driven impaction, (2) droplet and particulate fallout, and (3) rainfall (Talbot 1979; CONF-740302, 1975b). In high-salt environments such as a windy seashore, impaction is usually the most important process, delivering 10 times more salt to vegetation than does fallout. Increasing wind speeds and salt concentrations increase impaction, hence increasing vegetation injury (Talbot 1979). In most humid environments, rainwater will wash off salts deposited on vegetation (ANL/ES-53), but exposure can be significant during periods between rainfalls.

4.3.4.1.2 Effects of Salt Drift

Plants damaged by salt drift may have acute symptoms, including necrotic or discolored tissue, stunted growth, or deformities (Talbot 1979; Hoffman et al. 1987). Chronic effects are less obvious but may include some degree of chlorosis and reduced growth (Talbot 1979) or increased susceptibility to disease and insect damage (Hosker and Lindberg 1982).

Climatic conditions affect plants' ability to tolerate salt (Talbot 1979; Maas 1985). The degree of injury is related to the salt content in the leaves, but hot or dry weather conditions and water stress are critical in inducing injury (most crops can tolerate greater salt stress during relatively cool and humid weather) (Maas 1985).

Among the factors that affect the plant's foliar accumulation of salt are physical characteristics of the leaves (Maas 1985; CONF-740302, 1975d; Taylor 1980), type and concentration of salt, ambient temperature and humidity, and length of time the leaf remains wet (Maas 1985). Because salt on foliage is apparently absorbed from solution, high humidity, which retards evaporation, enhances salt uptake (CONF-740302, 1975d; McCune et al. 1977; Talbot 1979; Grattan et al. 1981). Because precipitation and dew affect salt deposition, uptake, and resultant injury, dose exposure is difficult to predict (Talbot 1979; Grattan et al. 1981; McCune et al. 1977; EPA-600/3-76-078).

Plant species and crop varieties vary significantly in their tolerance to drift deposition and to soil salinity (Talbot 1979; Maas 1985). In general, salt uptake, plant injury, and reduction in crop yield have been shown to increase with

increasing levels of airborne salt or deposition and with time of exposure (CONF-740302, 1975b; Mulchi and Armbruster 1981; Maas; Grattan et al.; EPA-600/3-76-078). Some plants, however, have shown a slight increase in vegetative productivity [e.g., tobacco at < 4 kg/ha (3.6 lb/acre) per week (Mulchi and Armbruster 1983) and cotton at 8 kg/ha (7 lb/acre per week) (Hoffman et al. 1987)]. Based on experimental exposures, a yield reduction of 10 percent has been estimated for deposition levels as low as 4.7 kg/ha (4.2 lb/acre) per week to corn, a species sensitive to foliar salt injury (Mulchi and Armbruster 1981). Relationships between experimental levels of salt deposition, foliar concentrations of sodium and chloride, and corn yield show that yield may be slightly reduced even at rates as low as 2 kg/ha (1.8 lb/acre) per week (Mulchi and Armbruster 1981). Also, bush beans can have reduced yield depending on the age of plants, with older plants being most sensitive (EPA-600/3-76-078). Deposition rates near nuclear-plant towers, according to available deposition data (Section 4.3.5.1.2), appear to be generally below the rates that would affect sensitive agricultural crops.

Talbot (1979) tabulated salt deposition amounts known to induce acute toxicity symptoms in vegetation (Table 4.2). Corn was the most sensitive crop, showing injury above 1.8 kg/ha (1.6 lb/acre) per week; the least sensitive was pinto beans, showing injury above 253 kg/ha (226 lb/acre) per week. Armbruster and Mulchi (1984) showed that foliar salt deposition of 3.2 to 8.8 kg/ha (2.9 to 7.9 lb/acre) per week increased foliar chloride content and damaged foliage of corn, with the higher deposition reducing the yield of grain by as much as 11 percent. They found similar results for soybeans, with bean yields reduced by as much as 7 percent at the highest deposition rate.

Table 4.2 Estimates of salt-drift deposition rates estimated to cause acute injury to vegetation

Species	Deposition above which injury is expected (kg/ha/week)
Crops and ornamental plants	
Zea mays (corn)	1.82
Glycine hispida var York (soybean)	7.28
Gossypium hirsutum (cotton)	8.0
Medicago sativa (alfalfa)	15.7
Forsythia intermedia var spectabilis (forsythia)	189.6
Phaseolus vulgaris var Pinto (pinto bean)	252.8
Albizzia julibrissin rosea (mimosa)	379.2
Koelreutaria paniculata (golden rain tree)	568.8
Native species	
Cornus florida (flowering dogwood)	1.2 (in Maryland)
	47.4 (in New York)
Fraxinus americana (white ash)	1.3 (in Maryland)
	18.9 (in New York)
Tsuga canadensis (Canadian hemlock)	9.4
Pinus strobus (white pine)	189.6
Quercus prinus (chestnut oak)	379.2
Robinia pseudoacacia (black locust)	379.2
Acer rubrum (red maple)	474.0
Hammamelis virginiana (witch hazel)	1042.8

Source: Adapted from Talbot 1979 and Hoffman et al. 1987.

Note: To convert kg/ha to lb/acre, multiply by 0.8924.

W. C. Hoffman et al. (1987) experimentally exposed cotton and cantaloupe in the arid environment near Palo Verde to foliar salt deposition rates of 8 to 415 kg/ha (7 to 370 lb/acre) per year total salt and alfalfa to depositions up to 829 kg/ha (740 lb/acre) per year. They found foliar injury in alfalfa only at the highest deposition level but no injury to

cantaloupe or cotton despite increases in foliar Na^+ and Cl^-. Yields of cantaloupe and alfalfa were not reduced, but 415 kg/ha (370 lb/acre) per year reduced cotton boll production and seed cotton yield by approximately 25 percent.

The burning quality of tobacco is known to be adversely affected by elevated Cl^-. Experiments have shown that burning quality, or length of time the leaf will burn, is impaired by increasing experimental doses of salt deposition (Mulchi and Armbruster 1983). A 17 percent reduction in burning quality was estimated for a Cl^- deposition of 5 kg/ha (4.5 lb/acre) per week, based on regression relationships of deposition, leaf chloride concentration, and leaf burn (Mulchi and Armbruster 1983).

Field studies of the effects of salt drift have been conducted at the Turkey Point plant and the coal-fired Chalk Point plant. Hindawi et al. (EPA-440/5-86-001) investigated field exposures of bean and corn plants to saltwater drift from a test cooling tower and power spray module at the Turkey Point plant. Salt concentrations in tissues of bean and corn plants increased with time during three weeks of exposure and decreased exponentially with distance from the salt drift source. Some injury to leaves was visible at the site of greatest exposure.

The coal-fired Chalk Point plant has a relatively high potential impact from natural-draft cooling towers because brackish water is used for cooling. Other than the Hope Creek plant, all nuclear plants with natural-draft towers use fresh water for cooling. Deposition rates at Chalk Point were measured at 12 monitoring sites at distances of from 1.6 km to 9.6 km (1 to 6 miles) from the towers during their initial 5 years of operation (Mulchi et al. 1982). No increased deposition resulting from cooling-tower operation was detected at these distances. Deposition rates at the sites ranged from about 0.5 to 1.2 kg/ha (0.4 to 1 lb/acre) per month for NaCl, which comprises most of the solids in the brackish cooling water. Monitoring sites, which were established to study effects on agricultural crops, were not located in areas closer to the towers because no active cropland was in these areas and because the plant, located on a peninsula on the Patuxent River, is bounded by water except to the north and north-northwest. Most drift probably deposits in the river.

A study of tobacco plants 3 years after Chalk Point cooling towers began operating failed to find any increase in leaf salt content that could be attributed to drift (Mulchi and Armbruster 1983). Chloride levels in tobacco and chloride and sodium levels in corn and soybeans at 1.6 km (1 mile), the closest distance crops were grown to the Chalk Point towers, were within the range of preoperational values and were no higher than levels found up to 9.6 km (6 miles) from the towers (Mulchi et al. 1982; Mulchi and Armbruster 1983).

4.3.4.1.3 Effects on Soils

Drift deposition also has the potential to damage vegetation by soil salinization. Soil salinization does not usually occur in areas where rainfall is sufficient to leach salts from the soil profile. In arid regions, however, such as at Palo Verde, cooling tower drift has the potential to increase soil salinity and thus affect native and agricultural plants (McBrayer and Oakes 1982). Salinity of irrigated soils in arid regions may also be increased by drift, even though such soils already have a high salinity resulting from salts in irrigation water and high evaporation rates. Responses of crop plants to soil salinity appear to be poorly correlated to their tolerance to foliar-applied salts (Grattan et al. 1981; Maas 1985).

In an experiment in a more humid environment, salts were applied to soils to simulate drift deposition from the Chalk Point coal-fired plant with brackish water cooling towers. One-time applications of 14-112 kg/ha (13-100 lb/acre) NaCl affected leaf Cl^- in corn and soybeans but resulted in no visible damage or reduction in yield (Armbruster and Mulchi 1984). These soil salt treatments also increased soil pH and extractable cations (Armbruster and Mulchi 1984), but leaching by winter precipitation returned soil to pretreatment status.

In humid environments, effects of drift deposition on soils appear transitory if they can be detected at all. Field measurements of the effects of the operating cooling towers at Chalk Point showed no changes in soil chemical elements at distances of 1.6 to 9.6 km (1 to 6 miles) (Mulchi et al. 1982). In a study of five saltwater cooling towers near Galveston Bay, Texas, salt deposition up to 746 kg/ha/year was found within 100 m (328 ft) of the towers, with levels decreasing to <52 kg/ha (46 lb/acre) per year at 434 m (1424 ft) (Wiedenfeld et al. 1978). Weekly deposition

ranged from 4.27 kg/ha (3.81 lb/acre) per week to 58.8 kg/ha (52.5 lb/acre) per week. In the survey, salt content of the soil at 104 m (341 ft) from the towers returned to previous levels when towers were shut down during the winter.

4.3.4.2 Plant-Specific Operational Data

Annual reports of environmental monitoring for vegetation damage at nuclear plants were reviewed. Vegetation monitoring included detailed measurements of vegetation structure and composition on permanent plots, aerial infrared photography with subsequent field surveys for vegetation injury, or general surveillance. Vegetation damage ranging from foliar chlorosis to defoliation can be identified on false-color infrared aerial photographs (NUREG/CR-1231). Vegetation monitoring for drift effects has been conducted at 18 nuclear plants. Most of the nuclear plants are not located close to agricultural areas, but six of the plants monitored crops, pasture, orchards, or ornamental vegetation. None reported visible damage to ornamental vegetation or reduction in crop yield (Table 4.3).

A detailed study at Palo Verde in Arizona showed that, after 6 years of operation, no change in agricultural soils attributable to cooling tower emissions occurred. Although significant increases or decreases occurred in some soil parameters at some monitoring locations, these changes appear unrelated to cooling-tower operation and were believed to have been caused by irrigation management, cropping, and fertilizer application. At the conclusion of the 6-year study, no significant effects on crops or native vegetation had been noted, and the study was discontinued (Halliburton NUS 1992).

Table 4.3 Results of nuclear facility monitoring for cooling-tower drift effects on terrestrial vegetation

Plant	Vegetation effects	Type of monitoring
	Natural draft	
Arkansas	No visible damage; no foliar chemical changes after one year	Aerial photography; foliar chemistry; orchard, native trees
Beaver Valley	No visible damage	Aerial photography; soil pH and conductivity; native vegetation
Byron	No visible damage	Aerial photography; crops; woody, ornamental, and native vegetation
Callaway	No visible damage	Aerial photography; permanent vegetation plots; native trees
Davis-Besse	No visible damage	Aerial photography; soil chemistry; native vegetation
Hope Creek	No visible damage after one year; no foliar chemical changes after one year	Ground survey; foliar chemistry; soil chemistry; native vegetation
Three Mile Island	No visible damage	Visual inspection; crops and native vegetation
Trojan	No visible damage	Aerial photography; pasture, ornamental and native vegetation
	Mechanical draft	
Catawba	Possible ice damage to loblolly pine < 61 m (200 ft) from towers	Aerial photography; ground survey; native trees
Duane Arnold	No visible damage	Visual inspection; native vegetation
Edwin I. Hatch	No visible damage	Aerial photography; permanent vegetation plots; native vegetation
Joseph Farley	No visible damage	Aerial photography; native vegetation

Palisades	Severe ice damage < 61 m (200 ft) from towers; some icing beyond 250 m (820 ft); sulfate injury < 150 m (492 ft) from towers; change in vegetation caused by damage to trees	Aerial photography; permanent vegetation plots; native vegetation
Palo Verde	No visible damage; foliar salt concentrations increased on site	Aerial photography; foliar chemistry; soil chemistry; crops and native vegetation
Prairie Island	Frequent ice damage to oaks adjacent to towers; change in canopy structure caused by ice damage; reduced viability in acorns from oaks near towers	Aerial photography; ground survey; acorn viability survey; native vegetation
River Bend	No visible damage	Aerial photography; permanent vegetation plots; native vegetation
Fort Saint Vrain	No visible damage	Aerial photography; crops; native vegetation
Washington	No foliar chemical changes	Foliar chemistry; soil chemistry; native vegetation

At the Palisades plant in Michigan, concern was expressed by owners of nearby fruit orchards about possible effects of elevated humidity on the incidence of disease, particularly apple scab, in their orchards. The concern was that increased humidity could result in the need for increased applications of disease-control sprayings and thus increase orchard operating costs. NRC staff recommended a survey program to assess impacts of cooling-tower moisture on yield, quality, and frequency of disease-control sprayings (NRC 1978). Weather conditions encouraging apple scab are temperatures of 17 to 24° C (63 to 75° F) and >85 percent relative humidity for 9 h or more. A study was conducted to determine these weather conditions near Palisades cooling towers and in more distant areas (Ryznar et al. 1980). Long-term weather records from weather stations outside the influence of the Palisades cooling towers were analyzed. In addition, a network of meteorological stations was established in the vicinity of the Palisades plant. No increase in weather occurrences favoring apple scab was observed that could be related to Palisades operation.

4.3.4.3 Conclusion

Monitoring results from the sample of nuclear plants and from the coal-fired Chalk Point plant, in conjunction with the literature review and information provided by the natural resource agencies and agricultural agencies in all states with nuclear power plants, have revealed no instances where cooling tower operation has resulted in measurable productivity losses in agricultural crops or measurable damage to ornamental vegetation. Because ongoing operational conditions of cooling towers would remain unchanged, it is expected that there would continue to be no measurable impacts on crops or ornamental vegetation as a result of license renewal. The impact of cooling towers on agricultural crops and ornamental vegetation will therefore be of small significance. Because there is no measurable impact, there is no need to consider mitigation. Cumulative impacts on crops and ornamental vegetation are not a consideration because deposition from cooling tower drift is a localized phenomenon and because of the distance between nuclear power plant sites and other facilities that may have large cooling towers. This is a Category 1 issue.

4.3.5 Terrestrial Ecology

This section addresses the impact of cooling tower drift on natural plant communities (Section 4.3.5.1) and the impact of bird mortality resulting from collisions with natural-draft cooling towers (Section 4.3.5.2).

4.3.5.1 Effects of Cooling-Tower Drift

This section addresses the extent to which natural plant communities near nuclear plants are affected by exposure to salts, icing, or other effects (e.g., fogging and increased humidity) caused by operation of cooling towers. The approach to evaluating this issue is the same as that used for evaluating the impact on agricultural crops in Section 4.3.4.

4.3.5.1.1 Overview of Impacts

The potential impacts of cooling tower operation on native vegetation are similar to those for agricultural crops, including salt-induced leaf damage, growth and seed yield reduction, and ice-induced damage (see Section 4.3.4). In addition, native vegetation may suffer changes in community structure (Talbot 1979) in response to ice damage or differences in species tolerances to drift. Increased fogging and relative humidity near cooling towers have little potential to affect native vegetation, and no such impacts have been reported.

The following standard of significance is applied to the effects of cooling tower operation on natural plant communities. The impact is of small significance if no measurable degradation (not including short-term, minor, and localized impacts) of natural plant communities results from cooling tower operation.

Species vary in their sensitivity to soil salinity and foliar salt deposition, and their tolerances of drift deposition are not well known. Curtis et al. (PPSP) determined that experimental exposure to saline cooling-tower drift for one growing season resulted in foliar damage to vegetation when leaf Cl^- levels were between 3145 and 9000 m g/g dry weight. These investigators also found that several species of trees growing under field conditions were not always as sensitive to salt deposition as they were under greenhouse conditions. Actual sensitivities of native trees may therefore be less than those shown in Table 4.2. Age of leaves also affects sensitivity to deposition. McCune et al. 1977 found that the youngest leaves of deciduous woody species and the year-old needles of conifers were more susceptible than leaves of other ages. Seasonal deposition, therefore, has the potential to affect these species groups differently. The most sensitive native species, flowering dogwood, shows injury from deposition above 1.2 kg/ha (1.1 lb/acre) per week, and the least sensitive species, witch hazel, shows injury above 1042.8 kg/ha (930.6 lb/acre) per week (Talbot 1979). Deposition rates near nuclear plant cooling towers, according to available deposition data, appear to be generally below the rate that would adversely affect dogwood.

Talbot (1979) reviewed studies of vegetation damage at nine industrial cooling tower installations. Three of the six installations having mechanical draft towers (one saltwater and two freshwater) produced some damage to native vegetation within 215 m (705 ft). Natural draft towers at three sites had no reported visible effects on vegetation. Natural draft cooling towers using brackish water at the coal-fired Chalk Point plant resulted in elevated chloride concentrations in vegetation after 1 year of tower operation (PPSP-CPCTP-18), but symptoms of salt toxicity in native trees had not been observed after 2 years of operation (Lauver et al. 1978), after which monitoring was terminated because of the absence of significant effects (C. L. Mulchi, University of Maryland, personal communication with H. Quarles, ORNL, Oak Ridge, Tennessee, March 15, 1995).

Impacts on native vegetation as a result of soil salinization (Section 4.3.4) are not expected except possibly in arid environments. Although according to McBrayer and Oakes (1982), the predicted annual salt deposition of 25 to 50 kg/ha (22 to 51 lb/acre) near the Palo Verde cooling towers could increase soil salinity enough to alter distribution of certain species because natural soil salinity is already close to their salt tolerances, a monitoring study conducted over the first 6 years of cooling tower operation showed no significant effects on native vegetation or crops (Halliburton NUS 1992).

4.3.5.1.2 Plant-Specific Operational Data

Vegetation monitoring at nuclear plants is described in Section 4.3.4. Of the 18 plants reviewed, visible vegetation damage resulting from cooling tower operation was reported for only the Catawba, Palisades, and Prairie Island plants, all with mechanical-draft towers (Table 4.3). At these facilities, damage has been reported primarily within 150 m of the towers. Although no vegetation damage was reported at Palo Verde, increased foliar salt concentrations were found on-site (Halliburton NUS 1992).

At the Catawba Plant a few loblolly pine trees adjacent to the cooling towers were apparently damaged by ice. Damage to the trees consisted of some browning of needles on trees nearest the towers.

At Palisades, monitoring conducted in response to observed vegetation damage included chloride and sulfate deposition and visual observation of damage. Vegetation damage resulted primarily from sulfate and was more extensive than at

any other nuclear facility because, at Palisades' unique location, the tops of the cooling towers are lower than the tops of forested dunes on the site. This unique position of the cooling towers contributes to interception of cooling tower emissions by dune vegetation. Vegetation injury ranged from visible signs to severe necrosis of leaves to near-total defoliation in areas with maximum impact. In 1975, severe icing from drift interception also caused extensive damage by breaking branches as well as trunks of trees (Rochow 1978). Approximately 8 ha (20 acres) was affected by sulfates and icing, including about 6 ha (15 acres) of forest. Sulfate damage resulted from addition of sulfuric acid to the cooling water. However, this practice was discontinued, thus significantly reducing the impacts; and the severe icing in 1975 may have resulted from unusual weather conditions combined with a possible cooling tower malfunction (Ryznar et al. 1980).

Vegetation damage was found to correlate with elevated rates of sulfate deposition from the Palisades towers (Rochow 1978); chloride deposition, however, was less than 1.0 g/m^2/month in areas of extensive vegetation damage and did not correlate with the damage. Sulfate deposition rates were 0.61 g/m^2/month between 700 and 1609 m (2296 and 5278 ft) and 9.0 g/m^2/month within 50 m (164 ft) of the tower. About 75 percent of the sulfate fell out within 145 m (129 ft) of the towers (Rochow 1978). Heaviest damage to vegetation was in areas receiving more than 5 g/m^2/month sulfate, but areas receiving 2 to 5 g/m^2/month also were heavily damaged. Areas receiving 1 to 2 g/m^2/month were damaged primarily in the upper portions of trees.

Monitoring at Prairie Island included aerial photography, ground surveys of vegetation, and acorn viability monitoring. Viability of acorns collected from red oak trees located near the mechanical-draft towers was low, although acorn production appeared normal. Icing from plume downwash, which occurred frequently, may have damaged developing embryos in the acorns, which take 2 years to develop (Richardson 1976; Richardson 1978). Ice also damaged some of the trees growing adjacent to the towers. Because the towers at Prairie Island have not been used for cooling during the winter since 1984, icing damage has been eliminated.

Monitoring at Palo Verde included drift deposition, soil chemistry, salt concentrations in vegetation, and aerial photography. Drift deposition up to 95.6 kg/ha (85.3 lb/acre) per year has occurred on the site within 1.6 km (1 mile) of the cooling towers. Amounts of approximately 25 to 50 kg/ha (22 to 45 lb/acre) per year were predicted to alter soil salinity enough to affect vegetation over the long term (McBrayer and Oakes 1982). Increases in soil sodium, potassium, or chloride content have been reported, but increases also occurred in some sites that were distant from the towers (Halliburton NUS 1992). Observed changes in soil chemistry at Palo Verde appeared to be unrelated to cooling tower operation, and no effects on vegetation were reported.

4.3.5.1.3 Conclusion

Monitoring results from the sample of nuclear plants and from the Chalk Point plant, in conjunction with the literature review and information provided by the natural resource agency and agricultural agencies in all states with nuclear power plants, have revealed no instances where cooling tower operation has resulted in measurable degradation of the health of natural plant communities. Observed vegetation damage caused by icing and cooling-tower drift at mechanical draft towers usually is minor and localized in small ares (e.g., Catawba and Prairie Island). Damage to native vegetation has not occurred at Chalk Point coal plant and the Hope Creek nuclear plant, which use brackish water for cooling and represent a comparatively high probability of impact from operation of natural draft towers. Therefore, damage at other nuclear plants with natural draft towers is unlikely. Damage from operation of mechanical-draft towers at Palisades was more extensive than for the other nuclear plants, but was limited to about 8 ha (20 acres) on the site. The damage resulted from Palisades unique location, the addition of sulfuric acid to cooling water, and possibly from a cooling tower malfunction combined with unusual weather conditions. The use of sulfuric acid was discontinued, significantly reducing the impact. Cooling tower drift in the arid environment at Palo Verde has not affected native species through soil salinization: no actual damage was reported over a 6 year study of cooling tower operation (Halliburton NUS 1992). The only potential mitigation measures would be to change to another cooling system or to modify the cooling towers to reduce the amount of drift. Because the impacts of cooling tower drift on native plants are expected to be of small significance at all plants and because the potential mitigation measures would

be costly, no mitigation measures beyond those implemented during the current term license would be warranted. Cumulative impacts on natural plant communities are not a consideration because of the distance between nuclear power plant sites and other facilities that may have large cooling towers. This is a Category 1 issue.

4.3.5.2 Bird Collisions with Cooling Towers

This section addresses the significance of avian mortality resulting from collisions of birds with natural-draft cooling towers at nuclear plants. Natural-draft towers, which are tall structures, cause some mortality, whereas mechanical-draft towers cause negligible mortality and are not addressed here. This issue was evaluated by reviewing the general literature for avian collision mortality associated with all types of man-made objects, as well as the monitoring studies conducted at six nuclear plants. The literature review is presented in Section 4.5.6.2. The significance of the mortality caused by cooling towers is determined by examining the actual numbers and species of birds killed and comparing this mortality with the total avian mortality resulting from other man-made objects and with the abundance of bird populations near the towers.

4.3.5.2.1 Overview of Impacts

Throughout the United States, millions of birds are killed annually when they collide with man-made objects, including radio and TV towers, windows, vehicles, smoke stacks, cooling towers, and numerous other objects. An overview of collision mortality for all types of man-made objects is included in the discussion of transmission lines in Section 4.5.6.2.

Avian mortality due to man-made structures is of concern if the stability of the local population of any bird species is threatened or if the reduction in the numbers within any bird population significantly impairs its function within the local ecosystem. Avian mortality resulting from collisions of birds with cooling towers is considered to be of small significance if the losses do not threaten the stability of local populations of any species and if there is no noticeable impairment of its function within the local ecosystem.

4.3.5.2.2 Plant-Specific Analysis

Monitoring of bird collisions has been done at several nuclear plants with natural draft cooling towers, including the Susquehanna plant near Berwick on the Susquehanna River in eastern Pennsylvania, the Davis-Besse plant on the shore of Lake Erie in north central Ohio, the Beaver Valley plant on the Ohio River in extreme western Pennsylvania, the Trojan Plant on the Columbia River in extreme northwestern Oregon, the Three Mile Island plant near Harrisburg in southeastern Pennsylvania, and the Arkansas Nuclear One plant on Dardanelle Lake in northwestern Arkansas. The following information was obtained from nuclear plant annual monitoring reports and from a few other sources, as cited.

At the Susquehanna plant, surveys were conducted on weekdays during spring and fall migration from 1978 through 1986. This plant's natural draft towers are 165 m (540 ft) tall and illuminated at the top with 480-V aircraft warning strobe lights. About 1500 dead birds (total for all survey years) of 63 species were found that had apparently collided with the cooling towers. Others were probably lost in the tower basin water during plant operation. Most of the birds were passerines (songbirds). Fewer collisions seemed to occur during plant operation, when cooling tower plumes and noise may have frightened birds away from the towers. From 1984 through 1986, eight dead bats were also found, including little brown myotis, red bat, and big brown bat.

At Davis-Besse, extensive surveys for dead birds were conducted from fall 1972 to fall 1979. Early morning surveys at the 152-m (499-ft-) tall cooling tower were made almost daily from mid-April to mid-June and from the first of September to late October. After the tower began operating in the fall of 1976, some dead birds were lost through the water outlets of the tower basin. A total of 1554 dead birds were found, an average of 196 per year. The dead birds included 1222 at the cooling tower, 222 around Unit 1 structures, and 110 at the meteorological tower. Most were night -migrating passerines, particularly warblers, vireos, and kinglets. Waterfowl that were abundant in nearby marshes and

ponds suffered little collision mortality. Most collision mortalities at the cooling tower occurred during years when the cooling tower was not well illuminated (1974 to spring 1978). After completion of Unit 1 structures and the installation of many safety lights around the buildings in the fall of 1978, collision mortality was significantly reduced (average of 236 per year from 1974 through 1977, 135 in 1978, and 51 in 1979). Diffusion of light from these safety lights may illuminate the cooling tower in such a way that birds can see and avoid it. Lights at nuclear plants may not confuse birds to the extent sometimes caused by lights on radio or TV towers (Section 4.5.6.2). Lights illuminating the Pilgrim Nuclear Station in Massachusetts apparently were not a problem to migrating birds, which were monitored by radar. The orientation, flight speed, and altitude of these birds appeared unaffected by the lights, although on one of nine nights, flight direction at the station was different from that in a control area and flight altitude was higher (Marsden et al. 1980).

At Beaver Valley, surveys were conducted in spring and fall from 1974 through 1978 at the natural draft tower. A total of 27 dead birds were found. At the Trojan Plant, surveys were conducted weekly in 1984 and 1988 at the 152-m 499-ft -) tall cooling tower, meteorological tower, switch yard, and generation building. No dead birds were found. At the 113 -m (371-ft-) tall cooling towers at Three Mile Island, a total of 66 dead birds were found from 1973 through 1975 (Temme and Jackson 1979). No dead birds were found at Arkansas Nuclear One, where monitoring at the natural-draft tower was done twice weekly from October 15 through April 15 in 1978-79 and 1979-80.

4.3.5.2.3 Conclusion

Existing data on cooling-tower collision mortality suggest that cooling towers cause only a very small fraction of the total bird collision mortality (see Section 4.5.6.2 for a review of this mortality). The relatively few nuclear plants having natural-draft towers in the United States (approximately 32 units), combined with the relatively low bird mortality at individual natural draft towers, shows that (1) these nuclear plant towers are not greatly affecting bird populations (see Section 4.5.6.2.1) and (2) their contribution to the cumulative effects of bird collision mortalities is very small. Mechanical-draft cooling towers, which are not nearly as tall as natural-draft towers, and other facilities pose little risk to migrating birds.

Local bird populations are apparently not being significantly affected by collision with cooling towers. Waterfowl and other birds that are commonly present as permanent or summer residents around nuclear plants do not frequently collide with the towers. Instead, a very high percentage of the collision mortalities occur during the spring and fall bird migration periods and involve primarily birds migrating at night. Studies that have been conducted at six nuclear plants, in conjunction with literature reporting total collision mortality (Section 4.5.6.2), show that (1) avian mortality associated with cooling towers is a very small part of the total mortality and (2) local bird populations are not being significantly reduced. Data on collision mortality were found for only 6 of the 20 nuclear plants with natural-draft cooling towers. Collision mortality at one or more of these plants may be greater than at the plants where surveys were conducted.

Avian mortality resulting from collisions of birds with cooling towers involves sufficiently small numbers for any species that it is unlikely that the losses would threaten the stability of local populations or result in a noticeable impairment of the function of a species within local ecosystems. There is no reason to believe that the annual mortality rate resulting from collision of birds with any cooling tower would be different during the license renewal term. Thus, avian mortality resulting from collision with cooling towers is of small significance. A potential method of mitigating avian morality would be to illuminate natural draft cooling towers at night. Because it is unlikely that the numbers of birds killed from collision with cooling towers are large enough to affect local population stability or impair the function of a species within the local ecosystem, consideration of further mitigation is not necessary. Because any contributions of cooling tower collisions to overall bird mortality have already been expressed in species populations, it is not expected that there will be any incremental or cumulative impact on bird populations from cooling tower collision mortality due to relicensing of current nuclear plants. The cumulative effect of bird mortality is further considered with transmission lines in Section 4.5.6.2. Avian mortality resulting from collision with cooling towers is a Category 1 issue.

4.3.6 Human Health

Some microorganisms associated with cooling towers and thermal discharges can have deleterious impacts on human health. Their presence can be enhanced by thermal additions. These microorganisms include the enteric pathogens *Salmonella* sp. and *Shigella* sp. as well as *Pseudomonas aeruginosa* and the thermophilic fungi (Appendix D). Tests for these pathogens are well established, and factors germane to their presence in aquatic environs are known and in some cases controllable. Other aquatic microorganisms normally present in surface waters have only recently been recognized as pathogenic for humans. Among these are Legionnaires' disease bacteria (*Legionella* sp.) and free-living amoebae of the genera *Naegleria* and *Acanthamoeba*, the causative agents of various, although rare, human infections. Factors affecting the distribution of *Legionella* sp. and pathogenic free-living amoebae are not well understood. Simple, rapid tests for their detection and procedures for their control are not yet available. The impacts of nuclear plant cooling towers and thermal discharges are considered of small significance if they do not enhance the presence of microorganisms that are detrimental to water and public health.

Potential adverse health effects on workers due to enhancement of microorganisms are an issue for steam-electric plants that use cooling towers. Potential adverse health effects on the public from thermally enhanced microorganisms is an issue for the nuclear plants that use cooling ponds, lakes, or canals and that discharge to small rivers. These plants are all combined in the category of small river (average flow less than 2830 m^3/s (100,000 ft^3/s) in Tables 5.18 and 5.19. These issues were evaluated by reviewing what is known about the organisms that are potentially enhanced by operation of the steam-electric plants.

Because of the reported cases of fatal *Naegleria* infections associated with cooling towers, the distribution of these two pathogens in the power plant environs was studied in some detail (Tyndall et al. 1983; see also Appendix D). In response to these various studies (Appendix D), many electric utilities require respiratory protection for workers when cleaning cooling towers and condensers. However, no Occupational Safety and Health Administration (OSHA) or other legal standards for exposure to microorganisms exist at present. Also, for worker protection, one plant with high concentrations of *Naegleria fowleri* in the circulating water successfully controlled the pathogen through chlorination before its yearly downtime operation (Tyndall et al. 1983).

Changes in the microbial population and in the use of bodies of water may occur after the operating license is issued and the application for license renewal is filed. Ancillary factors may also change, including average temperature of water resulting from climatic conditions. Finally, the long-term presence of a power plant may change the natural dynamics of harmful microorganisms within a body of water by raising the level of *N. fowleri*, which are indigenous to the soils. Increased populations of *N. fowleri* may have significant adverse impacts. On entry into the nasal passage of a susceptible individual, *N. fowleri* will penetrate the nasal mucosa. The ensuing infection results in a rapidly fatal form of encephalitis. Fortunately, humans in general are resistant to infection with *N. fowleri*. Hallenbeck and Brenniman (1989) have estimated individual annual risks for primary amebic meningoencephalitis caused by the free living *N. fowleri* to swimmers in fresh water, to be approximately 4×10^{-6}. Heavily used lakes and other fresh bodies of water may merit special attention and possibly routine monitoring for *N. fowleri*.

Thermophilic organisms may or may not be influenced by the operation of nuclear power plants. The issue is largely unstudied. However, NRC recognizes a potential health problem stemming from heated effluents. Occupational health questions are currently resolved using proven industrial hygiene principles to minimize worker exposures to these organisms in mists of cooling towers. NRC anticipates that all plants will continue to employ proven industrial hygiene principles so that adverse occupational health effects associated with microorganisms will be of small significance at all sites, and no mitigation measures beyond those implemented during the current term license would be warranted. Aside from continued application of accepted industrial hygiene procedures, no additional mitigation measures are expected to be warranted as a result of license renewal. This is a Category 1 issue.

Public health questions require additional consideration for the 25 plants using cooling ponds, lakes, canals, or small rivers (all under the small river category in Tables 5.18 and 5.19) because the operation of these plants may significantly enhance the presence of thermophilic organisms. The data for these sites are not now at hand and it is

impossible to predict the level of thermophilic organism enhancement at any given site with current knowledge. Thus the impacts are not known and are site-specific. Therefore, the magnitude of the potential public health impacts associated with thermal enhancement of *N. fowleri* cannot be determined generically. This is a Category 2 issue.

4.3.7 Noise Impacts

When noise levels are below the levels that result in hearing loss, impacts have been judged primarily in terms of adverse public reactions to the noise. Generally, power plant sites do not result in off-site levels more than 10 dB(A) above background. However, some sites have calculated impacts to critical receptors at this level and above. Noise level increases larger than 10 dB(a) would be expected to lead to interference with outdoor speech communication, particularly in rural areas or low-population areas where the day-night background noise level is in the range of 45-55 dB(A). Generally, surveys around major sources of noise such as large highways and airports have found that, when the day-night level increases beyond 60 to 65 dB(A) (FICN 1992), noise complaints increase significantly. Noise levels below 60 to 65 dB(A) are considered to be of small significance.

The principal sources of noise from plant operations are natural-draft and mechanical-draft cooling towers, transformers, and loudspeakers. Other occasional noise sources may include auxiliary equipment such as pumps to supply cooling water from a remote reservoir. Generally, these noise sources are not perceived by a large number of people off-site.

In most cases, the sources of noise are sufficiently distant from critical receptors outside the plant boundaries that the noise is attenuated to nearly ambient levels and is scarcely noticeable. However, during the original license application process, some of the sites identified critical receptors near plant boundaries that would experience noise levels greater than 10 dB above ambient. Those levels would increase the difficulty in outdoor speech communication. (The noise would require that people speak louder to communicate.) In no case is the off-site noise level from a plant sufficient to cause hearing loss.

Natural-draft and mechanical-draft cooling towers emit noise of a broadband nature, whereas transformers emit noise of a specific tonal nature at harmonics of the 60-Hz primary frequency. The frequencies with important intensities are 120, 240, 360, and 480 Hz. Loudspeakers emit noise at audible frequencies, generally below 5000 Hz. Because of the broadband character of the cooling towers, the noise associated with them is largely indistinguishable and less obtrusive than transformer noise or loudspeaker noise. Transformer noise is distinct because of its specific low frequencies. These low frequencies are not attenuated with distance and intervening materials as much as higher frequencies are; thus, low frequencies are more noticeable and obtrusive. However, at most sites employing cooling towers, transformer noise is masked by the broadband cooling tower noise. Loudspeakers would be a more intermittent source of noise.

Cooling tower and transformer noises do not change appreciably with time. No change in noise levels or their attendant impacts would be expected during the license renewal term.

License renewal does not add to the extent of noise impacts, either in frequency distribution or in intensity. No major changes in the noise profile of power plants is anticipated. The only possible source of added impacts would be the result of additional people who build homes near enough to the site that they are affected by noise. At the noise levels anticipated, no cumulative biological impacts are expected.

During the license renewal term, noise impacts will be the same as during the initial license term. These impacts were found to be generally not noticed by the public, thus noise impacts are of small significance. Consideration was given to mitigating these noise impacts. Because the principal sources of noise are cooling towers, transformers, and loudspeakers, these sources would be the focus of noise reduction efforts. Reduction in loudspeaker noise could be accomplished by restricting such use to emergencies only and using personal electronic pagers to contact personnel. Mitigation of the low-frequency noise from cooling towers or transformers is much more difficult and would require shielding by massive concrete structures or earthen berms. Because these noise reduction methods would be costly and

given that there have been few complaints and the noise impacts are so small, no additional mitigation measures are warranted for license renewal. This is a Category 1 issue.

4.4 Cooling Ponds

[**Prev** | **Next** | **Table of Contents**]

4.4.1 Introduction

Power plants that use cooling ponds compose a unique subset of closed-cycle systems in that they operate as once-through power plants [i.e., large condenser flow rates (Table 2.1)] that withdraw from and discharge to relatively small bodies of water created for the plant. Cooling ponds reduce the heat load to natural bodies of water from power plant operations without the construction and operational expenses of cooling towers. The natural body of water is not relied on for heat dissipation but is used as a source of makeup water to replace that lost to evaporation and as a receiving stream for discharges from the cooling pond.

4.4.1.1 Types of Cooling Ponds

The range of power plants that use cooling ponds or lakes represents a gradation from closed-cycle power plants sited on small cooling ponds to once-through power plants sited on large, multipurpose reservoirs. For the purpose of this section, a cooling pond will be defined as "a man-made impoundment that does not impede the flow of a navigable system and that is used primarily to remove waste heat from condenser water prior to recirculating the water back to the main condenser" (ORNL/NUREG/TM-226). Under this definition, nine nuclear power plants use cooling ponds: Braidwood, Clinton, Dresden, La Salle, H. B. Robinson, South Texas, Virgil C. Summer, Wolf Creek, and Turkey Point (actually an extensive system of canals for recirculating water). Effects of other power plants located on large, multipurpose reservoirs (e.g., Comanche Peak and William B. McGuire) are included in the analysis of once-through cooling systems in Section 4.2.

The surface areas of the cooling ponds associated with these nine plants range from 629 to 2924 ha (1573 to 7310 acres). Braidwood, Clinton, Dresden, La Salle, and South Texas all use large cooling ponds that rely on nearby rivers for makeup water. Both H. B. Robinson and Clinton recycle their heated effluent in cooling ponds that are impoundments of relatively small creeks. The Virgil C. Summer plant dissipates waste heat to Monticello Reservoir, which in turn receives makeup water from Parr Reservoir. Wolf Creek recycles its condenser cooling water through a cooling pond that receives its makeup water from nearby John Redmond Reservoir. Turkey Point recirculates condenser cooling water through a complex series of canals.

4.4.1.2 Cooling Pond Emissions and Effluents

Power plants sited on cooling ponds do not have unique effluents or emissions. The examples considered in this section represent open-cycle condenser cooling systems that use the man-made pond to recirculate cooling water. Discharges to natural waters are used primarily to control the buildup of dissolved solids, analogous to blowdown from cooling towers, and may or may not have elevated temperatures. The types of emissions and effluents are the same as those considered for once-through cooling systems in Section 4.2. Also, intake and discharge effects are regulated in the same way as for once-through cooling systems [i.e., through NPDES permits and, if needed, CWA Section 316(a) and (b) determinations (see Section 4.2 for a discussion of these regulatory mechanisms)].

Accelerated evaporation of water from a cooling pond produced by thermal loading from the power plant increases the concentration of total dissolved solids (TDS). Concentrations of TDS in cooling reservoirs average about 1.8 times those in the makeup waters (ORNL/NUREG/TM-226). Contaminants may also accumulate in the pond water and sediments. Accumulation of such water quality constituents as metals (copper or zinc) and chlorinated organic compounds in water, sediments, and aquatic biota has been cited as a potential issue for power plants located on cooling ponds.

4.4.2 Surface Water Use and Quality

This section and Section 4.4.4 review the past and ongoing impacts on aquatic resources of operation of nuclear power plants with cooling ponds. Any ongoing impacts will probably continue into the license renewal term because the cooling system design and operation are not expected to change. Judgments about the significance of these issues during the license renewal term are based on published information, agency consultation, and information provided by the utilities (Appendix F) applicable to every nuclear power plant in the United States. The conclusions reached in these sections apply to all nuclear power plants with cooling ponds.

4.4.2.1 Water Use

Nine nuclear power plants use off-stream ponds or lakes as cooling devices. Although these off-stream bodies of water were specifically designed to serve as cooling systems for temperature reduction before discharge into a river or reservoir, some (e.g., La Salle County Nuclear Station) provide recreational fishing opportunities in addition to cooling. The water-use issue associated with operation of cooling ponds is the availability of adequate streamflows to provide makeup water, particularly during droughts or in the context of increasing in-stream and off-stream uses. Two nuclear power plants, the Braidwood Station and the Wolf Creek Generating Station, have already experienced water-use conflicts.

Braidwood, which withdraws makeup water for its cooling pond from the Kankakee River, will face future water availability conflicts as Joliet, Illinois, becomes a potential downstream water user. Potential use of water upstream for irrigation may also affect the Kankakee River flow and the availability of water for the Braidwood facility. In response to other water-use demands, Braidwood, La Salle County, Dresden, and other nuclear facilities using cooling ponds or lakes, particularly those on the same river system as other thermoelectric generating facilities, may have to reevaluate their overall water requirements and tolerances to drought conditions. For example, Braidwood was forced to cease withdrawal from the Kankakee River during much of July and August 1988 because the flow of the river was below the level at which makeup withdrawals were permitted [Commonwealth Edison Company response to NUMARC survey (NUMARC 1990); Gary Clark, telephone interview with V. R. Tolbert, ORNL, Oak Ridge, Tennessee, July 5, 1990]. These plants could increase the sizes of their cooling ponds or adopt other measures to compensate for an inability to withdraw makeup water during low flows or because of competing water uses (Gary Clark, Illinois Division of Water Resources, personal communication to V. R. Tolbert, ORNL, Oak Ridge, Tennessee, July 5, 1990).

Probably the most important change in the consideration of water-use impacts since the initial licensing of most of the nuclear generating facilities has been the increased emphasis on in-stream flow for preservation of aquatic habitat, riparian (streamside) habitat, and associated biota. An example of potential water-use conflicts is associated with the withdrawal of makeup water by the Wolf Creek Generating Station in Kansas. Water for the Wolf Creek cooling lake is withdrawn from the Neosho River downstream of John Redmond Reservoir. Riffle (shallow water) areas of this river serve as habitat for a threatened fish species, the Neosho madtom. Makeup water withdrawals during severe drought conditions could affect the riffle habitat of this species (Harold Spiker, letter to G. F. Cada, ORNL, Oak Ridge, Tennessee, June 28, 1990).

Nuclear power plants that withdraw makeup water for cooling ponds from small bodies of water may need to curtail operations during drought periods or may experience future conflicts with other water users (including increasing emphasis on in-stream uses). This potential issue affects only a small number of existing plants, and mechanisms exist for resolving these conflicts (e.g., through derating the plant during temporary drought periods or, if longer-term solutions are required, by the periodic renewals of the plants' NPDES permits). Consultations with regulatory agencies indicate that water use conflicts are already a concern at two of the nine nuclear power plants with cooling ponds (Braidwood and Wolf Creek). Because water use conflicts may be of small or moderate significance during the license renewal period, this is a Category 2 issue for nuclear plants with cooling systems that utilize cooling ponds. The effects of consumptive water use on in-stream and riparian communities could also be of small or moderate significance, depending on the plant, and also are a Category 2 issue.

4.4.2.2 Water Quality

An issue associated with the operation of a cooling pond is potential alteration of the quality of both pond and natural receiving waters as a result of the addition and concentration of a variety of chemicals. As with all other types of condenser cooling systems, chemicals (e.g., chlorine) may be added to control biofouling and to inhibit scaling and corrosion in the condenser tubing. In addition, corrosion products are leached into the circulating water flow and may be concentrated in the recirculating system.

Discharges of heat and chemical contaminants are controlled by the NPDES permits that are issued and periodically renewed for each power plant (Section 4.2). Whereas the volume of water that is discharged to a natural body of water from a cooling pond may be comparable to that discharged as blowdown from a cooling tower, the concentration of dissolved solids is less. In ORNL/NUREG/TM-226, Parkhurst and McLain estimate that the average concentration of TDS is about 400 percent above ambient in the blowdown from cooling towers and about 180 percent above ambient in the discharge from cooling reservoirs. Greater quantities of biocides may also be needed for cooling towers than for cooling ponds because of the additional need to control biofouling on the cooling tower surfaces.

Larimore and McNurney (EPRI EA-1148) compared the water quality of a power plant cooling lake (Lake Sangchris in Illinois) with that of a nearby lake unaffected by power plant discharges. The most obvious differences resulted from the heat input and power-plant-induced circulation, which prevented seasonal thermal stratification in the cooling lake. With the exception of temperature, no water quality differences between the two lakes were attributed to power plant operations.

Becker et al. (EPRI EA-1054) examined available data from 14 cooling impoundments (all associated with fossil-fuel power plants) to identify water quality and ecological effects. These 14 cooling impoundments were selected from a population of 135 steam-electric power plant cooling ponds across the United States as those most likely to provide "worst-case" conditions for identifying impacts from power plant operation. Selection was based on load ratio, that is, impoundment surface area divided by rated plant generating capacity in megawatt (electrical). The authors assumed that cooling impoundments with low load ratios (relatively little dilution of power plant discharges) would be most likely to exhibit discharge-related water quality and ecosystem effects. Neither low DO concentration nor supersaturation of other dissolved gases was a problem, although oxygen deficits occurred in deeper waters of those cooling ponds that stratified. There was no indication that plant chlorination increased the chloride concentration of closed impoundments. Evaporation from a completely closed pond (no blowdown) resulted in gradual, long-term concentration of inorganic constituents, but levels did not exceed those commonly tolerated by aquatic life.

Potentially more important than the overall increase in TDS is the concentration of specific constituents--for example, heavy metals. The accumulation of heavy metals in cooling ponds via evaporation and bioconcentration has not been identified as a concern by the utilities or regulatory agencies, although specific studies appear to be uncommon. In a survey of 14 cooling impoundments, Becker et al. (EPRI EA-1054) found data on metals for only one. Trace metal concentrations were measured at North Lake, a cooling impoundment in Texas with one of the lowest load ratios in the study. North Lake is a completely enclosed system with essentially no drainage. As a result of high evaporative water losses, water levels cannot be maintained solely by precipitation, so makeup water must be pumped from the nearby Trinity River. In 15 years of operation, the cooling impoundment was refilled about 5.5 times, a situation that should lead to relatively high concentrations of water quality constituents. The North Lake data indicated that trace metals (copper, chromium, iron, lead, manganese, and zinc) were not accumulating in the impoundment, and the levels were too low to be toxic to the ecosystem (Sams 1976). On the other hand, a study of copper concentrations at eight nuclear power plants indicated that the highest chronically elevated concentrations in the discharge waters occurred at the H. B. Robinson Steam Electric Plant Unit 2, a plant with a cooling impoundment (ASTM STP 854). Examination of a variety of factors, including influent water quality and copper specification, led Harrison (ASTM STP 854) to conclude that elevated levels of copper in the H. B. Robinson plant effluent could be attributed to the low-pH water in the region, which caused relatively high leaching of copper from the condenser tubes. The naturally high corrosivity of the water appeared to be the cause of elevated copper concentrations at this plant. The copper-containing tubing was

subsequently replaced because of high leakage, eliminating copper loading to the cooling pond [Carolina Power & Light Company response to NUMARC survey (NUMARC 1990)].

Although power plant chlorination may result in the presence of chlorinated organic compounds, the potential accumulation of these materials appears to have been studied rarely. Sams (1976) investigated the possible buildup of total chlorinated organic compounds in the closed cooling impoundment of a fossil-fueled power plant but detected no quantitative differences between the pond and its makeup water source.

The Illinois Department of Conservation has expressed concern about the adverse influence of discharges from the Dresden Nuclear Power Station cooling pond on the temperature and water quality of the Kankakee River (Mark Frech, letter to G. F. Cada, ORNL, Oak Ridge, Tennessee, July 2, 1990). EPA has also pointed out that Dresden may have difficulty meeting temperature limits in the future as water quality improves and standards become more stringent (Robert Springer, letter to G. F. Cada, ORNL, Oak Ridge, Tennessee, June 29, 1990). With this exception, the effect of operation on water quality is not a concern at the nine nuclear power plants that use cooling ponds as part of their condenser cooling systems. In all cases, the NPDES permits and 316(a) determinations that limit the discharge of heat and other pollutants are periodically reevaluated and renewed by the EPA or state water quality permitting agencies, allowing existing or future water quality issues to be resolved in a timely manner.

The impacts of condenser cooling system discharges on water quality of cooling ponds are considered to be of small significance if water quality criteria (e.g., as contained in NPDES permits) are not violated and if aquatic organisms in the vicinity of the plant are not bioaccumulating metals or other contaminants. Based on review of literature and operational monitoring reports, consultations with utilities and regulatory agencies, and comments on the draft GEIS, degradation of water quality in cooling ponds has not been a problem at most existing nuclear power plants. Mitigation was effective at the one plant that experienced elevated metal levels during the current license period. Effects are considered to be of small significance for all plants. Heat is rapidly dissipated in the vicinity of the power plant so that far-field, cumulative effects would not be expected. No evidence of existing, significant accumulation of contaminants in or near cooling ponds was found in the literature or provided by regulatory agencies. No change in operation of the cooling system is expected during the license renewal term, so no change in effects of discharges on water quality of cooling ponds is anticipated. Effects of discharges to cooling ponds could be reduced by operating additional water treatment systems, greater flushing of the cooling pond/reservoir, or by reducing the plant's generation rate. However, because the effects of discharges on water quality of cooling ponds are considered to be impacts of small significance and because these changes would be costly, the staff does not consider the implementation of these potential mitigation measures to be warranted. Effects of condenser cooling water discharges on water quality of cooling ponds are a Category 1 issue.

4.4.3 Aquatic Ecology

As noted in Section 4.4.2, the concentrations of TDS in cooling ponds averages less than three times that in the makeup water. Such concentrations of most water quality constituents are unlikely to affect aquatic biota. However, elevated levels of particular constituents may be of greater concern. For example, formerly elevated copper concentrations in the effluent from the H. B. Robinson plant (Section 4.4.2) were implicated in increased deformities and reduced reproductive capacity in the bluegill population residing in the cooling pond (NUREG/CR-2822; ASTM STP 854). Harrison and Lam (NUREG/CR-2822) concluded that these sublethal effects were the result of leaching of copper from the condenser tubes by the low-pH water in the pond. Although the highest concentrations of copper in fish tissue were found in bluegills collected in the discharge area, tissue concentrations were also elevated in the intake site compared with an upstream control site. Following replacement of the copper-alloy condenser tubing, fish populations recovered and skeletal deformities disappeared [Carolina Power & Light Company response to NUMARC survey (NUMARC 1990)].

In addition to potential effects from water quality degradation, aquatic biota of cooling ponds may be affected by impingement, entrainment, and thermal discharges. These effects are the same as those considered for once-through cooling systems (Section 4.2.2), except that they mainly influence aquatic communities that did not exist before creation of the cooling pond; natural communities are affected to a lesser extent by the relatively small withdrawals and

discharges associated with makeup water and blowdown. In a review of impacts of cooling impoundments of fossil-fuel power plants, Becker et al. (EPRI EA-1054) detected no major detrimental impacts on fish populations from power plant operation. The qualitative effects observed included earlier seasonal spawning and faster growth rates, which the authors attributed to elevated water temperatures. Information was not adequate to determine quantitative power plant effects on fish populations in the 14 impoundments studied. Larimore and McNurney (EPRI EA-1148) compared fish populations of a cooling lake and a nearby noncooling lake. Largemouth bass in the cooling lake spawned earlier, grew faster, were more accessible to anglers in the winter, and had lower rates of parasitic infestation. Parkhurst and McLain (ORNL/NUREG/TM-226) reviewed effects of cooling reservoirs on fish populations. They concluded that (1) effects on game fish populations are generally insignificant or positive but rarely negative, (2) growth rates are generally similar to those of fish from other waters, (3) some species may spawn earlier in the heated environment, (4) many species are attracted to the heated areas during the winter and avoid those areas in the summer, and (5) the thermal tolerances of species inhabiting heated waters are often higher than those for the same species inhabiting ambient-temperature waters.

Consultations with regulatory agencies and nuclear utilities that operate cooling ponds have revealed some site-specific concerns. For example, the Virgil C. Summer Nuclear Station has experienced thermal-discharge-effect-related fish kills in recent summers in and around the heated water discharge bay (James A. Timmerman, Jr., letter to G. F. Cada, ORNL, Oak Ridge, Tennessee, July 2, 1990). These fish kills were localized; they do not appear to have had any adverse effect on the cooling pond population. The utility is investigating the specific causes of the fish kills to implement corrective actions [South Carolina Electric & Gas Company response to NUMARC survey (NUMARC 1990)]. Concerns about biological effects of inadequate in-stream flows below the Wolf Creek Generating Station, particularly during drought years, have been raised (Harold L. Spiker, letter to G. F. Cada, ORNL, Oak Ridge, Tennessee, June 28, 1990). This water-use issue is discussed in Section 4.4.2.1.

The operating experience of nuclear power plants using cooling ponds indicates that impacts on aquatic resources appear to be a function of unique characteristics of the plant or the environment and not generally the result of the cooling system technology. Water-use conflicts (Braidwood, Wolf Creek) and hot weather fish kills (Virgil Summer) could occasionally develop at many fossil-fuel and nuclear power plants. Elevated concentrations of trace metals, which should be most apparent in recirculating cooling ponds, were a concern at only one plant. In this example, elevated copper concentrations in the effluent are believed to have resulted from the leaching of copper from condenser tubing by naturally acidic water; the extent to which buildup of copper in the pond by the recirculation of cooling water also contributed to the subsequent biological effects was not determined. Because effects on the bluegill population have been eliminated by the replacement of the condenser tubing with noncopper alloys, recirculation of residual copper in the cooling pond does not appear to be a problem.

Water quality and aquatic ecology issues for nuclear power plants that use cooling ponds, are summarized in Table 4.4. As noted for ower plants with once-through cooling systems in Section 4.2.3.2, operational experience indicates that most early aquatic resource concerns have been found to be of small significance at all sites, and no mitigation measures beyond those implemented during the current term license would be warranted. For the reasons given in Section 4.2.2, these are Category 1 issues. However, entrainment and impingement of fish and thermal discharge effects are of sufficient concern on large cooling ponds that support valued aquatic resources that they continue to be examined in detail as part of CWA Section 316(a) and (b) demonstrations. Section 316(a) or (b) determinations are pending for two of the nine nuclear power plants with cooling ponds (Braidwood and Clinton). Further, changes in aquatic communities of either the cooling ponds or source bodies of water could warrant reexamination of entrainment, impingement, or heat shock effects at any of the plants before the time of license renewal. For some plants, the large volumes of water withdrawn, heated, and discharged back to the receiving water may cause adverse effects to fish populations during the license renewal term. Because impacts of fish entrainment and impingement and of thermal discharge effects could be small, moderate, or large, depending on the plant, these are Category 2 issues for nuclear plants that use cooling ponds.

Table 4.4 Significance of aquatic resources impacts for license renewal of existing nuclear power plants that use cooling ponds

Issue	Impact significance[a]
Water quality, hydrology, and use	
Water-use conflicts	2
Altered current patterns at intake and discharge structures	1
Altered salinity gradients	1
Temperature effects on sediment transport capacity	1
Altered thermal stratification of lakes	1
Scouring due to discharged cooling water	1
Eutrophication	1
Discharge of chlorine or other biocides	1
Discharge of metals in waste water	1
Discharge of sanitary wastes and minor chemical spills	1
Effects of consumptive water use and riparian communities	2
Aquatic ecology	
Impingement of fish	2
Entrainment of fish, early life stages	2
Entrainment of phytoplankton and zooplankton	1
Thermal discharge effects	2
Cold shock	1
Thermal plume barrier to migrating fish	1
Distribution of aquatic organisms	1
Premature emergence of aquatic insects	1
Stimulation of nuisance organisms (e.g., shipworms)	1
Losses from predation, parasitism, and disease among organisms exposed to sublethal stresses	1
Gas supersaturation (gas bubble disease)	1
Low dissolved oxygen in the discharge	1
Accumulation of contaminants in sediments or biota	1

[a]A 1 means that the impact is expected to be of small significance at all sites. A 2 means that the impact may be of moderate or large significance at some sites.

4.4.4 Terrestrial Ecology

The issue evaluated in this section is the extent to which vegetation and wildlife are affected by increased fogging, humidity, and icing near cooling ponds and by water contaminants that may be present in the ponds. The primary impacts of cooling ponds on terrestrial ecological resources occurred when the ponds were constructed and filled, resulting in flooding and loss of terrestrial plant and animal communities. Potential impacts during plant operation include exposure of terrestrial habitats near the ponds to increased levels of humidity, icing, and fog. Also, waterfowl and other wildlife that use the ponds may be exposed to increased levels of dissolved solids and other contaminants released from the power plant. Fogging, humidity, icing, and the presence of dissolved solids and other contaminants that might be present in or at cooling ponds are of concern if they are present at levels that threaten the stability of local wildlife populations or vegetation communities in the vicinity of the cooling ponds. If there is no threat to the stability of local wildlife populations or vegetation communities, then any impact is considered of small significance.

These potential impacts apparently have not been a problem at any plant with cooling ponds. No significant damage to or loss of vegetation has been reported to result from increased humidity, fog, or icing. Without damage to vegetation, wildlife populations should not be affected. Water quality in the ponds is not being degraded to the extent that aquatic life is adversely affected (Sections 4.4.2 and 4.4.4). Therefore, wildlife using these ponds should not be significantly affected by changes in water quality or by loss of aquatic food or prey. Bioaccumulation of contaminants in the bodies

of wildlife predators feeding on aquatic biota is not expected to be a problem because of the very low concentrations of contaminants. Because no threat to the stability of local wildlife populations or vegetation communities is found for any cooling pond, the impacts are found to be of small significance. Potential mitigation measures would include excluding wildlife (e.g., birds) from contaminated ponds, converting to a dry cooling system, or reducing plant output during fogging or icing conditions, the impacts are found to be so minor that consideration of additional mitigation measures is not warranted. These effects of cooling ponds are so minor and so localized that cumulative impacts are not a concern. This is a Category 1 issue.

4.5 Transmission Lines

[**Prev** | **Next** | **Table of Contents**]

Impacts of transmission lines result from their maintenance, electromagnetic fields, corona, and rights-of-way (ROW). Their impacts on air quality (Section 4.5.2), land use (Section 4.5.3), human health (Section 4.5.4), surface water quality and aquatic cology (Section 4.5.5), terrestrial ecology (Section 4.5.6), floodplains and wetlands (Section 4.5.7), and historic and aesthetic resources (Section 4.5.8) are assessed in this section. As at the construction permit stage, the transmission corridor of concern is that which was constructed between the plant switchyard to its connection with the existing transmission system. No new transmission line construction is planned in existing or new corridors. The types of impacts of transmission lines during the license renewal period will be the same as those during the first 40 years of operation.

4.5.1 Introduction

Transmission lines use voltages of about 115 or 138 kV and higher. In contrast, local or area distribution lines use voltages below 115 or 138 kV. Only transmission lines are discussed in this document. Extra-high-voltage transmission lines operate at 345 to 800 kV, whereas ultra-high-voltage (UHV) lines operate at 1000 kV and above. Lines up to 765 kV, a voltage occurring primarily in the eastern United States, are in commercial operation, whereas UHV lines are still in the testing stage of development. The principal advantage of higher-voltage lines is that they can transmit proportionately more power than can lower-voltage lines.

Detailed descriptions of transmission lines and basic electrical concepts are provided by ORNL-6165, DOE/BP-945, and BNWL-1774. Typical transmission line structures, shown in Figure 4.1, range in height from about 20 to 52 m (65 to 170 ft) and provide average spans (the distance between structures) of about 106 to 350 m (350 to 1150 ft). The structures support a three-phase system of conductors and two ground wires above the conductors. The ground wires intercept lightning strikes to prevent the strikes from hitting the conductors and adversely affecting power system operation. The most common structure types are the H-frame and lattice; single-pole and guyed-Y types are less common. The H-frame is usually made of wood and is used for lower-voltage lines. The metal lattice structure is capable of bearing more weight than the H-frame, allowing greater span length, higher-voltage lines, and more circuits for a given width of ROW.

Transmission lines must be inspected periodically to detect any deterioration of or damage to line components. This inspection can be done from the ground but is often done from a helicopter. Maintenance or repairs of power lines may require that vehicles gain access to the lines.

Electric and magnetic fields, collectively referred to as electromagnetic field or EMF, are produced by operating transmission lines. EMF strength at ground level varies greatly under these lines, generally being stronger for higher-voltage lines, a flat configuration of conductors (as opposed to, for example, the delta configuration), relatively flat terrain, terrain with no shielding obstructions (e.g., trees or shrubs), and a closer approach of the lines to the ground. At locations where field strength is maximum, measured values under 500-kV lines often average about 4 kV/m, but sometimes exceed 6 kV/m. Maximum electric field strengths at ground level are 9 kV/m for 500-kV lines and 12 kV/m for 765-kV lines (DOE/BP-945).

Measured magnetic field strengths at the location of maximum values beneath 500-kV lines often average about 70 mG (milligauss). During peak electricity use, when line current is high, the field strength may peak at 140 mG (about 1 percent or less of the time) (DOE/BP-945).

The term "corona" generally refers to the electrical discharges occurring in air subjected to the strong electric fields adjacent to phase conductors. Corona generally is not a problem at voltages below 345 kV. Corona results in audible noise, radio and TV interference, energy losses, and the production of ozone and oxides of nitrogen.

An ROW must be acquired by the utility to prevent certain land uses and vegetation growth from interfering with transmission line operation. To ensure power system reliability, the growth of tall vegetation under the lines must be prevented (by cutting or herbicides) to avoid physical interference with lines or the potential for

Figure 4.1 Examples of typical transmission line towers. *Source:* DOE/BP-945.

short-circuiting from the line to the vegetation. At the edge of ROW, trees that could topple onto the lines must be removed.

ROW maintenance is described in greater detail by FWS/OBS-79/22, ORNL-6165, BNWL-1774, and Byrnes and Holt (1987).

4.5.2 Air Quality

Small amounts of ozone and substantially smaller amounts of oxides of nitrogen are produced by transmission lines during corona, a phenomenon that occurs when air ionizes near isolated irregularities on the conductor surface such as abrasions, dust particles, raindrops, and insects. Several studies have quantified the amount of ozone generated and concluded that the amount produced by even the largest lines in operation (765 kV) is insignificant (SNYPSC 1978; Scott-Walton et al. 1979; Janes 1980; Varfalvy et al. 1985). Monitoring of ozone levels for 2 years near a Bonneville Power Administration 1200-kV prototype line revealed no increase in ambient ozone levels caused by the line (Bracken and Gabriel 1981; DOE/BP-945). Ozone concentrations generated by transmission lines are therefore too low to cause any significant effects. The minute amounts of oxides of nitrogen produced are similarly insignificant. A finding of small significance is supported by the evidence that production of ozone and oxides of nitrogen are insignificant and does not measurably contribute to ambient levels of those gases. Potential mitigation measures (e.g., burying transmission lines) would be very costly and would not be warranted. This is a Category 1 issue.

4.5.3 Land Use

4.5.3.1 Overview of Impacts

The concerns addressed by this section involve the extent to which license renewal and up to an additional 20 years of plant operation will preclude alternative uses of the transmission line corridor and the relative value that should be placed on such alternative uses. At the time of a license renewal application the transmission corridor and lines will have been in place for well over 20 years, having been initially constructed to furnish power to the site for construction of the plant. Even after cessation of plant operation the transmission line to the site would continue to be used to bring power in to the site during decommissioning. It is likely that a utility would locate new generating capacity on a site and utilize the existing transmission corridor. The site and transmission corridor are valuable assets for the utility. Therefore, the most likely scenario is that regardless of whether a license is renewed it should be anticipated that a transmission corridor will continue in use for the transmission of power indefinitely.

The issue addressed by this section is the extent to which existing transmission lines will, after relicensing, continue to preclude productive use of land or interfere with land uses (e.g., cultivation). Impacts are expected to be no different from those that have occurred during past power line operation. Impacts are described and assessed by reviewing the published literature reporting monitoring data on this topic. No monitoring data on land-use impacts were found that deal with transmission lines specifically associated with nuclear plants. However, because transmission lines associated

with nuclear plants are no different from lines associated with other types of generating facilities, literature on any type of transmission line is applicable to the analysis in this section.

The impact of transmission lines on land use resulting from license renewal is considered of small significance if there is no increase in the amount of land committed to the corridor right-of-way and if there are no major changes in the use patterns of the corridor resulting from renewal of the operating license. Alterations in the corridor path could result in impacts of moderate to large significance. Relocating the transmission corridor could result in large land use impacts. There is no basis to believe that any alteration in a transmission corridor would be made in conjunction with license renewal.

The presence of a transmission line and its ROW precludes certain land uses on the ROW that could bring economic gain to the landowner and decreases the profits of forestry, agricultural, orchard, and vineyard operations. However, the landowner has been compensated to some extent for these economic losses by the initial purchase of the ROW easement or, in some cases, by purchase of the land itself.

The construction of buildings or any other permanent structures that could interfere with transmission line operation is usually prohibited on a power line ROW. In contrast, several land uses can occur on ROW without endangering line operation and are usually not restricted by the ROW easement, including hiking, hunting, off-road vehicle use, grazing, agricultural cultivation, irrigation, and roads. Power-line corridors on private property may sometimes increase the frequency of trespassing.

In rural areas, the primary impact on land use is continuing interference with agricultural cultivation, orchards, vineyards, spraying, and irrigation. Some mobile irrigation facilities are very long and may cover an entire field or a large part of the field in one operation (Varner and Patel 1984). The presence of a transmission line structure in such a field may require that the irrigation facility be segmented into two or more independent pieces. Such segmentation increases the labor requirements and the costs of the irrigation facility. Aerial spraying of an agricultural field is restricted by transmission lines; spraying costs may be increased, and the extra maneuvers that the aircraft pilot must make to avoid the lines may lessen the effectiveness of the pesticide coverage.

Impacts on crop production that may have been caused by transmission line interference with aerial spraying have been reported by one field study of cotton, rice, and soybean fields crossed by a 500-kV line in eastern Arkansas (Parsch and Norman 1986). This study hypothesized that crop yields could be reduced either by EMFs (see Section 4.5.6.3) or by inadequate aerial spraying directly under the power lines. Only cotton yields were found to be reduced: 15 percent less lint was produced under the lines than 150 ft from the lines. The resulting loss of income from cotton was estimated as $85.25 per year for an 1100-ft (335-m) span of the lines, based on a 15 percent yield reduction and an average lint yield of 480 lb/acre. The field sampling and statistical analyses were extensive; the observed yield reduction appeared to be real rather than a sampling error. However, the study could not determine whether the EMF or line interference with aerial spraying caused the yield reduction.

The presence of a transmission line structure in any agricultural field, irrigated or not, will continue to exclude land from production and increase the time and money required to perform weed control, cultivation, and harvesting. The major (e.g., 70-90 percent) economic cost results from the exclusion of otherwise productive land from cultivation. The amount of land area affected depends on the structure type and size, the type of crop, and the agricultural practices involved (Grumstrup et al. 1982; EPRI WS-78-141). For lattice-type structures 8 to 9.8 m^2 (26 to 32 ft^2) at the base, the exclusion of productive land varies from about 488 to 976 m^2 (1600 to 3200 ft^2) for each structure. Operations for cultivating some types of crops can be conducted beneath structure bases if the structure is large enough, thus minimizing losses. The presence of guy wires significantly increases the area of land excluded from production, while non-guyed single-pole and H-frame structures have about half as much impact as lattice structures (Grumstrup et al. 1982). Minor additional costs result from the maneuvering necessary for farm machinery to avoid tower legs. Lattice structures and guyed structures interfere more with farming practices than do pole-type structures.

Costs also depend on the relative locations of transmission line structures within fields (Table 4.5). A study of corn, soybean, wheat, oats, buckwheat, and hay fields in Ontario found that the amount of land excluded from production increased in the following order of structure locations: (1) straddling a fence row (minimal impact); (2) adjacent to a fence row; (3) adjoining the headland (the end of the field where the tractor turns) but in the main part of the field; (4) midfield; and (5) within the headland, near, but not adjacent to, a fence row (maximum impact) (EPRI WS-78-141). In tobacco fields, equipment operations differed from those in grain fields, and structures in midfield obstructed cultivation on about twice as much land area as did structures in the headland (Scott 1982). For a variety of grain crops, the economic losses caused by power lines were accounted for by the following factors: time lost--about 30 percent of the costs; land excluded from production--about 60 percent; damaged crop costs--about 2 percent; and material loss--about 8 percent (EPRI WS-78-141). In vineyards, orchards, and tobacco fields, about 75 to 95 percent of the total costs resulted from the continuing exclusion of land from production (EPRI WS-78-141; Scott 1982). In general, the economic losses associated with transmission line structures are closely related to the value of the affected crop, and the percentage of total economic loss resulting from land lost to cultivation is proportionately higher for higher value crops (Scott 1982). Tobacco, orchard, and vineyard crops have relatively high value per acre; grain crops have lower value.

Utilities sometimes locate transmission lines in agricultural areas rather than wooded areas to minimize maintenance costs. Although utilities pay a higher price for ROW on agricultural land, overall costs are minimized by avoiding the higher long-term costs of ROW vegetation maintenance that would be necessary in wooded areas (EPRI WS-78-141).

The potential impact of transmission lines on land use differs among nuclear plants in different geographic regions because land uses (e.g., different types of agricultural crops) are different in different regions. The type and extent of the impacts of power lines on land use are relatively well known, and no monitoring of land-use impacts has been done for any specific nuclear plant.

Table 4.5 Estimated losses in crop profits caused by a lattice structure[a]

	Structure location	
Crop	**Midfield**	**Headland**
Tobacco	$356	$132
Peach orchard[b]	95	84
Vineyard[b]	117	53
Wheat	15	--
Soybeans	18	--
Grain corn	25	--
Silage corn	30	--

[a]The currency is the Canadian dollar 1977-1980. The structure is 8.5 x 8.5 m (28 by 28 ft) at the base and its orientation is square to the crop rows as opposed to diagonal to crop rows.
[b]The midfield value is based on not being able to drive equipment under structures and is an average of several midfield variations of structure positioning.

Sources: EPRI WS-78-141; Scott.

4.5.3.2 Conclusion

There is no basis to believe that the renewal of any operating license will change existing land use in the transmission line corridor either in terms of the amount of land committed or activities taking place within or adjacent to the corridor. For this reason, the staff finds that the impacts of transmission lines on land use attributable to license renewal is of small significance. Ongoing land use impacts would be expected to continue, e.g., constraints on agricultural activity. Although transmission line towers prevent some land from being cultivated or grazed, the amount of land area involved represents only a very small fraction of existing cropland and pasture in the vicinity of transmission lines. Therefore, the reduction in total harvest or livestock production typically has no significant impact on individual farm production or on overall production in larger regions such as townships or counties. The interference with aerial

spraying caused by transmission lines can affect an area that is larger than that of the tower site, but the yield in this larger area would not be expected to be reduced by more than a small fraction (e.g., a 15 percent yield reduction in cotton).

The presence of transmission lines does not cause additional permanent loss of farmland (in the sense that farmland is lost, for example, to parking lots and buildings during urban development). Any restrictions on land use within the corridor right-of-way would have been imposed and compensated for as necessary years earlier. Additional mitigation might require removal of wires, towers, and tower bases so that the entire area previously occupied by towers could be used for farming. Because such mitigation would be costly and would provide little environmental benefit, further consideration of mitigation is not warranted. The significance of any impacts is so minor and localized that cumulative impacts are not an issue. This is a Category 1 issue.

4.5.4 Human Health

The two human health issues related to transmission lines are the acute effect, shock hazard, and the potential for chronic effects from exposure to electric and magnetic fields. As stated previously, the transmission line of concern is that between the plant switchyard and the intertie to the transmission system. Transmission lines are necessary to transfer energy from all types of electrical generating facilities to consumers. Therefore, these issues are generic to the 118 nuclear power plants. Issues are evaluated by referral to the National Electric Safety Code [NESC (1981)] for the shock hazard issue and a review of relevant literature for the issue of potential chronic effects from exposure to the electric and magnetic fields surrounding transmission lines.

EMFs resulting from 60-Hz power transmission lines fall under the category of nonionizing radiation. An example of ionizing radiation is the X-ray. Much of the general population has been exposed to power line fields since near the turn of the century. However, except for the concern about electrical shock from insulated conductors such as fences, there was little concern about health effects from such exposures until the 1960s. A series of events during the 1960s and 1970s heightened public interest in the possibility of non-shock-related health effects from nonionizing radiation exposures and resulted in increased scientific investigation in this area (Wilson et al. 1990). Then, in 1979, results of an epidemiological study suggested a correlation between proximity to high-current wiring configurations and incidence of childhood leukemia (Wertheimer and Leeper 1979). This report resulted in additional interest and scientific research; however, no consistent evidence linking harmful effects with 60-Hz exposures has been presented.

4.5.4.1 Acute Effects (Shock Hazard)

Primary shock currents are produced mainly through direct contact with conductors and have effects ranging from a mild tingling sensation to death by electrocution. Tower designs preclude direct public access to the conductors. Secondary shock currents are produced when humans make contact with (1) capacitively charged bodies such as a vehicle parked near a transmission line or (2) magnetically linked metallic structures such as fences near transmission lines. A person who contacts such an object could receive a shock and experience a painful sensation at the point of contact. The intensity of the shock depends on the EMF strength, the size of the object, and how well the object and the person are insulated from ground.

Design criteria that limit hazards from steady state currents are based on the NESC (1981), adherence to which requires that utility companies design transmission lines so that the short-circuit current to ground, produced from the largest anticipated vehicle or object, is limited to less than 5 mA. In practice, this limits the electric field near roadways to about 7-8 kV/m. No similar code exists for the limitation of the magnetic fields of transmission lines; however, because of concerns about the safety of magnetic fields, several states have created their own regulations. See Nair et al. (1989) for a review of these regulations.)

With respect to shock safety issues and license renewal, three points must be made. First, in the licensing process for the earlier licensed nuclear plants, the issue of electrical shock safety was not addressed. Second, some plants that received operating licenses with a stated transmission line voltage may have chosen to upgrade the line voltage for reasons of efficiency, possibly without reanalysis of induction effects. Third, since the initial NEPA review for those

utilities that evaluated potential shock situations under the provision of the NESC, land use may have changed, resulting in the need for a reevaluation of this issue.

The electrical shock issue, which is generic to all types of electrical generating stations, including nuclear plants, is of small significance for transmission lines that are operated in adherence with the NESC. Without review of each nuclear plant transmission line conformance with NESC criteria, it is not possible to determine the significance of the electrical shock potential. This is a Category 2 issue.

4.5.4.2 Chronic Effects

4.5.4.2.1 Results of Ongoing Research

Substantial scientific evidence from laboratory studies funded primarily by DOE and EPRI indicates that extremely low -frequency (ELF) electric and magnetic fields can, under certain conditions, cause biological effects (Wilson et al. 1990; Polk and Postow 1986; Adey and Lawrence 1984; Chiabrera et al. 1985; EPA/600/6-90/005A; Carpenter and Ayraptyan 1994). The importance of these effects for humans who are exposed to transmission line fields is not clear. Perhaps the greatest deficiency in understanding at this time is the lack of a mechanistic theory capable of predicting biological effects from low-level EMF exposures (EPA/600/6-90/005A). Without an understanding of how these EMF fields are interacting with biological functions, the knowledge gained from scientific studies is of limited value both in evaluating the importance of the study results and in devising rational protection strategies for the public and for utility workers.

At exposure levels capable of producing relatively high current densities (10 to 100 mA/m^2), a substantial body of evidence has been accumulated indicating that EMF fields may influence biological function (IRPA/INIRC 1990). Such exposures have been suggested to induce chromosome aberrations, alter the distribution in molecular weights during protein synthesis, inhibit production of melatonin, alter calcium binding in brain tissue, influence RNA transcription, and produce a variety of other effects (OTA-BPA-53 1989). Questions concerning the potential carcinogenic effects of EMF field exposure have been raised as a result of suggestive epidemiological findings and some laboratory experiments. Two currently accepted models of cancer are the initiation-promotion paradigm (Easterly 1981; Stevens et al. 1990). Currently, most investigators conclude that EMF fields are not likely to act as initiators because they have not been shown to cause genetic damage (Aldrich and Easterly 1987). EMF effects on RNA transcription, however, could imply increased reduction of oncogene products, and some investigators consider such data to be indicative of genetic effects (Goodman et al. 1983; Goodman et al. 1987; Goodman and Henderson 1986, 1988). Work is in progress on an attempt to replicate the studies suggesting modification of transcription by EMF. However, attempts thus far have been unsuccessful. Moreover, it has not been shown that EMF fields are cancer promoters, but the presence of some reported EMF bioeffects reveals the need for further study of this issue (Byus et al. 1987; Cain et al. 1986).

The EMF epidemiologic literature has been reviewed extensively (Aldrich and Easterly 1987; Ahlbom; Coleman and Beral 1988; EPA/600/6-90/005A; NRPB 1992). The strongest evidence of an association between certain forms of cancer and exposure to magnetic fields comes from the studies of childhood cancers, namely leukemia, cancer of the central nervous system (CNS), and lymphoma.[1] Several studies have found somewhat elevated, statistically significant risks and elevated nonsignificant risks for these three site-specific cancers in children for whom magnetic fields either have been estimated by the types of wires near their homes or have been measured at 2 mG (0.2 m T) or more. However, there are contradictory results within these same studies, and dose-response relationships could not be substantiated, except in Savitz et al. (1988), based upon limited information on wiring codes. [Savitz and Kaune (1993) have offered an improved analysis of this work.] Furthermore, little information exists on personal exposure and length of residency in the EMFs. Additional but weaker evidence of an association between leukemia, cancer of the CNS, and perhaps cancer of other sites comes from the occupational studies of EMF exposure.

The studies of residential adult exposures to EMFs also provide mixed evidence of a risk of leukemia, mainly because of lack of power or low exposure to levels of EMFs that are hypothesized as being associated with cancer. For the same

reasons, these studies cannot be used as support for denying that such an association exists. However, the case control study of cancer in Colorado residents (Wertheimer and Leeper 1982) does support an association with CNS cancer and lymphoma if proximity to high-current electrical wiring configurations is assumed to be an adequate surrogate for exposure.

A careful review of the epidemiological studies involving leukemia, lymphoma, and cancer of the CNS shows a pattern of response that suggests, but does not prove the possibility of, a causal link. Evidence from a large number of biological test systems shows that these fields induce some biological responses in laboratory settings. However, the explanation of which biological processes are involved and the way in which these processes could causally relate to each other and to the induction of malignant tumors is not understood.

4.5.4.2.2 Transmission Line Exposures Relative to Domestic Exposures

An important question regarding regulations is whether transmission line exposures contribute significantly to total EMF field exposures. In most cases, fields produced inside the home by appliances and electrical wiring exceed contributions from transmission line fields. Exceptions to this rule are individuals living adjacent to high-voltage transmission line ROW. Also relevant is the fact that exposures to transmission line fields are considered more continuous than those to appliance fields because transmission line fields permeate large areas (e.g., an entire home). Fields generated by appliances are generally more localized, resulting in intermittent exposures as individuals move around and as the appliances are turned on and off.

Some comparisons (of induced currents) among transmission line exposures, domestic exposures, and exposures used in bioeffects experiments can be made using induced current density as an exposure metric. According to data provided in OTA-BPA-53, field strengths on the ROW of a 500-kV line induce body currents that are higher than those induced by domestic exposures produced by typical electrical appliances. Comparison with bioeffects experiments (OTA-BPA-53) shows that while current densities in many bioeffects experiments are higher than those typically induced by household exposures, some are significantly less. These comparisons are based, however, on average current densities predicted in humans, because EMF dosimetry has not advanced to the point of determining specific current densities in various tissues and organs. Nor has mechanistic understanding identified what field characteristics are important biologically.

4.5.4.2.3 Conclusion

Potential chronic effects are unquantified at this time. Subsequent to the 1992 National Energy Policy Act, a sequence of events relative to ELF research took place. The National Institute of Environmental Health Sciences (NIEHS) was made responsible for directing the EMF biological research funded through the Department of Energy. To oversee policy and general direction of this research, a National EMF Advisory Committee was assembled. Both the EPA and the National Institute for Occupational Safety and Health now maintain EMF hotlines, yet NIEHS has taken the position that the NIEHS has the sole responsibility for declaring whether a hazard exists and the magnitude of that hazard. Federal regulations are not anticipated in the near future, but some states have developed and other states are in the process of developing pertinent ambient field levels at ROW boundaries.

A careful review of the biological and physical studies of 60-Hz EMFs has failed at this time to uncover consistent evidence linking harmful effects with field exposures. EMF fields are unlike other agents that have a toxic effect (e.g., toxic chemicals and ionizing radiation) in that dramatic acute effects cannot be forced and longer-term effects, if real, are subtle. Nonetheless, a wide range of biological responses have been reported to be affected by EMF fields.

Even if clear adverse effects were apparent in the epidemiology literature or with some biological assay, considerable additional work would be required to determine how and what to mitigate, because evidence suggests that some EMF bioeffects do not follow the typical "more intensity is worse" relationship. Furthermore, there may be a subtle relationship between the intensity of the local geomagnetic field and the appearance of effects for some intensities of 60

-Hz fields. This complicating evidence points to the fact that, while much experimental and epidemiological evidence has been accrued, the pieces still do not fit together very well.

Because of inconclusive scientific evidence, the chronic effects of EMF could not be categorized as either a Category 1 or 2 issue. NRC will continue to monitor the research initiatives, those within the national EMF program and others internationally, to evaluate the potential carcinogenicity of EMF fields as well as other progress in the EMF study disciplines. If NRC finds that a consensus has been reached by appropriate federal health agencies that there are adverse health effects, all license renewal applicants will have to address the health effects in the license renewal process.

4.5.5 Surface Water Quality and Aquatic Ecology

A basic concern with right-of-way and service road maintenance is the effect that such maintenance activities may have on the health of nearby aquatic ecosystems. The effects are considered of small significance if there is no measurable change in species diversity, abundance or health within the aquatic ecosystem. An effect of moderate significance is defined as one resulting in reduced abundance or health of one or several species that may eventually lead to the demise of the species. An effect of large significance is defined as one resulting in the loss of any species on which a high recreational or commercial value is placed or the collapse of the existing ecosystem.

Potential effects of transmission lines on aquatic resources would arise mainly from water quality impacts associated with maintaining power line ROW and service roads. Where roads cross or border on surface waters, soil erosion could cause elevated turbidity and sedimentation. Appropriate control techniques (e.g., grassed or wooded buffer strips between the road and the body of water) will minimize impacts. Because ROW are normally maintained by mowing or selective application of herbicides (Section 4.5.1.4), soil erosion from power line corridors should not normally be a problem. Potential toxic effects of herbicides that are applied to power line ROW and subsequently transported to surface waters should be considered in the maintenance program. By using herbicides approved for ROW use in accordance with FIFRA, significant adverse effects of herbicides are avoided. Mowing and other activities needed to maintain transmission line corridors are readily controllable to minimize impacts to aquatic resources. These activities are not expected to change during the license renewal term.

Changes in any affected aquatic ecosystem due to construction and maintenance practices will have taken place long before consideration of license renewal. Ongoing management practices with respect to controlling soil erosion and the proper application of herbicides will continue over the term of a renewed license. The aquatic ecosystem is expected to be unaffected by license renewal with no measurable change in species diversity, abundance or health. The effect of transmission lines on surface water quality and aquatic ecology is then of small significance. The continued use of proper management practices with respect to soil erosion and application of herbicides is expected. Impacts of any transmission lines on aquatic ecosystems over a larger geographic area or over time will be stable and not cumulative. The effect of transmission line right-of-way maintenance on surface water quality and aquatic ecology is a Category 1 issue.

4.5.6 Terrestrial Ecology

This section evaluates the impacts of ROW management on wildlife (Section 4.5.6.1); the impacts of bird collisions with transmission lines (Section 4.5.6.2); and the impacts of EMFs on plants, wildlife, and livestock (Section 4.5.6.3).

4.5.6.1 Impacts of ROW Management on Wildlife

The extent to which wildlife populations are affected by vegetation control on transmission line ROW is the issue evaluated by this section. The effects of ROW management in the transmission corridor during the license renewal term are considered of small significance if habitat diversity remains the same as that of the surrounding area, or is increased, while species population declines (if any) in the surrounding habitat are small. The significance of the impact is evaluated by a review of the voluminous published literature on this topic. Numerous scientific papers published mainly during the late 1970s and the 1980s were reviewed for this analysis. Data are not available for lines associated specifically with nuclear plants, but the literature applies to such lines because the same methods for ROW

management are used for transmission lines associated with any type of generating facility. This issue was addressed by NRC environmental impact statements for the construction permit stage and the operating license stage.

Most data on the impacts of power line corridors on wildlife are for relatively moist areas of the United States where vegetation growth is rapid and vegetation must be controlled to prevent its interference with the transmission lines. In arid regions, little or no vegetation control is required, and the potential effects on wildlife are small. Potential effects are also small where lines cross croplands, because no vegetation management is required. The following discussion is therefore applicable primarily to forested regions where the utility must conduct vegetation control on transmission line ROW.

Broadcast spraying of herbicides and mowing of the entire corridor have greater periodic impacts on wildlife than do selective cutting or selective application of herbicides. Mowing reduces the vegetation on the ROW to a low stubble, and the remaining vegetation or the regrowth the first year after cutting provides little food or cover for wildlife. As a result of the reduced vegetation, populations of the primary species of birds that nest on a transmission line ROW have been shown to be reduced. Mammal populations may also be reduced, although few data have been collected to show such an impact. Resprouting and regrowth of vegetation on the ROW is usually rapid after cutting. If the vegetation is cut only once every 4 years rather than annually, it usually develops into a dense mixed growth of shrubs, shrub patches, saplings, forbs, and grasses. Bird populations increase along with the vegetation until the next mowing, when the cycle begins again (de Waal Malefyt 1984; Everett et al. 1981; Kroodsma 1982).

Broadcast spraying of herbicides is also done on a periodic basis and causes a cyclic effect on wildlife. However, spraying often kills entire plants, and resprouting is less common. Therefore, after a number of spraying cycles, some plant species are greatly reduced in abundance on the ROW. The resulting plant community consists of herbicide-resistant species and is often not very diverse. Grasses, ferns, and relatively few species of shrubs are usually the dominant vegetation. Correspondingly, the wildlife community has relatively few species and low population densities, and bird-nesting success in grass and forb areas on ROW has been observed to be low. Therefore, from the wildlife perspective, broadcast spraying is usually considered the least desirable vegetation maintenance technique. Annual mowing could have an effect similar to broadcast spraying but is seldom if ever used as a routine management technique for transmission line ROW (Cavanagh et al. 1976; Chasko and Gates 1981, 1982; de Waal Malefyt 1984; Hartley et al. 1984). Broadcast spraying of herbicides on some ROW that currently is mowed may become necessary if woody vegetation becomes too dense, as in ROW through mesophytic forests where forest regeneration is rapid (Luken et al. 1991).

Selective cutting or spraying of vegetation has less impact on wildlife because low-growing shrubs and other vegetation are left undisturbed and provide good wildlife habitat. Selective techniques are labor-intensive and thus may be more expensive than broadcast spraying or mowing. A primary goal of these selective techniques is to eliminate undesirable plant species from the ROW while keeping those that provide good wildlife habitat and that will not interfere with the power lines. Cutting and spraying are often combined because cut stems must often be sprayed to prevent resprouting and thus eliminate the plant. As the desirable plant species begin to dominate the ROW, they gain a competitive advantage and help to prevent the reestablishment of undesirable plants; thus, the long-term vegetation maintenance costs may be reduced (FWS/OBS-79/22, Luken et al. 1994).

Herbicides are generally not highly toxic to wildlife when they are properly applied for ROW management. Therefore, toxic effects of herbicides on wildlife are generally of little concern to wildlife biologists or wildlife managers. Of the many papers reviewed for this analysis, none expressed serious concern for toxic effects.[2] Rather, herbicide effects on wildlife have been shown to result from the vegetation changes that occurred as a result of herbicide application.[3] Changes in vegetation on an ROW or in any other habitat always cause changes in the wildlife community, whether the vegetation is cut or modified by herbicides. As in the case of cutting, herbicide effects on vegetation are usually beneficial to some wildlife species and detrimental to others. The literature referenced above shows that, as long as a diverse plant community remains on herbicide-treated ROW, a diverse wildlife community will also be present.

The maintenance of ROW vegetation as a low-growing plant community results in an ROW wildlife community that is characteristic of such vegetation. This wildlife community has some species of small mammals and birds that are not present in the natural plant communities bounding the ROW. Therefore, the presence of the ROW vegetation adds to the number of wildlife species found in the area. In addition, the ROW provides food and cover for many species of animals that were already present before line construction.[4] Forest edge along the ROW as well as along other open areas may provide some benefit to wildlife, but benefits of such an edge appear to have been overrated (Chasko and Gates 1982; Kroodsma 1984a, 1984b, 1987; Reese and Ratti 1988; Small and Hunter 1989).

The presence of the transmission line and its cleared corridor is apparently not a great disturbance to any wildlife species. Based on all of the literature reviewed, no wildlife species is known to have disappeared from habitats adjoining the corridors after line construction. Some species, however, are less abundant in the forest near the corridor than in the deeper forest, indicating avoidance of the transmission lines and/or the corridor (Kroodsma 1984b, 1984c). Because these species also appear to avoid other types of clearings (e.g., croplands or pasture), the openness of the corridor appears to be the feature being avoided, not the line itself. Predation on eggs and nestlings of forest birds has been observed to be greater near the forest/corridor edge than in the deeper forest and may be one factor responsible for some species appearing to avoid or to be less dense near the corridor (Chasko and Gates 1981, 1982).

The overall effect on wildlife of a transmission line corridor located within a forest appears to be an increase in the number of species present in the total corridor and forest area, while some populations of forest species are slightly lower as a result of the corresponding decrease in amount of forest habitat. Some bird and mammal species that inhabit grassy or brushy habitats are added to the area and are responsible for the increase in the number of species. At the same time, all other forest species remain in the area, and some find improved cover or food resources in the ROW. Population declines in forest species are usually small because the ROW is narrow and occupies only a small fraction of a forested area.

A current concern among ornithologists is the high degree to which forested habitats are being fragmented into smaller and smaller areas as a result of clearing for agriculture and urbanization. This fragmentation appears to be at least partly responsible for significant declines in the populations of many migrant bird species (Small and Hunter 1988; Yahner and Scott 1988). Transmission line corridors, probably because of their narrowness, have not been noted as a significant factor in forest fragmentation impacts on birds.

Where corridors cross particularly important wildlife habitats, impacts may be of greater concern. Impacts on winter habitats of certain big game animals were a particular concern. However, impact studies done for deer wintering yards in the northeastern United States and southeastern Canada (Jackson 1980; Willey and Marion 1980; Doucet et al., 1983, 1987), deer in winter habitats in the Northwest (Loft and Menke 1984), and elk winter habitats in the West (Nelson 1986) showed no significant impact.

Although animal population density is cyclic in response to vegetation changes in ROW, over the long term (i.e., over many cycles) the populations appear relatively stable, with no species being significantly affected. The overall impact of transmission line corridors, based on an extensive literature, appears to be neither significantly adverse nor significantly beneficial. The consensus among wildlife biologists appears to be that cleared transmission line corridors and their maintenance do not have significant adverse impacts and that corridors provide valuable wildlife habitats if properly managed. Of the papers reviewed for this GEIS, none was found that identified any impact of transmission line corridors on wildlife that was of great concern to the authors. The evidence supports a conclusion that continued ROW management during the license renewal term will not lower habitat diversity or cause significant changes in species populations in the surrounding habitat. Thus the impacts are of small significance. The only potential mitigation measure would be relocation of the transmission lines to less sensitive areas, but this would not be warranted due to the small benefit and high capital cost of such actions. No mitigation measures beyond those implemented during the current term license would be warranted and little potential for cumulative impacts is indicated. This is a Category 1 issue.

4.5.6.2 Avian Mortality Resulting from Collisions With Transmission Lines

Numerous studies have been published of avian mortality resulting from collisions with transmission lines and other man-made objects. The issue is whether collision mortality is large enough to cause long-term reductions in bird populations. The analysis of this issue is based on published literature addressing bird collisions with all types of man-made objects and applies to all transmission lines regardless of the type of generating facility. Monitoring data collected at one nuclear plant, Prairie Island, are also summarized.

Avian mortality resulting from collisions with transmission lines is of concern if stability of local populations of any bird species is threatened or if the reduction in the numbers within any bird population significantly impairs its function within the ecosystem. Avian mortality resulting from collisions of birds with transmission lines is considered to be of small significance if there is no threat to the stability of local populations of any species and if there is no noticeable impairment of its functioning within the local ecosystem.

Many millions of birds die each year from natural causes, and millions are killed each year in the United States as a result of colliding with windows of houses and other buildings, radio and TV towers, vehicles, transmission and distribution lines, telephone lines, cooling towers, smokestacks, and many other man-made objects. Numerous papers have reported the more noticeable, sometimes spectacular, kills that have occurred at radio and TV towers and at transmission lines located near lakes or wetlands where birds are concentrated.[5] Large bird kills at radio and TV towers occur at night during spring and fall bird migration and involve primarily passerine birds (songbirds) that appear to be confused by tower lights (Crawford 1981; Larkin 1988; Maehr et al. 1983; Taylor and Kershner 1986). These lights, during conditions of low clouds or fog, create a surrounding area of diffuse light that flying birds are reluctant to leave, with the result that the birds fly in circles around the towers. Thus, these birds run a high risk of colliding with the towers' guy wires. In contrast, kills along transmission lines involve a greater fraction of heavier, less agile birds such as waterfowl and cranes. Inclement weather is often a contributing factor in transmission line kills; lights are not a contributing factor, because they generally are not used to mark transmission lines.

It is unknown to what extent avian populations decline as a result of collision mortality of all types or mortality associated specifically with transmission lines. Several authors have concluded that the mortality caused by transmission lines in their studies did not cause a significant reduction in the bird populations located in their study areas. However, some of these authors expressed concern for cumulative impacts (Beaulaurier et al. 1984; Faanes 1987; Meyer and Lee 1981). Cumulative impacts would accrue as migratory birds such as waterfowl migrate to different areas and are exposed to additional lines, whereupon more collisions occur and total mortality continues to increase.

A few authors have also pointed out that bird mortality along the many thousands of miles of transmission and communication lines in the United States is probably of greater significance than the more noticeable kills in certain transmission line locations where birds are concentrated (Avery 1981; Willard and Willard 1978). The amount of bird mortality in nonwetland areas or in areas of average bird numbers has received little study because the individual bird kills are spread out over long distances and are hard to find. Therefore, accurate estimates of the total bird mortality caused by transmission lines do not exist, and the significance of transmission line collision mortality with regard to long-term population effects cannot be accurately assessed.

Overall, relatively little concern about bird collision mortality has been expressed in the literature. Generally, collision mortality has appeared to be only a small fraction of total mortality and therefore has not been considered to have significant population impacts. Banks (1979) estimated that human activity and bird collisions with man-made structures resulted in the deaths of about 196 million birds per year or 1.9 percent of the total bird mortality (about 10 billion per year) in the continental United States. About 63 million of the estimated 10 billion annual bird deaths (i.e., 0.63 percent) resulted from collision with all types of man-made structures. The transmission line impact would be a fraction of this estimate. Stout and Cornwell (1976) reported on waterfowl mortality. They estimated that about 0.07 percent of the nonhunting waterfowl mortality resulted from collisions with lines, including transmission, distribution, and telephone lines. These estimates, which are essentially all that is available in the literature, suggest that

transmission lines do not pose a serious threat to avian populations. Banks (1979) states that most of the human-related mortality is accounted for by relatively few species and that these species maintain large, harvestable populations. This, as Banks pointed out, suggests that human activities do not significantly affect most bird species. Banks concluded that "activities of man that do not necessarily result in the death of birds but rather reduce reproductive potential, such as habitat alteration and environmental contamination, are much more likely to have long-term effects on avian populations."

More recent literature on bird collision mortality has not raised strong concerns that the Banks (1979) and Stout and Cornwell (1976) estimates are too low. However, Avery (1981) pointed out that collision mortality may be significantly higher than Banks' estimate of 63 million. He states that the primary source of collision mortality appears to involve the millions of miles of transmission and communication lines and the billions of glass windows throughout the country. He cites collision mortality estimates higher than Banks' estimates (e.g., 80 million bird deaths annually from collision with windows), but a lack of information prevented him from estimating mortality resulting from collisions with transmission lines. No study reviewed for this GEIS has suggested that collision mortality is a significant factor in reducing the populations of common bird species.

Several reports have suggested that rare species sometimes could be significantly affected by transmission and communication lines, particularly if the lines passed through an area where such species were concentrated (Faanes 1987; ORAU-142, 1978c; Meyer and Lee 1981; Willard and Willard 1978). For example, A. J. Crivelli et al. (1988) surveyed Dalmatian pelican mortality resulting from collision with a line through a pelican wintering area. They concluded that this mortality would result in a 1.3 to 3.5 percent reduction in the number of pelican breeding pairs in Greece and Bulgaria. Whooping cranes, an endangered species in the United States, have collided with power lines on at least 10 occasions according to Faanes (1987). The principal known cause of death for wild fledged whooping cranes is collision with power lines (Morkill and Anderson 1991). Several papers reviewed by Kroodsma (ORAU-142, 1978b) reported that 10 percent of the known mortality of bald eagles from 1960 to 1972 apparently resulted from collisions with some object, frequently a transmission line. Willard and Willard (1978) reported that 4 out of 200 nesting female white pelicans in a small Oregon population died from collisions with transmission lines and considered this mortality to be a significant impact on a small, threatened population.

Several studies have reported on relatively large collision kills where transmission lines crossed wetland areas being used by large concentrations of birds (Anderson 1978; Beaulaurier et al. 1984; Faanes 1987; ORAU-142, 1978c; Malcolm 1982; Meyer and Lee 1981; Rusz et al. 1986). Although the authors were concerned about the mortality, most of them reported that the data indicated the mortality was a small fraction of the number of birds present and that the local bird population was not significantly affected. The case reported by Malcolm (1982) appears to involve the greatest collision mortality.

Two additional studies reported collision-caused deaths of sandhill and whooping cranes, two species that appear particularly susceptible to collision with transmission lines. In the San Luis Valley, Colorado, 78 sandhill cranes and 3 whooping cranes collided with lines during the fall and spring in 1983 and 1984, as reported by W. M. Brown et al. (1985). Whooping cranes were the most frequent casualty in proportion to their abundance (13 to 29 birds observed at various times). These authors also reported that at least eight other whooping cranes in the Rocky Mountain population struck transmission lines from 1977 to 1985. In Idaho, in an area where nine pairs of sandhill cranes were observed nesting, three sandhill cranes and one whooping crane collided with lines during the first year after line construction (Howard et al. 1985).

Sandhill crane mortality in general from 1978 through 1985 was reviewed by Windingstad (1988). Known mortality was as follows: toxins (e.g., from moldy corn and waste peanuts)-- approximately 5550 cranes; hail storm (1 occurrence)--600; avian botulism--150; avian cholera-- 125; lightning (1 occurrence)--90; collision with transmission lines--5 occurrences reported, the worst resulting in 51 carcasses at a line crossing the Platte River near a crane roost site (numbers in the other four occurrences were not reported); unknown cause--8; lead poisoning--4, avian tuberculosis

--1; and predators--1. Despite this extensive mortality in sandhill cranes, their midcontinent population has increased dramatically during the past few decades.

Modification of existing transmission lines has been investigated to reduce collision mortality in localities where relatively large kills occur. The most promising modifications include removal of the ground wires in the most critical locations or placing markers on the ground wires to make them more visible to birds. Such markers include black-and-white ribbons, orange aviation marker balls, plastic spirals, and spiral vibration dampers (Alonso et al. 1994; Brown et al. 1985; Faanes 1987; Morkill and Anderson 1991; ORAU-142, 1978d). For example, Alonso et al. found that colored PVC spirals installed on groundwires reduced bird collisions by 60 percent, and Morkill and Anderson found that yellow aviation balls installed on groundwires reduced sandhill crane collisions by 56 percent.

No relatively high collision mortality is known to occur along transmission lines associated with nuclear power plants in the United States other than the Prairie Island plant in Minnesota. This plant is located on the Mississippi River southeast of Minneapolis and may be the only nuclear plant where surveys were done to find birds that collided with off-site lines. The plant's 1978 annual report presented a 5-year study of bird collisions with transmission lines near the river. Counts were conducted by walking several transects, usually on a weekly basis from April 22 through May 27 from 1974 through 1978. A total of 453 birds were found over the entire 5-year period of observation, primarily passerines (songbirds), mourning doves, ring-necked pheasants, and American coots. Waterbirds included 11 sora rails, 8 wood ducks, 3 mallards, 2 black ducks, 1 great blue heron, 1 ruddy duck, and 1 hooded merganser. No raptors were found. Most collisions apparently occurred during inclement weather. Scavengers probably removed many bird carcasses before they could be found.

Available literature on transmission line collision mortality is insufficient to determine conclusively whether bird populations are being significantly affected. Rather, existing data suggest that transmission lines associated with nuclear plants are probably responsible for only a small fraction of total collision mortality for transmission and distribution lines in general. Also, existing literature suggests that total collision mortality (cumulative impacts) associated with all types of man-made objects is not reducing bird populations significantly.

Based on (1) the fact that existing literature does not show significant impacts of collision mortality on overall species populations and (2) the lack of known instances where nuclear-plant lines are affecting large numbers of individuals in local areas, the staff concludes that the mortality resulting from bird collisions with transmission lines associated with license renewal and an additional 20 years of operation will not cause long-term reduction in bird populations and thus will be of small significance. Further, little potential for significance due to cumulative impacts is indicated. Finally, the modification of transmission lines would not be warranted because the impact is so small and such mitigation measures would be costly. This is a Category 1 issue.

4.5.6.3 Impacts of Electromagnetic Fields on Flora and Fauna

The effects of electromagnetic fields on terrestrial biota are considered to be of small significance if the overall health, productivity and reproduction of individual species appears unaffected.

The EMFs produced by operating transmission lines up to 1100 kV have not been reported to have any biologically or economically significant impact on plants, wildlife, agricultural crops, or livestock (DOE/BP-945; Miller 1983). Areas under and in the vicinity of the lines have been studied numerous times. Vegetation, foliar damage due to EMF-induced corona at leaf margins, agricultural crop production, wildlife population abundance, livestock production, and potential livestock avoidance of the lines have been investigated. Also, many laboratory experiments with plants and laboratory animals have been conducted, often using electric fields much stronger than those occurring under transmission lines.

4.5.6.3.1 Plants

Studies have shown that minor damage to plant foliage and buds can occur in the vicinity of strong electric fields. For example, tree foliage and buds that are close to transmission lines can be damaged and upward or outward growth of

branches can be reduced. Damage typically occurs only to the tips and margins of leaves in the uppermost plant parts that are the closest to the lines. The damage in the form of a leaf burn is most prevalent on small pointed leaves and is similar to leaf damage that might occur as a result of drought or other environmental stresses. The damage generally does not interfere with overall plant growth (Miller 1983).

The damage is thought to result from heating caused by induced corona at the leaf tips and margins. The electric field is greatly focused by leaf points or marginal teeth, thus increasing its strength to the point that corona (Section 4.5.1.3) occurs. Night-vision instruments have shown this corona as a glow of light concentrated at leaf tips and margins. The damage apparently does not extend to lower levels of the plant because the electric field weakens with distance from the lines and because the upper plant parts shield the lower parts from the electric field.

In one experiment under an 1100-kV prototype line, the upward growth of alder and Douglas fir trees was reduced by this damage, with the result that the crowns of the trees became somewhat flattened on top and the overall crown developed a broader appearance than usual (Rogers et al. 1984). The growth of the lower parts of the trees and of lower -growing plants such as pasture grass, barley, and peas appeared unaffected (Rogers and Hinds 1983). In another experiment, 50-kV/m fields had no apparent effect on corn germination or the growth of corn seedlings; and the growth of corn, bluegrass, and alfalfa apparently was not affected by fields of 25-50 kV even though minor damage occurred to the outer fringes of the uppermost leaves (Bankoske et al. 1976). Germination of sunflower seeds in a 5-kV/m electric field was reduced by about 5 percent in some cases [4 out of 11 replicates (Marino et al. 1983)]. An experiment with several species of agricultural plants found that a maximum of about 1 percent of the total plant tissue was damaged by exposing the plants to 50-kV/m fields (Poznaniak and Reed 1978).

Lee (DOE/BP-945) reviewed several papers reporting studies in Indiana, Tennessee, and Arkansas. The productivity of corn and other crop plants was not affected by electric fields of 12 to 16 kV/m under a 765-kV line and a UHV test line in Indiana, although plants under the larger line suffered some leaf tip damage from induced corona. Corn production in Tennessee may have been reduced by electric fields up to 8.5 kV/m, but the authors indicated the results were inconclusive. An Arkansas study found normal yields of rice and soybeans but a 15 percent reduced yield of cotton beneath a 500-kV line (see Section 4.5.3). The researchers could not determine whether the reduced cotton yield resulted from electric field or ineffective aerial application of agricultural chemicals beneath the line.

4.5.6.3.2 Honeybees

Several studies have shown that honeybees in hives under transmission lines are affected by EMF (EA-4218; Rogers and Hinds 1983; Warren et al. 1981). Adverse effects include increased propolis (a reddish resinous cement) production, reduced growth, greater irritability, and increased mortality. These effects can be greatly reduced by shielding the hives with a grounded metal screen or by moving the hives away from the lines (Rogers and Hinds 1983; Lee 1980). V. P. Bindokas et al. (1988) showed that these impacts were not caused by direct effects of the electric fields on the bees but by voltage buildup and electric currents within the hives and the resultant shocks to bees. Bees kept in moisture-free nonconductive conditions were not adversely affected, even in electric fields as strong as 100 kV/m.

4.5.6.3.3 Wildlife and Livestock

Chronic exposure to EMF is experienced by small birds and mammals that primarily inhabit ROW corridors and by birds (primarily raptors) that nest in transmission line towers. EMF exposures to larger animals and livestock are usually relatively brief because these animals inhabit relatively large areas instead of small areas beneath the lines. Exposures occur as these larger animals pass beneath the lines or as birds fly by the lines.

The voluminous literature on population studies of small bird and mammal species in transmission line corridors (Section 4.5.6.1) has expressed virtually no concern for possible impacts of EMF. These species apparently thrive underneath the lines, where their abundance appears to depend on habitat quality rather than on the strength of the electric fields to which they are exposed or the size of the line. For example, the density of breeding birds under 500-

kV lines in eastern Tennessee is greater than that in adjacent forests (Kroodsma 1984c, 1987) and appears to be greater than bird density in most grassland habitats or agricultural fields. Also, the density of small mammal populations near these lines appears to depend on habitat type rather than on the presence of the lines (Schreiber et al. 1976). A Minnesota study of a 500-kV line found little evidence of either a positive or negative effect of the power line on bird populations (Niemi and Hanowski 1984). Bird and small mammal populations under an 1100-kV line in Oregon were also apparently unaffected by line operations (Rogers and Hinds 1983). Habitat use by elk in western Montana was apparently unaffected by operation of a 500-kV line, as the elk used habitats along the power line in proportion to their availability (DOE/BP-1136).

Raptors, ravens, and some water bird species frequently nest and perch on transmission line towers, particularly in grassland areas where other suitable nest sites are lacking.[6] Thus, the birds are able to use habitats without suitable nest sites--habitats that they otherwise would not have used (Gilmer and Stewart 1983; Williams and Colson 1989). On high -voltage lines supported by metal lattice towers, the birds usually nest on the top (bridge) of the tower where the strength of the electric field is minimal (e.g., 5 kV/m or less) (Lee 1980). Lee found 80 percent of 110 nests on towers to be located on the tower bridge and cited previous studies that showed similar results.

The success of these tower nests in producing young appears to be no different from nests located in areas not exposed to EMF. In central North Dakota, 113 ferruginous hawk nests in high-voltage transmission line towers (18 percent of a total of 628 nests found) had a higher success rate (87 percent) than nests in other locations (however, a hail storm that missed the lines reduced the success of some other nests). The number of fledglings per occupied nest was 2.8 for ground nests (which were larger than tower or tree nests), 2.6 for tower nests, 2.3 for haystack nests, and 2.0 for tree nests (Gilmer and Stewart 1983). In Idaho, Steenhof et al. (1993) studied nesting success of ravens and raptors on a 576 -km (370-mile) segment of 500-kV transmission line constructed in 1981. From 1981 through 1989 (the last year reported by Steenhof et al.), the numbers of these species nesting on transmission towers increased to 133 pairs, including roughly 64 percent common ravens, 21 percent red-tailed hawks, 9 percent ferruginous hawks, 6 percent golden eagles, and 0.3 percent great horned owls. Nesting success of these birds averaged 65 percent to 86 percent and was similar to or better than that of the same species nesting on other substrates. Lee (1980) reported finding 110 hawk and raven nests on 260 miles of 230-kV and 500-kV lines of the Bonneville Power Administration. Although the success of these nests was not monitored, the author reported that, based on a literature review, it was unlikely that nesting would be adversely affected by EMF found in most locations in transmission line towers.

Livestock in both field and laboratory studies have shown no significant impacts when exposed to EMF. In DOE/BP-945, J. M. Lee reviewed about 10 reports on effects of transmission lines on livestock in the United States and Sweden. These studies found no evidence that the growth, production, or behavior of beef and dairy cattle, sheep, hogs, or horses were affected by EMF. The studies involved 11 farms along a 765-kV line in Indiana, 55 dairy farms near 765-kV lines in Ohio, 36 herds of cattle near 400-kV lines in Sweden, a mail survey of 106 farms in Sweden, a study of fertility of 58 cows under a 400-kV line in Sweden compared with 58 in a control area, 30 swine raised beneath a 345-kV line in Iowa compared with 30 raised in a control area, and cattle behavior under an 1100-kV prototype line in Oregon. Cattle under the 1100-kV test line in Oregon were startled by the first occurrence of corona noise when the line was reenergized after a shutdown period (Rogers and Hinds 1983). From 1977 through 1981, grazing of cattle in pasture under the line appeared to be unaffected by line operation. In 1980-81, the cattle spent more time near the line during periods when it was deenergized than when it was operating, but spent an increasing amount of time under the line when it was operating as the growing season progressed (Rogers and Hind 1983).

In the Indiana study (Amstutz and Miller 1980), performance of livestock frequently under a 765-kV line on 11 farms was studied during a 2-year period (1977-1979; 9 farms participated for the full 2 years). Animals included 10 horses, 55 sheep, 149 beef cattle, 337 hogs, and 429 dairy cattle. Maximum field voltage levels recorded near ground level were about 9.1 kV/m. General health, behavior, and performance of the animals were not affected by the transmission line EMF.

In the Swedish study of cow fertility, 58 heifers were exposed to a 400-kV, 50-Hz transmission line from June to mid-October 1985 (Algers and Hultgren 1987). The length of exposure was 15 to 20 times longer than the average exposure

per year for Swedish dairy herds exposed to 400-kV lines. No effects were observed on the frequency of malformations, the length or variation of the estrous cycle, the midcycle plasma progesterone level, the intensity of estrus, the number of inseminations per pregnancy, the overall conception rate, or the fetal viability. Previous studies of cattle showed no significant effects of EMF on reproduction.

4.5.6.3.4 Conclusion

No significant impacts of EMF on terrestrial biota have been identified. Although foliage very close to lines can be damaged, the overall productivity and reproduction of native and agricultural plants appear unaffected. Also, no evidence suggests significant impacts on individual animals or wildlife populations that are chronically exposed to EMF under transmission lines or in the towers. Livestock behavior and production also appear unaffected by line operation. Therefore, the potential impact of EMF on terrestrial biota is expected to be of small significance for all plants. The only potential mitigation would be to exclude plants and animals from the right of way, a measure with very severe impacts of its own. However, because the impact is of small significance and because mitigation measures could create additional environmental impacts and would be costly, no mitigation measures beyond those implemented during the current term license would be warranted. This is a Category 1 issue.

4.5.7 Floodplains and Wetlands

Transmission lines pass through floodplains and wetlands in many areas. This section evaluates the impacts on floodplains and wetlands that may result from periodic cutting or herbicide treatment of woody vegetation and the occasional use of heavy equipment for line repair. The analysis in this section is based on a literature review and applies to all power lines regardless of the type of generating facility.

Vegetation control is normally required only in forested areas where trees could grow tall enough to interfere with line operation. Marshes, ponds, or other types of wetlands lacking trees generally should not be subjected to vegetation control and thus should not be affected. In forested wetlands, most of which are on floodplains, vegetation may be cut by hand or with a tractor with a rotary blade or may be controlled by herbicides (Section 4.5.1.4). Impacts are generally restricted to the ROW and should have no significant impact on the functions and values that have been identified for floodplains, including storage and slow release of floodwaters, water quality maintenance, groundwater recharge, and support of wildlife populations (Greeson et al. 1979). Herbicides that are often used in prairie wetlands to improve habitat for waterfowl do not appear to have toxic effects on aquatic biota (Solberg and Higgins 1993).

Repair of transmission lines may require access by heavy equipment to tower sites in floodplains or wetlands. This access would damage vegetation and disturb wildlife, having the same types of impacts that occurred during construction of the line. Overall impacts are expected to be relatively minor because (1) line repairs at any one location are rarely required, (2) impacts would be temporary and restricted to relatively small areas, and (3) tower sites often avoid wetlands. Repairs made during winter would generally have less impact than repairs in summer, but often there may be no choice of season because of the necessity for immediate repair.

Studies in Massachusetts indicate that transmission lines and their ROW can be constructed and maintained through wetlands without significant impact (Nickerson and Dobberteen 1987; Thibodeau and Nickerson 1986). The studies were conducted in several areas where 345-kV lines were constructed through cattail marsh, wooded swamp, and shrub swamp/bog. Preconstruction studies were done in 1975 and 1976, and postconstruction studies were done from 1977 to 1982 and again in 1987. The cattail marsh was affected by the placement of heavy oak mats that were required so that heavy construction equipment could enter the marsh. This was done during the winter when the marsh was frozen and aerial parts of plants were dead. The marsh recovered to its original condition in 1 year. Line maintenance or repair using heavy equipment, if required, could be conducted during winter with no greater harm to a marsh.

In a bog, although vegetation was damaged by placement of oak mats and had not fully recovered after 10 years, the number of plant species in affected areas did not differ significantly from that in control areas. The authors recommended that line construction avoid bogs because of their extremely slow recovery.

Wooded swamp dominated by red maple showed significant change in vegetation structure because trees had to be removed from the ROW. After construction, the number of species and individuals returned to normal after 1 year, and a shrub layer became the dominant vegetation. After 10 years, the number of plant species in the ROW was greater than that in undisturbed swamp, even though the ROW vegetation had been mowed once (at a level of 3 ft) 6 years after construction. Because of the rapidity of swamp recovery after construction and the stability of the maintained ROW vegetation, the authors concluded that there was no substantial negative impact on wetland functioning. On swamp ROW cleared for lines from 1936 through 1939, selective cutting and herbicide treatment of cut stumps had been conducted. The numbers of species and individuals were similar to those in adjacent forest, and the ROW showed little evidence of disturbance except where trees had recently been cut (Nickerson and Dobberteen 1987; Thibodeau and Nickerson 1986).

No transmission line associated with a nuclear plant has been identified as being a significant impact on the functions and values of a wetland or floodplain. Only minor impacts of small significance are expected from ROW maintenance or line repair. Because the impact is of small significance and mitigation measures would be costly to implement, none of the mitigation measures identified above (i.e., placement of oak mats in affected areas and avoidance of maintenance during the growing season) would be warranted. This is a Category 1 issue.

4.5.8 Aesthetic Resources

This section evaluates the issue of transmission-line-induced impacts of continued operation of nuclear power plants on historic and aesthetic resources. Transmission lines are probably the most frequently seen equipment associated with power plants, particularly plants such as D. C. Cook or Diablo Canyon that are well hidden from public view. Transmission lines are the least novel in appearance when compared with highly visible nuclear power plant components such as cooling towers and containment vessels. Therefore, they are perceived with less bias than other components of the nuclear power plant complex. People may not even realize that some transmission lines are associated with a particular power plant, especially a nuclear plant.

The definitions of insignificant, noticeable, and significant levels of impact are the same as those described in Section 3.7.8.

The evaluation of past and projected future impacts of transmission lines on aesthetic resources involved staff examination of the experience at the seven selected case study sites, a brief survey of the projected and realized aesthetic impacts at the other operating nuclear power plants, a survey of the professional literature, and a search of recent newspaper and magazine accounts related to these issues.

Nuclear power plants are frequently sited near bodies of water for access to cooling water; their associated transmission lines often intrude into recreation, historic, or scenic areas. Most of the adverse impacts to date from transmission lines center on such incompatibility. Notable examples include Brunswick, Diablo Canyon, Millstone, Nine Mile Point, St. Lucie, and Vogtle. Crossings of major rivers, wetlands, wildlife areas, roads, lakes, cemeteries, and battlefields are the source of the disputes that have arisen. Various design, engineering, siting, construction, and metallic surface treatments have been made available to mitigate these conflicts.

In general, during the license renewal term, continued use of transmission lines and ROW is projected to cause little or no additional impacts beyond those that have already occurred. Some habituation to lines is likely to occur or continue. The problem of erosion of access roads under transmission lines at Diablo Canyon represents a type of impact that could worsen over time if mitigation is not effectively implemented. Proper maintenance of the t ransmission line corridor will help prevent aesthetic degradation. Additional mitigation measures such as replacement of towers or burying the transmission line would be excessively costly and would have additional environmental impacts.

The aesthetic impacts associated with continued operation of transmission lines are of small significance for all plants, and no mitigation measures beyond those implemented during the current term license would be warranted. This is a Category 1 issue.

4.6 Radiological Impacts of Normal Operation

This section provides an evaluation of the radiological impacts on occupational personnel and members of the public during normal operation following license renewal. This evaluation extends to all 118 nuclear power reactors. Radiation exposures occurring after license renewal are projected based on present levels of exposures. Estimates of additional maintenance, testing, and inspections as a result of a variety of age-related changes in operational procedures were made based on the anticipated changes to current operation and are detailed in Section 2.6 and Appendix B. Added maintenance, testing, and inspection will be accompanied by increased exposure time to members of the work force but are not expected to significantly influence dose to members of the public. Regulatory requirements under which nuclear reactors presently operate are discussed in Section 3.8.1.1.

A detailed discussion is provided in Chapter 6 of the radiological impacts of low-level waste, mixed waste, and spent fuel generated by power reactors during the renewal period; the impacts attributable to the uranium fuel cycle; and the impacts of the transportation of fuel and waste.

In response to comments on the draft GEIS and the proposed rule, the standard defining a small radiological impact has changed from a comparison with background radiation to sustained compliance with the dose and release limits applicable to the activities being reviewed. This change is appropriate and strengthens the criterion used to define a small environmental impact for the reasons that follow. The Atomic Energy Act requires NRC to promulgate, inspect, and enforce standards that provide an adequate level of protection of the public health and safety and the environment. These responsibilities, singly and in the aggregate, provide a margin of safety. The definitions of the significance level of an environmental impact (small, moderate, or large) applied to most other issues addressed in this GEIS are based on an ecological model that is concerned with species preservation, ecological health, and the condition of the attributes of a resource valued by society. Generally, these definitions place little or no weight on the life or health of individual members of a population or an ecosystem. However, health impacts on individual humans are the focus of NRC regulations limiting radiological doses. A review of the regulatory requirements and the performance of facilities provides the bases to project continuation of performance within regulatory standards. For the purposes of assessing radiological impacts, the Commission has concluded that impacts are of small significance if doses and releases do not exceed permissible levels in the Commission's regulations. This definition of "small" applies to occupational doses as well as to doses to individual members of the public. Accidental releases or noncompliance with the standards could conceivably result in releases that would cause moderate or large radiological impacts. Such conditions are beyond the scope of regulations controlling normal operations and providing an adequate level of protection. Given current regulatory activities and past regulatory experience, the Commission has no reason to expect that such noncompliance will occur at a significant frequency. To the contrary, the Commission expects that future radiological impacts from the fuel cycle will represent releases and impacts within applicable regulatory limits.

4.6.1 Public Exposure

During normal operations after license renewal, small quantities of radioactivity (fission, corrosion, and activation products) will continue to be released to the environment in a manner similar to present operation. Analyses of historic effluent data presented in Appendix E have pointed to a systematic reduction in effluents (primarily airborne). While there is no empirical evidence of a leveling off, there will be a practical lower limit of effluent release.

Radioactive-waste management systems are incorporated into each plant and are designed to remove most of the fission -product radioactivity that leaks from the fuel, as well as most of the activation- and corrosion-product radioactivity produced by neutrons in the vicinity of the reactor core (Section 2.2). Improved fuel integrity in the 1980s was an important factor in reducing effluents. In addition, the effectiveness of the gaseous and liquid treatment equipment has increased significantly over the past two decades, as is evidenced by the continuously decreasing levels of effluents (NUREG/CR-2907). The amounts of radioactivity released through vents and discharge points to areas outside the plant boundaries are recorded and published semiannually in the radioactive effluent release reports for each facility. A

discussion of the environmental pathways for radioactive effluent releases to the air and water was presented in Section 3.8.1.2. This section will focus on issues more unique to license renewal.

4.6.1.1 Radionuclide Deposition

The concentration of radioactive materials in soils and sediments builds up to an equilibrium value that depends on the rate of deposition and the rate of removal. Removal can take place through radioactive decay or through chemical, biological, or physical processes. For a given rate of release, the concentrations of longer-lived radionuclides and consequently the dose rates attributable to them would continue to increase if license renewal were granted.

In Regulatory Guide 1.109, explicit guidance is provided for calculation of dose for nearly all conceivable pathways. To account for the buildup of radioactive materials, buildup factors of the form $(1 - e^{-l\,t})$ in the calculations are included, where l is the radionuclide decay constant, and t is the midpoint of a facility's operational life. Hence, only radioactive decay is used in the removal term. Initially, most of the calculations for construction and operating stage permits used 15 years as the approximate midpoint of facility operating life. This value is now more often taken to be 20 years. The potential license renewal term is an additional 20 years; thus, the effective midlife is 30 years.

At present, most of the radiation dose commitments to the population resulting from atmospheric emissions are from the noble gases (NUREG/CR-2850 1993). The noble gases do not build up in the environment. Iodine-131, of interest because it has the ability to concentrate in the thyroid, achieves equilibrium within weeks. Tritium, cobalt, and cesium normally account for the greatest proportion of the dose from liquid effluents. Tritium is not known to concentrate in sediments or solids and hence does not build up. To determine whether the added period of operation following license renewal would, by virtue of buildup, result in significant (double) added dose, the ratios of buildup factors for midlives of 30 to midlives of 20 years were evaluated. These ratios amount to a 35 percent increase for ^{137}Cs and a 6 percent increase for ^{60}Co. This added increase due to buildup will not significantly change the total dose to members of the public.

One remaining topic about buildup in the environment warrants discussion. Buildup is not explicitly accounted for in the aquatic food pathway (i.e., fish, shellfish, etc.) This pathway relies on the use of bioconcentration factors. A bioconcentration factor for a nuclide is the ratio of the concentration in biota to the radionuclide concentration in water. In certain cases, the bioaccumulation factors may require reexamination. These principally involve fish (in the human food chain) that are bottom feeders. Bottom feeders may ingest worms and other biota that may remobilize radioactive materials accumulated in the sediments.

Accumulation of radioactive materials in the environment is of concern not only to license renewal, but also to operation under present licenses. NRC reporting rules require that pathways that may arise as a result of unique conditions at a specific site considered in licensees' evaluations of radiation exposures. If an exposure pathway is likely to contribute significantly to total dose (10 percent or more to the total dose from all pathways), it must be routinely monitored and evaluated. Environmental monitoring programs are in place at all sites to provide a backup to the calculated doses based on effluent release measurements. Since these programs are ongoing for the duration of the license, locations where unique situations give rise to significant pathways not detailed in NRC Regulatory Guide 1.109 will be identified if and when they become significant. If such pathways result in doses at a plant exceeding the design objectives of Appendix I to 10 CFR Part 50, action will be required.

4.6.1.2 Direct Radiation

Radiation fields are produced around nuclear plants as a result of radioactivity within the reactor and its associated components, low-level storage containers, and components such as steam generators that have been removed from the reactor (as described in Section 3.8). Direct radiation from sources within a light water reactor plant is due primarily to ^{16}N, a radionuclide produced in the reactor core by neutron activation of ^{16}O from the water. Because the primary coolant of an LWR is contained in a heavily shielded area, dose rates in the vicinity of light water reactors are generally undetectable and are less than 1 mrem/year at the site boundary. Some plants [mostly boiling water reactors (BWRs)]

do not have completely shielded secondary systems and may contribute some measurable off-site dose. These sources of direct radiation will be unaffected by license renewal.

Original impact statements were reviewed for estimates of off-site dose from radioactive storage containers at both boiling-water reactors and pressurized-water reactors. These estimates suggested small dose contributions at site boundaries (Section 3.8.1.6). Nothing is anticipated to occur during license renewal to significantly change this estimate.

4.6.1.3 Transportation-Related Radiation Doses

The transportation of "cold" (unirradiated) nuclear fuel to the reactor, of spent irradiated fuel from the reactor, and of solid radioactive wastes from the reactor to a waste burial ground s a source of exposure considered in 10 CFR Part 51.52. The contribution of the environmental effects of such transportation to the environmental costs of license renewal of the nuclear power reactor is set forth in Summary Table S-4 from 10 CFR 51.52. This issue is discussed in Section 6.4.

4.6.1.4 Radiological Monitoring

Background measurements at all sites were obtained during the preoperational phase of the monitoring program. Thus, each facility has characterized the background levels of radioactivity and radiation and their variations among the anticipated important pathways in the areas surrounding the facilities. The operational, off-site radiological monitoring program is conducted to provide data on measurable levels of radiation and radioactive materials in the site environs in accordance with 10 CFR Parts 20 and 50. The program assists and provides backup support to the effluent-monitoring program recommended in NRC Regulatory Guide 1.21, *Measuring, Evaluating, and Reporting Radioactivity in Solid Wastes and Releases of Radioactive Materials in Liquid and Gaseous Effluents from Light-Water-Cooled Nuclear Power Plants*. Such environmental monitoring programs are conducted to augment dose calculations and to ensure that unanticipated buildups of radioactivity will not occur in the environment.

The environmental monitoring programs also identify the existence of effluents from unmonitored release points. An annual survey (land census) identifies changes in the use of unrestricted areas to provide a basis for modifying the monitoring programs.

4.6.2 Public Radiation Doses

Doses to the public during the license renewal term were estimated using current (baseline) levels and trends. For the period after license renewal, two measures of impact are appropriate. They are the dose to the maximally exposed individuals and the population dose. The latter is the average individual dose as a function of distance and sector location multiplied by the population in that sector at that distance.

4.6.2.1 Maximally Exposed Individual

Table 4.6 presents the dose to the maximally exposed individual resulting from airborne effluents as tabulated by NUMARC (1989) for the years 1985 to 1987. Under most circumstances, the dose calculations, made by the reporting utilities, result in an overestimate of dose because of conservative assumptions. The table shows that the greatest dose value for the maximally exposed individual from atmospheric releases (between 1985 and 1987) is .3 mrem.[7] On the average, about 5 percent of the sites report an annual dose of 1 mrem or greater to the maximally exposed individual. NRC has recently begun to estimate individual doses for comparison with 10 CFR Part 50, Appendix I objectives (NUREG/CR-2850 1994). Combining air and liquid pathways for calendar year 1990, operation at about 5 percent of the sites resulted in annual doses of 1-3 mrem to the total body; 32 percent of the sites, 0.1-1.0 mrem; and 63 percent of the sites, less than 0.1 mrem. A comparison of the data from Table 4.6 and from NUREG/CR-2850 (1994) with the design objective doses of Appendix I to 10 CFR Part 50 and the EPA dose limits (Section 3.8.1) shows that existing plants are operating far below allowable limits with respect to effluent control.

Table 4.6 Calculated total body dose to the maximally exposed individual from routine airborne effluents (mrem)

Plant	1985	1986	1987
Arkansas, Unit 1	--	0.0017	0.0023
Arkansas, Unit 2		0.006	0.0044
Beaver Valley	--	0.023	0.0014
Brunswick	--	--	0.028
Catawba	0.88	2.2	0.89
D. C. Cook	0.057	0.02	0.024
Cooper	0.57	0.4	0.018
Crystal River	0.022	0.21	0.2
Davis-Besse	0.0081	0.00064	0.12
J. M. Farley	0.13	0.12	0.081
Grand Gulf	0.09	0.068	0.34
Haddam Neck	1.0	0.39	0.66
Oconee	0.15	0.087	--
Oyster Creek	1.4	4.3	0.17
Peach Bottom	0.041	0.12	0.015
Pilgrim	0.49	0.027	--
Quad-Cities, Unit 1	0.002	--	0.0025
Quad-Cities, Unit 2	0.002	--	0.0021
Rancho Seco	0.17	--	--
H. B. Robinson	--	0.016	0.068
Shearon Harris	--	--	0.022
E. I. Hatch	0.093	0.004	0.13
Indian Point	0.00078	0.00049	--
Kewaunee	--	0.12	0.00001
Limerick	--	0.00079	0.00022
McGuire, Unit 1	--	0.15	0.081
McGuire, Unit 2	1.8	--	0.0036
Salem	0.016	0.028	0.047
Sequoyah	0.19	0.002	--
St. Lucie, Unit 1	0.013	0.011	0.0023
St. Lucie, Unit 2	0.0062	0.0021	0.0028
V. C. Summer	--	0.00051	0.000001
Susquehanna	0.1	0.0069	0.011
Three Mile Island	--	0.019	0.0028
Trojan	0.069	--	--
Turkey Point, Unit 1	--	0.0038	0.0087
Turkey Point, Unit 2	--	0.0042	0.0088
Waterford	--	--	0.66
Washington	--	0.013	0.024
Zion	0.044	0.092	0.00047

Source: NUMARC 1989.

Note: To convert millirem to millisievert, multiply by 0.01.

Given the conservative nature of the calculations leading to the doses of Table 4.6, the impact on maximally exposed persons around nuclear generating facilities is clearly very small.

4.6.2.2 Average Individual Dose and Population Dose Commitment

4.6.2.2.1 Recent Data

Trends for average individual doses for persons living around nuclear power plants reflect the small radiation dose levels seen in the maximally exposed individuals. Each year, NRC issues a report entitled *Population Dose Commitments Due to Radioactive Releases from Nuclear Power Plant Sites*. The latest publication is for the calendar year 1989 (NUREG/CR-2850, Vol. 11). Methods used in this series are described in Section 3.8.1. The prescribed calculational methods include several basic assumptions to ensure that the results are conservative. Table 4.7 (adapted from NUREG/CR-2850 and NUREG-0713) presents results obtained for a 15-year period ending in 1989. The numerical entries are person-rem received by those who live within a 50-mile radius of a site; data for individual sites also appear in these reports. The person-rem number is obtained by adding together the individual doses received by this population. For 1988, the cumulative person-rem varied from a low of 0.0015 at Grand Gulf to a high of 16 at McGuire. Seventy-five percent of the total came from 9 of the 67 sites, as shown in Table 4.8. (Information presented in Tables 4.8 and 4.9 was derived from NUREG/CR-2850, Vol. 10,

the most recent volume which presents data summaries with average individual doses.) The arithmetic mean annual radiation dose to people who lived in the vicinity of a U.S. nuclear power plant in 1988 was about 0.0005 mrem. The overall median for 1988 was less than 0.0003 mrem. A histogram shown in Figure 4.1 of NUREG/CR-2850 provided the information shown in Table 4.9.

Table 4.7 Summary of population and occupational doses (person-rem) for all operating nuclear power plants combined

	Population			
Year	**Liquid**	**Air**	**Total**	**Occupational**
1975	76	1,300	1,300	20,879
1976	82	390	470	26,107
1977	160	540	700	32,508
1978	110	530	640	31,801
1979	220	1,600	1,800	39,982
1980	120	57	180	53,795
1981	87	63	150	54,144
1982	50	87	140	52,190
1983	95	76	170	56,472
1984	160	120	280	55,235
1985	91	110	200	43,042
1986	71	44	110	42,381
1987	56	22	78	40,401
1988	65	9.6	75	40,769
1989	68	16	84	35,980
1990	--[a]	--	--	35,592
1991	--	--	--	28,515
1992	--	--	--	29,309

[a]Data not available.

Source: NUREG/CR-2850; NUREG-0713

Note: To convert person-rem to person-sievert, multiply by 0.01.

Table 4.8 Highest public dose data from nuclear power plant effluents, 1988

Plant	Population dose (person-rem)	Population within 50 miles (persons)	Average individual dose (mrem)
McGuire	16	1,800,000	0.0091
Summer	13	900,000	0.014
Zion	7.2	7,300,000	0.001
E. I. Hatch	6.4	350,000	0.018
Clinton	4	2,700	0.0015
Oconee	3.8	9,900	0.0039
Oyster Creek	2.2	3,600,000	0.0006
Harris	1.8	1,400,000	0.0013
Calvert Cliffs	1.7	2,800	0.00061
All sites	75	150,000,000[a]	0.0005

[a]This figure is inflated because not all sites are 100 miles apart, and some persons within each 50-mile radius were counted more than once.

Source: Adapted from NUREG/CR-2850, Vol. 10.

Note: To convert rem to sievert, or mrem to millisievert, multiply by 0.01.

Table 4.9 Individual public dose data from power plant effluents, 1988

Individual dose range (mrem)	Percentage of total	Cumulative percentage
0 to 0.000001	6 percent	6 percent
0.000001 to 0.00001	4 percent	10 percent
0.00001 to 0.00003	18 percent	28 percent
0.00003 to 0.0001	30 percent	58 percent
0.0001 to 0.0003	21 percent	79 percent
0.0003 to 0.001	13 percent	92 percent
0.001 to 0.003	5 percent	97 percent
0.003 to 0.01	< 2 percent	99 percent
0.01 to 0.03	< 1 percent	100 percent

Source: NUREG/CR-2850, Vol. 10.

Note: To convert mrem to millisievert, multiply by 0.01.

Note that 97 percent of the individuals received 0.003 mrem or less during 1988. The most recent NCRPM report on this subject gives 300 mrem/year as the U.S. average dose from natural background radiation (NCRPM 1987). The addition of 0.018 mrem at the Hatch site as a result of plant operation is well within and indistinguishable from variations in natural background radiation (see Dudney et al. 1990).

According to the National Council on Radiation Protection and Measurements report, if a person moves from the coast to the Rocky Mountains, the natural annual doses can be increased by as much as 70 mrem. This 70-mrem addition to

natural background which occurred because of a personal relocation is 7690 times greater than the average dose from operation of the McGuire nuclear facility during 1988.

4.6.2.2.2 Analysis of Current Trends

Projections into the future can be made on the basis of current trends. On that basis, average individual dose commitments were analyzed. The first objective of the analysis was to determine to what extent known information about all sites could be used to predict what the dose commitment values for each site were for the years 1979-1987. The second objective, if current dose commitments could be predicted adequately, was to use the models to predict future dose commitments for U.S. sites by extrapolating the characteristics used in the model and the population projections for the sites into future years (see Section E.3.2 for more details of this analysis).

A linear model was fitted to the dose data using combinations of independent variables. The independent variables that proved to be most predictive of the log (dose) values included calendar year, year of startup, size in megawatts, vendor (or manufacturer), and status (up or down). The linear model for estimation of air doses resulted in the following conclusions. The manufacturer with the highest air doses is Babcock-Wilcox (B-W) (but highly variable); the next highest is GE; and the lowest is Combustion Engineering (C-E). Air doses are decreasing with calendar year (for 1979 to 87) for all reactor types. The rate of decrease is fastest for GE reactors. The rate of decrease is much smaller for C-E reactors than for others, partly because these are lower to begin with. With the exception of C-E, all types have higher air doses from older reactors. For C-E, newer reactors have higher doses. Larger reactors had higher air doses. This relationship was strong and was a major contributor to the prediction of dose for each reactor site; it held true for all manufacturers but was much less evident in B-W reactors. The increase in air dose with size was largest for GE and for Westinghouse reactors. The overall model accounts for approximately 42 percent of the variation in the air dose values. For all reactor types (manufacturers), air doses decrease significantly when the reactor is operating below 25 percent capacity. This is not necessarily true for doses from liquid sources.

The linear model for estimating liquid dose resulted in the following conclusions: B-W reactors have significantly higher liquid doses than do reactors of other manufacturers, and GE reactors are next highest. Mixed sites (those with multiple reactors and different vendors) have the lowest liquid doses. GE and mixed sites have higher doses from liquid sources when they are operating below 25 percent of theoretical maximum output. Many mixed sites are partly GE reactors. All other manufacturers, all of which are pressurized-water reactors, have lower doses when they are operating below 25 percent capacity. Liquid doses are higher in older reactors only for GE reactors. For others, there is not a significant trend with reactor age. For GE reactors and for Westinghouse reactors, the larger reactors had higher liquid doses. The increase in liquid dose with megawatt capacity was much higher for GE reactors than for the other types. Liquid doses are overall much less predictable than air doses, and the resulting model fit for the liquid doses reflects this unpredictability. For liquid doses, the best-fitting model accounted for only about 20 percent of the overall variability in the model.

Liquid effluents are not decreasing significantly with time for any of the five types, although the coefficients are negative except for the mixed sites. Thus, the general trend with time is for air doses to decrease and for doses from liquid sources to decrease less rapidly. The decreasing trend in total dose commitment results mostly from the lower air dose estimates.

On the basis of the coefficients estimated with this analysis, it is apparent that the dose commitments are being systematically lowered. Results of the analysis were used to plot historical data against predicted doses (see sample figures in Section E.3). These figures portray how each sample reactor has performed with respect to other reactors in its class (i.e., age, size, vendor). Again, the dominant theme is the decline in dose commitment, which is almost universally observed. Even if there were a sudden cessation of the decline in dose to the public, levels are sufficiently low to represent an insignificant impact to humans.

4.6.2.3 Projected Doses for License Renewal

On the basis of information presented in the preceding section, radiation doses to members of the public can be projected into the license renewal period. The three factors upon which judgments can be made are the maximally exposed individual, the average exposed individual, and the cumulative exposure of a population. At present, each of these measures meets the design objectives and regulations. No aspect of future operation was identified that would substantially alter this situation. Rather, evidence presented above suggests that radioactive effluents and hence doses to the public are decreasing.

Maximum individual doses are reported in semiannual effluent release reports, and when these doses exceed Appendix I design objectives, the staff pursues remedial action. Thus these issues are handled on a case-by-case basis. A review of the atmospheric release data sources suggests that, in any given year, up to 5 percent of the power plants produce radiation doses of approximately 20 percent of the Appendix I design objectives (NUMARC 1989). No aging phenomenon has been identified which is expected to increase public radiation doses. Since the design objective provides a point of reference for visibility to the NRC staff, normally operating reactors are not expected to reach regulatory dose limits more often in the period after license renewal than they do at present. For these reasons, impacts to maximally exposed individuals in the public during future operation under license renewal are judged to be radiologically unchanged from present operations.

Similarly, radiation exposure to the average individual and collective dose to the population around a nuclear power plant are not anticipated to increase from present levels in the period after license renewal. Analysis of all available pertinent information suggests that, if anything, radiation doses to the public are decreasing.

Ninety-nine percent of the population within 50 miles of any plant received a dose of 0.003 mrem or less from nuclear power plant effluents in 1988 (Table 4.9). In 1990, the average dose to persons living within an 80-km (50-mile) distance from nuclear power plants was less than 0.001 mrem (NUREG/CR-2850 v. 12). If all 150 million people living within 80 km (50 miles) of nuclear plants receive 0.001 mrem/year for 70 years, the collective dose will be 10,500 person-rem. Using a risk coefficient of 5×10^{-4} cancer fatalities per person-rem, approximately 5 fatalities can be hypothesized. Among the 150 million people, about 30 million will die of spontaneous cancer. Hence, the added risk of cancer fatality is less than 1 in 6 million national cancer fatalities.

From a different perspective, the population of 150 million people would accumulate 45,000,000 person-rem/year from natural background radiation. The annual collective dose from operation of all 118 nuclear power plants, assuming an annual average individual dose as high as 0.002 mrem per person, is 300 person-rem. This is 150,000 times less than the collective dose from naturally occurring radiation. From this perspective, the contribution of nuclear power plants to the radiation dose to members of the public is not significant. Future increases in populations will result in proportional increases in population doses; that is, a doubling of the population around the 118 plants would result in a 600 person-rem annual collective dose. However, the population increase would not change the fact that the collective dose from plant operation is still 150,000 times less than that from naturally occurring radiation.

Cumulative impacts to average individual members of the public can be viewed from the same perspective presented in Section 3.8.1.7. During operation under license renewal, the average annual dose to the public from nuclear power plant operations will remain very small, less than 0.001 mrem/year. Cumulative radiation doses to members of the public will remain about 360 mrem/year and nuclear power plant operation will remain a very small part (less than 0.0003 percent) of the ionizing radiation dose to an average member of the U.S. population.

4.6.2.4 Mitigation

In addition to the regulations within 10 CFR Part 20.1101 (see Section 3.8.1.8) which speak directly to required operation under ALARA principles, 10 CFR Part 50.36a imposes conditions on licensees in the form of technical specifications on effluents from nuclear power reactors. These specifications are intended to keep releases of radioactive materials to unrestricted areas during operations to ALARA levels. Appendix I to 10 CFR Part 50 provides

numerical guidance on dose-design objectives and limiting conditions for operation of LWRs to meet the ALARA requirements. These regulations will remain in effect during the period of license renewal.

Evidence presented in Section 3.6, Appendix E, and this section demonstrates that the ALARA process has been effective at controlling and reducing radiation doses to the public. Radiation doses to the public are declining both for average and total doses (Table 4.7) and for individual doses (Tables 4.10 and 4.11). No changes in the operation of power plants under license renewal are expected to increase radiation doses to the public compared with current operation. Because effective mitigation procedures are already in place, there is no need to consider additional mitigation during the period of license renewal.

4.6.2.5 Conclusion

Radiation doses to members of the public from current operation of nuclear power plants have been examined from a variety of perspectives and the impacts were found to be well within design objectives and regulations in each instance. No effect of aging that would significantly affect the radioactive effluents has been identified. Both maximum individual and average doses are expected to remain well within design objectives and regulations. In about 5 percent of the plants, maximum individual doses are approximately 20 percent of the Appendix I design objective. All other plants are operating far below this level.

Because no reason was identified to expect effluents to increase in the period after license renewal, continued operation well within regulatory limits is anticipated. The staff concludes that the significance of radiation exposures to the public attributable to operation after license renewal will be small at all sites. It should also be noted that the estimated cancer risk to the average individual due to plant operations is much less than 1×10^{-6}. No mitigation measures beyond those implemented during the current term license would be warranted because current mitigation practices have resulted in declining public radiation doses and are expected to continue to do so. This is a Category 1 issue.

4.6.3 Occupational Radiation Dose

To determine the significance of the estimated occupational dose during the license renewal term, the staff has examined the baseline trends in cumulative annual occupational dose at pressurized-water reactors and boiling-water reactors and the projected increments to occupational dose due to extended plant operation. These projections were compared with the occupational dose limit requirements of 10 CFR Part 20 and with dose levels now being experienced and were also used as the basis for estimates of cancer risk, which were compared with the spontaneous cancer rate.

4.6.3.1 Baseline Occupational Dose

Occupational radiation protection programs in place at nuclear power plants have maintained an annual average individual dose of only 0.28 rem during 1992 (Table 4.10), compared with an exposure limit of 5 rem. Furthermore, the distribution of individual dose (Table 4.11) indicates that only 3 people received doses at the highest reported level of between 4 and 5 rem and less than 0.5 percent of the workers received doses in excess of 2 rem. (Other supportive historical data can be found in Appendix E.)

Table 4.10 Light-water reactor (LWR) occupational whole-body dose data for boiling-water reactors (BWRs) and pressurized-water reactors (PWRs)

	Annual average whole-body dose (rem)		
Year	**All LWRs**	**All BWRs**	**All PWRs**
1973	0.94	0.85	1.00
1974	0.74	0.81	0.68
1975	0.82	0.86	0.76
1976	0.75	0.71	0.79
1977	0.84	0.89	0.65
1978	0.74	0.74	0.65

1979	0.66	0.73	0.56
1980	0.72	0.87	0.52
1981	0.71	0.73	0.61
1982	0.66	0.76	0.53
1983	0.70	0.82	0.56
1984	0.59	0.66	0.49
1985	0.46	0.54	0.41
1986	0.42	0.51	0.37
1987	0.39	0.40	0.38
1988	0.40	0.45	0.36
1989	0.34	0.36	0.33
1990	0.34	0.38	0.31
1991	0.29	0.31	0.27
1992	0.28	0.32	0.26

Source: NUREG-0713.

Note: To convert millirem to millisievert, multiply by 0.01.

Table 4.11 Number of workers at boiling-water reactor (BWRs), pressurized-water reactor (PWRs), and light-water reactor (LWRs) installations who received whole-body doses within specified ranges during 1992.

Dose range (rem)	BWRs	PWRs	LWRs
<0.1 (measurable)	17,740	28,220	45,960
0.1-0.25	8,094	12,503	20,597
0.25-0.5	6,883	10,259	17,142
0.5-0.75	3,995	4,926	8,881
0.75-1.00	2,339	2,287	4,626
1.00-2.00	2,366	2,602	5,468
2.00-3.00	204	245	449
3.00-4.00	11	6	17
4.00-5.00	3	0	3
5.00-6.00	0	0	0
6.00-7.00	0	0	0
7.00-12.00	0	0	0
>12.00	0	0	0
Totals	42,095	61,048	103,143

Source: NUREG-0713, 1993.

Note: To convert millirem to millisievert, multiply by 0.01.

As plants age, there will be slight increases in radioactive inventories, resulting in slight increases in occupational radiation doses.

4.6.3.2 Projected Doses for License Renewal

During the license renewal term, the greatest increment to occupational dose over present doses would occur during a 10-year in-service inspection refueling (Table 2.8). The average dose increment related to the 10-year in-service inspection refueling would raise boiling-water reactor averages from a present 360 person-rem (Table 3.12) by 91 person-rem (10-year in-service inspection refueling, Table 2.8) to 451 person-rem and raise pressurized-water reactors

from 219 person-rem by 51 person-rem to 270 person-rem. Under the conservative scenario (Table 2.11) these dose increments would add 108 person-rem to BWRs and 66 person-rem to PWRs. These increased levels for a single year are similar to the levels experienced at some plants during the past 2 two reporting years (Table 3.13). After the period of refurbishment, routine operating conditions are expected to cause, industry wide, approximately 32,000 person-rem/year exposure to plant personnel [i.e., 5 percent increase over the currently experienced 30,000 person-mrem/year (Appendix B)]. With the conservative scenario, there is about an 8 percent increase in radiation dose over current operating experience (Tables 2.8 and 2.11).

Within the radiation bioeffects community, one school of thought holds that any radiation exposure is accompanied by a risk of cancer. The other perspective is that below a certain dose and dose rate, no cancer risk is involved. The lowest statistically significant dose associated with excess cancer fatalities among the atomic bomb survivors is considered by ICRP 60 (1991) to be 20 rad. The collective dose to the U.S. population from natural background radiation is approximately 75 million person-rem/year; while not declaring itself on one side or the other on the risk issue, the 1990 BEIR-V report states that there may be no risk from this natural background radiation. If there is no risk from natural background radiation, the annual 32,000 person-rem dose may be of little concern. At the other extreme, if it is assumed that individual doses of less than 20 rem may be included in the collective dose without causing an exaggerated result, the full 32,000 person-rem dose to all workers at nuclear power plants for the typical case may be multiplied by the best stimate risk coefficient for workers (4×10^{-4}); this risk coefficient leads to an annual total of 13 deaths. Of these, 12 would be expected because of normal present-day operation and 1 would be expected to result from aging- and refurbishment-related changes in operation.

This analysis of typically expected conditions provides a range of 0 to 13 deaths induced per year as a result of license renewal, with one of these fatalities resulting from added dose due to aging; very little difference is estimated under the conservative scenario. Thus, radiation doses attributable to plant aging accumulated during the license renewal term might result in a 5 percent increase in the calculated cancer incidence to plant workers, but there may be no increase. The significance of the possible increase depends altogether on the degree of credibility assigned to the risk coefficient derived at high dose and dose rate and applied for low dose and dose rate. In any case, the risk associated with occupational radiation exposures after license renewal is not expected to be significantly different from that during the initial license term.

Currently, occupational radiation doses are on the order of 0.4 rem/year in addition to the 0.36 rem/year received by the typical U.S. resident. If occupational exposure increases by 8 percent as estimated for the conservative scenario, cumulative occupational radiation doses will increase from about 0.76 rem/year to 0.79 rem/year for those working at nuclear plants that operate after the initial license term. Under the typical scenario, occupational doses would increase approximately 5 percent over the currently experienced levels increasing average exposures to 0.78 rem/year.

4.6.3.3 Conclusion

Occupational doses attributable to normal operation during the license renewal term have been examined from several different perspectives. First, projected occupational doses during the period of maximum added dose, the 10-year in-service inspection refueling, are within the range of doses experienced during the past 2 reporting years. Second, the average dose increase of 5 to 8 percent to the typical plant worker

would still maintain doses well below regulatory limits. Therefore, occupational radiation exposure during the term of the renewed license meets the standard of small significance. No mitigation measures beyond those implemented during the current term license would be warranted because the ALARA process continues to be effective in reducing radiation doses. This is a Category 1 issue.

4.7 Socioeconomic Impacts

This section reports on the socioeconomic impacts associated with nuclear power plant operations during the license renewal term. The staff reviewed the following socioeconomic issues: (1) changes to local housing caused by plant-induced population growth; (2) the magnitude of all nuclear plant tax payments in relation to total revenues in host communities; (3) disruptions to local public services (i.e., education, transportation, public safety, social services, public utilities, and tourism/recreation); (4) changes to local land use and development patterns resulting from plant-induced population growth and all tax payments; (5) the effects of plant operations on local employment and income levels; (6) plant-related disturbances to historic resources at and around the plant site; and (7) plant-related disturbances to aesthetic resources. Of these socioeconomic impacts only those directly affecting the natural and built environment are carried forward to the decision whether to renew an operating license. The regional economic impact including income, employment, and taxes are not considered in the license renewal decision. As in Chapter 3, plant-induced population growth was studied as a potential influence on a number of the impacts listed above.

The methodological techniques used to evaluate impacts are described briefly in Section 3.7.1 and are detailed in Section C.1; a brief summary of these methods is provided here. For this chapter, past impacts related to plant operations were studied so that the impacts of future operations could be predicted. The impacts projected for the case study sites represent the range of potential impacts at existing nuclear plants because the sample plants were selected to represent the range of nuclear plant sites nationwide. A detailed discussion of site-specific findings is presented in Sections C.4.1 through C.4.7 of Appendix C.

The size of the work force required during the license renewal term is an important determinant of population growth. The permanent license renewal term work force is expected to include those personnel who were on-site during the initial license term, up to 60 additional permanent operations workers per unit, and temporary refueling and maintenance workers during periodic plant outages. Estimates in Chapter 2 and Appendix B of additional work force required during license-renewal-term operations indicate that only one additional worker will be required on a continuous basis for maintenance and inspection activities. The more conservative figure (60 persons per unit) is used in the analysis to account for workers (contractors or rotating utility employees) who are not associated with refueling but may be on-site intermittently. The 60 persons per unit analysis represents an upper bound of the possible socioeconomic impacts.

In addition to those workers previously required during operations-period outages, another 30 workers will be needed for periodic outages during the license renewal term. Potential impacts associated with the presence of periodic outage workers were not systematically evaluated because the duration of these outages will be short (typically 3-4 months). However, evidence about past effects resulting from the temporary influx of refueling/maintenance workers was collected and used in the analysis to predict the impacts of refueling/maintenance during the license renewal term.

The site-specific projections presented here are based on the assumption that no other major construction projects will occur at the same time as refueling and maintenance activities. The potential cumulative population-related impacts during license-renewal-term refueling and maintenance activities would result from the combined populations associated with refueling/maintenance and other concurrent construction activities (not necessarily related to the power plant). Analyses of various refurbishment scenarios (see Appendix C and Chapter 3) suggest the potential magnitude of cumulative impacts resulting from different work force sizes. For example, about 800 refueling/maintenance workers (i.e., about the mean number of workers involved in regularly scheduled outages) combined with another construction work force of about 200, for a total of 1000 workers, would have only small adverse impacts at all but the most remote and sparsely populated sites (e.g., Wolf Creek). Combined work forces of 2,300 could induce large impacts to housing, education, and transportation at some sites. A sensitivity analysis indicates that impact magnitudes would not be increased by a work force as large as 3,400.

The population growth that has resulted from operations at the case study plants has been small, ranging from less than 0.1 percent to 13 percent of a local area's total population (see Table 4.12 and Appendix C). As discussed in Section 3.7.1, the staff believes that Indian Point and Wolf Creek serve as the lower and upper bounds, respectively, of

operations-related growth as a percentage of a study area's total population. Thus, population growth that has resulted from worker in-migration is estimated to range at all plants from less than 0.1 percent to 13 percent.

Certain characteristics of the license renewal term work force (e.g., percentage residing in the study area, percentage moving into the study area, percentage of in-migrants accompanied by families) were assumed to be similar to those of the current plant staff and were used to make projections concerning population growth. Information about the impacts that have resulted from population growth during a plant's operation was used to estimate the population-driven impacts that would occur during the plant's license renewal term.

Based on predictions for the case studies, new plant-related population growth resulting from the license renewal term at any nuclear plant would be much smaller than the growth that has resulted from operations thus far. Growth related to increased employment during the license renewal term is expected to represent between less than 0.1 percent and 0.8 percent of the local area's total population for all plants. Because the number of additional permanent workers required at any plant would be relatively small (up to 60 per unit) and because the communities around the plants have already accommodated the existing work force during operations, it is likely that license renewal terms would result in only minimal long-term plant-related population increases for most plants. Therefore, new (incremental) population-driven impacts generally would be minimal, and impacts already occurring during current operations would continue with only slight increases during the license renewal term.

Table 4.12 Impact area population growth associated with current and additional permanent plant staff at seven plants in the case study[a]

Plant	Current number of permanent plant staff	Population increase from current staff	Population growth from current staff as a percentage of study area's total population	Projected population increase from additional permanent staff	Population growth from additional staff as a percentage of study area's total population
Arkansas Nuclear One	2205	3418	7.4%	189	0.3%
D. C. Cook					
Bridgman/Lake Township	1252	141	3.0%	15	0.3%
Berrien County		1109	0.7%	104	< 0.1%
Diablo Canyon	1300	2149	1.0%	199	< 0.1%
Indian Point					
Dutchess County	1335	415	0.2%	39	< 0.1%
Westchester County		316	< 0.1%	32	< 0.1%
Oconee	2300	504	0.9%	41	< 0.1%
Three Mile Island	1086	246	1.7%	13	< 0.1%
Wolf Creek	1044	1137	13.3%	68	0.8%

[a]Includes both direct and indirect workers and their families.

Source: Staff computations.

4.7.1 Housing

Two types of housing impacts related to workers' demand for housing may occur during license renewal term operations: (1) new housing impacts resulting from the in-migration of additional plant operations workers and (2) the continuing impacts arising from the housing demands of workers involved in periodic plant outages for refueling and

maintenance. A third type of impact, unrelated to workers' demands, is the continuing impact of the plant on housing value and marketability.

4.7.1.1 Definition of Significance Levels

Detailed definitions of significance levels of impacts that result from increased housing demand are provided in Section 3.7.2. In summary, small impacts result when no discernible change in housing availability occurs, changes in rental rates and housing values are similar to those occurring statewide, and no housing construction or conversion occurs. Moderate impacts result when there is a discernable reduction in housing availability, rental rates and housing values exceed the inflation rate elsewhere in the state, and minor housing conversions or temporary additions occur. Large impacts occur when project-related demand results in very limited housing availability, considerable increases in rental rates and housing values, and substantial conversion of housing units.

Definitions of the significance of the plant's impacts on the desirability of housing located close to the plant follow. A small impact on housing desirability results when very few or no instances of outmigration occur because of the operation of the nuclear power plant. Also, very few cases of prospective home buyers refusing a home because of its proximity to the plant would occur. Under normal plant operations, housing values should remain within the range of regional fair market prices. Moderate impacts on housing desirability include occasional difficulty in finding a buyer for a house because of its proximity to a nuclear plant. Impacts are also moderate if the proximity of the nuclear plant is cited as a reason for discounting the sale price of the housing units. Impacts on housing desirability are considered large if substantial migration from houses in the vicinity of the plant occurs or if realtors find it difficult or impossible to sell homes in the area. A large impact may also result if a sustained and substantial drop in housing value occurs because of the house's proximity to the plant. Such impacts may be evidenced by a gradual increase in housing value with increasing distance from the plant.

4.7.1.2 Analysis

Housing Demand

The in-migration of plant personnel associated with current operations at each of the seven case study sites has had small impacts on housing. The number of operations workers required at the plants is small relative to original construction work force size, and the operations workers have been introduced gradually to the site so that housing demand has also increased gradually. The demand for housing by refueling workers was found to have a large impact at only one site (Wolf Creek). In that case, approximately 640 additional workers were on-site during the plant outage.

Based on impacts associated with current term operations, population-driven housing impacts resulting from additional permanent workers in the license renewal term would be small at all case study sites. The housing demand resulting from an additional 60 workers per unit would not be large enough to strain the housing markets of communities in which the plants are located and would result in a small impact even in areas where little growth in housing is expected.

Impacts related to the demand for housing resulting from the in-migration of refueling workers are projected to continue to be the same as those currently being experienced--with slight exacerbation due to the additional 30 temporary refueling workers (Section 4.7.1). Thus large impacts may continue at one case study site, Wolf Creek. At other case study plants, these continuing housing impacts associated with in-migrating refueling workers would remain small to moderate.

Housing Marketability

The prevailing belief of realtors and planners in communities surrounding the case study plants is that the plants have had little if any effect on the marketability or value of homes in the vicinity. Housing choices of local residents are rarely affected by the presence of the plant. However, buyers from outside the community are occasionally averse to purchasing properties close to a nuclear power plant. Housing markets have not been affected by this situation because of its infrequency. The value of housing units in close proximity to the plants has experienced only small impacts. A

slight negative impact did result because of the accident at Three Mile Island Unit 2; the price of houses in two small subdivisions close to the plant dropped slightly below fair market value after the accident and stayed that way for a brief period following it. At some sites, housing values have increased slightly because of amenities such as sewer systems and improved school systems that were made possible because of tax payments by the nuclear plant.

The license renewal term of the plants will be very much like the original operations period but will include additional safety and maintenance activities. Thus, impacts on housing marketability and values that have occurred during operations will continue during the license renewal term. At all case study sites, only small impacts on housing value and marketability are projected to continue.

4.7.1.3 Conclusion

No demand-related impacts are expected during regular operations, and only small impacts to housing value and marketability are projected. During continuing periodic refueling/maintenance outages, housing demand impacts during refueling/maintenance may range from small to large at various sites. The observed relationship between demographic characteristics and projected housing impacts at the case study sites suggests that large impacts are possible when a work force exceeding 600 persons is required at a site located in a low-population area or in an area that has or recently has had growth control measures that limit housing development. This is a Category 2 issue.

4.7.2 Taxes

This section describes the importance of nuclear plant tax payments as a source of local government revenue. These payments may be made directly to local government jurisdictions or indirectly to local government jurisdictions through state tax and revenue-sharing programs. The tax impacts of operations during the license renewal term were projected based on the current magnitude of tax payments by nuclear plants in relation to total revenues in their local areas (Section C.4.1.3).

4.7.2.1 Definition of Significance Levels

Significance levels during license term renewal operations are considered small if new tax payments are < 10 percent of the taxing jurisdiction's revenue, moderate if payments are 10 to 20 percent, and large if payments represent > 20 percent of revenue. A detailed description of these significance categories is in Section 3.7.3.1. However, the tax payments used to calculate impacts during the license renewal term are all property taxes paid by the nuclear plant, not just the increment due to refurbishment-related improvements.

4.7.2.2 Analysis

The primary taxing authorities for most of the case study plants are the county and city in which the plant is sited and the local school district. The tax-related impacts experienced by those jurisdictions vary widely, depending on the relative size of the taxing jurisdictions and the taxing structure of the state in which the case study is located. The magnitude of current nuclear plant tax payments relative to total local revenues and the associated impact levels is shown in Table 4.13.

The primary tax-related impact expected to occur during the license renewal term at the seven case study plants would be the continuation of tax revenues paid by utilities to local taxing authorities. An additional new tax impact would result from the increase in each plant's assessed value because of refurbishment-based improvements and the associated increase in tax payments. The magnitude of this increase is unknown and may depend on the state's (or other assessing authority's) method of assessment and previous agreements or laws that limit increases in assessed valuation. Generally, the relative importance of tax payments to local jurisdictions during the license renewal term would be similar to that of payments during the current term, although the size of the payments is projected to increase somewhat (see Table 4.13).

4.7.2.3 Conclusion

Tax-related impacts from the continued operation of nuclear plants would range from small to large, as at the case study sites. Tax impacts would consist of the continued effect of direct and indirect tax payments to local jurisdictions, which began before license renewal, in combination with the increase in payments because of refurbishment-related improvements. Impacts of this kind are judged to be beneficial.

4.7.3 Public Services

The approach used to determine past impacts of plant operations and project future public service impacts during the license renewal term is discussed in the introduction to Section 3.7 (also see Section C.4.1.3). For most public services, future impacts were determined based on the projected number of in-migrating workers. To project impacts to local educational systems, however, the number of workers accompanied by their families and the associated family size were also important.

The levels of significance for impacts to public services are the same as those discussed under refurbishment: (1) education, Section 3.7.4.1; (2) transportation, Section 3.7.4.2; (3) public safety, Section 3.7.4.3; (4) social services, Section 3.7.4.4; (5) public utilities, Section 3.7.4.5; and (6) tourism and recreation, Section 3.7.4.6. In general, impacts are small if the existing infrastructure (facilities, programs, and staff) could accommodate any plant-related demand without a noticeable effect on the level of service. Moderate impacts arise when the demand for service or use of the infrastructure is sizeable and would noticeably decrease the level of service or require additional resources to maintain the level of service. Large impacts would result when new programs, upgraded or new facilities, or substantial additional staff are required because of plant-related demand (see Section 3.7.4).

Table 4.13 Current property taxes as percent of total revenues for taxing jurisdiction at seven nuclear power plants in the case study

Plant	Local taxing jurisdiction	Percentage of revenue	Magnitude of beneficial effect
Arkansas Nuclear One	Pope County (study area)	26	Large
	Russellville School District	42	Large
D. C. Cook	Berrien County (study area)	14	Moderate
	Lake Township (study area)	88	Large
	Bridgman School District	81	Large
Diablo Canyon	San Luis Obispo Co. (study area)	11	Moderate
	San Luis Coastal Unified School District	39	Large
Indian Point	Westchester County (study area)	0	Small
	Town of Cortlandt	33	Large
	Hudson School District	37	Large
	Village of Buchannan	49	Large
Oconee	Oconee County (study area)	14	Moderate
	Oconee School District	14	Moderate
Three Mile Island	Londonderry Township (study area)	< 1	Small
	Middletown Borough (study area)	< 1	Small
	Royalton Borough (study area)	< 1	Small
	Lower Dauphin School District	< 1	Small
Wolf Creek	Coffey County (study area)	45	Large
	Burlington School District	63	Large

Source: Staff computations.

4.7.3.1 Education

Few if any operations-related impacts on education were found at the case study sites. Communities had no substantial problems assimilating the children of the plant staff into local school systems.

Educational impacts during the license renewal term would be small at all case-study sites, as has been the case during past operations. The number of new students would be low relative to the size of current school systems. This small impact could be mitigated by hiring additional staff members for the schools, building new educational facilities, or adding modular classrooms to existing facilities. However, because the impact is so small and implementation of these measures would be costly, such measures would not be warranted.

Based on the case-study analysis, educational impacts are projected to be of small significance at all plants. Because no additional teaching staff or classroom space would be needed, no mitigation measures beyond those implemented during the current term license would be warranted. This is a Category 1 issue.

4.7.3.2 Transportation

Transportation impacts related to current operations have been small at most sites but small to moderate at Three Mile Island and Wolf Creek during refueling and maintenance outages. Impacts to transportation during the license renewal term would be similar to those experienced during current operations and would be driven mainly by the workers involved in current plant operations. The 60 additional permanent workers expected during the license renewal term would represent only a small incremental addition to the continuing impacts from past normal operations, while the 30 incremental workers required during periodic refueling/maintenance outages would represent only a small increase in the number of workers typically involved in periodic outages under the original term of the license.

Based on past and projected impacts at the case study sites, transportation impacts would continue to be of small significance at all sites during operations and would be of small or moderate significance during scheduled refueling and maintenance outages. Because impacts are determined primarily by road conditions existing at the time of the project and cannot be easily forecast, a site specific review will be necessary to determine whether impacts are likely to be small or moderate and whether mitigation measures may be warranted.This is a Category 2 issue.

4.7.3.3 Public Safety

Overall, no serious disruptions of services occurred at the case study sites during the operations period. Existing services were adequate to handle the influx of plant staff. Impacts during license renewal would be largely the same as those that occurred during past operations. There would be little or no need for additional police or fire personnel. For this reason impacts would be of small significance at all sites. This small impact could be mitigated by hiring additional police or fire personnel, purchasing additional fire or police vehicles, building police or fire stations, or making improvements and additions to existing facilities. However, because existing services are projected to be adequate to handle plant-related demands and because mitigative measures would be costly, no mitigation measures beyond those implemented during the current term license would be warranted. This is a Category 1 issue.

4.7.3.4 Social Services

Information from case study sites and the literature support a determination of only small impacts on local social services associated with past operations. Impacts to social services during license renewal would be essentially the same as those that have occurred during past operations and would be of small significance at all sites. These impacts could be mitigated by hiring additional staff to administer existing social service programs or establishing new social service programs. However, because no change in the level of services is anticipated and because mitigative measures would be costly, no mitigation measures beyond those implemented during the current term license would be warranted. This is a Category 1 issue.

4.7.3.5 Public Utilities

Overall, there have been minimal impacts to public utilities as a result of plant operations. The existing capacity of public utilities was sufficient to accommodate the small influx of plant staff, and some locales experienced a noticeable decrease in the level of demand for services with the completion of original plant construction. Although impacts to public utilities during license renewal would be very similar to those that occurred during past operations, an increased

problem with water availability may occur in conjunction with plant demand and plant-related population growth as a result of current water shortages in some areas. These shortages may result in moderate impacts to public water supplies at sites with limited water availability. This is a Category 2 issue.

4.7.3.6 Tourism and Recreation

Impacts to recreation and tourism during the license renewal term would be largely the same as those that have occurred during operations in the current term. Few or no adverse effects have occurred during current operations at the case-study sites, and some positive effects have resulted because taxes paid by the plants have allowed some municipalities to improve their recreational facilities and programs. Some plants have also increased local tourism. Based on the case study analysis, it is projected that any adverse impacts would be small at all plants and would primarily be the continuation of impacts of past operations. Some positive impact to tourism and recreation also may continue. These impacts could be mitigated by improving existing recreation facilities or adding recreation areas to meet the expanded demand. Because current facilities would be adequate to accommodate local demand and adding new facilities would be costly, no mitigation measures beyond those implemented during the current term license would be warranted. This is a Category 1 issue.

4.7.4 Off-Site Land Use

This section evaluates the impact of plant-induced changes on local land-use and development patterns produced by plant operation during the license renewal term. Detailed definitions of the three magnitudes of land-use change are provided in Section 3.7.5.1. The magnitude of change to off-site land use is considered small if very little new development and minimal changes to an area's land-use pattern result. Moderate change results if considerable new development and some changes to the land-use pattern occur. The magnitude of change is large if large-scale new development and major changes in the land use pattern occur. During the renewal term, new land-use impacts could result from plant-related population growth or from the use by local governments of the plants' tax payments to provide public services that encourage development. This analysis examines the land-use changes associated with past operations to project the potential new impacts of operations during the license renewal term. Conflicts between off-site land use and nuclear plant operations are not expected because federal regulations (10 CFR Part 54) require each licensee to ensure that its nuclear plant remains appropriately protected from any site-related hazards (e.g., airplanes, toxic gases), new or existing at the time the plant was licensed.

4.7.4.1 Analysis

In most cases, the land-use changes that have resulted from operations at the case study plants have been moderate (see Table 4.14 and Appendix C). However, local property tax payments that the utility makes on its nuclear plants have stimulated large indirect land-use changes in one study area because the local jurisdictions has been able to provide the public services (e.g., sewer and water lines, roads) necessary to support substantial industrial development.

For population-driven land-use impacts, the impact predictors are the same as those discussed for refurbishment (Section 3.7.5). The assessment of new tax-driven land-use impacts considered (1) the size of the plant's tax payments relative to the community's total revenues, (2) the nature of the community's existing land-use pattern, and (3) the extent to which the community already has public services in place to support and guide development. In general, if the plant's tax payments are projected to be small relative to the community's total revenue, new tax-driven land-use changes during the plant's license renewal term would be small, especially where the community has preestablished patterns of development and has provided adequate public services to support and guide development. If the plant's tax payments are projected to be medium to large relative to the community's total revenue, new tax-driven land-use changes would be moderate. This is most likely to be true where the community has no preestablished patterns of development (i.e., land use plans or controls) or has not provided adequate public services to support and guide development in the past, especially infrastructure that would allow industrial development. If the plant's tax payments are projected to be a dominant source of the community's total revenue, new tax-driven land-use changes would be

large. This would be especially true where the community has no preestablished pattern of development or has not provided adequate public services to support and guide development in the past.

It is projected that population growth related to worker in-migration in the license renewal term would result in small land-use impacts for all of the socioeconomic case study areas (see Appendix C). In contrast, it is projected that new tax-driven land-use impacts would be large at one case study site and moderate at the others during the license renewal term.

4.7.4.2 Conclusion

Based on predictions for the case study plants, it is projected that all new population-driven land-use changes during the license renewal term at all nuclear plants will be small because population growth caused by license renewal will represent a much smaller percentage of the local area's total population than has operations-related growth. Also, any conflicts between offsite land use and nuclear plant operations are expected to be small. In contrast, it is projected that new *tax-driven* land-use changes may be moderate at a number of sites and large at some others. Because land use changes may be perceived by some community members as adverse and by others as beneficial, the staff is unable to assess generically the potential significance of site-specific off-site land use impacts. This is a Category 2 issue.

Table 4.14 Levels of operations-related land-use change at seven case study sites

Plant	Magnitude
Arkansas Nuclear One	Moderate
D. C. Cook	Moderate
Diablo Canyon	Small
Indian Point	Moderate
Oconee	Moderate
Three Mile Island	Small
Wolf Creek	Large[a]

[a]Change due to tax-related impacts.

Source: The staff.

4.7.5 Economic Structure

The effects of plant operations during the license renewal term on local employment are predicted by comparing the projected number of direct and indirect jobs created during the license renewal term at a plant with projected total employment for the appropriate study area. Relatively few *new* plant-related jobs would be created during the license renewal term. Nearly all plant-related employment (and associated impacts) expected during that time period would represent a continuation of employment (and impacts) from past operations.

4.7.5.1 Definition of Significance Levels

A detailed explanation of levels of impact significance is in Section 3.7.6.1. Economic effects are small if plant-related employment accounts for <5 percent of total study area employment, moderate if it accounts for 5 to 10 percent, and large if it accounts for more than 10 percent of total study area employment. In summary, the relevant workers are those involved in plant operation, including both new and existing workers. Also, if the magnitude of plant-related employment relative to total study area employment is close to the upper bound for a particular significance level, the impact should be placed in the next higher significance category if the site is remotely located and has a low population density. A site is considered remote if, within a distance of 80 km (50 miles), there is no city with more than 100,000 persons. Low population density is less than 50 persons per 2.6 km^2 (1 square mile). This adjustment factor is necessary to determine the importance of plant employment to the local area in light of its proximity to other areas with competing employment opportunities.

4.7.5.2 Analysis

The economic impacts that have resulted from operating the case study plants range from small to large (see Table 4.15 and Appendix C). Plant-related employment ranges from less than 1 percent to 18 percent of total employment in the communities near the case study plants.

The economic impacts projected to occur during the license renewal term would be primarily a continuation of impacts that already have occurred. At most case study sites, the share of total local employment represented by plant-related employment will be the same as or slightly less than that during current operations (Table 4.15).

4.7.5.3 Conclusion

Based on the findings for the case study sites, economic impacts would be beneficial at all nuclear plant sites. These beneficial impacts would range from small to large.

Table 4.15 Current and projected employment effects of plant operation for the sites in the case study[a]

	Current operations		License renewal term operations	
Plant	**Percentage of study area employment[b]**	**Magnitude of impact**	**Percentage of study employment[b]**	**Magnitude of impact**
Arkansas Nuclear One	12	Large	8.9	Large
D. C. Cook	8	Moderate	8.1	Moderate
Bridgman/Lake Township Berrien Co.	2	Small	1.8	Small
Diablo Canyon	2	Small	1.2	Small
Indian Point	< 1	Small	< 1.0	Small
Oconee	7	Moderate	3.6	Small
Three Mile Island	13	Large	9.8	Large
Wolf Creek	18	Large	7.1	Moderate

[a]Includes the effect of direct *and* indirect jobs and income created by plant operations.
[b]>By place of residence.

Source: Appendix C.

4.7.6 Aesthetic Resources

This section evaluates the impacts on aesthetic resources from continued operation during an extended license renewal period. Significance levels of impacts are the same as those described in Section 3.7.8. The analysis of aesthetic impacts focuses on the visibility and perception of the plants' buildings, particularly containment structures and cooling towers and their associated water vapor plumes. These site features are often visible from neighborhoods, roads, and recreation-based water bodies over a wide area. However, no new visual changes are expected during the renewal term, and impacts primarily would be those that currently exist and would change only as the public's perceptions changed or as new information about affected resources arose.

The evaluation of impacts of past power plant operations and projected future impacts on aesthetic resources involved the following: (1) staff examination of local perceptions at the seven case study sites, as reported by key informants; (2) a brief survey of the original and eventually realized aesthetic impacts at other operating nuclear power plants; (3) a survey of relevant academic literature; and (4) a review of recent newspaper and magazine articles related to these issues. In addition, the staff reviewed several final environmental impact statements prepared by NRC for plants located in areas where aesthetic impacts were perceived to be an important issue: the Indian Point Nuclear Power Plant,

located in the lower Hudson River Valley in New York (NUREG-0042, NUREG-0574, Jones and Jones 1975); the Greene County Nuclear Plant in the mid-Hudson River Valley (NUREG-0512); the Montague Nuclear Plant, in north Central Massachusetts (NUREG-0084); and Floating Nuclear Plant, an offshore location (NUREG-0394). Finally, the staff reviewed research sponsored by NRC that developed an econometric model for explaining and predicting visual aesthetic impacts.

4.7.6.1 Analysis

Nuclear power plants--particularly those with natural draft cooling towers--stand out starkly from their backgrounds both physically and symbolically. Their containment buildings and, when present, their hyperbolic cooling towers mark these industrial facilities as decidedly different, although their novelty typically appears to wear off for people who view them repeatedly.

Nuclear plants are usually situated in open areas near bodies of water, rendering cooling towers even more visible. Although they are visible from as far away as 10 miles, the structures are typically partially obscured by trees, buildings, or even slight changes in topography. There are few environments where such structures are perceived as well integrated with surrounding landscapes. Additionally, the visible vapor plumes associated with cooling towers can rise more than 5000 ft above the towers and extend as far as 9 miles downwind. Such a presence, although visible only part of the time under certain meteorological and seasonal conditions, extends the plant-related viewshed considerably beyond that of a tower alone.

At Indian Point, opposition to the plant is difficult to separate from opposition to its effect on aesthetic values, which, according to critics, have been diminished by the plant (K. Kennedy; D. Samson; N. Castro; D. Clyde; L. Gobrecht; K. Sauer telephone interviews with James Saulsbury, June 22, 1990). However, based on a viewshed analysis by landscape architects, the plant is either not visible from or is only insignificantly visible from historical sites in the area (Jones and Jones 1975). The plant is visible from the Peekskill Waterfront, from the Stoney Point Marina, from several established areas in Buchanan and Peekskill, and from approaches on the Hudson River (NUREG-0574). Although opposition to a nuclear facility and aesthetic concerns may both be issues in Westchester County, New York, it appears to be far from the situation in South Carolina (Oconee) and Kansas (Wolf Creek). Structures of the D. C. Cook plant (Michigan) and the Diablo Canyon plant (California) are sufficiently hidden or integrated into the existing landscapes that it is difficult to generalize about the public's attitude toward effects on aesthetic resources. The surrounding community seems generally well accustomed to the Arkansas Nuclear One plant in rural Arkansas and has some reservations only about the cooling tower and plume. The 1979 accident at the Three Mile Island plant (Pennsylvania) illustrates how attitudes seem to have directly affected aesthetic preferences (see Appendix C).

From the analysis of the case study plants (summarized in Table 4.16), perceptions of adverse impacts on aesthetic resources from the continued operation of nuclear power plants are probable in limited circumstances. Such circumstances would include areas that have concentrated aesthetic resources within a plant's viewshed or areas where past associations with a plant could diminish one's enjoyment of the physical environment. But even in these circumstances, the staff has not found clear and widespread evidence of adverse consequences to community institutions and functions that would justify characterizing a site as having a large impact.

Among the case study sites, Wolf Creek, Three Mile Island, Oconee, and Diablo Canyon all have had some impacts on prehistoric sites. At Wolf Creek, the presence of the nuclear power plant was credited as a positive force in local preservation efforts because (1) it brought new people into the area, who in turn influenced local citizens regarding the value and benefits that support of historic preservation could bring to a community, and (2) the increased incomes and expanded work force resulted in some neglected structures becoming occupied and repaired (M. Sirico; M. Reams telephone interviews with James Saulsbury, June 22, 1990).

Historic and archaeological resources can vary widely from site to site. Furthermore, they may have been identified only recently (e.g., an archaeological site) or their historic significance only recently established (e.g., a historic building). For these and other reasons, the National Historic Preservation Act of 1966 requires that the agency

undertaking a major action consult with the State Historic Preservation Office to determine whether historic resources exist on or near the site and whether they will be affected by the proposed action.

4.7.6.2 Conclusion

The staff believes that the case studies and the other sources of information consulted have bounded the impacts of continued operation of nuclear power plants on aesthetic resources. Under the proposed provisions of license renewal, no applicant is expected to alter the existing visual intrusiveness of any plant. Certainly, the staff expects that some individuals at nuclear plant sites would perceive the plant structures and vapor plumes negatively. These perceptions will be based on purely aesthetic considerations (for instance, that the plant is out of character or scale with the community), on environmental and safety concerns, or on an anti-nuclear orientation. Whatever the consideration, the staff believes that these individuals' enjoyment of the environment will be depreciated. However, because license renewal will not alter the visual intrusiveness of any plant, the number of individuals having negative perceptions would probably remain constant. The number of such individuals has not been sufficient to measurably impact community institutions and functions in the past, so the staff believes that the impacts on aesthetic resources would be small in the future. For these individuals, mitigation through the use of nonreflective surfaces and tree plantings would be impractical from both efficiency and cost-benefit perspectives; therefore, no mitigation measures beyond those implemented during the current term license would be warranted. The impact on aesthetic resources is a Category 1 issue.

4.7.7 Historic and Archaeological Resources

This section evaluates potential impacts of license renewal term operations to historic and archaeological resources.

4.7.7.1 Definition of Significance Levels

Sites are considered to have small impacts of historic and archaeological resources (1) if the State Historic Preservation Office (SHPO) identifies no significant resources on or near the site, or (2) if the SHPO identifies (or has previously identified) significant historic resources but determines they will not be affected by plant refurbishment, transmission lines, and license-renewal-term operations and there are no complaints from the affected public about altered historic character, and (3) if the conditions associated with moderate impacts do not occur. Moderate impacts may result if historic resources, determined by the SHPO not to be eligible for the National Register, nonetheless are thought by the SHPO or local historians to have local historic value and to contribute substantially to an area's sense of historic character. Sites are considered to have large impacts to historic resources if resources determined by the SHPO to have significant historic or archaeological value would be disturbed or otherwise have their historic character altered through refurbishment activity, installation of new transmission lines, or any other construction (e.g., for waste storage facility). Determinations of significance of impacts are made through consultation with the state historic preservation officer.

4.7.7.2 Analysis

Impacts to historic and archaeological resources during the license-renewal term would be largely the same as those occurring during the current operations period. At the case-study sites, only small impacts are known to occur. However, any construction activity during the license renewal term, such as building a new waste storage facility or a new access road to a transmission corridor, could induce new impacts. Also, it is possible that previously unknown historic and archaeological resources will be identified or their historic significance will be established in the future. As discussed at length in Section 3.7.7, a determination of impact to historic and archaeological resources must be made through consultation with the SHPO as mandated by the National Historic Preservation Act.

4.7.7.3 Conclusions

Although it is unlikely that historic or archaeological impacts of moderate or large significance would occur during the license-renewal term, determinations of impacts to historic and archaeological resources are site-specific in nature and must be made through consultation with the SHPO. Any mitigation measures must likewise be determined on a case-by

-case basis. Because site-specific and activity-specific information is needed to assess the significance of impacts to historic and archaeological resources, this is a Category 2 issue.

4.8 Groundwater Use and Quality

[**Prev** | **Next** | **Table of Contents**]

4.8.1 Groundwater Use

Those nuclear plants that use groundwater may affect the utility of groundwater to neighbors. This impact could occur

as a direct effect of pumping groundwater, thereby either lowering the water table and reducing the availability or inducing infiltration of water of lesser quality into the ground. Neighboring groundwater users could also be affected indirectly if construction or operation of the power plant were to disrupt the normal recharge of the groundwater aquifer. The impact to neighboring groundwater users is likely to be most significant at a site where water resources are limited. Groundwater usage impact may be important at those sites where a power plant's usage rate exceeds 0.0063 m^3/s (100 gpm). Lower usage rates are not expected to impact sole source or other aquifers significantly.

Groundwater is not used at all nuclear power plants, and where it is used, the rate of usage varies greatly among users. Only Grand Gulf uses groundwater as a source of makeup to the condenser cooling system. This largest user employs a Ranney well collection system to draw groundwater from the Mississippi River alluvial aquifer. Other plants use lesser amounts of groundwater for service water systems or for potable water. Some licensed plants intentionally lower the groundwater table, either by pumping or by a system of drains, in the vicinity of building foundations.

The groundwater-use issue was evaluated by examining the groundwater requirements of appropriate subsets of nuclear power plants. Four subsets were established to encompass the entire scope of groundwater-use issues as described above. One subset consists of sites in regions where the water table or artesian water levels historically have been falling for a number of years (Atlantic and Gulf coastal plains, upper Midwest, Arizona, and California). A second subset consists of sites on both high ground and low-lying areas adjacent to the Great Lakes, the Atlantic and Gulf coasts, and the lower Mississippi River where extensive operational dewatering systems may have been installed. A third subset consists of plants with cooling towers adjacent to small rivers. The fourth subset consists of the only plant using groundwater for cooling tower makeup water.

Data were taken from appropriate final safety analysis reports (FSARs) and final environmental statements (FESs) pertaining to operation of nuclear power plants, and sites having potential groundwater-use conflicts were identified. Appropriate state water-use permitting agency representatives and U.S. Geological Survey (USGS) personnel were interviewed by telephone for additional information. Evaluations and conclusions for each of these groundwater-use scenarios are presented separately in the following discussion.

4.8.1.1 Potable and Service Water

Only one of the upper Midwest sites examined withdraws more than 0.0063 m^3/s (100 gal/min) of groundwater for potable and service water systems [Duane Arnold is permitted to withdraw 0.19 m^3/s (3000 gal/min) by the Water Supply Section, Environmental Protection Division, Iowa Department of Natural Resources]. Other plants (Braidwood, Cook, Dresden, Kewaunee, La Salle, Point Beach, and Zion) in the upper Midwest withdraw small amounts 19×10^{-5} to 536×10^{-5} m^3s (3 to 85 gal/min) of groundwater for potable water systems, or none at all. Except for Duane Arnold, all service water systems are supplied by alternative resources (municipal water systems, lakes, or rivers).

Several Atlantic and Gulf coastal plain sites that are not near municipal water suppliers withdraw larger amounts of groundwater than the upper Midwest sites for potable and service water systems. Withdrawals for these sites (Calvert Cliffs, Crystal River, Hope Salem, and River Bend) range from 0.025 to 0.050 m^3/s (400 to 800 gal/min). Other coastal sites (Turkey Point, St. Lucie, and Waterford) obtain potable and service water from municipal suppliers.

Only one of the two western sites withdraws groundwater for potable and service water systems. The Palo Verde site in Arizona withdraws 0.063 m^3/s (1000 gal/min) from a confined aquifer.

Many plants use groundwater only for potable water systems and require less than 0.0063 m^3/s (100 gal/min). The cones of depression around such wells generally remain within the plant boundary (typically the case for upper Midwest sites). Where the cone of depression does not extend beyond the site boundary, the plant groundwater use is not expected to contribute to cumulative impacts on groundwater supply. For sites having plant wells that produce more than 0.0063 m^3/s (100 gal/min) (sites that draw both service and potable water from wells), cones of depression may extend beyond the plant boundary. For these sites, a reasonable likelihood exists that off-site private wells will be impacted. The staff considers plant contributions to groundwater use to be of small significance where the plant groundwater consumption is less than 0.0063 m^3/s (100 gal/min).

The effect of groundwater usage on neighboring groundwater users will depend on the rate of usage and the distance to the neighboring well. A neighboring well close to the well field of a plant using a large amount of groundwater could experience some decline in yield. The power plants using groundwater are generally remotely located, and groundwater is not thought to be a limited resource. Conflicts that do arise should be resolvable by taking steps to restore yield of the affected water supply, such as deepening the affected wells.

In conclusion, this is a Category 1 issue for those plants using less than 0.0063 m^3/s (100 gal/min) of groundwater for potable and service water. At this usage rate, there would be no significant depletion of the groundwater supply which could impact other users. Because the cone of depression would not extend beyond the site boundary, mitigation is not warranted. However, if use exceeds 0.0063 m^3/s (100 gal/min), there is a possibility of moderate or large adverse effects, and mitigation may be warranted. Therefore, this is a Category 2 issue for those plants using more than 0.0063 m^3/s (100 gal/min) of groundwater.

4.8.1.2 Operational Dewatering Systems

Operational dewatering systems are in place at the Perry site (on a bluff overlooking Lake Erie) and the Calvert Cliffs site (on a bluff overlooking Chesapeake Bay). The Perry site is actively dewatered by pumping wells, and the water table is depressed by more than 15 m (50 ft). During construction dewatering, the cone of depression extended outward about 150 m (500 ft) (it remained inside the site boundary). Less vigorous pumping is required during operational dewatering, and the cone of depression is reduced. If pumping were discontinued, the water table would rise approximately 6 m (20 ft), groundwater would continue to drain passively through a gravity drain system, and the cone of depression would continue to shrink. The Calvert Cliffs site is passively dewatered by an underdrain system (natural gravity flow). The base of the reactor containment structure at Calvert Cliffs is more than 6 m (20 ft) below sea level, whereas the water table is maintained several feet above sea level. There is no impact to neighboring groundwater users at either of these sites.

None of the sites in low-lying areas of the Atlantic coastal plain had operational dewatering systems (i.e., Hope Creek, Millstone, Oyster Creek, St. Lucie, and Turkey Point). At St. Lucie, a nstruction site dewatering system [pumped at 0.80 m^3/s (13,000 gal/min)] was decommissioned before the plant was placed in operation. The St. Lucie construction/ operation case history is typical of plants in low-lying areas.

For other sites using active dewatering systems (systems in which groundwater is pumped from the aquifer), the same bounding conditions apply as for groundwater use in potable and service water systems. That is, for operational dewatering systems that do not exceed 0.0063 m^3/s (100 gal/min), impacts would be of only small significance. Because the cone of depression would not extend beyond the site boundaries, no mitigation measures beyond those implemented during the current term license would be warranted. For plants that withdraw more than 0.0063 m^3/s (100 gal/min), the significance of the groundwater withdrawal cannot be determined generically. Groundwater use through operational dewatering is a Category 2 issue.

4.8.1.3 Surface Water Withdrawals for Cooling Towers

Many plants located on small rivers have cooling towers. Rivers often supply alluvial aquifers, and large-scale withdrawals of makeup water for evaporative loss could impact an alluvial aquifer during periods of low flow. However, withdrawal from the river is regulated by local or state agencies.

For example, the withdrawal of water at Duane Arnold is restricted at low flow (Water Use Permit). Under normal flow conditions, Duane Arnold withdraws 1.6 m^3/s (27,000 gal/min) from the Cedar River as cooling tower makeup water. This plant continues to operate, at least temporarily, during low flow by withdrawing water from a standby reservoir on a tributary to Cedar River. This reservoir is used only during emergencies when low-flow conditions exist on the Cedar River.

Indirect groundwater-use conflict resulting from surface water withdrawal from a small river for use in cooling towers is a potentially important concern. Because the significance of these conflicts cannot be determined at this time, this is a Category 2 issue.

4.8.1.4 Use of Groundwater for Cooling Tower Makeup

The Ranney wells at Grand Gulf withdraw groundwater from Mississippi River alluvium at a rate of 1.5 m^3/s [24,000 gal/min (34 million gal/day)] for use as cooling tower makeup water to avoid the aquatic effects of a surface water intake. Groundwater in Mississippi River alluvium is used primarily for irrigation and catfish farming (Jamie Crawford, Mississippi Bureau of Land and Water Resources, telephone interview with W. P. Staub, ORNL, Oak Ridge, Tennessee, December 3, 1990). Generally, groundwater from the alluvial aquifer is too high is iron content to be used for municipal water supplies.

The impact of cooling water intake on groundwater at the Grand Gulf plant (the only plant employing Ranney wells) does not conflict with other groundwater uses in the area. However, conflicts could develop if other uses develop (e.g., additional catfish farms). Because it is not possible to predict whether conflicts will occur at Grand Gulf or the significance of impacts associated with Ranney well use at other plants (if they were to adopt their use), it is not possible to determine the significance of Ranney well use at this time. This is a Category 2 issue.

4.8.2 Groundwater Quality

Impairment of groundwater quality could occur at estuary and ocean site facilities that withdraw groundwater for any purpose (e.g., potable and service water systems, operational dewatering). Long-term pumping of groundwater from coastal plain aquifers by industrial and municipal facilities has contributed to saltwater intrusion in some areas of nearly every Atlantic and Gulf Coast state (USGS 1990). The saltwater intrusion issue was evaluated by examining groundwater use at selected nuclear power plants sited on estuaries and oceanic coastlines. Operational dewatering is not taking place at any of the estuaries or coastal sites.

Groundwater quality could also be impaired at inland sites where groundwater may be replaced by poorer quality river water through induced infiltration (NUREG-0777). Potential impairment of groundwater quality at facilities that have large cooling ponds is discussed in Section 4.8.3.

At this time, no licensed plant is located on a sole-source aquifer (i.e., sole or primary source of water supply for an area). If a site occupied by one of the licensed nuclear plants were in an area designated as a sole-source aquifer, NRC would cooperate with responsible agencies in making required information available. Under the provisions of the SDWA, states must establish demonstration programs for protection of critical aquifers.

Slightly elevated concentrations of tritium have been observed in groundwater adjacent to the Prairie Island plant on the Mississippi River in southern Minnesota (Minnesota Environmental Quality Board 1991; Minnesota Department of Public Service 1992). These elevated concentrations have not altered the current use of groundwater near the site. One off-site privately owned well has reported tritium concentrations ranging between 800 and 1000 pCi/L (dates of

measurements are uncertain, but they are no more recent than 1991). By comparison, tritium concentrations in North American streams were about 10 pCi/L prior to the beginning of the nuclear age and about 4000 pCi/L at the end of large-scale atmospheric testing of nuclear weapons in 1963. Radioactive decay of tritium between 1963 and 1992 would produce a concentration of about 715 pCi/L (DOE 1992). If tritium concentrations at Prairie Island were as high as 1000 pCi/L in 1992, then perhaps one-third of the tritium contamination found in local groundwater might be attributable to the Prairie Island plant and the balance would be attributable to atmospheric testing. Future radioactive decay of tritium would further reduce its overall concentration in groundwater. Natural decay and tritium release to the environment at Prairie Island might be expected to reach equilibrium eventually at around 300 pCi/L. This compares with a regulatory limit of 20,000 pCi/L in drinking water.

Data were taken from appropriate FSARs and FESs pertaining to the operation of nuclear power plants. Sites having a potential impact on groundwater quality were identified; appropriate state water-use permitting agency representatives and USGS personnel were interviewed by telephone for additional information. Groundwater quality impacts are considered to be of small significance when the plant does not contribute to changes in groundwater quality that would preclude current and future uses of the groundwater. Hence, the contribution of plant operations (during the license renewal period) to the cumulative impacts of major activities on groundwater quality would be relatively small.

4.8.2.1 Potable and Service Water

Groundwater withdrawals in estuary and oceanic areas can cause saltwater intrusion into freshwater aquifers. Saltwater intrusion, where it occurs, is the cumulative effect of groundwater consumption by users in the affected region and therefore could have a cumulative impact on groundwater quality. Estuary and oceanic sites located in rural areas withdraw groundwater from confined aquifers at rates between 0.025 and 0.063 m^3/s (400 and 1000 gal/min) (e.g., for Calvert Cliffs, Crystal River, and Hope Creek-Salem). In contrast, sites located near urban areas purchase water for their potable and service water systems from municipal suppliers (e.g., Millstone, St. Lucie, and Turkey Point), which themselves use groundwater resources. Directly or indirectly, all nuclear power plants in Florida derive their potable and service water supply from groundwater. The staff considers nuclear plant contributions to saltwater intrusion to have small significance on groundwater quality where the plant's groundwater consumption is less than 10 percent of the regional total.

Withdrawal of potable and service water at nuclear power plants represents a small percentage of county-wide water supplies derived from groundwater in both urban and rural counties of Florida. According to Marella (1988, data for 1985), 2.98 and 21.3 m^3/s (68 and 486 million gal/day) of groundwater were withdrawn for all uses in semi-urban St. Lucie and urban Dade Counties where the St. Lucie and Turkey Point plants are located, tively. Both of these plants purchase about 0.063 m^3/s [1.4 million gal/day (1000 gal/min)] from municipal sources in these counties. About 1.09 m^3/s (25 million gal/day) of groundwater were withdrawn in rural Citrus County, compared with 1.4 million gal/day withdrawn by Crystal River plant wells in that county. Nuclear plant groundwater consumption at its current rate would not contribute significantly to any future saltwater intrusion that might occur.

Ken Miller (Maryland Water Resources Administration, Water Rights Division, telephone interview with W. P. Staub, ORNL, Oak Ridge, Tennessee, November 28, 1990) believes that saltwater intrusion of the Aquia aquifer, which serves the Calvert Cliffs plant, is unlikely. He bases his conclusion on the fact that this aquifer is confined and changes to an aquitard on its downdip (seaward) side as illustrated in USGS (1988) and Chapelle and Drummond (1983).

Geologic conditions as described above are site specific. The USGS (1988) states that the Raritan-Magothy aquifer in New Jersey is susceptible to saltwater intrusion and is already contaminated in some places. However, based on data for Florida, power plant groundwater consumption ranges from about 0.3 percent to 6 percent of the total in urban and rural regions, respectively. Saltwater intrusion is more likely to occur in urban regions because of the greater demand for water, and electric power generation would be a small contributor.

The potential for inducing saltwater intrusion is considered to be of small significance at all sites because groundwater consumption from confined aquifers for potable and service water uses by nuclear power plants is a small fraction of groundwater use in all cases. Where saltwater intrusion has been a problem, the large uses have been agricultural (irrigation) and municipal groundwater consumption. Mitigation for saltwater intrusion, if needed, would likely take the form of groundwater withdrawal curtailments. Because nuclear plant water consumption represents a small fraction of total consumption, consumption curtailments of large groundwater users (i.e., municipal or agricultural users) are more likely. Consequently, groundwater use curtailments are not expected to be warranted for nuclear plants to mitigate saltwater intrusion impacts. However, even if pro-rata curtailments of groundwater consumption were required of all users, nuclear plants could accommodate most conceivable reductions without adversely affecting their operations. Therefore, this is a Category 1 issue.

4.8.2.2 Groundwater Withdrawal at Inland Sites

Grand Gulf uses large quantities of groundwater from an alluvial aquifer as described in Section 4.8.1.4. Geohydrologic modeling has predicted that groundwater would be replaced by river water of lesser quality by induced infiltration (NUREG-0777). A groundwater monitoring system is currently being installed at Grand Gulf, but no data are currently available to validate the model. Nevertheless, the model's prediction is reasonable.

The net flow of the infiltrating river water will be into the Grand Gulf Ranney well collectors. Thus, water quality change will be largely confined to the plant. Any other users of groundwater from the same formation would induce infiltration in a similar manner. The quality of Mississippi River water would not preclude the current uses of the groundwater from the alluvium. Long-term use of Ranney wells may cause groundwater quality to approach the water quality of the adjoining river. Therefore, the change in water quality resulting from use of Ranney wells would be of small significance at any site. The only possible mitigation for a plant using Ranney wells would be to construct and operate a water intake structure in the nearby water body. However, because the change in groundwater quality would not preclude current and future uses and because building a surface water intake structure would be costly and have adverse environmental effects of its own (Sect. 4.8.1.4), no mitigation measures beyond those implemented during the current term license would be warranted. This is a Category 1 issue. Because groundwater quality level would never be lower than that of the nearby Mississippi River, groundwater withdrawal for Grand Gulf's use would not contribute significantly to the cumulative impacts of water infiltration into the aquifer.

4.8.3 Groundwater Quality Impacts of Cooling Ponds

Alteration of groundwater quality in shallow, unconfined aquifers may occur at the nine nuclear power plant sites that use cooling ponds (Section 4.4.1). Irrigation and private domestic water supplies are the principal off-site uses of these groundwater resources. This issue was evaluated by examining off-site land uses and potential for shallow groundwater utilization at all nine sites. The impact on private uses of groundwater was subdivided into two sets based on current land use: (1) sites surrounded by undeveloped land, including saltwater marshes, and (2) sites adjacent to farmland. Short- and long-term potential for utilization of shallow groundwater resources depends on current land use.

Four plant sites are surrounded by undeveloped land or have large exclusion areas around them. These plants are Clinton (large exclusion area), Dresden (surrounded by undeveloped woodlands), South Texas, and Turkey Point (surrounded by saltwater marshes). Although off-site groundwater is not being used currently near these sites, its long-term use is not necessarily precluded.

The remaining five sites have relatively small exclusion areas and are adjacent to farmland. These plants are Braidwood, La Salle, Robinson, Summer, and Wolf Creek. A limited amount of off-site groundwater is being used currently or could potentially be used at these sites in the near term.

All of the cooling ponds are unlined and have surface areas that range from 637 to 2960 ha (1573 to 7310 acres). Cooling pond water has higher concentrations (than makeup water) of total dissolved solids due to evaporation, heavy metals due to contact of cooling water with plant equipment, and chlorinated organic compounds used to prevent

biofouling of equipment. The average concentration of total dissolved solids in continuously recycled cooling pond water is about 2.8 times as large as that in makeup water.

Water seeping from these ponds commingles with underlying shallow groundwater and produces a groundwater mound. Groundwater spreads laterally away from this mound. The commingled groundwater will eventually reach off-site areas. At this point, groundwater quality will be between that of the cooling pond water and the quality of the naturally occurring groundwater. These groundwater contaminant plumes are not expected to alter current groundwater -use categories (as defined by various state regulatory agencies) because contaminant concentrations are not expected to rise significantly. However, groundwater quality is not routinely monitored for contaminants specific to cooling ponds.

Depending on groundwater velocity and adsorption characteristics, some contaminants (diluted by dispersion in natural groundwater) may reach off-site areas during the initial term of the license. As plant operation continues, groundwater quality at points near the site may approach the quality of the cooling pond water. If necessary, mitigation of groundwater contamination due to cooling pond operations might take the form of lining the ponds to reduce infiltration or cleaning groundwater by pumping and treating, both of which would be costly.

The extent of groundwater contamination by cooling ponds has not been documented at this time. Off-site groundwater monitoring is not standard practice at these sites, and there are no data with which to characterize the significance of potential off-site groundwater contamination. For those plants with cooling ponds located in a salt marsh (South Texas and Turkey Point), groundwater quality is not a significant concern because groundwater quality beneath salt marshes is too poor for human use. Because continued infiltration into the shallow aquifer will not change its groundwater use category (which is already restricted to industrial uses only) and because potential mitigation measures would be costly, no mitigation measures beyond those implemented during the current term license would be warranted. Therefore, for plants with cooling ponds located in salt marshes, this is a Category 1 issue. Groundwater in salt marshes is already restricted to industrial use, and there is no mechanism by which cooling pond water infiltrating into the groundwater would change its use category. The impact on groundwater quality for plants with cooling ponds that are not located in salt marshes is a Category 2 issue.

4.9 Summary of Impacts of Operation

[**Prev** | **Next** | **Table of Contents**]

The conclusions about the environmental impacts of nuclear power plant operation during a license renewal term are summarized below.

Threatened and Endangered Species

- It is not possible to reach a conclusion about the significance of potential impacts to threatened and endangered species at this time because (1) the significance of impacts on such species cannot be assessed without site- and project-specific information that will not be available until the time of license renewal and (2) additional species that are threatened with extinction and that may be adversely affected by plant operations may be identified between the present and the time of license renewal. This is a Category 2 issue.

Surface Water Quality, Hydrology, and Use

- The staff examined nine aspects of water quality that might be affected by power plant operations: current patterns at intake and discharge structures, salinity gradients, temperature effects on sediment transport, altered thermal stratification of lakes, scouring from discharged cooling water, eutrophication, discharge of biocides, discharge of other chemical contaminants (e.g., metals), and discharge of sanitary wastes. Open-cycle cooling systems are more likely than other cooling systems to have such effects because they withdraw and discharge very large volumes of water; however, the impacts for each of these effects were found to be of small significance for all plants,

regardless of cooling system type. For each type of impact, the staff considered potential mitigation measures but found that none were warranted because they would be costly and would have very small environmental benefits. These are Category 1 issues.

- The staff found no potential for water use conflicts or riperian plant and animal community impacts of moderate or large significance for plants with open-cycle cooling systems because they are used on large water bodies. Because the potential mitigation measures are costly and because the potential benefits are small, the staff does not consider mitigation to be warranted. These are Category 1 issues.
- The staff found that water use conflicts and the effects of consumptive water use on in-stream aquatic and riparian terrestrial communities could be of moderate significance at some plants that employ cooling-tower or cooling-pond systems because they are often located near smaller water bodies. For plants with these cooling systems, these are Category 2 issues.

Aquatic Ecology

- The staff examined 12 potential effects that nuclear power plant cooling systems may have on aquatic ecology: (1) impingement of fish; (2) entrainment of fish (early life stages); (3) entrainment of phytoplankton and zooplankton; (4) thermal discharge effects; (5) cold shock; (6) thermal plume barriers to migrating fish; (7) premature emergence of aquatic insects; (8) stimulation of nuisance organisms; (9) losses from predation, parasitism, and disease among organisms exposed to sublethal stresses; (10) gas supersaturation; (11) low dissolved oxygen in the discharge; and (12) accumulation of contaminants in sediments or biota. Except for three potential impacts (entrainment of fish and shellfish, impingement of fish and shellfish, and thermal discharge effects), each of these was found to be of small significance at all plants. Because mitigation would be costly and provide little environmental benefit, no additional mitigation measures beyond those implemented during the current license term are warranted. These are Category 1 issues. The other three impacts would be of small significance at all plants employing cooling-tower cooling systems. Because mitigation would be costly and provide little environmental benefit, no additional mitigation measures beyond those implemented during the current license term are warranted. For those plants, these are Category 1 issues. However, the impacts may be of greater significance at some plants employing open-cycle or cooling-pond systems; and these are Category 2 issues for those plants.

Groundwater Use and Quality

- The staff found that groundwater use of less than 100 gal/min is of small significance because the cone of depression will not extend beyond the site boundary. Conflicts might result from several types of groundwater use by nuclear power plants. If groundwater conflicts arose, they could be resolvable by deepening the affected wells, but no such mitigation is warranted because sites producing less than 0.0063 m^3/s (100 gal/min) would not have a cone of depression that extends beyond the site boundary. This is a Category 1 issue. Plants that extract more than 0.0063 m^3/s (100 gal/min), including plants using Ranney wells, may have groundwater use conflicts of moderate or large significance. Groundwater use is a Category 2 issue for such plants.
- Cooling system makeup water consumption may cause groundwater use conflicts. During times of low flow, surface water withdrawals for cooling tower makeup from small rivers can reduce groundwater recharge. Because the significance of such impacts cannot be determined generically, this is a Category 2 issue.
- Groundwater withdrawals could cause adverse effects on groundwater quality by inducing intrusion of lower-quality groundwater into the aquifer. The staff found that the significance of these potential impacts are of small significance in all cases. Because all plants except Grand Gulf use relatively small quantities of groundwater and surface water intrusion at Grand Gulf would not preclude current water uses, the staff found that mitigation was not warranted. This is a Category 1 issue.
- Cooling ponds leak an undetermined quantity of water through the pond bottom. Because the water in cooling ponds is elevated in salts and metals, such leakage may contaminate groundwater. The staff found that groundwater quality impacts of ponds located in salt marshes would be of small significance in all cases because salt marshes

already have poor water quality. This is a Category 1 issue. Cooling ponds that are not located in salt marshes may have groundwater quality impacts of small, moderate, or large significance. This is a Category 2 issue.

Air Quality

- Small amounts of ozone and substantially smaller amounts of oxides of nitrogen are produced by transmission lines; however, ozone concentrations generated by transmission lines are too low to cause any significant effects. The minute amounts of oxides of nitrogen produced are also insignificant. Thus, air quality impacts associated with the operational transmission lines during the renewal term are expected to be of small significance at all sites. Potential mitigation measures would be very costly and are not warranted. This is a Category 1 issue.

Terrestrial Ecology

- The potential impact of cooling tower drift on crops and ornamental vegetation arising from operations during the license renewal term is expected to be of small significance for all nuclear plants. No mitigation measures beyond those implemented during the current license term are warranted because there have been no measurable effects on crops or ornamental vegetation from cooling tower drift. This is a Category 1 issue.
- The impact of cooling towers on natural plant communities would continue to be unmeasurable as a result of license renewal and will therefore be of small significance. Because the impacts of cooling tower drift on native plants are expected to be small and because potential mitigation measures would be costly, no mitigation measures beyond those during the current term license would be warranted. This is a Category 1 issue.
- Bird mortality from collision with power lines associated with nuclear plants is of small significance for all plants because bird mortality is expected to remain a small fraction of total collision mortality associated with all types of man-made objects. Because the numbers of birds killed from collision with cooling towers are not large enough to affect population stability or the ecosystem, consideration of further mitigation is not warranted. Both bird collosion with power lines and bird collision with cooling towers are Category 1 issues.
- Because no threat to the stability of local wildlife populations or vegetation communities is found for any cooling pond, the impacts are found to be of small significance. Potential mitigation measures would include excluding wildlife (e.g., birds) from contaminated ponds, converting to a dry cooling system, or reducing plant output during fogging or icing conditions. The impacts are found to be so minor that consideration of additional mitigation measures is not warranted. These effects of cooling ponds are so minor and so localized that cumulative impacts are not a concern. This is a Category 1 issue.
- Maintaining power-line ROWs causes fluctuations in wildlife populations, but the long-term effects are of small significance. The staff found that bird collision with transmission lines are of small significance. Also, transmission line maintenance and repair would have impacts of only small significance on floodplains and wetlands. In each case, the staff found that potential mitigation measures beyond those implemented during the current license term would be costly and provide little environmental benefit, and thus are not warranted. These are Category 1 issues.
- Wildlife, livestock, and plants residing in power-line EMF apparently grow, survive, and reproduce as well as expected in the absence of EMF. The potential impact of EMF on terrestrial resources during the license renewal term is considered to be of small significance for all plants. Because the impact is of small significance and because mitigation measures could create additional environmental impacts and would be costly, no mitigation measures beyond those implemented during the current term license would be warranted. This is a Category 1 issue.

Land Use

- Land use restrictions are necessary within transmission-line ROWs. The staff found these impacts to be of small significance at all sites. Mitigation beyond that imposed when ROWs were established might include relocating the transmission line. The staff concluded that such mitigation would not be warranted because it would be very costly and provide little environmental benefit. This is a Category 1 issue.

Human Health

- During the license renewal term, the radiation dose commitment to the total worker population is projected to increase less than 5 percent at nuclear power plants under the typical scenario and less than 8 percent at any plant under the conservative scenario. The present operating experience results in about 30,000 person-rem/year for all licensed plants combined. After refurbishment, routine operating conditions are expected to result in 32,000 person-rem/year for all plants combined. The risk associated with occupational radiation exposures after license renewal is expected to be of small significance at all plants. No mitigation measures beyond those implemented during the current license term are warranted because the existing ALARA process continues to be effective in reducing radiation doses. This is a Category 1 issue.
- Among the 150 million people who live within 50 miles of a U.S. nuclear power plant, about 30 million will die of spontaneous cancer unrelated to radiation exposure from nuclear power plants. This number is compared with approximately 5 calculated fatalities associated with potential nuclear-power-plant-induced cancer. The estimated annual cancer risk to the average individual is less than 1×10^{-6}. Public exposure to radiation during the license renewal term is of small significance at all sites, and no mitigation measures beyond those implemented during the current license term are warranted because current mitigation practices have resulted in declining public radiation doses and are expected to continue to do so. This is a Category 1 issue.
- The significance of potential for electrical shock from charges induced by transmission lines that may occur during the license renewal term cannot be evaluated generically because no NESC review was performed for some of the earlier licensed plants. For those that underwent an NESC review, a change in the transmission line voltage may have been made since issuance of the initial operating license, or changes in land use since issuance of the original license could have occurred. This is a Category 2 issue.
- There is no consensus among scientists on whether 60-Hz electromagnetic fields have a measurable human health impact. Because of inconclusive scientific evidence, the chronic effects of electromagnetic fields would be not be categorized as either a Category 1 or 2 issue. If NRC finds that a consensus has been reached that there are adverse health effects, all license renewal applicants will have to address it in the license renewal process.
- Occupational health questions related to thermophilic organisms, like *Legionella* sp., are currently resolved using proven industrial hygiene principles to minimize worker exposures to these organisms in mists of cooling towers. Adverse occupational health effects associated with microorganisms are expected to be of small significance at all sites. Aside from continued application of accepted industrial hygiene procedures, no additional mitigation measures beyond those implemented during the current license term are warranted. This is a Category 1 issue.
- Thermophilic organisms may or may not be influenced by operation of nuclear power plants. The issue is largely unstudied. However, NRC recognizes a potential health problem stemming from heated effluents. Public health questions require additional consideration for the 25 plants using cooling ponds, lakes, canals, or small rivers because the operation of these plants may significantly enhance the presence of thermophilic organisms. The data for these sites is not now at hand and it is impossible with current knowledge to predict the level of thermophilic organism enhancement at any given site. Thus, the impacts are not known and are site specific. Therefore, the magnitude of the potential public health impacts associated with thermal enhancement of *N. fowleri* cannot be determined generically. This is a Category 2 issue.

Noise

- The principal noise sources at power plants (cooling towers and transformers) do not appreciably change during the aging process. Because noise impacts have been found to be small and generally not noticed by the public, noise impacts are expected to be of small significance at all sites. Because noise reduction methods would be costly, and given that there have been few complaints, no additional mitigation measures are warranted for license renewal. This is a Category 1 issue.

Socioeconomics

- The staff examined socioeconomic effects of nuclear power plant operations during a license renewal period. Five of these would be of small significance at all sites: education, public safety, social services, recreation and tourism, and aesthetics. Because mitigation measures beyond those implemented during the current license term are costly

and would offer little benefit, no additional mitigation measures are warranted. These are Category 1 issues. Four of the socioeconomic effects were found to have moderate or large significance at some sites: housing, transportation, public utilities (especially water supply), and off-site land use. These are Category 2 issues. In addition the statutory requirement (National Historic Preservation Act) requires consultation; thus historic and archaeological resources are Category 2 issues.

4.10 Endnotes

[**Prev** | **Next** | **Table of Contents**]

For example, Coleman et al. 1989; Fulton et al. 1980; Savitz et al. 1988; Spitz and Johnson 1985; Tomenius 1986; Wertheimer and Leeper 1979; Wilkins and Koutras 1988; Feychting and Ahlbom 1993; Petridow et al. 1993.
Anthony and Morrison 1985; Beason et al. 1982; Bunyan and Stanley 1983; Campbell et al. 1983; Castrale 1987; Wildlife No. 235; Connor and McMillan 1988; D'Anieri et al. 1987; DeFazio et al. 1988; de Waal Malefyt 1987; Freedman et al. 1988; FWS/OBS-79/22; Gangstad and Hesser 1989; Gangstad and Phillips 1989; Ghassemi and Quinlivan 1982; Hill and Camardese 1986; Hoffman and Albers 1984; Hoffman et al. 1990; Holechek 1981; Hudson et al. 1984; Kennedy and Jordan 1985; Kirkland 1978; Lautenschlager 1986; Linder and Richman 1990; Lochmiller et al. 1991; Mayer 1976; McComb and Rumsey 1982, 1983a, 1983b; Moore 1983; Morrison and Meslow 1984a, 1984b; Newton and Knight 1981; Rands 1986; Risebrough 1986; Roberts and Dorough 1984; Santillo et al., 1989a, 1989b; Savidge 1978; Schulz et al. 1992a, 1992b; Solberg and Higgins 1993; Steele 1984; Sullivan and Sullivan 1981, 1982; Thompson et al. 1991; Voorhees 1984; Walker 1983; Warren et al. 1984; White et al. 1981.
Anthony and Morrison 1985; Beason et al. 1988; Bunyan and Stanley 1983; Lautenschlager 1986; McComb and Rumsey 1983a; Moore 1983; Morrison and Meslow 1984a, 1984b; Rands 1986; Risebrough 1986; Solberg and Higgins 1993.
Anderson 1979; Betsill et al. 1981; Bramwell and Bider 1981; Denoncour and Olson 1984; Eaton and Gates 1981; Everett et al. 1981; Geibert 1980; Kroodsma 1984c; Meyers and Provost 1981; Morhardt et al. 1984; Niemi and Hanowski 1984; Schreiber et al. 1976.
Anderson 1978; Beaulaurier et al. 1984; Brown et al. 1985; Crawford 1981; Faanes 1987; Fredrickson 1983; Howard et al. 1985; Krapu 1974; ORAU-142, 1978c; Malcolm 1982; Mathiasson 1993; Meyer and Lee 1981; Rusz et al. 1986.
Bohm 1988; Bridges and McConnon 1987; Denoncour and Olson 1984; Fitzner 1980; Gilmer and Stewart 1983; Knight and Kawashima 1993; Lee 1990; Paton and Kneedy 1993; Postovit and Postovit 1987; Roppe et al. 1989; Smith 1985; Stahlecker 1978; Steenhof et al. 1993; Williams and Colson 1989.
A discussion of the International System units used in measuring radioactivity and radiation dose is given in Appendix E, Section E.A.3.

4.11 References

[**Prev** | **Next** | **Table of Contents**]

Adey, W. R., and A. F. Lawrence, eds., *Nonlinear Electrodynamics in Biological Systems*, Plenum Press, New York, 1984.

Ahlbom, A., "A Review of the Epidemiologic Literature on Magnetic Fields and Cancer," *Scandinavian Journal Work Environmental Health*, **14**(6), 337-43, 1988.

Aldrich, T. E., and C. E. Easterly, "Electromagnetic Fields and Public Health," *Environmental Health Perspectives*, **75**, 159-71, 1987.

Algers, B., and J. Hultgren, "Effects of Long-Term Exposure to a 400-kV, 50-Hz Transmission Line on Estrous and Fertility in Cows," *Preventive Veterinary Medicine*, **5**, 21-36, 1987.

Alonso, J. C., et al., "Mitigation of Bird Collisions with Transmission Lines Through Groundwire Marking," *Biological Conservation*, **67**(2), 129-34, 1994.

American Cancer Society, *Cancer Facts and Figures--1994*, American Cancer Society, Atlanta, 1994.

Amstutz, H. E., and D. B. Miller, "A Study of Farm Animals near 765-kV Transmission Lines," *Bovine Practitioner*, **15**, 51-62, 1980.

Anderson, S. H., "Changes in Forest Bird Species Composition Caused by Transmission-Line Corridor Cuts," *American Birds*, **33**, 3-6, 1979.

Anderson, W. L., "Waterfowl Collisions with Power Lines at a Coal-Fired Power Plant," *Wildlife Society Bulletin*, **6**, 77 -83, 1978.

ANL/ES-53, J. W. Carson, *Atmospheric Impacts of Evaporative Cooling Systems*, Argonne National Laboratory, Argonne, Illinois, 1976.

Anthony, R. G., and M. L. Morrison, "Influence of Glyphosate Herbicide on Small-Mammal Populations in Western Oregon," *Northwest Science*, **59**, 159-68, 1985.

Armbruster, J. A., and C. L. Mulchi, "Response of Corn and Soybeans to Soil vs. Foliar-Applied Salts of Cooling Tower Origin," *Journal of Environmental Quality*, **13**, 278-82, 1984.

ASTM STP 854, F. L. Harrison, "Effect of Physiochemical Form on Copper Availability to Aquatic Organisms," pp. 469-84 in R. D. Cardwell, et al., eds., *Seventh Symposium on Aquatic Toxicology and Hazard Assessment*, American Society for Testing and Materials, Philadelphia, Pennsylvania, 1985.

Avery, M. L., "Review of Avian Mortality Due to Collisions with Manmade Structures," pp. 3-11 in *Proceedings of the Bird Control Seminar*, Vol. 8, 1981.

Backhaus, A., et al., "Incomplete Collection of Atmospheric Aerosols in the Rainfield of Wet Cooling Towers: Effects on the Methods for the Determination of Drifted Cooling Water," *Physica Scripta*, **37**, 295-98, 1988.

Bankoske, J. W., et al., "The Effects of High-Voltage Electric Fields on the Growth and Development of Plants and Animals," pp. 112-23 in R. E. Tillman, ed., *Proceedings of the First National Symposium on Environmental Concerns in Rights-of-Way Management, January 6-8, 1976*, Mississippi State University, Mississippi State, Mississippi, 1976.

Banks, R. C., *Human-Related Mortality of Birds in the United States*, U.S. Fish and Wildlife Service Special Scientific Report--Wildlife No. 215, Washington, D.C., 1979.

Barfield, K., "NRC Notes Continued Decline in Dose Figures," *Nuclear News* **33**(11), 41-42, September 1990.

Barkley, S. W., and C. Perrin, "The Effects of the Lake Catherine Steam Electric Plant Effluent on the Distribution of Fishes in the Receiving Embayment," pp. 384-92 in *Proceedings of the Twenty-Fifth Annual Conference of the Southeastern Association of Game and Fish Commissioners*, Columbia, South Carolina, 1971.

Barnthouse, L. W., and W. Van Winkle, "Analysis of Impingement Impacts on Hudson River Fish Populations," *American Fisheries Society Monograph*, **4**, 182-90, 1988.

Barnthouse, L. W., et al., "What We Didn't Learn About the Hudson River, Why, and What it Means for Environmental Assessment," *American Fisheries Society Monograph*, **4**, 329-35, 1988.

Beason, S. L., et al., "Vegetation and White-Tailed Deer Responses to Herbicide Treatment of a Mesquite Drainage Habitat Type," *Journal of Range Management*, **35**, 790-94, 1982.

Beaulaurier, D. L., et al., "Mitigating the Incidence of Bird Collisions with Transmission Lines," pp. 539-50 in A. F. Crabtree, ed., *Proceedings of the Third International Symposium on Environmental Concerns in Rights-of-Way Management, San Diego, California, February 15-18, 1982*, Mississippi State University, Mississippi State, Mississippi, 1984.

BEIR-V, *Health Effects of Exposure to Low Levels of Ionizing Radiation*, National Research Council, Advisory Committee on the Biological Effects of Ionizing Radiation, National Academy of Sciences, Washington, D.C., 1990.

Betsill, C. W., et al., "Population Levels of Cottontail Rabbits Along a Power Line Right-of-Way Before and After a Modification of Management Procedures," pp. 56-1 through 56-5 in R. E. Tillman, ed., *Proceedings of the Second Symposium on Environmental Concerns in Rights-of-Way Management, October 16-18, 1979*, Mississippi State University, Mississippi State, Mississippi, 1981.

Bindokas, V. P., et al., "Mechanisms of Biological Effects Observed in Honey Bees (*Apis mellifera, L.*) Hived Under Extra-High-Voltage Transmission Lines: Implications Derived from Bee Exposure to Simulated Intense Electric Fields and Shocks," *Bioelectromagnetics*, **9**(3), 285-301, 1988.

BNWL-1774, G. F. Schiefelbein, *Alternative Electrical Transmission Systems and Their Environmental Impact*, Battelle, Pacific Northwest Laboratories, Richland, Washington, 1977.

Bohm, R. T., "Three Bald Eagle Nests on a Minnesota Transmission Line," *Journal of Raptor Research*, **22**, 34, 1988.

Bracken, T. C., and A. L. Gabriel, *Lyons Ozone Instrumentation Program and Data Analysis*, Laboratory Report No. EL-81-3, Bonneville Power Administration, Portland, Oregon, 1981.

Bramwell, R. N., and J. R. Bider, "A Method for Monitoring the Terrestrial Animal Community of a Power Line Right-of-Way," pp. 45-1 through 45-17 in R. E. Tillman, ed., *Proceedings of the Second Symposium on Environmental Concerns in Rights-of-Way Management, October 16-18, 1979*, Mississippi State University, Mississippi State, Mississippi, 1981.

Bridges, J. M., and D. McConnon, "Use of Raptor Nesting Platforms in a Central North Dakota High Voltage Transmission Line," pp. 46-49 in W. R. Byrnes and H. A. Holt, eds., *Proceedings of the Fourth Symposium on Environmental Concerns in Rights-of-Way Management, Indianapolis, Indiana, October 25-28, 1987*, Purdue University, West Lafayette, Indiana, 1987.

Brown, W. M., et al., "Mortality of Cranes and Waterfowl from Powerline Collisions in the San Luis Valley, Colorado," pp. 128-36 in J. C. Lewis, ed., *Proceedings of the 1985 Crane Workshop*, Platte River Whooping Crane Habitat Maintenance Trust and U.S. Fish and Wildlife Service, Grand Island, Nebraska, 1985.

Bugbee, S. L., "Implementation of Section 316 of the Federal Water Pollution Control Act," pp. 3-5 in L. D. Jensen, ed., *Fourth National Workshop on Entrainment and Impingement, Chicago, Illinois, December 5, 1977*, EA Communications, Inc., Melville, New York, 1978.

Bunyan, P. J., and P. I. Stanley, "The Environmental Cost of Pesticide Usage in the United Kingdom," *Agriculture, Ecosystems and Environment*, **9**, 187-209, 1983.

Byrnes, W. R., and H. A. Holt, eds., *7Proceedings of the Fourth Symposium on Environmental Concerns in Rights-of-Way Management, Indianapolis, Indiana, October 25-28, 1987*, Purdue University, West Lafayette, Indiana, 1987.

Byus, C. V., et al., "The Effects of Low-Energy 60-Hz Environmental Electromagnetic Field upon the Growth-Related Enzyme Ornithine Decarboxylase," *Carcinogenesis*, **8**, 1385-89, 1987.

Cain, C. D., et al., *Effects of 60-Hz Fields on Ornithine Decarboxylase Activity in Bone Cells and Fibroblasts*, Technical Report, Contractors' Review Meeting, U.S. Department of Energy, Office of Energy Storage and Distribution and the Electric Power Research Institute Health Studies Program, New York State Department of Health, Denver, Colorado, November 1986.

Campbell, K. L., et al., *Acceptance by Black-Tailed Deer of Foliage Treated with Herbicides*, U.S. Forestry Service Research Paper PNW-290, 1983.

Carpenter, D. O., and S. Ayraptyan, *Biological Effects of Electric and Magnetic Fields*, Vols. 1-2, Academic Press, San Diego, California, 1994.

Carr, J. E., et al., *National Water Summary, 1987: Hydrologic Events and Water Supply and Use*, U.S. Geological Survey Water Supply Paper 2350, U.S. Geological Survey, Denver, 1990.

Castrale, J. S., "Pesticide Use in No-Till Row-Crop Fields Relative to Wildlife," *Indiana Academy of Science*, **96**, 215-22, 1987.

Cavanagh, J. B., et al., "Wildlife Use and Management of Power Line Rights-of-Way in New Hampshire," pp. 276-85 in R. E. Tillman, ed., *Proceedings of the First National Symposium on Environmental Concerns in Rights-of-Way Management, January 6-8, 1976*, Mississippi State University, Mississippi State, Mississippi, 1976.

Chapelle, F. H., and D. D. Drummond, *Hydrogeology, Digital Simulation, and Geochemistry of the Aqura and Piney Point Nanjemoy Aquifer System in Southern Maryland*, Report of Investigation No. 38, Maryland Geological Survey, Department of Natural Resources, Baltimore, Maryland, 1983.

Chasko, G. G., and J. E. Gates, "Avian Breeding Success in Relation to Grassland and Shrubland Habitats Within a 138 -kV Transmission-Line Corridor," pp. 68-1 through 68-12 in R. E. Tillman, ed., *Proceedings of the Second Symposium on Environmental Concerns in Rights-of-Way Management, October 16-18, 1979*, Mississippi State University, Mississippi State, Mississippi, 1981.

Chasko, G. G., and J. E. Gates, "Avian Habitat Suitability Along a Transmission-Line Corridor in an Oak-Hickory Forest Region," *Wildlife Monographs*, **82**, 1982.

Chiabrera, A., et al., eds., *Interactions Between Electromagnetic Fields and Cells*, Plenum Press, New York, 1985.

Chizmadia, P. A., M. J. Kennish, and V. L. Ohori, "Physical Description of Barnegat Bay," pp. 1-28 in M. J. Kennish and R. A. Lutz, eds., *Ecology of Barnegat Bay, New Jersey*, Springer-Verlag, New York, 1984.

Coleman, M., and V. Beral, "A Review of Epidemiologic Studies of the Health Effects of Living Near or Working with Electricity Generation and Transmission Equipment," *International Journal of Epidemiology*, **17**, 1-13, 1988.

Coleman, M. P., et al., "Leukaemia and Residence near Electricity Transmission Equipment: A Case-Control Study," *British Journal Cancer*, **60**, 793-98, 1989.

CONF-730505, G. P. Romberg et al., "Fish Behavior at a Thermal Discharge into Lake Michigan," pp. 296-312 in J. W. Gibbons and R. R. Sharitz, eds., *Thermal Ecology*, National Technical Information Service, Springfield, Virginia, 1974.

CONF-740302, J. C. DeVine, "The Forked River Program: A Case Study in Saltwater Cooling," pp. 509-57, in *Cooling Tower Environment--1974*, ERDA Symposium Series, 1975a.

CONF-740302, B. C. Moser, "Airborne Sea Salt: Techniques for Experimentation," in *Cooling Tower Environment--1974*, ERDA Symposium Series, 1975b.

CONF-740302, A. Roffman, "Environmental, Economic, and Social Considerations in Selecting a Cooling System for a Steam Electric Generating Plant," pp. 1-23, in *Cooling Tower Environment--1974*, ERDA Symposium Series, 1975c.

CONF-740302, F. G. Taylor et al., "Environmental Effects of Chromium and Zinc in Cooling-Water Drift," in *Cooling Tower Environment--1974*, ERDA Symposium Series, 1975d.

CONF-750425, R. G. Otto, "Thermal Effluents, Fish, and Gas-Bubble Disease in Southwestern Lake Michigan," pp. 121-29 in G. W. Esch and R. W. McFarlane, eds., *Thermal Ecology II*, National Technical Information Service, Springfield, Virginia, 1976.

Connor, J., and L. McMillan, "Winter Utilization by Moose of Glyphosate Treated Cutovers--An Interim Report," *Alces*, **24**, 133-42, 1988.

Conservation Foundation, *State of the Environment: An Assessment at Mid-Decade*, Washington, D.C., 1984.

Council on Environmental Quality, *The Seventh Annual Report of the Council on Environmental Quality*, September 1976.

Coutant, C. C., "Cold Shock to Aquatic Organisms: Guidance for Power Plant Siting, Design, and Operation," *Nuclear Safety*, **18**(3), 329-42, 1977.

Coutant, C. C., *A Critical Review of Aquatic Ecological Effects of Power Plant Cooling*, U.S. Department of Energy, Office of Health and Environmental Research, Washington, D.C., 1981.

Coutant, C. C., "Thermal Preference: When Does an Asset Become a Liability?" *Environmental Biology of Fishes*, **18** (3), 161-72, 1987.

Crawford, R. L., "Weather, Migration and Autumn Bird Kills at a North Florida TV Tower," *Wilson Bulletin*, **93**, 189-95, 1981.

Crivelli, A. J., et al., "Electric Power Lines: A Cause of Mortality in Pelecanus Crispus Bruch, a World Endangered Bird Species, in Porto-Lago, Greece," *Colonial Waterbirds*, **11**, 301-05, 1988.

D'Anieri, et al., "Small Mammals in Glyphosate-Treated Clearcuts in Northern Maine," *Canadian Field Naturalist*, **10**, 547-50, 1987.

DeAngelis, D. L., L. W. Barnthouse, W. Van Winkle, and R. G. Otto, "A Critical Review of Population Approaches in Assessing Fish Community Health," *Journal of Great Lakes Research*, **16**(4) 576-90, 1990.

DeFazio, J. T., Jr., et al., "Effects of Tebuthiuron Site Preparation on White-Tailed Deer Habitat," *Wildlife Society Bulletin*, **16**, 12-18, 1988.

DeMont, D. J., and R. W. Miller, "First Reported Incidence of Gas-Bubble Disease in the Heated Effluent of a Steam Generating Station," pp. 392-99 in *Proceedings of the Twenty-Fifth Annual Conference of the Southeastern Association of Game and Fish Commissioners*, Columbia, South Carolina, 1971.

Denoncour, J. E., and D. P. Olson, "Raptor Utilization of Power Line Rights-of-Way in New Hampshire," pp. 527-38 in A. F. Crabtree, ed., *Proceedings of the Third International Symposium on Environmental Concerns in Rights-of-Way*

Management, San Diego, California, February 15-18, 1982, Mississippi State University, Mississippi State, Mississippi, 1984.

de Waal Malefyt, J. J., "Effect of Vegetation Management on Bird Populations Along Electric Transmission Rights-of-Way," pp. 570-80 in A. F. Crabtree, ed., *Proceedings of the Third International Symposium on Environmental Concerns in Rights-of-Way Management, San Diego, California, February 15-18, 1982*, Mississippi State University, Mississippi State, Mississippi, 1984.

de Waal Malefyt, J. J., "Effects of Herbicide Spraying on Breeding Songbird Habitat Along Electric Transmission Rights-of-Way," pp. 28-33 in W. R. Byrnes and H. A. Holt, eds., *Proceedings of the Fourth Symposium on Environmental Concerns in Rights-of-Way Management, Indianapolis, Indiana, October 25-28, 1987*, Purdue University, West Lafayette, Indiana, 1987.

DOE/BP-945, J. M. Lee et al., *Electrical and Biological Effects of Transmission Lines: A Review*, U.S. Department of Energy, Bonneville Power Administration, Portland, Oregon, 1989.

DOE/BP-1136, J. E. Canfield, *Impact Mitigation and Monitoring of the BPA 500-kV Garrison-Taft Transmission Line--Effects on Elk Security and Hunter Opportunity: Final Report prepared for Bonneville Power Administration*, Montana Department of Fish, Wildlife and Parks, Helena, Montana, 1988.

DOE/ER-0317, F. L. Harrison et al., "Distribution, Fate, and Effects of Energy-Related Residuals in Marine Environments," pp. 251-58 in J. V. Dorigan and F. L. Harrison, eds., *Physiological Responses of Marine Organisms to Environmental Stresses*, U.S. Department of Energy, Washington, D.C., 1987.

Doucet, G. J., et al., "White-Tailed Deer Response to Conifer Plantation as a Mitigation Measure in a Power Line Right-of-Way Located in a Quebec Deer Yard," *Transactions of the Northeast Section of the Wildlife Society*, **40**, 150-56, 1983.

Doucet, G. J., et al., "Deer Behavior in a Power Line Right-of-Way Located in a Northern Wintering Yard," pp. 7-12 in W. R. Byrnes and H. A. Holt, eds., *Proceedings of the Fourth Symposium on Environmental Concerns in Rights-of-Way Management, Indianapolis, Indiana, October 25-28, 1987*, Purdue University, West Lafayette, Indiana, 1987.

Dudney, C. S., et al., "Radon-222, ^{222}Rn Progeny, and ^{220}Rn Progeny Levels in 70 Houses," *Health Physics*, **58**(3), 297-311, 1990.

DUKE PWR/82-02, J. E. Hogan, and W. D. Adair, eds., *Lake Norman Summary*, Vols. 1 and 2, Technical Report, Duke Power Company, Production Environmental Services, Huntersville, North Carolina, 1982.

Duke Power Company, *McGuire Nuclear Station, Summary of Ecological Impacts, and Plan of Continuing Study: Supporting Documentation for Modification of NPDES Permit No. NC0024392*, Charlotte, North Carolina, 1988.

Easterly, C. E., "Cancer Link to Magnetic Fields: A Hypothesis," *American Journal of Epidemiology*, **114**(2), 169-73, 1981.

Eaton, R. H., and J. E. Gates, "Transmission-Line Rights-of-Way Management and White-Tailed Deer Habitat: A Review," pp. 58-1 through 58-7 in R. E. Tillman, ed., *Proceedings of the Second Symposium on Environmental Concerns in Rights-of-Way Management, October 16-18, 1979*, Mississippi State University, Mississippi State, Mississippi, 1981.

EPA-440/5-86-001, *Quality Criteria for Water*, U.S. Environmental Protection Agency, Office of Water Regulations and Standards, 1986.

EPA-600/3-76-078, I. J. Hindawi, L. C. Raniere, and J. A. Rea, *Ecological Effects of Aerosol Drift from a Saltwater Cooling System*, U.S. Environmental Protection Agency, 1976.

EPA/600/6-90/005A, *Evaluation of the Potential Carcinogenicity of Electromagnetic Fields*, Workshop Review Draft, U.S. Environmental Protection Agency, June, 1990.

EPRI EA-1038, *Ecosystem Effects on Phytoplankton and Zooplankton Entrainment*, prepared by Lawler, Matusky and Skelly Engineers, for Electric Power Research Institute, Palo Alto, California, 1979.

EPRI EA-1054, C. D. Becker et al., *Synthesis and Analysis of Ecological Information from Cooling Impoundments*, Vol. 1, Electric Power Research Institute, Palo Alto, California, 1979.

EPRI EA-1148, R. W. Larimore, and J. M. McNurney, "Evaluation of a Cooling Lake Fishery," *Introduction, Water Quality, and Summary*, Vol. 1, Electric Power Research Institute, Palo Alto, California, 1980.

EPRI EA-4017, R. L. Tyndall et al., *Legionnaires' Disease Bacteria in Power Plant Cooling Systems: Phase II Final Report*, Electric Power Research Institute, Palo Alto, California, 1985.

EPRI EA-4218, B. Greenberg, et al., *Extra-High Voltage Transmission Lines: Mechanisms of Biological Effects on Honeybees*, prepared for Electric Power Research Institute, Palo Alto, California, 1985.

EPRI WS-78-141, J. A. Henderson and W. S. Scott, "The Economic Impact of High-Voltage Transmission Towers on Agricultural Lands," pp. 11-1 through 11-12 in D. Arner and R. E. Tillman, eds., *Proceedings of the Second Symposium on Environmental Concerns in Rights-of-Way Management, October 16-18, 1979*, Electric Power Research Institute, Palo Alto, California, 1981a.

EPRI WS-78-141, J. J. de Waal Malefyt, "Farms and Wires," pp. 12-1 through 12-14 in D. Arner and R. E. Tillman, eds., *Proceedings of the Second Symposium on Environmental Concerns in Rights-of-Way Management, October 16-18, 1979*, Electric Power Research Institute, Palo Alto, California, 1981b.

Evans, M. S., et al., "Effects of the Donald C. Cook Nuclear Power Plant on Zooplankton of Southeastern Lake Michigan," pp. 125-39 in L. D. Jensen, ed., *Fourth National Workshop on Entrainment and Impingement, Chicago, Illinois, December 5, 1977*, EA Communications, Inc., Melville, New York, 1977.

Evans, M. S., "Benthic and Epibenthic (*Microcrustaceans, Macrobenthos*) Community Structure in the Vicinity of a Power Plant, Southeastern Lake Michigan," *Verhandlungen Internationale Vereinigung Limnologie*, **22**, 488-94, 1984.

Everett, D. D., et al., "Use of Rights-of-Way by Nesting Wild Turkeys in North Alabama," pp. 64-1 through 64-6 in R. E. Tillman, ed., *Proceedings of the Second Symposium on Environmental Concerns in Rights-of-Way Management, October 16-18, 1979*, Mississippi State University, Mississippi State, Mississippi, 1981.

Faanes, C. A., *Bird Behavior and Mortality in Relation to Power Lines in Prairie Habitats*, Fish and Wildlife Technical Report 7, U.S. Fish and Wildlife Service, 1987.

Feychting, M., and A. Ahlbom, "Magnetic Fields and Cancer in Children Residing near Swedish High-Voltage Power Lines," *American Journal of Epidemiology*, **138**, 467-481 (1993).

FICN (Federal Interagency Committee on Noise). "Federal Agency Review of Selected Airport Noise Analysis Issues", 1992.

Fitzner, R. E., "Impacts of a Nuclear Energy Facility on Raptorial Birds," pp. 9-33 in R. P. Howard and J. F. Gore, eds., *Proceedings of the Workshop on Raptors and Energy Developments, Boise, Idaho, January 25-26, 1980*, Bonneville

Power Administration, U.S. Fish and Wildlife Service, Idaho Power Company, and the Idaho Chapter of the Wildlife Society, 1980.

FPC (Florida Power Corporation), *Final Report--Crystal River*, 316 Studies, January 15, 1985.

Fredrickson, L. H., "Bird Response to Transmission Lines at a Mississippi River Crossing," *Missouri Academy of Science Transactions*, **17**, 129-40, 1983.

Freedman, B., et al., "Effects of the Herbicide 2,4,5-T on the Habitat and Abundance of Breeding Birds and Small Mammals of a Conifer Clearcut in Nova Scotia," *Canadian Field-Naturalist*, **102**, 6-11, 1988.

Fulton, J. P. et al., "Electrical Wiring Configuration and Childhood Leukemia in Rhode Island," *American Journal of Epidemiology*, **111**, 292-96, 1980.

FWS/OBS-79/22, *Management of Transmission Line Rights-of-Way for Fish and Wildlife*, Vol. 1, U.S. Fish and Wildlife Service, 1979.

Gangstad, E. O., ed., *Woody Brush Control*, CRC Press, Boca Raton, Florida, 1989.

Gangstad, E. O., and E. F. Hesser, "Federal Regulation for Rights-of-Way Herbicide Application," pp. 3-15 in E. O. Gangstad, ed., *Woody Brush Control*, CRC Press, Boca Raton, Florida, 1989.

Gangstad, E. O., and P. Phillips, "Practical Management for Rights-of-Way Herbicide Application," pp. 31-43 in E. O. Gangstad, ed., *Woody Brush Control*, CRC Press, Boca Raton, Florida, 1989.

GAO/RCED-90-151, *Nuclear Science--U.S. Electricity Needs and DOE's Civilian Reactor Development Program*, U.S. General Accounting Office, 1990.

Geibert, E. H., "Songbird Diversity Along an Urban Power Line Right-of-Way in Rhode Island," *Environmental Management*, **4**, 205-13, 1980.

Geo-Marine, Inc., *The Distribution of Temperature and Dissolved Oxygen in the Vicinity of Arkansas Nuclear One: Final Report*, Vol. 1, prepared for Arkansas Power and Light Company, 1976.

Ghassemi, M., and S. Quinlivan, "Environmental Effects of New Herbicides for Vegetation Control in Forestry," *Environment International*, **7**, 389-401, 1982.

Gilmer, D. S., and R. E. Stewart, "Ferruginous Hawk Populations and Habitat Use in North Dakota," *Journal of Wildlife Management*, **47**, 146-57, 1983.

Giusti, E. V., and E. L. Meyer, *Water Consumption by Nuclear Powerplants and Some Hydrological Implications*, U.S. Geological Survey Circular 745, U.S. Geological Survey, Arlington, Virginia, 1978.

GJO-100(8-78), *Statistical Data of the Uranium Industry*, U.S. Department of Energy, Washington, D.C., January 1, 1978.

Golay, M. W., et al., "Comparison of Methods for Measurement of Cooling Tower Drift," *Atmospheric Environment*, **20**, 269-91, 1986.

Goodman, R., and A. S. Henderson, "Sine Waves Enhance Cellular Transcription," *Bioelectromagnetics*, **7**(1), 23-29, 1986.

Goodman, R., and A. S. Henderson, "Exposure of Salivary Gland Cells to Low-Frequency Electromagnetic Fields Alters Polypeptide Synthesis," *Proceedings of the National Academy Science*, **85**, 3928-32, 1988.

Goodman, R., et al., "Transcriptional Patterns in the X Chromosome of *Sciara coprophilia* Following Exposure to Magnetic Fields," *Bioelectromagnetics*, **8**(1), 1-7, 1987.

Goodman, R., et al., "Pulsing Electromagnetic Fields Induce Cellular Transcription," *Science*, **220**, 1283-85, 1983.

Gotchy, R., testimony, from NRC (U.S. Regulatory Commission) Docket No. 50-488, *In the Matter of Duke Power Company (Perkins Nuclear Station)*, filed April 17, 1978.

Grattan, S. R., et al., "Foliar Uptake and Injury from Saline Aerosol," *Journal of Environmental Quality*, **10**, 406-09, 1981.

Greeson, P. E., et al., *Wetland Functions and Values: The State of Our Understanding*, American Water Resources Association, Minneapolis, Minnesota, 1979.

Grumstrup, P. D., et al., "Aerial Photographic Assessment of Transmission Line Structure Impact on Agricultural Crop Production," *Photogrammetric Engineering and Remote Sensing*, **48**, 1313-17, 1982.

Hallenbeck, W. H., and G. R. Brenniman, "Risk of Fatal Amebic Meningoencephalitis from Waterborne *Naegleria fowleri," Environmental Management*, **13**(2), 227-32, 1989.

Halliburton NUS Environmental Corporation, *Annual Report for PVNGS Salt Deposition Monitoring Program, January-December 1991*, Gaithersburg, Maryland, 1992.

Haman, K. E., and S. P. Malinowski, "Observations of Cooling Tower and Stack Plumes and Their Comparison with Plume Model ALINA," *Atmospheric Environment*, **23**, 1223-34, 1989.

Hartley, D. R., et al., "A Comparison of Right-of-Way Maintenance Treatments and Use by Wildlife," pp. 623-78 in A. F. Crabtree, ed., *Proceedings of the Third International Symposium on Environmental Concerns in Rights-of-Way Management, San Diego, California, February 15-18, 1982*, Mississippi State University, Mississippi State, Mississippi, 1984.

Helvey, M., "Behavioral Factors Influencing Fish Entrapment at Offshore Cooling-Water Intake Structures in Southern California," *Marine Fisheries Review*, **47**(1), 18-26, 1985.

Hengeveld, H. G., "Global Climate Change: Implications for Air Temperature and Water Supply in Canada," *Transactions of the American Fisheries Society*, **119**(2), 176-82, 1990.

Hesse, L. W., et al., *The Middle Missouri River--A Collection of Papers on the Biology with Special Reference to Power Station Effects*, The Missouri River Study Group, Norfolk, Nebraska, 1982.

Hill, E. F., and M. B. Camardese, *Lethal Dietary Toxicities of Environmental Contaminants and Pesticides to Coturnix*, Fish and Wildlife Technical Report 2, U.S. Fish and Wildlife Service, 1986.

Hoffman, D. J., and P. H. Albers, "Evaluation of Potential Embryotoxicity and Teratogenicity of 42 Herbicides, Insecticides, and Petroleum Contaminants to Mallard Eggs," *Archives of Environmental Contaminant Toxicology*, **13**, 15-27, 1984.

Hoffman, D. J., et al., "Wildlife Toxicology," *Environmental Science Technology*, **24**, 276-83, 1990.

Hoffman, W. C., et al., "Response of Cotton, Alfalfa, and Canteloupe to Foliar-Deposited Salt in an Arid Environment," *Journal of Environmental Quality*, **16**, 267-72, 1987.

Holechek, J. L., "Brush Control Impacts on Rangeland Wildlife," *Journal of Soil and Water Conservation*, 265-69, September-October 1981.

Hosker, R. P., and S. E. Lindberg, "Review: Atmospheric Deposition and Plant Assimilation of Gases and Particles," *Atmospheric Environment*, **16**, 889-910, 1982.

Howard, R. P., et al., "Impacts of the Tincup Loop Transmission Line on Cranes in Caribou County, Idaho," pp. 140-44 in J. C. Lewis, ed., *Proceedings of the 1985 Crane Workshop*, Platte River Whooping Crane Habitat Maintenance Trust and U.S. Fish and Wildlife Service, Grand Island, Nebraska, 1985.

Hudson, R. H., et al., *Handbook of Toxicity of Pesticides to Wildlife*, Resource Publication 153, 2nd ed., U.S. Fish and Wildlife Service, 1984.

Hutchinson, J. B., Jr., "Technical Descriptions of Hudson River Electricity Generating Stations," *American Fisheries Society Monograph*, **4**, 113-20, 1988.

Hynes, H. B. N., *The Ecology of Running Waters*, University of Toronto Press, Toronto, Ontario, 1970.

ICRP 60 (International Commission on Radiological Protection), ICRP Publication 60, *1990 Recommendations of the International Commission on Radiological Protection*, Pergamon Press, Oxford, 1991.

ICRP 87 (International Commission on Radiological Protection), ICRP Publication 50, *Lung Cancer Risk from Outdoor Exposures to Radon Daughters*, Pergamon Press, Oxford, 1987.

IRPA/INIRC Guidelines, "Interim Guidelines on Limits of Exposure to 50/60 Hz Electric and Magnetic Fields," *Health Physics*, **58**(1), 113-22, 1990.

Jackson, L. W., "Minimizing Impact of Electric and Gas Transmission Lines on Deer Winter Habitat," *Transactions of the Northeast Section of the Wildlife Society*, **37**, 78-89, 1980.

Janes, D. E., *Evaluation of Health and Environmental Effects of Extra-High-Voltage (EHV) Transmission*, U.S. Environmental Protection Agency, Office of Radiation Programs, 1980.

Jensen, A. L., et al., "Use of Conventional Fishery Models to Assess Entrainment and Impingement of Three Lake Michigan Fish Species," *Transactions of the American Fisheries Society*, **111**, 21-34, 1982.

Jensen, L. D., ed., *Fourth National Workshop on Entrainment and Impingement, Chicago, Illinois, December 5, 1977*, EA Communications, Melville, New York, 1978.

Jensen, L. D., ed., "Issues Associated with Impact Assessment," *Proceedings of the Fifth National Workshop on Entrainment and Impingement*, EA Communications, Melville, New York, 1981.

Jones & Jones, *Visual Impact Study: Statement of Findings, Alternative Closed-Cycle Systems, Indian Point Nuclear Generating Plant*, prepared for U.S. Nuclear Regulatory Commission (USNRC), Seattle, November 1975.

Kelso, J. R. M., and G. S. Milburn, "Entrainment and Impingement of Fish by Power Plants in the Great Lakes Which Use the Once-Through Cooling Process," *Journal of Great Lakes Research*, **5**, 182-94, 1979.

Kelso, J. R. M., and G. S. Milburn, "Response to Comment by J. Scott-Wasilk et al.," *Journal of Great Lakes Research*, **7**, 495-97, 1981.

Kennedy, E. R., and P. A. Jordan, "Glyphosate and 2,4-D: The Impacts of Two Herbicides on Moose Browse in Forest Plantations," *Alces*, **21**, 149-60, 1985.

Kennish, M. J., et al., "Anthropogenic Effects on Aquatic Communities," pp. 318-38 in M. J. Kennish and R. A. Lutz, eds., *Ecology of Barnegat Bay, New Jersey*, Springer-Verlag, New York, 1984.

Kirkland, G. L., "Population and Community Responses of Small Mammals to 2,4,5-T," *USDA Forest Service Research Note*, PNW-314, Pacific Northwest Forest and Range Experiment Station, 1978.

Klauda, R. J., et al., "What We Learned About the Hudson River: Journey Toward an Elusive Destination," *American Fisheries Society Monograph*, **4**, 316-28, 1988.

Kmiec, G., "Effect of Cooling Towers on the Meteorological Situation in the Immediate Vicinity and on the Chemical Composition of Atmospheric Precipitation," *Environment Protection Engineering*, **10**, 31-38, 1984.

Knight, R. L., and J. Y. Kawashima, "Responses of Raven and Red-tailed Hawk Populations to Linear Right-of-Ways," *Journal of Wildlife Management*, **57**(2), 266-70, 1993.

Krapu, G. L., "Avian Mortality from Collisions with Overhead Wires in North Dakota," *Prairie Naturalist*, **6**, 1-6, 1974.

Krenkel, P. A., and F. L. Parker, *Biological Aspects of Thermal Pollution*, Vanderbilt University Press, Nashville, Tennessee, 1969.

Kroodsma, R. L., "Bird Community Ecology on Power-Line Corridors in East Tennessee," *Biological Conservation*, **23**, 79-94, 1982.

Kroodsma, R. L., "Ecological Factors Associated with Degree of Edge Effect in Breeding Birds," *Journal of Wildlife Management*, **48**, 418-25, 1984a.

Kroodsma, R. L., "Effect of Edge on Breeding Forest Bird Species," *Wilson Bulletin*, **96**, 426-36, 1984b.

Kroodsma, R. L., "Effects of Power-Line Corridors on the Density and Diversity of Bird Communities in Forested Areas," pp. 551-61 in A. F. Crabtree, ed., *Proceedings of the Third International Symposium on Environmental Concerns in Rights-of-Way Management, San Diego, California, February 15-18, 1982*, Mississippi State University, Mississippi State, Mississippi, 1984c.

Kroodsma, R. L., "Edge Effect on Breeding Birds Along Power-Line Corridors in East Tennessee," *American Midland Naturalist*, **118**, 275-83, 1987.

Langford, T. E., *Electricity Generation and the Ecology of Natural Waters*, Liverpool University Press, Liverpool, England, 1983.

Larkin, R. P., "Why Are Migrating Birds Killed at Tall Structures?" *Illinois Audubon*, **226**, 20-21, 1988.

LaTour, J. K., "Illinois Water Supply and Use," pp. 235-42 in J. E. Carr et al., *National Water Summary 1987: Hydrologic Events and Water Supply and Use*, U.S. Geological Survey Water Supply Paper 2350, U.S. Geological Survey, Denver, 1990.

Lautenschlager, R. A., "Forestry, Herbicides, and Wildlife," *Maine Agricultural Experiment Station Miscellaneous Publications*, **689**, 299-307, 1986.

Lauver, T. L., et al., "Effects of Saline Cooling Tower Drift on Seasonal Variations of Sodium and Chloride Concentrations in Native Perennial Vegetation," PPSP-CPCTP-22, WRRC Special Report No. 9, pp. I, 49-63 in *Cooling Tower Environment--1978 Proceedings*, 1978.

Lee, G. F., and P. H. Martin, "Dissolved Gas Supersaturation and Dilution in Thermal Plumes from Steam Electric Generating Stations," *Water Research*, **9**, 643-48, 1975.

Lee, J. M., Jr., "Raptors and the BPA Transmission System," pp. 41-55 in R. P. Howard and J. F. Gore, eds., *Proceedings of the Workshop on Raptors and Energy Developments, Boise, Idaho, January 25-26, 1980*, Bonneville Power Administration, U.S. Fish and Wildlife Service, Idaho Power Company, and the Idaho Chapter of the Wildlife Society, 1980.

Lee, J. M. Jr., et al., "Environmental Impact Considerations for Future A.C. Transmission Lines of 1000-kV and Above," pp. 660-69 in A. F. Crabtree, ed., *Proceedings of the Third International Symposium on Environmental Concerns in Rights-of-Way Management, February 15-18, 1982,* San Diego, California, Mississippi State University, Mississippi State, Mississippi, 1984.

Lewis, R. E., "Opportunity for Management of Natural Resources Through Utility and Regulatory Cooperation," paper presented at the 120th Annual Meeting of the American Fisheries Society, Pittsburgh, Pennsylvania, 1990.

Linder, G., and M. E. Richmond, "Feed Aversion in Small Mammals as a Potential Source of Hazard Reduction for Environmental Chemicals: Agrichemical Case Studies," *Environmental Toxicology and Chemistry*, **9**, 95-105, 1990.

Loar, J. M., et al., "An Analysis of Factors Influencing the Impingement of Threadfin Shad at Power Plants in the Southeastern U.S.," pp. 245-55 in L. D. Jensen, ed., *Fourth National Workshop on Entrainment and Impingement, Chicago, Illinois, December 5, 1977*, EA Communications, Melville, New York, 1978.

Lochmiller, R. L., et al., "Response of Cottontail Rabbit Populations to Herbicide and Fire Applications on Cross Timbers Rangeland," *Journal of Range Management*, **44**(2), 150-55, 1991.

Loft, E. R., and J. W. Menke, "Deer Use and Habitat Characteristics of Transmission-Line Corridors in a Douglas-Fir Forest," *Journal of Wildlife Management*, **48**, 1311-16, 1984.

Luken, J. O., et al., "Assessment of Frequent Cutting as a Plant-Community Management Technique in Power-Line Corridors," *Environmental Management*, **15**(3), 381-89, 1991.

Luken, J. O., et al., "Target and Nontarget Discrimination of Herbicides Applied to Vegetation in a Power-Line Corridor," *Environmental Management*, **18**(2), 251-55, 1994.

Maas, E. V., "Crop Tolerance to Saline Sprinkling Water," *Plant and Soil*, **89**, 273-84, 1985.

Madenjian, C. P., et al., "Intervention Analysis of Power Plant Impact on Fish Populations," *Canadian Journal of Fisheries and Aquatic Sciences*, **43**, 819-29, 1986.

Maehr, D. S., et al., "Bird Casualties at a Central Florida Power Plant," *Florida Field Naturalist*, **11**, 45-49, 1983.

Magno, P., testimony from NRC (U.S. Nuclear Regulatory Commission) Docket No. 50-488, *In the Matter of Duke Power Company (Perkins Nuclear Station)*, filed April 17, 1978.

Malcolm, J. M., "Bird Collisions with a Power Transmission Line and Their Relation to Botulism at a Montana Wetland," *Wildlife Society Bulletin*, **10**, 297-304, 1982.

Marella, R. L., *Water Withdrawals, Use, and Trends in Florida, 1985*, U.S. Geological Survey Water-Resources Investigations Report 88-4103, Tallahassee, Florida, 1988.

Marino, A. A., et al., "Weak Electric Fields Affect Plant Development," *IEEE Transactions on Biomedical Engineering*, **BME30**(12), 833-34, 1983.

Marsden, J. E., et al., "Effect of Nuclear Power Plant Lights on Migrants," *J. Field Ornith*, **51**, 315-18, 1980.

Martin, M., et al., "Copper Toxicity Experiments in Relation to Abalone Deaths Observed in a Power Plant's Cooling Waters," *California Fish and Game*, **63**(2), 95-100, 1977.

Mathiasson, S., "Mute Swans, *Cygnus olor*, Killed from Collision with Electrical Wires: A Study of Two Situations in Sweden," *Environmental Pollution*, **80**(3), 239-47, 1993.

Mayer, T. D., "An Evaluation of Chemically Sprayed Electric Transmission Line Rights-of-Way for Actual and Potential Wildlife Use," pp. 288-94 in R. Tillman, ed., *Proceedings of the First National Symposium on Environmental Concerns in Rights-of-Way Management, January 6-8, 1976*, Mississippi State University, Mississippi State, Mississippi, 1976.

McBrayer, J. F., and K. M. Oakes, "Impacts of Evaporative Cooling Towers in Arid Environments," *Journal of Arid Environments*, **5**, 385-98, 1982.

McComb, W. C., and R. L. Rumsey, "Response of Small Mammals to Forest Clearings Created by Herbicides in the Central Appalachians," *Brimleyana*, **8**, 121-34, 1982.

McComb, W. C., and R. L. Rumsey, "Bird Density and Habitat Use in Forest Openings Created by Herbicides and Clearcutting in the Central Appalachians," *Brimleyana*, **9**, 83-95, 1983a.

McComb, W. C., and R. L. Rumsey, "Characteristics and Cavity-Nesting Bird Use of Picloram-Created Snags in the Central Appalachians," *Southern Journal of Applied Forestry*, **7**, 34-37, 1983b.

McCune, D. C., et al., "Studies on the Effects of Saline Aerosols of Cooling Tower Origin on Plants," *Journal of the Air Pollution Control Association*, **27**, 319-24, 1977.

McInerny, M. C., "Gas-Bubble Disease in Three Fish Species Inhabiting the Heated Discharge of a Steam-Electric Station Using Hypolimnetic Cooling Water," *Water, Air, and Soil Pollution*, **49**, 7-15, 1990.

MDNR (Maryland Department of Natural Resources), *Power Plant Cumulative Environmental Impact Report for Maryland*, PPRP-CEIR-6, Power Plant Research Program, Maryland Department of Natural Resources, Annapolis, Maryland, 1988.

Merriman, D., and L. M. Thorpe, "The Connecticut River Ecological Study: Impact of a Nuclear Power Plant," *American Fisheries Society Monograph No. 1*, American Fisheries Society, Bethesda, Maryland, 1976.

Meyer, J. R., and J. M. Lee, Jr., "Effects of Transmission Lines on Flight Behavior of Waterfowl and Other Birds," pp. 62-1 through 62-15 in D. Arner and R. E. Tillman, ed., *Proceedings of Second Symposium Environmental Concerns in Rights-of-Way Management, October 16-18, 1979*, Mississippi State University, Mississippi State, Mississippi, 1981.

Meyers, J. M., and E. E. Provost, "Bird Population Responses to a Forest-Grassland and Shrub Ecotone on a Transmission Line Corridor," pp. 60-1 through 60-14 in R. E. Tillman, ed., *Proceedings of the Second Symposium on Environmental Concerns in Rights-of-Way Management, October 16-18, 1979*, Mississippi State University, Mississippi State, Mississippi, 1981.

Miller, M. W., "Biological Effects from Exposure to Transmission Line Electromagnetic Fields," *International Right of Way Association*, **30**(3), 8-15, 1983.

Minnesota Department of Public Service, "Comments and Recommendations of the Minnesota Agencies Pursuant to Proposed Rule 10 CFR Part 51, Environmental Review for Renewal of Operating Licenses, and the Draft Generic Environmental Impact Statement NUREG-1437," St. Paul, Minnesota, 1992.

Minnesota Environmental Quality Board, *Final Environmental Impact Statement: Prairie Island Independent Spent Fuel Storage Installation*, St. Paul, Minnesota, 1991.

Moore, N. W., "Ecological Effects of Pesticides," pp. 159-75 in A. Warren and F. B. Goldsmith, eds., *Conservation in Perspective*, John Wiley & Sons, New York, 1983.

Morhardt, J. E., et al., "Comparative Use of Transmission Line Corridors and Parallel Study Corridors by Mule Deer in the Sierra Nevada Mountains of Central California," pp. 614-22 in A. F. Crabtree, ed., *Proceedings of the Third International Symposium on Environmental Concerns in Rights-of-Way Management, San Diego, California, February 15-18, 1982*, Mississippi State University, Mississippi State, Mississippi, 1984.

Morkill, A. E., and S. H. Anderson, "Effectiveness of Marking Powerlines to Reduce Sandhill Crane Collisions," *Wildlife Society Bulletin*, **19**(4), 442-49, 1991.

Morrison, M. L., and E. C. Meslow, "Effects of the Herbicide Glyphosate on Bird Community Structure, Western Oregon," *Forest Science*, **30**, 95-106, 1984a.

Morrison, M. L., and E. C. Meslow, "Response of Avian Communities to Herbicide-Induced Vegetation Changes," *Journal of Wildlife Management*, **48**(1), 14-22, 1984b.

MRC Document No. 89-02, W. W. Murdoch, et al., *Final Report of the Marine Review Committee to the California Coastal Commission*, California Coastal Commission, Marine Review Committee, San Francisco, California, 1989.

Mulchi, C. L., and J. A. Armbruster, "Response of Corn and Soybeans to Simulated Saline Aerosol Drift from Brackish Water Cooling Towers," *Journal of Environmental Quality*, **10**, 541-47, 1981.

Mulchi, C. L., and J. A. Armbruster, "Response of Maryland Tobacco to Saline Aerosol Emissions from Brackish Water Cooling Towers," *Journal of Environmental Quality*, **12**, 127-32, 1983.

Mulchi, C. L., et al., "Chalk Point: A Case Study of the Impact of Brackish Water Cooling Towers on an Agricultural Environment," *Journal of Environmental Quality*, **11**, 212-20, 1982.

Nakatani, R. E., "Effects of Heated Discharges on Anadromous Fishes," pp. 294-317 in P. A. Krenkel and F. L. Parker, eds., *Biological Aspects of Thermal Pollution*, Vanderbilt University Press, Nashville, Tennessee, 1969.

NCRPM (National Council on Radiation Protection and Measurements), *Natural Background Radiation in the United States*, Publication No. 45, November 1975.

NCRPM (National Council on Radiation Protection and Measurements), *Ionizing Radiation Exposure of the Population of the U.S.*, Report No. 93, Bethesda, Maryland, 1987.

Nelson, G. P., "Response of Elk to a 500-kV Transmission Line on the North Boulder Winter Range, Montana," M.S. thesis, Montana State University, Bozeman, Montana, 1986.

NESC *National Electrical Safety Code*, 1981 (available from IEEE, Institute of Electrical and Electronic Engineers, Inc., 345 East 47th St., New York, N.Y.).

Newton, M., and F. B. Knight, *Handbook of Weed and Insect Control Chemicals for Forest Resource Managers*, Timber Press, Beaverton, Oregon, 1981.

Nickerson, N. H., and R. Dobberteen, "Effects of Power Line Construction in Eastern Massachusetts Wetlands--A 10-Year Study with Positive Results," pp. 503-06 in W. R. Byrnes and H. A. Holt, eds., *Proceedings of the Fourth Symposium on Environmental Concerns in Rights-of-Way Management, Indianapolis, Indiana, October 25-28, 1987*, Purdue University, West Lafayette, Indiana, 1987.

Niemi, G. J., and J. M. Hanowski, "Effects of a Transmission Line on Bird Populations in the Red Lake Peatland, Northern Minnesota," *Auk* **101**, 487-98, 1984.

NPDES No. NC0024392, *Lake Norman: 1987 Summary, Maintenance Monitoring Program, McGuire Nuclear Station*, Duke Power Company, Charlotte, North Carolina, 1988.

NPDES No. NC0024392, D. H. Buetow et al., *Lake Norman: 1989 Summary--Maintenance Monitoring Program*, McGuire Nuclear Station, Duke Power Company, Huntersville, North Carolina, 1990.

NRC (U.S. Nuclear Regulatory Commission), Docket No. 50-255, *Environmental Assessment Relating to the Conversion of the Provisional Operating License to a Full-Term Operating License*, Consumers Power Company, Palisades Plant, October 1990.

NRC (U.S. Nuclear Regulatory Commission) Docket No. 50-488, *In the Matter of Duke Power Company (Perkins Nuclear Station)*, filed April 17, 1978.

NRC (U.S. Nuclear Regulatory Commission) Regulatory Guide 1.21, *Measuring, Evaluating, and Reporting Radioactivity in Solid Wastes and Releases of Radioactive Materials in Liquid and Gaseous Effluents from Light-Water -Cooled Nuclear Power Plants*, U.S. Nuclear Regulatory Commission, Office of Standards Development, June 1974.

NRC (U.S. Nuclear Regulatory Commission) Regulatory Guide 1.109, *Calculation of Annual Doses to Man from Routine Releases of Reactor Effluents for the Purpose of Evaluating Compliance with 10 CFR Part 50, Appendix 1*, U.S. Nuclear Regulatory Commission, Office of Standards Development, October 1977.

NRPB (National Radiological Protection Board), "Electromagnetic Fields and the Risk of Cancer," *Documents of the NRPB*, **3**(1), London, 1992.

NUMARC (Nuclear Management and Resources Council), *Study of Generic Environmental Issues Related to License Renewal*, Washington, D.C., 1989.

NUMARC (Nuclear Management and Resources Council), Survey of U.S. utility-owned nuclear power plants, Oak Ridge National Laboratory, Oak Ridge, Tennessee, and NUMARC, Washington, D.C., June 1990.

NUREG-0002, *Final Generic Environmental Statement on the Use of Recycle Plutonium in Mixed Oxide Fuel in Light-Water-Cooled Reactors*, U.S. Nuclear Regulatory Commission, August 1976.

NUREG-0042, *Final Environmental Statement Related to Selection of the Preferred Closed Cycle Cooling System at Indian Point Unit No. 2*, U.S. Nuclear Regulatory Commission, August 1976.

NUREG-0084, *Final Environmental Statement Related to the Construction of Montague Nuclear Power Station Units 1 and 2*, U.S. Nuclear Regulatory Commission, February 1977.

NUREG-0116 (Supplement 1 to WASH-1248), *Environmental Survey of the Reprocessing and Waste Management Portions of the LWR Fuel Cycle*, U.S. Nuclear Regulatory Commission, October 1976.

NUREG-0216 (Supplement 2 to WASH-1248), *Public Comments and Task Force Responses Regarding the Environmental Survey of the Reprocessing and Waste Management Portions of the LWR Fuel Cycle*, U.S. Nuclear Regulatory Commission, Office of Nuclear Material Safety and Safeguards, Washington, D.C., March 1977.

NUREG-0254, *Final Environmental Statement Related to Operation of Arkansas Nuclear One, Unit 2*, U.S. Nuclear Regulatory Commission, Office of Nuclear Reactor Regulation, June 1977.

NUREG-0343, *Final Addendum to the Final Environmental Statement for Operation of the Palisades Nuclear Generating Station*, U.S. Nuclear Regulatory Commission, February 1978.

NUREG-0394, *Impact of Offshore Nuclear Generating Stations on Recreational Behavior at Adjacent Coastal Sites*, U.S. Nuclear Regulatory Commission, December 1977.

NUREG-0512, *Final Environmental Statement Related to Construction of Greene County Nuclear Power Plant*, U.S. Nuclear Regulatory Commission, January 1979.

NUREG-0574, *Final Environmental Statement Related to Selection of the Preferred Closed Cycle Cooling System at Indian Point Unit No. 3*, U.S. Nuclear Regulatory Commission, December 1979.

NUREG-0713, C. T. Raddatz, and D. Hagemeyer, *Occupational Radiation Exposure at Commercial Nuclear Power Reactors and Other Facilities 1992*, U.S. Nuclear Regulatory Commission, December 1993.

NUREG-0720, C. R. Hickey, Jr., *Power Plant Siting and Design: A Case Study of Minimal Entrainment and Impingement Impacts at Davis-Besse Nuclear Power Station*, U.S. Nuclear Regulatory Commission, December 1980.

NUREG-0777, *Final Environmental Statement Related to the Operation of Grand Gulf Nuclear Station, Unit 1 and 2*, U.S. Nuclear Regulatory Commission, September 1981.

NUREG-0972, *Final Environmental Statement Related to the Operation of Shearon Harris Nuclear Power Plant, Units 1 and 2*, U.S. Nuclear Regulatory Commission, Office of Nuclear Reactor Regulation, October 1983.

NUREG-1003, Docket No. 50-261, *Final Environmental Statement Related to Steam Generator Repair at H. B. Robinson Steam Electric Plant, Unit No. 2*, U.S. Nuclear Regulatory Commission, November 1983.

NUREG/CR-0720, G. L. Guthrie et al., *LWR Pressure Vessel Irradiation Surveillance Dosimetry: Quarterly Progress Report for the Period October-December 1978*, Hanford Engineering Development Laboratory, Richland, Washington, July 1980.

NUREG/CR-0989 (PNL-2952), Adams et al., *The Visual Aesthetic Impact of Alternative Closed- Cycle Cooling Systems*, U.S. Nuclear Regulatory Commission, April 1980.

NUREG/CR-1085, *Final Environmental Statement Related to the Operation of Nine Mile Point Nuclear Station, Unit No. 2*, U.S. Nuclear Regulatory Commission, May 1985.

NUREG/CR-1231, B. L. Shipley et al., *Remote Sensing for Detection and Monitoring of Salt Stress on Vegetation: Evaluation and Guidelines*, U.S. Nuclear Regulatory Commission, March 1980.

NUREG/CR-2337, F. El-Shamy, et al., *Aquatic Impacts from Operation of Three Midwestern Nuclear Power Stations*, Vol. 4, U.S. Nuclear Regulatory Commission, October 1981.

NUREG/CR-2749, Vol. 1, *Socioeconomic Impacts of Nuclear Generating Stations: Arkansas Nuclear One Case Study*, U.S. Nuclear Regulatory Commission, July 1982.

NUREG/CR-2749, Vol. 4, *Socioeconomic Impacts of Nuclear Generating Stations: D. C. Cook Case Study*, U.S. Nuclear Regulatory Commission, July 1982.

NUREG/CR-2749, Vol. 5, *Socioeconomic Impacts of Nuclear Generating Stations: Diablo Canyon Case Study*, U.S. Nuclear Regulatory Commission, July 1982.

NUREG/CR-2749, Vol. 7, *Socioeconomic Impacts of Nuclear Generating Stations: Oconee Case Study*, U.S. Nuclear Regulatory Commission, July 1982.

NUREG/CR-2749, Vol. 12, *Socioeconomic Impacts of Nuclear Generating Stations: Three Mile Island Case Study*, U.S. Nuclear Regulatory Commission, July 1982.

NUREG/CR-2822, F. L. Harrison and J. R. Lam, *Concentrations of Copper-Binding Proteins in Livers of Bluegills from the Cooling Lake at the H. B. Robinson Nuclear Power Station*, U.S. Nuclear Regulatory Commission, November 1982.

NUREG/CR-2850, D. A. Baker, *Population Dose Commitments Due to Radioactive Releases from Nuclear Power Plant Sites in 1989*, U.S. Nuclear Regulatory Commission, February 1993.

NUREG/CR-2907, J. Tichler, et al., *Radioactive Materials Released from Nuclear Power Plants: Annual Report 1990*, prepared by Brookhaven National Laboratory, Upton, New York, for the U.S. Nuclear Regulatory Commission, October 1993.

NUS Corporation, *Annual Report for PVNGS Salt Deposition Monitoring Program*, NUS-5241, 1990.

Oliver, J. L., and P. L. Hudson, "Thermal and Dissolved Oxygen Characteristics of a South Carolina Cooling Reservoir," *Water Resources Bulletin*, **23**(2), 257-69, 1987.

ORAU-142, S. A. Gauthreaux, Jr., "Migratory Behavior and Flight Patterns," pp. 23-50 in *Proceedings of Impacts of Transmission es on Birds in Flight, January 31-February 2, 1978*, Oak Ridge Associated Universities, Oak Ridge, Tennessee, 1978a.

ORAU-142, R. L. Kroodsma, "Evaluation of a Proposed Transmission Line's Impact on Waterfowl and Eagles," pp. 117-28 in *Proceedings on Impacts of Transmission Lines on Birds in Flight, January 31-February 2, 1978*, Oak Ridge Associated Universities, Oak Ridge, Tennessee, 1978b.

ORAU-142, J. M. Lee, Jr., "Effects of Transmission Lines on Bird Flights: Studies of Bonneville Power Administration Lines," pp. 93-116 in *Proceedings on Impacts of Transmission Lines on Birds in Flight, January 31-February 2, 1978*, Oak Ridge Associated Universities, Oak Ridge, Tennessee, 1978c.

ORAU-142, L. S. Thompson, "Transmission Line Wire Strikes: Mitigation Through Engineering Design and Habitat Modification," pp. 51-92 in *Proceedings on Impacts of Transmission Lines on Birds in Flight, January 31-February 2, 1978*, Oak Ridge Associated Universities, Oak Ridge, Tennessee, 1978d.

ORAU-142, D. E. Willard, "The Impact of Transmission Lines on Birds in Flight (and Vice Versa)," pp. 5-15 in *Proceedings on Impacts of Transmission Lines on Birds in Flight, January 31-February 2, 1978*, Oak Ridge Associated Universities, Oak Ridge, Tennessee, 1978e.

ORNL-6165, R. L. Kroodsma and J. W. Van Dyke, *Technical and Environmental Aspects of Electric Power Transmission*, Oak Ridge National Laboratory, Oak Ridge, Tennessee, 1985.

ORNL/6237, T. E. Aldrich and C. E. Easterly, *Handbook of Epidemiologic Methods: With Special Emphasis on EMF Fields*, Oak Ridge National Laboratory, Oak Ridge, Tennessee, 1985.

ORNL/HUD/MIUS-52, W. T. Davis and J. O. Kolb, *Environmental Assessment of Air Quality, Noise and Cooling Tower Drift from the Jersey City Total Energy Demonstration*, Oak Ridge National Laboratory, Oak Ridge, Tennessee, 1980.

ORNL/NUREG/TM-226, B. R. Parkhurst and H. A. McLain, *An Environmental Assessment of Cooling Reservoirs*, Oak Ridge National Laboratory, Oak Ridge, Tennessee, December 1978.

ORNL/NUREG/TM-290 (NUREG/CR-0639), L. W. Barnthouse, et al., *An Empirical Model of Impingement Impact*, Oak Ridge National Laboratory, Oak Ridge, Tennessee, February 1979.

ORNL/TM-7801, G. F. Cada, et al., *Effects of Sublethal Entrainment Stresses on the Vulnerability of Juvenile Bluegill Sunfish to Predation*, Oak Ridge National Laboratory, Oak Ridge, Tennessee, 1981.

ORNL/TM-11121, S. E. Lindberg and D. W. Johnson, *Annual Report of the Integrated Forest Study*, Oak Ridge National Laboratory, Oak Ridge, Tennessee, 1989.

OTA (Office of Technology Assessment), *Biological Effects of Power Frequency Electric and Magnetic Fields, Background Paper*, OTA-BP-E-53, U.S. Congress, Office of Technology Assessment, Washington, D.C., 1989.

Park, S. H., and F. G. Taylor, *Cooling Tower Drift Studies at ORGDP--Final Report*, K/PS-1123, Oak Ridge Gaseous Diffusion Plant, Oak Ridge, Tennessee, 1985.

Park, S. H., and J. M. Vance, "Cooling Tower Drift Studies at Oak Ridge Gaseous Diffusion Plant," PPSP-CPCTP-22, WRRC Special Report No. 9, p. III, 215-30, in *Cooling Tower Environment--1978 Proceedings*, 1978.

Parsch, L. D., and M. D. Norman, "Impact of Powerlines on Crop Yields in Eastern Arkansas," *Arkansas Farm Research*, September-October 1986.

Paton, P. W. C., and C. Kneedy, "Great Blue Herons and Double-crested Cormorants Nesting on Powerline Towers," *Utah Birds*, **9**(3), 33-38, 1993.

Petridow, E., et al., "Suggestion of Concommitment Changes of Electric Power Consumption in Childhood Leukemia in Greece," *Scandinavian Journal of Social Medicine* 21, 281-285 (1993).

PGE-1009-88, *Operational Ecological Monitoring Program for the Trojan Nuclear Plant: Annual Report 1988*, Portland General Electric Company, Portland, Oregon, 1989.

Polk, C., and E. Postow, *Handbook of Biological Effects of Electromagnetic Fields*, CRC Press, Boca Raton, Florida, 1986.

Postovit, H. R., and B. C. Postovit, "Impacts and Mitigation Techniques," pp. 183-213 in B. A. G. Pendleton et al., eds., *Raptor Management Techniques Manual*, National Wildlife Federation, Washington, D.C., 1987.

Poznaniak, D. T., and T. J. Reed, "Recent Studies Examining the Biological Effects of UHV Transmission Line Ground Gradients," *Proceedings of the American Power Conference*, **40**, 1272-84, 1978.

PPSP-CPCTP-18, C. R. Curtis, et al., *Field Research on Native Vegetation*, 1977.

Rands, M. R. W., "The Survival of Gamebird (Galliformes) Chicks in Relation to Pesticide Use on Cereals," *Ibis*, **128**, 57-64, 1986.

Reese, K. P., and J. T. Ratti, "Edge Effect: A Concept Under Scrutiny," *Transactions of the North American Wildlife and Natural Resources Conference*, **58**, 127-36, 1988.

Regier, H. A., et al., "Introduction to Proceedings: Symposium on Effects of Climate Change on Fish," *Transactions of the American Fisheries Society*, **119**(2), 173-75, 1990.

Richards, B. R., et al., "Shipworms", pp. 201-25 in M. J. Kennish and R. A. Lutz, eds., *Ecology of Barnegat Bay, New Jersey*, Springer-Verlag, New York, 1984.

Richardson, J. W., *Terrestrial Plant Communities Studies, Environmental Monitoring and Ecological Studies Program, Vol. 2 of NSP 1976 Annual Report*, Prairie Island Nuclear Generating Plant, 1976.

Richardson, J. W., *Terrestrial Plant Communities Studies, Environmental Monitoring and Ecological Studies Program, Vol. 2, 1978 Annual Report*, Prairie Island Nuclear Generating Plant, 1978.

Ricker, W. E., "Computation and Interpretation of Biological Statistics of Fish Populations," *Fisheries Research Board of Canada, Bulletin*, **191**, 1975.

Rickett, J. D., *Dardanelle Reservoir-Illinois Bayou Embayment Survey Progress Report*, **26**, February 7, 1983.

Rickett, J. D., and R. L. Watson, "Phytoplankton Community Structure in Dardanelle Reservoir, Arkansas, 1975-1982," *Arkansas Academy of Science Proceedings* **37**, 70-73, 1983a.

Rickett, J. D., and R. L. Watson, "Zooplankton Community Structure in Dardanelle Reservoir, Arkansas, 1975-1982," *Arkansas Academy of Science Proceedings*, **37**, 65-69, 1983b.

Rickett, J. D., and R. L. Watson, "Fluctuations and Relationships of Selected Physicochemical Parameters in Dardanelle Reservoir, Arkansas, 1975-1982," *Arkansas Academy of Science Proceedings*, **34**, 98-102, 1985.

Risebrough, R. W., "Pesticides and Bird Populations," *Current Ornithology*, **3**, 397-427, 1986.

Roberts, B. L., and H. W. Dorough, "Relative Toxicities of Chemicals to the Earthworm *Eisenia foetida*," *Environmental Toxicology and Chemistry*, **3**, 67-78, 1984.

Rochow, J. J., "Measurements and Vegetational Impact of Chemical Drift from Mechanical Draft Cooling Towers," *Environmental Science and Technology*, **12**, 1379-83, 1978.

Roffman, A., and L. D. Van Vleck, "The State-of-the-Art of Measuring and Predicting Cooling Tower Drift and Its Deposition," *Journal of the Air Pollution Control Association*, **24**, 855-59, 1974.

Rogers, L., and R. Hinds, *Environmental Studies for a 1100-kV Power Line in Oregon*, report prepared by Battelle, Pacific Northwest Laboratories, Richland, Washington, for Bonneville Power Administration, 1983.

Rogers, L. E., et al., *Environmental Studies of a 1100-kV Prototype Transmission Line--Effects on Trees Growing Below the Line, An Annual Report for the 1984 Study Period*, prepared by Battelle, Pacific Northwest Laboratories, Richland, Washington, for Bonneville Power Administration, 1984.

Roosenburg, W. H., "Greening and Copper Accumulation in the American Oyster, *Crassostrea virginia*, in the Vicinity of a Stream Electric Generating Station," *Chesapeake Science*, **10**(3), 241-52, 1969.

Roppe, J. A., et al., "Prairie Falcon Nesting on Transmission Tower," *Condor*, **91**, 711-12, 1989.

Rusz, P. J., et al., "Bird Collisions with Transmission Lines near a Power Plant Cooling Pond," *Wildlife Society Bulletin*, **14**, 441-44, 1986.

Ryznar, E., et al., *An Investigation of the Meteorological Impact of Mechanical Draft Cooling Towers at the Palisades Nuclear Plant*, University of Michigan College of Engineering, 1980.

Saila, S. B., ed., *Fisheries and Energy Production: A Symposium*, D. C. Heath, Lexington, Massachusetts, 1975.

Sams, B. L., "Comparative Chemistry of Thermally Stressed North Lake and Its Water Source, Elm Fork Trinity River," M.S. thesis, North Texas State University, Denton, Texas, 1976.

Santillo, D. J., et al., "Response of Songbirds to Glyphosate-Induced Habitat Changes on Clearcuts," *Journal of Wildlife Management*, **53**, 64-71, 1989a.

Santillo, D. J., et al., "Responses of Small Mammals and Habitat to Glyphosate Application on Clearcuts," *Journal of Wildlife Management*, **53**, 164-72, 1989b.

Savidge, J. A., "Wildlife in a Herbicide-Treated Jeffrey Pine Planation in Eastern California," *Journal of Forestry*, **76**, 476-78, 1978.

Savitz, D. A., and W. T. Kaune, "Childhood Cancer in Relation to a Modified Residential Wire Code," *Environmental Health Perspectives*, **101**, 76-80 (1993).

Savitz, D. A., et al., "Case-Control Study of Childhood Cancer and Exposure to 60-Hz Magnetic Fields," *American Journal of Epidemiology*, **128**(1), 21-38, 1988.

Schreiber, R. K., et al., "Effects of Power Line Rights-of-Way on Small Nongame Mammal Community Structure," pp. 264-73 in R. E. Tillman, ed., *Proceedings of the First National Symposium on Environmental Concerns in Rights-of-Way Management, January 6-8, 1976*, Mississippi State University, Mississippi State, Mississippi, 1976.

Schubel, J. R., and B. C. Marcy, Jr., eds., *Power Plant Entrainment--A Biological Assessment*, Academic Press, New York, 1978.

Schulz, C. A., et al., "Herbicide Effects on Cross Timbers Breeding Birds," *Journal of Range Management*, **45**(4), 407-11, 1992a.

Schulz, C. A., et al., "Autumn and Winter Bird Populations in Herbicide-Treated Cross Timbers in Oklahoma," *American Midland Naturalists*, **127**(2), 215-23, 1992b.

Scott, W. S., "Effects of Transmission Towers on the Annual Costs of Tobacco and Fruit roduction," *Journal of Environmental Management*, **15**, 71-77, 1982.

Scott-Walton, B. et al., *Potential Environmental Effects of 765-kV Transmission Lines: Views Before the New York State Public Service Commission, Cases 26529 and 26559, 1976-1978*, U.S. Department of Energy, Washington, D.C., 1979.

Scott-Wasilk, J., et al., "A Comment on the Paper by John R. M. Kelso and Gary S. Milburn, "Entrainment and Impingement of Fish by Power Plants in the Great Lakes Which Use the Once-Through Cooling Process,'" (*Journal of Great Lakes Research*, **5**, 182-94, 1979), *Journal of Great Lakes Research* **7**, 491-95, 1981.

SEA (Science and Engineering Associates, Inc.), *Impact Driver Definition for Nuclear Plant License Renewal Study*, 1990.

Small, M. F., and M. L. Hunter, Jr., "Forest Fragmentation and Avian Nest Predation in Forested Landscapes," *Oecologia*, **76**, 62-64, 1988.

Small, M. F., and M. L. Hunter, Jr., "Response of Passerines to Abrupt Forest-River and Forest-Powerline Edges in Maine," *Wilson Bulletin*, **101**, 77-83, 1989.

Smith, J. C., "Perching and Roosting Patterns of Raptors on Power Transmission Towers in Southeast Idaho and Southwest Wyoming," *Raptor Research*, **19**, 135-38, 1985.

SNYPSC (State of New York Public Service Commission), *Opinion No. 78-13, Opinion and Order Determining Health and Safety Issues, Imposing Operating Conditions, and Authorizing, in Case 26529, Operation Pursuant to Those Conditions*, Power Authority of the State of New York, Albany, New York, 1978.

Solberg, K. L., and K. F. Higgins, "Effects of Glyphosate Herbicide on Cattails, Invertebrates and Waterfowl in South Dakota Wetlands," *Wildlife Society Bulletin*, **21**(3), 299-307, 1993.

Solley, W. B., et al., *Estimated Use of Water in the U.S. in 1980*, U.S. Geological Survey Circular 1001, U.S. Geological Survey, Alexandria, Virginia, 1983.

Spigarelli, S. A., et al., "Selected Temperatures and Thermal Experience of Brown Trout, Salmo Trutta, in a Steep Thermal Gradient in Nature," *Environmental Biology of Fishes*, **8**(2), 137-49, 1983.

Spitz, M. R., and C. C. Johnson, "Neuroblastoma and Paternal Occupation: A Case-Control Analysis," *American Journal of Epidemiology*, **121**, 924-29, 1985.

Stahlecker, D. W., "Effect of a New Transmission Line on Wintering Prairie Raptors," *Condor*, **80**, 444-46, 1978.

Steele, B. B., "Effects of Pesticides on Reproductive Success of White-Faced Ibis in Utah, 1979," *Colonial Waterbirds*, **7**, 80-87, 1984.

Steenhof, K., et al., "Nesting by Raptors and Common Ravens on Electrical Transmission Line Towers," *Journal of Wildlife Management*, **57**(2), 271-81, 1993.

Stevens, R. G., et al., "The Question of Cancer," in B. W. Wilson et al., eds., *Extremely Low Frequency Electromagnetic Fields: The Question of Cancer*, Batelle Press, Columbus, Ohio, 1990.

Stout, I. J., and G. W. Cornwell, "Nonhunting Mortality of Fledged North American Waterfowl," *Journal of Wildlife Management*, **40**, 681-93, 1976.

Sullivan, T. P., and D. S. Sullivan, "Responses of a Deer Mouse Population to a Forest Herbicide Application: Reproduction, Growth, and Survival," *Canadian Journal of Zoology*, **59**, 1148-54, 1981.

Sullivan, T. P., and D. S. Sullivan, "Responses of Small-Mammal Populations to a Forest Herbicide Application in a 20 -Year-Old Conifer Plantation," *Journal of Applied Ecology*, **19**, 95-106, 1982.

Talbot, J. J., "A Review of Potential Biological Impacts of Cooling Tower Salt Drift," *Atmospheric Environment*, **13**, 395-405, 1979.

Tatham, T. R., et al., "Survival of Fishes and Macroinvertebrates Impinged at Oyster Creek Generating Station," pp. 235-43 in L. D. Jensen, ed., *Fourth National Workshop on Entrainment and Impingement, Chicago, Illinois, December 5, 1977*, EA Communications, Melville, New York, 1978.

Taylor, F. G., Jr., "Chromated Cooling Tower Drift and the Terrestrial Environment: A Review," *Nuclear Safety*, **21**, 495-508, 1980.

Taylor, W. K., and M. A. Kershner, "Migrant Birds Killed at the Vehicle Assembly Building (VAB), John F. Kennedy Space Center," *Journal of Field Ornithology*, **57**, 142-54, 1986.

Temme, M., and W. B. Jackson, *Cooling Towers as Obstacles in Bird Migrations*, unpublished report, Bowling Green State University, Environmental Studies Center, Bowling Green, Ohio, 1979.

Thamke, J. N., "Water Supply and Use for Iowa," pp. 251-58 in J. E. Carr et al., *National Water Summary, 1987: Hydrologic Events and Water Supply and Use*, U.S. Geological Survey Water Supply Paper 2350, U.S. Geological Survey, Denver, 1990.

The Seventh Annual Report of the Council on Environmental Quality, Council on Environmental Quality, September 1976.

Thibodeau, F. R., and N. H. Nickerson, "Impact of Power Utility Rights-of-Way on Wooded Wetland," *Environmental Management*, **10**, 809-14, 1986.

Thompson, M. W., et al., "Effects of Herbicides and Burning on Overstory Defoliation and Deer Forage Production," *Wildlife Society Bulletin*, **19**(2), 163-70, 1991.

Thurber, N., and D. Jude, *Impingement Losses at the D. C. Cook Nuclear Plant During 1975-1979 with a Discussion of Factors Responsible and Relationships to Field Catches*, Special Report No. 104, University of Michigan, Great Lakes Research Division, Ann Arbor, Michigan, 1984.

Tilley, S., *A Summary of the Dardanelle Reservoir Fishery Survey Annual Reports*, Arkansas Power and Light, Environmental and Technical Services, 1983.

Tomenius, L., "50-Hz Electromagnetic Environment and the Incidence of Childhood Tumors in Stockholm County," *Bioelectromagnetics*, **7**, 191-207, 1986.

Tyndall, R. L., et al., "Chlorination as an Effective Treatment for Controlling Pathogenic *Naegleria* in Cooling Waters of an Electric Power Plant," pp. 1097-103 in *Water Chlorination*, Vol. 4, Book 2, 1983.

UNSCEAR (United Nations Scientific Committee on the Effects of Atomic Radiation), *Sources, Effects, and Risk of Ionizing Radiation, 1988 Report to the General Assembly*, Forty-third Session, Supplement No. 45 (A/43/45), United Nations, New York, 1988.

USGS (U.S. Geological Survey) *National Water Summary 1987*, U.S. Geological Survey Water Supply Paper 2350, Denver, 1990.

USGS Water-Data Report NJ-88-2, *Water Resources Data--New Jersey, Water Year 1988*, Vol. 2, *Delaware River Basin and Tributaries to Delaware Bay*, U.S. Geological Survey, West Trenton, New Jersey, 1988.

Van Winkle, W., et al., "An Analysis of the Ability to Detect Reductions in Year-Class Strength of the Hudson River White Perch (*Morone Americana*) Population, *Canadian Journal of Fisheries and Aquatic Science*, **38**(6), 627-32, 1981.

Varfalvy, L., et al., "Measurement and Statistical Analysis of Ozone from HVDC and HVAC Transmission Lines," *IEEE Transactions on Power Apparatus and Systems*, **PAS-104**(10), October 1985.

Varner, J. R., and S. G. Patel, "Irrigation Systems and Their Impact upon Existing and Proposed Transmission Lines," pp. 678-85 in A. F. Crabtree, ed., *Proceedings of the Third International Symposium on Environmental Concerns in Rights-of-Way Management San Diego, California, February 15-18, 1982*, Mississippi State University, Mississippi State, Mississippi, 1984.

Voorhees, L. D., "The Role of Chemicals in Management of Roadside Vegetation," pp. 352-64 in A. F. Crabtree, ed., *Proceedings of the Third International Symposium on Environmental Concerns in Rights-of-Way Management, San Diego, California, February 15-18, 1982*, Mississippi State University, Mississippi State, Mississippi, 1984.

Walker, C. H., "Pesticides and Birds--Mechanisms of Selective Toxicity," *Agriculture, Ecosystems and Environment*, **9**, 211-26, 1983.

Warren, J. L., et al., *Environmental Studies of a 1100 kV Prototype Transmission Line: An Annual Report for the 1980 Study Period*, Battelle, Pacific Northwest Laboratories, Richland, Washington, 1981.

Warren, R. C., et al., "Relative Abundance of Cavity Nesting Birds on Pine Plantations Site Prepared by Herbicides," pp. 197-205 in W. C. McComb, ed., *Proceedings of the Workshop on Management of Nongame Species and Ecological Communities*, University of Kentucky, Lexington, Kentucky, 1984.

WASH-1248, *Environmental Survey of the Uranium Fuel Cycle*, April 1974.

Water Use Permit No. 3533-R1, issued by the Iowa Department of Water, Air and Waste Management, October 12, 1984.

Wertheimer, N., and E. Leeper, "Electrical Wiring Configurations and Childhood Cancer," *American Journal of Epidemiology*, **109**, 273-84, 1979.

Wertheimer, N., and E. Leeper, "Adult Cancer Related to Electrical Wire Near the Home," *International Journal of Epidemiology*, **11**, 345-55, 1982.

Wetzel, K. L., and B. Johnson, "Water Supply and Use for Pennsylvania," pp. 433-40 in J. E. Carr et al., eds., *Water Summary 1987: Hydrologic Events and Water Supply and Use*, U.S. Geological Survey Water Supply Paper 2350, U.S. Geological Survey, Denver, 1990.

White, D. H., et al., "Body Lipids and Pesticide Burdens of Migrant Blue-Winged Teal," *Journal of Field Ornithology*, **52**, 23-28, 1981.

Wiedenfeld, R. P., et al., "Effects of Evaporative Salt Water Cooling Towers on Salt Drift and Salt Deposition on Surrounding Soils," *Journal of Environmental Quality*, **7**, 293-98, 1978.

Wilde, R., testimony from NRC (U.S. Nuclear Regulatory Commission) Docket No. 50-488, *In the Matter of Duke Power Company (Perkins Nuclear Station)*, filed April 17, 1978.

Wilkins, J. R. III, and R. A. Koutras, "Paternal Occupation and Brain Cancer in Offspring: A Mortality-Based Case-Control Study," *American Journal of Industrial Medicine*, **14**, 299-318, 1988.

Willard, D. E., and B. J. Willard, "The Interaction Between Some Human Obstacles and Birds," *Environmental Management*, **2**, 3331-40, 1978.

Willey, C. H., and L. F. Marion, "Transmission Line Corridor Crossings for White-Tailed Deer," *Transactions of the Northeast Section of the Wildlife Society*, **37**, 90-103, 1980.

Williams, R. D., and E. W. Colson, "Raptor Associations with Linear Rights-of-Way," *Western Raptor Management Symposium and Workshop No. 12*, 173-92, 1989.

Wilson, B. W., et al., *Extremely Low Frequency Electromagnetic Fields: The Question of Cancer*, Batelle Press, Columbus, Ohio, 1990.

Wilson, B. W., and L. E. Anderson, "EMF Electromagnetic-Field Effects on the Pineal Gland," in B. W. Wilson et al., eds., *Extremely Low Frequency Electromagnetic Fields: The Question of Cancer*, Batelle Press, Columbus, Ohio, 1990.

Windingstad, R. M., "Nonhunting Mortality in Sandhill Cranes," *Journal of Wildlife Management*, **52**, 260-63, 1988.

Witherell, D. B., and B. Kynard, "Vertical Distribution of Adult American Shad in the Connecticut River," *Transactions of the American Fisheries Society*, **119**(1), 151-55, 1990.

Wolke, R. E., et al., "Gas-Bubble Disease: A Review in Relation to Modern Energy Production," pp. 239-65 in S. B. Saila, ed., *Fisheries and Energy Production: A Symposium*, D. C. Heath and Company, Lexington, Massachusetts, 1975.

Wrenn, W. B., "Unresolved Issues in the Regulation of Thermal Discharges," paper presented *at the 120th Annual Meeting of the American Fisheries Society*, Pittsburgh, Pennsylvania, August 26-30, 1990.

Yahner, R. H., and D. P. Scott, "Effects of Forest Fragmentation on Depredation of Artificial Nests," *Journal of Wildlife Management*, **52**, 158-61, 1988.

Zweiacker, P. J., et al., "Evaluation of an Air-Bubble Curtain to Reduce Impingement at an Electric Generating Station," *Proceedings of the 31st Annual Conference of the Southeastern Association of Fish and Wildlife Agencies*, **31**, 343-56, 1977.

Page Last Reviewed/Updated Tuesday, March 22, 2011

©2000- 2011 NRC

Generic Environmental Impact Statement for License Renewal of Nuclear Plants (NUREG-1437 Vol. 1)

5. Environmental Impacts of Postulated Accidents

[**Prev** | **Next** | **Table of Contents**]

5.1 Introduction

[**Prev** | **Next** | **Table of Contents**]

This section discusses each aspect of postulated accidents that is normally treated in the final environmental statements (FESs) for the operation of nuclear power plants. Methodologies that estimate future risks at each existing nuclear power plant site in the United States are developed in Section 5.3.3, considering an additional 20-year period of operation beyond the current license term.

The characteristics of nuclear power plant accidents are discussed (Section 5.2.1) to acquaint the reader with (1) the sources of radiation from postulated accidents, (2) the potential pathways of radiation to the environment, and (3) the possible health effects of exposure to such accidental releases. Historical experience and observed impacts of nuclear power plant accidents are discussed next (Section 5.2.2), followed by a description of the various measures taken in the design and operation of a power plant to reduce the likelihood or consequences of an accident (Section 5.2.3).

The impacts of accident risks during a license renewal period are discussed in Section 5.3. A brief discussion of the primary concern arising from extending the operational life of nuclear power plants is provided (Section 5.3.1). This concern centers on the effects that plant aging and increasing population can have on the probability and consequences of accidents. Calculation of the estimated environmental impacts and risks due to postulated accidents during the license extension period is discussed in Sections 5.3.2 and 5.3.3. Consequences of design-basis and severe accidents are reviewed. The potential pathways for radiation release examined are (1) direct release to the atmosphere, (2) fallout on open bodies of water, and (3) groundwater. Existing severe accident analyses were reviewed and used to predict consequences at all sites. The potential economic impacts of accidents during the renewal period were also reviewed (Section 5.3.4). To maintain a perspective on the results of this analysis, a discussion of the uncertainties associated with the types of consequence analyses used in this evaluation is provided (Section 5.3.5). Finally, a discussion is given on the role of severe accident mitigation design alternatives (SAMDAs) in the license renewal process (Section 5.4).

5.2 Plant Accidents

[**Prev** | **Next** | **Table of Contents**]

5.2.1 General Characteristics of Accidents

The term "accident" refers to any unintentional event outside the normal plant operational envelope that results in a release or the potential for release of radioactive materials into the environment. Generally, the U.S. Nuclear Regulatory Commission (NRC) categorizes accidents as "design basis" (i.e., the plant is designed specifically to accommodate these) or "severe" (i.e., those involving multiple failures of equipment or function and, therefore, whose

likelihood is generally lower than design-basis accidents but where consequences may be higher), for which plants are analyzed to determine their response. The predominant focus in environmental assessments is on events that can lead to releases substantially in excess of permissible limits for normal operation. Normal release limits are specified in the NRC's regulations (10 CFR Part 20 and 10 CFR Part 50, Appendix I).

Many features combine to minimize the risk of accidents at nuclear power plants. These features include high-quality reactivity control and reactor cooling systems and containment and backup safety systems to respond to equipment failure. The incorporation of safety into design, construction, and operation is to a very large extent devoted to minimizing the possibility of the release of radioactive materials from their normal places of confinement within the plant. Descriptions of these safety features are provided in each licensee's final safety analysis report (FSAR) and in the NRC's safety evaluation report.

The plant design, including the types and number of safety systems, takes into consideration the specific locations of radioactive materials within the plant; their amounts; their nuclear, physical, and chemical properties; and their potential for transport into the environment and for creating health hazards.

5.2.1.1 Fission Product Characteristics

By far the largest inventory of radioactive material in a nuclear power plant is produced as a by-product of the fission process and is located in the uranium oxide fuel pellets in the reactor core in the form of fission products. During periodic refueling shutdowns, the assemblies containing these fuel pellets are transferred to a spent-fuel storage pool; the second largest inventory of radioactive material is located in this storage area. Much smaller inventories of radioactive materials are also normally present in the water that circulates in the reactor coolant system and in the systems used to process gaseous and liquid radioactive wastes in the plant.

Radioactive materials in power plants exist in a variety of physical and chemical forms. Their potential for dispersal into the environment depends not only on mechanical forces that might physically transport them, but also on their inherent properties, particularly their volatility. The majority of these materials exist as nonvolatile solids over a wide range of temperatures. Some, however, are relatively volatile solids, and a few are gaseous at normal temperatures and pressures. These characteristics have a significant bearing on the assessment of the environmental radiological impacts of accidents.

The gaseous materials include radioactive forms of the chemically inert noble gases krypton and xenon. These two gases have the highest potential for release into the atmosphere. If a reactor accident involving degradation of the fuel cladding were to occur, the release of substantial quantities of these radioactive gases from the fuel into the reactor cooling system would be virtually certain. Such accidents are low-frequency, but credible, events. For this reason, the safety analysis of each nuclear power plant incorporates a hypothetical design-basis accident that postulates the release of the entire contained inventory of radioactive noble gases from the fuel in the reactor into the containment structure. If the noble gases were further released to the environment as a result of failure to maintain the containment boundary, the hazard to individuals from these noble gases would arise predominantly through the external gamma radiation from the airborne plume. The reactor containment structure and containment support systems are designed to minimize the possibility of this type of release.

Radioactive forms of iodine are produced in substantial quantities in the fuel by the fission process, and in some chemical forms they may be quite volatile. For these reasons, iodine has traditionally been regarded as having a relatively high potential for release from the fuel into the containment during certain design-basis accidents. Because iodine concentrates in the thyroid gland, the release of radioiodines to the atmosphere is controlled by containment and by the use of special systems (i.e., filters) designed to retain the iodine.

The chemical forms in which the fission product radioiodines are found are generally solid materials at room temperatures; hence, they have a strong tendency to condense (or "plate out") on cooler surfaces. In addition, most of the iodine compounds are quite soluble in, or are chemically reactive with, water. Although these properties do not

prevent the release of radioiodines from degraded fuel, they would act to inhibit release from the containment structure that has large internal surface areas and may contain large quantities of water as a result of an accident. The same properties affect the behavior of radioiodines that may "escape" into the atmosphere. Thus, if it rains during a release, or if there is moisture on exposed surfaces (for example, dew), the radioiodines will show a strong tendency to be absorbed by the moisture.

Other radioactive materials formed during the operation of a nuclear power plant are less volatile and have a much smaller tendency to escape from degraded fuel unless the temperature of the fuel becomes very high. Such materials tend to condense quite rapidly when they are transported to a lower temperature region or to dissolve in water when it is present. This mechanism can result in production of very small particles that can be carried some distance by a moving stream of gas or air. If such particulate materials are dispersed into the atmosphere as a result of containment failure, they tend to be carried downwind and deposited on surfaces by gravitational settling (fallout) or by precipitation (washout or rainout), where they will become "contamination" hazards in the environment.

All of these radioactive materials exhibit the property of radioactive decay with half-life periods ranging from fractions of a second to many days or years. Many of the radioactive materials decay through a sequence of decay processes, and all eventually become stable (nonradioactive). The radiation emitted during these decay processes renders the radioactive materials hazardous.

5.2.1.2 Meteorological Considerations

Two separate analyses of accident sequences are performed during the licensing process for a nuclear power plant. The first analysis is the determination of the consequences for design-basis accidents and is performed for the NRC's safety evaluation report. This analysis is performed to ensure that the doses to any individual at the exclusion area boundary over a period of 2 hours, or at the outer boundary of the low population zone (LPZ) during the entire period of plume passage, will not exceed the siting dose guidelines of 25 rem to the whole body or 300 rem to the thyroid, pursuant to 10 CFR Part 100. This analysis is used to examine site suitability (10 CFR Part 100) and the mitigative capability of certain plant safety features (10 CFR Part 50). The atmospheric dispersion model for this evaluation, as described in the NRC Regulatory Guide 1.145, uses on-site meteorological data (typically, a multiyear record) considered representative of the site and vicinity to calculate relative dilutions that will be exceeded no more than 0.5 percent of the time in any one sector (22.5°) and no more than 5 percent of the time for all sectors (360°) at the exclusion area boundary and LPZ. These dilution factors, because they provide little plume spread, ensure site-specific calculated doses that could be exceeded only 5 percent of the time.

The second analysis of accident consequences is generally found in the environmental documentation for the most recently licensed nuclear plants and considers a spectrum of releases, including those for severe accidents. Actual meteorological conditions from a representative 1-year period of record of on-site data are used in this environmental analysis. A detailed description of the atmospheric dispersion model used to estimate the environmental impacts of such accidents is contained in NUREG-75/014 (formerly WASH-1400), Appendix VI.

5.2.1.3 Exposure Pathways

The radiation exposure (hazard) to individuals is determined by the individual's proximity to the radioactive materials; the duration, intensity, and type (external versus internal) of exposure; and factors that act to shield the individual from the radiation. Many of the pathways for radiation and the transport of radioactive materials that lead to radiation exposure hazards to humans are the same for accidental as for "normal" releases. These pathways are depicted in Figure 5.1. Two additional possible pathways that could be significant for accident releases are not shown in Figure 5.1. One of these pathways is the fallout of radioactivity onto open water or onto land with runoff into open water bodies. The second pathway would be unique to an accident involving temperatures high enough to cause melting of the reactor core and subsequent penetration of the reactor vessel and underlying base mat by the molten core debris. Such an occurrence would create the potential for the release of radioactive material into the hydrosphere via

groundwater beneath the plant. These pathways may lead to external exposure to radiation and also to internal exposure if radioactive material is contacted, inhaled, or ingested from contaminated food or water.

It is characteristic of all these pathways that during the transport of radioactive material by wind or water, the material tends to spread and disperse--like a plume of smoke from a smokestack--becoming less concentrated in larger volumes of air or water. The result of these natural processes is to lessen the intensity of exposure to individuals downwind or downstream of the point of release, but the processes also tend to increase the number who may be exposed. For a release into the atmosphere, the degree to which dispersion reduces the concentration in the plume at any downwind point is governed by the turbulence characteristics of the atmosphere, which vary considerably with time and from place to place. This fact, taken in conjunction with the variability of wind direction and the presence or absence of precipitation, means that accident consequences depend largely upon the

Figure 5.1 Potential exposure pathways to individuals.

weather conditions existing at the time of the accident.

5.2.1.4 Adverse Health Effects

The cause-and-effect relationships between radiation exposure and adverse health effects are quite complex. Whole-body radiation exposure resulting in a dose greater than about 25 rem over a short period of time (hours) is necessary before any physiological effects to an individual are clinically detectable[1] shortly thereafter. Doses about 10 to 20 times larger, also received over a relatively short period of time (hours to a few days), can be expected to cause some fatalities. At the severe (but extremely low probability) end of the accident spectrum, very high exposures of these magnitudes are theoretically possible for persons in proximity to the plant if measures are not or cannot be taken to provide protection, such as by sheltering or evacuation.

Lower levels of exposures may constitute a longer-term health risk. The effects of such exposures may include randomly occurring cancer in the exposed population and genetic changes in future generations after exposure of a prospective parent. Relating a given health effect to a known exposure to radiation is most often not possible because of the many other possible causes for such effects. For this reason, it is necessary to assess radiation-induced cancer effects on a statistical basis.

Occurrences of cancer in the exposed population may begin to develop only after a lapse of 2 to 15 years (latent period) from the time of exposure and continue over a period of over 40 years (plateau period). However, in the case of exposure of fetuses (in utero), occurrences of cancer may begin to develop at birth (no latent period) and end at age 10 (that is, the plateau period is 10 years). The occurrence of cancer itself is not necessarily indicative of a fatality because the ratio of mortality to incidence of cancer depends upon the cancer type and advances in medical treatment.

The estimates of health consequences used for latent fatalities in this document are the same estimators used in the development of the revised 10 CFR 20 regulations. A discussion is provided in Sections 3.8 and 4.6, and a more detailed discussion is provided in Section E.4, which details the recent developments in radiation risk estimation that lead to the health-consequence risk estimates in this section. The discussion in Section E.4 includes background information about epidemiology as well as health-effects information compiled by the United Nations Scientific Committee on the Effects of Atomic Radiation, by the National Academy of Sciences (reports of Advisory Committees on the Biological Effects of Ionizing Radiation--BEIR-I, BEIR-III, BEIR-V), and by the International Commission on Radiological Protection. The risk estimates for fatal cancers are considered to be nominally 500 per million person-rem, consistent with the risk factors described earlier (Section 3.8.1.3 and Appendix E.4). In addition, approximately 100 genetic disorders per million person-rem are projected for the succeeding generations.

5.2.1.5 Avoiding Adverse Health Effects

Radiation hazards in the environment disappear by the natural process of radioactive decay. Where the decay process is a slow one, however, and where the material becomes relatively fixed in its location as an environmental contaminant (such as in soil), the hazard can continue to exist for a long period of time--months, years, or even decades. Thus, a possible environmental societal reaction to severe accidents is avoidance of the potential health hazards by restrictions on the use of the contaminated property or contaminated foodstuffs, milk, and drinking water.

5.2.2 Accident Experience and Observed Impacts

A limited number of accidents have been recorded in the experience data of the world's nuclear programs. The United States, Great Britain, and the Soviet Union have all experienced accidents of varying magnitudes and consequences. The following paragraphs will discuss first the United States experience, followed by the British and then the Soviet accident experience.

As of September 1990, 112 commercial nuclear power reactor units were licensed for operation in the United States (Table 2.1) with power-generating capacities ranging from 72 to 1270 MW(e). The combined experience with these operating units represents approximately 1300 reactor-years (RYs) of operation over an elapsed time of about 28 years. [An additional 6 plants, with individual generating capacities of up to 1314 MW(e), are expected to receive an operating license within the next 10 years.] Several of these facilities have experienced accidents (ORNL 1980; NUREG-0651; Thompson and Beckerley 1964), some of which have resulted in small releases of radioactive material to the environment. None is known to have caused any radiation injury or fatality to any member of the public, nor any significant contamination of the environment. Although the experience base with light-water reactors (LWRs) having containments such as those licensed in the United States is not large enough to permit reliable statistical prediction of accident probabilities, it does, however, suggest that significant environmental impacts caused by accidents are not at all likely to occur over time periods of a few decades.

Melting or severe degradation of reactor fuel has occurred in only one U.S.-licensed commercial LWR--during the accident at Three Mile Island Unit 2 (TMI-2) on March 28, 1979. It has been estimated that about 2.5 million Ci of noble gases (about 0.9 percent of the core inventory) and 15 Ci of radioiodine (about 0.00003 percent of the core inventory) were released to the environment at TMI-2 (NUREG/CR-1250).[2] No other radioactive fission products were released in measurable quantities. It has been estimated that the maximum cumulative off-site radiation dose to an individual was less than 100 mrem (NUREG/CR-1250; *President's Commission* 1979). The total population exposure has been estimated to be in the range from about 1000 to 5000 person-rem. (This range is discussed on page 2 of NUREG-0558.) This exposure could statistically produce between zero and one additional fatal cancer over the lifetime of the exposed population of approximately 2 million in the site area. The same population receives about 240,000 person-rem each year from natural background radiation, and approximately a half million cancers are expected to develop in this group over the lifetime of the population (NUREG/CR-1250; *President's Commission* 1979), primarily from causes other than radiation. Trace quantities (barely above the limit of detectability, below allowable limits, and less than that from fallout due to nuclear tests) of radioiodine were found in a few samples of milk produced in the area. No other food or water supplies were affected.

Accidents at U.S. nuclear power plants have also caused occupational injuries and a few occupational fatalities, but these were not due to radiation exposure. Individual worker exposures have ranged up to about 4 rem as a direct consequence of reactor accidents (although there have been higher exposures to individual workers as a result of other unusual occurrences). However, the collective worker exposure levels (person-rem) from accidents are a small fraction of the exposures experienced during routine operation; during the 1982-1986 time period, routine exposures ranged from 23 to 2880 person-rem/year in pressurized-water reactors (PWR) and 84 to 4080 person-rem/year in boiling-water reactors (BWR) per RY (NUREG-0713).

Accidents have also occurred at other nuclear facilities in the United States and in other countries (ORNL 1980; Bertini 1980). Reactor fuel melted in at least seven of these accidents: Fermi 1 (Lagoona Beach, Michigan), St. Laurent (France), NRX Reactor (Chalk River, Canada), Experimental Breeder Reactor 1 (Idaho), Heat Transfer Reactor Experiment Facility (Idaho), Westinghouse Reactor (Waltz Mills, Pennsylvania), and Oak Ridge Research Reactor (Tennessee). Because of inherent differences in design, construction, operation, and purpose of these other facilities,

their accident record has only indirect relevance to current nuclear power plants. The most relevant accident was the one in 1966 at Enrico Fermi Atomic Power Plant Unit 1. Fermi Unit 1 was a sodium-cooled fast breeder demonstration reactor designed to generate 61 MW(e). The damages were repaired and the reactor reached full power 4 years after the accident. It operated successfully and completed its mission in 1973. The Fermi accident did not release any measurable radioactivity to the environment.

A reactor accident in 1957 at Windscale, England (renamed Seascale), released a significant quantity of radioiodine, approximately 20,000 Ci, to the environment and minor quantities of ^{137}Cs, ^{89}Sr, and ^{90}Sr (Eisenbud 1987) and ^{240}Po (Crick and Linsley 1983). This reactor, which was not operated to generate electricity, used a graphite core design and circulated air rather than water to cool the uranium fuel. During a special operation to heat the large amount of graphite in this reactor (an operation normal for this graphite-moderated reactor), the fuel overheated and radioiodine and noble gases were released directly to the atmosphere from a 123-m (405-ft) stack. Milk produced in a 518-km^2 (200-$mile^2$) area around the facility was impounded for up to 44 days. The United Kingdom National Radiological Protection Board (1957) estimates that the releases may have caused as many as 260 cases of thyroid cancer, about 13 of them fatal, and as many as 7 deaths from other cancers or hereditary diseases. This kind of accident cannot occur in a water-moderated and -cooled reactor like those in the U.S. nuclear power program.

On April 26, 1986, a major accident occurred at reactor 4 of the Chernobyl Nuclear Power Station in the Soviet Union. This reactor differs substantially from LWRs licensed to operate in the United States. The initiating event, a reactivity insertion, was recognized as a potential problem early in U.S. power reactor design; consequently, licensed U.S. power reactors are designed to prevent or accommodate occurrences of reactivity insertions. A major difference in safety between the U.S. designs and Chernobyl is that the Chernobyl reactor did not have a containment similar to those found on U.S. reactors. Also, the Chernobyl plant, which used graphite as a neutron moderator rather than water as with U.S. designs, had a positive power coefficient for the off-normal plant conditions that were present at the time of the accident. Thus, the accident has only indirect relevance to LWRs. The release of radioactive material from the accident was initially reported by the Soviets to be about 100 million Ci of fission products, but (except for the noble gases) that estimate included only material deposited within the European part of the Soviet Union. As a result of the accident, radionuclides were deposited throughout the Northern Hemisphere.

Of the almost 3 billion people in the Northern Hemisphere receiving Chernobyl radiation, about 800 million people account for 97 percent of the total risk increment. The remaining 3 percent of the dose commitment in Asia and North America represents a minuscule risk increment. Outside of the 30-km (19-mile) zone surrounding Chernobyl, the incremental increase in fatal cancer risk is a fraction of a percent and is not likely ever to be detected epidemiologically (DOE/ER-0332; Goldman 1987).

5.2.3 Mitigation of Accident Consequences

5.2.3.1 Design Features

All U.S. power reactors contain system features designed to prevent accidental release of radioactive fission products from the fuel and to lessen the consequences should such a release occur. Many of the design and operating specifications of these features are derived from the analysis of postulated events known as design-basis accidents. These accident-preventing and -mitigating system features are collectively referred to as "engineered safety features." Safety injection systems are incorporated to provide cooling water to the reactor core during a loss-of- coolant accident to prevent or minimize fuel damage. Heat-removal capability is provided inside the containment to prevent containment failure from overpressure. Long-term decay heat removal systems are also provided to remove decay heat from the core. All the mechanical systems mentioned above are supplied with emergency power from on-site diesel generators in the event that normal off-site station power is interrupted.

Containment structures are used as a mitigating system to provide a nearly leaktight barrier to minimize the escape of fission products to the environment in the event of a fission product release inside containment. These structures are designed to withstand the internal pressure and temperature associated with design-basis accidents.

The fuel-handling structures also have accident-mitigating systems. Spent fuel is handled and stored under water, which would tend to greatly reduce the amount of radioactive material released to the building environment in the event of fuel failure. A safety-grade exhaust air ventilation subsystem contains both charcoal and high-efficiency particulate filters. The ventilation systems are also designed to keep the area around the spent-fuel pool below the prevailing barometric pressure during fuel-handling operations to minimize the outleakage through building openings. Upon detection of high radiation, exhaust air is routed through the filter units, and radioactive iodine and particulate fission products which escaped from the spent fuel pool would be removed from the flow stream before exhausting to the atmosphere.

Much more extensive discussions of the safety features and characteristics of a particular plant may be found in the FSAR for that plant. In addition, the implementation of the lessons learned from the TMI-2 accident--in the form of improvements in design, procedures, and operator training--has significantly reduced the likelihood of a degraded-core accident that could result in large releases of fission products to the containment. These TMI-2-related requirements are specified in NUREG-0737.

5.2.3.2 Site Features

The NRC's site criteria, found in 10 CFR Part 100, require that every power reactor site have certain characteristics that tend to reduce the risk and potential impact of accidents. First, the site must have an exclusion area around the reactor. A typical exclusion area radius is about 0.8 km (0.5 mile). No residents are allowed in the exclusion area. Public transportation routes and other public activities are allowed within the exclusion area, but these routes and activities must be demonstrated to be controllable in the event of an emergency. Second, beyond and surrounding the exclusion area is an LPZ. A typical LPZ radius is about 5 km (3 miles). Within this zone, the licensee must ensure that there is a reasonable probability that appropriate protective measures could be taken on behalf of the residents and other members of the public in the event of a serious accident. Third, 10 CFR Part 100 requires that the distance from the reactor to the nearest boundary of a densely populated area containing more than 25,000 residents be at least one and one-third times the distance from the reactor to the outer bound of the LPZ.

5.2.3.3 Emergency Preparedness

Each licensee is required to establish emergency preparedness plans to be implemented in the event of an accident, including protective action measures for the public. The NRC, as well as other federal and state regulatory agencies, review the subject plans to ensure that the condition of on- and off-site emergency preparedness provides reasonable assurance that adequate protective measures can and will be taken in the event of a radiological emergency. Among the standards that must be met by these plans are provisions for two emergency planning zones (EPZs). A plume exposure pathway EPZ (requiring preplanned evacuation procedures) of about 16 km (10 miles) in radius and an ingestion exposure pathway EPZ (where interdiction of foodstuffs is planned) of about 80 km (50 miles) in radius are required. Other standards include appropriate ranges of protective actions for each of these zones; provisions for dissemination to the public of basic emergency planning information; provisions for rapid notification of the public during a serious reactor emergency; and methods, systems, and equipment for assessing and monitoring actual or potential off-site consequences in the event of a radiological emergency condition.

5.3 Accident Risk and Impact Assessment for License Renewal Period

[**Prev** | **Next** | **Table of Contents**]

5.3.1 Regulatory Interface Between License Renewal and Accident Impacts

In general, the safety and environmental issues associated with license renewal fall into two general categories: (1) effects of aging on the physical plant itself and the associated impact of these effects on accident frequency and radiological releases and (2) effects on accident consequences due to the changing environment in which the plant exists.

The potential effects of age on the physical plant are addressed through engineering and research programs. Potential deterioration of plant components and structures due to physical processes such as corrosion, erosion, mechanical wear, and embrittlement could result in the increased likelihood of component or structure failure. These increased failure rates, in turn, could lead to a higher frequency of accidents or more severe consequences. Therefore, control of these effects is necessary if the plant is to be assured of continuing to operate in a safe manner. As a result, NRC has developed the license renewal process within the context of the aging issue. The process will provide assurance that these age-related impacts are controlled and adequate protection of the health and safety of the public is maintained during the 20-year license renewal period. To supplement the control that the normal regulatory process has over the aging effects on the plant, the NRC requires that the renewal applicant specifically address the issue of age-related degradation by identifying, in an integrated plant assessment process, those structures and components which are susceptible to age-related degradation and whose functions are necessary to ensure that the facility's licensing basis is maintained. The licensee will further be required to demonstrate that the effects of aging will be adequately managed so that the intended functions of these structures and components will be maintained for the period of extended operation. The combined impact of these actions should be to provide high confidence that significant incremental increases in public risk will not result from aging effects related to the plant. A comprehensive discussion of the NRC rule, programs, and activities to provide this assurance is found in 55 *FR* 29043, dated July 17, 1990.

In assessing the impact on the environment from postulated accidents during the license renewal period, the assumption has been made that the license renewal process will ensure that aging effects on the plant are controlled and that the probability of any radioactive releases from accidents will not increase over the license renewal period.

The effects due to the changing environment around the plant during the license renewal period are less predictable, are generally not subject to regulatory controls, and could cause an increase in public risk as the plant continues to operate. These effects manifest themselves primarily by increasing the consequences of a given accident. For example, as the general population in the vicinity of a nuclear plant increases, the number of persons that could be affected by an accidental release also increases. Because these impacts are "noncontrollable," their potential for increasing risk as well as the magnitude of any such increase in risk must be specifically examined. Such an examination is presented in the following sections, which will discuss and assess the potential adverse impacts to the environment from postulated accidents during the license renewal period.

5.3.2 Design-Basis Accidents

Two classes of accidents are evaluated. The first class of accidents, design-basis accidents, is discussed in this section. The second, severe accidents, is discussed in Section 5.3.3. As noted previously, design-basis accidents are those that both the licensee and the NRC staff evaluate to ensure that the plant meets acceptable design and performance criteria. The environmental impacts of design-basis accidents are evaluated during the initial license process, and the ability of the plant to accommodate these accidents is demonstrated to be acceptable before issuance of the license. The results of these evaluations are found in license documentation such as FESs and FSARs. The licensee is required to maintain these acceptable design and performance criteria throughout the life of the plant, including any extended-life operation. The consequences for these events are evaluated for the hypothetical maximum exposed individual; as such, changes in the plant environment will not affect these evaluations. Because of the requirements that continuous acceptability of the consequences and aging management programs be in effect for license renewal, the environmental impacts as calculated for design-basis accidents should not differ significantly from initial licensing assessments over the life of the plant, including the license renewal period. In addition, any refurbishment necessary to prepare for license renewal would be done in a fashion consistent with the limits set for design-basis accidents and would not alter their consequences. Accordingly, the design of the plant relative to design-basis accidents during the extended license period is considered to remain acceptable and the environmental impacts of those accidents will not be examined further in this section.

5.3.3 Probabilistic Assessment of Severe Accidents

This section presents the staff's assessment of impacts of severe accidents during the license renewal period. Methodologies were developed to evaluate each of the dose pathways by which a severe accident may result in adverse environmental impacts and to estimate off-site costs of severe accidents.

Three pathways for release of radioactive material to the environment from severe accidents are evaluated in this section for each plant site for the license renewal period. These pathways are (1) air, (2) air to surface water, and (3) groundwater to surface water. For most plants, the air pathway represents the most likely pathway for significant dose to the public. The air to surface water pathway is significant for only a few sites that are close to large but confined bodies of water. The third pathway represents a less significant potential for dose because of reduction in radioactivity due to retention in the ground and greater flexibility and time to implement interdiction measures. Separate methodologies were developed for quantifying the potential consequences resulting from each pathway for each site. Economic impacts from severe accidents during the license renewal period are also described in this chapter.

Section 5.3.3.1 reviews the existing analyses available for use in this Generic Environmental Impact Statement (GEIS) study; Section 5.3.3.2 examines the effects of atmospheric releases, including vegetation pathways; Section 5.3.3.3 examines the effects from direct fallout onto open bodies of water; Section 5.3.3.4 reviews effects from releases to groundwater; and Section 5.3.3.5 examines the economic impacts of severe accidents. All analyses will adhere to a process that uses the results of existing analyses and site-specific information to conservatively predict the environmental impacts of severe accidents for each plant during the license renewal period.

5.3.3.1 Review of Existing Impact Assessments

The public risk due to nuclear power accidents has a range of values. The staff believes that current regulatory practices ensure that the basic statutory requirement, adequate protection of the public, is met (51 *FR* 28044). These risk estimates are representative of the magnitude of risk associated with current regulatory practices. Since the early 1970s, there have been increasing efforts to determine severe accident risks more precisely and on a plant-specific basis. The first comprehensive plant-specific examination of risk was the Reactor Safety Study (RSS), published in 1975 (NUREG 75/014, formerly WASH-1400). The risk values calculated in RSS were later updated in NUREG-0773 and used in NRC FESs published after 1980. Later, more complex and more intensive plant-specific risk studies were developed, both by NRC and the industry. The most recent NRC studies of severe accident consequences are found in the NUREG-1150 analyses. To date, about 40 percent of the 118 operating plants and plants under construction have had some level of plant-specific risk analysis reviewed by NRC. This body of knowledge was used in the prediction of environmental impacts of severe accidents for all plants. Further details of these studies are provided in the following paragraphs.

FES reports since 1980 (Table 5.1) have provided assessments of impacts resulting from postulated severe accidents. Both the frequency and magnitude of the source terms ("source term" is a descriptive name for the releases of radioactive material to the environment under various accident conditions) for such assessments were usually taken from the rebaselined RSS (NUREG-0773). [These values are the result of updating the original RSS (NUREG-75/014, formerly WASH-1400) results using improved methods relative to the original WASH-1400 methodology.] Table 5.2 provides more information on the source-term data used in the FES analyses. These rebaselined source terms were then used with site-specific meteorological and demographic data to calculate off-site risk. A separate rebaselined set of source terms was provided for each of the two types of reactor designs, BWRs and PWRs. In most FES assessments, these same sets of data, without change, were used to evaluate off-site risks. Accordingly, the risk values provided in these FESs are based upon the plant designs analyzed in WASH-1400. As such, they do not represent plant-specific analyses for the FES plants but are sufficient to illustrate the general magnitude and types of risks that may occur from reactor accidents. There were some exceptions in that several studies included some further modification of the rebaselined RSS frequency estimates to better account for plant-specific design differences from the RSS plants. When available, other studies used plant-specific information on severe accident risks [such as probabilistic risk assessments (PRAs)]. Once the source-term data were established, all plants used the Calculation of Reactor Accident Consequences (CRAC) code to determine environmental consequences. Site-specific information regarding

meteorology, population, and evacuation was used. Assumptions regarding exposure pathway, exposure limits, and plume behavior remained largely unchanged for all analyses.

The NUREG-1150 study is an NRC-sponsored risk examination of five U.S. nuclear power plants.[3] These analyses used state-of-the-art technology in evaluation of source-term release frequency, source-term characteristics, and consequence evaluation. Efforts were made to explore uncertainties in accident frequency, containment behavior, and radioactive material release and transport so that from this distribution of results, mean values of risk could be determined. Source terms and frequencies specific to the plant were determined. Advanced computer codes were used. For example, the MELCOR Accident Consequence Code System (MACCS) computer code for consequence evaluation was used instead of CRAC.

Table 5.1 Available risk analyses associated with final environmental statements

Plant	NSSS[a] vendor	Plant size [MW(e)]	Containment type	NUREG document number	NUREG date
Beaver Valley 2	W	836	Subatmospheric	1094	9-85
Braidwood 1, 2	W	1120	Large dry	1026	6-84
Byron 1, 2	W	1120	Large dry	0848	4-82
Callaway 1	W	1171	Large dry	0813	1-82
Catawba 1, 2	W	1145	Ice condenser	0921	1-83
Clinton 1	GE	933	Mark III	0854	5-82
Comanche Peak 1, 2	W	1150	Large dry	0775	9-81
Fermi 2	GE	1093	Mark I	0769	8-81
Grand Gulf 1, 2	GE	1250	Mark III	0777	9-81
Shearon Harris 1, 2	W	900	Large dry	0972	10-83
Hope Creek	GE	1067	Mark I	1074	6-84
Indian Point 2, 3	W	873/965	Large dry	*b*	*b*
Limerick 1, 2	GE	1055	Mark II	0974	12-83
Millstone 3	W	1154	Subatmospheric	1064	12-84
Nine Mile Point 2	GE	1091	Mark II	1085	5-85
Palo Verde 1, 2, 3	CE	1270	Large dry	0841	2-82
Perry 1, 2	GE	1191	Mark III	0884	8-82
River Bend	GE	936	Mark III	1073	1-85
San Onofre 2, 3	CE	1070/1080	Large dry	0490	4-81
Seabrook 1, 2	W	1198	Large dry	0895	12-82
South Texas 1, 2	W	1250/1251	Large dry	1171	8-86
St. Lucie 2	CE	830	Large dry	0842	4-82
Summer 1	W	900	Large dry	0719	5-81
Susquehanna 1, 2	GE	1050	Mark II	0564	6-81
Vogtle 1, 2	W	1101	Large dry	1087	3-85
Waterford 3	CE	1104	Large dry	0779	9-81
Wolf Creek 1	W	1170	Large dry	0878	6-82
WNP-2[c]	GE	1100	Mark II	0812	12-81

[a]NSSS = nuclear steam supply system, W = Westinghouse, GE = General Electric, CE = Combustion Engineering.
[b]Indian Point 2 and 3 consequence information was obtained from Atomic Safety and Licensing Board testimony.
[c]WNP-2 = Washington Nuclear Project 2.

Table 5.2 Source term information used for final environmental statement severe accident analyses

Plant	Source term used	Comments
Beaver Valley 2	Rebaselined Reactor Safety Study (RSS)	Pressurized-water reactor (PWR) source terms and frequencies from NUREG-0773 used
Braidwood 1, 2	Rebaselined RSS modified	PWR source terms and frequencies from NUREG-0773 modified for specific Braidwood design features
Byron 1, 2	Rebaselined RSS	Same as Beaver Valley
Callaway 1	Rebaselined RSS	Same as Beaver Valley
Catawba 1, 2	Rebaselined RSS	Same as Beaver Valley
Clinton 1	Rebaselined RSS	Boiling-water reactor (BWR) source terms and frequencies from NUREG-0773 used
Comanche Peak 1, 2	Rebaselined RSS	Same as Beaver Valley
Fermi 2	Rebaselined RSS	Same as Clinton
Grand Gulf 1, 2	Rebaselined RSS	Same as Clinton
Shearon Harris 1, 2	Rebaselined RSS	Same as Beaver Valley
Hope Creek	Rebaselined RSS	Same as Clinton
Indian Point 2, 3	Plant specific	
Limerick 1, 2	Rebaselined RSS (modified)	BWR source terms and frequencies from NUREG-0733 modified for specific Limerick design features. External events also included
Millstone 3	Plant-specific probabilistic risk analysis (PRA)	Source terms and frequencies from plant specific PRA used
Nine Mile Point 2	Limerick PRA (modified)	Source terms and frequencies from Limerick PRA modified for specific Nine Mile Point Unit 2 design features
Palo Verde 1, 2, 3	Rebaselined RSS	Same as Beaver Valley
Perry 1, 2 See footnote at end of table.	Rebaselined RSS	Same as Clinton
River Bend	Grand Gulf RSS Methodologies Applications Program (MAP)	Source terms and frequencies from Grand Gulf RSS MAP (NUREG/CR-1659) with no modification
San Onofre 2, 3	Rebaselined RSS	Same as Beaver Valley
Seabrook 1, 2	Rebaselined RSS	Same as Beaver Valley
South Texas 1, 2	Rebaselined RSS (modified)	PWR source terms and frequencies from NUREG-0773 modified for specific South Texas design features
St. Lucie 2	Rebaselined RSS	Same as Beaver Valley
Summer 1	Rebaselined RSS	Same as Beaver Valley
Susquehanna 1, 2	Rebaselined RSS	Same as Clinton
Vogtle 1, 2	Rebaselined RSS (modified)	PWR source terms and frequencies from NUREG-0773 modified for specific Vogtle design features
Waterford 3	Rebaselined RSS	Same as Beaver Valley
Wolf Creek 1, 2	Rebaselined RSS	Same as Beaver Valley
WNP-2[a]	Rebaselined RSS	Same as Clinton

[a]Washington Nuclear Project 2.

The industry-sponsored risk assessments (e.g., Oconee 3, Seabrook, and Millstone 3) are similar in that efforts are made to reduce the degree of conservatism and to use the best information available. For these studies, source-term levels and frequencies specific to the plant are calculated.

Finally, studies exist that provide a detailed assessment of the risk due to specific types of accidents. For example, two such studies are NUREG-0440, which is a generic study of the radiological risks that could result from a severe accident that releases significant contamination into the groundwater, and NUREG-0769 (Addendum 1), which estimates the risks from direct contamination of the Great Lakes due to fallout from a severe accident at the Enrico Fermi 2 power plant. These two as well as other specific risk studies are used in this GEIS to provide a projection of risk during the license renewal period.

Severe accidents initiated by external phenomena such as tornadoes, floods, earthquakes, fires, and sabotage have not traditionally been discussed in quantitative terms in FESs. With the exception of sabotage, the NRC staff has, however, reviewed or performed detailed probabilistic assessments of external events for Zion Units 1 and 2, Indian Point Units 2 and 3, Limerick Units 1 and 2, Surry Unit 1, Peach Bottom Unit 2, and Millstone Unit 3. In most cases, the external event risks were determined to be comparable to internal event risks. However, for Zion and Limerick, the licensee's PRAs indicated that external events could be significant contributors to risk. For the Indian Point units, NRC staff evaluations also indicated that external events could significantly contribute to severe accident risk. The most recent NRC analysis of external events has been the NUREG-1150 external events assessment for Surry Unit 1 and Peach Bottom Unit 1. This analysis examined a broad range of external events and found that they could range from negligible to significant contributors to risk when compared with internal initiators. It should be noted, however, that in cases where external event risk was shown to be a significant contributor to the overall risk, the majority of the estimated risk arose from large beyond design basis earthquakes; but in all cases, the total risk (internal and external) is still small.

NRC's earthquake design standards have been conservatively developed to ensure protection of the public health and safety from earthquakes whose magnitudes are well above the most likely earthquake magnitude when considering the collective earthquakes history for specific plant sites in the United States. Therefore, earthquakes exceeding NRC seismic design standards are extremely unlikely. However, in the unlikely event of such an earthquake, there would be substantial damage to older residential structures, commercial structures, and high-hazard facilities such as dams whose seismic design standards are below nuclear seismic design standards. The societal impact due to the non-nuclear losses alone from an earthquake larger than the design basis of a nuclear plant, including property damage, injuries, and fatalities, would be major. The technology for assessing losses from such large earthquakes is a developing one, and there are several ongoing studies of this technology, including work at the United States Geological Survey. Presently there is no agreed-upon method for performing such assessments, although a recent report of the National Academy of Sciences suggests some broad guidelines (NAS 1989). The NRC has not developed a method for assessing the societal losses from large earthquakes such that the reactor contribution to accident consequences can be quantitatively compared with the non-nuclear losses. However, as supported by at least one study (Lee et al. 1979), the commission expects that the reactor accident contribution to the losses from large beyond design basis earthquakes would be small relative to the non-nuclear losses. While this in itself does not mean the reactor consequences from such an earthquake would be small, the commission concludes that even with potentially high consequences from a beyond design basis earthquake, the extremely low probability of such earthquake yields a small risk from beyond design basis earthquakes at existing nuclear power plants.

With regard to sabotage, quantitative estimates of risk from sabotage are not made in external event analyses because such estimates are beyond the current state of the art for performing risk assessments. The commission has long used deterministic criteria to establish a set of regulatory requirements for the physical protection of nuclear power plants from the threat of sabotage, 10 CFR Part 73, "Physical Protection of Plants and Materials", delineates these regulatory requirements. In addition, as a result of the World Trade Center bombing, the Commission amended 10 CFR Part 73 to provide protection against malevolent use of vehicles, including land vehicle bombs. This amendment requires licenses to establish vehicle control measures, including vehicle barrier systems to protect against vehicular sabotage. The regulatory requirements under 10 CFR part 73 provide reasonable assurance that the risk from sabotage is small. Although the threat of sabotage events cannot be accurately quantified, the commission believes that acts of sabotage are not reasonably expected. Nonetheless, if such events were to occur, the commission would expect that resultant core damage and radiological releases would be no worse than those expected from internally initiated events.

Based on the above, the commission concludes that the risk from sabotage and beyond design basis earthquakes at existing nuclear power plants is small and additionally, that the risks form other external events, are adequately addressed by a generic consideration of internally initiated severe accidents.

Although external events are not discussed in further detail in this chapter, it should be noted that the NRC is continuing to evaluate ways to reduce the risk from nuclear power plants from external events. For example, each licensee is performing an individual plant examination to look for plant vulnerabilities to internally and externally initiated events and considering potential improvements to reduce the frequency or consequences of such events. Additionally, as discussed in Section 5.4.1.2, as part of the review of individual license renewal applications, a site-specific consideration of alternatives to mitigate severe accidents will be performed in order to determine if improvements to further reduce severe accident risk or consequences are warranted.

5.3.3.2 Dose and Adverse Health Effects from Atmospheric Releases

5.3.3.2.1 Methodology for Predicting Future Risk Summary of methodology

The assessment of environmental impacts due to the atmospheric release pathway are described in this section. This pathway includes the exposure of individuals directly from the passage of the cloud of radioactive material released from an accident and from material deposited on the ground, as well as the longer-term effects from other terrestrial pathways such as the ingestion of crops. Doses and the resulting health effects (early and latent fatalities) will be estimated for the middle year of relicense (MYR) population. The MYR is the estimated midpoint of the renewal period for a given plant rounded upward to the next year of available population data. Predictions of MYR risk were generated by taking the results of existing risk calculations (i.e., plant-specific estimates of early fatalities, latent fatalities, and dose) and regressing those values against a composite site-specific variable called the exposure index (EI). EI is a function of population surrounding the plant weighted by the site-specific wind direction frequency and, thus, is a site-specific parameter. Because meteorological patterns, including wind direction frequency, tend to remain constant over time, EI changes as populations change or become redistributed.

A straight-line regression of the total risk values (taken from FES analyses) for each plant listed in Table 5.1 versus the EI for that plant (at the date assumed in the FES analyses) was calculated. Average and 95 percent upper confidence bound values of total risk were estimated. Risks for individual plants for their license renewal period were then estimated from the upper confidence bound values based on MYR population data converted to MYR EI. In the prediction of risk using EI (discussed in the preceding paragraph), the assumption was made that future plant risk is primarily a function of population and wind direction. Secondary factors--such as terrain, rainfall, and wind stability--also have some effect on risk, but their impact was judged to be much smaller than the effects of population and wind direction.

Selection of appropriate existing analyses for use in regression

Currently, 118 nuclear plants are in operation or under active construction in the United States. These 118 plants represent 72 sites for the evaluation of air pathway consequences bsp;sites are used for the other two pathway evaluations).[4] As noted previously, only a portion of these nuclear plants have severe accident analyses available for review.

The data selected for use in this GEIS analysis were taken from the FESs published since 1981. As discussed previously, these FES analyses are based upon source terms resulting from the RSS (NUREG-75/014, formerly WASH -1400) rebaselined in NUREG-0773. As such, these source terms (and the resulting risk and environmental impacts calculated using them) reflect the plant designs used in WASH-1400. However, this approach is considered conservative because the source terms developed in WASH-1400 generally reflect an "as found" (late 1970s) and, as such, do not reflect the improvements that have been made in nuclear industry plant design and operations since the

early 1980s. Accordingly, the use of WASH-1400 source terms in the FESs may, in many cases, tend to overestimate the actual environmental consequences and risks.

Since the RSS study was completed, the NRC has implemented several industry-wide risk-reduction programs. These programs, such as station blackout (10 CFR 50.63), anticipated transient without scram (10 CFR 50.62), resolution of other generic safety issues, improvements resulting from the extensive reviews of the accident at Three Mile Island (NUREG-0737), and the individual plant examination and containment performance improvement programs, have served to lower the overall average values of nuclear plant risk relative to their values prior to the changes. Because the programs are implemented on an industry-wide basis, risk values should be smaller at all plants. No quantification of the overall risk reduction has been performed, but it is believed that the risk reduction is significant. As a result of the changes, the staff believes that the spectrum of risk for the entire nuclear industry shifted downward to lower overall risk values, and the average total risk for all nuclear plants is smaller than the risk estimated in the original RSS analyses. Thus, RSS risk estimates are more representative of the upper end of the total nuclear plant risk spectrum than the actual current risks.

The preceding discussion shows that the use of the FES risk values provides reasonable estimates of the actual average risk of the general nuclear plant population and that the use of the FES values in this analysis results in appropriate risk values in the GEIS. Where there were choices of methodology and the best method was not obvious, the staff chose the method that would lead to higher predicted values. The use of the 95 percent upper prediction confidence bounds from the regression in this analysis (discussed later) provides even greater assurance that the GEIS does not underestimate potential future environmental impacts.

As for use of detailed PRA analyses in the GEIS, particularly the NUREG-1150 studies, the plants represented in these detailed PRAs have had the benefit of considerable risk reduction feedback and improvement; consequently, their predicted risk values are not considered to be representative of the absolute values of the general plant population risk. However, these studies do provide significant risk information on the relative risks to the public as a function of distance from the plant. Because of the much more advanced computational tools available during the NUREG-1150 studies (which could better model secondary effects such as rainfall pattern), as well as more than 10 years of additional knowledge about severe accidents, the information on the distribution of risk at a specific plant, as estimated by the NUREG-1150 reports, is considered more realistic and representative of the actual environmental impacts due to the air pathway for severe accidents. The GEIS uses this relative risk information in its analysis process.

Enveloping of all plants with FES analyses

Many factors could potentially increase the consequences to the general public resulting from a severe-accident release. A comprehensive listing and description of factors that influence consequences are provided in the *PRA Procedures Guide* (NUREG/CR-2300). The purpose of this section is to use, to the extent possible, the available severe accident results (Table 5.3), in conjunction with those factors that are important to risk and that change with time to estimate the consequences of nuclear plant accidents for all plants for a time period that exceeds the time frame of existing analyses. This estimation process was completed by predicting increases or decreases in consequences as the plant lifetime is extended past the normal license period by considering the projected changes in the risk factors. The primary assumption in this analysis is that regulatory controls will ensure that the physical plant condition (i.e., the predicted probability of and radioactive releases from an accident) will be maintained at a constant level during the renewal period; therefore, the frequency and magnitude of a release will remain relatively constant. In other words, significant changes in consequences will result only from changes in the plant's external environment. The most logical approach, then, would be to incorporate the most significant environmental factors into calculations of consequences for subsequent correlation with existing analyses (which use the consequence computer codes). The two parameters selected for this analysis are population and wind direction, as discussed in the following paragraphs.

Table 5.3 Comparison of general site characteristics. Italics indicate that the final environmental statement contains severe accident evaluations

Plant	MYR evaluation date[a]	MYR 50-mile population[b]	MYR 50-mile population in high-frequency wind direction	Rain[c]	Snow[c]	General terrain[d]
Arkansas 1	2030	245,476	20,471	51	5	3
Arkansas 2	2030	245,476	20,471	51	5	3
Beaver Valley 1	2030	4,039,282	1,177,194	36	46	3
Beaver Valley 2	2050	4,169,673	1,202,284	36	46	3
Bellefonte 1	2050	1,473,597	60,836	56	3	4
Bellefonte 2	2050	1,473,597	60,836	56	3	4
Big Rock Point	2030	228,199	61	31	111	2
Braidwood 1	2050	5,092,832	1,534,979	30	28	2
Braidwood 2	2050	5,092,832	1,534,979	30	28	2
Browns Ferry 1	2030	926,918	27,791	47	3	4
Browns Ferry 2	2030	926,918	27,791	47	3	4
Browns Ferry 3	2030	926,918	27,791	47	3	4
Brunswick 1	2030	304,703	7,703	51	2	1
Brunswick 2	2030	304,703	7,703	51	2	1
Byron 1	2050	1,141,541	29,618	18	34	2
Byron 2	2050	1,141,541	29,618	18	34	2
Callaway 1	2030	463,360	17,712	37	19	3
Calvert Cliffs 1	2030	3,481,008	256,881	41	21	1
Calvert Cliffs 2	2030	3,481,008	256,881	41	21	1
Catawba 1	2050	2,337,775	139,401	42	5	4
Catawba 2	2050	2,337,775	139,401	42	5	4
Clinton 1	2050	869,226	27,294	35	23	2
Comanche Peak 1	2030	1,654,378	54,431	31	3	1
Comanche Peak 2	2050	1,875,643	61,419	31	3	1
Cooper	2030	217,516	19,745	28	28	2
Crystal River 3	2030	655,382	0	42	0	1
D.C. Cook 1	2030	1,440,998	15	36	69	2
D.C. Cook 2	2030	1,440,998	15	36	69	2
Davis Besse	2030	2,169,925	20	32	37	2
Diablo Canyon 1	2050	419,046	4	32	0	6
Diablo Canyon 2	2050	419,046	4	32	0	6
Dresden 2	2030	7,453,539	143,593	33	30	2
Dresden 3	2030	7,453,539	143,593	33	30	2
Duane Arnold 1	2030	754,825	26,445	33	31	2
Farley 1	2030	488,464	21,412	54	0	1
Farley 2	2050	542,746	25,242	54	0	1
Fermi 2	2050	6,647,763	0	31	31	2
FitzPatrick	2030	804,876	12,128	34	88	2
Fort Calhoun 1	2030	887,478	14,526	30	32	2
Ginna	2030	1,112,686	0	33	86	2
Grand Gulf 1	2050	504,930	15,143	50	2	1

Haddam Neck (Connecticut Yankee)	2030	4,136,066	120,354	43	53	5
Hatch 1	2030	416,412	43,798	44	1	1
Hatch 2	2030	416,412	43,798	44	1	1
Hope Creek	2050	5,424,373	54,596	40	23	1
Indian Point 2[e]	2030	15,195,541	602,427	43	6	3
Indian Point 3[e]	2030	15,195,541	602,427	43	26	3
Kewanee 1	2030	733,618	0	28	45	2
La Salle 1	2050	1,366,307	61,875	35	28	2
La Salle 2	2050	1,366,307	61,875	35	28	2
Limerick 1	2050	7,615,980	794,765	59	20	1
Limerick 2	2050	7,615,980	794,765	59	20	1
Maine Yankee	2030	830,737	19,668	43	71	5
McGuire 1	2050	2,543,485	134,597	43	6	4
McGuire 2	2050	2,543,485	134,597	43	6	4
Millstone 1	2030	3,138,820	1,419	39	26	5
Millstone 2	2030	3,137,820	1,419	39	26	5
Millstone 3	2050	3,325,582	1,462	39	26	5
Monticello 1	2030	2,815,967	1,587,694	24	42	2
Nine Mile Point 1	2030	802,759	12,239	34	88	2
Nine Mile Point 2	2050	811,475	12,478	34	88	2
North Anna 1	2030	1,478,490	41,700	44	16	4
North Anna 2	2030	1,478,490	41,700	44	16	4
Oconee 1	2030	1,311,318	53,947	53	6	4
Oconee 2	2030	1,311,318	53,947	53	6	4
Oconee 3	2030	1,311,318	53,947	53	6	4
Oyster Creek 1	2030	4,561,213	929	41	16	1
Palisades	2030	1,337,910	9,582	36	69	2
Palo Verde 1	2050	1,974,946	2,700	13	0	3
Palo Verde 2	2050	1,974,946	2,700	13	0	3
Palo Verde 3	2050	1,974,946	2,700	13	0	3
Peach Bottom 2	2030	5,283,198	122,770	38	35	4
Peach Bottom 3	2030	5,283,198	122,770	38	35	4
Perry 1	2050	2,767,417	0	34	52	2
Pilgrim 1	2030	4,881,755	0	42	42	1
Point Beach 1	2030	700,257	13,275	24	45	2
Point Beach 2	2030	700,257	13,275	24	45	2
Prairie Island 1	2030	2,961,583	29,124	24	44	2
Prairie Island 2	2030	2,961,583	29,124	24	44	2
Quad Cities 1	2030	810,640	13,191	36	29	2
Quad Cities 2	2030	810,640	13,191	36	29	2
Rancho Seco 1	2030	2,589,992	303,556	17	0	6
River Bend	2050	1,105,994	15,770	54	0	1

Robinson 2	2030	991,450	30,941	45	2	4
Salem 1	2030	5,180,877	49,873	40	23	1
Salem 2	2050	5,372,611	54,002	40	23	1
San Onofre 1	2030	7,048,438	0	12	0	1
San Onofre 2	2050	7,764,644	0	12	0	1
San Onofre 3	2050	7,764,644	0	12	0	1
Seabrook 1	2050	4,452,452	344	43	75	5
Sequoyah 1	2030	1,208,316	205,182	58	4	3
Sequoyah 2	2050	1,334,579	226,371	58	4	3
Shearon Harris 1	2050	2,122,597	75,055	45	7	4
Shoreham	2050	5,692,690	170,058	47	34	1
South Texas 1	2050	382,195	29,850	42	0	1
South Texas 2	2050	382,195	29,850	42	0	1
St. Lucie 1	2030	1,036,446	41,401	32	0	1
St. Lucie 2	2050	1,245,868	49,375	32	0	1
Summer 1	2050	1,385,612	83,181	45	2	4
Surry 1	2030	2,506,022	36,210	45	10	1
Surry 2	2030	2,506,022	36,210	45	10	1
Susquehanna 1	2050	1,575,680	34,206	35	50	4
Susquehanna 2	2050	1,575,680	34,206	35	50	4
Three Mile Island 1	2030	2,294,045	263,028	38	37	3
Trojan 1	2030	2,822,894	116,369	42	7	6
Turkey Point 3	2030	4,156,261	93,491	54	0	1
Turkey Point 4	2030	4,156,261	93,491	54	0	1
Vermont Yankee	2030	1,709,869	58,938	43	60	5
Vogtle 1	2050	932,240	17,480	42	1	1
Vogtle 2	2050	932,240	17,480	42	1	1
Waterford 3	2050	2,778,959	45,309	54	0	1
Watts Bar 1	2050	1,367,537	56,133	53	9	3
Watts Bar 2	2050	1,367,537	56,133	53	9	3
WNP-2 [f]	2050	405,235	23,692	5	18	3
Wolf Creek 1	2050	273,225	26,641	31	15	2
Yankee Rowe	2010	1,796,823	471,262	37	66	5
Zion 1	2030	8,199,956	0	32	58	2
Zion 2	2030	8,199,956	0	32	58	2

[a]MYR = Middle year of license renewal period rounded up to the next year for which population forecasts were available.

[b]50 miles = 80 km.

[c]Annual average in inches.

[d]Terrain categories: 1 = coastal plain, 2 = central lowlands, 3 = plateaus, 4 = parallel valleys and ridges, 5 = rolling hills to high mountains, 6 = steep mountains.

[e]Severe accident information obtained from Atomic Safety and Licensing Board testimony and not from the final environmental statement.

[f]WNP-2 = Washington Nuclear Project 2.

Many factors can affect the amount of radiation to which the public is exposed. The magnitude of impact varies for any individual factor and generally is very specific to a particular plant or site. If the FES risk results are to be used to predict future risk values for all plants, it should be demonstrated that the FES plants provide a reasonable envelope of the more significant risk factors for all plants. Such factors include population density, meteorology, evacuation, and interdiction. Studies have shown that some factors have a greater degree of influence than others; for example, population has a very strong influence over risk (NUREG/CR-2239, NUREG-1150). Evacuation can have a significant influence on early fatality risk but a much more limited impact on latent fatality risk. Interdiction primarily reduces latent fatality risk. While particular aspects of meteorology, such as rainfall, can have a significant impact on peak risk values, mean health effect values are relatively insensitive to meteorology. When the basic reasons for the risk influence of each factor are examined, these factors can generally be reduced to three issues: (1) the number of people exposed to the severe accident release, (2) the likelihood that any given individual receives an exposure, and (3) the amount of radiation the individual receives. Consequently, site population (which reflects the number of people potentially at risk to severe accident exposure) and wind direction frequency (which reflects the likelihood of exposure) have been chosen as the primary factors affecting risks.

Although there are other secondary factors (e.g., source term and dose response relationship) that can influence risk and were not specifically analyzed on a plant-specific basis in this GEIS, these factors were not ignored as their impact is included in the FES analyses whose results are the basis for the GEIS analyses. Consequently, their effects are indirectly considered in the prediction of future risks and are reflected within the uncertainty bounds generated by the regression of the FES risk values. To ensure that the existing FES analyses cover a range of secondary factors representative of the total population of plants, the more significant secondary factors were examined as discussed below. The secondary factors examined are as follows:

- average annual precipitation,
- residential population within a 50-mile (80-km(radius of the plant,
- population [50 miles (90 km)] in highest frequency wind direction,
- general terrain, and
- emergency planning.

Average annual precipitation. After an atmospheric release caused by a severe accident, the fallout rate of the released radionuclides is generally the result of gravitational settling and, consequently, is not a rapid process. This slow fallout allows a given release to be suspended for sufficient time to allow for some radioactive decay of the shorter-lived radionuclides, resulting in lower individual doses to the public. In addition, releases are distributed over a wide area, resulting in relatively low individual doses (although the overall total population dose is not greatly affected). However, precipitation counteracts both of these effects by washing the radionuclides out of the atmosphere and not allowing time for extensive dispersion or decay. Thus, plant sites with higher levels of annual precipitation may indicate higher levels of risk for those measures that are based on individual doses.

Residential population within a 50-mile radius of the plant. This factor is a rather understandable selection in that plant sites with larger resident populations will have a larger number of persons at risk for a given severe accident release. Population projections were made based on the 1980 census data and projected growth (decline) factors derived from the U.S. Bureau of Census evaluations. A radius of 50 miles was selected for comparison purposes because existing analyses indicate a large majority (although not all) of early health effects from a severe accident release occur within 50 miles of the plant site.

Population (50 miles) in highest-frequency wind direction. This factor highlights a "higher risk" sector of the overall population around a specific plant site. The sector is 22.5° and the population is 0 to 50 miles from the plant in that sector. Higher populations combined with higher frequency of wind in that direction may indicate higher risks in that sector.

General terrain. This factor is chosen because the dispersion behavior of the plume may be influenced by the general terrain surrounding the plant (e.g., plains versus mountains). Six terrain classifications were selected as described in footnote c to Table 5.3.

Table 5.3 shows the values for these four factors for all nuclear plant sites. As can be seen, the existing severe accident analysis as provided in those FESs containing a severe accident evaluation provides a reasonable envelope for precipitation (rainfall and snowfall), 50-mile population, and 50-mile population in the direction of highest wind frequency. All six terrain classifications are also covered by referenced FES analyses. From review of these data, it is concluded that the FES plants sufficiently envelop these factors. Likewise, any plant risk projections that are developed from the FES severe accident results will reasonably account for secondary effects from these factors if the upper confidence bounding values from the projections are used to estimate the risk from atmospheric releases for plants during their license renewal period.

Emergency planning. Even in the event of a release of radioactive material from a plant, protective actions can be taken to move or shelter members of the public in the projected path of the radioactive cloud. The success of these actions in preventing exposure of members of the public to the radioactive material is dependent upon the warning time available prior to the release and the time it takes to carry out the protective actions. In general, this latter item (the time to carry out the protective action) is mostly influenced by the size of the population around the plant. Each FES that addresses severe accidents considers the effects of site-specific emergency planning in calculating exposures and risks to the public. Since the FES plants include sites with populations that reasonably cover the range of populations at all 74 sites, a range of emergency planning is considered in the data used for the predictions of early and latent fatalities during the license renewal period. Thus, this GEIS analysis should reasonably account for the effects of emergency planning.

Projections of estimates of risk

Detailed severe accident consequence (early and latent fatalities and total dose) evaluations are not available for all plants. Therefore, a predictor for these consequences was developed using correlations based upon the calculated results from the existing FES severe accident analyses. This predictor was then used to infer the future consequence level of all individual nuclear plants. Correlations were developed using two environmental parameters that are available for all plants. This correlation process is described below.

Discussion of exposure index

Population, which changes over time, defines the number of people within a given distance from the plant. Wind direction, which is assumed not to change from year to year, helps determine what proportion of the population is at risk in a given direction, because radionuclides are carried by the wind. Therefore, an EI relationship was developed by multiplying the wind direction frequency (fraction of the time per year) for each of 16 (22.5°) compass sectors times the population in that sector for a given distance from the plant and summing all products. An example calculation for an EI value for 1990 at 10 miles (16 km) is shown in Table 5.4. The EI value, as calculated in Table 5.4, can be considered to be the expected population at risk for the year 1990 out to a distance of 10 miles from the nuclear power plant. Population varies with population growth and movement, and with the distance from any given plant. As the population changes for that plant, the EI also changes (the larger the EI, the larger the number of people at risk). Thus, EI is proportional to risk and an EI for a site for a future year can be used to predict the risk to the population around that site in that future year.

Regression of FES values

Several relationships of EI versus risk were developed by regressing total early fatality, normalized total latent fatality, and normalized total dose values on various EI values for the FES plants (see Appendix G). The EI values at 10 miles were found to best correlate with early fatalities, which is to be expected because, in the FES analyses, early fatalities tend to be clustered close to the plant. The EI values at 150 miles (241 km) were found to best correlate with latent

fatalities and total dose. This finding is to be expected because the magnitudes of these risk values are largely influenced by the exposure of large populations around the plant.

Table 5.4 Example calculation for exposure index (EI) value with 1990 populationat 10-mile radius from plant

Direction segment	*A* (wind frequency in given direction)	*B* (1990 population within 10 miles of Plant *X*)[a]	*C* (product)
N	0.06	100	6.0
NNE	0.06	105	6.3
NE	0.02	55	1.1
ENE	0.10	20	2.0
E	0.08	25	2.0
ESE	0.08	24	1.92
SE	0.09	75	6.75
SSE	0.10	125	12.5
S	0.06	400	24.0
SSW	0.05	275	13.75
SW	0.07	100	7.0
WSW	0.06	78	4.68
W	0.06	72	4.32
WNW	0.06	40	2.40
NW	0.02	80	1.6
NNW	**0.03**	**78**	**2.34**
	1.00	1652	EI = 98.66

[a]10 miles = 16 km.

Note: To calculate EI value: *A* x *B* = *C*; EI = sum of *C*.

Because the magnitude of the source term is generally proportional to plant power for a given accident sequence, the FES estimates for total latent fatalities used in the latent fatality regression were first normalized to 1000 MW(t) to minimize the regression variance due to the differing plant sizes. A linear dose response function is used in the FES analyses, and because of the assumptions of downwind and crosswind spread, radioactive material is predicted to be widely dispersed. Thus, the larger the amount of radioactive material released, the larger the predicted latent fatality level (slightly reduced from strict linearity by the interdiction assumptions). Similar logic is applicable to normalization of total dose. Normalization was not used for early fatalities because of the highly nonlinear dose response function used in the FES analyses and the use of a threshold effect (that is, there is a dose level below which no early fatality is predicted). Nonetheless, early fatalities are also highly influenced by the amount of radioactive material released (i.e., plant size), and to help ensure that early fatality data from smaller plants do not distort the regression results for the larger plants, only the early fatality data for plants greater than 3025 MW(t) were used in the regression of early fatalities (Table 5.5, footnote f). The inability to correct fully for the effects of plant size and the dose-early fatality relationship leads to a higher dispersion in the regression estimates, which influences the upper confidence bound (UCB) as will be seen in subsequent sections.

Also, in several of the FES documents, two sets of early fatality values were provided, one set which assumed minimal medical support was available to aid the exposed population and a second set which assumed normal and expected levels of medical support were available. The regression used those early fatality values associated with expected medical support levels. The assumption there would be only minimal or no medical support after an accident was considered to be unrealistic. A detailed discussion of the regression analyses and UCB is provided in Appendix G.

5.3.3.2.2 Results

The data in Table 5.5 summarize the information for 28 nuclear plant sites that were used to develop the relationship between EI and consequences of severe accidents analysis for both PWRs and BWRs. Because of fundamental design differences between PWRs and BWRs, separate regression analyses were performed for each to better account for the BWR-PWR differences in plant failure modes and source terms. Accordingly, the PWR regression was used to determine the best fit relationship for PWR risk values and the BWR regression was used to determine the best fit relationship for FES BWR risk values. As can be seen in Figures 5.2-5.7, two lines (representing average and UCB values) result from the regression analyses for total early fatalities, total latent fatalities, and total dose. The 95 percent UCB (dashed line) was developed based on the scatter in the data. Two points need to be made about the UCB. First, two UCB values were calculated: one value assuming that the data points (i.e., early and latent fatalities and population dose) had a normal distribution about some mean and the second value assuming that the data points did not have a normal distribution about the mean. The larger of the two UCB values was then used in making plant risk projections. The second point to be noted is that because of the small number of data used in the regressions (18 PWR data points and 10 BWR data points), the scatter in the data (expressed as residuals) for all 28 data points was used in determining the UCB for both the PWR and BWR regressions.

Table 5.5 Information used for regression analyses for expected early, latent, and total dose at 28 nuclear plant sites for the license renewal period

Normalized values are obtained by converting nonnormalized values to the equivalent of a 1000-MW(t) plant

Plant	FES analysis[a] date of population	EI values[b] (10 miles)	EI values[b] (150 miles)	Expected early[c,d] fatalities (persons/reactor year)	Expected latent fatalities (persons/reactor year)		Expected total dose (person-rem/reactor yea	
					Nonnormalized[c]	Normalized[e]	Nonnormalized[c]	Normaliz
Beaver Valley 2	2010	9,195	958,330	0.002 [f]	0.022	0.0083	230	86.73
Braidwood 1, 2	2000	1,916	1,435,347	0.00038	0.0138	0.004	180	52.77
Byron 1, 2	2000	1,391	1,084,499	0.00026	0.016	0.0047	218	63.91
Callaway 1	2000	508	343,991	0.0001	0.0077	0.0022	126	35.34
Catawba 1, 2	2000	5,414	678,486	0.0011	0.0124	0.0036	170	49.84
Clinton 1	2000	658	1,272,955	0.000009 [f]	0.0191	0.0066	320	110.57
Comanche Peak 1, 2	2000	1,251	292,169	0.0001	0.0046	0.0014	58	17.00
Fermi 2	2000	4,165	1,112,272	0.00074	0.04	0.012	520	157.96
Grand Gulf 1, 2	2000	437	297,829	0.00006	0.0055	0.0014	100	26.09
Shearon Harris 1, 2	2010	1,415	550,951	0.00018 [f]	0.0088	0.0032	114	41.08
Hope Creek	2010	1,541	1,822,818	0.0003	0.07	0.021	1000	303.67
Indian Point 2, 3[g]	1990	18,325	2,743,032	0.0115 [h]	0.826[i]	0.299	10,400 [i]	3770.8
Limerick 1, 2	2000	10,307	2,455,497	0.00914	0.0957	0.029	1360	413.00
Millstone 3	2010	8,751	1,397,683	0.0008	0.05	0.015	1000	293.17

Nine Mile Point 2	2000	1,500	269,042	0.0004	0.023	0.007	300	90.28
Palo Verde 1, 2, 3	2000	67	194,928	0.0000021	0.00456	0.0012	67	17.63
Perry 1, 2	2000	4,465	920,212	0.000016	0.0285	0.008	470	131.32
River Bend	2000	1,485	334,565	0.0004 [f]	0.047	0.016	700	241.88
San Onofre 2, 3	2000	3,950	978,306	0.001	0.033	0.0097	380	112.09
Seabrook 1, 2	2000	4,090	448,066	0.0006	0.0075	0.0022	105	30.78
South Texas 1, 2	2010	236	461,241	0.0000007	0.0108	0.0028	250	65.79
St. Lucie 2	2000	8,739	540,442	0.00007 [f]	0.0064	0.0024	78	28.89
Summer 1	2000	647	627,969	0.00017 [f]	0.0094	0.0034	130	46.85
Susquehanna 1, 2	2000	3,760	1,995,580	0.00077	0.0227	0.0069	360	109.32
Vogtle 1, 2	2010	117	469,641	0.00001	0.024	0.007	310	90.88
Waterford 3	2000	4,745	285,560	0.00057	0.0059	0.0017	69	20.35
Wolf Creek 1	2000	311	289,260	0 [j]	0.00559	0.0016	99	29.02
WNP-2[k]	2000	108	100,055	0.00032	0.00487	0.0015	77	23.17

[a]The population estimates for the indicated year were used to evaluate the consequences to the public for the final environmental statement (FES).

[b]Exposure index (EI) values are given for FES analysis date of population (see note a).

[c]Values obtained from FES for the respective plant with the exception of Indian Point (See note g).

[d]Due to threshold dose effects, these estimates cannot be normalized (i.e., effects are not linear until an exposure threshold is reached).

[e]Normalized to 1000 MW(t) (see Appendix G).

[f]Plant thermal power < 3025 MW(t) and was not used in the regression for expected early fatalities.

[g]Expected risk values obtained from Atomic Safety and Licensing Board testimony and not from FES.

[h]Risk values for Indian Point 3 are listed.

[i]Risk values for Indian Point 2 are listed.

[j]Because values of zero have no meaning on log scales, this data point was not used in the regression for early fatalities.

[k]WNP-2 = Washington Nuclear Project 2.

Note: Multiply person-rem by 0.01 to find person-sieverts; multiply miles by 1.609 to find kilometers.

Figure 5.2 Log plot of early fatalities (average deaths per reactor-year) for final environmental statement boiling-water reactor plants, fitted regression line (solid curve), and 95 percent normal-theory upper prediction confidence bounds (dotted curve).

Figure 5.3 Log plot of early fatalities (average deaths per reactor-year) for final environmental statement pressurized-water reactor plants, fitted regression line (solid curve), and 95 percent normal-theory upper prediction confidence bounds (dotted curve).

Figure 5.4 Log plot of normalized latent fatalities (average deaths per 1000 MW reactor-year) for final environmental statement boiling-water reactor plants, fitted regression line (solid curve), and 95 percent distribution-free upper prediction confidence bounds (dotted curve).

Figure 5.5 Log plot of normalized latent fatalities (average deaths per 1000 MW reactor-year) for final environmental statement pressurized-water reactor plants, fitted regression line (solid curve), and 95 percent distribution-free upper prediction confidence bounds (dotted curve).

Figure 5.6 Log plot of normalized total dose (person-rem per 1000 MW reactor-year) for final environmental statement boiling-water reactor plants, fitted regression line (solid curve), and 95 percent distribution-free upper prediction confidence bounds (dotted curve).

Figure 5.7 Log plot of normalized total dose (person-rem per 1000 MW reactor-year) for final environmental statement pressurized-water reactor plants, fitted regression line (solid curve), and 95 percent distribution-free upper prediction confidence bounds (dotted curve).

Using the UCB results of the regression analysis, the values for total early fatalities, total latent fatalities, and total dose were then predicted for each site at their MYRs, rounded up to the nearest year for which projected population data are available (2010, 2030, 2050). The results of the UCB projections for early fatalities, latent fatalities, and total dose are shown in Table 5.6. The EI values corresponding to the MYR for each site, which were used to make these predictions, are shown in ;Tables 5.7 and 5.8. Data for the Millstone plant provide a good example of the process by which these projections were made. The EI at 10 miles for Millstone (an FES plant) is 9420 at its MYR (2050) (Table 5.7). An EI of 9420 results in a projected early fatality UCB of 0.025 fatalities/RY. This value is higher than that reported in the Millstone FES for the year 2010 (0.0008 fatalities/RY, as shown in Table 5.5) and represents a conservative projection of the increase in early fatalities that could occur as a result of increased population around the Millstone site. The effects on risk due to factors such as emergency planning, meteorology (other than the frequency of wind direction--e.g., rainfall), and topography were accounted for in the FES analyses of severe accidents and are consequently incorporated into the FES risk values. Any variation in risk resulting from variation of these secondary parameters among FES plants will be reflected in the UCB calculated by the regressions. As discussed in Section 5.3.3.2.1, the FES plants reasonably envelop these secondary effects. If the future risks for all plants are then estimated using the appropriate (BWR or PWR) regression and the MYR EI, the resulting UCB values are estimated future risks that are not expected to be exceeded.

It should be noted that the risk values for latent fatalities provided in the FESs were calculated using the CRAC computer code which used a linear-quadratic cancer model based on older, low-level radiation exposure data (BEIR-III). Recent evaluations of the EI methodology (see Section 5.3.3.2.3) have been conducted using MACCS, the current, state-of-the-art computer code for assessing risks associated with postulated severe reactor accidents. Unlike CRAC, MACCS uses a linear cancer model based on the newer BEIR-V report. These evaluations suggest that latent fatality values in the FESs are an order of magnitude too low. Therefore, to account for this, the latent fatality results predicted from the FES values have been multiplied by a factor of 10 to obtain the final predicted latent fatality results in this GEIS.

Total population dose for an accident during each plant's relicensing period was also estimated by regression analysis. This dose includes the contribution from direct exposure to the radioactive cloud at the time of release as well as the longer-term effects from ground contamination. Table 5.9 shows the results of this (in person-rem/RY) along with an estimate of the respective average individual dose, in rem/RY, for each plant. Average individual doses were estimated by distributing the UCB total dose estimates from the regression analysis over the population within 150 miles (240 km) of the plant. Because it is virtually certain that people beyond this 150-mile radius would receive some incrementally small dose from an accident, attributing the total dose to the population within 150 miles will provide a conservative average individual dose estimate. For perspective, the annual average background dose to an individual from all other causes, including radon, is estimated as 3×10^{-1} rem per year.

Table 5.6 Predicted early and latent fatalities and dose estimates per reactor-year (RY) for all sites at their middle year of license renewal period, prior to incorporation of benchmark data.

Plant	Predicted UCB total early fatalities/RY (95% UCB)[a]	Nonnormalized predicted latent total fatalities/RY (95% UCB)	Nonnormalized predicted total dose (person-rem/RY) (95% UCB)
Arkansas	3.3×10^{-3}	1.7×10^{-2}	238
Beaver Valley	2.5×10^{-2}	1.3×10^{-1}	1720
Bellefonte	4.0×10^{-3}	1.0×10^{-1}	1335
Big Rock Point	2.7×10^{-3}	3.2×10^{-3}	48
Braidwood	3.6×10^{-3}	3.3×10^{-1}	4418
Browns Ferry	4.3×10^{-3}	9.7×10^{-2}	1446
Brunswick	3.5×10^{-3}	4.7×10^{-2}	704
Byron	2.3×10^{-3}	2.2×10^{-1}	2867
Callaway	6.9×10^{-4}	3.6×10^{-2}	509
Calvert Cliffs	1.8×10^{-3}	2.3×10^{-1}	2995
Catawba	1.7×10^{-2}	1.4×10^{-1}	1880
Clinton	3.0×10^{-3}	1.8×10^{-1}	2549
Comanche Peak	2.3×10^{-3}	3.3×10^{-2}	466
Cooper	2.6×10^{-3}	6.3×10^{-2}	955
Crystal River	1.5×10^{-3}	5.0×10^{-2}	700
D. C. Cook	8.4×10^{-3}	1.8×10^{-1}	2311
Davis Besse	1.4×10^{-3}	1.5×10^{-1}	2021
Diablo Canyon	1.5×10^{-3}	2.5×10^{-2}	346
Dresden	4.6×10^{-3}	1.4×10^{-1}	1991
Duane Arnold	8.0×10^{-3}	3.7×10^{-2}	561
Farley	1.5×10^{-3}	2.4×10^{-2}	334
Fermi 2	6.8×10^{-3}	1.9×10^{-1}	2722
FitzPatrick	3.8×10^{-3}	5.0×10^{-2}	728
Fort Calhoun	1.7×10^{-3}	8.0×10^{-3}	111
Ginna	3.9×10^{-3}	1.5×10^{-2}	203
Grand Gulf	2.8×10^{-3}	9.7×10^{-2}	1441
Haddam Neck (Connecticut Yankee)	1.2×10^{-2}	2.0×10^{-1}	2618
Hatch	2.6×10^{-3}	5.7×10^{-2}	855
Hope Creek	4.1×10^{-3}	2.5×10^{-1}	3604
Indian Point	6.5×10^{-2}	7.7×10^{-1}	9727
Kewanee	8.9×10^{-4}	2.2×10^{-2}	303
La Salle	3.6×10^{-3}	2.0×10^{-1}	2898
Limerick	1.1×10^{-2}	3.1×10^{-1}	4461

Maine Yankee	1.8×10^{-3}	3.0×10^{-2}	414
McGuire	1.0×10^{-2}	1.4×10^{-1}	1806
Millstone	2.5×10^{-2}	3.1×10^{-1}	3988
Monticello	4.1×10^{-3}	5.0×10^{-2}	730
Nine Mile Point	3.8×10^{-3}	6.7×10^{-2}	996
North Anna	9.4×10^{-4}	1.1×10^{-1}	1496
Oconee	1.1×10^{-2}	1.0×10^{-1}	1311
Oyster Creek	7.4×10^{-3}	1.5×10^{-1}	2125
Palisades	4.2×10^{-3}	1.3×10^{-1}	1691
Palo Verde	1.1×10^{-4}	2.6×10^{-2}	369
Peach Bottom	4.2×10^{-5}	2.0×10^{-1}	2950
Perry	6.9×10^{-3}	1.7×10^{-1}	2544
Pilgrim	3.7×10^{-3}	6.0×10^{-2}	873
Point Beach	2.5×10^{-3}	2.3×10^{-2}	309
Prairie Island	3.7×10^{-3}	1.7×10^{-2}	237
Quad Cities	4.5×10^{-3}	1.1×10^{-1}	1588
Rancho Seco	1.1×10^{-3}	1.3×10^{-1}	1723
River Bend	4.1×10^{-3}	8.0×10^{-2}	1168
Robinson	3.1×10^{-3}	7.0×10^{-2}	926
Salem	2.9×10^{-3}	5.0×10^{-1}	6059
San Onofre	1.1×10^{-2}	2.4×10^{-1}	3099
Seabrook	1.1×10^{-2}	6.0×10^{-2}	819
Sequoyah	6.6×10^{-3}	1.1×10^{-1}	1474
Shearon Harris	2.8×10^{-3}	7.3×10^{-2}	1001
South Texas	3.3×10^{-4}	8.0×10^{-2}	1065
Saint Lucie	3.2×10^{-2}	8.0×10^{-2}	1063
Shoreham	7.7×10^{-3}	6.3×10^{-2}	2724
Summer	1.3×10^{-3}	1.0×10^{-1}	1381
Surry	1.6×10^{-2}	9.0×10^{-2}	1200
Susquehanna	6.0×10^{-3}	2.8×10^{-1}	4010
Three Mile Island	2.8×10^{-2}	3.3×10^{-1}	4381
Trojan	3.7×10^{-2}	1.5×10^{-1}	1971
Turkey Point	6.0×10^{-2}	2.0×10^{-2}	278
Vermont Yankee	4.6×10^{-3}	9.0×10^{-2}	1314
Vogtle	1.6×10^{-4}	7.3×10^{-2}	983
WNP-2[b]	2.3×10^{-3}	4.3×10^{-2}	649
Waterford	1.4×10^{-2}	3.3×10^{-2}	477
Watts Bar	1.8×10^{-3}	1.2×10^{-1}	1540
Wolf Creek	4.7×10^{-4}	3.3×10^{-2}	466
Yankee Rowe	3.3×10^{-3}	6.7×10^{-2}	872

Zion	5.6×10^{-2}	1.8×10^{-1}	2379

[a]UCB = upper confidence bound. For description and explanation of these values, see Appendix G.
[b]WNP-2 = Washington Nuclear Project 2.Note: Multiply person-rem by 0.01 to find person-sieverts.

Table 5.7 Middle year of license renewal period (MYR) evaluation date and 10-mile exposure index (EI) for each licensed nuclear plant in the U.S.

Values are given in descending order

Plant	MYR evaluation date[a]	EI[b] (10 miles)
Indian Point	2030	18,959
Turkey Point	2030	17,852
Zion	2030	16,913
Trojan	2030	12,556
St. Lucie	2030	11,447
Limerick	2050	10,709
Three Mile Island	2030	10,327
Beaver Valley	2050	9,535
Millstone	2050	9,420
Catawba	2050	7,219
Surry	2030	6,796
Duane Arnold	2030	6,283
Waterford	2050	6,163
Shoreham	2050	5,915
Oyster Creek	2030	5,584
Haddam Neck (Connecticut Yankee)	2030	5,476
Seabrook	2050	5,234
Oconee	2030	5,184
San Onofre	2050	5,179
Perry	2050	5,020
Fermi 2	2050	4,919
McGuire	2050	4,919
D. C. Cook	2030	4,163
Susquehanna	2050	3,976
Sequoyah	2050	3,471
Palisades	2030	2,421
Vermont Yankee	2030	2,408
Dresden	2030	2,345
Bellefonte	2050	2,317
Ginna	2030	2,291
Quad Cities	2030	2,228
Prairie Island	2030	2,188
Braidwood	2050	2,126
Browns Ferry	2030	2,019

Yankee Rowe	2010	1,998
Arkansas	2030	1,993
Peach Bottom	2030	1,972
River Bend	2050	1,857
Salem	2050	1,808
Robinson	2030	1,889
Monticello	2030	1,832
Hope Creek	2050	1,807
Shearon Harris	2050	1,773
Point Beach	2030	1,612
Nine Mile Point	2050	1,568
FitzPatrick	2030	1,532
Comanche Peak	2030	1,518
Byron	2050	1,468
Pilgrim	2030	1,435
La Salle	2050	1,307
Maine Yankee	2030	1,246
Watts Bar	2050	1,241
Calvert Cliffs	2030	1,232
Brunswick	2030	1,195
Fort Calhoun	2030	1,155
Crystal River	2030	1,064
Farley	2050	1,021
Diablo Canyon	2050	1,020
Davis-Besse	2030	979
Summer	2050	902
Rancho Seco	2030	835
Clinton	2050	760
North Anna	2030	704
Kewanee	2030	671
Grand Gulf	2050	562
Callaway	2030	541
Big Rock Point	2030	476
Cooper	2030	411
Wolf Creek	2050	381
Hatch	2030	372
South Texas	2050	278
Vogtle	2050	141
WNP-2[c]	2050	134
Palo Verde	2050	96

[a]The renewal period evaluation year is the estimated midpoint of the renewal period for that plant conservatively rounded upward to the next year of available population data (MYR). Dates of license expiration were obtained from Table2.1. The maximum renewal period of 20 years was assumed.

[b]Value obtained by multiplying wind frequency in each of 16 compass sectors by population 0 to 10 miles (16 km)

from plant in that compass sector, then summing all products.
[c]WNP-2 = Washington Nuclear Project 2.

Table 5.8 Middle year of license renewal period (MYR) evaluation date and 150-mile exposure index (EI) for each licensed nuclear plant in the U.S.

Values are given in descending order.

Plant	MYR evaluation date[a]	EI[b] (150 miles)
Indian Point	2030	2,863,844
Limerick	2050	2,647,224
Susquehanna	2050	2,279,528
Shoreham	2050	2,014,947
Salem	2050	1,979,840
Oyster Creek	2030	1,970,098
Hope Creek	2050	1,955,878
Three Mile Island	2030	1,928,285
Yankee Rowe	2010	1,739,663
Haddam Neck (Connecticut Yankee)	2030	1,722,399
Braidwood	2050	1,615,088
Millstone	2050	1,510,698
Calvert Cliffs	2030	1,459,323
Peach Bottom	2030	1,453,860
Clinton	2050	1,418,383
La Salle	2050	1,396,350
Fermi 2	2050	1,287,935
Vermont Yankee	2030	1,286,085
San Onofre	2050	1,284,282
Byron	2050	1,214,624
Dresden	2030	1,193,394
Zion	2030	1,107,448
Davis-Besse	2030	1,104,797
D. C. Cook	2030	1,051,654
Palisades	2030	1,041,961
Beaver Valley	2050	1,021,547
Perry	2050	1,021,049
Rancho Seco	2030	992,605
Trojan	2030	944,628
Catawba	2050	914,688
McGuire	2050	890,305
North Anna	2030	876,587
Oconee	2030	867,675
Quad Cities	2030	854,803
Summer	2050	852,405
Surry	2030	846,246

Watts Bar	2050	798,733
Sequoyah	2050	769,140
Robinson	2030	738,770
Saint Lucie	2030	727,763
Shearon Harris	2050	688,554
Bellefonte	2050	678,549
Vogtle	2050	590,283
South Texas	2050	579,617
Crystal River	2030	573,211
Seabrook	2050	523,715
Browns Ferry	2030	491,751
Monticello	2030	487,606
Pilgrim	2030	486,154
Point Beach	2030	469,985
Kewanee	2030	440,217
River Bend	2050	432,680
Cooper	2030	428,471
Maine Yankee	2030	391,929
Grand Gulf	2050	388,245
Prairie Island	2030	375,227
Callaway	2030	373,564
Waterford	2050	370,569
Comanche Peak	2030	363,530
Wolf Creek	2050	363,380
Ginna	2030	357,773
Hatch	2030	347,873
Turkey Point	2030	345,115
Farley	2050	344,405
Duane Arnold	2030	329,426
Diablo Canyon	2050	302,887
Palo Verde	2050	290,395
Nine Mile Point	2050	273,322
FitzPatrick	2030	270,532
Arkansas	2030	265,479
Brunswick	2030	256,923
Fort Calhoun	2030	242,370
Big Rock Point	2030	136,942
WNP-2[c]	2050	132,195

[a] The renewal period evaluation year is the estimated midpoint of the renewal period for that plant conservatively rounded up to the next year of available population data (MYR). Dates of license expiration were obtained from Table2.1. The maximum renewal period of 20 years was assumed.

[b]Value obtained by multiplying wind frequency in each of 16 compass sectors by population 0 to 150 miles (240 km) from plant in that compass sector, then summing all products.

[c]WNP-2 = Washington Nuclear Project 2.

Table 5.9 Predicted dose estimate (total and average individual) per reactor-year (RY) for all sites at their middle year of license renewal (MYR)

Plant	Predicted UCB total dose 95% UCB[a] (person-rem/RY)	150-mile MYR population (in millions)	Predicted UCB average individual dose 95% UCB[b] (person-rem/RY)
Arkansas	238	4.1	6×10^{-5}
Beaver Valley	1720	15.6	1×10^{-4}
Bellefonte	1335	12.3	1×10^{-4}
Big Rock Point	48	2.3	2×10^{-5}
Braidwood	4418	20.5	2×10^{-4}
Browns Ferry	1446	8.6	2×10^{-4}
Brunswick	704	5.2	1×10^{-4}
Byron	2867	17.8	2×10^{-4}
Callaway	509	6.6	8×10^{-5}
Calvert Cliffs	2995	20.8	1×10^{-4}
Catawba	1880	13.8	1×10^{-4}
Clinton	2549	18.6	1×10^{-4}
Comanche Peak	466	8.8	5×10^{-5}
Cooper	955	5.4	2×10^{-4}
Crystal River	700	10.6	7×10^{-5}
D.C. Cook	2311	20.1	1×10^{-4}
Davis-Besse	2021	20.6	1×10^{-4}
Diablo Canyon	346	5.7	6×10^{-5}
Dresden	1991	18.9	1×10^{-4}
Duane Arnold	561	6.0	9×10^{-5}
Farley	334	5.7	6×10^{-5}
Fermi 2	2722	21.3	1×10^{-4}
FitzPatrick	728	6.1	1×10^{-4}
Fort Calhoun	111	3.6	3×10^{-5}
Ginna	203	5.8	4×10^{-5}
Grand Gulf	1441	6.2	2×10^{-4}
Haddam Neck (Connecticut Yankee)	2618	32.4	8×10^{-5}
Hatch	855	5.8	1×10^{-4}
Hope Creek	3604	35.5	1×10^{-4}
Indian Point	9727	35.7	3×10^{-4}
Kewanee	303	7.4	4×10^{-5}
La Salle	2898	19.1	2×10^{-4}
Limerick	4461	39.3	1×10^{-4}
Maine Yankee	414	7.6	5×10^{-5}

McGuire	1806	14.3	1×10^{-4}
Millstone	3988	32.6	1×10^{-4}
Monticello	730	5.9	1×10^{-4}
Nine Mile Point	996	6.2	2×10^{-4}
North Anna	1496	14.7	1×10^{-4}
Oconee	1311	14.1	1×10^{-4}
Oyster Creek	2125	34.0	6×10^{-5}
Palisades	1691	20.4	8×10^{-5}
Palo Verde	369	4.9	8×10^{-5}
Peach Bottom	2950	33.1	9×10^{-5}
Perry	2544	19.7	1×10^{-4}
Pilgrim	873	13.9	6×10^{-5}
Point Beach	309	7.4	4×10^{-5}
Prairie Island	237	6.5	4×10^{-5}
Quad Cities	1588	15.0	1×10^{-4}
Rancho Seco	1723	16.5	1×10^{-4}
River Bend	1168	7.9	1×10^{-4}
Robinson	926	11.9	8×10^{-5}
Salem	6059	36.1	2×10^{-4}
San Onofre	3099	23.6	1×10^{-4}
Seabrook	819	14.7	6×10^{-5}
Sequoyah	1474	12.9	1×10^{-4}
Shearon Harris	1001	11.8	8×10^{-5}
Shoreham	2724	36.0	8×10^{-5}
South Texas	1065	10.2	1×10^{-4}
Saint Lucie	1063	12.0	9×10^{-5}
Summer	1381	12.6	1×10^{-4}
Surry	1200	12.9	9×10^{-5}
Susquehanna	4010	36.0	1×10^{-4}
Three Mile Island	4381	29.3	1×10^{-4}
Trojan	1971	9.4	2×10^{-4}
Turkey Point	278	6.9	4×10^{-5}
Vermont Yankee	1314	20.9	6×10^{-5}
Vogtle	983	9.4	1×10^{-4}
WNP-2[c]	649	2.5	3×10^{-4}
Waterford	477	6.8	7×10^{-5}
Watts Bar	1540	13.4	1×10^{-4}
Wolf Creek	466	6.3	7×10^{-5}
Yankee Rowe	872	25.0	3×10^{-5}
Zion	2379	18.1	1×10^{-4}

[a]UCB = upper confidence bound. For description and explanation of these values see Appendix G.
[b]Obtained by dividing total fatalities by 150-mile population.
[c]WNP-2 = Washington Nuclear Project 2.

Note: Multiply person-rem by 0.01 to find person-sieverts; 150 miles = 240 km.

5.3.3.2.3 Benchmark Evaluations of the EI Methodology

Values for the consequences associated with nuclear power plant severe accidents have been taken from the FESs and used to establish the regressions and corresponding 95 percent UCBs presented in this chapter. As described previously, the FES values were calculated using the CRAC computer model. Using these regressions and the site-specific EI, UCB estimates for early and normalized latent fatalities and normalized total dose were obtained. As a means of assessing the performance of the EI methodology, two additional studies have been performed (Yambert and Linn 1992 and Tingle 1993). The primary goal of these studies was to demonstrate the accuracy of the EI methodology in predicting consequences associated with severe nuclear power plant accidents. In addition, insight gained from these evaluations was used to adjust values estimated using the EI regressions to reflect current, state-of-the-art calculation techniques.

The most direct means to perform this benchmarking would be to compare the outputs from CRAC used in the FESs with the output of the MACCS code, given identical inputs, for each of the FES plants. However, CRAC has undergone numerous revisions and a working version of the code used for the FES calculations is not available. Also, because the original CRAC input files for the FES plants were no longer available, detailed MACCS input files reflecting the FES plant inputs could not be created. Consequently, a direct comparison of the FES and MACCS output could not be made.

To bridge the gap between the FES values upon which the GEIS results were based and the MACCS code, CRAC2S was used to evaluate 72 hypothetical nuclear power plants. The first effort was to determine if CRAC2S would be an adequate surrogate for CRAC. Then CRAC2S and MACCS would be used to evaluate the 72 hypothetical sites and the results would be compared.

Benchmarking the CRAC2S code

A benchmark run was made using CRAC2S in order to verify its ability to satisfactorily reproduce the CRAC results found in the FESs. This was done by trying to match the input data sets for Indian Point Units 1 and 2 (Acharya and Blond n.d.). The data used in the CRAC2S main input file were identical to those used for the Indian Point CRAC main input file. However, the on-site meteorological data file used in the original Indian Point CRAC calculations was not available. In its place, meteorological data from the nearest monitoring station location, New York City, were used. The results of the benchmark found the early fatalities at Indian Point as calculated by the CRAC2S code were almost five times lower than the values calculated by CRAC. The values for latent cancers and total dose were almost identical. From these results, the staff concluded that the CRAC2S code could be used as a reasonable surrogate for CRAC in benchmarking it against the MACCS code.

Comparison of CRAC2S results to EI results for the hypothetical sites

Yambert and Linn (1992) created 72 hypothetical reactor sites. These sites were constructed by combining projected year 2030 population data for 9 existing reactor sites (5 PWR and 4 BWR) with actual meteorological data taken from 8 stations located across the U.S. The meteorological data were independent of the population data sites. Reactor locations for which population data were selected were chosen such that areas with high, medium, and low populations were represented. Similarly, the meteorological data were selected to represent a wide range of weather patterns (i.e., wet site, dry site, calm site, windy site, etc.). Values for early and normalized latent fatalities, and normalized total dose

were then calculated for each of these hypothetical PWR and BWR sites using the CRAC2S computer code.[5] These values were then compared to estimates obtained by applying the EI methodology to the 72 hypothetical sites.

Comparison of the two sets of estimates showed that in all cases, the consequence values calculated using CRAC2S fell below the corresponding 95 percent UCB limit predicted using the EI methodology. In the case of early fatalities, CRAC2S calculated values for PWRs averaged about 2 to 3 times lower than expected values predicted using the fitted EI regression line. This difference was greater for hypothetical BWR sites where CRAC2S calculated values averaged an order of magnitude less than the corresponding expected values from the EI regression. In addition, for a hypothetical site with a very low EI value (less than 100), the CRAC2S predictions were 4 orders of magnitude lower than the EI regression line. This large variability was attributed to the sensitivity of the CRAC2S code results to the number of persons located near the site, particularly in the 0 to 2 mile radius from the facility. The CRAC2S values for both normalized latent fatalities and normalized total dose were nearly identical to the EI fitted regression line for BWRs and were slightly below the regression line for PWRs.

The preceding paragraphs showed that the CRAC code can be adequately represented by the CRAC2S code and that the EI methodology (which is derived from values calculated by the CRAC code) predicts higher or equal consequences for all combinations of population and meteorology compared with the CRAC2S results. The final step was to compare the CRAC2S computations with the latest consequence code to determine if the CRAC2S values, and by inference, the EI methodology values, conservatively overpredict consequences when compared to the state-of-the-art consequence models and computation techniques.

A study was conducted at Brookhaven National Laboratory (Tingle 1993) which compared predictions made by the CRAC2S code to those of the MACCS code. MACCS is the consequence code currently supported by NRC for estimating consequences associated with severe reactor accidents. The Brookhaven study used MACCS to analyze the 72 hypothetical reactor sites (Yambert and Linn 1992).

Early fatality values calculated using MACCS for PWR sites were about a factor of 2 higher than those calculated by CRAC2S. For BWR sites the MACCS values were about a factor of 10 to 20 higher. Consequently, CRAC2S underpredicted MACCS early fatality values by a factor of 2 for PWR sites and a factor of 10 to 20 for BWR sites. However, the EI regression values overpredict the values for early fatality estimates from the CRAC2S code (which are based on CRAC analyses performed for the plants' FES) by factors of 3 for PWRs and 10 for BWRs. These results show that the early fatalities values estimated using the most advanced consequence computer code, MACCS, can be adequately predicted using the fitted EI regression methodology and are well within the 95 percent UCB determined by the EI regression. Consequently, the early fatality regression values shown in Table 5.10 are conservative estimates of this potential impact.

The values for total dose calculated by MACCS and CRAC2S were nearly identical, differing by no more than a factor of 2. This was the same result in comparing the CRAC2S and EI regression values. Thus, the EI regression can be used as an adequate predictor of population total dose due to a severe accident release.

For latent fatalities, the study showed some significant differences between the values predicted by the two codes. MACCS estimates for latent fatalities were consistently factors of 5-15 higher than estimates from the CRAC2S code. Since the CRAC2S values for latent fatalities were very close to the expected EI regression values, the EI regressions underestimate the current best estimates for latent fatalities by approximately a factor of 10. In order to enable the EI methodology to be an adequately conservative predictor of latent fatalities, this information was incorporated by taking the 95 percent UCB values as estimated from the EI regressions and increasing the values by a factor of 10. It is these increased values which are used in the GEIS. The adjusted latent fatality estimates are shown in Table 5.11.

5.3.3.2.4 Conclusion

As can be seen from the data in Tables 5.10 and 5.11, the risk of early and latent fatalities from individual nuclear power plants is small. It represents only a small fraction of the risk to which the public is exposed from other sources.

Even if the predicted early and latent fatalities from all 118 plants were considered (that is, the risk to the population of the United States from all 118 nuclear power plants), this would only result in a predicted risk of approximately one additional early fatality per year and approximately 30 additional latent fatalities per year, which is still a small fraction of the approximately 100,000 early and 500,000 latent cancer fatalities per year from other sources.

Table 5.10 Predicted early fatality estimates per reactor-year (RY) for all sites at their middle year of license renewal

Plant	Predicted UCB total early fatalities/RY (95% UCB)[a]
Arkansas	3.3×10^{-3}
Beaver Valley	2.5×10^{-2}
Bellefonte	4.0×10^{-3}
Big Rock Point	2.7×10^{-3}
Braidwood	3.6×10^{-3}
Browns Ferry	4.3×10^{-3}
Brunswick	3.5×10^{-3}
Byron	2.3×10^{-3}
Callaway	6.9×10^{-4}
Calvert Cliffs	1.8×10^{-3}
Catawba	1.7×10^{-2}
Clinton	3.0×10^{-3}
Comanche Peak	2.3×10^{-3}
Cooper	2.6×10^{-3}
Crystal River	1.5×10^{-3}
D. C. Cook	8.4×10^{-3}
Davis-Besse	1.4×10^{-3}
Diablo Canyon	1.5×10^{-3}
Dresden	4.6×10^{-3}
Duane Arnold	8.0×10^{-3}
Farley	1.5×10^{-3}
Fermi 2	6.8×10^{-3}
FitzPatrick	3.8×10^{-3}
Fort Calhoun	1.7×10^{-3}
Ginna	3.9×10^{-3}
Grand Gulf	2.8×10^{-3}
Haddam Neck	1.2×10^{-2}
Hatch	2.6×10^{-3}
Hope Creek	4.1×10^{-3}
Indian Point	6.5×10^{-2}
Kewanee	8.9×10^{-4}
La Salle	3.6×10^{-3}
Limerick	1.1×10^{-2}
Maine Yankee	1.8×10^{-3}

McGuire	1.0×10^{-2}
Millstone	2.5×10^{-2}
Monticello	4.1×10^{-3}
Nine Mile Point	3.8×10^{-3}
North Anna	9.4×10^{-4}
Oconee	1.1×10^{-2}
Oyster Creek	7.4×10^{-3}
Palisades	4.2×10^{-3}
Palo Verde	1.1×10^{-4}
Peach Bottom	4.2×10^{-3}
Perry	6.9×10^{-3}
Pilgrim	3.7×10^{-3}
Point Beach	2.5×10^{-3}
Prairie Island	3.7×10^{-3}
Quad Cities	4.5×10^{-3}
Rancho Seco	1.1×10^{-3}
River Bend	4.1×10^{-3}
Robinson	3.1×10^{-3}
Salem	2.9×10^{-3}
San Onofre	1.1×10^{-2}
Seabrook	1.1×10^{-2}
Sequoyah	6.6×10^{-3}
Shearon Harris	2.8×10^{-3}
Shoreham	3.3×10^{-3}
South Texas	3.2×10^{-3}
Saint Lucie	7.7×10^{-2}
Summer	1.3×10^{-4}
Surry	1.6×10^{-2}
Susquehanna	6.0×10^{-3}
Three Mile Island	2.8×10^{-2}
Trojan	3.7×10^{-2}
Turkey Point	6.0×10^{-2}
Vermont Yankee	4.6×10^{-3}
Vogtle	1.6×10^{-4}
WNP-2[b]	2.3×10^{-3}
Waterford	1.4×10^{-2}
Watts Bar	1.8×10^{-3}
Wolf Creek	4.7×10^{-4}
Yankee Rowe	3.3×10^{-3}
Zion	5.6×10^{-2}

[a]UCB = upper confidence bound. For description and explanation of these values, see Appendix G.
[b]WNP-2 = Washington Nuclear Project 2.

Table 5.11 Predicted latent fatality estimates per reactor-year (RY) for all sites at their middle year of license renewal (MYR)

Plant	Nonnormalized predicted UCB total latent fatalities/RY (95% UCB)[a]
Arkansas	1.7×10^{-1}
Beaver Valley	1.3×10^{0}
Bellefonte	1.0×10^{0}
Big Rock Point	3.2×10^{-2}
Braidwood	3.3×10^{0}
Browns Ferry	9.7×10^{-1}
Brunswick	4.7×10^{-1}
Byron	2.2×10^{0}
Callaway	3.6×10^{-1}
Calvert Cliffs	2.3×10^{0}
Catawba	1.4×10^{0}
Clinton	1.8×10^{0}
Comanche Peak	3.3×10^{-1}
Cooper	6.3×10^{-1}
Crystal River	5.0×10^{-1}
D. C. Cook	1.8×10^{0}
Davis-Besse	1.5×10^{0}
Diablo Canyon	2.5×10^{-1}
Dresden	1.4×10^{0}
Duane Arnold	3.7×10^{-1}
Farley	2.4×10^{-1}
Fermi 2	1.9×10^{0}
FitzPatrick	5.0×10^{-1}
Fort Calhoun	8.0×10^{-2}
Ginna	1.5×10^{-1}
Grand Gulf	9.7×10^{-1}
Haddam Neck (Connecticut Yankee)	2.0×10^{0}
Hatch	5.7×10^{-1}
Hope Creek	2.5×10^{0}
Indian Point	7.7×10^{0}
Kewanee	2.2×10^{-1}
La Salle	2.0×10^{0}
Limerick	3.1×10^{0}

Maine Yankee	3.0×10^{-1}
McGuire	1.4×10^{0}
Millstone	3.1×10^{0}
Monticello	5.0×10^{-1}
Nine Mile Point	6.7×10^{-1}
North Anna	1.1×10^{0}
Oconee	1.0×10^{0}
Oyster Creek	1.5×10^{0}
Palisades	1.3×10^{0}
Palo Verde	2.6×10^{-1}
Peach Bottom	2.0×10^{0}
Perry	1.7×10^{0}
Pilgrim	6.0×10^{-1}
Point Beach	2.3×10^{-1}
Prairie Island	1.7×10^{-1}
Quad Cities	1.1×10^{0}
Rancho Seco	1.3×10^{0}
River Bend	8.0×10^{-1}
Robinson	7.0×10^{-1}
Salem	5.0×10^{0}
San Onofre	2.4×10^{0}
Seabrook	6.0×10^{-1}
Sequoyah	1.1×10^{0}
Shearon Harris	7.3×10^{-1}
Shoreham	8.0×10^{-1}
South Texas	8.0×10^{-1}
St. Lucie	6.3×10^{-1}
Summer	1.0×10^{0}
Surry	9.0×10^{-1}
Susquehanna	2.8×10^{0}
Three Mile Island	3.3×10^{0}
Trojan	1.5×10^{0}
Turkey Point	2.0×10^{-1}
Vermont Yankee	9.0×10^{-1}
Vogtle	7.3×10^{-1}
WNP-2[b]	4.3×10^{-1}
Waterford	3.3×10^{-1}
Watts Bar	1.2×10^{0}
Wolf Creek	3.3×10^{-1}
Yankee Rowe	6.7×10^{-1}

Zion	1.8×10^{0}

[a]UCB = upper confidence bound. For description and explanation of these values, see Appendix G.

[b]WNP-2 = Washington Nuclear Project 2.

In addition, the prediction technique used was designed to overestimate the risk from reactor accidents. Table 5.12 illustrates this point by comparing--for the five NUREG-1150 plants--the early and latent risk values obtained from Tables 5.10 and 5.11 versus those from the NUREG-1150 analyses. In all cases the NUREG-1150 analyses predict lower risk values (one to five orders of magnitude) than the GEIS

prediction technique. Although some of the difference can be attributed to the fact that the NUREG-1150 results incorporated plant modifications discovered and corrected as a result of the NUREG-1150 analyses, some can also be attributed to the conservatism of the prediction technique used versus the more recent detailed analyses used for NUREG-1150.

Table 5.12 Comparison of predicted early and latent fatality estimates to NUREG-1150 findings

	Early fatalities		**Latent fatalities**	
Plant	**Table 5.10**	**NUREG-1150**	**Table 5.11**	**NUREG-1150**
Grand Gulf	2.8×10^{-3}/RY	1×10^{-8}/RY	9.7×10^{-1}/RY	9×10^{-4}/RY
Peach Bottom	4.2×10^{-3}/RY	3×10^{-8}/RY	2.0×10^{0}/RY	4×10^{-3}/RY
Sequoyah	6.6×10^{-3}/RY	3×10^{-5}/RY	1.1×10^{0}/RY	1×10^{-2}/RY
Surry	1.6×10^{-2}/RY	2×10^{-6}/RY	9.0×10^{-1}/RY	5×10^{-3}/RY
Zion	5.6×10^{-2}/RY	3×10^{-5}/RY	1.8×10^{0}/RY	8×10^{-3}/RY

Note: RY = reactor-year.

5.3.3.3 Dose and Adverse Health Effects from Fallout onto Open Bodies of Water

5.3.3.3.1 Methodology

Following a severe accident, a radiation hazard may exist from the deposition of airborne, radioactive fallout onto open bodies of water. Depending on the type of water body, this hazard may lead to internal exposure from the ingestion of contaminated water or from consuming contaminated aquatic fauna. External exposure may result from swimming in the contaminated water or from recreational activities on the shoreline. The extent of the hazard is largely determined by the proximity of individuals to the reactor, the areal extent of contamination, and the ability for interdiction to reduce the exposure hazard. The risk from this exposure at plants sited on all types of water bodies is compared with that of the Fermi plant, located on Lake Erie, for which an analysis has been completed for an uninterdicted dose (NUREG-0769, Addendum 1). The potential risk is also discussed for a dose with interdiction.

This section examines such radiation exposure risk at nuclear power reactors in the event of a severe reactor accident in which radioactive contaminants are released into the atmosphere and subsequently deposited onto open bodies of water. The drinking-water pathway is treated separately from the aquatic food, swimming, and shoreline pathways. The latter three pathways are addressed collectively, and the rationale for selecting only the aquatic food pathway for analysis is presented. In the case of the drinking-water pathway, environmental parameters at representative sites are compared with such parameters at the Enrico Fermi Atomic Power Plant, Unit 2, to arrive at some indication of comparative, uninterdicted hazard.

For the aquatic food pathway, the methodology in the Fermi analysis was used with site-specific data to arrive at a comparative population dose. The Fermi analysis applied the completely mixed lake model bottom sedimentation, so that sedimentation processes are accounted for in the residence times. Population dose estimates for both the drinking-

water and aquatic food pathways are compared with estimates from the atmospheric pathway. Analysis of the drinking-water pathway precedes that of the aquatic food pathway.

For the drinking-water pathway, sites adjacent to bodies of fresh water that can be used as a source of drinking water are considered. One estuarine site, which is not used as a source of drinking water, is examined for comparison purposes only. Direct deposition onto the surface water is the only pathway evaluated. The contamination of surface water bodies by the land erosion of atmospherically deposited radionuclides is not considered. One study concludes that risk from such a pathway is small compared with that of the atmospheric and terrestrial pathways (Helton et al. 1985). The study indicates that the contribution to latent facility from runoff to a great lake is less than 15 percent of what would be expected by direct deposit onto the lake. For both a great lake and a river, the expected latent facilities are only a small fraction of the latent fatalities predicted from land contamination. (Terrestrial pathways, including ingestion of crops, are considered in the atmospheric pathway in Section 5.3.3.2.)

Radioactive material released to the atmosphere tends to spread and disperse in air and dilute in water. The concentration of the contaminated material is thus related to the volume of contaminated air and water and meteorological and hydrological conditions at the time of release. These dilution processes reduce the intensity of the hazard downwind and downstream from the point of release but tend to increase the areal extent of the exposure hazard.

Several studies provide partial benchmarks that can be used to comparatively evaluate the surface water ingestion pathway at reactors located adjacent to bodies of fresh water. The Liquid Pathway Generic Study (LPGS) (NUREG-0440) examines surface water contamination via groundwater transport following a severe accident at a generic small river site, large river site, Great Lakes site, estuary site, coastal site, and dry site. Transport via groundwater to surface water bodies, however, is not directly applicable to the direct deposition pathway examined here. Results of the LPGS study indicate that the maximum individual total body dose associated with a severe core-melt accident for the small river site was one to two orders of magnitude higher than for the large river and Great Lakes site. The high values for the small river site were related to lower flow rates. Uninterdicted population drinking-water dose estimates calculated in the LPGS are as follows: large river site, 1.08×10^5 person-rem; small river site, 8.87×10^6 person-rem; and Great Lakes site, 2.34×10^6 person-rem.

Two analyses establish precedent for the direct-deposition, surface-water ingestion pathway. One (NUREG-0769, Addendum 1) is an estimate of risk performed for the Enrico Fermi Atomic Power Plant Unit 2. This assessment indicates that estimated individual and societal uninterdicted doses from the surface water pathway are of the same order of magnitude as interdicted doses from the airborne pathway. A whole body dose to an individual after a 3-year period of exposure was estimated at 0.8 rem. Interdiction comparable to that for the terrestrial pathway could substantially reduce this dose estimate and is equally likely. A second study for the Indian Point reactors (Codell 1985) developed empirical models based on considerations of radionuclide data associated with fallout from atmospheric weapons tests. A maximum 194 person-rem/RY whole-body uninterdicted dose via drinking water was estimated and compared with a maximum 2610 person-rem/RY whole-body dose from the direct airborne pathways. Although both latent and early fatality risks are associated with direct airborne pathways, only latent risks were found to be associated with the liquid (drinking-water) pathway because doses were well below the predicted rate and threshold for early fatalities or radiation illness.

Analyses in environmental documents prepared subsequent to the Fermi and Indian Point studies and the LPGS used results of these three studies as benchmarks. Representative conclusions from these documents are summarized here. Using site-specific parameters for the Perry plant (NUREG-0884), individual and societal latent cancer fatality risks from unrestricted use of Lake Erie were found to be about twice the risks from the Fermi reactor but the same order of magnitude as the air and ground pathways. For the Limerick plant (NUREG-0974), the small surface area of the nearby receiving water body (the Schuylkill River) relative to the total area of fallout is cited as the basis for concluding that the surface water pathway would be of small importance compared with the land pathway. The analysis for the Vogtle plant (NUREG-1087) qualitatively compares site-specific characteristics with those from both the Fermi and Indian

Point studies and concludes that the surface water pathway would be of little importance compared with the results from atmospheric fallout onto land.

Environmental parameters important for input in performing the above analyses, and for use in analyses of additional sites, are the surface area of the receiving body, the volume of water in the body, and the flow rate. In the absence of a rigorous site-specific analyses, these data can provide estimates of the extent of contamination in the receiving water body and the residence time of the contaminant in the affected water body. Comparing these estimates and site environmental parameters with those for Fermi can provide some indication of the comparative hazard associated with drinking contaminated surface water among sites and the need for site-specific analyses. Accounting for population and meteorological data in the comparison can provide further indication of relative risk among sites.

The method used for evaluating the direct-deposition surface water ingestion pathway compares water body surface area, volume, and flow rate data at plants for which analyses have not been performed with similar data used in the Fermi 2 analysis. Table 5.13 lists all plants by adjacent water body category. Type of plant site categories have been assigned consistent with the LPGS analysis. Plants were selected for analysis to represent the spectrum of environmental characteristics found at all plants; those not evaluated are considered to possess environmental characteristics within the range of those evaluated.

Table 5.13 Nuclear power plants by water body category

Estuary or coastal	Great lakes	Small river or impoundment		Large river
Diablo Canyon	Zion	Bellefonte	Vogtle	Grand Gulf
Crystal River	Fermi	Haddam Neck	Clinton	Trojan
Maine Yankee	Ginna	Braidwood	Quad Cities	WNP-2[a]
Seabrook	Perry	Dresden	Monticello	River Bend
Salem	Big Rock Point	Duane Arnold	Cooper	
South Texas	Palisades	Waterford	Shearon Harris	
San Onofre	Nine Mile Point	Prairie Island	Limerick	
St. Lucie	Kewaunee	Fort Calhoun	Three Mile	
Calvert Cliffs	Cook	McGuire	Island	
Hope Creek	FitzPatrick	Peach Bottom	Catawba	
Shoreham	Davis-Besse	Browns Ferry	Summer	
Surry	Point Beach	Arkansas	Oconee	
Millstone		Hatch	Sequoyah	
Turkey Point		Byron Station	Vermont	
Pilgrim		La Salle	Yankee	
Oyster Creek		Wolf Creek	Connecticut	
Brunswick		Yankee Rowe	Yankee	
Indian Point		Callaway	Robinson	
Shoreham		Beaver Valley	Watts Bar	
		Susquehanna	North Anna	
		Farley		

[a]WNP-2 = Washington Nuclear Project 2.

Nine Mile Point and Zion were selected to include Great Lakes other than Lake Erie. Zion was selected because, of those plants located near Lake Michigan, Zion's location near the southwestern shore of the lake would enable a large portion of a plume to be deposited onto the lake near a highly populated area. Trojan and Grand Gulf were selected to represent each of the two large rivers adjacent to plants. Because the LPGS analysis indicates higher population dose estimates for small rivers (NUREG-0440), a larger number of small river sites have been evaluated. Small river sites were selected to represent (1) a range of flow rates, (2) proximity to small rivers that are the only affected water body,

and (3) proximity to small rivers where other water bodies are also affected. An estuary site, in which the principal water body is not used as a source of drinking water, is included for comparison purposes only.

Great Lakes data as presented in the Fermi analysis are used in this evaluation. The assumptions used for determining river width, depth, and flow rate throughout the affected river reach are as follows: (1) large rivers and small rivers are uniformly 6- and 3-m (20- and 10-ft) deep, respectively, (2) river width at the reactor site is the same throughout the affected area, and (3) reported flow rate at the site is assumed throughout. Surface area and volume data for small lakes and reservoirs were obtained from federal and state agencies. In those cases in which part of a small lake is included in the affected area, the entire surface area and volume of the lake are included. As in the Fermi analysis, contaminant is assumed to be thoroughly mixed in the water body.

For the purposes of this analysis, it is assumed that essentially all atmospheric fallout occurs within 80 km (50 miles) of the reactor. For river sites, the "potentially" affected area includes all surface water bodies within 80 km (50 miles) of the reactor while the "likely" affected area assumes that only a limited portion of the potentially affected area is affected. (The likely affected area includes water body surface areas and volumes within 80 km of the reactor site and within 6 of the 22.5° compass sectors toward which the wind blows the greatest percentage of time.) All major surface water bodies are assumed to be sources of drinking water at the evaluation year (MYR). For Great Lakes and the estuary site, it is assumed that the adjacent water body is both the potentially and likely affected area. The potentially and likely affected populations at the MYR are obtained as above for the affected area. Data are presented in Tables 5.14a and 5.14b.

To facilitate comparison of environmental parameters and analysis those parameters among sites, selected data in Tables 5.14a and 5.14b are presented in histograms in Figures 5.8 through 5.11. The data included in the figures and a brief description of es of information provided by the figures follow. Figure 5.8 compares surface areas and water volumes of potentially affected areas. In addition to illustrating the smaller surface area of rivers available to receive fallout compared with the Great Lakes, these data provide some indication of relative dilution capacity (water volume) of the bodies of water. Figure 5.9 compares surface areas and water volumes of likely affected areas. These data further illustrate the smaller affected surface area and dilution capacity of rivers compared with the Great Lakes. Figure 5.10 depicts the three-order-of-magnitude spread in water body flow rate that contributes to additional dilution over longer time periods. Figure 5.11 compares estimated contaminant residence mes in the likely affected water bodies and the surface-area-to-volume ratios to provide some indication of the relative level of contamination per unit of water. The data in this figure (obtained by simple computation from data presented in previous figures) are the principal basis for comparison with the Fermi plant.

In addition to examining the drinking-water pathway, NUREG-0769 (1981) considers the aquatic food, shoreline, and swimming exposure pathways for the Fermi reactor. Since the principal uninterdicted, whole-body population dose in the Fermi analysis is derived from aquatic food (8×10^7 person-rem), as compared to drinking water (4×10^6 person-rem), shoreline (2×10^6 person-rem), and swimming (6×10^3 person-rem), the uninterdicted aquatic food pathway is examined. Particularly in the case of estuaries, aquatic food consumption constitutes the principal pathway of exposure.

Table 5.14a Comparison of Fermi 2 site data with data from other representative nuclear plants

Plant	Type of site[a]	Potentially affected surface area (m^2)	Potentially affected water volume (m^3)	Likely affected surface area (m^2)[b]	Likely affected water volume (m^3)[b]	Average flow rate (m^3/year)
Fermi	Lake	2.57×10^{10}	4.58×10^{11}	2.57×10^{10}	4.58×10^{11}	1.75×10^{11}
Beaver Valley	Small river	9.44×10^7	2.83×10^8	6.74×10^7	2.02×10^8	3.31×10^{10}
Braidwood	Small river	2.27×10^7	6.82×10^7	1.28×10^7	3.58×10^7	3.47×10^9

Browns Ferry	Small river	5.19×10^{8}	2.45×10^{9}	2.38×10^{8}	1.16×10^{9}	3.82×10^{10}
Byron Station	Small river	2.12×10^{7}	6.36×10^{7}	4.85×10^{6}	1.46×10^{7}	4.42×10^{9}
Callaway	Small river	1.24×10^{8}	3.73×10^{8}	6.41×10^{6}	1.92×10^{7}	1.17×10^{10}
Catawba	Small river	6.99×10^{7}	4.25×10^{8}	6.79×10^{7}	3.65×10^{8}	3.47×10^{9}
Clinton	Small river	1.03×10^{8}	4.71×10^{8}	3.20×10^{7}	1.33×10^{8}	2.21×10^{8}
Dresden	Small river	2.27×10^{7}	6.82×10^{7}	6.41×10^{6}	1.92×10^{7}	3.78×10^{9}
Duane Arnold	Small river	4.27×10^{7}	1.18×10^{8}	4.27×10^{7}	1.18×10^{8}	2.68×10^{9}
Grand Gulf	Large river	1.19×10^{8}	7.15×10^{8}	1.19×10^{8}	7.15×10^{8}	6.02×10^{11}
Hope Creek	Estuary	2.07×10^{9}	3.45×10^{10}	2.07×10^{9}	3.45×10^{10}	3.71×10^{11}
Limerick	Small river	6.03×10^{7}	1.81×10^{8}	1.28×10^{7}	3.85×10^{7}	1.70×10^{9}
McGuire	Small river	3.80×10^{8}	2.15×10^{9}	2.72×10^{8}	1.48×10^{9}	2.37×10^{9}
Monticello	Small river	5.46×10^{8}	3.45×10^{9}	5.46×10^{8}	3.45×10^{9}	4.10×10^{9}
Nine Mile Point	Lake	1.97×10^{10}	1.64×10^{12}	1.97×10^{10}	1.64×10^{12}	2.09×10^{11}
North Anna	Small river	6.59×10^{7}	6.81×10^{8}	6.08×10^{7}	6.66×10^{8}	3.15×10^{8}
Oconee	Small river	3.46×10^{8}	5.86×10^{9}	3.46×10^{8}	5.86×10^{9}	9.46×10^{8}
Prairie Island	Small river	5.70×10^{8}	3.53×10^{9}	5.70×10^{8}	3.53×10^{9}	1.34×10^{10}
Quad Cities	Small river	6.24×10^{7}	1.87×10^{8}	4.33×10^{7}	1.30×10^{8}	4.23×10^{10}
Robinson	Small river	9.40×10^{7}	5.08×10^{8}	1.51×10^{7}	5.63×10^{7}	1.58×10^{8}
Shearon Harris	Small river	1.17×10^{8}	1.11×10^{9}	8.64×10^{7}	1.01×10^{9}	2.78×10^{9}
Summer	Small river	3.33×10^{8}	3.35×10^{9}	6.79×10^{7}	4.19×10^{8}	5.36×10^{9}
Three Mile Island	Small river	4.71×10^{7}	1.41×10^{8}	4.71×10^{7}	1.41×10^{8}	3.04×10^{10}
Trojan	Large river	8.73×10^{7}	5.24×10^{8}	8.73×10^{7}	5.24×10^{8}	3.85×10^{11}
Vermont Yankee	Small river	6.20×10^{7}	1.86×10^{8}	6.20×10^{7}	1.86×10^{8}	7.73×10^{9}
Wolf Creek	Small river	1.50×10^{8}	6.41×10^{8}	7.04×10^{7}	2.05×10^{8}	1.42×10^{9}

Yankee Rowe	Small river	1.97×10^{8}	1.87×10^{9}	1.48×10^{7}	4.43×10^{7}	6.62×10^{8}
Zion	Lake	5.80×10^{10}	4.87×10^{12}	5.80×10^{10}	4.87×10^{12}	1.58×10^{11}

[a]As designated in Liquid Pathway Generic Study analysis (NUREG-0440).
[b]In the likely affected water body.

Note: Multiply square meters by 1.20 to find square yards; multiply cubic meters by 1.307 to find cubic yards.

Table 5.14b Comparison of Fermi 2 site data with data from other representative nuclear plants

Plant	Type of site[a]	Residence time (years)[b]	Surface area to volume ratio[b]	Potentially affected population[c]	Percentage of population likely to be affected	Average annual wind velocity (mph)	Average annual precipitation (inches)	
							Rain	Snow
Fermi	Lake	2.6×10^{0}	5.6×10^{-2}	6,647,763	41	8.9	31	31
Beaver Valley	Small river	6.1×10^{-3}	3.3×10^{-1}	4,169,673	48	9.3	36	46
Braidwood	Small river	1.1×10^{-2}	3.3×10^{-1}	5,092,832	43	10.3	30	24
Browns Ferry	Small river	3.0×10^{-2}	2.1×10^{-1}	926,918	13	8-12	47	3
Byron Station	Small river	3.3×10^{-3}	3.3×10^{-1}	1,141,541	38	9.9	18	34
Callaway	Small river	1.6×10^{-3}	3.3×10^{-1}	463,360	11	10.3	37	19
Catawba	Small river	1.1×10^{-1}	1.9×10^{-1}	2,337,775	13	6.9	42	56
Clinton	Small river	6.0×10^{-1}	2.4×10^{-1}	869,226	6	11.4	35	23
Dresden	Small river	5.1×10^{-3}	3.3×10^{-1}	7,453,539	17	9.7	33	37
Duane Arnold	Small river	4.4×10^{-2}	3.6×10^{-1}	754,825	46	8.0	33	31
Grand Gulf	Large river	1.2×10^{-3}	1.7×10^{-1}	504,930	18	7.7	50	2
Hope Creek	Estuary	9.3×10^{-2}	6.0×10^{-2}	5,424,373	26	8.9	40	23
Limerick	Small river	2.3×10^{-2}	3.3×10^{-1}	7,615,980	37	9.1	59	20
McGuire	Small river	6.2×10^{-1}	1.8×10^{-1}	2,543,485	23	6.9	43	6
Monticello	Small river	8.4×10^{-1}	1.6×10^{-1}	2,815,967	82	NA	24	42
Nine Mile Point	Lake	7.8×10^{0}	1.2×10^{-2}	811,475	9	10.0	34	88
North Anna	Small river	2.1×10^{0}	9.1×10^{-2}	1,478,490	61	6.8	44	16

Oconee	Small river	6.0×10^{0}	5.9×10^{-2}	1,311,318	20	7.6	53	NA
Prairie Island	Small river	2.6×10^{-1}	1.6×10^{-1}	2,961,583	79	6.3	25	44
Robinson	Small river	3.6×10^{-1}	2.7×10^{-1}	991,450	28	6.2	33	NA
Shearon Harris	Small river	3.6×10^{-1}	8.6×10^{-2}	2,122,597	49	4.6	36	NA
Summer	Small river	7.8×10^{-2}	1.6×10^{-1}	1,385,612	27	NA	45	2
Trojan	Large river	1.4×10^{-3}	1.7×10^{-1}	2,822,894	91	8.2	42	7
Vermont Yankee	Small river	2.4×10^{-2}	3.3×10^{-1}	1,709,869	45	7.8	43	60
Wolf Creek	Small river	1.4×10^{-1}	3.4×10^{-1}	273,225	35	10.3	31	15
Yankee Rowe	Small river	6.7×10^{-2}	3.3×10^{-1}	1,796,823	38	NA	NA	100
Zion	Lake	3.1×10^{1}	1.2×10^{-2}	8,199,956	10	NA	32	58

[a] As designated in Liquid Pathway Generic Study analysis (NUREG-0440).
[b] In the likely affected water body.
[c] Population projected for the middle year of license renewal (Table 5.5); 80-km (50-mile) radius from the site.

NA = Data not available.

Note: To convert mph to kph, multiply by 1.61; to convert inches to centimeters, multiply by 2.54.

Figure 5.8 Water body surface areas and volumes within 80 km (50 miles) of representative nuclear power plant sites (potentially affected water bodies).

Figure 5.9 Water body surface areas and volumes within 80 km (50 miles) of the reactor site and within six of the 22.5° compass sectors that exhibit the greatest percentage of time for which the wind blows toward that compass direction (likely affected water bodies).

Figure 5.10 Water body flow rate at representative nuclear power plant sites.

Figure 5.11 Contaminant residence time (flushing rate) and surface area-volume ratios for water bodies within an 80-km (50-mile) radius of selected nuclear power plants.

The process for examining the aquatic food pathway began with a comparison of edible aquatic food harvest data from major eastern U.S. and Gulf Coast estuaries, three Great Lakes, and generic large and small rivers. Sites were selected to include major aquatic food producing water bodies adjacent to plant sites. Data for East Coast estuaries, the eastern Gulf Coast, and the Great Lakes sites were obtained from the U.S. Department of Commerce (1980) and NUREG-0056. In the absence of site-specific data for river sites, generic aquatic harvest data from LPGS (NUREG-0440) were applied to a representative large and small river site. It is recognized that the quantity of aquatic food harvested from a water body varies temporally with the environmental quality of the water body. As in LPGS, it is assumed that 53 percent of the round weight of marine fish, 26 percent of the crustacea, and 28 percent of the freshwater fish are edible by humans. Mollusc data are reported in weight of edible meat. Recreational harvest data for molluscs and crustacea are unavailable and not included. While aquacultural harvests may be large locally [as much as about 3000

kg/ha in 1971 (2700 lbs/acre)], potential dose from this aquatic food source, like commercial harvests, is readily interdicted, and aquaculture harvest data are not included.

Many commercially and recreationally important marine fauna depend on the estuarine waters of the eastern Atlantic and Gulf Coasts for some portion of their life cycle. These include summer and winter flounder, striped bass, bluefish, alewives, black and rock sea basses, butterfish, croaker, weakfish, kingfish, shad, spot, menhaden, blackfish, mackerel, and shrimp. The presence of these fauna in an affected estuary for a few months and their subsequent migration from the estuary for later harvest elsewhere is acknowledged, although their contribution to the food pathway cannot be reasonably quantified and accommodated in the present analysis. However, compared with those organisms that are harvested in the estuary, the contribution of migratory fauna to estimates of dose and population risk is considered to be relatively small.

The modeling methodology in the Fermi analysis accounts for changes in radioactive nuclide concentrations in both sediment and surface water. The sediment model accounts for both the removal of radionuclides through sedimentation, as well as leaching back of the radionculides from the sediment into the water column. Surface water transport models are used to determine dispersing waterborne concentration functions, resulting in time-dependent water concentrations. The bioaccumulation approach is considered to be appropriate when the organisms have been in a reasonably constant concentration field for a period of sufficient duration for trophic and biological exchange processes to approach equilibrium. Since the time frame of interest for aquatic food concentrations extends up to 1 year, utilization of the various time-dependent waterborne radionuclide concentrations, when divided into periods of reasonably constant concentration, will provide reliable determinations of aquatic food concentrations of radioactive nuclides. A detailed discussion of the use of the bioaccumulation factor is provided in Appendix C of NUREG-0440, *Liquid Pathway Generic Study.*

Annual aquatic harvest data are compared with similar data used in the Fermi analysis to arrive at comparative estimates of whole-body population dose (assuming a constant source term among sites). From these data, estimates of population exposure and individual latent cancer fatality risk per RY are calculated as in the Fermi analysis. It is assumed that all of the edible aquatic harvest is consumed by humans, and a linear relationship between edible aquatic food harvest and population dose is assumed using data in the Fermi analysis for comparison.

Population exposure values are computed as the product of the projected population dose (scaled using the Fermi analysis), an assigned probability for an atmospheric release (about 2×10^{-5}; consistent with the Fermi analysis), and the probability of the wind blowing toward the water body. Probability estimates of deposition onto the water body are obtained from site-specific meteorological data, which provide the fraction of time the wind is blowing toward the water body.

5.3.3.3.2 Results

Results for the aquatic food pathway follow those for the drinking-water pathway. In the case of the drinking-water pathway, comparisons of each type of environmental data with those at Fermi and the implications of those comparisons with respect to surface water contamination are presented. Great Lakes and the estuarine site comparisons precede those for river sites.

For all sites evaluated, average annual precipitation and wind data are similar to those at Fermi, which suggests no appreciably different effects from meteorological conditions on fallout among sites. The surface areas of the estuarine and Great Lakes sites evaluated are the same order of magnitude or less than those of the Fermi plant, which indicates that these sites would receive less than or essentially the same proportion of contaminant as Fermi. For the other Great Lakes sites evaluated, water volume values nearly one order of magnitude greater than those of Fermi would result in significantly greater dilution. Because water volume is one order of magnitude lower for the estuarine site, less dilution would occur. Similar flow rates for the Great Lakes sites would not alter the comparative dilution capacity. A flow rate that is greater by an apparent factor of two for the estuarine site would suggest an increase in dilution. While it is acknowledged that the contribution of tidal flow to the overall flow rate is large, tidal flow may incompletely remove

contaminants, and a reasonable means of accommodating that phenomenon in the analysis is not available. Therefore, tidal flow is simply included with other flow data. Nine Mile Point exhibits a contaminant resident time that is a factor of 3 longer than that of Fermi; Zion has a residence time that is an order of magnitude greater than that of Fermi, and Hope Creek's is nearly 2 orders of magnitude less. Surface-area-to-volume ratios about a factor of 5 lower for Nine Mile Point and Zion suggest lower contaminant concentrations for these sites. Essentially the same surface-area-to-volume ratio for Hope Creek indicates a contaminant concentration similar to that of Fermi.

Comparisons of the estuary and Great Lakes site data with Fermi data indicate that contamination of these sites is of the same order of magnitude as Fermi. In the case of the Great Lakes sites, effects from longer comparative residence times are countered by lower surface-area-to-volume ratios (lower contaminant concentrations). Comparisons of those parameters for the estuarine site indicates much lower residence times than for Fermi and essentially the same contaminant concentration.

In the case of the river sites, the data corroborate the assumption that the surface area of the water body available to receive fallout is small compared with Fermi. Compared to Fermi, however, 2- to 3-orders-of-magnitude-lower water volumes for both small and large rivers result in a significantly reduced capacity for dilution in that portion of the river that receives fallout. Factors of 2 to 3 higher comparative flow rates for large rivers increase dilution capacity, whereas comparative 1- to 3-orders-of-magnitude-lower flow rates for small rivers contribute to further reduced dilution capacity. The ability of many river sites to remove contaminants rapidly is evident in the residence time data, the values of which are measured in days or weeks rather than years, as for the Great Lakes sites. Longer residence times for some small rivers are attributed to low flow rates proximity to small lakes. Comparatively higher surface-area-to-volume ratios for river sites indicate higher concentrations of contaminant in the affected portion of the river.

In contrast to the estuarine and Great Lakes sites evaluated--in which the data are amenable to direct interpretative comparison with the Fermi analysis--a direct comparison between river and Great Lakes systems does not yield viable results. Therefore, combinations of characteristics are utilized in arriving at data interpretations for river sites. While comparatively small portions of rivers may receive fallout, the concentration of contaminant in all river sites evaluated is essentially the same as or exceeds that of Fermi by as much as a factor of 6. Residence times for large rivers are more than 3 orders of magnitude less than for Fermi, while small river values vary from nearly 3 orders of magnitude less to more than a factor of 2 greater than for Fermi. Examination of the data in Table 5.14b indicates that certain small river sites could result in a combination of residence time and concentration that would exceed Fermi by a factor of 2 to 3; however, the potentially affected population is much smaller than at Fermi.

River sites that may receive relatively high concentrations of contaminant but which exhibit flow rates sufficient to enable the removal of contaminants within short periods of time (hours to several days) would reduce potential contaminant exposure time such that risk at these sites is likely to be bound by the Fermi analysis. However, such is not the case at all river sites, and they may not be bound by the Fermi analysis. These small river sites include the 13 (Table 5.15) with the following combined characteristics: (1) low on-site average annual flow rates, 2) comparatively long residence times, and (3) comparatively large surface-area-to-volume ratios.

However, particularly for these 13 sites, an estimate of the uninterdicted population dose per RY from drinking water may be made considering the Fermi value (4×10^6 person-rem). Using an estimated value of 2×10^{-5}/RY for the likelihood of release and a 0.445 probability of the wind blowing over the lake results in an estimated 36 person-rem/RY for Fermi. Assuming a 25 percent MYR increase in population, the uninterdicted person-rem per RY value would be approximately 45, which is less than 2 percent of the value from the atmospheric pathway (Table 5.6). Because combined residence time and surface-area-to-volume ratios for the 13 small river sites in Table 5.15 exceed values at Fermi by less than a factor of 3, and these sites have populations lower than Fermi by at least a factor of 2, the population dose at these sites would be expected to remain a small fraction of the value estimated for the atmospheric pathway. In addition, these sites are considered to be at least as amenable to interdictive measures as Fermi, which would further reduce population dose.

Table 5.15 Reactor sites that may not be bound by the Fermi 2 surface water analysis

Catawba	Clinton	North Anna
McGuire	Monticello	Robinson
Oconee	Prairie Island	Wolf Creek
Shearon Harris	Summer	
Yankee Rowe	Duane Arnold	

Results of the uninterdicted aquatic food pathway analysis are presented in Table 5.16, which compares estimated annual aquatic food harvest, population dose, and population exposure among sites. Because of conservative assumptions in several steps in the analysis, these values are considered to constitute upper bound value estimates. It is also assumed that the entire harvest is consumed by humans, which results in maximum population dose to those sites with the greatest harvest, independent of population. This assumption implies a linear relationship between harvest and population dose.

It can be seen in Table 5.16 that those sites with the greatest aquatic harvest result in the highest values of population exposure per RY. For most sites, population exposure estimates are well below those estimated for the atmospheric pathway (Table 5.6). For those with values that exceed the atmospheric pathway value, it is reasonable to expect that dose reduction would occur as a result of interdiction. Interdiction has the potential to reduce the dose by factors of from 2 to 10 (NUREG-0769, Addendum I; NUREG-0440, Table 7.3.2); accordingly, values of population exposure for all sites would be essentially the same as or significantly less than values from the atmospheric pathway.

Interdiction could consist of preventing use of the water or making contaminated food difficult to obtain. Thus, limiting people's contact with contamination through such measures as preventing or confiscating catches of recreational and commercial fish and shellfish, prohibiting water-based recreation, and eliminating surface water as a drinking-water source would have to be employed.

This type of interdiction might have to be long term because the residence times could be long in certain situations. The food pathway of ocean and estuarine sites would be the hardest in which to effect interdiction. Not only are the physical transport mechanisms of these systems complex, but many of the important recreational and commercial organisms are highly mobile. Thus, the ability of humans to obtain these organisms would need to be controlled.

5.3.3.3.3 Conclusion

Analyses for both the drinking water and aquatic food pathways have been performed with and without considering interdiction. In the case of the drinking-water pathway, the Great Lakes and the estuarine sites are bound by the Fermi analysis while small river sites with relatively low annual flow rates, long residence times, and large surface-area-to-volume ratios may potentially not be bound by the Fermi analysis. In all cases, however, interdiction can reduce relative risk to levels at or below that of Fermi and significantly below that for the atmospheric pathway. River sites that may have relatively high concentrations of contaminants but which remove contaminants within short periods of time (hours to several days) are amenable to short-term interdiction. A similar level of reduced risk can be achieved at those sites with longer residence times (months) by more extensive interdictive measures.

Table 5.16 Comparison of aquatic food harvest, uninterdicted population dose and exposure among representative sites

Plant	Water body	Annual edible aquatic food harvest (kg)[a]	Estimated population dose--whole body (person-rem)[b]	Population exposure per reactor-year (person-rem)[c]
Calvert Cliffs	Chesapeake Bay	3.0×10^8	7.1×10^8	5500
Crystal River	Gulf Coast	6.4×10^7	1.5×10^8	1400
Fermi	Lake Erie	6.7×10^7	1.6×10^8	1400
Hope Creek	Delaware Bay	8.1×10^7	2.0×10^8	270

Millstone	Long Island Sound	5.8×10^7	1.4×10^8	500
Nine Mile Point	Lake Ontario	1.8×10^7	4.2×10^7	300
Seabrook	Gulf of Maine	7.4×10^7	1.7×10^8	2100
Zion	Lake Michigan	2.7×10^7	6.4×10^7	650
Small river	Generic	2.2×10^4	5.2×10^4	0.4
Large river	Generic	2.0×10^4	4.7×10^4	0.4

[a]Includes combined commercial and recreational harvest estimates.
[b]Assumes linear relationship between aquatic harvest and population dose using data in Fermi analysis (NUREG-0769) as basis for comparison.
[c]Derived as in the Fermi analysis (NUREG-0769) using site-specific data to obtain wind probability values. For the river sites, meteorological data from those sites in the drinking-water pathway analysis with the highest likely/potentially affected surface area ratios were used.

Note: Multiply by 2.2 to convert kilograms to pounds; multiply by 0.01 to convert person-rem to person-sieverts.

For the aquatic food pathway, population dose and population exposure per RY are directly related to aquatic food harvest. For river sites, uninterdicted population exposure is orders of magnitude lower than that for the atmospheric pathway. For Great Lakes sites, the uninterdicted population exposure is a substantial fraction of that predicted for the atmospheric pathway but is reduced significantly by interdiction. For estuarine sites with large annual aquatic food harvests, dose reduction of a factor of 2 to 10 through interdiction provides essentially the same population exposure estimates as the atmospheric pathway.

For these reasons, population dose for the drinking-water pathway is found to be a small fraction of that for the atmospheric pathway. Risk associated with the aquatic food pathway is found to be small relative to the atmospheric pathway for most sites and essentially the same as the atmospheric pathway for the few sites with large annual aquatic food harvests.

5.3.3.4 Possible Releases to Groundwater

5.3.3.4.1 Methodology

This section discusses the potential for radiation exposure from the groundwater pathway as the result of postulated severe accidents at a nuclear reactor during the license-renewal period. Severe accidents are the only accidents capable of producing significant groundwater contamination.

For this pathway, the core is postulated to "melt down," breach the reactor vessel, and fall onto the reactor building floor. As a result of chemical energy and decay heat, the melted fuel reacts with the concrete floor. The basemat of the containment building is eventually breached, and molten core debris and radioactive water penetrate strata beneath the plant. The soluble radionuclides in the debris can be leached and transported with groundwater and contaminated reactor water to downgradient domestic wells used for drinking water or to surface water bodies used for drinking water, aquatic food, and recreation. In reality, the probability of such an accident is small. In general, the probable frequency of core melt is less than 10^{-4}/RY; however, some plants may have core damage frequencies that slightly exceed this value. From NUREG-1150, the conditional probability of basemat melt-through ranges from 0.05 to 0.24 occurrences per core melt. Therefore, it is reasonable and conservative to assume a 10^{-4} probability of occurrence of basemat melt-through per reactor-year for this analysis.

In this analysis, site-specific information on groundwater travel time; retention-adsorption coefficients; distance to surface water; and soil, sediment, and rock characteristics is compared with previous groundwater contamination analyses. Previous analyses are contained in LPGS and FESs.

First, uninterdicted doses received through the groundwater pathway are compared; however, the effects of interdiction are discussed later in this section.

Groundwater contamination due to severe accidents has been evaluated generically in LPGS (NUREG-0440). LPGS assumes that core melt and subsequent basemat melt-through occur and evaluates the consequences. LPGS examines six generic sites using typical or comparative assumptions on geology, adsorption factors, etc. Twenty-seven sites (hereafter called current sites) of the 74 nuclear power plant sites performed groundwater pathways analyses for FES and compared the results with the conclusions in LPGS. These comparisons indicate whether the current plant sites present significantly larger population doses than those calculated in LPGS. For the other 47 sites (hereafter called earlier sites) for which no groundwater pathway analyses were performed, this study compares the physical characteristics of each site with both the generic sites used in the LPGS study and the current sites.

The LPGS results are believed to provide generally conservative uninterdicted population dose estimates in the six generic plant-site categories. Five of these categories are site groupings in common locations adjacent to small rivers, large rivers, the Great Lakes, oceans, and estuaries. In a severe accident, contaminated groundwater could reach nearby surface water bodies and the population could be exposed to this source of contamination through drinking of surface water, ingestion of finfish and shellfish, and shoreline contact. Exposure by drinking contaminated groundwater is considered to be minor or nonexistent in these five categories because of a limited number of drinking-water wells. The sixth category is a "dry" site located either at a considerable distance from surface water bodies or where groundwater flow is away from a nearby surface water body. In this case, the only population exposure results from drinking contaminated groundwater. In each LPGS category, the generic site is a PWR that produces 1150 MW(e) and is located 457 m (1500 ft) from the nearest surface water (or from the boundary of the exclusion area in the dry site case).

In LPGS, five of the site categories (the dry site is the one exception) have the same generic groundwater characteristics. The groundwater velocity is 2.04 m/day (6.7 ft/day) and travel time to the nearest surface water is 0.61 year. The adsorption-retention factors (the products of these factors and the groundwater travel time are travel times of each isotope) for ^{90}Sr and ^{137}Cs are 9.2 and 83, respectively, and the corresponding amounts of each isotope reaching surface water (taking into account their radioactive decay rates) are 88 percent and 31 percent of the core-melt inventory, respectively. The groundwater velocity and travel time to the exclusion boundary of the dry site are 1.32 m/day (4.35 ft/day) and 0.95 year, respectively. In this case, the adsorption-retention factors

(retardation coefficients) for ^{90}Sr and ^{137}Cs are 28 and 253, respectively. All LPGS parameters were taken from the WASH-1400 study (NUREG-75/014).

A summary of uninterdicted population doses for LPGS generic wet sites is provided in Table 5.17. The largest LPGS drinking-water dose to the population is attributed to the small river site (8.9×10^6 person-rem). The largest total population dose is attributed to the estuarine site (1.8×10^8 person-rem), which is more than an order of magnitude greater than the next largest total population dose (9.9×10^6 person-rem) for the small river site.

In the following comparisons, current FES results are tabulated separately and by generic category for ease of comparison. A major objective of these comparisons is to establish whether the generic LPGS or current FES severe accident liquid pathway analyses provide conservative uninterdicted population dose estimates in each site category. According to LPGS (NUREG-0440), the generic liquid pathway uninterdicted dose estimates are one or more orders of magnitude lower than those attributed to the atmospheric pathway. Therefore, if the 27 current site FES dose estimates do not significantly exceed those of LPGS, the liquid pathway may also be considered an insignificant contributor to the population dose that could result from a severe accident for the plants. The remaining 47 earlier sites are then

placed into the appropriate categories and their physical characteristics are compared with those of the selected largest dose estimate site to determine if they also represent comparatively insignificant contributors to population dose.

Table 5.17 Summary of surrogate uninterdicted population doses for Liquid Pathway Generic Study base cases

Generic site[a]	Drinking-water dose (person-rem)[b]	Seafood ingestion dose (person-rem)	Shoreline exposure (person-rem)	Total (person-rem)
Large river	1.08×10^5	6.83×10^3	7.457×10^3	1.228×10^5
Small river	8.865×10^6	6.563×10^5	3.577×10^5	9.88×10^6
Great Lakes	2.34×10^6	6.369×10^5	4.066×10^5	3.540×10^6
Estuary	0	1.463×10^7	1.626×10^8	1.772×10^8
Coastal	0	5.348×10^5	2.36×10^3	5.372×10^5

[a] Data for the dry site are not provided.
[b] Multiply person-rem by 0.01 to find person-sieverts.

Source: NUREG-1054.

Note: These doses should not be accepted at face value, but should be used only for comparison with other sites.

5.3.3.4.2 Small River Sites

Table 5.18 compares results of current small-river plant sites (i.e., those with groundwater pathway analyses in their FESs) with the LPGS results. Beneath the name of each plant is its location, a brief description of the groundwater pathway, surface water bodies affected, and average stream flow rates past each plant site. Numerical tabulations include the estimated percentages of radionuclides ^{90}Sr and ^{137}Cs reaching the nearest downgradient surface water body as well as groundwater travel times and radionuclide adsorption-retention factors, which--together with radionuclide decay rates--were used to calculate these percentages. Also included are estimates of the magnitude of three potential uninterdicted population dose sources: drinking-water, finfish- and shellfish-ingestion, and shoreline-swimming exposure.

Population dose-estimate ratios (plant/LPGS) for drinking water, ingestion, and shoreline exposures are presented in the right-hand column of Table 5.18. These dose-estimate ratios are also based on the assumption of no interdiction. At face value, the majority of these dose-estimate ratios are several orders of magnitude less than 1. However, these dose-estimate ratios are sometimes based on parameters that may be nonconservative. There was also a lack of population dose information in FESs. Therefore, dose estimate ratios must be inferred from the percentage of radionuclides reaching surface water. At several sites, these ratios are near unity (i.e., the site and LPGS dose estimates are the same order of magnitude); at two sites (Byron Station and Clinton), ingestion dose ratios are significantly larger than unity (i.e., the site seafood ingestion dose is more than an order of magnitude greater than the corresponding LPGS dose).

Table 5.18 Current small river site severe accident liquid pathway analyses compared with Liquid Pathway Generic Study (LPGS) results

Average on-site flow rates less than 2830 m^3/s (100,000 ft^3/s)

Plant	Location and ground-water pathway	Distance from reactor to nearest downgradient surface water (m) [a]	Groundwater velocity (m/d) [a]	Groundwater travel time from reactor to surface water (years)	Adsorption - retention factor (Sr/Cs)	% radio -nuclide reaching surface water (Sr/Cs)	Drinking-water population (x 10^6)	Annual aquatic food catch (x 10^6 kg) [b]

LPGS	20 km SW of Oak Ridge, Tenn.--soil and weathered limestone to Clinch River, then to Tennessee, Ohio, and Mississippi rivers. Average flow rate is 50 m^3/second. [c]	457	2.04	0.6	9.2/83	88/31	0.62	1.2
Beaver Valley	40 km [d] NW of Pittsburgh, Pa.--terrace alluvial aquifer to Ohio River, then to Mississippi River. Average on-site flow rate of river is 1,050 m^3/second.	~137	0.03	12.3	9.2/83 [e]	6/0	NP [f]	NP
Braidwood	38 km SSW of Joliet, Ill.--pleistocene till and Pennsylvanian sandstone to Mazon River, then to Kankakee, Illinois, and Mississippi rivers. Average on-site flow rate of river is 110m^3/second.	5940 (Strip-mine area)	0.01	1780	1/1 [g]	0/0	NP	NP
Byron Station	27 km SW of Rockford, Ill.--through limestone to springs discharging to tributaries of Rock River, then to the Mississippi River. Average on-site flow rate of river is 140 m^3/second.	1100	0.12	24.7	1/1 [g]	56/57	2.1	9.6
Callaway	16 km SE of Fulton, Mo.--shallow limestone -sandstone aquifer to tributary of	~760	0.03	68.5	7.1/14.5	<1/~0	NP	NP

	Mud Creek, then to the Missouri and Mississippi rivers. Average on-site flow rate of river is 2000 m^3/second.							
Catawba	10 km NNW of Rock Hill, S.C.--through shallow fractures in granite to Lake Wylie, then to Catawba River and a set of lakes near Charleston, S.C. Average on-site flow rate of river is 110 m^3/second.	210	0.61	1.0	6/560	88/~0	0.43	3.0
Clinton	10 km E of Clinton, Ill.--sand lenses in glacial till to Lake Clinton, then to Salt Creek, Sangamon, Illinois, and Mississippi rivers. Average on-site flow rate of river is 7 m^3/second.	NP	NP	0.5	17/211 [h] 68/960 [i]	82/10 42/~0	2.1	7.0
Harris	32 km SW of Raleigh, N.C.--fractures in diabase (volcanic) rocks to cooling water reservoir, then to Cape Fear River and Atlantic Ocean. Average on-site flow rate of river is 88 m^3/second.	730	0.30	6.6	49/480	0.1/~0	NP	NP
Limerick	34 km NW of Philadelphia, Pa.--shallow fractures in sandstone/siltstone to Shuylkill River, then to the	240	0.20	3.3	20/193	18/~0	1.9	NP

	Delaware River, Delaware Bay and Atlantic Ocean. Average on-site flow rate of river is 54 m^3/second.							
South Texas	19 km S of Bay City, Tex.--wetlands to the Colorado River and the Gulf of Mexico (could have been classified as an estuary site).	4900 (Wetlands)	0.21	62.6	9.2/83 [c]	~0/~0	NP	NP
Summer	42 km NW of Columbia, S.C.--shallow fractures in igneous and metamorphic rocks to the Broad River, then to the Congaree River and Lakes Marion and Moultrie, then marshes and estuaries to the Atlantic Ocean. Average on-site flow rate of river is 170 m^3/second.	NP	NP	7.4	8.6/154	19/~0	~0.62	3.5
Susquehanna	11 km NE of Berwick, Pa.--lateral flow in fractured shale and Pleistocene-Holocene alluvium to a tributary of Lake Took-A-While, then to the Susquehanna and Delaware rivers to Delaware Bay and the Atlantic Ocean. Average on-site flow rate of river is 380 m^3/second.	NP	NP	9.2	35/500	0.2/~0	NP	NP

Vogtle	42 km SE of Augusta, Ga.--construction backfill to shallow limestone, discharge to springs feeding Mathes Pond, then to the Savannah River and Atlantic Ocean. Average on-site flow rate of river is 340 m^3/second.	850	0.15	15.3	21.5/165	0.05/~0	0.06	< 1.2
Wolf Creek	6 km NE of Burlington, Kans.--shallow limestone to cooling water reservoir, then to Neosho River (presumably), then through a series of Lakes to the Arkansas and Mississippi rivers. Average on-site flow rate is 45 m^3/second.	790	0.006	356.	9.2/83 [c]	~0/~0	NP	NP

[a]Multiply by 3.28 to convert to ft or ft/d.
[b]Multiply by 2.20 to convert to pounds.
[c]Multiply by 35.3 to convert to ft^3/second.
[d]Multiply by 0.625 to convert to miles.
[e]Assumed same value as used in the LPGS.
[f]NP = not provided.
[g]Highly conservative estimate (no adsorption).
[h]Conservative estimate.
[i]Realistic estimate.

However, the seafood ingestion dose at the generic small river site is only about 6 percent of the total generic population dose as shown in Table 5.17, and Byron Station's total population dose is about three times that of the LPGS generic site for small rivers. The dose-estimate ratios in Table 5.18 suggest that the Byron Station FES severe accident liquid pathway analysis provides the highest population dose groundwater pathway for sites located along small rivers. However, Byron Station's groundwater pathway population dose is less than an order of magnitude greater than the LPGS dose. Therefore, the FES groundwater pathway population dose for the small river category does not exceed that of the atmospheric pathway.

At 11 of the 27 current sites, the population doses were found to be essentially zero. In these cases, percentages of ^{90}Sr and ^{137}Cs reaching surface water are generally low, based on long groundwater travel times, large adsorption-retention

factors, or both. In some cases, the liquid pathway analysis was terminated without calculating population dose estimates. Most current FESs refer to Isherwood (1977), NUREG/CR-1596, or Parsons (1962) for representative adsorption data instead of acquiring site-specific data.

In contrast, the Byron Station liquid pathway analysis (citing a lack of site-specific adsorption data) used the highly conservative assumption that neither ^{90}Sr nor ^{137}Cs was adsorbed and that these isotopes would be transported at the same velocity as groundwater. As a result, the analysis shows that more than half the Byron Station severe accident inventory of ^{90}Sr and ^{137}Cs would reach surface water. Consequently, dose sources and estimates were found to be high.

In NUREG-1054, Codell recommends caution in using adsorption data to characterize the groundwater pathway through fractured rock. In cases involving groundwater pathways in open fractures that were not accounted for, the adsorption-retention factors and groundwater velocity may have been significantly overestimated and underestimated, respectively, leading to nonconservative (low) population dose estimates. Current FESs for Callaway, Harris, Limerick, Summer, Vogtle, and Wolf Creek all cite low groundwater velocities (site-specific data) or large adsorption-retention factors (literature values as cited previously) as well as groundwater pathways in fractured rock. Therefore, because it was not clear whether these sites were bound by the Byron Station population dose estimates, they were investigated further. However, the Summer and Vogtle sites have much smaller drinking-water populations and seafood catches than Byron Station. So, even if no adsorption were assumed for these two sites, their dose estimates would not be likely to exceed those of Byron Station.

The Callaway, Harris, Limerick, Summer, Vogtle, and Wolf Creek FSARs contain liquid pathway analyses for a postulated rupture of a liquid radioactive waste tank. Each of these plants is discussed further in the following paragraphs.

In four cases (Callaway, Harris, Limerick, and Vogtle), the FSAR findings are compatible with those of corresponding FESs. Furthermore, it is clear from the Limerick FSAR that the fracture pathway is not a significant liquid conduit (runoff water from Hurricane Agnes had to be pumped from the Limerick open excavation because it did not drain through the fractured rock). It is assumed in the Vogtle FSAR that fractured limestone drains freely, but it has been adequately demonstrated that radionuclides are sufficiently retained by an extensive construction fill between the radioactive waste tank and the limestone. Fractured volcanic rocks have been identified as groundwater conduits in the Harris FSAR, but the groundwater velocity and radionuclide retardation values for these rocks are not significantly different from those listed in the FES; and in the Callaway FSAR, unfractured sandstone, rather than a fractured limestone, has been identified as the primary groundwater pathway.

In one case (Summer), the FSAR analysis is inconsistent with that of FES. The Summer FSAR identifies the groundwater pathway as weathered rock without clay minerals and gives no credit for cation exchange (adsorption-retention factor = 1); however, in FES, adsorption-retention factors are 8.6 and 154 for strontium and cesium, respectively. Based on FSAR's conservative adsorption estimate, 77 percent of the strontium and cesium would reach surface water (about 50 percent more radionuclides than at Byron Station), rather than 19 percent strontium and < 1 percent cesium as estimated in the FES. Based on FSAR data, Summer's plant-LPGS drinking-water dose ratio would be between 3 and 4, rather than 0.9 as listed in Table 5.18. However, the drinking water population and aquatic catch estimates are less than those of Byron Station by about a factor of 3. Therefore, the conservative analysis for Summer and LPGS result in roughly similar population doses that are less than that at Byron Station.

In one case (Wolf Creek), the FSAR analysis is not sufficiently detailed to permit a direct comparison with FES. The Wolf Creek FES groundwater velocity estimate is extremely low compared with those of other small river sites [0.006 m/day (0.0065 yd/day) compared with 0.01 to 0.6 m/day (0.012 to 0.65 yd/day) for other sites]. All but one site reported groundwater velocities at least an order of magnitude greater than that at Wolf Creek. Therefore, Wolf Creek's estimated groundwater velocity may be unreasonably low. Based on this low groundwater velocity, FES concludes that less than 1 percent of the radionuclide inventory in a core-melt accident would reach surface water.

The Wolf Creek liquid pathway dose estimates have been recalculated, based on a higher groundwater velocity. It was assumed that the groundwater velocity at Wolf Creek may be similar to that at South Texas [0.21 m/day (0.23 yd/day)] where the terrain is similarly flat. If one assumes no retardation of radionuclides at Wolf Creek, 80 percent of the radioactive strontium would reach surface water before decaying--about 1.5 times more than at Byron Station. However, Byron Station has a larger downstream population dose (St. Louis and Memphis for Byron Station compared with Fort Smith and Little Rock, Arkansas, for Wolf Creek). The Mississippi River between St. Louis and its confluence with the Arkansas River has a greater fish catch. Therefore, for this Wolf Creek analysis, population dose is considered to be comparable to that at Byron Station (the largest groundwater pathway population dose estimate for small rivers).

In general, sites that are located on a floodplain or on glacial till may be expected to produce dose estimates that are lower than those for the LPGS case, assuming that the melted reactor core does not reach bedrock beneath the site (resulting in a groundwater pathway through fractured rock). Low groundwater gradients on floodplains and low hydraulic conductivity in glacial till (with the exception of glacial outwash deposits) generally result in low groundwater velocities. Furthermore, significant percentages of clay minerals are generally available for radionuclide adsorption in both floodplain deposits and glacial till. Beaver Valley, Braidwood, Clinton, South Texas, and possibly Susquehanna are representative of sites on floodplains or glacial till.

Table 5.19 compares earlier small river sites (i.e., sites without FES groundwater pathway analyses) with the Byron Station and LPGS generic small river sites. Because no severe accident pathway analyses were provided for the earlier sites, reactor size, distance from the reactor to the nearest downgradient surface water, and river flow rates are the only parameters directly comparable to the current site analysis. The total downstream population at risk (all municipalities along the river from the plant-site to the sea) is an indicator of potential drinking-water, ingestion, and shoreline exposures for these sites. No groundwater travel times or adsorption-retention factors are available for these sites.

Cooper, Farley, Fort Calhoun, Hatch, and Quad cities are sites listed in Table 5.19 that most likely would not exceed the Byron Station or LPGS dose estimates because of their locations on thick floodplain or coastal plain sediments. Groundwater pathways through fractured rock or Pleistocene outwash deposits are unlikely at these sites. Floodplains and coastal plains are expected to have low groundwater velocities (because of low groundwater gradients) or relatively high adsorption-retention factors (because of high clay content), or both.

The other sites in Table 5.19 have large populations downstream at risk and are located on either fractured rock or a Pleistocene aquifer (suggesting the presence of outwash deposits) or have a groundwater pathway that is not well known. Groundwater velocities may be higher than those at Byron Station, and adsorption cannot be relied upon to delay entry of ^{90}Sr and ^{137}Cs into nearby surface water. Therefore, uninterdicted doses at some of these sites may significantly exceed those at Byron Station. It is uncertain whether all small river site groundwater pathway population doses without interdiction would be less than that of the atmospheric pathway.

5.3.3.4.3 Large River Sites

Table 5.20 compares current large river plant sites with the LPGS generic large river site. The format for this table is the same as that for Table 5.18. The Grand Gulf and River Bend plants are located far from the Mississippi River shoreline but on its floodplain where the groundwater velocity is expected to be low and floodplain sediments would be expected to adsorb radionuclides to some extent. The River Bend site analysis was based on conservative estimates of adsorption-retention factors, and the resulting plant-LPGS population dose ratio is 0.39. The adsorption-retention factors for Grand Gulf are higher; however, using the same adsorption-retention factors for Grand Gulf as for River Bend would not have produced significantly higher doses. Therefore, the dose-estimate ratios

in Table 5.20 suggest that the LPGS generic site analysis provides the largest uninterdicted population dose estimate for large rivers, at least for sites with locations similar to those of Grand Gulf and River Bend.

The Washington Nuclear Project 2 (WNP-2) site in Table 5.20 differs from the other two sites in that the assumed groundwater velocity is higher than that used in LPGS. However, the adsorption-retention factors for WNP-2 appear to be nonconservative. If conservative adsorption-retention factors similar to those of Grand Gulf and River Bend are used for WNP-2, an estimate of the population dose can be made (Portland, Oregon, is downstream of the WNP-2 site). The staff's conservative analysis for WNP-2 (using adsorption and drinking-water dose

from River Bend and aquatic catch from Grand Gulf) yields a total population dose of 1.5 times that of the LPGS for large rivers. The difference in the conservative WNP-2 and LPGS groundwater pathway population doses is small in comparison with the order of magnitude greater atmospheric pathway population dose.

Table 5.21 compares the only earlier large river plant site (Trojan) with the LPGS generic large river site. This site is located much closer to the nearest downgradient surface water (the Columbia River) than is the generic site, and fractured rock underlies the site, suggesting that the groundwater travel time may be less than that of the LPGS. Therefore, the uninterdicted dose from the Trojan Plant would probably be less than that of the LPGS study.

Table 5.21 Earlier large river sites without severe accident liquid pathway analyses compared to the Liquid Pathway Generic Study (LPGS) results

Average on-site flow rates greater than 2830 m^3 /second (100,000 ft^3 /second)

Plant	Location and ground-water pathway	Reactor size [MW(e)]	Distance from reactor to nearest downgradient surface water (m)[a]	Average/river flow rate (m^3/second)[b]	Downstream population at risk x 10^6 (1988)
LPGS	On the lower Mississippi River.	1150	457	13,900	1.9
Trojan	48 km[c] NW of Portland, Oreg.--soil and shallow fractured rock to the Columbia River, then to the Pacific Ocean.	1130	~90	12,200	0.1

[a]Multiply by 3.28 to convert to ft.
[b]Multiply by 35.3 to convert to ft^3/second.
[c]Multiply by 0.625 to convert to miles.

5.3.3.4.4 Great Lakes Sites

Table 5.22 compares current Great Lakes plant sites with the LPGS generic Great Lakes site. These sites are all located on or adjacent to flat Pleistocene lake bed sediments which underlie modern lake sediments and shorelines. These sediments generally have a high clay and silt content. Groundwater passing through fractured rock must also pass through these lake-bed sediments before reaching the lake. Therefore, groundwater gradients and groundwater velocities are expected to be low, and adsorption-retention factors are expected to be high relative to those of the generic site. However, the current sites have larger populations at risk (the generic site is on Lake Ontario, the farthest downstream of the string of Great Lakes) and are closer to the shoreline than the Great Lakes generic site. Taking all these factors into account yields dose-estimate ratios between 0 for Nine Mile Point and 1.4 for Fermi (the latter site has, by far, the largest drinking water population). Therefore, the severe accident liquid pathway analysis for the Fermi site provides the largest uninterdicted population doses for current FES sites adjacent to the Great Lakes. The differences between groundwater population doses for the Fermi and LPGS sites are small in comparison with differences in atmospheric pathway doses for the sites.

Table 5.23 compares earlier Great Lakes sites with the Fermi and LPGS generic Great Lakes sites. Populations at risk at sites near standing bodies of water (lakes, estuaries, and oceans) are defined as all people living within 80 km (50 miles) of the site, rather than as all people living downstream from a river site. Geologic conditions at these sites are

similar to those of the current plant sites described in Table 5.22. Although some of these sites have groundwater pathways through Pleistocene outwash and fractured rock, groundwater must also pass through lake-bed sediments before reaching the lake. The Zion site is comparable to Fermi in size, distance from shoreline, and population within 80 km. Therefore, Zion's population doses would probably be similar to those of Fermi. All other sites would have population doses lower than those of Fermi, based on smaller reactor sizes, greater distances to shoreline, and lower populations within 80 km. Therefore, groundwater pathway population doses at all Great Lakes sites are expected to be less than or equal to that of the Fermi site.

5.3.3.4.5 Ocean Sites

Table 5.24 compares current ocean plant sites with the LPGS generic ocean site. The Seabrook severe accident liquid pathway analysis has the largest estimated uninterdicted population doses for sites adjacent to the ocean. Based on short groundwater travel time and low adsorption-retention factors, nearly all the strontium inventory (94 percent) and more than half the cesium inventory (58 percent) reaches the Gulf of Maine, compared with LPGS generic estimates of 88 percent and 31 percent, respectively. These percentage comparisons suggest that a severe accident at Seabrook has the potential for producing a larger maximum individual dose than that of the LPGS generic ocean site. In consideration of the large annual seafood catch and shoreline user rates, the uninterdicted total population dose estimate for Seabrook is 6 times that of the LPGS generic ocean site. Seabrook's estimated groundwater pathway population dose is still below that of the atmospheric

pathway but at a reduced level of confidence.

Table 5.25 compares earlier ocean plant sites with both the LPGS generic and Seabrook ocean sites. The Seabrook reactor is the largest in Table 5.25. This reactor is also closest to the shoreline and has a large nearby population comparable to that of the Pilgrim site. However, the Pilgrim reactor is little more than half the size of Seabrook and, thus, may have a population dose roughly half that of Seabrook. The Diablo Canyon reactor is roughly comparable to Seabrook in size and distance from shore but has only one-tenth the population within 80 km. Furthermore, the sandstones and volcanic rocks at Diablo Canyon may have higher adsorption-retention factors than the quartzite and granite at Seabrook. Therefore, Diablo Canyon's potential population dose is expected to be at least 1 order of magnitude less than that of Seabrook and also less than that of the LPGS generic ocean site. Turkey Point is located on a flat coastal plain where the groundwater gradient is expected to be low; hence, groundwater velocity and travel time are expected to be correspondingly low and high, respectively, with respect to Seabrook. The Turkey Point reactor is located about the same distance from the shoreline as is the LPGS generic site and four times farther inland than Seabrook. However, a barge canal is less than 50 m (164 ft) from Unit 3. Interdiction at Turkey Point could be accomplished by closing off or filling in the barge canal. Thus, based on the above site-specific assumptions, it can be concluded that Seabrook represents the largest uninterdicted population dose at ocean sites other than Turkey Point.

5.3.3.4.6 Estuarine Sites

Table 5.26 compares current FESs for which groundwater pathway analysis is available with the LPGS generic estuarine site. There is only one estuarine site (Hope Creek) for which a current FES is available. However, a detailed severe accident liquid pathway analysis is also available for the Indian Point site (ConEd 1982).

Hope Creek's estimated uninterdicted total population dose is less than 1 percent of the LPGS generic dose for estuaries. The LPGS annual aquatic catch and shoreline use are 3 and 83 times, respectively, as large as Hope Creek's. Even if 100 percent of Hope Creek's strontium inventory reaches surface water, the LPGS population dose would not be exceeded.

Indian Point's estimated uninterdicted population doses vary from insignificant to 0.44 times that of the LPGS, depending upon the magnitude of the assumed strontium and cesium adsorption-retention estimates. The first Indian Point estimates in Table 5.26 are from Consolidated Edison (ConEd) (1982). These dose estimates are very low (from 1.5×10^5 to 4.9×10^5) compared with the LPGS generic estuarine dose estimate (1.8×10^8) in Table 5.26. ConEd's

adsorption-retention factors for strontium and cesium are 270 and 1626, respectively, compared with 9.2 and 83 for the LPGS case. The very large adsorption-retention factors at Indian Point are based on the assumption that groundwater flow is through intergranular pore spaces in rock with very low porosity (0.5 percent). ConEd's groundwater flow assumption may be nonconservative because flow is more likely to occur through open fractures rather than intergranular pore spaces. Other

parameters (reactor size, groundwater travel time, aquatic catch, and shoreline user-hours) are roughly comparable for Indian Point and the LPGS.

The second set of Indian Point estimates in Table 5.26 is based on a conservative assumption used in this analysis. Indian Point's reactor foundations are located on highly fractured (brecciated) limestone, and some of these fractures are open (ConEd). If the primary groundwater flow is through open fractures, the effective porosity of the fractured rock may range between 0 percent and 20 percent. Assuming that the effective porosity is 10 percent, adsorption-retention factors for strontium and cesium are about 13.5 and 82, respectively. These Indian Point adsorption-retention factors are comparable to those for the LPGS case and those for Seabrook (Table 5.25), which is also located on fractured rock. The staff analysis also uses ConEd's most conservative value of the hydraulic conductivity (0.122 m/day). Indian Point's aquatic, shoreline, and total population doses are 1.1, 0.38, and 0.44 times the respective LPGS generic estuary doses based on this second analysis.

Table 5.27 compares earlier FESs with the LPGS generic site for estuaries. The Salem reactor adjoins Hope Creek, and its estimated population dose is expected to be similar. All other sites have smaller reactors, have smaller nearby populations, or are located farther from surface water. All but Maine Yankee and Indian Point are located on coastal plains or alluvial sediments having at least some clay minerals in them, and coastal plain sites have low groundwater velocities and relatively high adsorption-retention factors. None of these sites should exceed the LPGS population dose for estuaries.

5.3.3.4.7 Dry Sites

Table 5.28 compares current dry plant sites with the LPGS generic dry site. Only one site (Palo Verde) provides significant information on which a comparison could be based. Palo Verde is located in a desert valley where the groundwater gradient and velocity are expected to be low. Alluvium in the groundwater pathway should have adsorption-retention factors comparable to those of the LPGS (if not greater, as indicated in Table 5.28). In contrast, the LPGS generic site is on the Snake River plain above the Snake River Canyon. Fractured volcanic rocks and Pleistocene glacial and alluvial sediments underlie the LPGS generic site. Accordingly, the groundwater gradient and velocity at the LPGS site are extraordinarily high, and the groundwater travel time is low. Even without adsorption, strontium would require five times as long to reach the Palo Verde site boundary as in the LPGS generic case. Because of its location on the Snake River plain, the LPGS site's uninterdicted population dose is believed to represent the largest dose for dry sites. Therefore, all dry sites are expected to have significantly lower groundwater pathway population doses than those of the atmospheric pathway.

Table 5.29 compares the only earlier dry site (Rancho Seco) with the Palo Verde and LPGS generic dry sites. As seen in the table, the Rancho Seco and Palo Verde sites are strikingly similar. The only significant difference is that the Rancho Seco reactor is only three-fourths as large as those of Palo Verde. Therefore, a severe accident at Rancho Seco is expected to produce a population dose similar to or less than that at Palo Verde.

5.3.3.4.8 Results

Table 5.30 summarizes sites having uncertain groundwater pathway population doses compared with the LPGS study or other FES groundwater analyses. All but two of these sites are along small rivers. Uncertain groundwater pathways were the greatest concern.

Fractured rock, solution cavities in limestone, weathered rock, incompletely described geologic conditions, and the uncertain character of glacial or Pleistocene deposits are important geologic concerns. Several sites have large nearby populations, one is unusually close to surface water, and another is close to a stream with very low average flow rate.

The above liquid pathway analyses can be considered representative of uninterdicted population doses from a severe accident during the initial 40-year operating term. Liquid pathway population dose estimates at MYR would be smaller for a few plants, 10 to 30 percent higher for the majority of plants, and perhaps 50 percent higher for a few plants because of the general increase in population over a 50-year time interval beyond the FES analysis. Assuming such increases in population are representative of liquid dose increases, their effect on the results would be insignificant in relation to other uncertainties in the liquid pathway analysis.

However, it should be recognized that the uncertainty factor for liquid pathway uninterdicted population dose estimates in Tables 5.17 through 5.28 may be 10 or more. Codell (1985) does not recommend that these values be accepted at face-value; rather, they should be used for comparative purposes only (NUREG-1054). As stated previously, several parameters that are needed to perform a liquid pathway analysis (i.e., porosity, hydraulic conductivity, and adsorption coefficient) are not known with sufficient precision to provide better than order-of-magnitude estimates of population doses.

The LPGS and FES liquid pathway analyses (described above) provide uninterdicted population dose estimates based on the assumptions that core meltdown and penetration of the basemat have taken place. Such analyses are deterministic (i.e., they assume that the worst-case accident has occurred). However, the probability of occurrence of such an event is low (estimated to be no more than 10^{-4}/RY). Contamination of groundwater is not likely to occur in the event of a core meltdown unless the basemat is penetrated. Therefore, the deterministic population doses given in Table 5.17 should be multiplied by a factor of about 10^{-4} to obtain the risk (probability estimates times consequences) of annual uninterdicted population doses for an 1150-MW reactor.

The population doses provided by these analyses are also based on the assumption that contaminated surface water and groundwater are not interdicted. Interdiction would lower the population doses significantly and could consist of preventing the contaminants from reaching the surface water, preventing use of the water, or making it difficult to obtain contaminated food. It is assumed, however, that interdicting the source of contamination once it enters the groundwater is not by itself sufficient because it may be impractical to completely isolate a contaminated aquifer from its surroundings. At best, containment measures such as grout curtains slow the groundwater movement but do not prevent it. However, the increased travel time reduces the rate of groundwater discharge to surface water bodies and reduces the concentration of radionuclides through prolonged radioactive decay. In any event, limiting people's contact with contamination through such measures as preventing or confiscating catches of recreational and commercial fish and shellfish, prohibiting water-based recreation, and eliminating surface water as a drinking-water source may have to be employed.

Table 5.30 Sites having uncertain groundwater pathway population doses with respect to the Liquid Pathway Generic Study and other final environmental statement analyses

Category site	Major concern	~Downstream population x 10^3
Small river		
Arkansas Nuclear	Weathered rock	2506
Arnold	Pleistocene-holocene aquifer	5780
Bellefonte	Fractured limestone	3243
Browns Ferry	Limestone	3078
Connecticut Yankee	Uncertain pathway	< 10
Dresden	Pleistocene aquifer	6037
La Salle	Uncertain characteristics of glacial deposits	6012
McGuire	Weathered rock	1683

Monticello	Large nearby population	8690
North Anna	Weathered rock	< 10
Oconee	Fractured rock	752
Peach Bottom	Weathered rock	< 10
Prairie Island	Large nearby population	6302
Robinson	Low stream flow	231
Sequoyah	Weathered limestone	3681
Three Mile Island	Surrounded by Holocene alluvium	20
Vermont Yankee	Uncertain characteristics of glacial deposits	1724
Watts Bar	Limestone	3681
Yankee Row	Uncertain pathway	1724
Large river		
Trojan	Fractured rock	
WNP-2[a,b]	Fractured rock	

[a]WNP-2 = Washington Nuclear Project 2.

[b]This site has an existing severe accident liquid pathway analysis. Analytical results for this site may be non-conservative.

Ocean and estuarine sites would be the hardest in which to effect interdiction because of the food pathway. Not only are the physical transport mechanisms of these systems complex, but many of the important recreational and commercial organisms are highly mobile. Thus, total confinement of the contamination would not be likely and controlling the taking of these organisms by man would need to be relied upon. However, it is reasonable to expect that dose reduction would occur as a result of interdiction of the pathways. It is estimated that the dose could be reduced by an order of magnitude (NUREG-0440, Table 7.3.2).

The risk to the population from releases to groundwater can be estimated by considering the information in Tables 5.17 through 5.29.

- For large river sites, risk to the population can be estimated from the LPGS analyses as approximately 12 person-rem/RY (assuming the annual probability is 1×10^{-4} for a core melt with penetration of the basemat). For the large river site that has a larger population dose estimate than the LPGS (WNP-2) it is estimated that WNP-2 exceeds the LPGS by 50 percent (Table 5.20) for a risk of approximately 18 person-rem/RY. Pathway interdiction can reduce this dose by an order of magnitude; thus, the predicted annual population dose for large river sites is only a small fraction of that from the atmospheric pathway.
- For small river sites, the risk to the population can be estimated from the LPGS analyses as approximately 1000 person-rem/RY with drinking-water risk contributing 890 person-rem/RY, ingestion contributing 70 person-rem/RY, and shoreline exposure contributing 40 person-rem/RY. Table 5.18 shows that the Byron Station FES-predicted population doses are higher than the LPGS small river site and would result in an annual population risk of approximately 3000 person-rem/RY at MYR. However, pathway interdiction could reduce this figure by a factor of 10, thus making the risk from groundwater releases only a small fraction of that from the atmospheric pathway for Byron Station. All other plants listed in Table 5.18 have much lower risk from groundwater releases than Byron Station.
  From Table 5.19, there may be as many as 19 small river sites that could exceed the Byron Station dose estimate. However, conservatively assuming that all of the radionuclides would reach the river and considering the potentially greater population that could be exposed, it is estimated that in several cases the Byron Station population doses could be exceeded by up to a factor of 10; but in most cases the population doses would be similar to or less than those of Byron Station. Accordingly, the risk from groundwater releases at small river sites is, in

most cases, a small fraction of that from atmospheric releases and in several cases may be similar to that from atmospheric releases.

- For Great Lakes sites, the risk to the population can be estimated from the LPGS analyses as approximately 350 person-rem/RY. However, the Fermi-2 FES analyses estimate a risk to the population of approximately 40 percent higher than the LPGS (Table 5.22), or approximately 500 person-rem/RY, uninterdicted. Pathway interdiction could reduce this by a factor of 10, thus making the annual population risk from groundwater releases only a small fraction of that from atmospheric releases. Since Section 5.3.3.4.4 concludes that the Fermi analysis provides the largest estimated groundwater pathway population dose of all Great Lake sites, the risk from groundwater releases at these sites is only a small fraction of that from atmospheric releases.
- For estuarine sites, the LPGS analyses predict a high population risk without interdiction (17,700 person-rem/RY). Pathway interdiction could reduce this by a factor of 10. Section 5.3.3.4.6 indicates that the LPGS analyses provide the largest estimated population risk for all estuarine sites. Therefore, the risk from groundwater releases at estuarine sites is lower than or comparable to that from atmospheric releases.
- For ocean sites, the risk to the population can be estimated from the LPGS analysis as approximately 55 person-rem/RY. From review of the Seabrook FES, it is estimated that the risk to the population may be as much as six times higher for Seabrook (Table 5.24), or approximately 330 person-rem/RY. Since pathway interdiction can reduce this by a factor of 10, it is a small fraction of the predicted risk from atmospheric releases from Seabrook. For other ocean sites, as discussed in Section 5.3.3.4.5, the Seabrook analysis provides a larger groundwater pathway population dose than all but Turkey Point. However, from the data in Table 5.25, assuming all the radionuclides from the reactor reach the groundwater, the population dose from Turkey Point at MYR would not be expected to exceed Seabrook (considering the differences in reactor size and surrounding population). Therefore, it can be concluded that the risk from groundwater releases at ocean sites would be a small fraction of that from atmospheric releases.
- For dry sites, all predicted releases are orders of magnitude lower than the LPGS. From the LPGS (NUREG-0440, Table 6.2.21), the uninterdicted population risk from drinking water could be as high as 10^4 person-rem, which would be one person-rem/RY on an annual risk basis. This is much less than the risk from atmospheric releases.

5.3.3.4.9 Conclusion

Based on the above discussion, it is concluded that groundwater generally contributes only a small fraction of that risk attributable to the atmospheric pathway but in a few cases may contribute a comparable risk.

5.3.3.5 Economic Impacts

The purpose of this section is to determine if the economic costs of the severe accidents that have been estimated in the 27 FESs that contain severe accident analyses can be used to predict the future costs of such accidents at all sites. Similar to Section 5.3.3.2, the EI is used as a predictor of cost because the cost should be dependent upon the economic impact in the same way and for the same reason as population dose estimates are dependent.

CRAC was used to calculate off-site severe accident costs for the area contaminated by the accident. The off-site costs that were considered relate to avoidance of adverse health effects and are categorized as follows:

- evacuation costs,
- value of crops contaminated and condemned,
- value of milk contaminated and condemned,
- costs of decontamination of property where practical, and
- indirect costs resulting from the loss of use of property and incomes derived therefrom (including interdiction to prevent human injury).

The severe accident analysis for the 27 FES plants uses these five cost category models to estimate an average (annual) expected cost due to a severe accident. These costs are a sum of the costs for a range of accidents multiplied by the

probability that each of the accidents will occur. Costs in this section are stated in 1980 dollars to facilitate comparisons among plants. Key cost variables include projected population distributions, habitable land fraction, and statewide land-use statistics that identify land and crop values. The off-site consequence code then computes the off-site mitigation costs described above. For the FES plants that have severe accident analyses, estimated off-site accident costs could reach as high as $6 billion to $8 billion, but the probability of an accident with such high consequences would only be once in one million operating years. Higher costs are estimated for accidents with much lower probabilities. Projected costs of adverse health effects from deaths and illnesses would average about 10-20 percent of off-site mitigation costs. These costs are not considered in the economic cost calculations. One addition to these off-site costs was made in NRC risk analyses beginning in 1984. Recognizing that termination of economic activities in a contaminated area would create adverse economic impacts in wider regional markets and sources of supplies outside the contaminated area, NRC began estimating these additional economic costs in FESs. These costs are calculated only for a 1-year period after an accident and can reach into the billions of dollars.

Because some key variables affecting cost are strongly related to population density, it may be possible to predict mitigation costs for contaminated areas off-site using the EI developed in Section 5.3.3.2.1. To test this possibility, the expected cost of an accident calculated in 27 FESs having severe accident analyses was normalized for a plant size of 1000 MW(t) (Table 5.31) and then regressed against the EI value at 150 miles for that plant (Table 5.4).

Upper bound normalized expected costs of accidents during the MYR period for all plants were then predicted using this regression and the EI for populations for the MYR period. The estimates were then nonnormalized to convert to expected costs (MYR).

MYR 95% projected cost/RY[b] (1994 dollars)

Table 5.31 Average expected costs during the current license period and predicted expected costs during the middle year of license renewal (MYR) resulting from a severe accident

Plant	Average expected cost/RY[a] (dollars)	10-mile MYR population	
Arkansas	--	33,992	477,750
Beaver Valley	29,000	155,141	1,565,550
Bellefonte	--	35,846	2,278,500
Big Rock Point	--	11,037	73,500
Braidwood	14,000	32,652	6,357,750
Browns Ferry	--	36,400	1,984,500
Brunswick	--	15,348	992,250
Byron	8,400	23,900	4,226,250
Callaway	4,300	6,877	1,528,800
Calvert Cliffs	--	24,564	4,336,500
Catawba	7,100	130,735	1,764,000
Clinton	6,700	16,543	3,344,250
Comanche Peak	3,900	19,400	882,000
Cooper	--	6,768	2,116,800
Crystal River	--	20,368	1,249,500
D.C. Cook	--	63,680	2,094,750
Davis-Besse	--	19,714	3,013,500
Diablo Canyon	--	29,591	661,500
Dresden	--	48,248	2,609,250
Duane Arnold	--	94,461	463,050
Farley	--	16,421	624,750

Fermi 2	23,000	93,010	2,138,850
FitzPatrick	--	34,403	1,029,000
Fort Calhoun	--	17,978	220,500
Ginna	--	39,649	404,250
Grand Gulf	3,060	10,943	1,984,500
Haddam Neck	--	91,760	2,249,100
Hatch	--	6,607	1,881,600
Hope Creek	40,000	32,844	4,704,000
Indian Point	--	247,253	8,246,700
Kewanee	--	12,966	551,250
La Salle	--	20,204	3,785,250
Limerick	62,200	178,626	3,505,950
Maine Yankee	--	41,435	771,750
McGuire	--	72,117	1,697,850
Millstone 3	80,000	130,000	3,461,850
Monticello	--	28,091	992,250
Nine Mile Point	8,000	35,208	1,396,500
North Anna	--	11,668	2,352,000
Oconee	--	77,790	1,234,800
Oyster Creek	--	96,364	1,675,800
Palisades	--	39,720	2,572,500
Palo Verde	2,260	1,378	1,176,000
Peach Bottom	--	34,894	3,858,750
Perry	7,300	89,247	2,028,600
Pilgrim	--	45,921	1,176,000
Point Beach	--	26,447	588,000
Prairie Island	--	28,450	441,000
Quad Cities	--	42,521	2,131,500
Rancho Seco	--	12,489	2,646,000
River Bend	50,000	33,120	1,580,250
Robinson	--	37,681	1,543,500
Salem	--	32,868	8,636,250
San Onofre	19,000	91,940	2,734,200
Seabrook	5,800	130,574	882,000
Sequoyah	--	66,110	1,433,250
Shearon Harris	3,770	26,423	1,690,500
Shoreham	--	113,644	2,138,850
South Texas	2,600	4,149	2,998,800
St. Lucie	4,250	166,860	1,058,400
Summer	4,800	14,997	2,205,000
Surry	--	103,830	1,146,600
Susquehanna	9,000	54,887	3,153,150
Three Mile Island	--	170,142	3,748,500
Trojan	--	21,958	3,050,250
Turkey Point	--	11,136	551,250
Vermont Yankee	--	2,354	2,763,600

Vogtle	16,000	2,648	2,763,600
Waterford	4,500	1,930	3,998,400
Watts Bar	--	95,237	573,300
WNP-2[c]	2,600	22,878	918,750
Wolf Creek	3,600	7,239	1,411,200
Yankee Row	--	27,263	1,249,500
Zion	--	293,491	2,138,850

[a]RY = reactor year; estimates presented in the final environmental statements for operation license.
[b]Distribution free values (nonparametric--see Appendix G). Includes MELCOR Accident Consequence Code System-implied correction factors as well as an inflation multiplier derived from the icit Gross Domestic Price Inflator Index = 125.9/85.7 = 1.47 (from 1980 to 2nd quarter 1994).
[c]WNP-2 = Washington Nuclear Project 2.

Note: 10 miles = 16 km.

Economic consequences were also benchmarked to the MACCS computer code to ensure the calculated values were based on the most current models and data. The benchmark computations indicated that the CRAC calculations used to estimate the economic impacts for the FES plants did not have a continuous linear relationship with population. The MACCS code predicted higher costs than did the CRAC code; low population sites were underpredicted by substantial margins. The differences were primarily due to the difference in the handling of decontamination costs in the two codes. Results from Tingle (1993) indicate that in order to be comparable to results calculated from MACCS, the regression values should be adjusted though the use of population-dependent correction factors. Table 5.31 reflects average expected cost values that were derived from the regression and then corrected with the following factors:

- Sites with MYR 10-mile (16-km) populations £ 10,000 multiply cost data by 40.
- Sites with MYR 10-mile populations > 10,000 and £ 50,000 multiply cost data by 25.
- Sites with MYR 10-mile populations > 50,000 multiply cost data by 15.

Also, the FES values were in 1980 dollars. To correct for this the average expected cost values were adjusted to 1994 dollars.

In addition to assessing the economic impact of severe accidents, six of the 27 FESs that analyze severe accidents also assess the amount of off-site land that could be contaminated and subject to long-term interdiction as a result of a severe accident.

These plants and their predicted conditional mean values of land contamination are listed below:

- Hope Creek — 7000 m^2/year (8400 yd^2/year)
- Limerick 1 and 2 — 1500 m^2/year (1800 yd^2/year)
- Millstone 3 — 4000 m^2/year (4800 yd^2/year)
- Nine Mile Point 2 — 20,000 m^2/year (24,000 yd^2/year)
- River Bend — 40,000 m^2/year (48,000 yd^2/year)

- South Texas 1 and 2 600 m^2/year
  (720 yd^2/year)

These predicted values would not be expected to change for the license renewal period since they are not affected by increases in population.

As can be seen by the values listed above, the predicted conditional land contamination is small (10 acres/year at most). This is also consistent with WASH-1400 (NUREG-75/014) and a 1982 study on siting criteria (NUREG/CR-2239) which predicts small conditional land contamination values. The land contamination values for these six plants can be considered representative of all plants since they cover the major vendor and containment types and include sites at the upper end of annual rainfall. However, even considering that land contamination values can vary at other sites, it is not expected that predicted land contamination from plants at other sites would vary more than 1 or 2 orders of magnitude from the values listed above and would, therefore, still be a small impact.

5.3.4 Uncertainties

FESs referred to in this section have been based mostly upon the methodology presented in RSS, which was published in 1975 (NUREG-75/014).

Although substantial improvements have been made in various facets of the RSS methodology since its publication, large uncertainties in the results of these analyses remain, including uncertainties associated with the likelihood of the accident sequences and containment failure modes leading to the release categories, the source terms for the release categories, and the estimates of environmental consequences. A comprehensive discussion of the uncertainties associated with risk assessments is provided in NUREG-1150. The relatively more important contributors to uncertainties in the results presented in this environmental statement are as follows.

5.3.4.1 Probability of Occurrence of Accident

If the probability of a release category were to change by some percentage, the probabilities of various types of consequences from that release category would also change by the same percentage. Thus, an order of magnitude uncertainty in the probability of a release category would result in a corresponding order of magnitude uncertainty in both societal and individual risks stemming from the release category. In RSS, there are substantial uncertainties in the probabilities of the release categories. This uncertainty is due, in part, to difficulties associated with the quantification of human error and to limitations in the database on failure rates of individual plant components and in the database on external events and their effects on plant systems, structures, and components that are used to calculate the probabilities. However, since the publication of RSS, substantial NRC programs to improve nuclear plant safety have been implemented such as resolution of generic safety issues (NUREG-0933), Station Blackout and Anticipated Transient Without Scram Rulemakings, and improvements resulting from reviews of the TMI accident (NUREG-0737). These programs, as well as others, all served to reduce the average risk of the overall nuclear industry such that in this GEIS, the use of RSS risk values and their associated frequencies of an accident (because they are embodied within the risk calculation) are reasonable upper estimates of risk for the industry. This is true for even those plants that have not had the benefit of a PRA analysis.

5.3.4.2 Quantity and Chemical Form of Radioactivity Released

There are also significant uncertainties associated with the timing, quantity, and chemical form of each radionuclide species that would be released from a reactor unit during a particular accident sequence. Radioactive material originates in the fuel and would be released from any damaged fuel during an accident. Some would be attenuated by physical and chemical processes en route to being released to the environment. Depending on the accident sequence, such factors as attenuation in the reactor vessel, the rest of the cooling system, the containment, and adjacent buildings would influence both the magnitude and chemical form of radioactive releases. Additional radionuclide releases may originate from on-site dry cask storage facilities for those sites which develop the capability, although the radionuclide inventory is much less than that in the reactor core. Information available in NUREG-0956, in NUREG-1150, and from the latest research activities sponsored by NRC and the industry indicates that the uncertainty in radionuclide source

terms is large and represents a significant contribution to the uncertainty in the absolute value of risk. In comparison with the RSS source terms (which are used in the FES analyses), source terms in recent studies were in some instances higher and in other instances lower. However, for the early containment failure sequences, which have the greatest impact on risk, the RSS source terms appear to be larger than the mean values estimated from the recent work and are typically at the upper bound of the uncertainty range of estimates for NUREG-1150.

5.3.4.3 Atmospheric Dispersion Modeling for the Radioactive Plume Transport

Uncertainties are involved in modeling the atmospheric transport of radioactivity in gaseous and particulate states and the actual transport, diffusion, and deposition or fallout that would occur during an accident (including the effects of condensation and precipitation). The phenomenon of plume rise from heat associated with the atmospheric release, effects of precipitation on the plume, and fallout of particulate matter from the plume all have considerable impact on the magnitudes of early health consequences along with the distances from the reactors where these consequences would occur. These factors can result in overestimates or underestimates of both early and later effects (health and economic).

Other areas that have effects on uncertainty are as follows:

- **Duration, energy release, and in-plant radionuclide decay time**. These areas relate to the differences between assumed release duration, energy of release, and the in-plant radioactivity decay times compared with those that would actually occur during a real accident.
  For an atmospheric release of relatively long duration (greater than a half-hour), the actual cross-wind spread (i.e., the width) of the radioactive plume would likely be larger than the width calculated by the dispersion model in the staff code (CRAC). However, the effective width of the plume is calculated in the code using a plume expansion factor that is determined by the release duration. For a given quantity of radionuclides in a release, the plume and, therefore, the area that would come under its cover would become wider if the release duration were longer. In effect, this would result in lower air and ground concentrations of radioactivity but a greater area of contamination.
  The thermal energy associated with the release affects the plume rise phenomenon; a plume that rises quickly or to a high altitude (as in the Chernobyl accident) results in relatively lower air and ground concentrations in the closer-in regions and relatively higher concentrations in the farther-out regions (because of fallout) than would be predicted for plumes that do not rise. Therefore, if large thermal energy were associated with a release containing a large fraction of core-inventory radionuclides, it could increase the distance from the reactor over which early health effects may occur. If, on the other hand, the release behavior were dominated by the presence of large amounts of condensing steam, very much the reverse could occur because of close-in deposition of radionuclides induced by the falling water condensed from the steam.
  The time from reactor shutdown until the beginning of the release to the environment (atmosphere), known as the time of release, is used to calculate the depletion of radionuclides by radioactive decay within the plant before release. The depletion factor for each radionuclide (determined by the radioactive decay constant and the time of release) multiplied by the release fraction of the radionuclide and its core inventory determines the actual quantity of the radionuclide released to the environment. Later releases would result in the release of fewer curies to the environment for given values of release fractions.
  These parameters can all have significant impacts on accident consequences, particularly early consequences.

- **Meteorological sampling scheme used**. There is a possibility that the meteorological sequences used with the selected start times (sampling) in CRAC may not adequately represent all meteorological variations during the year, or that the year of meteorological data may not represent all possible conditions. This factor is judged to produce greater uncertainties for early effects and less for latent effects.

- **Emergency response effectiveness and warning time**. This relates to the differences between modeling assumptions regarding the emergency response of the people residing near nuclear facilities compared with what would happen during an actual severe reactor accident. Included in these considerations are such subjects as evacuation effectiveness under different circumstances, possible sheltering and its effectiveness, the effectiveness

of population relocation, and the fraction of people assumed not to relocate. The warning time is the interval between the time the plant operating staff recognize plant conditions which would indicate that protective actions should be taken for the general population and the time of the release of radioactive material from the plant. In calculations with CRAC, it is assumed that the protective action taken would always be evacuation. Therefore, in the calculation, the evacuating public could be caught by a radioactive plume and exposed or could evacuate into a passing plume. In reality, there are other protective actions that might be called for by public officials--for instance, sheltering to avoid such a situation. This can affect the simplified assumptions about protective actions in the calculated results and would most likely be in the direction of larger calculated early effects. Longer warning times are always more favorable in reality because they would allow time for consideration of several protective action options. The uncertainties associated with emergency response effectiveness and warning time could cause large uncertainties in early health consequences. The uncertainties in latent health consequences and costs are considered smaller than those for early health consequences.

- **Dose-conversion factors and dose-response relationships for early health consequences**. There are uncertainties associated with the conversion of contamination levels to doses, relationships of doses to health effects, and considerations of the availability of what was described in RSS as supportive medical treatment (a specialized medical treatment program, of limited availability in the local area but with additional availability outside the area, that would minimize the early health effect consequences of high levels of radiation exposure following a severe reactor accident). Although all health impacts have not been enumerated in this evaluation, the primary ones have been, and references to other documents such as RSS provide additional insights into the subject.

- **Dose-conversion factors and dose-response relationships for latent health consequences**. Estimates of dose and latent (delayed and long-term) health effects on individuals and on their succeeding generations involve uncertainties associated with conversion of contamination levels to doses and of doses to health effects. The staff judges that this category has a large uncertainty. The uncertainty could result in relatively small underestimates of consequences, but also in substantial overestimates of consequences. Previous FES analyses have been based on results that utilized dose-response relationships provided in BEIR-III (or earlier reports). Consequently the results presented in this GEIS have been corrected to account for the more recent dose-response relationships provided in BEIR-V and to reflect models and relationships found in the most current consequence assessment codes.

- **Chronic exposure pathways**. Uncertainty arises from the possibility that different protective action guide levels may be used for interdiction or decontamination of the exposure pathways (both the atmospheric pathway and the groundwater pathway) than those assumed in the staff analysis. Furthermore, uncertainty arises because there is a lack of precise knowledge about the fate of the radionuclides in the environment as influenced by natural processes such as runoff and weathering. The staff's qualitative judgment is that the uncertainty from these considerations is substantial.

- **Economic data and modeling**. This relates to uncertainties in the economic parameters and economic modeling such as costs of evacuation, relocation, medical treatment, and decontamination of properties and other costs of property damage. Uncertainty in this area could be substantial.

NUREG-1150 contains a state-of-the-art quantification of the uncertainties in core-melt frequency, containment behavior, and source term evaluation. Also included are discussions of the major factors affecting the uncertainty. For further detail on the topics discussed in Sections 5.3.4.1 through 5.3.4.3, refer to the appropriate topics in NUREG-1150.

5.3.4.4 Assumption of Normality for Random Error Components

The predictions of risk values (early and latent fatalities and total dose) were developed statistically by regressing consequence values calculated in recent nuclear plant FESs. A "standard" assumption in the calculation of confidence bounds for these predictions is that the regression errors have a normal distribution. However, without specific

evidence of normality, normal-theory confidence bounds for the risk may be too high or low, possibly by a significant margin. Therefore, alternative confidence bounds were considered, which do not rely on the errors having a specified distribution such as the normal, but depend instead on a large-sample approximation. When the normal-theory and alternative bounds differed, the ones leading to higher calculated values were used. (This subject is discussed in Appendix G.)

5.3.4.5 Exposure Index

The concept of using a parameter such as EI to predict future risks is also subject to uncertainty. Such issues are discussed below.

- **Selection of EI parameters**. EI is a calculated parameter based on plant-specific information: population surrounding the plant and wind direction frequency data for the plant. The data on population projections used in the calculation of EI values are based on the 1980 census. EI estimates were made for years 1990, 2000, 2010, 2030, and 2050 and for populations at 10 and 150 miles from the plant. Population estimates for these years were obtained from data provided by the Bureau of Economic Analysis. It is estimated that the uncertainty in these population projections is relatively small, certainly less than a factor of two, and, consequently, would not significantly impact the conclusions of this evaluation.
  The wind data were obtained from plant license documentation such as environmental reports or final safety analysis reports; site-specific data are used in this analysis.
  However, other parameters such as exclusion area distance, rainfall, evacuation speed, and terrain can also affect the consequence calculations. The NUREG-1150 study found that for the five plants studied, the fatality magnitudes (early and latent) were driven primarily by the core-damage frequency, the source term releases, site meteorology, population distribution, and the effectiveness of emergency response measures. All these factors were considered in the CRAC analyses done for the FES plants, using site-specific information for meteorology, population, and emergency response actions. The FES plant analyses enveloped a broad range of such site-specific values. Consequently, it is likely that the use of the UCB limit to estimate future environmental impacts would envelop the effects of these parameters for all plants. The FES analyses were usually performed assuming populations representative of the middle year of the normal 40-year license period. Populations would continue to increase as operation continued into a renewal period. Thus, renewal period risks were predicted using population representative of the middle year of the renewal period. Wind direction frequency is very plant-specific and was not considered to be adequately enveloped for the non-FES plants by the FES plant's wind direction frequencies, especially when these frequencies are weighted by the plant-specific population. However, by selection of population and wind direction frequency for the EI and using UCB values to envelop the effects of other parameters, the uncertainty introduced by the selection of EI parameters should be minimized.

- **Selection of distances**. Although the selection of 10 miles and 150 miles for computing EI values produces rather strong correlations between the EI values and the reported effects in FESs (Appendix G), other distances could exist whose selection would ult in stronger correlations. Indeed, as shown in Table 5.5, the FES plants showed a range of 7 to 50 miles for occurrence of total acute fatalities whereas the GEIS analysis used only one distance, 10 miles. However, the effect of stronger correlations would serve primarily to reduce the uncertainty of the regression, thus resulting in a general reduction in the UCB values. Consequently, because the correlations that are used in the study are relatively strong and GEIS uses the UCB values to estimate risk, the possibility of under prediction should be small.

- **Regressing early fatalities for only large plants**. As described in Section 5.3.3.2.1, the regressions for early fatality estimates were performed using data for FES plants having thermal power levels greater than about 3025 MW(t). Although there is some relationship between plant size and predicted early fatalities (all other factors being held constant), the relationship is not linear because of the threshold effects for early fatalities. Therefore, normalization for plant size for the early fatality regression process was not considered appropriate; rather, early fatalities were predicted based only on the data for large plants. This approach should generally provide overpredictions for plants less than 3025 MW(t) resulting in most of the uncertainty being in the direction of

smaller predicted effects. For plants equal to or greater than 3025 MW(t), small uncertainty in the calculated values may be present. However, the use of UCBs for predicting risk values should minimize the possibility of underprediction.

- **Normalization of plants for latent fatalities, costs, and dose**. As described in Section 5.3.3.2.1, the regression for latent fatality and dose curves were performed using FES data that had been normalized to 1000 MW(t) in order to reduce the influence of plant size on the fitted parameters. Actual plant size was used for making the predictions and, therefore, the final results reflect nonnormalized values. The regression of latent fatalities, dose, and costs using normalized FES values assumes a linear relationship between power level and source term released. The use of UCBs to predict risk values should minimize the possibility of underprediction.

5.3.4.6 Summary

The state of the art for the quantitative evaluation of the uncertainties for PRA analyses is presented in the NUREG-1150 studies. The NUREG-1150 results indicate that reduction of uncertainty considerations or previously unanalyzed phenomena and sequences and consideration of plant changes have resulted in individual risk components that are both higher and lower than originally provided in RSS. However, NUREG-1150 shows that the cumulative effect is a reduction in risk for those plants studied, and it is also likely to be the case for the industry as a whole. The GEIS results, when reviewed against current data and methodology, have large uncertainties associated with them. The bounds on this uncertainty could be between a factor of 10 and 1000 and could result in the values used being higher or lower.

5.4 Severe Accident Mitigation Design Alternatives (SAMDAs)

[**Prev** | **Next** | **Table of Contents**]

In 1980 NRC issued an interim policy statement on the consideration of severe accidents in environmental impact statements (EISs) (45 *FR* 40101) applicable to Construction Permit and Operating License applications submitted on or after July 1, 1980. That policy statement states that it is "the intent of the Commission that the staff take steps to identify additional cases that might warrant early consideration of either additional features or other actions which would prevent or mitigate the consequences of serious accidents." Recently, these features have become commonly referred to as SAMDAs. The policy statement goes on to say, "cases for such consideration are those for which a Final Environmental Statement has already been issued at the Construction Permit stage but for which the Operating License review stage has not yet been reached." This statement was made in recognition of the fact that changes in plant design features may be more easily incorporated in plants when construction has not yet progressed very far.

In August 1985, NRC issued its policy statement on severe reactor accidents. That policy statement presented NRC's conclusion that existing plants pose no undue risk to public health and safety and that there was no present basis for immediate action on generic rulemaking or other regulatory changes for those plants because of severe accident risk. Nevertheless, it called for each licensee to perform an analysis designed to discover instances of particular vulnerability to core melt or unusually poor containment performance given a core-melt accident. NRC believed that this policy statement was a sufficient basis for not requiring a consideration of SAMDAs at the operating license review stage for previously constructed plants. However, a 1989 court decision ruled that such a policy statement was not sufficient to preclude a consideration of SAMDAs and that such a consideration is required for plant operation, *Limerick Ecology Action v. NRC*, 869 F.d 719 (3rd Cir. 1989). In order to assess whether SAMDAs can be adequately addressed generically for all plants in this GEIS, it is necessary to consider the level of experience the commission has regarding SAMDAs and the extent to which this experience can reasonably address the SAMDA issue for all plants.

5.4.1 Commission Experience Regarding Severe Accident Mitigation

NRC has gained considerable experience regarding severe accident mitigation during the past several years through implementation of its severe accident policy statement. Specific major actions that have been initiated and, in some cases, completed are (1) evaluation of containment performance and various alternatives for improvement, (2) initiation

of individual plant examination, and (3) initiation of an accident management program. Additionally, NRC has performed three site-specific evaluations of SAMDAs pursuant to the 1989 court decision. These SAMDA analyses were included in the final environmental impact statements for Limerick 1 and 2 and Comanche Peak 1 and 2 operating license reviews, and the Watts Bar supplemental final environmental statement for operation. These actions are addressed below.

5.4.1.1 Containment Performance

NRC has examined each of five U.S. reactor containment types (BWR Mark I, II and III; PWR Ice Condenser; and PWR Dry) with the purpose of examining the potential failure modes, potential fixes, and the cost benefit of such fixes. This examination has been called the containment performance improvement (CPI) program and has been documented in a series of reports (NUREG/CR-5225; NUREG/CR-5278; NUREG/CR-5528; NUREG/ CR-5529; NUREG/CR-5565; NUREG/CR-5567; NUREG/CR-5575; NUREG/CR-5586; NUREG/CR-5589; NUREG/CR-5602; NUREG/CR-5623; NUREG/ CR-5630). Tables 5.32 through 5.34 summarize the results of this program. As can be seen from these tables, many potential changes were evaluated but only a few containment improvements were identified for site-specific review. The items evaluated in the CPI program were also included in the list of plant-specific SAMDAs examined in the Limerick, Comanche Peak, and Watts Bar FES supplements, discussed later.

5.4.1.2 Individual Plant Examinations

In accordance with NRC's policy statement on severe accidents, each licensee has been requested to perform an individual plant examination (IPE) to look for vulnerabilities to both internal and external initiating events (Generic Letter 88-20, Supplements 1-4). This examination will consider potential improvements on a plant-specific basis. In effect, IPE could be considered equivalent to a monitoring program that looks at the severe accident performance of each licensed plant. Detailed guidance has been issued to each licensee regarding the scope and conduct of IPE and the reporting requirements. NRC staff intends to review each submittal and, if plant modifications not proposed by the licensee appear warranted, to pursue the incorporation of such modifications via NRC's backfit rule (10 CFR Part 50.109). To date, 22 IPEs have been reviewed by NRC. These IPEs have resulted in plant procedural and programmatic improvements (i.e., accident management) and, in only a few cases, minor plant modifications, to further reduce the risk and consequences of severe accidents.

5.4.1.3 Accident Management

Accident management involves the development of procedures that promote the most effective use of available plant equipment and staff in the event of an accident. NRC has indicated its intent (Generic Letter 88-20, Supplement 2) to request that licensees develop an accident management framework that will include implementation of accident management procedures, training, and technical guidance. It is expected that insights gained as a result of IPE will be factored into the accident management program. As discussed earlier, the majority of improvements identified from the completed IPEs to date have been in the area of accident management or other procedural and programmatic improvements.

5.4.1.4 SAMDA Analyses

Table 5.32 Potential boiling-water reactor containment improvements considered in the containment performance improvement program

Number	Potential improvement	Resolution	Comments
1	Enhanced ADS, low pressure water supply, and backup power	Include in IPE	*a*
2	Hardened vent	Implemented for Mark-Is, included in IPE for Mark-II and IIIs	*b*
3	ATWS sized-hardened vent	Drop	*c*

4	External filter	Drop	*c*
5	Dedicated suppression pool cooling	Drop	*c*
6	Alternate decay heat removal	Drop	*c*
7	Core debris control	Drop	*c*
8	Enhanced drywell spray	Drop	*c*
9	Drywell head flood	Drop	*c*
10	Enhanced reactor building DF	Drop	
11	Backup power for hydrogen ignitors (Mark IIIs)	Included in IPE	*d*

Acronyms: ADS = automatic depressurization system, IPE = individual plant examination, ATWS = anticipated transit without scram, DF = decontamination factor.

[a]Analysis showed that potential improvement may be cost beneficial.
[b]Cost beneficial for Mark-Is.
[c]Not cost effective--potential improvement will be too expensive with too little benefit.
[d]May be cost beneficial.

Table 5.33 Potential pressurized-water reactor ice condenser improvements considered in the containment performance improvement program

Potential improvement	Resolution	Comments
Reactor cavity flooding	Drop	Not cost beneficial. Might cause ex-vessel steam explosion.
Backup water to the containment spray system	Drop	Not cost beneficial
Backup power to the air return fan system	Drop	Not cost beneficial. May increase containment pressurization
Reactor depressurization	Include in accident management	Currently being pursued as a viable accident management strategy
Improved hydrogen ignitor system (backup power)	Include in individual plant examination (IPE)	Most cost beneficial of all alternatives considered (although it still does not meet the backfit test). To be looked at within the IPE program
Containment inerting	Drop	Not cost beneficial, may reduce accessibility for maintenance
Filtered vent	Drop	Not cost beneficial
Ex-vessel core debris curb	Drop	Large uncertainty as to effectiveness
Steam generator tube rupture improvements--increased testing	Further research needed	Being examined in separate Nuclear Regulatory Commission program by the Materials Engineering Branch, RES
Containment bypass improvements	Included in generic issues program	Being examined as part of a separate interfacing system loss of coolant accident generic issue (GSI 105)

Table 5.34 Potential pressurized-water reactor (PWR) large, dry containment improvements considered in the containment performance improvement program

Potential improvement	Resolution	Comments
Operator depressurization using power-operated relief valve	Drop	No conclusive findings on its benefit to risk reduction
Addition of a cavity flooding system	Drop	Not cost beneficial. The effect of a flooded cavity on the direct containment heating threats may be beneficial or detrimental, depending on each plant

Addition of hydrogen control system	Assess in individual plant examination (IPE)	Recommend all dry PWR containments assess the likelihood of local hydrogen detonation in the IPE

Site specific SAMDA analyses were performed for Limerick, Comanche Peak, and Watts Bar. A listing of the specific SAMDAs reviewed for applicability to Limerick is provided in Table 5.35. The staff examined each SAMDA (individually and, in some cases, in combination) to determine its individual risk reduction potential. This risk reduction was then compared with the cost of implementing the SAMDA to provide cost-benefit evidence of its value. Considering that the estimates of risk at Limerick used by the staff in these evaluations were considered to be high and that the uncertainties associated with the costs, effectiveness, and/or operational disadvantages of some SAMDAs were large, the staff concluded that there was no clear evidence that modifications to Limerick were justified for the purpose of further mitigating severe accident risks.

The staff made a similar assessment of SAMDAs for the Comanche Peak Steam Electric Station. A list of the SAMDAs reviewed in this evaluation is provided in Table 5.36. As with the Limerick evaluation, the staff had no basis for concluding that modifications to Comanche Peak were justified for the purpose of further mitigating environmental concerns as they relate to severe accidents. Recently, the staff evaluated SAMDAs for the Watts Bar Nuclear Plant. As in the Limerick and Comanche Peak analyses, no plant modifications were justified for the purpose of further mitigating severe accident risk and consequences.

Several important items from these analyses should be noted.

- First, the SAMDAs considered at Limerick, Comanche Peak, and Watts Bar covered a broad range of accident prevention and mitigation features. These features included the items that were evaluated for all containment types as part of the CPI Program.
- Second, the Limerick analyses were for a plant at a high population site. Since risk to the public is generally proportional to the population surrounding the plant, one would generally expect SAMDAs for plants at high population sites to have the most favorable cost-benefit ratio. Since SAMDAs were found not to be justified at Limerick, it is unlikely that they would be justified for plants at other sites.
- Third, plant procedural and programmatic improvements (rather than plant modifications) were the only cost-beneficial improvements identified from these analyses.

Table 5.35 Severe accident mitigation design alternatives (SAMDAs) considered for the Limerick Generating Station

1. Installation of alternative means to maintain suppression pool subcooling to improve plant's capability to remove decay heat and prevent containment overpressure challenge

2. Provision of an alternative means of decay heat removal

3a. Installation of containment vent of sufficient size to prevent containment overpressure due to an anticipated transient without scram event

3b. Installation of containment vent and filter of sufficient size to prevent containment overpressure due to an inability to remove decay heat

3c. Installation of containment vent (no filter) of sufficient size to prevent containment overpressure due to an inability to remove decay heat[a]

4. Installation of core debris control devices to prevent core/concrete interaction and remove decay heat from the core debris

5a. Provide enhanced drywell spray capability to increase the reliability for removal of heat from the drywell atmosphere and the core debris, thereby minimizing the threat of containment failure due to overpressure

5b. Provide modification for flooding of the drywell head to help mitigate accidents that result in leakage through the drywell head seal

6. Provide the capability for diesel-driven, low-pressure makeup to the reactor to help in mitigation of core damage resulting from accident sequences in which the reactor vessel is depressurized and all other means of injecting water to the vessel have been lost

7. Improve the reliability of the automatic depressurization system to reduce the probability of vessel failure at high pressure during a severe accident

8. Establish an improved decontamination factor for secondary containment through enhancement to the fire protection system and/or the standby gas treatment system hardware and procedures to improve fission product removal

[a]This SAMDA has been implemented for plants having Mark I containments.

Table 5.36 Listing of severe accident mitigation design alternatives considered for the Comanche Peak Steam Electric Station

Additional Instrumentation for Bypass Sequences: Install pressure-monitoring or leak-monitoring instruments (permanent pressure sensors) between the first two pressure isolation valves on low-pressure injection lines, residual heat removal (RHR) suction lines, and high-pressure injection lines. The additional instrumentation would improve the ability to detect valve leakage or open valves, and would decrease the frequency of interfacing system loss-of-coolant accidents (LOCAs).

Deliberate Ignition System: Provide a system to promote ignition of combustible gases (hydrogen and carbon monoxide) at low concentrations. The ignition system would prevent large-scale deflagrations or detonations in events involving gradual releases of combustibles (such as from cladding oxidation or core-concrete interactions) but may be ineffective for rapid releases of hydrogen that could occur coincident with reactor vessel failure at high pressure.

Reactor Coolant System Depressurization: Provide a capability to rapidly depressurize the reactor coolant system. Reactor depressurization would allow injection using low-pressure systems and would reduce the threat of direct containment heating and induced failures of steam generator tubes and primary coolant piping in the event low-pressure injection systems are not available. Depressurization could be achieved by a system specially designed to manually depressurize the reactor vessel or by actuation of existing pressurizer power-operated relief valves, reactor vessel heat vent valves, and secondary system valves.

Independent Containment Spray System: Provide an independent containment spray system, using the existing spray headers if appropriate. The spray system would cool the containment and the core debris, thereby reducing the challenge to containment from overtemperature and long-term overpressure by steam. However, unless the sprays terminate core-concrete interactions, the noncondensable gases released from the concrete are expected to cause the containment to eventually fail by overpressure.

Reactor Cavity Flooding System: Provide a capability to flood the reactor cavity before and after reactor vessel breach. Cavity flooding would promote debris coolability, reduce core-concrete interactions and noncondensable gas production, and provide fission product scrubbing.

Filtered Containment Venting: Provide a capability to vent the containment through a vent path routed to an external filter. The filtered vent would mitigate challenges to containment from long-term overpressure and hydrogen burn (by reducing the baseline containment pressure) but may not be effective for mitigating energetic events such as hydrogen burns coincident with reactor vessel failure.

Additional Diesel Generator: Provide an additional diesel generator with cross-ties to both Class 1E buses. This modification would increase the availability of the AC power system and reduce the frequency of station blackout sequences.

Additional DC Battery Capability: Provide additional DC battery capability to ensure eight hours of instrumentation and control power, as opposed to four in the event of a station blackout. This would extend the time available for recovery and reduce the frequency of long-term station blackout sequences.
Alternative Means of Core Injection: Provide a capability for makeup water to the reactor using a low-pressure, diesel-driven pump of sufficient capacity and associated piping hardware and procedures. The diesel-driven pump would serve as a backup to the front-line, low-pressure injection systems and could also be used to maintain core cooling in the event of a LOCA.
Improved Availability of Recirculation Mode: Provide a system to automatically switch the suction of the safety injection and centrifugal charging pumps to the RHR pump discharge when the refueling water storage tank is depleted. Automatic switchover would reduce the potential for operator error and improve the availability of core cooling in the recirculation mode.
Additional Service Water Pump: Add a third 100 percent service water pump to improve the availability of the station service water system. This would reduce the frequency of sequences involving failure of vital plant equipment due to loss of cooling.

5.4.1.5 Conclusion

Although NRC has gained considerable experience regarding severe accident mitigation improvements, the ongoing regulatory programs related to severe accident mitigation (i.e., individual plant examination/individual plant examination of external events and Accident Management) have not been completed for all plants. Since these programs have identified plant programmatic and procedural improvements (and in a few cases, minor plant modification) as cost effective in reducing severe accident consequence and risk, it would be premature to generically conclude that a consideration of severe accident mitigation is not required for license renewal.

However, based on the experiences discussed above, the NRC expects that a site-specific consideration of severe accident mitigation for license renewal will only identify procedural and programmatic improvements (and perhaps minor hardware changes) as being cost-beneficial in reducing severe accident risk or consequence. Therefore, a site-specific consideration of alternatives to mitigate severe accidents shall be performed for license renewal unless such a consideration has already been included in a previous EIS or related supplement. Staff evaluations of alternatives to mitigate severe accidents have already been completed and included in an EIS or supplement for Limerick, Comanche Peak, and Watts Bar; therefore, severe accident mitigation need not be reassessed for these plants for license renewal.

5.5 Summary and Conclusions

[**Prev** | **Next** | **Table of Contents**]

The foregoing discussions have dealt with the environmental impacts of accidents during operation after license renewal. The primary assumption for this evaluation is that the frequency (or likelihood of occurrence) of an accident at a given plant would not increase during the plant lifetime (inclusive of the license renewal period) because regulatory controls ensure the plant's licensing basis is maintained and improved, where warranted. However, it was recognized that the changing environment around the plant is not subject to regulatory controls and introduces the potential for changing risk. Estimation of future severe accident consequences and risk was based upon existing risk and consequence analyses found in FES for recently licensed plants because these include severe accident analyses and constitute a representative set of plants and sites for the United States.

5.5.1 Impacts from Design-Basis Accidents

The environmental impacts of postulated accidents were evaluated for the license renewal period in GEIS Chapter 5. All plants have had a previous evaluation of the environmental impacts of design-basis accidents. In addition, the licensee will be required to maintain acceptable design and performance criteria throughout the renewal period. Therefore, the calculated releases from design-basis accidents would not be expected to change. Since the consequences of these events are evaluated for the hypothetical maximally exposed individual at the time of licensing, changes in the plant environment will not affect these evaluations. Therefore, the staff concludes that the environmental impacts of design-basis accidents are of small significance for all plants. Because the environmental impacts of design

basis accidents are of small significance and because additional measures to reduce such impacts would be costly, the staff concludes that no mitigation measures beyond those implemented during the current term license would be warranted. This is a Category 1 issue.

5.5.2 Impacts from Severe Accidents

5.5.2.1 Atmospheric Releases

The evaluation of health and dose effects caused by atmospheric releases used a prediction process to identify those plant sites that are bounded by existing analyses. Existing analyses represent only a subset of operating plants. A particular portion of this subset, specifically those plants having severe accident analyses in their respective FESs, was used in this evaluation. EI (which is a function of population and wind direction), in conjunction with the FES severe accident analyses, was then used to develop a means to predict consequences for all plants. Average values and 95 percent UCB values were estimated. Table 5.6 provides the results of this prediction process.

Results indicate that the predicted effects of a severe accident during MYR at the 74 sites of nuclear power plants in the United States are not expected to exceed a small fraction of that risk to which the population is already exposed. In addition, the dose to individuals was also predicted. Results indicate that the highest e individual dose would be 3×10^{-4} rem/RY. This dose compares to an average of 3×10^{-1} rem/person/year for all other causes, including radon. Therefore, the probability-weighted consequences from atmospheric releases associated with severe accidents is judged to be of small significance for all plants.

5.5.2.2 Fallout onto Open Bodies of Water

The results of comparative analyses for the drinking-water pathway concluded that Great Lakes sites have the same order-of-magnitude risk that was calculated in the Fermi 2 FES, which is only a small fraction of the risk from atmospheric pathway releases. River sites with potentially greater risk than in the Fermi FES are amenable to interdiction, which can significantly reduce risk. In the case of the aquatic food pathway, interdicted population exposures are less than or essentially the same as atmospheric pathway releases. For both the drinking water and aquatic food pathways, the probability-weighted consequences from fallout due to severe accidents is of small significance.

5.5.2.3 Releases from Groundwater

The comparative analyses for this pathway were done by first segregating all sites into six general categories as called out in the NRC LPGS (NUREG-0440) and then estimating if the risk consequences calculated in existing analyses (including the LPGS) bounds the risks for all other plants within each category.

Of the six categories, three are judged to be bound by existing analyses. These categories are Great Lake sites, estuaries, and dry sites.

For the other categories, estimates were made of the degree to which groundwater releases could exceed existing analyses. For all six categories, the staff concluded that the risk to the population was either a small fraction of that for atmospheric releases or, in a few cases, comparable to that from atmospheric releases. Therefore, the probability-weighted consequences from groundwater releases due to severe accidents is judged to be of small significance for all plants.

5.5.2.4 Societal and Economic Risks

The expected costs resulting from a severe accident at nuclear power plants during their renewal periods have been predicted from evaluations presented in 27 FESs. Estimates of the extent of land contamination have also been presented. In both cases, the conditional impacts are judged to be of small significance for all plants.

5.5.2.5 SAMDAs

The staff concluded that the generic analysis summarized above applies to all plants and that the probability-weighted consequences of atmospheric releases, fallout onto open bodies of water, releases to ground water, and societal and economic impacts of severe accidents are of small significance for all plants. However, not all plants have performed a site-specific analysis of measures that could mitigate severe accidents. Consequently, severe accidents are a Category 2 issue for plants that have not performed a site-specific consideration of severe accident mitigation and submitted that analysis for Commission review.

5.6 Endnotes

[**Prev** | **Next** | **Table of Contents**]

While a dose as low as 10 rem may cause such observable physiological changes as chromosomal aberrations, these changes are not classified as clinical injury.
Also referred to as the Rogovin report.
Grand Gulf, Sequoyah, Surry, Peach Bottom, and Zion.
The FitzPatrick and Nine Mile Point units are located closely enough to assume that they are located on the same site. A similar observation can be made for the Hope Creek and Salem units.
Because the hypothetical sites were to be modeled as either PWRs or BWRs, those using population data of actual PWR sites utilized updated WASH-1400 source terms taken from the Byron FES (NUREG-0848), while those using population data for BWRs utilized updated WASH-1400 source terms taken from the Clinton FES (NUREG-0854).

5.7 REFERENCES

Acharya, S., and R. M. Blond, Transcript of Testimony Before the Atomic Safety and Licensing Board in the Matter of Consolidated Edison of New York (Indian Point, Unit 2) and Power Authority of the State of New York (Indian Point, Unit 3) (Docket Nos. 50-247-SP and 50-286-SP), Sections III.C.A and III.C.B, n.d.

BEIR-I, *The Effects on Populations of Exposure to Low Levels of Ionizing Radiations*, National Research Council, Advisory Committee on the Biological Effects of Ionizing Radiation, National Academy of Sciences, Washington, D.C., 1972.

BEIR-III, *The Effects on Populations of Exposure to Low Levels of Ionizing Radiation: 1980*, National Research Council, Advisory Committee on the Biological Effects of Ionizing Radiation, National Academy of Sciences, Washington, D.C., 1980.

BEIR-V, *Health Effects of Exposure to Low Levels of Ionizing Radiation*, National Research Council, Advisory Committee on the Biological Effects of Ionizing Radiation, National Academy of Sciences, Washington, D.C., 1990.

Bertini, H. W., *Descriptions of Selected Accidents That Have Occurred at Nuclear Reactor Facilities*, ORNL/NSIC-176, Oak Ridge National Laboratory, Oak Ridge, Tennessee, April 1980.

Codell, R. B., "Potential Contamination of Surface Water Supplies by Atmospheric Releases from Nuclear Plants," *Health Physics* **49**(5), 713-30, November 1985.

ConEd (Consolidated Edison Company), *Indian Point Nuclear Power Plant, Unit 2 Final Safety Analysis Report*, June 1982.

Crick, M. J., and G. S. Linsley, *An Assessment of the Radiological Impact of the Windscale Reactor Fire*, National Radiological Protection Board, Chilton, United Kingdom, 1983.

DOE/ER-0332, M. Goldman et al., *Health and Environmental Consequences of the Chernobyl Nuclear Power Accident*, U.S. Department of Energy, Washington, D.C., 1987.

Eisenbud, M., *Environmental Radioactivity from National, Industrial, and Military Sources*, Academic Press, New York, 1987.

Generic Letter 88-20, "Individual Plant Examination for Severe Accident Vulnerabilities," U.S. Nuclear Regulatory Commission, November 23, 1988.

Generic Letter 88-20, Supplement 1, "Initiation of the Individual Plant Examination for Severe Accident Vulnerabilities," U.S. Nuclear Regulatory Commission, August 29, 1989.

Generic Letter 88-20, Supplement 2, "Accident Management Strategies for Consideration in the Individual Plant Examination Process," U.S. Nuclear Regulatory Commission, April 4, 1990.

Generic Letter 88-20, Supplement 3, "Completion of Containment Performance Improvement Program and Forwarding Insights for Use in the Individual Plant Examination for Severe Accident Vulnerabilities," U.S. Nuclear Regulatory Commission, July 6, 1990.

Generic Letter 88-20, Supplement 4, "Individual Plant Examination of External Events (IPEEE) for Severe Accident Vulnerabilities," U.S. Nuclear Regulatory Commission, June 28, 1991.

Goldman, M. "Chernobyl: A Radiological Perspective," *Science*, **238**, 622-23, 1987.

Helton, J. C., et al. "Contamination of Surface-Water Bodies After Reactor Accidents by the Erosion of Atmospherically Deposited Radionuclides," *Health Physics*, **48**(6), 757-71, 1985.

Isherwood, D., *Preliminary Report on Retardation Factors and Radionuclide Migration*, Lawrence Livermore Laboratory, Livermore, California, August 1977.

Lee, Y. T., et al., "A Comparison of Background Seismic Risks and the Incremental Seismic Risk Due to Nuclear Power Plants," *Nuclear Engineering and Design*, **53**, 141-54, 1979.

NAS (National Academy of Sciences), *Estimating Losses from Future Earthquakes--Panel Report*, Panel on Earthquake Loss Estimation Methodology, National Academy Press, 1989.

NRC Regulatory Guide 1.145, *Atmospheric Dispersion Models for Potential Accident Consequence Assessments at Nuclear Power Plants*, U.S. Nuclear Regulatory Commission, Office of Standards Development, November 1982, Reissued 1983.

NUREG-0056, *Final Environmental Statement Related to the Manufacture of Floating Nuclear Power Plants by Offshore Power Systems*, Vol. 1, U.S. Nuclear Regulatory Commission, September 1976.

NUREG-0440, *Liquid Pathway Generic Study: Impacts of Accidental Radioactive Releases to the Hydrosphere from Floating and Land-Based Nuclear Power Plants*, U.S. Nuclear Regulatory Commission, February 1978.

NUREG-0558, *Population Dose and Health Impact of the Accident at the Three Mile Island Nuclear Station*, U.S. Nuclear Regulatory Commission, May 1979.

NUREG-0651, *Evaluation of Steam Generator Tube Rupture Accidents*, U.S. Nuclear Regulatory Commission, March 1980.

NUREG-0713, *Occupational Radiation Exposure at Commercial Nuclear Power Reactors and Other Facilities 1986*, Vol. 8, U.S. Nuclear Regulatory Commission, August 1989.

NUREG-0737, *Clarification of TMI Action Plan Requirements*, U.S. Nuclear Regulatory Commission, November 1980.

NUREG-0769, *Final Environmental Statement Related to the Operation of Fermi, Unit 2*, U.S. Nuclear Regulatory Commission, August 1981.

NUREG-0769, Addendum 1, *Final Environmental Statement Related to the Operation of Enrico Fermi Atomic Power Plant, Addendum No. 1*, U.S. Nuclear Regulatory Commission, August 1982.

NUREG-0773, *The Development of Severe Reactor Accident Source Terms: 1957-1981*, U.S. Nuclear Regulatory Commission, November 1981.

NUREG-0775, Supplement, *Final Environmental Statement Related to the Operation of Comanche Peak Steam Electric Station, Units 1 and 2*, U.S. Nuclear Regulatory Commission, October 1989.

NUREG-0848, *Final Environmental Statement Related to the Operation of Byron Station, Units 1 and 2*, U.S. Nuclear Regulatory Commission, April 1982.

NUREG-0854, *Final Environmental Statement Related to the Operation of Clinton Power Station, Unit 1*, U.S. Nuclear Regulatory Commission, May 1982.

NUREG-0884, *Final Environmental Statement Related to the Operation of Perry, Units 1 and 2*, U.S. Nuclear Regulatory Commission, August 1982.

NUREG-0933, R. Emrst and W. Minners, *Prioritization of Generic Safety Issues*, U.S. Nuclear Regulatory Commission, Washington, D.C., December 1983.

NUREG-0956, *Reassessment of the Technical Bases for Estimating Source Terms: Draft Report for Comment*, U.S. Nuclear Regulatory Commission, July 1985.

NUREG-0974, Supplement 1, *Draft Environmental Statement Related to the Operation of Limerick, Units 1 and 2*, U.S. Nuclear Regulatory Commission, December 1983.

NUREG-0974, Supplement, *Final Environmental Statement Related to the Operation of Limerick Generating Station, Units 1 and 2*, U.S. Nuclear Regulatory Commission, August 1989.

NUREG-1054, R. Codell, *Simplified Analysis for Liquid Pathway Studies*, U.S. Nuclear Regulatory Commission, August 1984.

NUREG-1087, *Final Environmental Statement Related to the Operation of Vogtle Electric Generating Plant, Units 1 and 2*, U.S. Nuclear Regulatory Commission, March 1985.

NUREG-1150, *Severe Accident Risks: An Assessment for Five U.S. Nuclear Power Plants*, U.S. Nuclear Regulatory Commission, May 1989.

NUREG-1272, *Office of Analysis and Evaluation of Operational Data 1989 Annual Report: Power Reactors*, U.S. Nuclear Regulatory Commission, Office of Analysis and Evaluation of Operational Data, Washington, D.C., July 1990.

NUREG-1365, *Revised Severe Accident Research Program Plan FY 1990-1992*, U.S. Nuclear Regulatory Commission, Office of Nuclear Regulatory Research, Division of Systems Research, Washington, D.C., August 1989.

NUREG-75/014, *Reactor Safety Study--An Assessment*, U.S. Nuclear Regulatory Commission, October 1975.

NUREG/CR-1250, *Three Mile Island--A Report to the Commissioners and the Public*, Vol. 1, U.S. Nuclear Regulatory Commission, January 1980.

NUREG/CR-1596, S. J. Niemczyk et al., *The Consequences from Liquid Pathways After a Reactor Meltdown Accident*, Sandia National Laboratories, U.S. Nuclear Regulatory Commission, June 1981.

NUREG/CR-1659, *Reactor Safety Study Methodology Applications Program: Grand Gulf No. 1 BWR Power Plant*, Vol. 4, U.S. Nuclear Regulatory Commission, October 1981.

NUREG/CR-2239, *Technical Guidance for Siting Criteria Development*, U.S. Nuclear Regulatory Commission, December 1982.

NUREG/CR-2300, *PRA Procedures Guide*, U.S. Nuclear Regulatory Commission, January 1983.

NUREG/CR-4674, J. W. Minarick et al., *Precursors to Potential Severe Core Damage Accidents, 1985: A Status Report*, prepared by Oak Ridge National Laboratory, Oak Ridge, Tennessee, for U.S. Nuclear Regulatory Commission, December 1986.

NUREG/CR-5225, Addendum 1, *An Overview of BWR Mark-I Containment Venting Risk Implications*, U.S. Nuclear Regulatory Commission, June 1989.

NUREG/CR-5278, *Cost Analysis for Potential BWR Mark-I Containment Improvements*, U.S. Nuclear Regulatory Commission, January 1989.

NUREG/CR-5528, *An Assessment of BWR Mark-II Containment Challenges, Failure Modes and Potential Improvements in Performance*, U.S. Nuclear Regulatory Commission, July 1990.

NUREG/CR-5529, *An Assessment of BWR Mark-III Containment Challenges, Failure Modes, and Potential Improvements in Performance*, U.S. Nuclear Regulatory Commission, January 1991.

NUREG/CR-5565, S. R. Greene et al., *The Response of BWR Mark-II Containments to Station Blackout Severe Accident Sequences*, prepared by Oak Ridge National Laboratory, Oak Ridge, Tennessee, for U.S. Nuclear Regulatory Commission, May 1991.

NUREG/CR-5567, *PWR Dry Containment Issue Characterization*, U.S. Nuclear Regulatory Commission, August 1990.

NUREG/CR-5575, *Quantitative Analysis of Potential Performance Improvements for the Dry PWR Containment*, U.S. Nuclear Regulatory Commission, August 1990.

NUREG/CR-5586, *Mitigation of Direct Containment Heating and Hydrogen Combustion Events in Ice Condenser Plants*, U.S. Nuclear Regulatory Commission, October 1990.

NUREG/CR-5589, *Assessment of Ice-Condenser Containment Performance Issues*, U.S. Nuclear Regulatory Commission, July 1990.

NUREG/CR-5602, *Simplified Containment Event Tree Analysis for the Sequoyah Ice Condenser Containment*, U.S. Nuclear Regulatory Commission, December 1990.

NUREG/CR-5623, *BWR Mark-II Ex-Vessel Corium Interaction Analyses*, U.S. Nuclear Regulatory Commission, 1991.

NUREG/CR-5630, R. G. Gido et al., *PWR Dry Containment Parametric Studies*, prepared by Sandia National Laboratories, for U.S. Nuclear Regulatory Commission, Office of Research, Division of Safety Issue Resolution, April 1991.

ORNL (Oak Ridge National Laboratory), Nuclear Safety Information Center, *Description of Selected Accidents That Have Occurred at Nuclear Reactor Facilities*, Oak Ridge, Tennessee, April 1980.

Parsons, P., "Underground Movement of Radioactive Wastes at Chalk River," in J. Morgan et al., eds., *Proceedings of 2nd Conference on Groundwater Disposal of Radioactive Wastes*, Chalk River, Canada, U.S. Atomic Energy Commission, TID-7628, 1962.

Report of the President's Commission on the Accident at Three Mile Island, Washington, D.C., October 1979.

Thompson, T. J., and J. G. Beckerley, *The Technology of Nuclear Reactor Safety*, Vol. 1, MIT Press, Cambridge, Massachusetts, 1964.

Tingle, A., *CRAC2S-MACCS Comparison of Exposure Index Calculations*, Brookhaven National Laboratory, Upton, New York, February 1993.

United Kingdom National Radiological Protection Board, *An Assessment of the Radiological Impact of the Windscale Reactor Fire*, October 1957.

U.S. Department of Commerce, *Fishery Statistics of the United States, 1976*, Statistical Digest No. 70, National Oceanic and Atmospheric Administration, 1980.

Yambert, M., and M. Linn, *Assessment of the Exposure Index as a Means of Predicting Potential Consequences Associated with Nuclear Power Plant Accidents*, ORNL/NRC/LTR-92/10/RI, Oak Ridge National Laboratory, Oak Ridge, Tennessee, June, 1992.

Page Last Reviewed/Updated Sunday, March 13, 2011

©2000- 2011 NRC

Generic Environmental Impact Statement for License Renewal of Nuclear Plants (NUREG-1437 Vol. 1)

6. The Uranium Fuel Cycle and Solid Waste Management

[**Prev** | **Next** | **Table of Contents**]

This chapter addresses the environmental impacts associated with the uranium fuel cycle as they apply to license renewal and the environmental impacts specifically associated with the management of radiological and nonradiological wastes resulting from license renewal.

6.1 Introduction

[**Prev** | **Next** | **Table of Contents**]

A generic assessment of the radiological and nonradiological environmental impacts of the uranium fuel cycle and transportation of nuclear fuel and wastes is provided in 10 CFR Part 51, Tables S-3 and S-4, respectively, and reproduced herein. This generic information, with the exception of ^{222}Rn and ^{99}Tc, provides the basis for the environmental information provided by applicants and must be used at individual licensing proceedings for the construction of light-water reactors (LWRs). In this chapter the U.S. Nuclear Regulatory Commission (NRC) supplements the data on environmental impacts of the uranium fuel cycle presented in Table S-3 and of transportation of radioactive wastes presented in Table S-4 to extend the coverage of impacts to ^{222}Rn, ^{99}Tc, higher fuel enrichment, higher fuel burnup, and license renewal of up to 20 additional years of operation. The data in Table S-3 were developed to represent the worst case on bounding estimates of the potential releases from the uranium fuel cycle while still being in compliance with NRC regulatory limits. This chapter provides a review of regulatory requirements of the various stages of the fuel cycle, including detailed discussions of the on-site and off-site requirements. The storage and disposal of spent fuel, reactor low-level waste, and mixed waste storage are also discussed. Both the radiological and nonradiological impacts to the environment are addressed.

In response to comments on the draft generic environmental impact statement (GEIS) and the proposed rule, the standard defining *small radiological impact* has changed from a comparison with background radiation to compliance with the dose and regulatory release limits applicable to the various stations of the fuel cycle. This change is appropriate and strengthens the criterion used to define *small environmental impact* for the reasons that follow: The Atomic Energy Act requires NRC to promulgate, inspect, and enforce standards that provide an adequate level of protection of the public health and safety and the environment. These responsibilities, singly and in the aggregate, provide a margin of safety. A review of the regulatory requirements and the performance of facilities provides the bases to project continuation of performance within regulatory standards. For the purposes of assessing radiological impacts, the Commission has concluded that impacts are of small significance if doses and releases do not exceed permissible levels in the Commission's regulations. Accidental releases or noncompliance with the standards could conceivably result in releases that would cause moderate or large radiological impacts. Such conditions are beyond the scope of regulations controlling normal operations and providing an adequate level of protection.

Given current regulatory activities and past regulatory experience, the Commission has no reason to expect that such noncompliance will occur at any significant frequency. To the contrary, the Commission expects that future radiological impacts from the fuel cycle will represent releases and impacts within applicable regulatory limits. Collective doses and associated health effects are calculated and discussed at various places in this chapter. These estimates are provided for perspective only.

Estimates of the magnitude of the human health risks associated with the expected occupational and public dose levels based on the linear effects model should be evaluated relative to the following positions taken by the International Commission on Radiological Protection (ICRP), the National Academy of Sciences/National Research Council (NAS/NRC), and the United Nations Scientific Committee on the Effects of Atomic Radiation (UNSCEAR): (1) the estimation of health effects at low doses (comparable to external natural background) are based on extrapolation from effects seen at high doses and dose rates, with no threshold (the linear model); however, health effects at these low doses have not been demonstrated by human epidemiological studies; (2) the possibility that there may be no risk from exposures comparable to natural background radiation levels cannot be ruled out by any epidemiological studies; and (3) at low doses and dose rates, it must be acknowledged that the lower limit on the range of uncertainty in the risk estimate extends to zero. Section I.B. of the preamble to final 10 CFR Part 20 (56 FR 23360; May 21, 1991) states: "In the absence of convincing evidence that there is a dose threshold or that low levels of radiation are beneficial, the Commission believes that the assumptions regarding a linear nonthreshold dose-effect model for cancers and genetic effects and the existence of thresholds only for certain nonstochastic effects remain appropriate for formulating radiation protection standards and planning radiation protection programs." Therefore, because the health effects are uncertain at low levels of radiation dose, for regulatory purposes it is prudent to use the linear nonthreshold dose-effect model; accordingly, this model was used to estimate health effects.

Table S-3 states the environmental impacts of the uranium fuel cycle from the mining of uranium ore to the ultimate disposal of spent fuel and other radioactive waste that is generated by the use and management of fuel. Table S-4 states the environmental impacts specific to the transportation of fuel and radioactive waste to and from a reactor.

10 CFR Part 51.51(a) states in part, "Every environmental report prepared for the construction permit stage of a light-water-cooled nuclear power reactor, and submitted on or after September 4, 1979, shall take Table S-3, Table of Uranium Fuel Cycle Environmental Data, as the basis for evaluating the contribution of the environmental effects of uranium mining and milling, the production of uranium hexafluoride, isotopic enrichment, fuel fabrication, reprocessing of irradiated fuel, transportation of radioactive materials and management of low-level wastes and high-level wastes related to uranium fuel-cycle activities to the environmental costs of licensing the nuclear power reactor."

The impacts of the uranium fuel cycle are discussed in Section 6.2. The following sections of the chapter are organized by waste type: low level, mixed, and spent fuel. For each waste type, the issues are divided into "baseline," those that are present with or without license renewal, and "effects of license renewal," those that are attributable solely to waste management activities associated with license renewal. In addition, transportation is addressed in a separate section because it applies to all waste types.

6.2 Impacts of the Uranium Fuel Cycle

[**Prev** | **Next** | **Table of Contents**]

The following discussion of the environmental impacts of the fuel cycle as related to the operation of an individual nuclear power plant during the license renewal period is based on the values given in Table S-3 and the staff's analysis of the radiological impact from radon and technetium releases. For the sake of consistency, the data presented in Table S-3 have been cast in terms of a model 1000-MW(e) LWR operating at an annual capacity factor of 80%.

Specific categories of natural resource use included in Table S-3 relate to land use, water consumption and thermal effluents, radioactive releases, burial of transuranic and high- and low-level wastes, and radiation doses from transportation and occupational exposures. The contributions in the table for reprocessing, waste management, and

transportation of wastes are maximized for either of the two fuel cycles (uranium only and no recycle); that is, the cycle that results in the greater impact is used.

6.2.1 Background of Tables S-3 and S-4

Tables S-3 and S-4 provided a summary of the environmental data, and Table S-4 provided a summary of the environmental impacts related to the LWR fuel-cycle facilities and processing operations. The environmental impact values are expressed in terms normalized to show the potential impacts attributable to processing the fuel required for the operation of a 1000-MW(e) nuclear power plant for one year at an 0 percent availability factor to produce about 800 megawatt-years (0.8 gigawatt-year) of electricity. This is referred to as one reference reactor year (RRY). The RRY fuel replacement requires, as raw material, about 182 metric tons (tonnes) of uranium. Based on U.S. uranium industry averages, which are expected to hold well into the next century, the ore assay is assumed to be 0.1 percent uranium, and the recovery of uranium from the ore to be about 90 percent. Thus the mining of about 202,000 tonnes of ore per RRY would be required. The values in Table S-3 are based on the mining and milling of this quantity of ore and the subsequent processing of related quantities of uranium compounds through all steps of the uranium fuel cycle, including radioactive waste disposal.

6.2.2 Uranium Fuel Cycle Environmental Impact

6.2.2.1 Radioactive Effluents

Radioactive effluents estimated to be released to the environment from reprocessing and waste-management activities and certain other phases of the fuel-cycle process are listed in Table S-3. Using these data, the staff has calculated for 1 year of operation of the model 1000-MW(e) LWR, the 100-year involuntary environmental dose commitment to the U.S. population from the LWR-supporting fuel cycle. The 100-year environmental dose commitment is the integrated population dose for 100 years (i.e., it represents the sum of the annual population doses for a total of 100 years).

It is estimated from these calculations that the overall involuntary total-body gaseous dose commitment to the U.S. population from the fuel cycle (excluding reactor releases and the dose commitment due to ^{222}Rn) would be about 400 man-rem for each year of operation of the model 1000-MW(e) LWR (RRY). Based on Table S-3 values, the additional involuntary total-body dose commitments to the U.S. population from radioactive liquid effluents resulting from all fuel-cycle operations other than reactor operation would be about 200 man-rem per year of operation. Thus, the estimated involuntary 100-year environmental dose commitment to the U.S. population from radioactive gaseous and liquid releases due to these portions of the fuel cycle is about 600 man-rem (whole body) per RRY. Using risk estimators of 500 cancer deaths per million man-rem for total-body (NUREG/CR-4214, Rev. 1, Part II, Addendum 1, p. 54), the estimated cancer risk would be 0.3 per RRY ($600 \times 500 \times 10^{-6}$).

Currently, the radiological impacts associated with ^{222}Rn and ^{99}Tc releases are not addressed in Table S-3. Principal radon releases occur during mining and milling operations and as emissions from mill tailings, whereas principal ^{99}Tc releases occur from gaseous diffusion enrichment facilities. Estimates of ^{222}Rn release per RRY from these operations are given in Table 6.1. The underlying assumptions are given later. The staff has calculated population-dose commitments for these sources of ^{222}Rn using the RABGAD computer code described in Volume 3 of NUREG-0002, Appendix A, Chapter IV, Section J. The results of these calculations for mining and milling activities prior to tailings stabilization are given in Table 6.2.

For radon releases from stabilized tailings piles, the staff has assumed that the tailings would emit 1 Ci per RRY, with covering fully intact. Based on this radon release rate, the 100-year dose commitments from stabilized tailing piles are estimated to be 2.6 man-rem for total-body, 68 man-rem for bone, and 56 man-rem for lung (bronchial-epithelium). These dose commitments will continue for many years because ^{222}Rn emission source strength will be constant for about 10,000 years and ultimately decline by a factor of 2 every 80,000 years.

The long-term integrity of the coverings must be maintained because the standards in 40 CFR 192 and 10 CFR 40, Appendix A, require certification of stability and the control of average radon flux levels to 20 pCi/m^2/s. Under

Section 83 of the Atomic Energy Act, a government agency will maintain licensed custody and provide for long-term care of mill tailings sites after closure. Actions the government agency is authorized to conduct include monitoring, maintenance, and emergency measures necessary to protect the public health and safety and other measures necessary to ensure compliance with the standards in 10 Part 40. The NRC has adopted general licenses (10 CFR 40.27 and 40.28) to implement this provision for inactive and active sites, respectively. The general licensee will be the Department of Energy or successor agency, another agency designated by the President, or a state where the disposal site is located. The design and implementation of the radon cover and erosion protection features are the primary reliance for maintaining radon emissions within the Part 40 limits; significant failure of the covers is considered highly unlikely. However, the indefinite licensed long-term custody and care provide additional assurances. Thus, the NRC staff concludes that any needed repairs will be done and that the most likely future for the closed stabilized tailings piles is conformance with the emission standards in 10 CFR 40. On the other hand, there are inherent uncertainties associated with any reliance on institutional controls. In its recent report (NAS 1995), NAS concluded that there is no technical basis for relying on institutional controls for high-level waste facilities. From a policy/resource perspective, future generations may choose not to fulfill the obligations now specified in law for mill tailings. If such a decision is made, the radon emissions might increase by a factor of two orders of magnitude as centuries. Such a policy decision is not irrevocable and may be reversed so that the covers could be repaired at a later date. In spite of these uncertainties, staff believes that the combination of engineering and institutional controls will most likely result in compliance with the flux emission standards now in place for the foreseeable future.

Table 6.1 Radon releases from mining and milling operations and mill tailings for each year of operation of the model 1000-MW(e) light-water reactor

Radon source	Quantity released
Mining, Ci	4060
Milling and tailings (during active milling), Ci	780
Inactive tailings (prior to stabilization), Ci	350
Stabilized tailings, Ci/year	1

Table 6.2 Estimated 100-year environmental dose commitment from mining and milling for each year of operation of the model 1000-MW(e) light-water reactor

		Dosage (man-rem)		
Radon source	**^{222}Rn release (Ci)**	**Total body**	**Bone**	**Lung (bronchial epithelium)**
Mining	4100	110	2800	2300
Milling and tailings (other than stabilized)	1100	29	750	620
Total		140	3600	2900

These doses and predicted health effects have been compared with those that can be expected from natural emissions of ^{222}Rn. Using data from the National Council on Radiation Protection and Measurements (NCRP 1987), the average indoor ^{222}Rn air concentration in air in the contiguous United States is about 1 pCi/L, and the short-half-lived daughter concentration is 0.004 WL (working level). The NCRP estimates that an annual lung dose from radon of 20 mrem will result in an annual dose to the bronchial epithelium of 2400 mrem as a result of the daughter products. For a stabilized future U.S. population of 300 million, this represents a total lung-dose commitment of 720 million man-rem per year. Using the same risk estimator of 78 lung-cancer fatalities per million lung man-rems used to predict cancer fatalities for the model 1000-MW(e) LWR, estimated lung-cancer fatalities alone from natural ^{222}Rn in the indoor air can be calculated to be up to 56,000 per year.

The staff has assumed that after completion of active mining, underground mines will be sealed, returning releases of ^{222}Rn to background levels. For purposes of providing an upper-bound impact assessment, the staff has assumed that open-pit mines will be unreclaimed and has calculated that if all ore were produced from open-pit mines, releases from them would be 110 Ci per RRY. However, because the distribution of uranium ore reserves available by conventional mining methods is 66 percent underground and 34 percent open-pit [GJO-100(78)], the staff has further assumed that

uranium to fuel LWRs will be produced by conventional mining methods in these proportions. This means that long-term releases from unreclaimed open-pit mines will be 37 Ci/year (0.34 x 110) per RRY. In 1994, 100 percent of the domestic uranium came from in situ mining and other sources. None came from underground or open pit (conventional) mining (DOE/EIA-0478, 1995).

Based on these assumptions, the radon released from unreclaimed open-pit mines over 100- and 1000-year periods would be about 3,700 and 37,000 Ci per RRY, respectively. The total dose commitments for a 100- to 1,000-year period would be as shown in Table 6.3. These commitments represent a worst-case situation in that no mitigating circumstances are assumed. However, state and federal laws currently require reclamation of strip and open-pit coal mines, and it is very probable that similar reclamation will be required for open-pit uranium mines. If so, long-term releases from such mines should approach background levels.

For long-term radon releases from stabilized tailings piles, the staff has assumed that the tailings would emit, per RRY, 1 Ci/year for 100 years (covering fully intact), 10 Ci/year for the next 400 years (covering partially failed), and 100 Ci/year for periods beyond 500 years (covering failed). With these assumptions, the cumulative radon-222 release from stabilized tailings piles per RRY would be 100 Ci in 100 years, 4090 Ci in 500 years, and 53,800 Ci in 1000 years (NRC Docket No. 50-488). The total-body, bone, and bronchial-epithelium dose commitments for these periods are as shown in Table 6.4.

It should be noted that there would be global radiological impacts from ^{222}Rn. The number of potential health effects within the U.S. is estimated to be about 90 percent of the total continental health effects. Mexico and Canada would account for the remaining 10 percent of the continental health effects. Exposure in Europe and Asia would add about 25 percent more potential health effects to the number of effects predicted for North America (NUREG-0706, p. 6-68).

Table 6.3 Population-dose commitments from unreclaimed open-pit mines for each year of operation of the model 1000-MW(e) light-water reactor

		Population-dose commitments (man-rem)		
Time period (years)	**^{222}Rn release (Ci)**	**Total body**	**Bone**	**Lung (bronchial epithelium)**
100	3,700	96	2,500	2,000
500	19,000	480	13,000	11,000
1,000	37,000	960	25,000	20,000

Table 6.4 Population-dose commitments from stabilized tailings piles for each year of operation of the model 1000-MW(e) light-water reactor

		Population-dose commitments (man-rem)		
Time period (years)	**^{222}Rn release (Ci)**	**Total body**	**Bone**	**Lung (bronchial epithelium)**
100	100	2.6	68	56
500	4,090	110	2,800	2,300
1,000	53,800	1,400	37,000	30,000

The staff also considered the potential health effects associated with the release of ^{99}Tc. The release per RRY of ^{99}Tc is 0.007 Ci from chemical reprocessing of recycled UF_6 before it enters the isotope enrichment cascade and 0.005 Ci into the groundwater from a federal repository. The major risks from ^{99}Tc are from exposure of the gastrointestinal tract and kidney, although there is a small risk from total-body exposure. Using organ-specific risk estimators, these individual organ risks can be converted to a total-body 100-year dose commitment of 100 man-rem per RRY. These calculations are based on the gaseous and the hydrological pathway model systems described in Volume 3 of NUREG-0002, *Final*

Generic Environmental Statement on the Use of Mixed Oxide Fuel in Light Water Cooled Reactors-Health, Safety, and Environment, Chapter IV, Section J, Appendix A.

The consideration of risks to large populations over long periods of time from exposures to very low concentrations of radionuclides involves many uncertainties. The issue of estimating risks from radon and daughters at very low levels continues to be studied. For example, in a June 7, 1995, article in the Journal of the National Cancer Institute (Lubin et al. 1995), the authors reexamined data on miner exposures and described the uncertainties in projecting risks to indoor radon levels. The indoor concentrations are generally about an order of magnitude lower than the miner exposures, but there is some overlap when comparing lifetime exposures to the exposures of the worker cohorts. The authors concluded that much uncertainty still exists in projecting risks at indoor levels from miner data, including the exposures of miners to agents such as arsenic and diesel exhaust, but that reduction of radon levels in homes above the U.S. Environmental Protection Agency's (EPA's) recommended action level of 4 pCi/L "*may* [emphasis added] reduce lung cancer deaths about 2%-4%." Average U.S. indoor levels are about an order of magnitude higher than ambient outdoor levels. Radon releases from tailings for hundreds and thousands of years are undetectable from background levels at a few km, or less than one km in some cases (NRC Docket 50-488 1986). Thus, in the staff's view, projecting risks from levels another order of magnitude or more lower involves even greater uncertainties. However, the linear nonthreshold assumption continues to be used to calculate potential health effects in documents such as this GEIS where the agency is airing the impacts and potential impacts of activities under consideration.

When added to the 500 man-rem total-body dose commitment for the balance of the fuel cycle, the overall estimated total-body involuntary 100-year environmental dose commitment to the U.S. population from the fuel cycle for the model 1000-MW(e) LWR is about 740 man-rem (500 + 140 + 2.6 + 100). Over this period, this dose is equivalent to 0.0008 percent of the natural total-body dose of about 90 million man-rem to the U.S. population. This estimate is based on an annual average natural individual dose commitment of 300 mrem (includes radon) and a stabilized (assumed constant) U.S. population of 300 million.

Using risk estimators of 500, 0.6, and 78 (NUREG/CR-4214, Rev. 1, Part II, Addendum 1, p. 54; Addendum 2, pp. 38 and 49) cancer deaths per million man-rem for total-body, bone, and lung exposures, respectively, the estimated risk of cancer mortality resulting from fuel cycle from emissions of radioactive material is about 0.6 cancer fatality per RRY [$(740 \times 500 + 3668 \times 0.6 + 2956 \times 78) \times 10^{-6}$].

Using the estimates above, the 100-year environmental dose commitment to the U.S. population from the fuel cycle, high-level-waste and spent-fuel disposal excepted, is calculated to be about 14,800 man-rem, or 12 cancer fatalities, for each additional 20-year power reactor operating term. Much of this, especially the contribution of radon releases from mines and tailing piles, consists of tiny doses summed over large populations. This same dose calculation can theoretically be extended to include many tiny doses over additional thousands of years as well as doses outside the United States. The result of such a calculation would be thousands of cancer fatalities from the fuel cycle, but this result assumes that even tiny doses have some statistical adverse health effects that will not ever be mitigated (for example, no cancer cure in the next thousand years), and that these dose projections over thousands of years are meaningful. However, these assumptions are questionable. In particular, science cannot rule out the possibility that there will be no cancer fatalities from these tiny doses. For perspective, the doses are very small fractions of regulatory limits, and even smaller fractions of natural background exposure to the same population.

Although collective doses and associated potential health effects are calculated and discussed at various places in this chapter, no conclusion is drawn as to the significance of the collective doses or potential health effects. These collective doses are provided for information purposes.

Uranium fuel cycle facilities must comply with NRC, EPA, other federal and state regulations regarding, among other things, the dose limits to the members of the public. Table 6.5 lists types of facilities, the governing regulatory requirements, and the applicable dose limits for individual members of the public. All licensees must provide reasonable assurance that these dose limits are being met for all unrestricted areas. Since each licensee must ensure that the dose is within the limit and be as low as reasonably achievable (ALARA), the dose to individual members of the

public is considered by the staff to be small. More detailed discussions on regulatory limits and compliance are presented below.

In the 1989 National Emission Standards for Hazardous Air Pollutants (NESHAP) rulemaking for radionuclides, discussed elsewhere, EPA examined the uranium fuel-cycle (UFC) licensees (see 54 FR 51668; December 15, 1989) as a separate category. Nonradon emissions from uranium mill tailings, uranium hexafluoride conversion plants, fuel fabrication plants, and power plants (all types of facilities in operation subject to 40 CFR 190 and licensed by NRC at the time) were evaluated and combined. The results of EPA's risk assessment was that:

the most exposed individual receives a dose associated with an increased risk of fatal cancer of 1.5×10^{-4}. There is a predicted incidence of 0.1 fatal cancer per year in the population, with almost all the population risk received by people with a lifetime risk of less than 1×10^{-6}. Virtually the entire U.S. population lives within 80 km of at least one UFC facility.
EPA found that current emissions were at levels that provided an ample margin of safety but decided to regulate this category to ensure that "the current levels of emissions are not increased." The UFC licensees were included in the licensees subject to Subpart I of 40 CFR 61 and its 10 mrem/year annual dose standard. The UFC licensees other than power reactors have been required to comply with Subpart I since November 1992. Reports to EPA are required if emissions exceed 10% or more of the standard. Based on discussions with EPA staff, NRC understands that no fuel cycle licensees exceeded the standard in 1993 and that the same result is likely for 1994. Note that EPA rescind Subpart I for power reactors on September 5, 1995 (60 FR 46206). EPA evaluated enrichment facilities as part of the Department of Energy category and made similar findings and made them subject to the same 10 mrem/year limit.

The NRC dose limits for individual members of the public are found in 10 CFR 20.1301. The general limit is 100 mrem/year [20.1301(a)(1)]. The risk of fatal cancer to an individual receiving this limit is 5×10^{-5} per year of exposure.

Table 6.5 Dose limits for most exposed members of the public from uranium fuel cycle facilities

Facility	**NRC 10 CFR 20 100 mrem/year and ALARA**	**EPA (UFC) 40 CFR 190 25/75/25 mrem/year[a]**	**EPA (CAA) 40 CFR 61 10 mrem/year[a]**	**Other selected standards**
Mines				States, other federal agencies
Surface	No	No	No	
Underground	No	No	Yes	
Milling	Yes	Yes	Yes	10 CFR 40[b]
Mill tailings	Yes[c]	Yes[c]	Yes[c]	10 CFR 40 40 CFR 61, Subpart W[b] 40 CFR 192[b]
UF_6 production	Yes	Yes	Yes	10 CFR 40
Enrichment	Yes	Yes	Yes	10 CFR 76
Fuel fabrication	Yes	Yes	Yes	10 CFR 70
Reactor	Yes	Yes	No	10 CFR 50, Appendix I
Spent-fuel storage	Yes	Yes	Yes	10 CFR 72
Reprocessing	Yes	Yes	Yes	10 CFR 50
High-level waste and spent-fuel disposal	Yes[d]	No	No	10 CFR 60 40 CFR 191
Low-level waste disposal	Yes[d]	No	Yes	10 CFR 61

Transportation	No	No	No	10 CFR 71 DOT-49 CFR

[a]Does not include radon and decay products.
[b]Limiting radon flux to <20 pCi × m^{-2} × s^{-1}, no limit on dose.
[c]Until under general license or closed.
[d]Until closure.

Other limits are 2 mrem/hour in unrestricted areas [20.1301(a)(2)], case-by-case approvals of up to 500 mrem/year [20.1301(c)], and compliance with EPA's 40 CFR 190, if applicable [20.1301(d)]. Licensees are also required to maintain doses to members of the public ALARA by 10 CFR 20.1101(b). The NRC limits apply to all sources under the control of the licensee and to all pathways combined. The individual dose standards in 40 CFR 190 (25 mrem whole body, 75 mrem thyroid, and 25 mrem to other organs) apply to all pathways of exposure from most fuel-cycle facilities, although doses from radon are excluded. NRC generally implements 40 CFR 190 by means of license conditions and has incorporated it by reference in 10 CFR Part 20. Licensees are required to submit reports every six months on radionuclide emissions under 10 CFR 40.65, 70.59, and 76.35 and explicitly required to report exceeding 40 CFR 190 or violations of implementing license conditions by 10 CFR 20.2203(a)(4).

Procedures are in place for inspecting and ensuring licensee compliance with the regulations and license conditions related to public exposures and environmental protection. For example, Inspection Procedures 83822 ("Radiation Protection"), 88035 ("Radioactive Waste Management"), and 88045 ("Environmental Protection") address inspection and verification of matters such as ALARA for emissions, compliance with procedures and limits in license conditions related to releases and public doses, review of environmental monitoring data, and reporting incidents as required by 10 CFR 20.2203. Fuel cycle facilities are inspected at 6- to 12-month intervals, and compliance with public dose limits and license conditions are normally included in the scope of review. (Note that NRC is still in an observation mode only at the enrichment facilities. NRC certification of compliance with standards is still in process as of September 15, 1995.) NRC inspects uranium recovery facilities, including both mills and in situ operations, annually, and all were inspected in 1995. Inspections include review of effluent and environmental monitoring data and compliance with Part 20 and 40 CFR 190. Inspections have found no evidence that limits are being exceeded. The agreement states of Colorado, Texas, and Washington also license and inspect uranium recovery facilities. They have historically inspected for compliance with 40 CFR 190, and no significant problems have been identified. Most mill tailings are in reclamation. Fuel-cycle licensees are generally found to be in compliance, and many of the fuel-fabrication facilities are operating at small fractions of the limits. Violations found and reported involving the exceeding of public dose limits are serious matters. As a matter of policy, exceeding the public dose limits or license conditions related to the limits is at least a severity level III violation and is subject to escalated enforcement actions. The absence of major enforcement actions related to exceeding public dose limits by fuel-cycle facilities readily discernable from the enforcement data base since 1985 suggests that these facilities are operating within the limits. One mill licensee case involved exceeding 10 CFR 20.106 unrestricted area concentration limits for radon, but no actual overexposure of members of the public occurred. There were no other cases for mill licensees since 1985 readily discernable from the data base that might gave involved overexposure of members of the public.

As noted in the preamble to the final rule revising 10 CFR Part 20 in its entirety (56 FR 23374; May 21, 1991), 40 CFR 190 limits "apply to the total dose from all sources within the uranium fuel cycle. However, in its practical implementation, the sources would have to be located within a few miles of each other for the combined dose contributions to be significantly different from the dose from either facility alone." Thus, in the unlikely event that facilities should be near each other, each licensee would have to determine that the combined doses do not exceed the limits.

NRC regulatory authority does not include underground or surface/open pit mining. The states and other federal agencies regulate these activities. They are not subject to 40 CFR 190. EPA considered radon emissions from both types of uranium mining in the 1989 Clean Air Act rulemaking. For surface uranium mines, EPA found that the current situation protected the public with an ample margin of safety. Further, EPA noted that

In addition, this source category is already regulated by a host of state and federal mine reclamation laws. Due to the depressed state of the uranium mining industry, there is no reason to believe that new surface mines will be constructed. The presence of these laws, the very low maximum individual risk and incidence level associated with this category, and the depressed nature of the industry lead EPA to the decision that it is unnecessary for EPA to set a NESHAP for this source category.

For underground mines, EPA found that a NESHAP of 10 mrem/year was necessary and provided an ample margin of safety. As noted elsewhere, no production from either type of uranium mining occurred in 1993 and 1994.

Consideration of EPA's target risk goal for regulatory actions provides perspective and further illuminates the significance of the public doses being estimated and received. The EPA target risk goal is 10^{-4} to 10^{-6} individual lifetime risk. This policy developed over a number of years and is used in many EPA programs, including corrective actions for hazardous waste sites, site cleanups under Superfund, drinking water maximum concentration limits (MCLs) for tap water, and for air emissions under the Clean Air Act. For example, in a 1991 proposed rule to modify the radionuclide MCLs (56 FR 33058; July 18, 1991), EPA stated that "Longstanding and carefully considered EPA policy for regulating carcinogens in drinking water is that the lifetime individual risk target is one in 10,000 (10^{-4}) to one in 1,000,000 (10^{-6}) risk."

The 1989 Clean Air Act (CAA) regulations establishing NESHAPs for radionuclides are based on the target risks. NESHAPs were established for NRC licensees (40 CFR 61, Subpart I) and for radon emissions from operating tailings piles (40 CFR 61, Subpart W) and the disposal of tailings (40 CFR 61, Subpart T). Risks to individuals from high-level waste repository emissions were found to be sufficiently low (less than 1 in 1 million) that no NESHAP was needed. In the final rule (54 FR 51654; December 15; 1989), EPA stated the EPA NESHAPs Policy concerning the risk goals as follows:

This section provides a description of the EPA's approach for the protection of public health under section 112. In protecting public health with an ample margin of safety under section 112, EPA strives to provide maximum feasible protection against risks to health from hazardous air pollutants by (1) protecting the greatest number of persons possible to an individual lifetime risk level no higher than approximately 1 in 1 million and (2) limiting to no higher than approximately 1 in 10 thousand the maximum estimated risk that a person living near a plant would have if he or she were exposed to the emitted pollutant for 70 years. Implementation of these goals is by means of a two-step standard-setting approach, with an analytical first step to determine an "acceptable risk" that considers all health information, including risk estimation uncertainty, and includes a presumptive limit on maximum individual lifetime risk (MIR) of approximately 1 in 10 thousand. A second step follows in which the actual standard is set at a level that provides "an ample margin of safety" in consideration of all health information, including the number of persons at risk levels higher than approximately 1 in 1 million as well as other relevant factors including costs and economic impacts, technological feasibility, and other factors relevant to each particular decision. Applying this approach to the radionuclide source categories in today's notice results in controls that protect over 90 percent of the persons within 80 kilometers (km) of these sources at risk levels no higher than approximately 1 in 1 million.

The 1990 CAA amendments preserved these radionuclide NESHAPS and included a general 10^{-6} lifetime risk threshold for when EPA should consider developing standards or additional requirements on air emissions from sources or removing sources from the list [sections 112(f) and (c)(9), respectively]. The legislative history for the 1990 amendments also included the risk approach as expressed by the quote above as the acceptable basis for EPA not to regulate NRC licensees.

The limits in 40 CFR 190 equate to a maximum individual risk of about 5×10^{-4} per EPA's 1993 rulemaking related to 40 CFR 191 [derived from a lifetime (70-year) individual dose of 15 mrem/year and using risk factor of 500×10^{-6} per rem]. Because ALARA must be applied by licensees, few, if any, individuals would be exposed at this limit. Thus, individual doses expected should fall within EPA's target risk range.

6.2.2.2 Radioactive Wastes

The quantities of buried radioactive waste material (low-level, high-level, and transuranic wastes) associated with the uranium fuel cycle are specified in Table S-3. For low-level waste disposal at land-burial facilities, the Commission notes in Table S-3 that there will be no significant radioactive releases to the environment. The Commission notes that high-level and transuranic wastes are to be buried at a federal repository and that no release to the environment is associated with such disposal, although it has been assumed that all of the gaseous and volatile radionuclides contained in the spent fuel are released to the atmosphere prior to the disposal of the waste. NUREG-0116, which provides background and context for the high-level and transuranic Table S-3 values established by the Commission, indicates that these high-level and transuranic wastes will be buried and will not be released to the biosphere. The generation, storage, and ultimate disposal of low-level waste, mixed waste, and spent fuel from power reactors is addressed in greater detail later in this chapter.

Waste disposal facilities are not covered by 40 CFR 190, but 10 CFR 60 applies to disposal of high-level waste, and 10 CFR 61 applies or is applied to low-level-waste disposal facilities. The NRC regulations for geologic disposal of high-level radioactive waste in 10 CFR 60 limits the releases of radioactive material to the accessible environment. In addition to satisfying an overall performance objective to be established by EPA, the basic requirements are that containment of high-level waste within the waste packages will be substantially complete for a period between 300 and 1,000 years (to be determined by the Commission) and that the annual releases from the engineered barrier system thereafter should not exceed one part in 100,000 of the total inventory of each radionuclide calculated to be present 1,000 years following permanent osure of the repository. For high-level waste, 10 CFR 60.111 requires compliance with 10 CFR 20 and with EPA general environmental standards in 40 CFR 191.

For the high-level-waste and spent-fuel disposal component of the fuel cycle, there are no current regulatory limits for off-site releases of radionuclides for the candidate repository at Yucca Mountain. If we assume that limits are developed along the lines of the 1995 National Academy of Sciences (NAS) report, *Technical Bases for Yucca Mountain Standards*, and that in accordance with the Commission's Waste Confidence Decision, 10 CFR 51.23, a repository can and likely will be developed at some site that will comply with such limits, peak doses to virtually all individuals will be 100 mrem/year or less. While the NRC has reasonable confidence that these assumptions will prove correct, there is considerable uncertainty because the limits are yet to be developed, no repository application has been completed or reviewed, and uncertainty is inherent in the models used to evaluate possible pathways to the human environment. The National Academy report indicated that 100 mrem/year should be considered as a starting point for limits for individual doses, but notes that some measure of consensus exists among national and international bodies that the limits should be a fraction of the 100 mrem/year. The lifetime individual risk from 100 mrem/year dose limit is about 3×10^{-3}.

Estimating cumulative doses to populations over thousands of years is more problematic. The likelihood and consequences of events that could seriously compromise the integrity of a deep geologic repository were evaluated by the Department of Energy in the *Final Environmental Impact Statement: Management of Commercially Generated Radioactive Waste*, October 1980. The evaluation estimated the 70-year whole-body dose commitment to the maximum individual and to the regional population resulting from several modes of breaching a reference repository in the year of closure, after 1,000 years, after 100,000 years, and after 100,000,000 years. The release scenarios covered a wide range of consequences from the limited consequences of humans accidentally drilling into a waste package in the repository to the catastrophic release of the repository inventory by a direct meteor strike. Subsequently, the NRC and other federal agencies have expended considerable effort to develop models for the design and for the licensing of a high-level-waste repository, especially for the candidate repository at Yucca Mountain. More meaningful estimates of doses to population may be possible in the future as more is understood about the performance of the proposed Yucca Mountain repository. Such estimates would involve very great uncertainty, especially with respect to cumulative population doses over thousands of years. The standard proposed by the NAS is a limit on maximum individual dose. The relationship of potential new regulatory requirements, based on the NAS report, and cumulative population impacts has not been determined, although the report articulates the view that protection of individuals will adequately

protect the population for a repository at Yucca Mountain. However, EPA's generic repository standards in 40 CFR 191 generally provide an indication of the order of magnitude of cumulative risk to population that could result from the licensing of a Yucca Mountain repository, assuming the ultimate standards will be within the range of standards now under consideration. The standards in 40 CFR 191 protect the population by imposing "containment requirements" that limit the cumulative amount of radioactive material released over 10,000 years. The cumulative release limits are based on EPA's population impact goal of 1,000 premature cancer deaths worldwide for a 100,000-metric tonne (MTHM) repository.

6.2.2.3 Occupational Dose

The annual occupational dose attributable to all phases of the fuel cycle for the model 1000-MW(e) LWR is about 600 man-rem.

6.2.2.4 Transportation

The transportation dose to workers and the public totals about 25 man-rem/RRY.

6.2.2.5 Fuel Cycle

The NRC staff analysis of the uranium fuel cycle did not depend on the selected fuel cycle (no recycle or uranium-only recycle) because the data provided in Table S-3 include maximum recycle-option impact for each element of the fuel cycle, and therefore the environmental impacts of the fuel cycle are not affected by the specific fuel cycle selected.

6.2.2.6 Land Use Impacts

The total annual land requirement for the fuel cycle supporting a model 1000-MW(e) LWR is about 46 ha (113 acres). About 5.3 ha (13 acres) are permanently committed, and 41 ha (100 acres) are temporarily committed. (A "temporary" land commitment is a commitment for the life of the specific fuel-cycle plant; e.g., mill, enrichment plant, or succeeding plants. On abandonment or decommissioning, such land can be used for any purpose. "Permanent" commitments represent land that may not be released for use after permanent storage, plant shutdown, and/or decommissioning.) Of the 41 ha per year of temporarily committed land, 32 ha (79 acres) are undisturbed and 9 ha (22 acres) are disturbed. Considering common classes of land use in the United States, fuel-cycle land-use requirements to support the model 1000-MW(e) LWR do not represent a significant impact. As a comparison, a coal-fired power plant of 1000-MW(e) capacity using strip-mined coal requires the disturbance of about 81 ha (200 acres) per year for fuel alone.

6.2.2.7 Water Use Impacts

The principal water-use requirement for the fuel cycle supporting a model 1000-MW(e) LWR is that required to remove waste heat from the power stations supplying electrical energy to the enrichment step of this cycle. Of the total annual requirement of 43 x SUP>6 m^3 (11.4 x 10^9 gal), about 42 x 10^6 m^3 (11.1 x 10^9 gal) are required for this purpose, assuming that these plants use once-through cooling. Other water uses involve the discharge to air (e.g., evaporation losses in process cooling) of about 0.6 x 10^6 m^3 (160 x 10^6 gal) per year and water discharged to ground (e.g., mine drainage) of about 0.5 x 10^6 m^3 (130 x 10^6 gal) per year.

On a thermal-effluent basis, annual discharges from the nuclear fuel cycle are about 4 percent of those from the model 1000-MW(e) LWR using once-through cooling. The consumptive water use of 0.6 x 10^6 m^3/year is about 2 percent of that from the model 1000-MW(e) LWR using cooling towers. The maximum consumptive water use (assuming that all plants supplying electrical energy to the nuclear fuel cycle used cooling towers) would be about 6 percent of that of the model 1000-MW(e) LWR using cooling towers. Under this condition, thermal effluents would be negligible. The staff

finds that these combinations of thermal loadings and water consumption are acceptable relative to the water use and thermal discharges.

6.2.2.8 Fossil Fuel Impacts

Electrical energy and process heat are required during various phases of the fuel-cycle process. The electrical energy is usually produced by the combustion of fossil fuel at conventional power plants. Electrical energy associated with the fuel cycle represents about 5 percent of the annual electrical power production of the model 1000-MW(e) LWR. Process heat is generated primarily by the combustion of natural gas. This gas consumption, if used to generate electricity, would be less than 0.4 percent of the electrical output from the model plant. The staff finds that the direct and indirect consumptions of electrical energy for fuel-cycle operations are small and acceptable.

6.2.2.9 Chemical Effluents

The quantities of chemical, gaseous, and particulate effluents associated with fuel-cycle processes are given in Table S-3. The principal species are sulfur oxides, nitrogen oxides, and particulates. Judging from data in a Council on Environmental Quality report (seventh annual report), these emissions constitute an extremely small additional atmospheric loading in comparison with these emissions from the stationary fuel-combustion and transportation sectors in the United States (i.e., about 0.02 percent of the annual national releases for each of these species). These emissions can also be compared with those from coal-fired generation of electricity. As an example, one paper reported that in comparison with a coal-fired power plant of the same size with abatement system, a 1300-MW(e) nuclear power plant eliminates annually emission to the air of about 2,000 tons of particulates, 8.5 million tons of CO_2, 12,000 tons of SO_x, and 6,000 tons of NO_x. (Souza and Bennett 1989). The staff believes that such small increases in releases from the nuclear fuel cycle of these pollutants are acceptable.

Impacts from the chemical and physical properties of the materials handled by fuel-cycle licensees can also occur. For example, on January 4, 1986, an overfilled cylinder containing UF_6 ruptured while it was being heated in a steam chest at the Sequoyah Fuels Conversion Facility near Gore, Oklahoma (NUREG-1179). One worker died because he inhaled hydrogen fluoride fumes, a reaction product of UF_6 and airborne moisture. Several other workers were injured, but none seriously, and there was on-site and off-site contamination with hydrogen fluoride and uranyl fluoride, a second reaction product.

Liquid chemical effluents produced in fuel-cycle processes are related to fuel enrichment, fabrication, and reprocessing operations and may be released to receiving waters. These effluents are usually present in dilute concentrations such that only small amounts of dilution water are required to reach levels of concentration that are within established standards. The flow of dilution water required for specific constituents is specified in Table S-3. Additionally, all liquid discharges into the navigable waters of the United States from plants associated with the fuel-cycle operations will be subject to requirements and limitations set forth in the NPDES permit. Tailings solutions and solids are generated during the milling process. Based on Table S-3, these solutions and solids are not released in quantities sufficient to have a significant impact on the environment.

6.2.3 Sensitivity to Recent Changes in the Fuel Cycle

The values given in Tables S-3 (10 CFR 51.51) and S-4 (10 CFR 51.52) were calculated from industry averages for the performance of each type of facility or operation within the fuel cycle. Recognizing that this approach meant that there would be a range of reasonable values for each estimate, the staff followed the policy of choosing the assumptions or picking the factors to be applied so that the calculated values would not be underestimated. This approach was intended to ensure that the actual environmental impacts would be less than the quantities shown in Tables S-3 and S-4 for all nuclear power plants within the widest range of operating conditions.

This discussion on the sensitivity of the estimates to changes in assumptions or factors used by the staff in making the environmental impact analyses is provided below in examples to show the degree of conservatism used in developing estimates and thus to give an indication of the uncertainty of the estimates when they are applied to a particular nuclear

power plant or to the plant's operations within the applicable regulations. The methodology was deliberately constructed to estimate impacts closer to the upper bound than to the mathematical average or median. Considering this approach, one can judge that the level of precision in the estimates is about 10% at best, probably no more than single-significant-digit accuracy in most cases. For this reason, and to simplify the presentation, many subtle fuel-cycle parameters and interactions were recognized by the staff as being less than the precision of the estimates and were ignored or mentioned briefly to show that they were considered but had no effect on the Table S-3 and S-4 calculations. The following example shows the conservatism of Tables S-3 and S-4 with respect to impacts on the environment.

To determine the quantity of fuel required for a year's operation of a nuclear power plant, the staff defined the model reactor as a 1000-MW(e) light-water-cooled reactor operating at 80 percent capacity with a 12-month fuel reloading cycle and an average fuel burnup of 33,000 MWd/MTU. This is a reactor reference year (RRY). The sum of the initial fuel loading plus all of the reloads for the lifetime of the reactor can be divided by the now assumed 60-year (40-year initial license term and 20-year renewal license term) lifetime to obtain an average annual fuel requirement. This was done for both boiling-water reactors (BWRs) and pressurized-water reactors (PWRs), and the higher annual requirement, 35 metric tonnes (MT) of uranium made into fuel for a BWR, was chosen as the basis for the RRY. Since the original estimates in 1979 were made for Table S-3, a number of fuel management improvements have been adopted by nuclear power plants to achieve higher performance and to reduce fuel and separative work (enrichment) requirements. These improvements reduce the annual fuel requirement by 10 to 15 percent. Further, the average plant capacity factor achieved by reactors operating in the United States has been below the assumed 80 percent capacity factor in every reporting period to date, meaning that the consumption of fuel has been below estimated amounts. Some more recent studies have assumed average capacity factors of 70 to 75 percent, indicating a reduction of 6 to 12 percent in annual fuel consumption.

Today's once-through fuel cycle could be expected to require 15 to 20% more uranium from mining and milling to compensate for no recovery and recycle of uranium from spent fuel. However, this increase in requirements is assumed to be offset by the decreases from improved fuel management and the lower average operating capacity factor; and the average fuel requirement for 1 RRY is still estimated to be 182 MT of U_3O_8 (35 MTU), as it was in WASH-1248. However, there has been another change of even greater significance in the elimination of U.S. restrictions on importation of foreign uranium. The economic conditions of the uranium market now and in the foreseeable future favor full utilization of foreign uranium at the expense of the domestic uranium industry. These market conditions have forced the closing of most U.S. uranium mines and mills, substantially reducing the environmental impacts in the U.S. from these activities. However, the Table S-3 estimates have not been reduced accordingly to ensure that these impacts, which have been experienced in the past and may be fully experienced again in the future, are considered. This fact suggests that the environmental impacts of mining and milling could drop to levels far below those given in Table S-3.

In a somewhat similar situation, the Table S-3 estimates for enrichment are based on the gaseous diffusion process, which has been used in the United States since the earliest days of the nuclear power program. In this process, there can be significant changes in uranium feed requirements as a result of changes in the quantity of ^{235}U left in the process tails. The range of tails assay is generally from 0.16 to 0.30 wt-percent ^{235}U, and the value assumed in making Table S-3 estimates is 0.25 percent. If the value of 0.16 percent had been chosen, 16 percent less uranium feed would be required, and environmental impacts (except those associated with enrichment) would be correspondingly lower. At 0.30 percent tails, uranium requirements would increase by 11 percent and environmental impacts would be higher. Far greater potential changes would come from the use of enrichment services from overseas or from the use of centrifuge technology for enrichment in the United States. The largest impacts of the gaseous diffusion process are attributable to the large requirement for electric energy to run the plant (especially to the assumption that the electricity will come from coal-fired power plants) and to the large amount of cooling water used in the gaseous diffusion process equipment. The centrifuge process uses 90 percent less electrical energy and therefore would have far lower impacts attributable to coal-fired power plants and the use of cooling water. Clearly, when overseas enrichment services are utilized, domestic impacts from U.S. enrichment plants would drop nearly to zero. These potential reductions are not reflected in Table S-3 estimates. Because there are currently no centrifuge enrichment plants in the United States, this potential reduction is not reflected. However, there is an application pending with the NRC to construct such a plant in

the U.S. The assumption of continued use of United States diffusion enrichment services ensures that environmental impacts are not underestimated.

It may be noted that the recycling of uranium in spent fuel would have only minor effects on enrichment because the recycled uranium has about the same ^{235}U assay as fresh natural uranium and would thus require about the same amount of enrichment. There is an increase in the concentration of the ^{236}U isotope in recycled uranium. This acts as a "poison" in the nuclear fuel, requiring more ^{235}U to overcome it. Each kilogram of ^{236}U that is present in the recycled fuel requires an additional 0.3 kg of ^{235}U to compensate for it. In total, the few kilograms of ^{236}U in the fuel cause increases of about 2 to 4 percent in the enrichment impacts.

There is only one U.S. plant currently converting uranium oxide product from the mills to UF_6 feed for the enrichment plant. The UF_6 conversion plant uses a "dry" process using gaseous reagents. Formerly, a "wet" process that starts with dissolving the yellow cake in nitric acid and purifying it by solvent extraction was also used. In the "dry" process, final purification is accomplished by fractional distillation of the UF_6; impurities are eliminated as volatile compounds or as solid wastes. In the "wet" process, many impurities are eliminated in the aqueous phase from solvent extraction. In both cases, environmental releases are so small that changing from 100 percent use of one process to 100 percent use of the other would make no significant difference in the totals given in Table S-3 or S-4. The assumption that half is processed by each method does not contribute significantly to the error band of the totals.

In the fuel fabrication plants, it has been assumed that the UF_6 from enrichment will be converted to UO_2 by the ammonium diuranate "wet" process. An alternative "dry" process for direct conversion of UF_6 to UO_2 powder is being introduced as obsolete facilities are replaced or as new capacity is added. This change reduces environmental impacts, but the impacts from fuel fabrication are so small that the changes are not significant.

Factors related to reactor operation can have a significant effect on the fuel cycle. The original Tables S-3 and S-4 were based on a 12-month fuel reloading cycle. Current practice favors an 18-month cycle although in certain circumstances, the original 12-month cycle or a longer 24-month cycle might be favored. Parametric studies show that producing the higher enrichment fuel needed for higher burnup requires an increase of about 5 percent in the natural uranium feed stream for each 6-month extension of the reload interval. Similarly, enrichment impacts increase by about 5 percent with each 6-month extension of the reload cycle. However, the higher burnup of fuel achieved in the longer reload cycles reduces the average annual output of spent fuel by as much as 45 percent.

The values shown in Tables S-3 and S-4 of 10 CFR Part 51 are conservative estimates originally developed on the basis of an average fuel irradiation (burnup) of 33,000 MWd/MTU. Discussions and analyses in NUREG/CR-5009 (PNL-6258), *Assessment of the Use of Extended Burnup Fuel in Light Water Power Reactors*, February 1988, show that the burnup level of fuel up to 60,000 MWd/MTU will not result in environmental impacts that are greater than the values currently in Tables S-3 and S-4, and, in many instances, are less (for example, see Table S.1 on p. viii of NUREG/CR-5009). Thus no revision to these tables would be required as a result of extended fuel burnup up to 60,000 MWd/MTU. Experience in handling fuel with burnups over 55,000 MWd/MTU and up to 5.5 percent ^{235}U enrichment has not revealed any unresolved safety concerns (NUREG/CR-5009 p. 1-7).

The reduction in the annual output of spent fuel at high burnup would correspondingly reduce the environmental impacts associated with transportation of spent fuel, with reprocessing, and with waste disposal on or off site. There would also be a decrease in occupational exposure to radiation because of the reduction in processing and handling requirements. Population radiation doses would be lower because of the reduced number of shipments per year.

There are other significant changes that would apply to reprocessing if fuel recycle were to be undertaken in the United States in the future. Estimates for reprocessing impacts were based on the Barnwell and Exxon reprocessing plant designs of the 1970s. The radioisotope release fractions used in the 1976 report (NUREG-0116) are now considered to be conservative by at least two orders of magnitude in comparison to current design values. Also, the original Table S-3 assumption that 100 percent of the volatile radioisotopes and compounds would be released is no longer valid. EPA

regulations in 40 CFR Part 190 require that, after 1983, releases of ^{85}Kr and ^{129}I be limited to 50,000 Ci/GW-year and 5 mCi/GW-year, respectively. Because the model reactor that is the basis for Tables S-3 and S-4 values produces 0.8 GW-years of electricity, the EPA limits translate to 40,000 Ci/RRY and 4 mCi/RRY, respectively. Because plants will not be permitted to operate in violation of the EPA requirements, the current Table S-3 values are even more conservative, taking into account compliance with the new EPA requirements. A further EPA requirement is that releases of alpha-emitting transuranic elements with half-lives longer than 1 year must be limited to 0.5 mCi/GW-year, or 0.4 mCi/RRY. This limit for transuranic elements required no change in the Table S-3 estimate, which was already well below the new standard.

Another conservatism in the NUREG-0116 estimates for Table S-3 is an assumption of a cooling time of 160 d between the discharge of spent fuel from the reactor and the reprocessing of the fuel. This 160-d cooling period was based on the optimum for recycling plutonium as well as uranium. With the recycling of uranium only or with the present once-through mode of operation, there is no incentive to keep the cooling time short, and, indeed, virtually all spent fuel in storage today has been cooling for years. In comparison to 160-d-old spent fuel, fuel that has been cooled 1 year or more would have its radioactivity reduced by at least 50 percent and its radioactive decay heat emission similarly reduced. The effect of cooling for 5 years or more on site, the age range of most spent fuel today, is to reduce the radioactivity and the decay heat by more than 90 percent; therefore certain radioisotope inventory may be as low as 10 percent of the amount shown in Table S-3, in which case dose commitments and potential health effects calculated for Table S-3 releases would be overestimated.

One effect of going to higher fuel burnup is to increase the formation of transuranic elements, with the result that spontaneous neutron emission from transuranic elements becomes an important shielding consideration along with shielding for the gamma radiation. This fact has potential effects on the transportation of spent fuel. At the time of discharge from the reactor, the radioactivity and decay heat of high-burnup fuel may be up to 25 percent higher at 60,000 MWd/MTU, but this increase diminishes as the cooling time is lengthened. The emission of neutrons also decreases with longer cooling. Gamma radiation is shielded with lead or other dense materials, while neutrons are best shielded by water and neutron-absorbing materials such as boron or cadmium. It has been shown that present spent fuel transportation casks can be made safe for high-burnup fuel by adding boron to the cooling water in the casks. Longer cooling times would increase the margin of safety. With the large inventory of spent fuel that has accumulated, the age of any spent fuel that is reprocessed or transported to a repository is likely to be many years. At the conclusion of the hearings on reprocessing and waste management (Dockets 50-277, 50-278, 50-320, 50-354, and 50-355, Consolidated Hearing on Radon Before the Appeal Board), the Hearing Board concluded that 5 years would be a reasonable value to use in making estimates. The scenario that is visualized today for emplacement of spent fuel and high-level waste in a geologic repository calls for this final disposal to occur after the spent fuel or waste is at least 10 or more years old. Longer cooling times on site reduce the impact on the environment and increase the margin of safety once the fuel is being transported.

The NRC regulations for geologic disposal of high-level radioactive waste (10 CFR Part 60) limit the releases of radioactive material to the accessible environment. In addition to satisfying an overall performance objective to be established by the EPA, the basic requirements are that there should be no leakage from the waste packages in the first 300 to 1,000 years and that the annual releases from the engineered barrier system thereafter should not exceed one part in 100,000 of the total inventory of each radionuclide calculated to be present 1,000 years following permanent closure of the repository. These values are conservative because no credit is taken for chemical or physical retardation and for additional decay of radionuclides during transport through groundwater within the controlled zone prior to release to the accessible environment. In summary, the discussion above shows that the Table S-3 estimates of environmental impacts are higher than the actual impacts would be under any foreseeable combination of reactor and fuel cycle operating conditions, including higher fuel burnup, and any future license renewal activities. One of the greatest changes would come from the use of foreign uranium and foreign enrichment services, which could easily reduce U.S. environmental impacts from the front end of the fuel cycle by factors of 10 to 100. Significant uncertainties are also associated with the estimates of environmental releases from high-level waste handling, storage, and disposal. Lacking knowledge of the actual operation of the facilities that will be licensed or relicensed in the future, the staff has

estimated that releases will be at the maximum levels permitted by NRC and EPA regulations for releases from the engineered barriers to repository groundwater, whereas some engineering tests indicate that it may be possible to keep releases to much lower levels. The Table S-3 estimates could easily be high under any regulated change in operating, handling or storage conditions of high-level waste; they are not likely to be low.

6.2.4 Conclusions

The radiological and nonradiological environmental impacts of the uranium fuel cycle have been reviewed. The review included a discussion of the values presented in Table S-3, an assessment of the release and impact of ^{222}Rn and of ^{99}Tc, and a review of the regulatory standards and experience of fuel cycle facilities. Although the radiological release values presented in Table S-3 and in the discussion of ^{222}Rn and ^{99}Tc were intended to be within regulatory limits (except for ^{85}Kr and ^{129}I), not attempt was made to use realistic assumptions that would reflect the success of ALARA programs and the history of releases and doses generally being well under regulatory requirements. For assessing the radiological impacts of license renewal, the Commission has indicated that impacts are of small significance if doses and releases do not exceed permissible levels in the Commission's regulations.

The radiological impacts of the uranium fuel cycle on individuals off site have been considered within the framework of Table S-3 and supplemental analyses of ^{222}Rn and ^{99}Tc. Given the available information applicable regulatory requirements, the Commission has concluded that, other than for the disposal of spent fuel and high-level waste, these impacts on individuals from radioactive gaseous and liquid releases will remain at or below the Commission's regulatory limits. Accordingly, the Commission concludes that off-site radiological impacts of the fuel cycle (individual effects from other than the disposal of spent fuel and high-level waste) are small. ALARA efforts will continue to apply to fuel-cycle activities. This is a Category 1 issue.

The radiological impacts of the uranium fuel cycle on human populations over time (collective effects) have been considered within the framework of Table S-3. The 100-year environmental dose commitment to the U.S. population from the fuel cycle, except for high-level waste and spent-fuel disposal, is calculated to be about 14,800 person-rem, or 12 cancer fatalities, for each additional 20-year power reactor operating term. Much of this, especially the contribution of radon releases from mines and tailing piles, consists of tiny doses summed over large populations. This same dose calculation can theoretically be extended to include many tiny doses over additional thousands of years as well as doses outside the U.S. The result of such a calculation would be thousands of cancer fatalities from the fuel cycle, but this result assumes that even tiny doses have some statistical adverse health effect that will not ever be mitigated (for example no cancer cure in the next thousand years) and that these dose projection over thousands of years are meaningful. However, these assumptions are questionable. In particular, science cannot rule out the possibility that there will be no cancer fatalities from these tiny doses. For perspective, the doses are very small fractions of regulatory limits, and even smaller fractions of natural background exposure to the same populations. No standards exist that can be used to reach a conclusion as to the significance of the magnitude of the collective radiological effects. Nevertheless, some judgment as to the regulatory NEPA implication of this issue should be made, and it makes no sense to repeat the same judgment in every case. The Commission concludes that these impacts are acceptable in that these impacts would not be sufficiently large to require the NEPA conclusion, for any plant, that the option of extended operation under 10 CFR 54 should be eliminated. Accordingly, while the Commission has not assigned a single level of significance for the collective effects of the fuel cycle, this issue is considered Category 1.

The impacts associated with the high-level-waste and spent-fuel disposal component of the fuel cycle also involve a level of uncertainty. There are no current regulatory limits for off-site releases of radionuclides for the current candidate repository site. However, if we assume that limits are developed along the lines of the 1995 National Academy of Sciences report and that, in accordance with the Commission's Waste Confidence Decision, a repository can and likely will be developed at some site that will comply with such limits, peak doses to virtually all individuals will be 100 mrem/year or less. However, while the Commission has reasonable confidence that these assumptions will prove correct, there is considerable uncertainty because the limits are yet to be developed and no repository application has been completed or reviewed. In addition, uncertainty is inherent in the models used to evaluate possible pathways to the human environment. The National Academy report indicated that 100 mrem/year should be considered as a

starting point for limits for individual doses, but notes that some measure of consensus exists among national and international bodies that the limits should be a fraction of the 100 mrem/year. The lifetime individual risk from 100 mrem/year dose limit is about 3×10^{-3}. Doses to populations from disposal cannot now (or possibly ever) be estimated without very great uncertainty.

Estimating cumulative doses for high-level-waste and spent-fuel disposal to populations over thousands of years is more problematic. The likelihood and consequences of events that could seriously compromise the integrity of a deep geologic repository were evaluated by the Department of Energy in the *Final Environmental Impact Statement: Management of Commercially Generated Radioactive Waste*, October 1980. The evaluation estimated the 70-year whole-body dose commitment to the maximum individual and to the regional population resulting from several modes of breaching a reference repository in the year of closure, after 1,000 years, after 100,000 years, and after 100,000,000 years. The release scenarios covered a wide range of consequences from the limited consequence of humans accidentally drilling into a waste package in the repository to the catastrophic release of the repository inventory by a direct meteor strike. Subsequently, the NRC and other federal agencies have expended considerable effort to develop models for the design and for the licensing of a high-level-waste repository, especially for the candidate repository at Yucca Mountain. More meaningful estimates of doses to population may be possible in the future as more is understood about the performance of the proposed Yucca Mountain repository. Such estimates would involve very great uncertainty, especially with respect to cumulative population doses over thousand of years. The standard proposed by the NAS is a limit on maximum individual dose. The relationship of potential new regulatory requirements, based on the NAS report, and cumulative population impacts has not been determined, although the report articulates the view that protection of individuals will adequately protect the population for a repository at Yucca Mountain. However, EPA's generic repository standards in 40 CFR 191 generally provide an indication of the order of magnitude of cumulative risk to population that could result from the licensing of a Yucca Mountain repository, assuming the ultimate standards will be within the range of standards now under consideration. The standards in 40 CFR 191 provide for the protection of the population by imposing "containment requirements" that limit the cumulative amount of radioactive material released over 10,000 years. The cumulative release limits are based on EPA's population impact goal of 1,000 premature cancer deaths worldwide for a 100,000-metric tonne (MTHM) repository.

Despite all the uncertainty surrounding the effects of the disposal of spent fuel and high-level waste, some judgment as to the regulatory NEPA implications of these matters should be made, and it makes no sense to repeat the same judgment in every case. Even taking the uncertainties into account, the Commission concludes that these impacts are acceptable in that these impacts would not be sufficiently large to require the NEPA conclusion, for any plant, that the option of extended operation under 10 CFR 54 should be eliminated. Accordingly, while the Commission has not assigned a single level of significance for the impacts of spent-fuel and high-level-waste disposal, this issue is considered Category 1.

Data on the nonradiological impacts of the fuel cycle are provided in Table S-3. These data have not been adjusted for the permanent disposal of high-level waste and spent fuel at the candidate site at Yucca Mountain. However, any changes in the data specific to Yucca Mountain would be minor. The nonradiological environmental impacts from any resource use or effluent datum specified in Table S-3 are assumed to be proportional to the magnitude of the datum. The standard of significance of the environmental impacts associated with Table S-3 is based on one of several relative comparisons.

Land requirements are compared to those for a coal-fired power plant that may be assumed to replace the nuclear capacity if the operating license is not renewed. The LWR fuel cycle requires only 10 percent of the temporarily committed land and 9.5 percent of the permanently committed land that would be required by replacement with coal-fired capacity. A conclusion on the relative land use impact between nuclear and coal should take into consideration differences in the quality and the opportunity cost of the land involved in each fuel cycle. If the quality and opportunity cost of the land were equivalent, then it would be reasonable to say that land requirements for the uranium fuel cycle (at 20 to 30 percent of those for the coal fuel cycle) are relatively small. If much of the land involved in the uranium fuel

cycle is of lower quality and has a lower opportunity cost than does the land used in the coal fuel cycle, then the land has relatively lower value, and land requirements could be considered small for relative requirements beyond 30 percent. If these postulates are accepted, then the land requirements of about 10 percent given in Table S-3 are clearly small.

Water requirements for the uranium fuel cycle are compared to the annual requirements for an LWR. The amount of water withdrawn from surface and ground water and discharged to air by activities within the fuel cycle represents only 2 percent of the annual discharges to air of an LWR with cooling towers. The fuel cycle discharges are spread among facilities involved in the various stages of the fuel cycle; thus the water discharge to air from any one of these facilities will be less than the 2 percent. The environmental impacts of water withdrawal, use, and discharge from LWRs with cooling towers is reviewed in Chapter 3, and these discharges are found to have only small, or in special but unusual circumstances moderate, environmental impacts. Given that the water discharged to the air from other fuel cycle facilities for a RRY is only a small fraction of the discharge from an LWR, the environmental consequences will be even smaller. The amount of water withdrawn from surface and ground water and discharged to water bodies and to the ground represents only 4 percent of the annual discharges to water bodies and the ground of an LWR with once-through cooling. The fuel cycle discharges are spread among facilities involved in the various stages of the fuel cycle; thus the water discharges from any one of these facilities will be less than the 2 percent. The environmental impacts of water withdrawal and discharge from LWRs with once-through cooling is reviewed in Chapter 3, and these discharges are found to have small environmental impacts. Given that the water discharged to water bodies and to the ground from other fuel cycle facilities for an RRY is only a small fraction of the discharge from an LWR, the environmental consequences will be even smaller.

The fossil fuel (coal and natural gas) consumed to produce electrical energy and process heat during the various phases of the uranium fuel cycle results in a considerable net saving in the use of resources and chemical effluents over the use that would occur if the electrical output from the LWR were supplied by a coal-fired plant. The use of coal and natural gas in the uranium fuel cycle allows the production of electricity with nuclear fuel, which results in a substantial reduction in the requirements for coal and natural gas as fuels to produce electricity. Not only are the fossil fuel requirements small per RRY; there is a net saving in the use of fossil fuel compared to replacing the nuclear-generating capacity with coal-fired capacity.

The gaseous effluents SO_x, NO_x, hydrocarbons, CO, and particulates listed in Table S-3 are the consequence of the coal -fired electrical energy used in the uranium fuel cycle. The volume of effluent is equivalent to that of a quite small [45-MW(e)] coal-fired plant; thus the contribution to the degradation of air quality is small. The generation of electricity with nuclear rather than coal-fired power will result in a net improvement in air quality. For these reasons the impact of these effluents is considered small. Gaseous releases of fluorine and hydrogen chloride are at concentrations below state standards and below levels that impact human health. The impact of these effluents is small.

The liquid effluents listed in Table S-3 are present in dilute concentrations and are readily dilutable to meet effluent standards such that environmental impacts are negligible. The impacts from these liquid effluents are considered small.

Tailings solutions and solids generated during the milling process are not released in quantities sufficient to have a significant impact on the environment. Their impact on the environment is considered small.

The aggregate nonradiological impact of the uranium fuel cycle resulting from the renewal of an operating license for any plant is found to be small. License renewal of an individual plant is so indirectly connected to the operation of fuel-cycle facilities that it is meaningless to address the mitigation of the impacts identified above. This is a Category 1 issue.

6.3 Transportation

6.3.1 Introduction

This section addresses both the radiological and nonradiological environmental impacts resulting from shipments of low-level radioactive waste (LLW) and mixed waste to off-site disposal facilities and of spent fuel to a monitored retrievable storage (MRS) or permanent repository. The nonradiological impacts are traffic density, weight of the loaded truck or railcar, heat from the fuel cask, and transportation accidents. The radiological impacts include possible exposures of transport workers and the general public along transportation routes. Radiation exposure to these groups also may occur through accidents along transportation corridors. Generic values for the environmental effects of transporting fuel and waste to and from reactors are provided in Table S-4.

Table S-4 "Environmental impact of transportation of fuel and waste to and from one light-water-cooled nuclear power reactor," is a summary impact statement concerning transportation of fuel and radioactive wastes to and from a reactor. The table is divided into two categories of environmental considerations: (1) normal conditions of transport and (2) accidents in transport. The normal conditions of transport consideration are further divided into environmental impact, exposed population, and range of doses to exposed individuals per reactor reference year. The "accidents in transport" consideration is concerned with environmental risk. Under "normal conditions of transport," the environmental impacts of the heat of the fuel cask in transit, weight, and traffic density are described. Also the number and range of radioactive doses of the transportation workers and of the general public are described. Under "accidents in transport," the environmental risk of radiological effect and common nonradiological causes such as fatal and nonfatal injuries and property damage are described. To indicate that Table S-4 adequately describes the environmental effects of the transportation of fuel and waste to and from the reactor, the reactor licensee must state that the reactor and this transportation either meet all of the conditions in paragraph (a) of 10 CFR 51.52 or all of the conditions in paragraph (b) of 10 CFR 51.52. Subparagraphs 10 CFR 51.52(a)(1) through (5) delineate specific conditions the reactor must meet to use Table S-4 as part of its environmental report. Subparagraph 10 CFR 51.52(a)(6) states, "The environmental impacts of transportation of fuel and waste to and from the reactor, with respect to normal conditions of transport and possible accidents in transport, are as set forth in Summary Table S-4 in paragraph (c) of this section; and the values in the table represent the contribution of the transportation to the environmental costs of licensing the reactor." Paragraph 10 CFR 51.52(b) states that reactors not meeting the conditions of 10 CFR 51.52(a) shall make a full description and detailed analysis for their reactor equivalent to Table S-4. Because the reactor must continuously meet the conditions of 10 CFR 51.52(a) to use Table S-4 in its environmental statement or make a full description and detailed analysis for their reactor equivalent to Table S-4, the conditions requiring the use of Table S-4 or its equivalent as an environmental transportation statement are continuously reviewed and therefore will be the same in the relicensing period as in the initial licensing period. Rail and truck transport corridors should safely accommodate increased shipments of radioactive waste associated with license renewal. The radiological and nonradiological environmental impacts of transportation of fuel and waste from an LWR are shown to be small.

To address the impacts from transportation of LLW associated with license renewal, the additional volumes of LLW from refurbishments related to license renewal, as well as from an additional 20 years of normal operations, have been compared with baseline information on current volumes of LLW that are shipped from nuclear power plants to licensed disposal facilities. In the case of mixed waste that is currently stored on site, the amount of waste that is likely to require off-site disposal when an off-site disposal facility becomes available is considered. Finally, in the case of spent fuel from nuclear power plants, estimates have been made of the additional amount of spent fuel that will be generated, assuming that all currently operating reactors continue to operate and store-spent fuel on site until a spent-fuel repository (or MRS) is made available, which probably will not occur before 2010 (DOE/RW-0006).

6.3.2 Table S-4--Environmental Impact of Transportation of Fuel and Waste to and from One Light-Water-Cooled Nuclear Power Reactor

6.3.2.1 Low-Level Waste

The volume of LLW disposed of annually (at licensed disposal facilities) from nuclear power plants varies by type of reactor. In e average PWR disposed of approximately 8,800 ft^3/year (250 m^3/year), while the average BWR disposed of

about 19,700 ft^3/year (558 m^3/year). These volumes were disposed of through approximately 35 annual shipments from PWRs and 59 annual shipments from BWRs (EPRI NP-5983).

The majority of routine LLW transported from plants is made up of Class A wastes such as contaminated trash and other compacted material packaged in 55-gal drums. Normally, these drums contain less than 20 Ci of radioactivity. A small percentage contain more than 100 Ci and are shipped as Class B waste. Accident data have been compiled since 1971 involving commercial LLW. During this time, only four transportation accidents for all categories of shippers have involved the release of commercial LLW. None of these accidents involved serious injuries or fatalities attributable to the radioactive content of the shipments (Garcia 1992).

As a result of environmental impact studies on waste transportation that were undertaken in the 1970s, measures to minimize occupational and population exposure from all forms of radiological waste have been widely implemented by the nuclear industry, including operational restrictions on transport vehicles, ambient radiation monitoring, special packaging requirements, imposition of licensing standards by NRC (which ensure proper waste certification by testing and analyzing packages), changes in waste form to minimize the release of radioactivity in transit (such as cementing or solidifying liquid wastes), and training of emergency personnel to respond to mishaps (NUREG-0170; Levin 1981; ORNL/TM-9780/V3; DOE 1989). In accordance with licensing requirements and international standards, protection against worker and population exposure is provided principally by the waste packaging (NUREG-0170; O'Sullivan 1988).

In regard to footnote d of Table S-4, although the environmental risk of radiological effects stemming from a transportation accident has not been numerically quantified, the study *Shipping Container Response to Severe Highway and Railway Accidents* (NUREG/CR-4829) confirms that the radiological risk of transportation accidents is small. NUREG/CR-4829 is summarized in NUREG/BR-0111, in which the study results are compared with a 1977 study (NUREG-0170). The 1977 study evaluated the risk for all radioactive material shipments, including spent fuel. The evaluations indicated a radiological risk from transportation accidents of one latent cancer fatality every 59 years for all projected 1985 radioactive material shipments. Most of this risk was associated with shipments of medical radioisotopes. The contribution from spent fuel shipments was 2.5 percent of this estimate. The 1987 study included a more detailed approach to the calculation of radiological hazards and concluded that the hazard from spent fuel shipments is less than one-third of that estimated in the 1977 study.

6.3.2.2 Mixed Waste

Mixed waste from reactors accounts for only a small percentage of annual LLW generation. Only very limited off-site disposal facilities for mixed waste have been available since 1985 (NUREG/CR-5938). Utilities are finding ways to treat some of their mixed waste so that it is no longer hazardous, thus making it possible to dispose of the radioactive component along with other LLW (NUREG/CR-5938). The remainder of mixed waste, however, is currently stored on site.

6.3.2.3 Spent Fuel

The only spent-fuel shipments from nuclear power plants have been from one plant to another or to Department of Energy (DOE) facilities or fuel reprocessing plants. Table S.4 Rule (54 FR 187; 10 CFR 51.52) reflects the state and federal restrictions that trucks used to ship spent fuel are limited to 73,000 lb of capacity, while rail cars are limited to 100 tons/cask/car. Also, under Table S-4, each reactor is expected to make less than one shipment per day by truck and fewer than three per month by rail.

A concern in spent-fuel shipment is the risk of theft or sabotage leading to a release that could pose a major risk of occupational and population exposure and to the environment. Spent-fuel shipments, however, have proven to be unattractive targets for theft or sabotage. Shipping casks are designed to withstand severe transportation accidents and are resistant to small-arms fire and high-explosive detonation (NUREG-0170; DOE/RW-0065).

States and communities along transportation corridors may impose additional restrictions on the transport of nuclear waste. These restrictions, which are designed to protect health, safety, and the environment, are permitted if they afford an equal or greater level of protection, do not cause undue burdens on commerce, and do not discriminate against particular transporters (Pub. L. 93-633; OTA-SET-304). There has been dramatic growth in local ordinances pertaining to special permitting, prenotification, centralized dispatching and communications, and vehicle manifesting (Anderson 1981; Smith 1982; ORNL/TM-9563).

6.3.3 Effects of License Renewal

During the license renewal period, LLW annual shipments from BWRs and PWRs are expected to show a temporary increase (Section 6.3) in the generally decreasing trend. During the 10-year refurbishment period for the conservative license-renewal scenario, the average annual LLW shipments could increase by 96 percent (for a total of 69 shipments) per PWR and 31 percent (for a total of 77 shipments) per BWR. The increase in waste shipments would be considerably less during the subsequent 20 years of operation. In either case, however, rail and truck transport corridors should easily accommodate the increase in waste shipments.

Within the study sample, Cook, Washington Nuclear Project 2 (WNP-2), San Onofre, Vermont Yankee, and Comanche Peak are under the jurisdiction of compacts and agreement states that do not anticipate additional regulations governing the shipment of LLW from reactors to licensed disposal sites. In the case of WNP-2, there is a relatively short distance between the plant and the Hanford site, the licensed LLW facility for the Northwest Compact. The same applies to San Onofre, which expects to ship LLW to a facility in Ward Valley (25 miles west of Needles), to be operated by U.S. Ecology (*Radioactive Exchange* 1989). Greater distances between plants and disposal facilities will complicate the establishment of a corridor-by-corridor management system because of the number of jurisdictions involved. Staff estimates that transportation distances for some plants to disposal facilities could be as much as 2000 miles. Mixed-waste shipments to a licensed disposal facility (when available) should continue to be a small percentage of total LLW volumes shipped for disposal.

The original analysis on which Table S-4 was based is the report NUREG-75/038, *Environmental Survey of Transportation of Radioactive Materials to and from Nuclear Power Plants, Supplement 1*, published in April 1975. This report assumed transportation distances for spent fuel and high-level wastes to be less than 1000 miles for almost all reactors except those located in the far western states. Shipping distances for other packaged wastes were assumed to be even shorter. In accordance with the Nuclear Waste Policy Amendments Act of 1987 (Pub. L. 100-203, Title V, Subtitle A, 101 stat. 1330-227, December 22, 1987), a possible high-level waste repository is being characterized at Yucca Mountain in Nevada. Therefore, the reactors in the eastern half of the country will have shipping distances near 2000 miles for spent fuel and high level wastes. However, the environmental impacts of transportation are so small that even an increase by a factor of 10 would not significantly change the total environmental impacts of the whole fuel cycle. Therefore, the values in Table S-4 do not need to be updated, because the conservatism (see Section 6.2.3) built into these estimates ensures that the total fuel cycle environmental impacts per reactor are not underestimated. Table S-4 would bound the proposed renewal of licenses currently permitted under 10 CFR 2.109 and 50.51.

For spent fuel, DOE has decided that when a permanent repository or MRS becomes available, acceptance allocation priority will go to the oldest spent fuel, on an industry-wide basis (DOE/RW-0220). For purposes of estimation, DOE assumes that if a spent-fuel repository opened in 2003, total storage requirements from all utilities (based on the above-mentioned priority system) would range from 12,200 metric tons (from 83 reactors) to 20,000 metric tons (from 107 reactors) (DOE/RW-0220). Thus, total spent-fuel volume per reactor would range from 147 to 187 metric tons. Assuming that license renewal would, on average, increase spent-fuel generation per reactor by 50 percent, the incremental amount of spent fuel that would be added to this volume would range between 73 and 93 metric tons. This would further translate into an additional 2 to 3 days of shipments for each reactor's spent fuel under the conditions specified in Table S-4 (10 CFR 51.52). If disposal without license renewal would have required between 330 and 550 days for shipment of all spent fuel by truck to a repository, license renewal could require from 170 to 270 additional days for shipment for all relevant plants (DOE/RW-0220). Transportation distances could range up to 2000 miles.

The public radiation exposure and other potential transportation impacts resulting from radioactive waste transport have been addressed generically in Table S-4 (10 CFR 51). All dose projections in Table S-4 are presented on the basis of a reference reactor year, so estimates are dependent on neither the number of years of operation nor the particulars of operation. The doses are small, as are the potential health effects. If these impacts are increased by a factor of 2 (as would occur if waste shipments were doubled, as is approximately projected for PWR refurbishment waste), the impacts would remain small. If occupational doses for transportation workers were 8 man-rem for 200 workers, the average worker exposure of 0.04 rem/year would be only 1 percent of the occupational dose limit guidelines of 10 CFR Part 20. Individual members of the public are exposed to doses from transportation of waste far lower than the standards discussed previously in this document. The average dose received per reactor-year by members of the exposed population is estimated to be 0.0027 rem (3 rem/1100), which is far lower than the individual annual total dose standard of 0.1 rem in 10 CFR 20.1301. Assuming this exposed population received doses from transportation of waste for 20 years, the cumulative average dose would be 0.054 rem, still less than 0.1 rem. Using the risk factor of 5 cancer deaths per 10,000 rem, the risk of death from cancer by an average member of the exposed population would be 2.7×10^{-6}, which is also an acceptable risk under the EPA risk standard. The potential for adverse impacts from low-probability accidents is discussed in the previous section. Design refinements to LLW shipping containers and changes to transport systems will continue to occur during the license renewal period, which should result in even lower probability of accidents and lower releases. Changes to the latter will result from continued interaction with states, communities, and tribal nations in emergency preparedness, vehicle inspection, and manifesting on a corridor-by-corridor basis (Anderson 1981; ORNL/TM-9563; Smith 1982; EPRI NP-5933; Sprecher 1990).

6.3.4 Conclusion

The environmental impacts from the transportation of fuel and waste attributable to license renewal are found to be small when they are within the range of impact parameters identified in Table S-4. The estimated radiological effects are within regulatory standards. The nonradiological impacts are those from periodic shipments of fuel and waste by individual trucks or rail cars and thus would result in infrequent and localized minor contributions to traffic density. Programs designed to reduce risk further, which are already in place, provide for adequate mitigation. Table S-4 should continue to be the basis for case-by-case evaluations of transportation impacts of fuel and waste until such time as a detailed analysis of the environmental impacts of transportation to the proposed repository at Yucca Mountain becomes available. This issue is Category 2.

6.4 Generation and Storage of Radioactive Waste During the Term of the Renewed License

[**Prev** | **Next** | **Table of Contents**]

6.4.1 Introduction

The following discussion considers in greater detail the generation of radioactive waste at nuclear power plants during the term of a renewed operating license and the issues associated with the management of that waste. The discussion addresses LLW, including greater than Class C (GTCC) LLW; mixed waste; and spent fuel.

6.4.2 Low-level Waste

LLW is defined as radioactive waste not classified as high-level waste, transuranic waste, spent nuclear fuel, or byproduct material as defined in Section 11e.(2) of the Atomic Energy Act of 1954 as amended. LLW is classified as A, B, C or GTCC according to the half-lives and concentrations of key radionuclides. Detailed descriptions of these classes are given in 10 CFR 61. In general, requirements for waste form, stability, and disposal methods become more stringent when going from class A to GTCC.

In 1992 approximately 65 percent of the total volume of LLW in the United States was generated by non-utility sources, including academic, medical, industrial and government sectors; 35 percent was generated by nuclear power plants (de Planque 1994). However, percentages vary and have been closer to 50 percent. For example, in 1993, 51 percent was generated by utilities (NUREG-1350, Vol. 7); in 1990, 56 percent (NUREG-1350, Vol. 4); in 1989, 52 percent (NUREG-1350, Vol. 3). LLW from nuclear power plants ranges from trash suspected of being slightly contaminated to highly radioactive material such as activated structural components found within or in close proximity

to the reactor. LLW includes reactor components, tools, spent demineralizer resins, evaporator concentrates, used filters, and miscellaneous contaminated wastes such as rags, mops, paper, and protective clothing.

Additional LLW will be generated by the license renewal of nuclear power plants requiring interim on-site storage. The following discussion focuses on how projected volumes of LLW generated could affect on-site storage requirements, particularly in light of state-to-state variations in the availability of LLW disposal facilities. In this regard, it is pertinent to note that when storage of LLW extends beyond the 5-year guideline established by the NRC, and perhaps in excess of SAR projected curie or volume limits, licensees may have to secure additional license authority under 10 CFR 30 and/or 10 CFR 50 (EPRI TR-100298). Although the demand for on-site interim storage for refurbishment waste and license renewal operations is an important issue, it is one that relates primarily to the uncertainties associated with additional license authority to store the increased activity of radioactive material. Of less concern is the potential for significant environmental impacts from the storage of radioactive material.

Off-site disposal issues relevant to license renewal are also discussed below; however, it is important to stress that these issues are framed in terms of how they could affect the need for on-site interim storage rather than in terms of potential environmental impacts associated with off-site disposal facilities. Operating licenses for disposal facilities ensure minimal impacts to disposal-site workers, adjacent workers, and the environment. Under 10 CFR 61, licensed LLW disposal facilities must protect the general population from release of radioactivity, protect workers, protect inadvertent intruders after institutional controls cease, and ensure disposal site stability.

6.4.3 LLW Baseline

The following section provides information on past and present volumes of LLW generated at nuclear power plants and current practices and trends in volume reduction (VR). Subsequent sections present information pertaining to on-site storage conditions and the status of off-site disposal facilities. This baseline information is used to frame potential issues associated with LLW generated from operations and refurbishments under current licenses as well as from operations and refurbishments for an additional 20 years.

6.4.3.1 LLW Waste Generation and Volume Reduction

The first step in assessing potential issues associated with LLW generation during both the initial license period and from extended operations is to determine primary trends in the production of LLW. These trends suggest both future on -site storage and off-site disposal requirements. In general, the following analysis shows that the production of LLW is on the decline and indicates that VR activities will continue to reduce the amount of waste requiring storage and disposal during the period of the initial license and beyond.

Table 6.6 Historic and projected volume and radioactivity of routine compacted low-level radioactive waste shipped for disposal from boiling-water reactors and pressurized-water reactors: 1980-2020

End of calendar year	Volume (10^3 m^3)[a]		Radioactivity[b] (10^3 Ci)	
	Annual	Accumulated[c]	Annual	Accumulated[d]
		Boiling-water reactors		
1980	26.1	141	41	128
1981	23.0	164	42	144
1982	25.5	190	38	155
1983	22.6	212	56	183
1984	24.4	237	29	178
1985	23.1	260	28	177
1986	17.3	277	32	182
1987	14.3	292	28	183
1988	11.7	303	29	185
1989	14.2	317	32	190

1990	10.3	328	34	196
1991	15.6	343	53	221
1992	9.6	353	34	220
1993	9.5	362	34	223
1994	9.5	372	34	225
1995	9.5	381	34	228
1996	9.5	391	34	231
1997	9.5	401	34	233
1998	9.5	410	34	235
1999	9.5	420	34	238
2000	9.5	429	34	240
2001	9.5	439	34	242
2002	9.5	448	34	244
2003	9.5	458	34	246
2004	9.5	467	34	248
2005	9.5	477	34	250
2006	9.5	486	34	252
2007	9.5	496	34	254
2008	9.5	505	34	256
		Pressurized-water reactors		
1980	22.4	124	24	81
1981	22.8	147	31	102
1982	20.8	168	34	122
1983	21.4	189	32	138
1984	21.0	210	41	163
1985	18.7	229	29	171
1986	11.6	241	22	175
1987	12.2	253	25	184
1988	10.9	264	36	203
1989	13.4	277	48	231
1990	7.8	285	27	234
1991	8.1	293	24	237
1992	7.8	301	29	247
1993	7.9	309	30	257
1994	8.0	317	30	267
1995	8.1	325	30	277
1996	8.2	333	31	287
1997	8.2	341	31	297
1998	8.2	349	31	307
1999	8.3	358	31	316
2000	8.3	366	31	326
2001	8.3	374	31	334
2002	8.3	383	31	343
2003	8.3	391	31	352
2004	8.3	399	31	360
2005	8.3	407	31	368

2006	8.3	416	31	378
2007	8.3	424	31	384
2008	8.3	432	31	392

[a]One cubic meter = approximately 35.3 ft^3.

[b]Decayed from year of addition using ORIGEN 2 code; 1 Ci (curie) = 37 x 10^9 becquerels.

[c]Volume accumulation means total waste volume shipped from all plants up to and including the current year.

[d]Radioactivity accumulation is the total curies from low-level waste disposal up to and including the current year.

Source : DOE/RW-0006, Rev. 7 (1980-1989 data) and Rev. 8 (1990-2020 data).

Specifically, Table 6.6 shows historic and projected routine LLW volumes and radioactivity for BWRs and PWRs through 2020; Table 6.7 shows historic volume and radiological trends for the 10 plants in the study sample from 1985 to 1990. Estimates provided by both tables do not include the additional radiological waste generated for activities associated with license renewal. Table 6.8 depicts total generated solid LLW shipped for off-site disposal after compaction or other predisposal VR treatment. Declining disposal volumes in the plant sample generally reflect those of the industry as a whole, with a few exceptions. The exceptions are accounted for by waste-producing refurbishment activities such as steam generator replacements.

Data in Table 6.6 are provided by the Integrated Radioactive Waste Inventory database prepared for the U.S. Department of Energy (DOE) by Oak Ridge National Laboratory (DOE/RW-0006). Sources of data for this inventory include annual figures from the nuclear industry, trade organizations [e.g., Electric Power Research Institute (EPRI)], and a variety of scientific organizations. LLW volume figures provided by this integrated data, while exhibiting a consistent downward trend, are larger than those provided by the industry through the Institute for Nuclear Power Operations (INPO).

VR and waste minimization efforts have been undertaken by utilities in response to increased disposal costs for LLW. These efforts include segregation, decontamination, minimizing exposure of materials and tools to the contaminated environment, sorting potential contaminated materials, and dewatering and evaporation (Strauss 1987; Coley 1987; EPRI NP-5526 Vols. 1 and 2). Some of the most effective VR strategies are compacting, consolidating, and monitoring waste streams to reduce the volume of LLW requiring storage, as well as reducing the exposure of routine equipment to the reactor environment (Strauss 1987; Taylor 1987; EPRI NP-6163; EPRI NP-5526 Vols. 1 and 2; Shaw 1988). As shown in Tables 6.6 and 6.7, which pertain to wet and dry wastes, significant average VRs have been achieved for LLW shipped for disposal from nuclear power plants. According to EPRI, during the 1980s, BWRs achieved an average disposal VR of 24 percent. Between 1981 and 1985, there was a 50 percent reduction in dry waste, a 42 percent reduction in wet waste, and a 48 percent reduction in total waste volume from PWRs. In 1987, the median total LLW volumes shipped for disposal from BWRs and PWRs was 19,700 ft^3 (558 m^3) and 8800 ft^3 (250 m^3), respectively (EPRI NP-5526, Vols. 1 and 2).

According to 1993 performance indicators published by the INPO, the level of LLW per power plant unit has continued to decrease since the 1980s. During 1993, for example, the median value of the low-level lid radioactive waste per BWR unit was about 5,620 ft^3 (15 m^3) as compared to the industry median of 10,800 ft^3 (306 m^3) in 1988. Similarly, the median es for 1993 are below industry 1995 goals of 8,650 ft^3 (245 m^3) for BWRs and 3,880 ft^3 (110 m^3) for PWRs. Technological advances, as well as major reductions in the extent of contaminated areas within power plants, have contributed to the decrease in waste quantities generated over the past several years. Although volumes have declined, radioactivity levels have remained the same (INPO 1994).

Table 6.7 Solid low-level radioactive waste generated by 10 power plants: 1985-1990

Year	**1985**	**1986**	**1987**	**1988**	**1989**	**1990**
Pressurized-water reactor plant volume[a]						

Comanche Peak	NA[b]	NA	NA	NA	NA	0
D. C. Cook 1 and 2	8.28+02	5.28+02	4.63+02	2.46+02	3.88+02	1.95+02
H. B. Robinson	6.42+02	4.53+02	1.01+02	8.42+01	9.69+01	6.99+01
Indian Point 1 and 2	6.89+02	5.30+02	2.30+02	2.41+02	4.78+02	2.60+02
Indian Point 3	2.39+02	8.29+01	3.17+02	1.82+02	5.77+02	6.66+02
San Onofre 1	1.80+02	2.51+02	3.69+02	3.08+01	1.19+02	5.81+01
San Onofre 2 and 3	5.45+02	2.94+02	2.45+02	2.60+02	3.28+02	1.75+02
Surry 1 and 2	2.02+03	6.39+02	5.15+02	7.30+02	5.38+02	1.48+02
Pressurized-water reactor plant activity[c]						
Comanche Peak	NA	NA	NA	NA	NA	NA
D. C. Cook 1 and 2	2.00+03	1.59+03	2.30+03	5.58+02	1.17+03	1.44+02
H. B. Robinson	3.35+03	1.58+02	2.59+02	3.76+02	1.86+02	1.44+01
Indian Point 1 and 2	5.75+02	2.52+02	8.34+02	4.67+02	3.60+02	2.08+03
Indian Point 3	5.49+02	2.58+01	3.33+02	3.57+02	3.50+02	1.50+02
San Onofre 1	6.04+00	3.82+02	4.98+01	4.06+00	1.72+03	1.27+01
San Onofre 2 and 3	1.72+03	1.93+02	2.71+02	2.55+03	2.72+03	3.34+01
Surry 1 and 2	1.21+03	1.16+03	2.94+04	1.94+02	1.31+03	1.13+03
Boiling-water reactor plant volume[a]						
Hatch 1	2.04+03	1.35+03	7.78+02	8.36+02	8.53+02	1.38+03
Hatch 2	*d*	*d*	*d*	*d*	*d*	*d*
Vermont Yankee	5.43+02	3.10+02	2.23+02	1.73+02	4.84+00	0
Limerick	3.06+02	5.76+02	3.81+02	8.95+02	5.76+02	6.86+02
WNP-2[e]	4.02+02	3.02+02	3.75+02	4.70+02	3.64+02	3.34+02
Boiling-water reactor plant activity[c]						
Hatch 1	3.83+04	8.82+02	1.82+03	2.02+03	1.91+03	2.85+04
Hatch 2	*d*	*d*	*d*	*d*	*d*	*d*
Vermont Yankee	1.73+04	3.33+02	1.19+04	4.25+02	2.15+00	0
Limerick	2.06+01	7.53+02	2.15+03	9.70+02	3.40+04	1.24+03
WNP-2	2.96+02	5.07+02	1.09+03	1.01+03	1.10+03	1.29+03

[a]In exponential notation (m^3); 1 m^3 = approximately 35.3 ft^3.
[b]NA = not available; in most cases because the plant was not on line.
[c]In curies; 1 Ci = 37 x 10^9 becquerels.
[d]Included with Hatch 1 totals.
[e]WNP-2 = Washington Nuclear Project 2.

Source: NUREG/CR-2907.

Table 6.8 Percent of low-level radioactive waste treated by volume reduction methods in current use in the plant sample[a]

Plant	Waste compaction	Sorting before segregation	Decontamination	Shipment	Other
Comanche Peak		100			*b*
D. C. Cook	85	85	85	85	15[c]
Hatch	85-90			80-90	
Indian Point 2	30	55	50		15[d]

Indian Point 3	90		5	1	
Limerick	55		5	35	5[e]
Robinson		60-75	5	70	75[f]
San Onofre					
Surry	60	5	25	5	5[g]
Vermont	95	40	10	40	*h*
Yankee	55				45[j]
WNP-2[i]					
Sample average	50-51	31-36	17	29-30	15
Industry-wide average (*n*)[k]	46(49)	30(33)	15(41)	35(31)	42(44)

[a]In percent of waste volume treated. Because of multiple volume reduction methods, totals may not equal 100 percent.

[b]Comanche Peak color codes all hazardous and radioactive waste and does limited sorting prior to shipment. An off-site contractor performs incineration, compaction, and decontamination of tools.

[c]D. C. Cook dewaters 15 percent of its wet waste.

[d]Indian Point 2 employs sand blasting, steam cleaning, freon cleaning, and sectioning as well as direct burial of resins, filters, and sludges and is also examining plans for chemical decontamination of reactor coolant.

[e]Limerick incinerates contaminated oils and reagents.

[f]Robinson relies heavily on decontamination of material to the reactor environment and has seen steady improvements in use of this method.

[g]Surry employs an off-site vendor for incineration of waste oil and for supercompaction. The plant is completing an interim storage facility for storage of one year's LLW stream. This facility will employ asphalt solidification, high-pressure compaction, and decontamination of waste.

[h]Vermont Yankee employs a survey process for dry active waste that results in the sorting of high- and low-activity wastes and supercompaction of the former followed by off-site disposal. Irradiated reactor components are stored in the spent-fuel pool. High reliance on compaction has resulted from LLW being stored on site between 1989 and 1991 (Vermont has no available compact).

[i]WNP-2 = Washington Nuclear Project 2.

[j]WNP-2 dewaters spent resins.

[k](*n*) = number of plants responding to survey. In updating data for the Final GEIS, the sample plants were resurveyed and published updates were used. However, no new industry-wide survey was undertaken because neither published updates nor sample plant data showed significant departures from previous trends.

The 10 plants in the study sample illustrate current industry-wide VR practices, including ultra-high-pressure compaction of waste drums, incineration of waste oils and resins, mobile thin-film evaporation, waste crystallization, and asphalt solidification of resins and sludges. These are aided by formal establishment of VR goals, assignment of responsibilities to each plant division, special training, and monitoring of procedures (EPRI NP-3763; Riales 1985; Taylor 1987; EPRI NP-5526 Vols. 1 and 2; EPRI NP-5983; Shaw 1988). Some VR activities are performed on site; others are undertaken by off-site contractors. As shown in Table 6.8, the most common VR techniques used for plants in the study sample are compaction, waste segregation through use of radiation control zones and control points, and sorting of wastes into radioactive and nonradioactive batches prior to off-site shipment. The proportions of waste volumes treated by these techniques in the plant sample reflect those of the industry as a whole.

The efforts of three BWRs (WNP-2, Limerick, and Hatch) and two PWRs (Surry and Robinson 2) are representative of emerging VR trends, especially the growing reliance on off-site waste management vendors. VR techniques utilized by these plants typify the state of the art for the industry as a whole. Utilization of these VR methods will support NRC policy encouraging LLW volume reduction to alleviate concern for adequate LLW disposal capacity (46 FR 51100). WNP-2 has hired a radioactive-waste-processing service for segregation, compaction, and waste packaging (Macbeth

and Allen 1986). Limerick has hired a vendor to establish a plant database and surveillance program for radionuclide management (Trinoskey et al. 1987).

Following licensed operation, Surry adopted a filtration system in conjunction with demineralization and evaporation processes for liquid waste that are provided by an off-site vendor. Hatch employs a box compactor on site and uses an off-site vendor for supercompaction and incineration (EPRI TR-101160). Robinson relies principally upon segregation, sorting of waste before shipment, and source control to minimize plant areas devoted to LLW storage. In 1985, Robinson averaged 5200 ft^3 (150 m^3) of LLW storage area plant-wide. By 1986, this was reduced to 2300 ft^3 (65 m^3) through sorting, segregating, and retrieving usable nonradioactive wastes. Segregated refuse that emits less than 5 mrem/h is sent to a trash-monitoring facility. Trash that demonstrates an activity level less than 100 counts per minute above background is then sent to the plant landfill. The remainder is currently disposed of at Barnwell (EPRI NP-5934).

6.4.3.2 Interim LLW On-Site Storage

LLW is normally stored on site on an interim basis before being shipped off site for permanent disposal. On-site storage facilities are designed to minimize personnel exposures. High-dose-rate LLW is isolated in a shielded storage area and is easily retrievable. The lower-dose-rate LLW is stacked or stored to maximize packing efficiencies. NRC requirements and guidelines ensure that LLW is stored in facilities that are designed and operated properly and that public health and safety and the environment are adequately protected (EPRI NP-7386). NRC requirements and guidelines include the following:

- The amount of material allowed in a storage facility and the shielding used should be controlled by dose rate criteria for both the site boundary and any adjacent off-site areas. Direct radiation and effluent limits are restricted by 10 CFR Part 20 and 40 CFR Part 190. The exposure limits given in 10 CFR 20.1301 apply to unrestricted areas.
- Containers and their waste forms should be compatible to prevent significant corrosion within the container. After a period of storage, the subsequent transportation and disposal should not cause a container breach.
- Gases generated from organic materials in waste packages should be evaluated periodically with respect to container breech. After a period of storage, the subsequent transportation and disposal should not cause a container breach.
- Gases generated from organic materials in waste packages should be evaluated periodically with respect to container breech. High-activity resins should not be stored more than 1 year unless they are in containers with special vents.
- A program of at least quarterly visual inspection should be established.
- A liquid drainage collection and monitoring system should be in place. Routing of the drain should be to a radwaste processing system (EPRI NP-7386).

NRC has historically discouraged the use of on-site storage as a substitute for permanent disposal. NRC Generic Letter 81-38 (NRC 1981) states that no facility should be built to store waste for longer than 5 years under a licensee's 10 CFR 50.59 evaluation. Specific NRC approval should be obtained. This limitation was based in part on safety considerations but was aimed at encouraging the development of permanent LLW disposal facilities. However, recognizing that the 5-year limit has not influenced the development of new waste disposal facilities and that the states continue to make slow progress, NRC has eliminated in its guidance any language that the 5-year term is a limit beyond which storage would not be allowed.

Regarding nuclear power reactors, the 5-year limit is associated with the need to obtain a separate Part 30 license to store LLW. Generic Letter 81-38 states that under certain conditions, Part 50 licensees should obtain a Part 30 materials license to store LLW. These conditions are that (1) there exists an unreviewed safety question with the proposed storage facility, (2) the existing license conditions or technical specifications prohibit increased storage, or (3) the planned storage time exceeds 5 years. Other than for the conditions noted, NRC regulations and procedures do not call for a separate Part 30 license for power reactors for LLW storage, because power reactor licensees are already

authorized under Part 30 to possess by-product materials produced by the operation of the facility within the limits of their operating license.

Generic Letter 81-38 states that the application for a Part 30 license is for the administrative convenience of the Commission and is not intended to be substantively different from an application for amendment of the facility operating license (i.e., the Part 50 license). Because Part 50 licensees are already authorized under Part 30 to possess their LLW, NRC staff revised the guidance to state that these licensees should amend their Part 50 licenses when the storage of LLW is not within the limits of their current operating license. On February 1, 1994, the Commission, in responding to SECY-93-323, which recommended withdrawal of the on-site storage rulemaking, directed the staff to eliminate the requirement for power reactor licensees to obtain a separate Part 30 license (SECY-94-198). Agreement states are currently reviewing proposed changes to existing guidance.

Several events have increased the trend towards longer on-site storage. These events include the closure of the Beatty, Nevada, site in 1992; the restriction of the Richland, Washington, facility to Northwest Compact and Rocky Mountain Compact states and the restriction of the Barnwell, South Carolina, site to waste generated by Southeast Compact states. As of July 1994, 33 states were without access to licensed full-service disposal facilities. The status of state efforts to form compacts and identify new disposal sites is discussed in Section 6.4.3.3. However, as of July 1, 1995, all states except North Carolina have access to the Barnwell site. The Envirocare site in Utah takes limited types of waste from certain generators.

Most utilities have adequate on-site space for at least the near term, and many facilities are already in place (de Planque 1994). For example, the Cook nuclear plant in Michigan has built an on-site disposal facility (completed in 1992) that will not reach capacity until about 2003. Moreover, the facility is designed so that it can be easily expanded to double its storage capacity after that date (McRae 1994). Vermont Yankee has stored LLW on site since 1989, when it was denied access to off-site disposal space. Vermont is not a member of a compact, nor does it have official "unaffiliated state" status. However, pending Congressional approval, Vermont will become a member of the Texas Compact. Vermont Yankee has one of the smallest plant sites in the study sample [125 acres (50.6 ha)]. Typically, for on-site storage of LLW or spent fuel, a few tenths of an acre are disturbed and occupied by the storage facilities themselves. In addition, a few acres are maintained as exclusion areas surrounding the facilities.

Indian Point is planning to store routine LLW on site if use of an out-of-state disposal facility is denied to New York State after 1994 and if New York fails to establish its own repository. Current (1994) plans are to store LLW for up to 5 years in a qualified interim facility. For two operating units and a 239-acre (96.7-ha) site, such a facility would probably utilize no more than 1 to 2 acres (0.4 to 0.8 ha), or 0.8 percent of the site. Surry is completing an interim facility that will be able to store packaged LLW for up to 1 year. It will employ asphalt solidification, high-pressure compaction, and decontamination to reduce the volume of LLW requiring storage until a new Southeast Compact disposal facility becomes available. Limerick can store LLW for 5 years after closure of the plant site (a contingency undertaken in contemplation of decommissioning). It is investigating the possibility of shipping LLW to two other plants owned by Philadelphia Electric Company. One of these facilities has a 5-year storage capacity, and the other can store 3 months' volume. No plant has had to acquire additional land for interim waste storage.

The environmental impacts of on-site LLW management activities, including interim storage, result principally from exposure to radioactivity. Workers receive external doses from exposure to radiation while handling and packaging the waste materials and from periodic inspections of the packaged materials and any other handling operations required during interim storage. Such doses, however, account for a small fraction of the total radiation dose commitment to workers and, as discussed in Section 4.6.3, the total dose commitment is well within regulatory limits. Radiation doses to off-site individuals and biota from interim LLW storage are insignificant. The principal exposure pathway is direct radiation from steam generator assemblies and other large assemblies stored in shielded buildings, but this pathway results in a very small dose commitment (Section 3.8.1.6).

6.4.3.3 LLW Disposal

In 1992 approximately 35 percent of LLW disposed of in the United States was generated by nuclear power plants (DOE/LLW-181) although, as noted earlier, percentages vary and have been closer to 50 percent. Compacted dry waste is the largest single form of LLW disposed of from nuclear power plants, accounting for approximately 46 and 36 percent of total average annual volumes from PWRs and BWRs, respectively (EPRI NP-5526, Vols. 1 and 2; Shaw 1988). Through 1994, the two remaining commercial disposal sites--Barnwell, South Carolina, and Hanford, Washington--acquired a total LLW volume of 39,576 ft^3 (1,121 m^3) (Radioactive Exchange 1994).

The NRC emphasizes an integrated-systems approach to LLW disposal, including consideration of site selection, site design and operation, waste form, and disposal facility closure (10 CFR 61). NRC specifies requirements that must be met by the waste generator, including requirements for waste form and content, waste classification, and waste manifests. The NRC's approach emphasizes passive rather than active systems to minimize and retard releases to the environment over the extremely long periods of time contemplated for the control of radioactive material. The performance objectives given in 10 CFR 61 assume no active controls at the disposal site after 100 years and, further, depending on the waste classification, site stability for up to 300-500 years. The site itself, including subsurface zones, is considered to be part of the containment mechanism, which by design (e.g., clay liners and covers or engineered surface barriers) slows the expected release of acceptably small quantities of radioactivity (NUREG-0945).

Waste disposal facilities sited and operated consistent with 10 CFR 61 and other appropriate regulations would result in minimal environmental impact. Licensing of these facilities requires environmental documentation, including assessment of potential environmental impacts. Procedures are established to ensure that performance objectives are met. Waste generators must meet the waste acceptance criteria established for the facility and adhere to packaging requirements.

With the passage of Pub. L. 96-573 in 1980, the Low-Level Radioactive Waste Policy Act, states were assigned responsibility for the disposal of certain LLW generated within their borders (except for LLW generated by the federal government). This act was amended by the Low-Level Radioactive Waste Policy Amendments Act of 1985 (Pub. L. 99 -240), which mandated that from January 1, 1986 through December 1992, states were to divide their volume allocations among waste generators. Volume allocations for the 10 plants in the study sample are depicted in Table 6.9. Volumes due to unusual activities ("unusual volumes") denote a special disposition allocation reserved for refurbishment, decommissioning, and core-related accident waste. As of December 31, 1992, DOE had granted six requests for unusual volume allocation, totaling 190,283 ft^3 (5,388 m^3); two of the six requests were returned to the requestor for additional information and no requests were denied. D. C. Cook, Unit 2, which requested an additional 46,538 ft^3 (1,318 m^3), was the largest of the six requests. A balance of 609,717 ft^3 17,265 m^3) of the original 800,000 ft^3 (22,653 m^3) of unusual volume allocation remains undistributed. No petitions for unusual volume allocations were submitted to the DOE in 1992.

Table 6.9 Profile of allocation of low-level radioactive waste for 10 power plant sites: current and projected allocations[a]

Plant	Compact or unaffiliated state	Unusual volumes[a] (ft^3/year)[b]	Total allocation volume (ft^3/year)	Volume received at disposal[c] used (ft^3/year)	Percentage of allocation used 1986-1992
Comanche Peak	Texas	0	12,330	7,746	63
D. C. Cook 1 and 2	Midwest	46,538	179,474	64,437	36
Hatch 1 and 2	Southeast	0	371,352	237,532	64
Indian Point 1 and 2	New York	0	132,936	71,313	54
Indian Point 3	New York	0	66,468	24,672	37
Limerick 1	Appalachian	0	82,920	137,265	81
Robinson 2	Southeast	0	165,840	32,885	40

Surry 1 and 2	Southeast	0	199,404	89,184	54
San Onofre 1, 2, and 3	Southeast	0	148,836	86,407	43
Vermont Yankee	Vermont	0	148,836	48,546	33
WNP-2[d]	Northwest	0	185,676	94,196	51

[a]Volumes due to unusual activities (e.g., steam generator replacement).
[b]1 ft^3 = 0.028317 m^3.
[c]To Barnwell, South Carolina; Beatty, Nevada; and Hanford, Washington.
[d]WNP-2 = Washington Nuclear Project 2. *Source*: DOE/EM-0143P.

Between 1986 and 1992, all plants in the study sample stayed within allocated ceilings, averaging 51-percent utilization of disposal capacity. The plant that came closest to exceeding its allocated ceiling was Limerick, which used 81 percent of its volume allocation by 1992. Nuclear power plants have generally shipped far less LLW for disposal than had been anticipated under Pub. L. 99-240. Even those few reactors that received unusual volume allocations could have disposed of the waste generated by the unusual activities using only their regular allocations specified under the law. From 1986 through 1992, commercial power reactors used only 49.5 percent of the total regular allocations issued through 1992 (DOE/EM-0143P). While historical patterns of disposal provide no guarantees regarding future disposal, the fact that these ceilings remained intact suggests that compact planners will design new disposal facilities that can accommodate a wide range of disposal scenarios.

Pub. L. 99-240 also provides milestones, incentives, and penalties to promote the states' continuous progress toward new LLW disposal facility development. States must ensure their own disposal capacities by forming waste compacts or siting their own disposal facilities. Table 6.10 identifies current and future host states for LLW disposal facilities.

Figure 6.1 shows the geographic arrangement of current compacts and their respective state members. Also shown in Fig. 6.1, incremental progress is being made in forming enduring compacts and siting new LLW disposal facilities. Recent examples of progress include the formation of a new Texas Compact that includes Maine and Vermont, which is pending before the U.S. Congress for consent. Also, the Southeast Compact has selected a new site in North Carolina that is expected to be operational by mid-1998. Moreover, the process of site selection is progressing in the Appalachian, Central, and Midwest compacts. Facilities in the host states of Connecticut, Illinois, Massachusetts, Nebraska, New Jersey, Pennsylvania, and New York are scheduled for operation in the period 1999 to 2002. In addition, site activity in the host state of Ohio can begin when the Ohio General Assembly enacts enabling legislation. Michigan, New Hampshire, Rhode Island, District of Columbia, and Puerto Rico are unaffiliated states and have no plans to develop an LLW-disposal facility. They may be able to fulfill their responsibilities through the contracting and/or compact process. Envirocare, in Utah, takes limited types of LLW from certain generators. Despite evidence of incremental progress in siting new facilities, the lack of access of 33 states to LLW disposal sites until Barnwell became available to all states except North Carolina on July 1, 1995 shows the potential to affect all classes of waste generators, including nuclear power plants. Specifically, about 50 percent of the nation's LLW was expected to require on-site storage after 1994, much of it at the point of generation (DOE/EM-0143P).

6.4.4 Effects of License Renewal on LLW

Additional quantities of LLW will result from refurbishment and extended power plant operations under renewed licenses. These activities could, in turn, require the development of additional on-site storage facilities for LLW, including GTCC waste, especially if the power plant is located in a compact or unaffiliated state that has not developed adequate disposal facilities.

6.4.4.1 Generation

Table 6.11 shows that the annual incremental increase in LLW generation for BWRs would be approximately 6163 ft^3 (175 m^3) during the 10-year refurbishment period (assuming four current-term refurbishment outages and one major

refurbishment outage; see Section 2.4 for refurbishment scenario). For PWRs, the average incremental increase in LLW generation would be approximately 8410 ft^3 (238 m^3).

Table 6.10 Actual and estimated dates for completing steps in facility development (estimated dates obtained from compacts/states), April 1995

Compact/host state	Select site	Submit license application	Operate facility
Appalachian/Pennsylvania	1995	Early 1997	Mid-1999
Central/Nebraska	Dec. 1989	July 1990	Fall 1999
Central Midwest/Illinois	Unscheduled	Nov. 1997	July 2000
Midwest/Ohio	Unscheduled	Unscheduled	Unscheduled
Northeast/Connecticut	Unscheduled	1999	2002
New Jersey	Unscheduled	Jan. 1998	July 2000
Southeast/North Carolina	Dec. 1993	Dec. 1993	Mid-1998
Southeast/California	Mar. 1988	Dec. 1989	Mid-1997
Unaffiliated States			
Maine[a]			
Massachusetts	Unscheduled	Feb. 1998	2000/2001
Michigan	Unscheduled	Unscheduled	Unscheduled
New York	Unscheduled	June 1999	Nov. 2001
Texas	Aug. 1991	Mar. 1992	Mid-1997
Vermont[a]			
District of Columbia, New Hampshire, Rhode Island, Puerto Rico[b]			

[a]Formation of a compact pending with Texas as the host state.
[b]Currently not planning to develop a low-level radioactive waste disposal facility.

Fig. 6.1. Low-level radioactive waste compact status.

Table 6.11 Total estimated incremental[a] low-level radioactive waste generation during 10-year renewal refurbishment activities and 20-year post-refurbishment operations (ft^3),[b] as shipped

Activity	Boiling-water reactor	Pressurized water reactor
LLW attributable to refurbishments prior to year 41		
Current-term refurbishment outages (4)[c]	8,2000 x 4 = 32,880	9,340 x 4 = 37,360
Major refurbishment outage (1)	28,750	46,740
LLW attributable to plant life extension period (41-60 years)		
Refueling outages (8)	160 x 8 = 1,280	116 x 8 = 928
5-year in-service inspections (2)	731 x 2 = 1,462	466 x 2 = 932
10-year in-service inspection (1)	1,348	1,035
Total LLW	66,000	87,000

[a]Incremental wastes are those in addition to baseline annual for routine operations for the 20 years.
[b]1 ft^3 = 0.028317 m^3.
[c]Number in parentheses is the number of times the activity is performed.

Source: SEA 93-461-10-A:3.

The considerably greater volume of refurbishment-associated LLW in the latter case is largely caused by the potential need for steam-generator replacements in PWRs. For the 20 years of operation after refurbishment, annual average

LLW generation rates from the eight refueling outages and three in-service inspections would increase approximately 205 ft^3 (5.8 m^3) for BWRs and 145 ft^3 (4.1 m^3) for PWRs (Table 6.6). These conservative-case estimates include waste from refueling operations and represent about 4 percent of the median waste volume generated by BWRs during 1993 and about 9 percent ofthe median value of LLW produced by PWRs during 1993. The total projected increases in LLW generation [66,000 ft^3 (1,870 m^3) for BWRs and 87,000 ft^3 (2,460 m^3) for PWRs] amount to a volume of about 3 percent of the total nuclear power plant waste allocation volume used from 1983 through 1992. Although this scenario assumes distinct LLW streams related to license renewal refurbishments, in fact refurbishments will probably occur as a continuation of normal operations under the original license. Consequently, it will be difficult to distinguish LLW generated by continuing operations (including waste from steam generator replacement) from waste streams related to license renewal. Also, continued progress in VR should slow the accumulation of waste volumes either on site or at a permanent waste disposal facility. Although utilities would rely on the same VR techniques used under original licenses during license renewal (Table 6.12), plants in the study sample anticipate less reliance on waste compaction for VR, because the greatest VR gains from this method have already been achieved. Utilities expect to rely increasingly on incineration, resin drying (dewatering), and off-site contracting for the disposal of large contaminated components through a variety of methods (Efremenkov 1989; DOE/RW-0220).

Certain activities may also produce increased volumes of GTCC waste as a result of removing neutron-activated materials from the reactor vessel or removing materials that are located sufficiently close to the reactor core such that activation results (SEA 93-461-10-A:3). The current inventory of GTCC waste from nuclear utilities consists of a small volume of startup sources, stellate bearings, and other wastes that are being stored at utility sites until a disposal option is available. These wastes bring the total inventory of GTCC waste from nuclear utilities to 364 ft^3 (10.3 m^3). The activity of the current inventory is estimated to be 3,873,000 Ci (DOE/LLW-114).It is difficult to predict amounts of GTCC waste likely to be produced by refurbishment activities without knowing if reactor core components have to be removed and the extent of irradiation-induced activity. The current conservative estimate is that about 1540 ft^3 (44 m^3) of refurbishment-associated GTCC waste will be generated by BWRs and about 500 ft^3 (14 ;m^3) of GTCC waste will be generated by PWRs (SEA 93-461-10-A:3).

Table 6.12 Percent of anticipated low-level waste volumes that will be treated by five types of volume-reduction methods during license renewal for the sample plants[a]

Plant	Waste compaction	Sorted before segregation	Decontamination	Shipment	Other
Comanche Peak		100			
D. C. Cook	85	85	85	85	85
Hatch	85-90			80-90	
Indian Point 2	30	55	50		15 [b]
Indian Point 3	90				20 [c]
Limerick	20		5	35	40 [d]
Robinson		>75	1-5	<70	75 [e]
San Onofre					
Surry	35	5	25	5	30 [f]
Vermont Yankee	95	40	10	40	
WNP-2[g]	25		5	25	45 [h]
Sample average	42-43	33	16-17	31-32	28
Industry-wide average (n)[i]	34(50)	32(35)	19(41)	42(30)	50(43)

[a]In percent of waste volume treated. Because of multiple volume-reduction methods, totals may not add up to 100 percent.

[b]Under license renewal, Indian Point 2 anticipates moving toward greater waste incineration because of increasing volume-reduction costs and uncertainties surrounding availability of a New York state disposal facility. It can keep low -level waste on site in a qualified interim facility.

[c]Indian Point 3 plans to employ a combination of resin drying, incineration of dry active waste, and metals smelting off site during license renewal.

[d]Limerick will move increasingly toward incineration. It will be able to store up to 5 years of low-level waste on site after closure of site.

[e]Robinson will place a greater emphasis on minimizing contamination during license renewal.

[f]Surry will move toward more incineration.

[g]WNP-2 = Washington Nuclear Project 2.

[h]WNP-2 will move toward increasing dewatering of resins. It also anticipates contracting for the disposal of large turbine components and moisture separator reheaters during refurbishment, as well as constructing interim refurbishment-waste warehouse space.

[i]*n* = number of plants responding to survey. In updating data for the Final GEIS, the sample plants were resurveyed and published updates were used. However, no new industry-wide survey was undertaken because neither published updates nor sample plant data showed significant departures from previous trends.

The Low-Level Radioactive Waste Policy Amendments Act of 1985 assigned the responsibility for disposal of GTCC LLW to DOE. Disposal by DOE must be in a facility licensed by NRC; however, states may allow disposal of GTCC waste at LLW sites. NRC's current LLW regulations (10 CFR 61.55) require disposal of GTCC waste by DOE in a geologic repository as defined in 10 CFR Part 60, unless a specific alternative is approved by the Commission. The combined impacts of all waste buried at the repository will be required to meet the applicable standards.

Both the activity and volume of GTCC waste is small when compared to spent fuel. DOE estimates of GTCC waste to be generated through the year 2055 are on the order of 2000 m^3 containing about 90 million curies (DOE/LLW-114). Utility wastes contribute about 66 percent of the volume and 90 percent of the activity of the GTCC waste; the predominant waste form is activated metal components. The volume estimates vary, depending on factors such as assumed packaging, averaging methods, and nonfuel components that may be determined to be covered by HLW contracts; a range of 1000-8700 m^3 is possible for total GTCC waste generation through 2055 (DOE/LLW-114). These volumes and activities can be compared to commercial spent-fuel inventories as of December 31, 1992 of about 10,000 m^3 (just the fuel rods and space between, no packaging) and 26,000 million curies and projections of about 34,000-41,000 m^3 and 25,000-52,000 million curies in the year 2030 (DOE/RW-0006). Spring of 1995 DOE mates for the Yucca Mountain repository are 147,000 m^3 of waste, a peak activity of 43,000 million curies, and an excavated volume of 4-6 million/m^3. Based on the data in Section B.4.1.2 of Appendix B to this GEIS and assuming 72 PWRs and 37 BWRs, the total volumes of GTCC that would result from renewal activities and plant life extension from all 109 plants would be 2,044 m^3 for the typical case and 2,636 for the conservative case. These volumes appear to be consistent with the other estimates.

The staff also notes that in the 1989 rulemaking to require disposal of GTCC in a deep repository unless disposal elsewhere has been approved by the Commission (54 FR 22578; May 25, 1989), the Commission stated:

The fact that the expected volume of GTCC waste is very low was an important factor in the Commission's decision to propose the Part 61 amendments. Current evidence shows that the expected volume of GTCC waste is very small relative to volumes of HLW and Class A, B, and C LLW. It is projected that 2000-4800 cubic meters of commercially-generated GTCC waste will need disposal through the year 2030 [U.S. Department of Energy estimates]. This amount of waste is smaller than the anticipated excavated volume of a single emplacement room of a repository, and would not present a significant burden on the capacity of the repository to receive HLW. It would not be a significant factor underlying the need for a second repository.

Based on the Waste Confidence finding reflected in 10 CFR 51.23 concerning the safety and availability of a HLW repository, the Commission has previously determined that there is reasonable assurance at least one geologic HLW repository will be available within the first quarter of the twenty-first century, and that sufficient repository capacity will be available within 30 years beyond the licensed life of operation of any reactor. Although the Waste Confidence finding did not expressly encompass GTCC waste, the staff concludes that the Waste Confidence reasoning and information on repository availability, together with relatively small incremental volume and hazard associated with GTCC waste, support a finding that there is reasonable assurance that sufficient GTCC LLW disposal capacity will be made available when needed for facilities to be decommissioned consistent with NRC decommissioning requirements. Off-site disposal capacity for these wastes can reasonably be expected to be available when the HLW repository begins operating.

6.4.4.2 Interim LLW Storage

If compact and unaffiliated states are able to site disposal facilities and accept waste in normal increments (i.e., in accordance with the assigned allocations for each plant in the compact or unaffiliated state), there should be no significant issues or environmental impacts associated with interim storage of LLW generated by nuclear power plants with renewed licenses. Interim storage facilities would be utilized until these wastes could be safely shipped to licensed disposal facilities (EPRI NP-6163). While on-site land will be needed to store the waste, measures taken by the industry appear to be adequate to encompass these additional volumes. For example, Indian Point 2, Limerick, Robinson, and WNP-2 are contemplating construction of additional interim storage facilities associated with license renewal. Indian Point expects to store resin and filter wastes after dewatering in a special Butler-style building. A separate facility may be required for storage of Indian Point 3's old steam generators. Limerick's additional 165,000-ft^2 (15,300-m^2) facility for spent fuel and LLW, to be completed by 1999, will be used for refurbishment-associated wastes. WNP-2 is planning to construct a special warehouse for storage of its low-pressure turbines. The incremental volumes of LLW requiring interim on-site storage would result in increased worker exposure and external radiation dose commitments from waste handling, packaging, and inspection activities. However, such incremental dose commitments would be small and pose a low risk (Section 4.6.3.2).

If off-site disposal facilities are unavailable to accept waste in normal increments, then on-site interim storage may have to take place longer than the 5-year time frame once envisioned by NRC, and additional on-site storage capacity may be needed. As discussed in more detail in Section 6.4.4.6, the radiological implications of storing larger quantities of LLW on site for relatively longer periods of time would be minimal. The external dose commitments to workers would increase slightly because of periodic inspections of the waste and perhaps some handling, but this incremental dose would not be significant. Emergency response capabilities already in place would be adequate for any additional LLW storage capacity that may be required.

6.4.4.3 LLW Disposal

During the 20-year period for which the renewed licenses are granted, most utilities may have uncertain access to currently operating disposal facilities. Beatty closed in 1992, and Barnwell was closed to noncompact facilities in June 1994 but made available again in July 1995. The Hanford disposal site is limited to the Pacific Northwest and Rocky Mountain compact states. The additional quantities of LLW resulting from refurbishment and extended power plant operations under renewed licenses will be stored on site or shipped to existing or future disposal facilities.

Three issues associated with off-site disposal may be faced by LLW compacts, compact host-site disposal states, and unaffiliated states during license renewal. First, although routine waste stream volumes continue to decline as VR measures are implemented, major refurbishments that occur during license renewal could produce additional short-term volumes that could tax available off-site disposal space in some compact and unaffiliated states. Although unlikely, refurbishments for some nuclear power plants could be concentrated in a 1-year period before license expiration, thereby exceeding the waste volume acceptance criteria established by the host state.

Most compacts, however, are expected to develop facility design specifications that can encompass multiple, simultaneous refurbishment activities. For example, the Southeast Compact assumes an initial licensing volume of 11 million ft^3 (311,500 m^3) that will be disposed of in its North Carolina site scheduled to be operational in mid-1998. Current Southeast Compact policy limits the annual volume of waste to be received at this facility to 1.6 million ft^3 (45,300 m^3) per year for all categories of waste generators.

Assuming that a major refurbishment (involving the replacement of a steam generator) would generate about 45,000 ft^3 (1,275 m^3) of LLW and that annual regional waste disposal volumes would average 350,000 ft^3 (9,900 m^3) for all categories of generators, it would major refurbishments to reach the 1.6 million ft^3 (45,300 m^3) annual ceiling for the Southeast Compact. Because it is unlikely that this many refurbishments will take place in any one year, disposal capacity problems are not likely to surface (data for scenario provided by D. G. Ebenhack Clean-Nuclear Systems, Inc., in letter to J. MacMillan, North Carolina Low-Level Radioactive Waste Management Authority, July 21, 1993; SCCLLRWM 1994). In situations where there is the likelihood that the specified annual compact waste acceptance ceilings will be reached, refurbishment could be staggered over several years. The expected waste from refurbishment is significantly less than the waste ated by decommissioning, which ranges from 650,000 ft^3 (18,400 m^3) for a PWR to 672,000 ft^3 (19,000 m^3) for a BWR (SCCTAC 1994). If 12 nuclear units in the Southeast Compact are decommissioned between 2009 and 2017, approximately 7,800,000 to 8,064,000 ft^3 (220,900 to 228,300 m^3) of LLW would be generated. This amount of waste can still be accommodated within the maximum e of a facility with a capacity of 32 million ft^3 (906,000 m^3), depending on the future volumes of LLW produced by other categories of generators.

Second, some host states have advised waste generators that they will be responsible for their own interim storage until disposal facilities can be opened; and those facilities may not open until *some* current licenses[1] have expired. However, for most nuclear power plants, new LLW disposal facilities are scheduled to open well before the expiration date for current licenses. An analysis of the expiration dates of nuclear power plant licenses and the expected dates for new LLW waste facilities to be available[2] reveals that existing power plant licenses will expire, on average, about 19 years after planned LLW facilities are currently scheduled to begin operations. Nevertheless, any nuclear power plant can start the license renewal process after 20 years of operation; consequently, the flexibility afforded by the 19-year cushion may be more apparent than real.

Third, an agreement state under the Low-Level Radioactive Waste Policy Amendments Act of 1985 may use averaging criteria that are different from those of the NRC to determine if a particular container of LLW is class C or GTCC wastes. Waste exceeding class C limits may be unacceptable for disposal in a licensed facility (Hutchison and Magleby 1990; Newberry and Coleman 1990). If a particular host state classifies waste as GTCC, it may refuse to accept that waste for disposal. This would increase the volume of GTCC that must be stored on-site by nuclear power plant operators until DOE provides disposal capacity at an HLW repository or other licensed facility.

The environmental impacts associated with LLW disposal during the terms of a renewed license of nuclear power plants should not be different in kind or magnitude from that during the terms of the initial 40-year license. The disposal facilities would be licensed and in compliance with appropriate regulations (10 CFR 61). The waste generators would have to meet the packaging and waste acceptance criteria for the specific disposal facility. Thus, measures would be in place to ensure that the performance objectives for the facility are met and that public exposures will be within regulatory limits.

6.4.4.4 Regulations Applicable

10 CFR Parts 20, 60, 61, and 62. 10 CFR 50.59.

6.4.4.5 Impacts of Extended On-Site Storage of LLW

6.4.4.5.1 Introduction

Preceding sections have discussed LLW from refurbishment and continued operations and presented the more likely events and impacts. The earlier discussion indicated that LLW treatment and disposal capacity are expected to become available before or during the license renewal period, although delayed from the Congressional timetables in the LLW statutes. This additional section separately addresses the more unlikely scenario of on-site storage of both refurbishment and operational low-level radioactive wastes (LLW) for the renewal period of approximately 20 years. Summary data are provided and radiological and nonradiological impacts are addressed. Radiological impacts to members of the public and workers are considered.

First, the nature of the problem is reviewed. As discussed in Chapter 3 and Appendix B, the refurbishment of the plants will produce additional LLW. For the typical case, increased "as-shipped" volumes for a BWR are estimated to be 220 m^3/year, and for a PWR 170 m^3 (Table B.4 of Appendix B). For the conservative case, higher volumes are estimated because of more extensive refurbishment. Major refurbishment activities are replacement of recirculating piping at BWRs and steam generator replacement for a PWR. The conservative case estimate for refurbishment waste is 1900 m^3 for a BWR and 2500 m^3 for a PWR. The analysis of refurbishing impacts included preparing wastes for shipment during the outages (e.g., see B.3.2.3 of Appendix B) but did not include inspection and any additional treatment or repackaging activities that might occur with extended on-site storage; however, on-site storage of steam generators was assumed and analyzed. Annual operating LLW that would be generated during the license renewal term is estimated to be about the same as current levels: 560 m^3 for BWRs and 250 m^3 for PWRs for the typical case (see Section 2.6.3.2) and for the conservative case, 11 percent higher volumes for BWRs and 30 percent higher for PWRs (see Section 2.6.4.2). For the typical case, the maximum stored volumes for the license renewal period, assuming no off -site capacity becomes available, would be about 20 times the annual value, or 11,200 m^3 for BWRs and 5,000 m^3 for PWRs. As Table 6.6 shows, based on historical data and DOE projections, the accumulated activities should remain about constant when decay is taken into account.

Extended storage is covered by the existing regulatory framework. Long-term storage of LLW at reactor sites has become necessary because of the slow pace of development of new off-site disposal facilities. In addition, utilities have opted for on-site storage for economic or other reasons. Utilities also store LLW that has been shipped off site for treatment (e.g., compaction, incineration) at commercial treatment facilities and returned for extended storage. Before licensees can build new storage facilities or make changes to the design or operation of the facility as described in the Safety Analysis Report (SAR), they must perform written safety evaluations under 10 CFR 50.59. This requirement applies to activities related to LLW, including long-term storage of LLW and mixed LLW. Under 10 CFR 50.59, licensees are allowed to make changes to their facility without permission of the NRC if the evaluation indicates that a change in the technical specifications is not required or that an unreviewed safety question does not exist. Licensees would have to ensure that the new LLW activities would not represent an unreviewed safety concern for routine operations or because of potential accidents. Both on-site and off-site impacts would have to be considered. If the LLW or mixed-LLW activity fails either of these tests, a license amendment is required. Thus, extended storage would be evaluated by the licensee, subject to inspection by NRC, or approved by NRC. Both licensee and NRC evaluations would include evaluation of anticipated compliance with applicable standards and requirements.

6.4.4.5.2 LLW Off-Site Radiological Impacts to Members of the Public

The storage of LLW is subject to several regulatory requirements related to potential public exposures. An overview of the regulatory requirements is given in Sections 3.8.1.1 and 6.2.2.5 and in Appendix E, but is repeated here. The basic provisions of 10 CFR Part 20 apply to all activities at the site. Part 20 contains both occupational and public dose limits, requirements for radiation safety programs that keep occupational and public doses and releases ALARA, survey and monitoring requirements, and reporting and record-keeping requirements. Part 20 also incorporates 40 CFR 190 [10 CFR 20.1301(d)], the EPA's general environmental standards for the uranium fuel cycle. NRC implements and enforces the limits in 40 CFR 190, which cover storage of LLW at the reactor site. The standards in 40 CFR 190 apply to the combined impacts from all uranium fuel cycle facilities and are expressed as annual dose limits for individual members of the public and annual quantity limits on certain radionuclides.[3] Therefore, any LLW activities should not result in doses and releases that would result in the site's failing to meet Part 190. Licensees are further limited by

technical specifications to ensure compliance with the design objectives in Appendix I to 10 CFR Part 50. Appendix I design objectives are fractions of the limits in 10 CFR Part 20 and 40 CFR Part 190 and the dose range for doses to the whole body and organs is from 3 to 20 mrem/year. The numerical objectives in Section II of Appendix I state that:

A. The calculated annual total quantity of all radioactive material above background [Footnote text: Here and elsewhere in this appendix background means radioactive materials in the environment and in the effluents from light-water-cooled power reactors not generated in, or attributable to, the reactors of which specific account is required in determining design objectives]. to be released from each light-water-cooled nuclear power reactor to unrestricted areas will not result in an estimated annual dose or dose commitment from liquid effluents for any individual in an unrestricted area from all pathways of exposure in excess of 3 millirems to the total body or 10 millirems to any organ.

B.1. The calculated annual total quantity of all radioactive material above background to be released from each light-water-cooled nuclear power reactor to the atmosphere will not result in an estimated annual air dose from gaseous effluents at any location near ground level which could be occupied by individuals in unrestricted areas in excess of 10 millirads for gamma radiation or 20 millirads for beta radiation.

2. Notwithstanding the guidance of paragraph B.1.

(a) The Commission may specify, as guidance on design objectives, a lower quantity of radioactive material above background to be released to the atmosphere if it appears that the use of the design objectives in paragraph B.1 is likely to result in an estimated annual external dose from gaseous effluents to any individual in an unrestricted area in excess of 5 millirems to the total body; and

(b) Design objectives based upon a higher quantity of radioactive material above background to be released to the atmosphere than the quantity specified in paragraph B.1. will be deemed to meet the requirements for keeping levels of radioactive material in gaseous effluents as low as in reasonably achievable if the applicant provides reasonable assurance that the proposed higher quantity will not result in an estimated annual external dose from gaseous effluents to any individual in unrestricted areas in excess of 5 millirems to the total body or 15 millirems to the skin.

C. The calculated annual total quantity of all radioactive iodine and radioactive material in particulate form above background to be released from each light-water-cooled nuclear power reactor in effluents to the atmosphere will not result in an estimated annual dose or dose commitment from such radioactive iodine and radioactive material in particulate form for any individual in an unrestricted area from all pathways of exposure in excess of 15 millirems to any organ.

D. In addition to the provisions of paragraphs A, B, and C above, the applicant shall include in the radwaste system all items of reasonably demonstrated technology that, when added to the system sequentially and in order of diminishing cost-benefit return, can for a favorable cost-benefit ratio effect reductions in dose to the population reasonably expected to be within 50 miles of the reactor. As an interim measure and until establishment and adoption of better values (or other appropriate criteria), the values $1000 per total body man-rem and $1000 per man-thyroid-rem (or such lesser values as may be demonstrated to be suitable in a particular case) shall be used in this cost-benefit analysis.

The requirements of this paragraph D need not be complied with by persons who have filed applications for construction permits which were docketed on or after January 2, 1971, and prior to June 4, 1976, if the radwaste systems and equipment described in the preliminary or final safety analysis report and amendments thereto satisfy the Objectives on Design Objectives for Light-Water-Cooled Nuclear Power Reactors proposed in the Concluding Statement of Position of the Regulatory Staff in Docket-RM-50-2 dated February 20, 1974, pp. 25-30, reproduced in the Annex to this Appendix.

Reactor licensees conduct and are required to conduct extensive monitoring and surveillance programs to demonstrate compliance with the limits in the regulations and in technical specifications. Releases and direct radiation from LLW activities, including storage, would be evaluated and included in demonstrating compliance with these standards, which

apply to the exposures from all activities at the site combined. The effectiveness of licensee ALARA and compliance efforts in response to these regulatory requirements are demonstrated by the low average doses received by members of the public from reactor operations. Inspection data since 1982 shows that effluents and direct radiation dose rates continue to decline. As doses to members of the public are calculated from this information, it is reasonable to assume that public doses have continued to decline as well.

Appendix E of this document presents historical data on effluents and doses to members of the public. While those who live nearest to NRC-licensed fuel-cycle facilities are in principle allowed to receive up to the 10 CFR Part 20 limit of 100 mrem/year, modified by the 25/75/25 mrem/year dose limits of 40 CFR 190, most receive only a small fraction of the allowable exposure. The ALARA programs in place to supplement the dose limit result in a system of dose control which achieves doses significantly below the limits. As a consequence of this approach, the average dose to most members of the public from NRC-licensed power reactor facilities is well below 1 mrem/yr (e.g., see Table 4.6, which shows that even for maximally exposed individuals, there are few instances of doses above 1 mrem/year, and Table 4.9, which presents 1988 data), and the contributions to this average dose from LLW storage activities are significantly less than this average.

The effectiveness of controls at power reactors was also confirmed in EPA's proposed rule to rescind Subpart I of EPA's Clean Air Act regulations in 40 CFR 61 (56 FR 37196; August 5, 1991). The annual dose limits in 40 CFR 61 are 10 mrems total effective dose equivalent, of which no more than 3 mrems effective dose equivalent can be from radioiodines. EPA stated:

Upon reconsideration of the standard, EPA conducted a review of the nuclear power reactor sector of the uranium fuel cycle and determined that the individual doses associated with nuclear power reactors are even lower than was previously estimated. This latest analysis revealed that the most exposed individual from emissions of nuclear power plants would be expected to receive a dose of less than 1.0 mrem/year EDE (effective dose equivalent) from all radionuclides and a dose of less than 0.01 mrem/year EDE from radioiodine. The estimated doses for these facilities are a factor of 10 less than the standard and are likely to remain low in the future.

Section 3.8 includes occupational and effluent data from actual steam generator replacements. The conclusion in 3.8.1.5 is that the effluents and doses have not been seen to differ significantly from normal operations. It is reasonable to conclude, then, that the incremental effluents and associated potential doses should be negligible from wastes after placement in storage facilities and/or packaging. Section 3.8.1.6 includes an estimate of 0.1 mrem/year as a maximum dose to an off-site person due to direct gamma dose from stored steam generators. This estimate should bound the potential public doses from on-site storage of refurbishment wastes. Section 3.8.1.6 also indicates that past storage facilities for the generators have provided sufficient shielding to limit the dose rate to less than 1 mrem/h outside the building.

Given its experience in inspecting licensees and in making determinations regarding compliance with existing requirements in this area, NRC has found that the actual doses and releases from LLW storage at plants have fallen within the applicable standards discussed above. Based on this past experience and the fact that NRC's regulatory program will continue to require compliance with the applicable regulations, including ALARA, NRC expects that the radiological impacts from LLW storage resulting from license renewal will neither deviate significantly from the kinds of impacts identified in the past nor exceed current regulatory requirements. NRC believes that doses and releases from LLW storage that fall within the range of current regulatory requirements should be considered small. The expected impact from on-site storage facility radiological effluents have been demonstrated to be a small fraction of those impacts allowed by regulation (Appendix I and 40 CFR 190).

6.4.4.5.3 LLW--Occupational

Tables B.4 and B.5 of Appendix B show total incremental occupational doses for refurbishing a BWR and a PWR. For the typical case, the values are 457 man-rem (4.57 man-sieverts) and 261 man-rem (2.61 man-sieverts), respectively. For the conservative case, the estimates are 2666 and 2374 man-rem (26.66 and 23.74 man-sieverts), respectively.

These two sets of estimates compare to the actual exposure ranges for refurbishing projects mentioned in Section 3.8.2.2 of 2 to 3500 man-rem. Baseline data through 1992 is presented in Table 3.11 for the collective occupational dose per plant and average individual whole body dose. Anticipated average individual doses for refurbishing activities are based on experience in the early 1980s when significant post-TMI refurbishment took place and are estimated to be between 0.4 and 0.8 rem; the 1992 average dose was about 0.3 rem. It is reasonable to assume that the doses due to emplacement of the steam generators or piping or other LLW into on-site storage would be undetectable in view of the nature of the activities and the range of uncertainty in estimating doses. Doses from inspection in storage and further handling after significant decay should be similarly undetectable. Assuming the continued application of ALARA to mitigate and reduce occupational exposures, the staff is unaware of any reason that average occupational exposures from on-site storage of refurbishment LLW would not also be well within regulatory limits.

For routine operations, Section 4.6.3 presents baseline data and projected doses for license renewal. Baseline data (1992) includes a 0.28-rem average occupational dose and the fact that less than 0.5 percent of the workers received doses in excess of 2 rem. As plants age, slight increases in inventories and added maintenance, testing, and inspection would result in slight increases in occupational doses. Doses are projected to increase by 5 percent for the typical case and 8 percent for the conservative case. Considering the range and uncertainties of doses and the projected annual increase, occupational doses during the license renewal term are estimated to remain well within current regulatory limits (Section 4.6.3.3). The staff does not believe that on-site occupational exposures from LLW extended storage activities would be detectable in view of the range of doses and associated uncertainties.

Assuming the continued application of ALARA to mitigate and reduce occupational exposures, staff is unaware of any reason that occupational exposures from extended on-site storage of operational LLW would not continue to be well within current regulatory limits.

6.4.4.5.4 Nonradiological Impacts

Potential nonradiological impacts to be considered for extended on-site storage of LLW are the same as those considered for refurbishment in Sections 3.1 through 3.6 and include land use, fugitive dust, air quality impacts, erosion, sedimentation, and disturbance of ecosystems. Section 3.2 indicates that land use during a recent steam generator replacement was about 1 ha (about 2.5 acres) and that up to 4 ha (10 acres) may be needed. This calculation included training areas and other operational needs in addition to temporary storage of the steam generator. This disturbed area might be used for extended storage, or more remote locations on the site may be used to keep occupational exposures ALARA. Only a fraction of the area should be needed for extended storage of refurbishment or operational LLW. Earlier in this chapter, areas are estimated to be a few tenths of an acre for a storage facility and a few acres for a buffer zone around the facility, based on current experience at several reactors. The facilities might need to double or quadruple the storage volumes for the operational waste during the renewal term, but land use would still be small. Any land used would already be under the control of the utility.

Section 3.3 concludes that the small size of the area to be disturbed for refurbishing activities and the likely mitigating management practices should result in minimal fugitive dust. Because the amount of land for extended storage facilities should be even smaller and the mitigating practices should apply, fugitive dust is not a concern for storage. Section 3.3 concludes that vehicle exhaust emissions could be a concern for a large number (e.g., 2300) of additional worker vehicles in nonattainment zones. Extended on-site storage facility construction would involve far fewer workers, and inspection and maintenance even fewer. As noted in Section 3.4.1, only modest amounts of site excavation and grading should be involved in construction of any LLW storage facility, and no unusual practices are involved. Mitigating measures routinely practiced at the plants should mitigate surface water impacts, including erosion and sedimentation. Ecological impacts could be associated with any new construction at a site, including LLW storage facilities. However, with the small size of the facilities and the flexibility of location for extended storage facilities (as opposed to short-term storage near the plant during refurbishing), it is expected that ecological concerns will be routinely addressed by the applicant in the design of the project. Routine monitoring and inspection of LLW extended storage facilities during the license renewal period should not have any significant nonradiological impacts.

6.4.4.6 LLW Conclusions

The comprehensive regulatory controls that are in place and the low public doses being achieved at reactors ensure that the radiological impacts to the environment will remain within regulatory standards and therefore will be small during the term of a renewed license. The maximum additional on-site land that may be required for LLW storage during the term of a renewed license and associated impacts will be small. Nonradiological impacts on air and water will be negligible. The radiological and nonradiological environmental impacts of long-term disposal of LLW from any individual plant at licensed sites are small. The need for the consideration of mitigation alternatives within the context of renewal of a power reactor license has been considered, and the Commission concludes that its regulatory requirements already in place provide adequate mitigation incentives. In addition, the Commission concludes that there is reasonable assurance that sufficient LLW disposal capacity will be made available when needed for facilities to be decommissioned consistent with NRC decommissioning requirements. LLW storage and disposal will have small environmental impacts. This is a Category 1 issue.

Although the impacts of limited and extended on-site storage of LLW that would be generated during the renewal period have been evaluated and found to be small, concern has been expressed that the slow progress that has been made in developing disposal capacity for LLW could result in extended storage of LLW at nuclear power plants. NRC recognizes that no state or compact has completed its work in developing new LLW disposal facilities. However, in NRC's view, there are no unsolvable technical issues that will inevitably preclude successful development of new sites or other off-site disposal capacity by the time they will be needed. NRC's experience in developing the requirements and guidance for licensing LLW disposal facilities under 10 CFR Part 61, as well as the successful licensing of the Envirocare disposal facility by the state of Utah, support the conclusion that safe LLW disposal is technically feasible. Opening the Barnwell site to all states but North Carolina in July 1995 also reflects the lack of insolvable technical issues. There are uncertainties in the licensing process and in the length of time needed to resolve technical issues, but we would expect that they are resolvable. For example, in California, the proposed Ward Valley disposal facility was unexpectedly delayed by the need to resolve technical issues raised by several scientists independent of the project after the license was issued. These were recently reviewed and largely resolved by an independent review group. In North Carolina, Texas, and Nebraska, the license application review period has been longer than what is required by the Low-Level Radioactive Waste Policy Amendments Act of 1985, but many issues for each of the proposed facilities have been resolved, and progress on other issues continues to be made. Further, it should not be unexpected today that states and compacts would face difficult obstacles of a political and legal nature as they seek to fulfill their responsibilities for providing disposal capacity. Nonetheless, we believe that the states and compacts possess the determination and the processes to address these obstacles, and we are not prepared to say they will be unsuccessful in doing so; on the contrary, their progress, although slow, supports our conclusion of eventual success. Therefore, the staff conclusion that either on-site or off-site storage of LLW as a Category I issue is appropriate because states are proceeding, albeit slowly, with the development of new disposal facilities and because LLW has been and can be safely stored at reactor sites until new disposal capacity becomes available.

6.4.5 Mixed Waste

Mixed waste contains both hazardous waste and source, special nuclear, or byproduct material as defined in the Atomic Energy Act (AEA) of 1954 (42 U.S.C. 2011 et seq.). Although nuclear power plants, on average, are not significant generators of mixed waste, the management of this waste is problematic because of a lack of sufficient waste treatment and disposal capacity for specific types of mixed wastes. The current situation may be complicated by a lack of economic incentives (i.e., sufficient market demand for commercial mixed waste treatment) necessary to accelerate the development of new treatment or disposal capacity. Currently, there is only one facility providing disposal for certain types of mixed waste, while four other companies provide treatment for a limited number of mixed-waste streams. A lack of treatment capabilities and technologies, in combination with a complex regulatory system, makes the environmentally sound management of mixed-waste a significant challenge for all commercial mixed-waste generators, including nuclear power plant operators.

The management of mixed waste at nuclear power plants is jointly regulated by NRC under the AEA and by EPA or authorized states under the Resource Conservation and Recovery Act of 1976 (RCRA). The NRC or the NRC

agreement states and EPA or EPA authorized states regulate off-site disposal. Nuclear power plants managing mixed waste must meet the NRC requirements for general radiation protection and emission control requirements and for LLW specified in 10 CFR 61 and EPA's requirements for hazardous waste in 40 CFR Parts 261, 264, and 265 (DOE/RW-0006) before final transfer off site in route to burial. Mixed wastes are also subject to land disposal restrictions (LDRs) in 40 CFR 268, except for newly listed hazardous wastes that are mixed with radioactive material and do not yet have EPA standards. The requirement for treating specific hazardous constituents of mixed waste (chlorinated fluorocarbons, lead, etc.) before land disposal is a contingency not faced in the management of LLW.

6.4.5.1 Generation

U.S. commercial low-level mixed waste consists of a variety of waste streams from a diverse set of generators, including government, academic, and industrial sectors, as well as nuclear utilities and medical facilities. Mixed-waste generation in the United States for s estimated at 139,441 ft^3 (3,949 m^3), f which nuclear power plants produced about 13,626 ft^3 (385.8 m^3) (less than 10 percent).

Mixed waste generated by nuclear power plants covers a broad spectrum of waste types. As shown in Table 6.13, the vast majority of mixed waste in storage at nuclear power plants was chlorinated fluorocarbons (CFCs) and waste oil. These wastes represented approximately 40 percent and 23 percent of the total stored mixed waste, respectively. In contrast to other commercial mixed-waste generators, nuclear power plants produce relatively small volumes of liquid scintillation fluids. Overall, mixed waste from nuclear power plants represented approximately 34 percent of the total mixed-waste volume in storage at the end of 1990. Table 6.13 is based on data from 76 of 78 nuclear facilities surveyed for the NRC and EPA (a facility may contain one or more reactors with common waste handling).

Based on data from the *National Profile on Commercially Generated Low-Level Radioactive Mixed Waste* (NUREG/CR-5938), mixed waste is not distributed uniformly among all nuclear power plants but is concentrated at a relatively few power plants. The average mixed waste generation in 1990 for the category "nuclear utilities" was 175 ft^3 (5 m^3) per facility. Twenty-four facilities reported no mixed-waste generation in 1990, while four facilities reported over 1000 ft^3 (28 m^3) of mixed-waste generation. One facility was responsible for approximately 24 percent of the mixed waste generated, while that facility and three others were responsible for over 60 percent of the mixed waste generated during 1990 (J. Klein, Oak Ridge National Laboratory, letter to L. N. McCold, Oak Ridge National Laboratory, July 3, 1993).

Variability in volume and type of mixed waste produced by nuclear power plants means that those plant operators that produce relatively large mixed-waste volumes annually may find it more difficult to comply with mixed-waste storage regulations. Specifically, the current EPA policy of ascribing a lower enforcement priority for violations of its storage prohibitions for LDR mixed waste expressly excludes generators that produce more than 1000 ft^3/year (28 m^3/year) of hazardous and mixed waste (L-S/488364).

6.4.5.2 Storage

Table 6.13 Nuclear power plant mixed waste generation profile for 1990, in cubic feet

Hazardous stream	Amount generated in 1990	Amount treated on site in 1990	Amount treated off site in 1990	Amount generated in 1990 that cannot be currently treated	Amount in storage at the end of 1990
Organics					
Liquid scintillation fluids	11	0	4	0	168
Waste oil	4,709	4,326	562	303	5,061
Chlorinated organics	50	0	0	5	512

Fluorinated organics	0	0	0	0	0
Chlorinated fluorocarbons	3,679	118	12	889	8,600
Other organics	1,154	15	7	79	1,284
Metals					
Lead	1,231	0	8	123	4,451
Mercury	4	0	0	2	416
Chromium	254	138	0	38	757
Cadmium	8	3	0	0	11
Aqueous corrosives	156	24	0	23	361
Other hazardous materials	2,369	168	2,274	8	363
Total	13,625	4,792	2,867	1,470	21,984

Note: Treatment and storage data are not necessarily additive because waste in either category may have been generated before 1990. Mixed waste that currently cannot be treated represents waste that may be difficult or even impossible to dispose of because of a lack of acceptable treatment capability or disposal capacity.*Source:* NUREG/CR-5938.

The current lack of mixed-waste treatment and disposal capacity requires nuclear power plant operators to store much of their mixed waste on site. As noted above, only one company in the United States (Envirocare of Utah, Inc.) currently provides disposal capacity for certain types of mixed waste, while four companies have treatment capabilities for certain types of mixed-waste constituents. The joint EPA and NRC survey referenced above estimated a treatment capacity shortfall of at least 12,000 ft^3 (340 m^3) based on treatment demand in 1990. The shortfall particularly affects CFCs, solid lead, and mercury mixed-waste streams. In 1991, EPA officially recognized that a treatment shortfall exists for many commercial low-level mixed-waste streams, including those generated by nuclear power reactors. Subsequent interviews by EPA with waste treatment vendors revealed that there has been little change in the availability of treatment capacity since EPA announced in 1991 that it would not pursue civil fines for those mixed-waste generators where sufficient treatment capacity of LDR-prohibited waste was not available.

Occupational exposures occur during the testing of mixed wastes (particularly decontamination wastes and ion exchange resins) to determine if constituents are chemically hazardous. A second occupational exposure impact of mixed waste is from on-site storage and handling (Rogers 1990). It has been estimated that the largest single exposures result from samples being collected when lead blankets have not been used to shield pipes and valves (Rogers 1990).

Occupational exposures from on-site storage have been shown to be reduced by the application of waste-minimization technologies and procedures (Rogers 1990). In addition, the potential for exposure can be reduced by remote sampling methods currently under development. Remote evaluation methods include classifying waste streams as mixed through the application of knowledge about processes that generate waste streams and substituting closed-circuit television using high-resolution monitors for weekly inspections by facility personnel (Rogers 1990). The latter method can determine if sufficient deterioration of a container has occurred to warrant proximate visual inspections.

Pursuing environmentally responsible management of mixed wastes is critical to minimizing occupational exposures as well as preventing waste from entering the accessible environment through various air and groundwater pathways. Specifically, records must be maintained identifying each physical location or unit where mixed waste is stored and identifying the method of storage [40 CFR 264.73(b) and 265.73(b)]. An inspection of these storage areas for compliance with applicable RCRA standards for storage methods, including an assessment of compliance with storage facility standards of 40 CFR 264 or 265 (interim status) should be performed regularly (see 40 CFR 264.15 and 265.15).

Facility owners/operators are required by RCRA regulations to maintain sufficient information to identify their mixed wastes. The information required includes RCRA waste codes for the hazardous components, the source of the hazardous constituents and discussion of how the waste was generated, the generation rate and volumes of mixed waste in storage, and any information relied upon to identify mixed wastes or make determinations that the wastes are prohibited by LDRs.

Finally, under RCRA regulations, each facility owner/operator is required to develop a waste-minimization plan that identifies process changes that can be made to reduce or eliminate mixed wastes, methods to minimize the volume of regulated wastes through better segregation of materials, and the substitution of nonhazardous materials. The plan must include a schedule for implementation, projections of volume reductions to be achieved, and assumptions that are critical to the accomplishment of the projected volume reductions (L-S/488364).

6.4.5.3 Disposal

There is currently only one facility that provides disposal capacity for certain types of mixed waste: Envirocare of Utah, Inc. Envirocare has a RCRA Part B permit from the Utah Division of Solid and Hazardous Waste, allowing the receipt, storage, and disposal of certain types of low-activity mixed wastes that are both radioactive and hazardous at its South Clive facility. The combination of stringent LDRs for hazardous waste constituents, the associated lack of treatment capacity for particular types of mixed wastes, and the absence of permitted disposal facilities all contribute to the need for many utilities to store their mixed wastes on site.

6.4.5.4 Effects of License Renewal

Mixed waste will continue to be generated by routine maintenance activities, refueling outages, health physics activities, and radiochemical laboratory activities both before and after the completion of license renewal. However, plant refurbishments and extended power plant operations are not expected to increase volumes of mixed waste generated significantly because of continued progress in reducing mixed-waste generation (Rogers 1990). Because refurbishments and nuclear power plant operations are conducted in compliance with applicable NRC and EPA regulations governing the storage and disposal of mixed wastes, exposures will be minimized (10 CFR 20; 10 CFR 61; 40 CFR 264 and 268).

The development and commercialization of noninvasive mixed-waste characterization technologies and treatment capacity would produce several benefits: it would reduce (1) the generation of secondary waste streams, (2) worker exposures to hazardous and radioactive materials, and (3) on-site inventories of untreated mixed waste. While there is reason to be optimistic that lower generation rates and new treatment capabilities will reduce on-site inventories, certain inventories will continue to grow because the relatively small amount of mixed waste generated across all generator categories has not provided sufficient economic incentives (i.e., market demand) required to stimulate a rapid expansion in treatment capabilities.

Despite the current lack of mixed-waste treatment and disposal capacity, new-mixed waste treatment and disposal capacity may still occur prior to license renewal activities. Specifically, DOE's need to develop extensive new mixed-waste treatment capabilities should benefit utilities requiring additional off-site treatment capabilities. DOE generates approximately 2,860,000 ft^3 (81,000 m^3) of mixed waste per year and has proximately 6,320,000 ft^3 (179,000 m^3) of mixed waste in storage, dwarfing the mixed-waste management requirements of other commercial generators (DOE/LLW-180). The mixed-waste inventory conducted by NRC and EPA has revealed that the characteristics of commercial mixed wastes are, for the most part, very similar to those produced by DOE. The development by DOE of new mixed-waste technologies and/or its willingness to accept nuclear utility low-level mixed waste for treatment and disposal could dramatically reduce on-site waste inventories associated with license renewal as well as produce significant economies of scale.

6.4.5.5 Regulations Applicable

NRC (10 CFR Part 20 and LLW requirements in 10 CFR Part 61) and EPA RCRA regulations.

6.4.5.6 Impacts of Extended On-Site Storage of Mixed Low-Level Waste

Preceding sections have discussed mixed waste from refurbishment and continued operations and presented the more likely events and impacts. The earlier discussion indicated that mixed-waste treatment and disposal capacity may become available before or during the license renewal period and that DOE acceptance of commercial LLW for treatment and disposal may provide relief. This additional section separately addresses the less likely scenario of on-site storage of both refurbishment and operational mixed LLW for the renewal period of approximately 20 years. Summary data are provided and radiological and nonradiological impacts are addressed. Radiological impacts to members of the public and workers are considered.

6.4.5.6.1 Mixed Waste Off-Site Radiological Impacts to Members of the Public

Mixed LLW generation is highly variable but projected to be about 5 m^3/year per plant, which is less than 3 percent of the LLW volumes (see Section 2.3.7.3 and the discussion in earlier in this chapter). Mixed waste is subject to additional regulatory requirements on containment. For example, RCRA hazardous regulations require maintenance of container integrity, berms, and other catchment means for capturing leaks to prevent or minimize releases of hazardous materials to the environment. Based on the results of the national mixed-waste profile discussed earlier, the predominant waste forms generated by the utilities were slightly contaminated waste oil (35 percent), chlorofluorocarbons (27 percent) and others (38 percent). The Rogers report (Rogers 1990) evaluated potential mixed-waste forms, including three types of resins, sludges, dry active waste, and absorbed liquids. While all mixed waste generated might be stored on site for the license renewal period if adequate treatment and disposal capacities or DOE acceptance of commercial mixed waste are delayed until near the end of the renewal period, the accumulated volumes will be small when compared to LLW volumes. Incremental effluents and doses to members of the public should be minimal and are subject to the same regulatory limits and enforcement as LLW and are included in the overall facility performance findings.

Off-site disposal impacts, as well as the impacts of limited and extended on-site storage of mixed waste that would be generated during the renewal period have been evaluated and found to be small. However, concern has been expressed that the limited progress that has been made in developing disposal capacity for LLW and mixed waste could result in extended storage of mixed waste at nuclear power reactors. Mixed-waste-disposal facility developers face the same types of legal and political challenges as LLW site developers. In addition, the administrative uncertainties of joint regulation and the economics of developing treatment and disposal capacity for the small volumes of mixed waste that are generated at licensed facilities have proven to be disincentives to the development of mixed-waste-disposal facilities.

In NRC's view, however, there are no technical reasons why off-site disposal capacity for all types of mixed waste should not become available when needed. NRC and EPA have developed guidance on the siting of mixed-waste-disposal facilities as well as a conceptual design for a mixed-waste-disposal facility. The agencies are currently cooperating on developing additional guidance on testing and storage of mixed waste. A disposal facility for certain types of mixed waste has been developed by Envirocare in Utah. Depending on the characteristics of the mixed waste, on-site or off-site treatment may allow disposal of certain mixed wastes as purely LLW. As discussed above, DOE is working to establish treatment technologies for its mixed wastes, many of which have characteristics similar to commercial mixed waste, and EPA is issuing treatment standards that will permit mixed wastes to be land disposed. In NRC's view, the foregoing activities support the conclusion that safe disposal of mixed waste is technically feasible. Further, states have begun discussions with DOE about accepting commercial mixed for treatment and disposal at DOE facilities. Although these discussions have yet to result in DOE's accepting commercial mixed waste at DOE facilities, it appears that progress is being made towards DOE's eventual acceptance of some portion of commercial mixed waste at its facilities.

Given the technical feasibility of mixed-waste disposal, the states' responsibilities for providing LLW (and thus mixed-waste) disposal capacity and DOE's obligations under the FFCA to develop treatment and disposal capacity for its

mixed waste, NRC believes that there will eventually be sufficient economic incentives to overcome nontechnical obstacles and to find cost effective ways to dispose of mixed waste. While the NRC understands that there have been some delays and that uncertainties exist, the staff concludes that there is reasonable assurance that sufficient mixed-LLW-disposal capacity will be made available when needed for facilities to be decommissioned consistent with NRC decommissioning requirements. Thus, in summary, mixed LLW will result in only a small environmental impact, taking into account both storage at a reactor site and disposal at an appropriate disposal site.

6.4.5.6.2 Occupational

Estimates of incremental occupational exposures from short-term and extended storage of mixed LLW have been made (Rogers 1990). The estimates were developed to evaluate ALARA problems for radiation exposures from compliance with RCRA sampling and inspecting requirements. When mixed LLW can be shipped immediately, doses from inspections were estimated to be about 3 man-rem per plant. With five years of accumulated mixed wastes, inspection exposures could rise to 100 man-rem/year per plant. Mitigating measures, including remote inspection, were considered essential to meet ALARA requirements. The doses in these estimates were based on assumed volumes and activities that should bound potential doses, since "these inventories are believed to represent conservatively high estimates of reactor-generated mixed wastes." (Rogers 1990). While sampling and handling were estimated to potentially result in significant doses in the 1990 study, absent ALARA mitigation such as use of lead blankets on contaminated piping with high exposure rates, they are included in current baseline exposures. The staff concludes that ALARA mitigating measures will continue to be developed and implemented by the utilities and RCRA regulatory authorities and that, even with the contribution of incremental occupational doses from extended storage, total individual occupational doses will continue to be will within regulatory limits and thus will be small.

6.4.5.6.3 Nonradiological

Because the volumes of mixed waste represent 3 percent or less of LLW volumes and because no significant emissions or releases of hazardous materials are expected, the staff concludes that the findings for LLW remain valid when both LLW and mixed-LLW impacts are considered.

6.4.5.6.4 Conclusion

The storage and disposal of mixed waste will continue to be accomplished well within regulatory limits. The comprehensive regulatory controls and the facilities and procedures that are in place ensure proper handling and storage, as well as negligible doses and exposure to toxic materials for the public and the environment at all plants. License renewal will not increase the small, continuing risk to human health and the environment posed by mixed waste at all plants. The radiological and nonradiological environmental impacts of long-term disposal of mixed waste from any individual plant at licensed sites are small. The need for consideration of mitigation alternatives within the context of renewal of a power reactor license has been considered and the Commission concludes that its regulatory requirements already in place provide adequate mitigation incentives for on-site storage of mixed waste and that, for off -site disposal, mitigation would be a site-specific consideration in the licensing of each facility. In addition, the Commission concludes that there is reasonable assurance that sufficient mixed-waste-disposal capacity will be made available when needed for facilities to be decommissioned consistent with NRC decommissioning requirements. The environmental impacts of mixed-waste storage and disposal will continue to be small during the license renewal period. This is a Category 1 issue.

6.4.6 Spent Fuel

Spent nuclear fuel is fuel that has been withdrawn from a nuclear reactor following irradiation, the constituent elements of which have not been separated. When spent fuel is removed from reactors, it is stored in racks placed in pools to isolate it from the environment and to allow the fuel rods to cool. Licensing plans contemplate disposal of spent fuel in a deep geological repository. Delays in siting an interim monitored retrievable storage (MRS) facility and permanent repository, as required by the Nuclear Waste Policy Act of 1982 as amended (Pub. L. 97-425 and 100-123), coupled with rapidly filling spent-fuel pools at some plants, have led utilities to seek means of continued on-site storage. These

include expanded pool storage (through repacking and double tiering), above-ground dry storage, longer fuel burnup to reduce the amount of spent fuel requiring interim storage, and shipment of spent fuel to other plants. The total inventory of spent fuel in storage in the United States as of December 31, 1992, was 91,039 assemblies. Of these, 87,591 assemblies were in storage at 118 reactors that have been or are discharging and/or storing nuclear fuel assemblies, including 903 assemblies in independent spent-fuel storage installations (ISFSIs) at Virginia Power's Surry plant, Carolina Power and Light Company's Robinson 2 plant, and Duke Power Company's Oconee plant. An additional 3,448 assemblies have been shipped to away-from-reactor storage facilities. This compares to the total licensed capacity for storage of spent nuclear fuel in the U.S. of 205,731 assemblies (SR/CNEAF/94-01). This section addresses the availability of interim on-site storage capacity for spent fuel (until an MRS or permanent repository is available) and the potential environmental effects of that interim storage.

6.4.6.1 Baseline

DOE is responsible for taking possession of spent fuel from nuclear power plants in 1998 for interim storage in an MRS, followed by permanent disposal in an underground repository (Pub. L. 97-425; Pub. L. 100-123; Gerstberger; DOE March 1987; Parker; Bartlett). However, the original 1998 target date for opening the repository will not be met, and the availability of an MRS on that date is also in serious doubt. DOE now expects to complete site characterization work at Yucca Mountain, the only location being investigated as a permanent repository, by 2002 and expects that a geologic repository will be ready no sooner than 2010 (NWTRB 1993; DOE/RW-0307P-6). Many plants have limited in-pool storage capacities and are turning to fuel pool expansion, above-ground dry storage, and longer fuel (Gilbert et al. 1990). Industry-wide, 24 plants may run out of pool storage space by the year 2000, and 81 will have run out of pool storage space by 2010, if DOE is unable to accept spent fuel in an MRS or for disposal in a permanent repository (SR/CNEAF/94-01). Of the ten sample plants, three will have exhausted their pools by 2000. The projected year of pool storage space exhaustion for the ten sample plants is given in Table 6.14. Deferral of an MRS or permanent repository would necessitate longer at-reactor storage and would exacerbate current storage capacity limitations (SR/CNEAF/94-01).

Table 6.14 Projected year of pool storage space exhaustion for the ten sample plants

Plant	Year of storage space exhaustion
Hatch 1	2003
Hatch 2	2004
Limerick 1	2000
Limerick 2	1996
Vermont Yankee	2004
WNP-2[a]	1999
Comanche Peak 1	2020
Comanche Peak 2	2021
D. C. Cook 1 and 2	2011
Indian Point 2	2003
Indian Point 3	2006
Robinson	2002
San Onofre 2 and 3	2005
Surry 1	2012
Surry 2	2013

[a]WNP-2 = Washington Nuclear Project 2.

Although plants running out of storage space may enter into agreements with others that have space for sale or lease, this approach is widely viewed as an interim measure practical only for utilities that own more than one nuclear plant (Asselstine 1985; DOE/RW-0187). Interim storage needs vary among plants, with older units likely to lose pool storage capacity sooner than newer ones. Robinson, for example, owned by Carolina Power and Light, has shipped some spent

fuel to Shearon Harris, which is owned by the same utility. Transfer of spent fuel from one nuclear plant site to another requires authorization by the receiving plant's operating license (55 FR 29181).

Table 6.15 lists historic and projected trends for spent-fuel discharges and radioactivity levels for LWRs. Projections in Table 6.15 are based on the assumptions that (1) no new units will enter operation, (2) installed capacity will gradually decline, (3) no spent fuel removed from reactors will be reinserted for further irradiation later, and (4) average burnup rate of spent fuel at all LWRs will increase by nearly one-third by 2000 (DOE/RW-0006). In the conservative scenario depicted in Table 6.15, annual spent-fuel discharges are expected to decline for BWRs and PWRs early in the next century. However, total accumulated spent-fuel volumes will more than triple between 1990 and 2020. Thus, continued storage of spent fuel on site may be an issue for some utilities regardless of their license renewal plans. At-reactor pool storage capacity has been increased under original operating licenses through (1) enlarging the capacity of spent-fuel racks, (2) adding racks to existing pool arrays ("dense-racking"), (3) reconfiguring spent fuel with neutron-absorbing racks, and (4) employing double-tiered storage (installing a second tier of racks above those on the pool floor). Each of these methods requires both the repackaging of spent-fuel rods and the handling associated with fuel bundles and racks.

Zircalloy-clad fuel bundles do not appear to degrade as a result of long-term pool storage (Gilbert et al. 1990), and accidental damage to spent-fuel bundles through mishandling or component failure during emplacement or removal from pools has occurred infrequently. A few spent-fuel assemblies have been inadvertently dropped or mishandled. A small fraction of these assemblies has suffered major mechanical damage through such incidents. In most cases, when spent-fuel assemblies were damaged during handling (mostly during refueling operations, with only 10 percent occurring within the spent-fuel pool), only minor degradation of fuel-bundle components occurred. No cases of breaching of fuel cladding or release of radioactive gases or solids to the environment have been reported (EPRI NP-3765; Bailey 1990). Operational incidents involving spent-fuel pools have occurred infrequently. One incident, at Hatch in December 1986, took place during an exceptional handling procedure in a transfer canal between two pools. At Turkey Point, the failure of a circulation pump in August 1988 led to a breach of pool containment and the flow of water into a closed-loop canal, confining the radiation release on site. While the safety significance of both events appears to have been low, subsequent inspection and enforcement actions have been instituted by NRC to reduce the likelihood of such occurrences in the future (55 FR 38472). NRC has also found that, even under the worst probable cause of a loss of spent-fuel pool coolant (a severe seismic-generated accident causing a catastrophic failure of the pool), the likelihood of a fuel-cladding fire is highly remote (55 FR 38474).

Table 6.15 Historic and projected spent-fuel inventories from commercial light-water reactors, 1970-2030 (not including license renewal)

Year	Fuel assemblies		Mass (MTIHM)[a]		Radioactivity (10^6 Ci)[b]	
	Annual	Total	Annual	Total	Annual	Total
			Boiling-water reactors			
			Historic			
1970		6	16	1	11	
1971		64	80	190	197	
1972		142	222	431	466	
1973		95	317	349	441	
1974		245	561	908	1,042	
1975		226	787	920	1,218	
1976		297	1,084	1,151	1,581	
1977		383	1,467	1,566	2,129	
1978		383	1,850	1,618	2,412	
1979		400	2,250	1,734	2,728	
1980		620	2,870	2,685	3,888	
1981		459	3,329	2,014	3,664	

1982		357	3,686	1,582	3,362	
1983		491	4,177	2,218	4,015	
1984		498	4,675	2,211	4,283	
1985		515	5,190	2,246	4,519	
1986		458	5,648	1,963	4,404	
1987		699	6,347	2,919	5,411	
1988		536	6,883	2,363	5,177	
1989		715	7,598	3,090	6,038	
1990		633	8,231	2,821	6,101	
1991		588	8,819	2,696	6,186	
1992		729	9,547	3,359	7,037	
			Projected			
1995	4,700	64,600	800	11,700	4,000	8,600
2000	3,900	82,400	700	14,800	3,300	9,100
2005	3,100	100,500	500	18,000	2,700	9,600
2010	3,800	120,500	700	21,500	3,200	11,100
2015	2,100	139,600	400	24,800	1,900	10,800
2020	1,700	150,000	300	26,700	1,500	9,600
2025	2,200	162,000	400	28,800	1,900	10,000
2030	0	165,900	0	29,500	0	7,000
			Pressurized-water reactors			
			Historic			
1970		39	39	204	204	
1971		44	83	247	296	
1972		100	183	545	638	
1973		67	250	374	571	
1974		208	458	1,098	1,320	
1975		322	780	1,683	2,098	
1976		401	1,181	2,222	2,894	
1977		467	1,648	2,660	3,677	
1978		699	2,347	4,030	5,428	
1979		721	3,068	4,185	6,254	
1980		618	3,686	3,667	6,248	
1981		676	4,362	4,025	6,887	
1982		640	5,002	3,797	7,037	
1983		772	5,775	4,590	8,077	
1984		842	6,616	4,978	8,943	
1985		861	7,478	5,196	9,641	
1986		1,001	8,478	5,969	10,909	
1987		1,114	9,592	6,687	12,240	
1988		1,125	10,717	6,865	13,132	
1989		1,227	11,944	7,422	14,347	
1990		1,532	13,476	9,405	17,026	
1991		1,298	14,774	8,049	16,881	
1992		1,601	16,375	10,032	19,374	
			Projected			
1995	3,500	48,200	1,500	20,700	9,800	21,400
2000	3,300	63,400	1,400	27,300	9,400	23,700

2005	2,900	78,700	1,300	33,800	8,500	25,500
2010	2,500	93,600	1,100	40,200	7,400	26,900
2015	1,900	106,900	800	46,000	5,600	26,800
2020	1,600	116,000	700	50,000	4,800	24,900
2025	1,200	123,200	500	53,100	3,500	23,000
2030	300	127,000	100	54,800	900	18,000
Total spent fuel (all light-water reactors)--projections						
1995	8,200	112,800	2,300	32,400	13,800	29,900
2000	7,200	145,800	2,100	42,100	12,700	32,800
2005	6,100	179,200	1,800	51,800	11,200	35,100
2010	6,400	214,100	1,800	61,700	10,600	38,000
2015	4,000	246,400	1,200	70,800	7,500	37,600
2020	3,300	266,000	1,000	76,700	6,300	34,500

[a]MTIHM = metric tons of initial heavy metal; 1 metric ton equals 2204.62 lb.
[b]Curies; 1 curie = 37 x 10^9 becquerels.

Source: DOE/RW-0006, Rev. 9.

Inadvertent criticality and acute occupational exposure are remote risks of dense-racking (DOE/RW-0220). NRC requires licensees to ensure against inadvertent criticality in fuel storage facilities by limiting quantities of stored fuel and by regulating the configuration of fuel bundles (NUREG-0575; 10 CFR 50). The latter includes regulating proper spacing between spent-fuel assemblies and using boron carbide in storage racks (DOE/RW-0220).

Dry storage technologies such as casks, silos, dry wells, and vaults have been developed in conjunction with dry-rod consolidation (EPRI NP-3765; Gilbert et al. 1990; Schneider et al. 1992). Monitoring of occupational exposure in pilot studies of dry-rod consolidation indicates that, because of reliance on remote manipulation techniques, doses received by workers are similar to those from normal fuel movement, in-service inspection, and repair activities (Gerstberger 1987; Zacha 1988; Johnson 1989). In addition, dry storage generates no LLW. Ten countries have at least small amounts of spent nuclear fuel in dry storage, with Canada, the United Kingdom, and the United States having industrial -scale facilities (Schneider et al. 1992). Dry storage appears to be a safe, economical method of spent-fuel storage (Roberts 1987; Johnson 1989). Fuel rods in dry storage appear to be environmentally secure for long periods of time (EPRI NP-3765). Dry storage is also simpler and more readily maintained than spent-fuel pools (DOE/RW-0220; 55 FR 38472).

All U.S. commercial nuclear reactors that are storing or planning to store nuclear fuel assemblies in an ISFSI are covered in Table 6.14, which lists data for each of these utilities and affected reactors. Utilities are listed by the date the dry storage license was issued. Environmental assessments for operational ISFSIs at these plants (in a number of different regions) indicate that long-term material and system degradation effects are minimal and that licensees can ensure the use of such systems in full compliance with health, safety, environmental, and safeguards and security criteria (55 FR 29181).

The three utilities that currently use the Nutec Horizontal Modular Storage (NUHOMS) Spent Fuel Storage System are Baltimore Gas and Electric Company, Carolina Power and Light Company, and Duke Power Company. Both GPU Nuclear Corporation and Sacramento Municipal Utility District plan to employ the NUHOMS system. The system consists of three major safety-related components: a dry shielded canister (DSC), which provides a high-integrity containment boundary; a controlled concrete horizontal storage module (HSM), which houses the stored DSC and provides radiation shielding, protection against natural phenomena, and an efficient means for decay heat removal; and a transfer cask, which provides for the safe shielded transfer of the DSC from the plant spent-fuel pool to the storage module. The NUHOMS system is designed and licensed to meet the requirements of 10 CFR 72 and ANS/ANSI 57.9 for ISFSIs.

From the standpoint of emergency preparedness, the impacts of dry cask storage installations should be minor for three reasons. First, because of the reduced radioactive inventory in the fuel stored in dry cask facilities, accidents involving such storage facilities are likely to develop more slowly than those involving the nearby operating reactors. Second, accident impacts should be low, again because of the reduced inventories of radioactive materials in the stored fuel but also because of the correspondingly reduced level of decay heat compared with fuel still in-reactor. Thus, emergency plans formulated for operating reactors should encompass accidents at dry cask storage facilities. Third, it is NRC policy that plants with dry cask storage facilities incorporate the potential sources of hazard from these storage facilities in their emergency plans, as well as the potential hazard from all radiological source terms at the plant site.

Table 6.16 shows present and anticipated spent-fuel management methods in 8 of the 10 plants in the study sample. Practices in these eight plants are illustrative of industry-wide trends. While pool storage remains the most widespread method of spent-fuel management, dry storage and extended burnup are actively under development, mirroring national trends. NRC-licensed, full-scale demonstrations of dry storage techniques at two plants (Surry and Robinson 2) provide insight into measures taken to reduce worker and population exposures under current operations.

Table 6.16 Spent-fuel management in eight sample plants and industry-wide: present and anticipated

Plant	Reracking[a]	Dry storage	Longer burnup[b]	Other[c]	Additional[d] construction
Plant sample					
Hatch	Yes	No	Yes	No	No
Robinson	Yes	Yes	Yes	Yes	Yes
Indian Point 2	Yes	Under study	Under study	Yes	No
Surry	Yes	Yes[e]	Yes	No	Yes
Vermont Yankee	Yes	Under study	Yes	No	Yes
Limerick	Yes	Under study[f]	Yes	Yes	Yes
WNP-2[g]	No[h]	In planning	No	No	Yes
Cook	Yes	Under study[i]	Yes	No	Yes
Industry-wide survey					
Industry-wide response, percent (n = 64) [j]	90.6	4.7	43.8	7.8	37.5
Industry-wide anticipated reliance on techniques until off-site disposal space becomes available, percent (n = 64) [j]	34.4	73.4	40.6	37.4	

[a]Indian Point 2's reracking is good through 2007; Vermont Yankee's, through 1998; and Limerick's, through 2011 and 2012 (Units 2 and 1, respectively). Cook reracked its spent-fuel pool in 1979 and plans to rerack its pool again in the 1993-1994 time frame. This is expected to yield sufficient storage until 2009.

[b]Surry and Vermont Yankee employ an 18-month fuel burnup cycle; Limerick is planning to be the first plant on a 24-month cycle.

[c]Robinson is planning transshipment, Indian Point will employ rod consolidation, and Limerick intends to employ a combination of high-enriched fuel, smaller reload batches, and rod consolidation.

[d]Robinson, Surry, Vermont Yankee, Limerick, Washington Nuclear Project 2, and Cook are planning either to build above-ground dry storage or to expand current storage facilities. Surry is building two additional storage "pads," d Limerick is planning a 165,000-ft^2 (15,300-m^2) facility for pool and dry storage.

[e]Surry's current dry storage facility will be full in 2010.

[f]Limerick will decide on the dry storage option in 2008.
[g]WNP-2 = Washington Nuclear Project 2.
[h]WNP-2 employs high-density racks.
[i]If pool storage proves insufficient for Cook after 2009, dry storage will be pursued.
[j]In updating data for the Final GEIS, the sample plants were resurveyed and published updates were used. However, no new industry-wide survey was undertaken because neither published updates nor sample plant data showed significant departures from previous trends.

Note: Of the 10 plants depicted in Section 6.1.1, Comanche Peak and San Onofre did not respond. Comanche Peak has not discharged spent fuel from its reactor as of February 1991 (SR/CNEAF/94-01). Because of multiple answers, percentages do not add up to 100 percent.

To meet the demand for additional storage space, Robinson has built an ISFSI with eight concrete HSMs to provide radiation shielding, protection against natural phenomena, and an efficient means of decay heat removal. The ISFSI is located inside the fence area of the Robinson 2 plant site. Each HSM is a steel-reinforced structure that holds seven intact assemblies in each module. The ISFSI was licensed by the NRC in August 1986.

Virginia Power was the first U.S. utility to use dry storage for spent nuclear fuel. The Virginia Power ISFSI located at the Surry Power Station, Surry, Virginia, houses metal storage casks. It was licensed by the NRC in July 1986. Each cask is 16 ft (4.9 m) high and 8 ft (2.4 m) in diameter, weighs 110 to 120 tons when loaded with fuel, and holds between 21 and 28 fuel assemblies. The casks sit on a reinforced-concrete pad 230 ft (70 m) long, 32 ft (9.7 m) wide, and 3 ft (1 m) thick. The facility and casks have been evaluated for extreme temperatures, extreme wind, snow and ice, loss of electrical power, loss of cask radiation shielding, tornadoes, gas pipeline explosions, and cask seal leakage and drops. By the end of 1990, a total of 252 assemblies had been stored in the ISFSI. By the end of 1991, 53 more assemblies were stored. In 1992, 63 more assemblies were stored, increasing the total number of assemblies in dry storage at Surry to 367 by the end of 1992. By 1995, an additional 250 assemblies will be in storage. The ISFSI has been licensed to hold up to 1764 assemblies.

Before these casks are placed into the ISFSI, they are filled with water and then submerged in the fuel pool to be loaded with spent-fuel assemblies (Godlewski 1987; Wakeman 1989). This procedure limits occupational exposure because the water is a radiation barrier. Individual and collective radiation doses to workers and the public are small (NRC Docket No. 72-2). Also, because the filling operation takes place within the pool containment area, contact with groundwater or surface water and other resources is also prevented. After filling, the casks are fastened with lids, water is pumped out, and the casks are backfilled with helium to prevent corrosion.

For the ISFSI facility itself, a few tenths of an acre are disturbed and occupied; in addition, a few acres are maintained for "intruder" exclusion or controlled access, as well as to limit worker dose. This additional acreage is still relatively small. At Surry, the ISFSI is designed to hold about 63 casks in an area of about 15 acres (6 ha), while Prairie Island will be able to store 48 casks on about 10 acres (4 ha) (Minnesota EQB 1991). Exclusion areas (included in these totals) usually occupy an already disturbed plant site and do not entail additional construction.

Longer fuel burnup reduces the volume of spent fuel removed from the core, deferring the need for additional storage space. An increase in fuel burnup to a maximum of 45 GWd/MTU for PWRs and 38 GWd/MTU for BWRs could halve the amount of spent fuel requiring off-site disposal (Gilbert et al. 1990). Increased burnup can also increase the specific activity of activation products in the radioactive waste system as well as fission products and transuranic-waste concentrations in plant waste streams (AIF/NESP-032; EPRI NP-5983). Extended burnup has not resulted in a higher incidence of failed fuel rods or breached cladding (EPRI NP-3765; SR/CNEAF/94-01). Several plants in the study sample are using or contemplating longer burnup (see Table 6.16).

Indian Point 2 is reracking its fuel pool for storage through 2007. Dry storage, rod consolidation, and longer burnup also will be considered. Vermont Yankee and Cook have reracked their pools to provide higher-density packing and are

considering additional reracks. Limerick intends to rerack its pool to permit storage until 2011 at Unit 2 and until 2012 at Unit 1. If dry storage is undertaken, current economics favor the use of concrete casks at Limerick. If no repository is available after 2011, Limerick will employ a combination of dry storage and rod consolidation. Because of initial use of high-density fuel racks, WNP-2 plans no reracking. Surry's current ISFSI will be full by 2010, necessitating consideration of other options during the remainder of the plant's current license, including longer fuel burnup (the plant currently operates on an 18-month cycle) and possible construction of two additional storage pads for dry storage of spent fuel.

6.4.6.2 Effects of License Renewal

During the period encompassed by plant life extension, the amount of spent fuel generated annually by nuclear power plants will be a function of each plant's refueling schedule. The amount of spent fuel generated will be roughly proportional to the electrical energy produced by each plant. If all currently operating plants were to request renewed licenses, annual spent fuel generation should be comparable to those amounts generated under original licenses. Thus, total accumulated volumes of spent fuel after an additional 20 years of operation would amount to 50 percent more fuel than at the end of 40 years of operation (DOE/RW-0006). Projections of spent-fuel generation depicted in Table 6.15 are conservative estimates that do not account for nuclear plant life extension.

Under the Waste Confidence Rule, NRC has determined that spent fuel can be stored on-site for at least 30 years beyond the licensed (and license renewal) operating life of nuclear power plants safely and with minimal environmental impact (54 FR 39765; 55 FR 38472). This decision does not address the environmental impacts of storage during the additional 20 years of operation after license renewal. The additional spent fuel generated during this 20-year period poses three potential issues.

First, under the Nuclear Waste Policy Act of 1982 (NWPA) as amended, DOE is authorized to dispose of up to 70,000 metric tonnes of heavy metal (MTHM) in the first repository before granting a construction authorization for a second. Under existing licenses, projected spent-fuel generation could exceed 70,000 MTHM as early as the year 2010. Possible extensions or renewals of operating licenses also need to be considered in assessing the need for and scheduling the second repository. It now appears that unless Congress lifts the capacity limit on the first repository--and unless this repository has the physical capacity to dispose of all spent fuel generated under both the original and extended or renewed licenses--it will be necessary to have at least one additional repository. Assuming that the first repository is available by 2025 and has a capacity on the order of 70,000 MTHM, additional disposal capacity would probably not be needed before about the year 2040 to avoid storing spent fuel at a reactor for more than 30 years after expiration of reactor operating licenses.

Second, the NWPA prohibits the opening of an MRS until a permanent repository has been selected and constructed (Pub. L. 97-425). Moreover, the findings of environmental assessments for the MRS and permanent repository must be incorporated in facility design (DOE/RW-0187; GAO/RCED-90-103). Both of these requirements could cause additional delays in the availability of an MRS or permanent repository, necessitating longer on-site storage of the additional spent fuel. Current efforts to identify a host site for an MRS are unlikely to provide for a completed facility by 1998 (GAO/RCED-91-194).

Third, plant refurbishment during license renewal may also adversely affect spent-fuel storage capacity. Utilities may use fuel pools for interim storage of reactor components, as is being done at Vermont Yankee.

During the license renewal period, utilities will focus increasingly on dry storage methods for spent fuel. Either wet or dry storage would meet NRC's Waste Management Confidence Decision Review (49 FR 171; 10 CFR 50 and 51; 54 FR 187), but dry storage is growing in favor because it is more stable. Enlarging spent-fuel racks, adding racks to existing pool arrays, reconfiguring spent fuel with neutron-absorbing racks, and employing double-tiered storage will continue to be pursued; however, above-ground dry storage, utility sharing of spent fuel, and increased fuel burnup to reduce spent-fuel volumes will be the most favored methods until a permanent off-site repository or MRS becomes

available, as shown by the study sample and industry-wide survey (Roberts 1987; Mullen et al. 1988; Zacha 1988; Johnson 1989; Fisher 1988).

Industry experience with spent-fuel storage, coupled with supplemental studies of the integrity of pool and dry storage systems, indicates that spent fuel generally can be stored safely on site with minimal environmental impacts (55 FR 38474; NUREG-1092). However, a maintenance concern with spent-fuel pools at permanently closed power plants was identified recently (*Nuclear Waste News* 1994). In January 1994, at the permanently shutdown (since 1978) Dresden Unit 1, a large amount of pool water leaked from a frozen service-water pipe located in the unheated containment building. Because the spent fuel had cooled for 15 years, lowering the pool water depth in this case did not cause significant increases in worker exposure. However, this incident has led to additional safety precautions' being implemented at all permanently shutdown plants.

Extended pool storage provides a benign environment that does not lead to degradation of the integrity of spent-fuel rods. Moreover, continuing advances in dry storage techniques, particularly in standardization of procedures and equipment, indicate that these systems are simple, passive, and easily maintained (53 FR 31651; NUREG-1092; Mullen et al. 1988).

For pool storage, while plant life extension could possibly increase the likelihood of inadvertent criticality through dense-racking or spent-fuel handling accidents, NRC regulations are in place to satisfactorily address this problem. In addition, studies of fuel rod or cladding failures indicate that fuel rods should remain secure well beyond the period of plant life extension, if it becomes necessary to continue pool storage on site (EPRI NP-3765; AIF/NESP-032; EPRI NP -5983; Bailey 1990; Gilbert et al. 1990; 55 FR 38474).

As a result of the operational experience demonstrated by Surry, Robinson, Oconee, and Ft. St. Vrain, NRC has determined that ISFSI methods of dry storage are sufficiently well developed, safe, and dependable to permit the generic licensing for any nuclear plant licensee (provided the plant licensee notifies NRC of the intent to use an ISFSI, uses NRC-certified casks, follows all specified conditions for their use, and provides a full description and safety assessment of the proposed site for an ISFSI) (55 FR 29181; 53 FR 31651). Worker and population exposures are minimal, and ISFSIs use only a small fraction of available land. Environmental assessments undertaken for all ISFSIs have resulted in issuance of findings of no significant impact (NRC Dockets 72-2, 72-3, 72-4, and 72-9).

The principal occupational exposures from spent-fuel management will occur during repackaging of spent-fuel rods and during construction and handling activities associated with moving and storing spent-fuel bundles and racks. While these impacts are expected to vary by the amount of fuel requiring storage, occupational doses during the period of license renewal are not expected to result in doses in excess of present levels (Section 4.6.3). Environmental impacts to on-site land availability should be minimal, given the small amount of land required for expanded spent-fuel pools and dry storage facilities.

6.4.6.3 On-Site Storage of Spent Fuel

Current and potential environmental impacts from spent-fuel storage have been studied extensively and are well understood. Storage of spent fuel in spent-fuel pools was considered for each plant in the safety and environmental reviews at the construction permit and operating license stage. The Commission has studied the safety and environmental effects of the temporary storage of spent fuel after cessation of reactor operation and published a generic determination of no significant environmental impact in its regulations at 10 CFR 51.23. The environmental impacts of storing spent fuel on site in a fuel pool for 10 years prior to shipping for off-site disposal were assessed and are included within the environmental data given by Table S-3, found in the Commission's regulations at 10 CFR 51.51. Environmental assessments (EA) for expanding the fuel-pool storage capacity have been conducted for more than 50 plants. A finding of no significant environmental impact was reached for each fuel-pool capacity expansion. Dry cask storage at an ISFSI is the other technology used for spent-fuel storage on site. The Commission has conducted EAs for seven site-specific licensed ISFSIs and has reached a finding of no significant environmental impact for each. The Commission has recently amended its regulations in 10 CFR 72 to allow power reactor licensees to store spent fuel on

their sites under a general license. The environmental impacts of implementing this rule were analyzed in an EA that incorporated EAs performed for previous rulemakings related to 10 CFR 72 and for the Commission's Waste Confidence Decision.

At the construction permit and operating license stage, both the 10 CFR 50 safety review and the 10 CFR 51 environmental review contributed to understanding the potential radiological and nonradiological environmental impacts of fuel-pool construction and operation. The design and operating conditions of spent-fuel pools and their various auxiliary systems were reviewed to ensure that the design criteria of Appendix A to 10 CFR 50 are met. These criteria address (1) control of releases of radioactive materials to the environment, (2) fuel storage and handling and radioactivity control, (3) prevention of criticality in fuel storage and handling, (4) monitoring fuel and waste storage, and (5) monitoring radioactive releases. These criteria ensure that radioactive releases to the environment are controlled and acceptable and that effluent discharge paths and the plant environs are monitored for radioactivity. Appendix I to 10 CFR 50 provides the numerical objectives for the design objectives and limiting conditions for operation required to meet the ALARA criterion for radioactive material in the total effluent from an LWR. The objectives were quoted earlier in this chapter and include an objective that total radioactive material in liquid effluent should not result in an annual dose or dose commitment to the total body or to any organ of an individual in an unrestricted area for all pathways of exposure in excess of 5 mrem. In addition, the calculated annual total quantity of radioactive material, except tritium and dissolved gases, should not exceed 5 Ci for each reactor at a site. Appendix I objectives for annual total gaseous effluent of radioactive material for all reactors at a site is that gamma radiation doses should not exceed 10 mrad and beta radiation doses should not exceed 20 mrad for an individual located at or beyond the site boundary. Radioactive materials from the spent-fuel pool contribute a small fraction of the total radioactive materials released from a plant. It is the total releases that need to meet Appendix I numerical objectives. In the construction permit and operating license review for each plant, a thorough assessment is made of calculated releases of curies per year of radioactive materials in both liquid effluent and in gaseous effluent, the exposure pathways, and the impacts to man and biota other than man.

The Commission has considered whether radioactive wastes generated in nuclear power reactors can be subsequently disposed of without undue risk to the public health and safety and the environment. As stated in its regulations at 10 CFR 51.23:

(a) The Commission has made a generic determination that, if necessary, spent fuel generated in any reactor can be stored safely and without significant environmental impact for at least 30 years beyond the licensed life for operation (which may include the term of a revised or renewed license) of that reactor at its spent-fuel storage basin or at either on-site or off-site independent fuel storage installations. Further, the Commission believes that there is reasonable assurance that at least one mined geological repository will be available within the first quarter of the twenty-first century, and sufficient repository capacity will be available within 30 years beyond the licensed life for operation of any reactor to dispose of the commercial high-level waste and spent fuel originating in such reactor and generated up to that time.

In accordance with this determination the rule also provides that no discussion is required concerning environmental impacts of spent-fuel storage for the period following the term of the reactor operating license, including a renewed license. The waste confidence determination was first published in 1984 at 49 FR 34694, August 31, 1984 and was amended in 1990 at 55 FR 38474, September 18, 1990. Additional information and explanation of the safety and environmental considerations supporting the waste confidence determination are given in the notice of the proposed rule amendment, 54 FR 39767, September 28, 1989.

The environmental impacts of storing spent fuel on site in a fuel pool for 10 years prior to shipping for off-site disposal are incorporated in the data presented in Table S-3. The environmental impacts of storage of spent fuel in a fuel pool are given in Table 2.5 of NUREG-0116, *Environmental Survey of the Reprocessing and Waste Management Portions of the LWR Fuel Cycle*. Commitment of land, water consumption, chemical effluent, gaseous, liquid and solid radiological effluent, and thermal effluent are all negligible.

Since 1984, licensees have continued to provide safe and environmentally innocuous additional reactor-pool storage capacity through reracking. Over 50 reviews for the expansion of fuel-pool capacity have been completed by the Commission. Each review has resulted in a finding of no significant environmental impact. The reracking activities take place within existing structures and already disturbed land areas, and the changes in radiological, nonradiological, and thermal effluent are negligible.

Dry storage of spent fuel at ISFSI has been extensively studied by the Commission, and the environmental impacts are well understood. Licensing requirements for the independent storage of spent fuel and HLW are given in 10 CFR 72. In part, these regulations cover siting evaluation factors, general design criteria, general license for storage of spent fuel at power reactor sites, and approval of spent-fuel storage casks.

6.4.6.4 On-Site Dry Cask Storage

On-site dry cask storage of spent fuel can be accomplished either by a specific license issued under 10 CFR 72.40 or by the provisions of a general license issued under 10 CFR 72.210 for an ISFSI at operating power reactors. To date, seven specific licenses have been issued under 10 CFR 72.40 and one general license issued under 10 CFR 72.210 is operational. For each specific license the Commission has prepared an EA and a finding of no significant impact. Each EA addressed the impacts of construction, use, and decommissioning, including fugitive dust, erosion, noise, heat, and radiological impacts. The Commission also prepared an EA for the general license issued on July 18, 1990 (55 FR 29191). The Commission does not prepare an EA for each general licensee but does prepare an EA for each dry storage cask listed under 10 CFR 72.214 which is approved for use by general ensees. Currently seven casks are listed under 10 CFR 27.214 and it is anticipated that more will be added. General licensees can use only casks listed under 10 CFR 72.214.

EAs prepared for site-specific licenses include site description, need for action, alternatives, site and environment, description of the ISFSI, environmental impacts of proposed action, safeguards for spent fuel, decommissioning, and finding of no significant impact. Under the environmental impacts of the action, the following are considered: land use and terrestrial resources, water use and aquatic resources, noise and air-quality impacts of construction, socioeconomic impacts of construction, radiological impacts of construction, radiological impacts of routine operations, off-site dose, collective occupational dose, radiological impacts of off-normal events and accidents, land use and terrestrial resources, water use and aquatic resources, other effects of operation, and resources committed.

Using the Calvert Cliffs Nuclear Power Plant Site ISFSI EA as typical, the following impacts are evaluated. Land use is about six acres, which is within the owner-controlled area of 2300 acres. During construction of the pad, water for cleaning, drinking, and fugitive dust control was transported to the site by truck. Storm-water runoff and sediment were controlled according to local codes. Air quality had a temporary increase of suspended particulate material, hydrocarbons, carbon monoxide, and oxides of nitrogen from construction activities. The size of the work force was not expected to exceed 50 people. This expanded work force had little impact in the area with large population growth. During initial construction there were no radiological impacts. As construction proceeded, after filling some storage modules, radiation was controlled with temporary shielding to meet NRC and ALARA exposure requirements. Dry storage of spent fuel in welded canisters has no gaseous or liquid effluents. The exposure of the nearest resident, 4705 ft from the facility, when the facility is filled with design-basis spent fuel in 120 modules, the license limit, is less than one mrem/year. The exposure of that resident from other operations at the site is 13.5 mrem/year. These exposures are well within the requirements of 10 CFR 72.104 and 40 CFR Part 190 limits of 25 mrem/year. By year 2010 there are projected to be about 500 people living between 1 and 2 miles of the Calvert Cliffs Station. The collective dose is estimated to be about 101 man-rem/year. Occupational exposure in constructing additional modules after the initial set has been loaded is expected to total about 4 man-rem. Once all 120 modules are loaded, the radiation exposure from the ISFSI is expected to be less than 5 percent of the total site yearly exposure of 350 man-rem. Worst-case accident dose was calculated to be 23 mrem to the whole body and 111 mrem to the thyroid at the nearest residence. Heat from the modules is not expected to be high enough to affect vegetation growth. Fences will discourage some wildlife species from using the area adjacent to the modules. There is no planned use of water or liquid discharge to local surface or groundwater supplies. Surface runoff from precipitation will enter the Chesapeake Bay under existing drainage routes,

but it is not expected to result in negative impact to water quality. Rain may vaporize and form a localized fog over the modules that would not extend beyond the plant exclusion boundary. Noise during construction and movement of fuel would not be distinguishable from other operational noise at the site or to result in adverse impact to local residents. The Commission believes that the impacts discussed above reasonably describe the impacts from existing dry cask storage facilities, as well as the likely impacts from those dry cask storage facilities that are expected to be constructed as a result of license renewal.

The Commission prepares an EA for each approved cask listed in 10 CFR 72.214. These EAs are tiered off the "Final Waste Confidence Decision," August 31, 1984 (49 FR 34688), the *Environment Assessment for 10 CFR 72 "Requirements for the Independent Storage of Spent Fuel and High-Level Radioactive Waste*," NUREG-1092 (August 1984), and the "Environmental Assessment for Proposed Rule Entitled `Storage of Spent Nuclear Fuel in NRC-Approved Storage Casks at Nuclear Power Reactor Sites,'" for the proposed rule published on May 5, 1989 (54 FR 19379). Additional impacts evaluated are those associated with the construction, use, and disposal of the cask. These impacts are very small compared to the total impact of the steel industry, plastics industry, and the concrete industry. The incremental impacts of cask use are considered small. No effluents, either gaseous or liquid, are expected from the sealed casks. Incremental radiation doses off site are also considered to be small compared to those from the other operations on the site. Based on the above summary a finding of no significant impact is appropriate. This finding has been made for each of the seven casks listed in 10 CFR 72.214. Power reactor licensees using one of the listed casks under a general license do not need to prepare an environmental report, nor does the NRC have to prepare an EA.

6.4.6.5 Expanding Fuel-Pool Capacity

The Commission prepares an EA for each request to expand the capacity of a spent-fuel pool. The EA prepared for the increase in the allowed fuel assembly storage for the Pilgrim Nuclear Power Station is a typical example of this type of action. Alternatives looked at include (1) shipment of fuel to a permanent federal fuel-storage/disposal facility, (2) shipment of fuel to a reprocessing facility, (3) shipment of fuel to another utility or site for storage, (4) reduction of spent-fuel generation, (5) construction of a new independent spent-fuel storage installation, and (6) no action. After evaluating the alternatives, the proposed action of increasing the capacity of the spent-fuel pool is the best one at the time; however, in the longer term, an ISFSI is the solution. Radioactive exposures, waste generation, and releases were evaluated and found to be incrementally small. The only nonradiological effluent is additional heat rejected from the plant. This additional heat is small compared to the total rejected by the rest of the plant, and it will have a negligible effect on the environment. The risks due to accidents and their environmental effects are found to be not significant.

6.4.6.6 Regulations Applicable

10 CFR Parts 72, 60, and 61.

6.4.6.7 Conclusion

The Commission's waste confidence finding at 10 CFR 51.23 leaves only the on-site storage of spent fuel during the term of plant operation as a high-level-waste storage and disposal issue at the time of license renewal. The Commission's regulatory requirements and the experience with on-site storage of spent fuel in fuel pools and dry storage has been reviewed. Within the context of a license renewal review and determination, the Commission finds that there is ample basis to conclude that continued storage of existing spent fuel and storage of spent fuel generated during the license renewal period can be accomplished safely and without significant environmental impacts. Radiological impacts will be well within regulatory limits; thus radiological impacts of on-site storage meet the standard for a conclusion of small impact. The nonradiological environmental impacts have been shown to be not significant; thus they are classified as small. The overall conclusion for on-site storage of spent fuel during the term of a renewed license is that the environmental impacts will be small for each plant. The need for the consideration of mitigation alternatives within the context of renewal of a power reactor license has been considered, and the Commission concludes that its regulatory requirements already in place provide adequate mitigation incentives for on-

site storage of spent fuel. On-site storage of spent fuel during the term of a renewed operating license is a Category 1 issue.

6.5 Nonradiological Wastes

[**Prev** | **Next** | **Table of Contents**]

Nonradiological wastes from routine plant operations include those from cooling system blowdown (continual or periodic purging of impurities from cooling systems), water treatment wastes (sludges and high-saline streams whose residues are disposed of as solid waste), boiler metal cleaning, floor and yard drains, storm-water runoff, sewage wastes, and cleaning solvents (NUREG-0020). Descriptions of these waste-generating systems are provided in Section 2.1.6. If nonradiological sanitary wastes cannot be processed by on-site water treatment systems, they are collected by independent contractors and trucked to off-site treatment facilities. If wastes have hazardous constituents, proper handling and disposal are required to minimize potential contamination of surface water and groundwater. In this section, a review of literature on nonradiological waste management throughout the industry was used to depict baseline conditions and to infer the effects of license renewal.

6.5.1 Baseline

Stringent regulations governing the generation of nonradioactive solid waste and the resulting efforts of utilities to establish waste minimization and pollution prevention programs are expected to produce a general decline in the general production of waste by nuclear power plants during the period prior to license renewal. Nonradioactive hazardous solid waste disposal from all nuclear power plants is governed by RCRA (Pub. L. 94-580). RCRA requires EPA and state agencies to establish a permit system for disposal of these wastes in licensed landfills. Utilities have undertaken changes in operation to ensure proper handling and disposal of these wastes in accordance with RCRA, including periodic removal of septic tank sludge by a licensed contractor and disposal on or off site in an approved sanitary system. Construction-related solid wastes are discharged to holding ponds until chemical discharges and runoff are suitable for discharge to surface waters on a batch basis. These latter discharges must comply with allowable standards under RCRA permits.

6.5.2 Effects of License Renewal

Solid nonradiological waste from blowdown, water treatment, boiler metal cleaning, floor and yard drains, storm-water runoff, and sewage wastes will likely remain of limited concern during license renewal for three reasons. First, no changes to the systems that generate these wastes are anticipated as a result of license renewal for all plants. Second, existing regulations, including National Pollutant Discharge Elimination System permitting for low-volume wastewater and RCRA permitting for solid wastes such as chemical solvents, are also likely to become increasingly stringent through further amendment (OTA-O-426). Third, statutorily mandated waste-minimization programs, which are expected to incorporate new waste-management technologies, should reduce further the volume of solid nonradioactive waste produced by nuclear power plants.

Some plants may require construction of interim storage facilities for LLW and spent fuel. Construction of these facilities would generate rubble and other debris on a short-term basis. This temporary increase of waste would be typical of that generated by any construction activity in an industrial complex and would be controlled by federal and state regulations. Hence, management of this waste stream would not pose any new or unique issues and would not be expected to result in impacts of concern.

6.5.3 Conclusion

Generation and management of solid nonradioactive waste during the terms of an extended license are not expected to result in significant environmental impacts. No changes to plant systems or mode of operation have been identified that would increase the quantities of waste generated or change the nature and types of waste in a manner that would be of environmental concern. In fact, regulatory and operational trends suggest a gradual decrease in quantities generated annually and the impacts during the terms of renewed licenses. Facilities and procedures are in place to ensure continued proper handling and disposal at all plants. Consequently, the generation and management of solid

nonradioactive waste for up to 20 years beyond the terms of the original 40-year license of nuclear power plants is anticipated to result in only small impacts to the environment. Because the facilities and procedures that are in place are expected to ensure continued proper handling and disposal at each plant, additional mitigative measures are not a consideration in the context of a license renewal review. This is a Category 1 issue.

6.6 Summary

[**Prev** | **Next** | **Table of Contents**]

The following conclusions have been drawn with regard to the environmental impacts associated with the uranium fuel cycle and with the management of waste generated during nuclear power plant operations beyond the terms of their original 40-year licenses.

- The radiological and nonradiological environmental impacts of the uranium fuel cycle have been reviewed. The review included a discussion of the values presented in Table S-3, an assessment of the release and impact of ^{222}Rn and of ^{99}Tc, and a review of the regulatory standards and experience of fuel-cycle facilities. For the purpose of assessing the radiological impacts of license renewal, the Commission uses the standard that the impacts are of small significance if doses and releases do not exceed permissible levels in the Commission's regulations. Given the available information regarding the compliance of fuel-cycle facilities with applicable regulatory requirements, the Commission has concluded that, other than for the disposal of spent fuel and high-level waste, these impacts on individuals from radioactive gaseous and liquid releases will remain at or below the Commission's regulatory limits. Accordingly, the Commission concludes that off-site radiological impacts of the fuel cycle (individual effects from other than the disposal of spent fuel and high-level waste) are small. ALARA efforts will continue to apply to fuel-cycle activities. This is a Category 1 issue.

- The radiological impacts of the uranium fuel cycle on human populations over time (collective effects) have been considered within the framework of Table S-3. The 100-year environmental dose commitment to the U.S. population from the fuel cycle, high-level-waste and spent-fuel disposal excepted, is calculated to be about 14,800 man-rem, or 12 cancer fatalities, for each additional 20-year power reactor operating term. Much of this, especially the contribution of radon releases from mines and tailing piles, consists of tiny doses summed over large populations. This same dose calculation can theoretically be extended to include many tiny doses over additional thousands of years as well as doses outside the U.S. The result of such a calculation would be thousands of cancer fatalities from the fuel cycle, but this result assumes that even tiny doses have some statistical adverse health effect that will not ever be mitigated (for example, no cancer cure in the next thousand years) and that these dose projections over thousands of years are meaningful. However, these assumptions are questionable. In particular, science cannot rule out the possibility that there will be no cancer fatalities from these tiny doses. For perspective, the doses are very small fractions of regulatory limits, and even smaller fractions of natural background exposure to the same populations. No standards exist that can be used to reach a conclusion as to the significance of the magnitude of the collective radiological effects. Nevertheless, some judgment as to the regulatory NEPA implication of this issue should be made, and it makes no sense to repeat the same judgment in every case. The Commission concludes that these impacts are acceptable in that these impacts would not be sufficiently large to require the NEPA conclusion, for any plant, that the option of extended operation under 10 CFR 54 should be eliminated. Accordingly, while the Commission has not assigned a single level of significance for the collective effects of the fuel cycle, this issue is considered Category 1.

- There are no current regulatory limits for off-site releases of radionuclides for the current candidate repository site. However, if we assume that limits are developed along the lines of the 1995 NAS report and that, in accordance with the Commission's Waste Confidence Decision, a repository can and likely will be developed at some site that will comply with such limits, peak doses to virtually all individuals will be 100 mrem/year or less. However, while the Commission has reasonable confidence that these assumptions will prove correct, there is considerable uncertainty because the limits are yet to be developed, no repository application has been completed or reviewed,

and uncertainty is inherent in the models used to evaluate possible pathways to the human environment. The National Academy report indicated that 100 mrem/year should be considered as a starting point for limits for individual doses, but notes that some measure of consensus exists among national and international bodies that the limits should be a fraction of the 100 mrem/year. The lifetime individual risk from 100 mrem/year dose limit is about 3×10^{-3}. Doses to populations from disposal cannot now (or possibly ever) be estimated without very great uncertainty.

Estimating cumulative doses to populations over thousands of years is more problematic. The likelihood and consequences of events that could seriously compromise the integrity of a deep geologic repository were evaluated by the Department of Energy in the *Final Environmental Impact Statement: Management of Commercially Generated Radioactive Waste*, October 1980. The evaluation estimated the 70-year whole-body dose commitment to the maximum individual and to the regional population resulting from several modes of breaching a reference repository in the year of closure, after 1,000 years, after 100,000 years, and after 100,000,000 years. The release scenarios covered a wide range of consequences from the limited consequences of humans accidentally drilling into a waste package in the repository to the catastrophic release of the repository inventory by a direct meteor strike. Subsequently, the NRC and other federal agencies have expended considerable effort to develop models for the design and for the licensing of a high-level-waste repository, especially for the candidate repository at Yucca Mountain. More meaningful estimates of doses to population may be possible in the future as more is understood about the performance of the proposed Yucca Mountain repository. Such estimates would involve very great uncertainty, especially with respect to cumulative population doses over thousands of years. The standard proposed by the NAS is a limit on maximum individual dose. The relationship of potential new regulatory requirements, based on the NAS report, and cumulative population impacts has not been determined, although the report articulates the view that protection of individuals will adequately protect the population for a repository at Yucca Mountain. However, EPA's generic repository standards in 40 CFR 191 generally provide an indication of the order of magnitude of cumulative risk to population that could result from the licensing of a Yucca Mountain repository, assuming the ultimate standards will be within the range of standards now under consideration. The standards in 40 CFR 191 protects the population by imposing "containment requirements" that limit the cumulative amount of radioactive material released over 10,000 years. The cumulative release limits are based on EPA's population impact goal of 1,000 premature cancer deaths worldwide for a 100,000-metric tonne (MTHM) repository. Nevertheless, despite all the uncertainty surrounding the effects of the disposal of spent fuel and high-level waste, some judgment as to the regulatory NEPA implications of these matters should be made, and it makes no sense to repeat the same judgment in every case. Even taking the uncertainties into account, the Commission concludes that these impacts are acceptable in that these impacts would not be sufficiently large to require the NEPA conclusion, for any plant, that the option of extended operation under 10 CFR 54 should be eliminated. Accordingly, while the Commission has not assigned a single level of significance for the impacts of spent-fuel and high-level-waste disposal, this issue is considered Category 1.

- With respect to the nonradiological impact of the uranium fuel cycle, data concerning land requirements, water requirements, the use of fossil fuel, gaseous effluent, liquid effluent, and tailings solutions and solids, all listed in Table S-3, have been reviewed to determine the significance of the environmental impacts of a power reactor operating an additional 20 years. The nonradiological impacts attributable to the relicensing of an individual power reactor are found to be of small significance. License renewal of an individual plant is so indirectly connected to the operation of fuel-cycle facilities that it is meaningless to address the mitigation of impacts identified above. This is a Category 1 issue.

- The radiological and nonradiological environmental impacts from the transportation of fuel and waste attributable to license renewal of a power reactor have been reviewed. Environmental impact data for transportation are provided in Table S-4. The estimated radiological effects are within the Commission's regulatory standards. Radiological impacts of transportation are therefore found to be of small significance. The nonradiological impacts are those from periodic shipments of fuel and waste by individual trucks or rail cars and thus would result in infrequent and localized minor contributions to traffic density. These nonradiological impacts are found to be small. Programs designed to further reduce risk, which are already in place, provide for adequate mitigation. However,

because a detailed analysis of the environmental impacts of transportation to the proposed repository at Yucca Mountain is not yet available, transportation of fuel and waste is Category 2.

- The radiological and nonradiological environmental impacts from the storage and disposal of low-level radiological waste attributable to license renewal of a power reactor have been reviewed. The comprehensive regulatory controls that are in place and the low public doses being achieved at reactors ensure that the radiological impacts to the environment will remain small during the term of the renewed license. The maximum additional on-site land that may be required for low-level waste storage during the term of a renewed license and associated impacts will be small. Nonradiological environmental impacts on air and water will be negligible. The radiological and nonradiological environmental impacts of long-term disposal of low-level waste from any individual plants at licensed sites are small. The need for the consideration of mitigation alternatives within the context of renewal of a power reactor license has been considered, and the Commission concludes that its regulatory requirements already in place provide adequate mitigation incentives for on-site storage of low-level waste and that for off-site disposal mitigation would be a site-specific consideration in the licensing of each facility. In addition, the Commission concludes that there is reasonable assurance that sufficient low-level waste disposal capacity will be made available when needed for facilities to be decommissioned consistent with NRC decommissioning requirements. Low-level waste is a Category 1 issue.

- The radiological and nonradiological environmental impacts from the storage and disposal of mixed waste attributable to license renewal of a power reactor have been reviewed. The comprehensive regulatory controls and the facilities and procedures that are in place ensure proper handling and storage, as well as negligible doses and exposure to toxic materials for the public and the environment at all plants. License renewal will not increase the small, continuing risk to human health and the environment posed by mixed waste at all plants. The radiological and nonradiological environmental impacts of long-term disposal of mixed waste from any individual plant at licensed sites are small. The maximum additional on-site land that may be required for mixed waste is a small fraction of that needed for low-level waste storage during the term of a renewed license, and associated impacts will be small. Nonradiological environmental impacts on air and water will be negligible. The radiological and nonradiological environmental impacts of long-term disposal of mixed waste from any individual plants at licensed sites are small. The need for the consideration of mitigation alternatives within the context of renewal of a power reactor license has been considered and the Commission concludes that its regulatory requirements already in place provide adequate mitigation incentives for on-site storage of mixed waste and that for off-site disposal mitigation would be a site-specific consideration in the licensing of each facility. In addition, the Commission concludes that there is reasonable assurance that sufficient mixed-waste-disposal capacity will be made available when needed for faculties to be decommissioned consistent with NRC decommissioning requirements. Mixed waste is a Category 1 issue.

- The Commission's waste confidence finding at 10 CFR 51.23 leaves only the on-site storage of spent fuel during the term of plant operation as a high-level waste storage and disposal issue at the time of license renewal. The Commission's regulatory requirements and the experience with on-site storage of spent fuel in fuel pools and dry storage has been reviewed. Within the context of a license renewal review and determination, the Commission finds that there is ample basis to conclude that continued storage of existing spent fuel and storage of spent fuel generated during the license renewal period can be accomplished safely and without significant environmental impacts. Radiological impacts will be well within regulatory limits, thus radiological impacts of on-site storage meet the standard for a conclusion of small impact. The nonradiological environmental impacts have been shown to be not significant; thus they are classified as small. The overall conclusion for on-site storage of spent fuel during the term of a renewed license is that the environmental impacts will be small for each plant. The need for the consideration of mitigation alternatives within the context of renewal of a power reactor license has been considered, and the Commission concludes that its regulatory requirements already in place provide adequate mitigation incentives for on-site storage of spent fuel. On-site storage of spent fuel during the term of a renewed operating license is a Category 1 issue.

- The environmental impacts from the storage and disposal of nonradiological waste attributable to the license renewal of a power reactor have been reviewed. Regulatory and operational trends suggest a gradual decrease in quantifies generated annually and the impacts during the terms of renewed licenses. Facilities and procedures are in place to ensure continued proper handling and disposal at all plants. Consequently, the generation and management of solid nonradioactive waste during the term of a renewed license is anticipated to result in only small impacts to the environment. Because the facilities and procedures that are in place are expected to ensure continued proper handling and disposal at each plant, additional mitigative measures are not a consideration in the context of a license renewal review. Nonradiological waste is a Category 1 issue.

6.7 Endnotes

[**Prev** | **Next** | **Table of Contents**]

1.The expiration dates of the 109 operating reactor licenses are presented in Table 12 of NUREG-1350, Vol 7. Nine expire in the period 2000-2009, 55 in 2010-2019, 43 in 2020-2029, 1 in 2030, and 1 in 2033.

2.The first new LLW sites are forecast in 1997 and 1998 (California, North Carolina, and Texas) and seven in the period 1999-2002.

3.40 CFR 190.10 Standards for normal operations--"Operations covered by this Subpart shall be conducted in such a manner as to provide reasonable assurance that:

(a)The annual dose equivalent does not exceed 25 millirems to the whole body, 75 millirems to the thyroid, and 25 millirems to any other organ of any member of the public as the result of exposures to planned discharges of radioactive materials, radon and its daughters excepted, to the general environment from uranium fuel cycle operations and to radiation from these operations.

(b)The total quantity of radioactive materials entering the general environment from the entire uranium fuel cycle, per gigawatt-year of electrical energy produced by the fuel cycle, contains less than 50,000 curies of krypton-85, 5 millicuries of iodine-129, and 0.5 millicuries combined of plutonium-239 and other alpha-emitting transuranic radionuclides with half-lives greater than one year."

6.8 References

[**Prev** | **Next** | **Table of Contents**]

AIF/NESP-032, *The Environmental Consequences of Higher Fuel Burn-up*, prepared by Envirosphere Co. and Babcock and Wilcox, Inc., Bethesda, Md. for the National Environmental Studies Project of the Atomic Industrial Forum, Inc., June 1985.

Anderson, R. T., *Nuclear Transportation Studies Related to Use of Barnwell Nuclear Fuel Plant*, prepared by Allied-General Nuclear Services, Barnwell, S.C., for the U.S. Department of Energy, November 1981.

ANS/ANSI 57.9, *Design Criteria for an Independent Spent Fuel Storage Installation (Dry Type)*, American Nuclear Society, LaGrange Park, Ill., 1992.

Asselstine, J. K., "A Regulatory Perspective on Future Management of Low-Level Radioactive Waste," pp. 1-7 in *Low-Level Radioactive Waste Management: The Next Five Years--Transition to Stability or Continued Uncertainty*, E. L. Helminski Publishers, Inc., Washington, D.C., 1985.

Bailey, W. J., "Experience with Failed or Damaged Spent Fuel and Its Impacts on Handling," *J. Nucl. Mater. Manage.*, **18**(3), 30-33, May 1990.

Bartlett, J., "Plenary Session Address by the Director of the Office of Civilian Radioactive Waste Management, U.S. Department of Energy," *Proceedings of the Institute for Nuclear Materials Management, 31st Annual Meeting, Los Angeles, California, July 15-19, 1990*.

Coley, R. F., "Low-Level Radioactive Waste Generation Rates at Domestic Nuclear Power Plants--1982 through 1985 Update," *Proceedings of the Symposium on Waste Management, Tucson, Arizona, Mar. 1-5, 1987*, Vol. 3, University of Arizona Press, Tucson, Ariz., 1987.

Council on Environmental Quality, *7th Annual Report*, Washington, D.C., 1976.

de Planque, E. G., "Do You Know Where Your Low-Level Waste Is? (Or Desperately Seeking Disposal)," Tenth Annual Radioactive Exchange, Low-Level Radioactive Waste Management Decisionmakers' Forum, Amelia Island Plantation, Jacksonville, Florida, June 14, 1994.

DOE/EIA-0478(94), *Uranium Industry Annual 1994*, U.S. Department of Energy, Washington, D.C., July 1995.

DOE/EIS-0046F, *Final Environmental Statement: Management of Commercially Generated Radioactive Waste*, U.S. Department of Energy, Washington, D.C., October 1980.

DOE/EM-0143P, *1992 Annual Report on Low-Level Radioactive Waste Management Progress, Report to Congress in Response to Public Law 99-240*, U.S. Department of Energy, Office of Environmental Restoration and Waste Management, November 1993.

DOE/LLW-114, *Greater-Than-Class C Low-Level Radioactive Waste Characterization, Estimated Volumes, Radionuclide Activities, and Other Characteristics*, U.S. Department of Energy, Washington, D.C., July 1994.

DOE/LLW-180, *Analysis of the Legal, Regulatory, and Technical Issues Associated with DOE Accepting Commercial Mixed Waste, National Low-Level Waste Management Program*, U.S. Department of Energy, Washington, D.C., July 1993.

DOE/LLW-181, *The 1992 State-by-State Assessment of Low-Level Radioactive Wastes Received at Commercial Disposal Sites: National Low-Level Waste Management Program*, U.S. Department of Energy Washington, D.C., September 1993.

DOE/RW-0006, *Integrated Data Base for 1994: Spent Fuel and Radioactive Waste Inventories, Projections, and Characteristics*, Rev. 9, U.S. Department of Energy, Washington, D.C., March 1994.

DOE/RW-0065, *Transporting Spent Nuclear Fuel: An Overview*, U.S. Department of Energy, Office of Civilian Radioactive Waste Management, Washington, D.C., March 1986.

DOE/RW-0187, *Draft 1988 Mission Plan Amendment*, U.S. Department of Energy, Office of Civilian Radioactive Waste Management, Washington, D.C., 1988.

DOE/RW-0220, *Final Version Dry Cask Storage Study*, U.S. Department of Energy, Office of Civilian Radioactive Waste Management, Washington, D.C., February 1989.

DOE/RW-0307P-6, *Progress Report on the Scientific Investigation Program for the Nevada Yucca Mountain Site*, No. 6, U.S. Department of Energy, Office of Civilian Radioactive Waste Management, No. 6, Washington, D.C., September 1992.

Efremenkov, V. M., "Radioactive Waste Management at Nuclear Power Plants," *IAEA Bull*. **31**(4), 37-42, 1989.

EPRI NP-3763, *Long-Term, Low-Level Radwaste Volume Reduction Strategies, Volume 1: Executive Summary, Final Report*, Research Projects 1557-11, 1557-12, and 1557-13, Electric Power Research Institute, Palo Alto, Calif., November 1984.

EPRI NP-3765, *Surveillance of LWR Spent Fuel in Wet Storage, Final Report*, Project 2062-11, Electric Power Research Institute, Palo Alto, Calif., October 1984.

EPRI NP-5526, *Radwaste Generation Survey Update, Volume 1: Boiling Water Reactors, Final Report*, Project 1557-26, Electric Power Research Institute, Palo Alto, Calif., February 1988.

EPRI NP-5526 *Radwaste Generation Survey Update, Volume 2: Pressurized Water Reactors, Final Report*, Project 1557-26, Electric Power Research Institute, Palo Alto, Calif., February 1988.

EPRI NP-5933, "Update on 1985 and Future Transportation Issues," pp. 6-3 through 6-14 in *Proceedings: 1986 EPRI Radwaste Workshop*, Project 1557-14, Electric Power Research Institute, Palo Alto, Calif., October 1986.

EPRI NP-5934, *Proceedings: 1987 EPRI Radwaste Workshop*, Project 1557-14, Electric Power Research Institute, Palo Alto, Calif., October 1988.

EPRI NP-5983, *Assessing the Impact of NRC Regulation 10 CFR 61 on the Nuclear Industry, Final Report*, Project 2412-6, Electric Power Research Institute, Palo Alto, Calif., August 1988.

EPRI NP-6163, *On-Site Storage of Low-Level Radioactive Waste at Power Reactors: An International Scoping Study, Final Report*, Project 2724-3, Electric Power Research Institute, Palo Alto, Calif., December 1988.

EPRI/NP-7386, *Radwaste Desk Reference, Volume 2, Transportation and Disposal*, Electric Resources Research Institute, Palo Alto, Calif., July 1992.

EPRI/TR-100298, *Interim On-Site Storage of Low Level Waste, Volume 1, Licensing and Regulatory Issues*, Electric Resources Research Institute, Palo Alto, Calif., May 1992.

EPRI/TR-101160, *Low-Level Radioactive Waste Processing at Nuclear Power Plants, Volume 1, Solid Radwaste Sourcebook*, Electric Power Research Institute, Palo Alto, Calif., December 1992.

EPRI/TR-101160, *Low-Level Radioactive Waste Processing at Nuclear Power Plants, Volume 2, PWR Liquid Radwaste Sourcebook*, Electric Power Research Institute, Palo Alto, Calif., December 1992.

EPRI/TR-101160, *Low Level Radioactive Waste Processing at Nuclear Power Plants, Volume 3, BWR Liquid Radwaste Sourcebook*, Electric Power Research Institute, Palo Alto, Calif., December 1992.

Fisher, M. W., "Dry Rod Consolidation Advancements in the OCRWM Programs," *J. Inst. Nucl. Mater. Manage.*, **16** (3), 15-18, April 1988.

GAO/RCED-90-103, *Nuclear Waste Quarterly Report as of September 30, 1989*, U.S. General Accounting Office, Washington, D.C., March 1990.

GAO/RCED-91-194, *Operation of Monitored Retrievable Facility Is Unlikely by 1998*, U.S. General Accounting Office, Washington, D.C., September 1991.

Garcia, Russ, *Trends in Waste Minimization*, National Low-Level Waste Management Program, EG&G Idaho, Inc., Idaho Falls, Id., June 25, 1992.

Gerstberger, C., Jr., "Westinghouse At-Reactor Consolidation Program," *J. Nucl. Materials Manage.*, **15**(3), 30-31, April 1987.

Gilbert, E. R., et al., "Advances in Technology for Storing Light Water Reactor Spent Fuel," *Nucl. Technol.*, **89**, 141-61, February 1990.

GJO-100(78), *Statistical Data of the Uranium Industry*, U.S. Department of Energy, Grand Junction Office, January 1978, available from the U.S. Geological Survey, Denver.

Godlewski, N. Z., "Spent Fuel Storage: An Update," *Nucl. News*, **30**(3), 47-52, March 1987.

Hutchison, D., and M. T. Magleby, "Greater than Class C Waste Characterization Technical Review Process," Proceedings of the Institute for Nuclear Materials Management, 31st Annual Meeting, Los Angeles, Calif., July 15-19, 1990.

INPO (Institute of Nuclear Power Operations), *1993 Performance Indications for the U.S. Nuclear Utility Industry*, Institute of Nuclear Power Operations, Atlanta, Ga., March 1994.

Johnson, E. R., *Trip Report--Attendance at IAEA Technical Committee Meeting on Methods for Expanding Spent Fuel Storage Facilities*, E. R. Johnson Associates, Oak Ridge, Tenn., July 3, 1989.

Levin, G., "Low-Level Radioactive Waste Management in the U.S.: A Proving Ground," *Nucl. News*, **24**(8), August 1981.

Lubin, J. H., et al., "Lung Cancer in Radon-Exposed Miners and Estimation of Risk From Indoor Exposure," *J. Natl. Cancer Inst.*, (**87**)11, June 7, 1995.

L-S/488364, *Policy Statement on the Extension of the Policy on the Enforcement of RCRA Section 3004 (J) Storage Prohibition at Facilities Generating Mixed Radioactive Hazardous Waste*, Federal Register Official Summary, 59 *FR* 18813, Apr. 20, 1994.

Macbeth, P. J., and J. R. Allen, "Radwaste Experience at WNP-2--The First Two Years," *Proceedings of the Symposium on Waste Management, Tucson, Arizona, 1986*, Vol. 3, University of Arizona Press, Tucson, Ariz., 1986.

McRae, W. T., "Onsite LLW Storage at Cook," *Nucl. News*, March 1994.

Minnesota EQB (Environmental Quality Board), *Final Environmental Impact Statement, Prairie Island Independent Spent Fuel Storage Installation*, Apr. 12, 1991.

Mullen, C. K., et al., "Dry Rod Consolidation Technology Project Results," *Proceedings of the Symposium on Waste Management, Tucson, Arizona, 1988*, Vol. 2, University of Arizona Press, Tucson, Ariz., 1988.

NAS (National Academy of Sciences), *Technical Bases for Yucca Mountain Standards*, National Research Council, Washington, D.C., August 1995.

NCRP Report No. 94, *Exposure of the Population in the United States and Canada from Natural Background Radiation*, Dec. 30, 1987.

Newberry, W. F., and J. A. Coleman, "Plans for Managing Greater-than-Class C Waste," pp. 615-616 in Proceedings of the Institute for Nuclear Materials Management, 31st Annual Meeting, Los Angeles, July 15-19, 1990.

NRC (U.S. Nuclear Regulatory Commission) Docket No. 72-2 (50-280 and 281), *Virginia Electric and Power Company; Issuance of Environmental Assessment and Finding of No Significant Impact for the Surry Dry Cask Independent Spent Fuel Storage Installation*, Apr. 18, 1985.

NRC, Commission on Physical Sciences, Mathematics, and Resources, Board on Radioactive Waste Management, Uranium Mill Tailings Study Panel, *Scientific Basis for Risk Assessment and Management of Uranium Mill Tailings*, Washington, D.C., 1986.

NRC, Inspection Procedure 83822, "Radiation Protection," Mar. 7, 1994; Inspection Procedure 88035, "Radioactive Waste Management," May 23, 1984; Inspection Procedure 88045, "Environmental Protection," May 23, 1984, U.S. Nuclear Regulatory Commission, Washington, D.C.

NRC, "Providing Guidance on Storage of Low-Level Radwaste at Power Reactor Sites," Generic Letter 81-38, U.S. Nuclear Regulatory Commission, Washington, D.C., Nov. 10, 1981.

Nuclear Waste News, **14**(17), Apr. 28, 1994, p. 162.

NUREG-0002, *Final Generic Environmental Statement on the Use of Recycled Plutonium in Mixed Oxide Fuel in Light Water Cooled Reactors*, U.S. Nuclear Regulatory Commission, Washington, D.C., August 1996.

NUREG-0020, *Licensed Operating Reactors Status Summary Report Data as of December 31, 1988*, U.S. Nuclear Regulatory Commission, Washington, D.C., January 1989.

NUREG-75/038, *Supplement 1 to WASH-1238, Environmental Survey of Transportation of Radioactive Materials to and from Nuclear Power Plants*, U.S. Nuclear Regulatory Commission, Washington, D.C., April 1975.

NUREG-0116, *Supplement 1 to WASH-1248, Environmental Survey of the Reprocessing and Waste Management Portions of the LWR Fuel Cycle*, U.S. Nuclear Regulatory Commission, Washington, D.C., October 1976.

NUREG-0170, *Final Environmental Impact Statement on the Transportation of Radioactive Material by Air and Other Modes*, Vols. 1 and 2, U.S. Nuclear Regulatory Commission, Office of Standards Development, Washington, D.C., December 1977.

NUREG-0216, *Supplement 2 to WASH-1248, Environmental Survey of the Reprocessing and Waste Management Portions of the LWR Fuel Cycle*, U.S. Nuclear Regulatory Commission, Washington, D.C., March 1977.

NUREG-0575, *Generic Environmental Impact Statement on Handling and Storage of Spent Light Water Power Reactor Fuel*, Vols. 1-3, U.S. Nuclear Regulatory Commission, Washington, D.C., August 1979.

NUREG-0945, *Licensing Requirements for Land Disposal of Radioactive Waste, Final Environmental Impact Statement on 10 CFR Part 61*, U.S. Nuclear Regulatory Commission, Office of Nuclear Material Safety and Safeguards, Washington, D.C., November 1982.UREG-1092, *Environment Assessment for 10 CFR Part 72 "Requirements for the Independent Storage of Spent Fuel and High-Level Radioactive Waste,"* U.S. Nuclear Regulatory Commission, Washington, D.C., August 1984.

NUREG-1179, *Rupture of Model 48Y UF_6 Cylinder and Release of Uranium Hexafluoride*, Vol. 1, February 1986 and Vol. 2, June 1986, U.S. Nuclear Regulatory Commission, Washington, D.C.

NUREG/BR-0111, *Transporting Spent Fuel: Protection Provided Against Severe Highway and Railroad Accidents*, U.S. Nuclear Regulatory Commission, Washington, D.C., March 1987.

NUREG/CR-2907, *Radioactive Materials Released from Nuclear Power Plants, Annual Report for 1990*, U.S. Nuclear Regulatory Commission, Washington, D.C., October 1993.

NUREG/CR-4214, *Health Effects Models for Nuclear Power Plant Accident Consequence Analysis*, Rev. 1, Pt. II, U.S. Nuclear Regulatory Commission, Washington, D.C., August 1991.

NUREG/CR-4829, UCID-20733, *Shipping Container Response to Severe Highway and Railway Accident Conditions*, Lawrence Livermore National Laboratory, Livermore, Calif., February 1987.

NUREG/CR-5009, PNL-6258, *Assessment of the Use of Extended Burnup Fuel in Light Water Power Reactors*, Pacific Northwest Laboratory, Richland, Wash., February 1988.

NUREG/CR 5938/ORNL-6731, *National Profile on Commercially Generated Low-Level Radioactive Mixed Waste*, Oak Ridge National Laboratory, Oak Ridge, Tenn., December 1992.

NWTRB (Nuclear Waste Technical Review Board), *Special Report to Congress and the Secretary of Energy*, Nuclear Waste Technical Review Board, Arlington, Va., March 1993.

ORNL/TM-9563, *Transportation of Radioactive and Hazardous Materials: A Summary of State and Local Legislative Requirements for the Period Ending December 31, 1984*, Oak Ridge National Laboratory, Oak Ridge, Tenn., 1984.

ORNL/TM-9780/V3, I. Spiewak, "Nuclear Waste Transportation and Disposal," pp. 6-1 through 6-4 in *Nuclear Power Options Viability Study: Volume III, Nuclear Discipline Topics*, Oak Ridge National Laboratory, Oak Ridge, Tenn., 1986.

O'Sullivan, R. A., "International Consensus for the Safe Transport of Radioactive Material: An Experience to Imitate," *IAEA Bull.*, **30**(3), 31-34, 1988.

OTA-O-426, *Partnerships Under Pressure: Managing Commercial Low-Level Radioactive Waste*, Office of Technology Assessment, U.S. Congress, Washington, D.C., 1989.

OTA-SET-304, *Transportation of Hazardous Materials*, Office of Technology Assessment, U.S. Congress, Washington, D.C., July 1986.

Parker, F. L., "Status and Projected Activities of the Monitored Retrievable Storage Commission," *J. Inst. Nucl. Mater. Manage.*, **17**(3), 14-16, April 1989.

Pub. L. 93-633, *Hazardous Materials Transportation Act of 1977*.

Pub. L. 94-580, *The Resource Conservation and Recovery Act of 1976*.

Pub. L. 96-573, *Low-Level Radioactive Waste Policy Act of 1980*.

Pub. L. 97-425, *The Nuclear Waste Policy Act of 1982*.

Pub. L. 99-240, *Low-Level Radioactive Waste Policy Amendments Act of 1985*.

Pub. L. 100-123, *1987 Nuclear Waste Amendments to the NWPA of 1982*.

Radioactive Exchange, "California Says US Ecology LLRW Disposal Facility License Complete," **8**(22), 1, Dec. 25, 1989.

Riales, L. J., "Low-Level Radioactive Waste Management at Tennessee Valley Authority," in *Low-Level Radioactive Waste Management: The Next Five Years--Transition to Stability or Continued Uncertainty*, E. L. Helminski Publishers Inc., Washington, D.C., 1985.

Roberts, J. P., "Dry Spent Fuel Storage--Licensing Update," *J. Nucl. Mater. Manage.*, **15**(3), 32-35, April 1987.

Rogers and Associates Engineering Corporation, *The Management of Mixed Low-Level Radioactive Waste in the Nuclear Power Industry*, National Environmental Studies Project, Nuclear Management and Resources Council, Washington, D.C., January 1990.

SCCLLRWM (Southeast Compact Commission for Low-Level Radioactive Waste Management), *1992 Summary of Low-Level Radioactive Waste Management in the Southeast Compact*, Southeast Compact Commission, Raleigh, N.C., March 1994.

SCCTAC (Southeast Compact Commission Technical Advisory Committee), *1992 Summary of Low-Level Radioactive Waste Management in the Southeast Compact*, March 1994.

Schneider, K. J., S. J. Mitchell, and A. B. Johnson, "International Status of Dry Storage of Spent Fuel," in *Proceedings, American Nuclear Society, International High-Level Radioactive Waste Management*, April 1992.

SEA/93-461-10-A:3, *Draft Report (without Attachments), GEIS Appendix B, Definition of Impact Drivers for Nuclear Plant License Renewal Generic Environmental Impact Study*, Science and Engineering Associates, Inc., for the U.S. Nuclear Regulatory Commission, Washington, D.C., revised April 1993.

SECY-94-198, *Review of Existing Guidance Concerning the Extended Storage of Low-Level Radioactive Waste*, U.S. Nuclear Regulatory Commission, Washington, D.C., Aug. 1, 1994.

Shaw, R. A., "Low-Level Radioactive Wastes in the Nuclear Power Industry," pp. 119-40 in *Low-Level Radioactive Waste Regulation: Science, Politics, and Fear*, Lewis Publishers, Inc., Chelsea, Mich., 1988.

Smith, T. P., *A Planners Guide to Low-Level Radioactive Waste Disposal*, American Planning Association, Chicago, July 1982, p. 369.

Souza, Marques de-J.A. and L.L. Bennett, "Nuclear Power for Environmental Protection," in *Proceedings of the 14th World Energy Conference (Sept. 17-22, 1989)*, Energy, Mines, and Resources Canada, September 1989.

Sprecher, W. M., "Federal Agencies Involved in the Implementation of the Nuclear Waste Policy Act of 1982, As Amended," pp. 275-278 in *Proceedings of the Institute for Nuclear Materials Management, 31st Annual Meeting, Los Angeles, California, July 15-19, 1990*.

SR/CNEAF/94-01, *Spent Nuclear Fuel Discharges from U.S. Reactors 1992*, Energy Information Administration, U.S. Department of Energy, Washington, D.C., May 1994.

Strauss, S. D., "How Utilities Respond to Radwaste Needs," *Power*, **131**(8), 13-16, August 1987.

Taylor, G. M., "Volume Reduction: Utilities Caught in the Squeeze," *Nucl. News*, **30**(3), 66-70, March 1987.

Trinoskey, P. A., G. W. Murphy, and L. A. Wells, "Limerick Generating Station Compliance with Regulatory Requirements Governing the Classification of Low-Level Radioactive Waste," *Proceedings of the Symposium on Waste Management, Tucson, Arizona, March 1-5, 1987*, Vol. 3, University of Arizona Press, Tucson, Ariz., 1987.

U.S. Department of Energy, *Monitored Retrievable Storage Submission to Congress, Volume III, MRS Program Plan*, U.S. Department of Energy, Washington, D.C., March 1987.

U.S. Department of Energy, *Transporting Radioactive Materials: Answers to Your Questions*, U.S. Department of Energy, Washington, D.C., August 1989.

Wakeman, B. H., "Metal Cask Storage at Virginia Power," *J. Inst. Nucl. Mater. Manage.*, **17**(3), 25-27, April 1989.

WASH-1238, *Environmental Survey of Transportation of Radioactive Materials to and from Nuclear Power Plants*, U.S. Atomic Energy Commission, Washington, D.C., December 1972.

WASH-1248, *Environmental Survey of the Uranium Fuel Cycle*, U.S. Atomic Energy Commission, Washington, D.C., April 1974.

Zacha, N. J., "Fuel Rod Consolidation: The Status Today," *Nucl. News*, **31**(3), 68-72, March 1988.

Page Last Reviewed/Updated Tuesday, March 22, 2011

©2000- 2011 NRC

Generic Environmental Impact Statement for License Renewal of Nuclear Plants (NUREG-1437 Vol. 1)

7. Decommissioning

[**Prev** | **Next** | **Table of Contents**]

7.1 Introduction

[**Prev** | **Next** | **Table of Contents**]

Decommissioning is defined as the safe removal of a nuclear facility from service and the reduction of residual radioactivity to a level that permits release of the property for unrestricted use and termination of the license (10 CFR Part 50.82). Decommissioning must occur because a licensee is not permitted to abandon a facility after ceasing operation. Decommissioning activities do not include the removal of spent fuel, which is considered to be an operational activity; the storage of spent fuel, which is addressed in the Waste Confidence Rule (10 CFR Part 51.23); or the removal and disposal of nonradioactive structures and materials beyond that necessary to terminate the U.S. Nuclear Regulatory Commission (NRC) license. Disposal of the nonradioactive hazardous waste that is not necessary for NRC license termination is not considered part of the decommissioning process for which NRC is responsible.

The purpose of this chapter is to determine whether license renewal of nuclear power plants would change the impacts of decommissioning to such an extent that those impacts would need to be assessed and mitigative measures considered as part of the environmental review for license renewal. Current licenses allow nuclear power plants to operate for as long as 40 years. License renewal would extend the period of operation by as much as 20 years. This chapter addresses incremental impacts of decommissioning after a 20-year license renewal compared with operating for 40 years.

The following potential impacts are addressed: radiation exposures to workers and the public, socioeconomic effects, waste management impacts, air and water quality impacts, and ecological impacts. The principal impacts of decommissioning are expected to result from radiation exposures to workers and from disposal of radioactive materials. Decommissioning is expected to have only minor radiological impacts on the public (primarily as a result of transporting radioactive waste). Socioeconomic impacts of decommissioning would result from the demands on, and contributions to, the community by the workers employed to decommission a power plant. As shown in this chapter, the air quality, water quality, and ecological impacts of decommissioning are all expected to be substantially smaller than those of power plant construction or operation because the level of activity and the releases to the environment are all expected to be smaller during decommissioning than during construction and operation. The effect of license renewal on the costs of decommissioning are also examined because the costs of decommissioning continues to be a public concern; however, no category conclusion is reached because the impact of license renewal on decommissioning cost is not a consideration in the environmental review and the decision to renew a license.

The impacts resulting from decommissioning at 40 years (baseline) are taken from NUREG-0586, the two source documents NUREG/CR-0130 and NUREG/CR-0672, and updates to those source documents such as draft reports NUREG/CR-5884 and NUREG/CR-6174. The same methods used in those documents were used to project the impacts of decommissioning after 60 years of operation. Where the source documents did not address a potential impact, other available data and staff members' professional judgments were used to assess the potential for impacts to change as a result of extended operation. The analysis in this chapter is based on large "reference" pressurized-water reactor (PWR) and boiling-water reactor (BWR) nuclear power plants; consequently, the impacts of decommissioning all U.S. nuclear power plants that reach the end of their operating lives without a serious accident should be encompassed by those described here. The changes in impacts resulting from the extended operation and in the environment at the time of decommissioning were considered. [The discussion is built around a "reference" PWR identified by NUREG/CR-0130, the 1175-MW Trojan Nuclear Plant at Rainier, Oregon, and a "reference" BWR, the 1155-MW(e) Washington Public Power Supply System Nuclear Project 2, which was being built near Richland, Washington (NUREG/CR-0672).]

7.2 The Decommissioning Process

[**Prev** | **Next** | **Table of Contents**]

This section describes the locations of radioactive materials in nuclear power plants, notes the three commonly discussed decommissioning methods, summarizes experience to date with decommissioning nuclear power plants, and provides information on the wastes generated during decommissioning. Except as noted, the information for this section is from NUREG-0586.

7.2.1 Nuclear Power Plants

Nuclear power plants in the United States use two types of nuclear reactors (Chapter 2); the most common type is the PWR. Most of the 118 licensed power reactors in the United States are PWRs. The other type is the BWR. The locations of radioactive components in these two types of power plants are described briefly to aid the reader's understanding of decommissioning.

7.2.1.1 Pressurized-Water Reactors

Buildings or structures associated with a typical large PWR (Figure 7.1) include (1) the heavily reinforced concrete containment building, which houses the pressure vessel, the steam generators, and the pressurizer system; (2) the turbine building, which contains the turbines and the generator; (3) the cooling water system, which may include the cooling tower and other components; (4) the fuel building, which contains fresh and spent fuel, fuel handling facilities, the spent-fuel storage pool and its cooling system, and the solid radioactive waste system; (5) the auxiliary building, which contains the liquid radioactive waste treatment systems, the filter and ion exchanger vaults, the gaseous radioactive waste treatment system, and the ventilation systems for the containment, fuel, and auxiliary buildings; (6) the control building, which houses the reactor control room and personnel facilities; (7) water intake structures; (8) the administration building; and (9) other structures such as warehouses and nonradioactive shops.

The major radioactive components encountered in decommissioning are associated with the reactor itself--the primary coolant loop, the steam generators, the radioactive waste handling systems, and the concrete biological shield that surrounds the pressure vessel. The reactor core, pressure vessel, steam generators, and piping between the reactor and steam generators are highly radioactive. Because some primary-to-secondary leakage is

Figure 7.1 Typical pressurized-water reactor generating station layout. Adapted from NUREG/CR-0130.

impossible to avoid, the secondary loop, including the turbines, is slightly contaminated. Because of leakage and blowdown, the cooling water is very slightly contaminated. Much equipment in the auxiliary building is contaminated, as is the spent-fuel storage pool and its associated equipment.

7.2.1.2 Boiling-Water Reactors

Buildings and structures associated with a typical large BWR (Figure 7.2) include (1) the reactor building, which houses the reactor pressure vessel, the containment structure, the biological shield, the spent-fuel pool, and fuel handling equipment; (2) the turbine building, which houses the

Figure 7.2 Site layout on a typical boiling-water reactor power plant. Adapted from NUREG-0672.

turbine and electric generator; (3) the radioactive waste and control building, which houses the solid, liquid, and gaseous radioactive waste treatment systems and the main control room; (4) the cooling system; (5) water intake structures and pump houses; (6) the service building, which houses the makeup water treatment system, machine shops, and offices; and (7) other minor structures.

The major sources of radiation in decommissioning a BWR are associated with the reactor itself, the containment structure, the concrete biological shield, the primary coolant loop, the turbines, and the radioactive waste handling systems. The reactor building, the turbine generator building, and the radioactive waste building are the only buildings containing radioactive materials. The reactor core and its pressure vessel are highly contaminated, as is the piping to the turbines. The turbines are also contaminated, but the cooling towers and associated piping are not. Much equipment in the radioactive waste building is contaminated, as is the spent-fuel pool in the reactor building.

7.2.2 Decommissioning Methods

In the NRC's original decommissioning studies (NUREG/CR-0130 for PWRs and NUREG/CR-0672 for BWRs), three alternatives were defined: DECON (decontamination/dismantlement as rapidly after reactor shutdown as possible to achieve termination of the nuclear license); SAFSTOR (a period of safe storage of the stabilized and defueled facility followed by final decontamination/dismantlement and license termination); and ENTOMB (immediate removal of the highly activated reactor vessel internals for disposal and relocation of the remainder of the radioactively contaminated materials to the reactor containment building, which is then sealed. With sufficient time, the radioactivity on the entombed materials will have decayed to levels that permit termination of the nuclear license). However, because current regulations require decommissioning to be complete within 60 years, ENTOMB may not be a viable option.

Changes in the industrial and regulatory situation in the United States since the late 1970s have forced revisions to the scenarios of the NRC's original decommissioning alternatives. The most recently revised decommissioning scenarios are described for PWRs in NUREG/CR-5884 and for BWRs in NUREG/CR-6174. There are two principal changes in the revised scenarios. One is the delay of major decommissioning actions for at least 5 to 7 years following reactor shutdown because of a Department of Energy (DOE) requirement to cool the spent fuel in the reactor pool to avoid cladding failures in dry storage. The other is the assumption that decommissioning will be complete within 60 years, as required by current regulations. This delay results in an increase in decommissioning costs during the short safe storage period while the spent fuel pool continues to operate. Changes in cumulative occupational radiation doses also result from the decommissioning scenario changes.

The basic concept of the three alternatives remains unchanged. However, because of the accumulated inventory of spent fuel in the reactor storage pool and the requirement for at least 5 years of storage for the spent fuel before transfer to DOE for disposal, the timing and steps in the process for each alternative have been adjusted to reflect present conditions and possibilities. For the DECON alternative, it is assumed that the owner has strong incentives to decontaminate and dismantle the retired reactor facility as promptly as possible [i.e., future availability and cost of low-level radioactive waste (LLW) disposal and the need to reuse or dispose of the site, necessitating transfer of the stored spent fuel from the pool to a dry storage facility on the reactor site]. Although continued storage of spent fuel in the pool would be acceptable, the modified Part 50 license could not be terminated until the pool was emptied. It is also assumed that an acceptable dry transfer system would be available to remove the spent fuel from the dry storage facility and place it into licensed transport casks when the time came for DOE to accept the spent fuel for disposal. Similar

assumptions are made for the SAFSTOR and ENTOMB alternatives for convenience of analysis, even though extended use of the spent fuel pool might be more cost-effective for SAFSTOR.

7.2.2.1 DECON

DECON is the decommissioning method in which the equipment, structures, and portions of the facility and site containing radioactive contaminants are removed or decontaminated to a level that permits the property to be released for unrestricted use shortly after cessation of operations. It is the only decommissioning alternative that leads to termination of the facility license and release of the facility and site for unrestricted use shortly after cessation of facility operations. DECON activities are expected to require about 9 years for large light-water reactors; less time should be required for smaller facilities.

Because DECON operations are expected to be completed within a few years following shutdown, radiation exposures to workers generally are higher than for decommissioning methods that allow for radioactive decay by delaying or extending the work over a longer period. DECON also requires larger commitments of money and commercial waste disposal site space than do other decommissioning methods. The principal advantage of DECON is that the site is available for unrestricted use promptly.

Nonradioactive equipment and structures need not be dismantled or removed for termination of the NRC license and release for unrestricted use. Once the facility's radioactive structures are decontaminated to levels permitting unrestricted use of the facility, nonradioactive facilities may either be put to some other use or demolished at the owner's discretion. [NRC has issued proposed amendments to 10 CFR Part 20 containing radiological criteria for decommissioning of NRC-licensed nuclear facilities (FR 59, 43200, August 22, 1994). Currently, NRC uses, on a case-by-case basis, criteria and practices contained in Regulatory Guide 1.86 and in a letter to Stanford University from J. Miller, Office of Nuclear Reactor Regulation, NRC, dated April 21, 1982.]

DECON, as defined by NUREG/CR-5884 and NUREG/CR-6174, comprises four distinct periods of effort: (1) preshutdown planning/engineering and regulatory reviews, (2) plant deactivation and preparation for storage (no dismantling activities are conducted during this period that would affect the safe operation of the spent fuel pool), (3) plant safe storage with concurrent operations in the spent-fuel pool until the pool inventory is zero, and (4) decontamination and dismantlement of the radioactive portions of the plant, leading to license termination. Because of the delays in development of the federal waste management system, it may be necessary to continue operation of a dry fuel storage facility on the reactor site after the reactor systems have been dismantled and the reactor nuclear license terminated. However, these latter storage costs are considered operations costs under 10 CFR 50.54(b)(b) and are not considered part of decommissioning.

7.2.2.2 SAFSTOR

SAFSTOR is the decommissioning method in which the nuclear facility is placed and maintained in a condition that allows the safe storage of radioactive components of the nuclear plant and subsequent decontamination to levels that permit release for unrestricted use. SAFSTOR was initially conceived of as having three successive stages: (1) a short period of preparation for safe storage (expected to be up to 2 years after final reactor shutdown); (2) a variable safe storage period of continuing care consisting of security, surveillance, and maintenance during which much of the reactor's radioactivity decays; and finally, (3) a relatively short period of decontamination (NUREG-0586). In NUREG/CR-5884 and NUREG/CR-6174, SAFSTOR is described as five distinct periods of effort, with the initial three periods identical to those of DECON. The fourth period is extended safe storage (50 years) with no fuel in the reactor storage pool, and the fifth period is decontamination and dismantlement of the radioactive portions of the plant.

The radioactive or contaminated material must be decontaminated or removed, packaged, and disposed of at a regulated disposal facility. After it has been determined that residual radioactivity is at acceptable levels, the license will be

terminated and the facility can be released for unrestricted use. After termination of the NRC license, disassembly or demolition of nonradioactive facilities would be performed at the owner's discretion.

SAFSTOR may be used as a means of satisfying requirements for protection of the public while minimizing the initial commitments of time, money, radiation exposure, and waste disposal capacity. SAFSTOR may also have some advantage where there are other operational nuclear facilities at the same site or where a shortage of radioactive waste disposal capacity occurs. The disadvantages of SAFSTOR are that the site is unavailable for other uses for an extended time; maintenance, security, and surveillance are required until the final decontamination is complete; and few, if any, personnel familiar with the facility are available at the time of decontamination (up to 60 years after plant shutdown).

7.2.2.3 ENTOMB

ENTOMB is the alternative in which radioactive contaminants are encased in a long-lasting material, such as concrete. The entombed structure is maintained and surveillance is performed until the radioactivity decays to a level permitting release of the property for unrestricted use. ENTOMB also comprises five distinct periods of effort, with the initial three periods identical to those of DECON (NUREG/CR-5884 and NUREG/CR-6174). The fourth period is preparation for entombment, when all of the radioactive materials are consolidated within the containment building and entombed. The fifth period is entombed storage for an extended time, between 60 and 300 years.

ENTOMB is intended for use where the residual radioactivity will decay to levels permitting unrestricted release of the facility within reasonable time periods (100 years). However, a few radioactive isotopes produced in nuclear reactors have long half-life periods (Section 7.3.1) that prevent the release of the facilities for unrestricted use within the foreseeable lifetime of any man-made structure. ENTOMB would be a viable alternative only for facilities where radioactive isotopes would be expected to decay to safe levels within the expected lifetime of the entombment structure. This condition likely would not pertain to nuclear power reactors. In addition, the use of the ENTOMB alternative contributes to problems associated with increased numbers of sites dedicated to "interim" storage of radioactive materials for long periods of time.

7.2.3 Decommissioning Experience

U.S. commercial nuclear power reactors that have been shut down through 1992 are listed in Table 7.1. An additional 24 reactors have been or are being decommissioned in France, West Germany, Canada, the United Kingdom, Sweden, and Japan (Gaunt et al. 1990).

7.2.4 Inventory and Disposition of Radioactive Materials

Table 7.1 U.S. commercial nuclear power reactors formerly licensed to operate

Unit/location	Construction type[a]/MW(t)	Operating license issued/shut down	Decommissioning alternative selected/current status
Bonus[b]	BWR/50	04/02/64	ENTOMB
Punta Higuera, PR		06/01/68	ENTOMB
Carolina Virginia Tube Reactor[c]	PTHW/65	11/27/62	SAFSTOR
Parr, SC		01/01/67	SAFSTOR
Dresden 1	BWR/700	09/28/59	SAFSTOR
Morris, IL		10/31/78	SAFSTOR
Elk River[b]	BWR/58	11/06/62	DECON
Elk River, MN		02/01/68	DECON completed
Fermi 1	SCF/200	05/10/63	SAFSTOR
Lagoona Beach, MI		09/22/72	SAFSTOR

Fort St. Vrain Platteville, CO	HTG/842	12/21/73 08/18/89	DECON DECON in progress
GE Vallecitos Boiling Water Reactor Pleasanton, CA	BWR/50	08/31/57 12/09/63	SAFSTOR SAFSTOR
Hallam[b] Hallam, NE	SCGM/256	01/02/62 09/01/64	ENTOMB ENTOMB
Humboldt Bay 3 Eureka, CA	BWR/200	08/28/62 07/02/76	SAFSTOR SAFSTOR
Indian Point 1 Buchanan, NY	PWR/615	03/26/62 10/31/74	SAFSTOR NRC review
La Crosse Genoa, WI	BWR/165	07/03/67 04/30/87	SAFSTOR SAFSTOR
Pathfinder Sioux Falls, SD	BWR/190	03/12/64 09/16/67	SAFSTOR DECON in progress
Peach Bottom 1 Peach Bottom, PA	HTG/115	01/24/66 10/31/74	SAFSTOR SAFSTOR
Piqua[b] Piqua, OH	OCM/46	08/23/62 01/01/66	ENTOMB ENTOMB
Rancho Seco Herald, CA	PWR/2772	08/16/74 06/07/89	SAFSTOR NRC review
San Onofre 1 San Clemente, CA	PWR/1347	03/27/67 11/30/92	SAFSTOR[d]
Shippingport[b] Shippingport, PA	PWR/236	N/A 82	DECON DECON completed
Shoreham Wading River, NY	BWR/2436	04/21/89 06/28/89	DECON DECON in progress
Three Mile Island 2 Londonderry Township, PA	PWR/2770	02/08/78 03/28/79	*e*
Trojan Portland, OR	PWR/3411	11/21/75 11/09/92	*f*
Yankee-Rowe Franklin County, MA	PWR/600	12/24/63 10/01/91	*g*

[a]BWR = boiling-water reactor; HTG = high-temperature gas-cooled; OCM = organically cooled and moderated; PTHW = pressure tube, heavy water cooled and moderated; PWR = pressurized-water reactor; SCF = sodium cooled, fast; SCGM = sodium cooled, graphite moderated.

[b]Atomic Energy Commission/Department of Energy owned; not regulated by the Nuclear Regulatory Commission.

[c]Holds by-product license from state of South Carolina.

[d]San Onofre 1 decommissioning plan was due to the Nuclear Regulatory Commission in November 1994.

[e]Three Mile Island 2 has been placed in a monitored storage mode. The licensee plans to maintain the facility in monitored storage until Three Mile Island 1 permanently ceases operation, at which time both units are to be decommissioned simultaneously.

[f]Trojan received a possession-only license on 05/05/93. The license is evaluating SAFSTOR and DECON decommissioning alternatives. A decommissioning plan was due to the Nuclear Regulatory Commission in January 1995.

[g]Yankee Rowe received a possession-only license on 08/05/92. The licensee submitted a decommissioning plan on 12/20/93. Decommissioning alternative depends on the availability of low-level waste disposal facilities.

Source: DOE/RW-0006, rev. 6.

Radioactive materials can be classified as activated or radioactively contaminated materials. Materials become activated when they have been exposed to (irradiated by) high levels of neutron radiation (such as in a reactor). When normal (stable) atoms in a material absorb neutrons, they become unstable (radioactive) and subsequently emit energy in the form of radiation. Radioactive contamination is radioactive material in the form of fine particles, liquids, or gases that are deposited on the surface of, or mixed with, materials that otherwise are not radioactive. Contaminated materials can generally be decontaminated to various degrees by several techniques. These techniques range from simply washing with soap and water to sandblasting contaminated surfaces. Decontamination techniques for liquids and gases include filtration and chemical ion exchange. Activated materials cannot be decontaminated; they remain radioactive until the radioactive constituents decay to stable isotopes.

Reactor components are generally both activated and contaminated. The principal activated components of a power plant are the reactor internals and the biological shield. Other reactor system components, such as the primary and possibly the secondary coolant loops, the turbines in BWRs, and the radioactive waste handling systems, are not activated but are highly contaminated by the contaminated fluids they contain. The major source of contamination in reactor coolant is the plant corrosion and wear material suspended in the coolant that becomes activated as it passes through the reactor core. Surface contamination can also be found in areas of the plant where leaks from contaminated systems have occurred.

The inventory of radionuclides for PWRs and BWRs is slightly different. A typical large PWR would have a radioactivity level of about 4.8 million Ci (1Ci = 3.7×10^{10} Bq) in the major reactor components, 4800 Ci of radioactive corrosion products in the primary coolant system, and 1200 Ci of radioactivity in the concrete biological shield at the time of shutdown (NUREG/CR-0130). A typical large BWR would have a radioactivity level of about 6.3 million Ci in the major reactor components, 8600 Ci of radioactive corrosion products in the primary coolant system, and 1000 Ci of radioactivity in the concrete biological shield at the time of shutdown (NUREG/CR-0672).

The principal radioactive isotopes from irradiated steel and concrete, with their modes of decay and their half-lives, are listed in Table 7.2. By the end of 40 years of operation, the radionuclides with half-lives of less than about 5 years are at equilibrium, because their rates of decay equal their rates of generation. No matter how much longer a power plant is operated, the concentration of short-half-life radionuclides will not increase. The longer-lived radionuclides are generated much faster than they decay; thus their concentrations increase approximately in proportion to the reactor operating time. Figure 7.3 illustrates the buildup of some important radionuclides as a function of nuclear plant operating life.

Radioactive isotopes that are mainly beta emitters or that have very short half-lives do not contribute significantly to the personnel radiation dose associated with decommissioning. Because beta radiation is weakly penetrating, it can be shielded easily and presents a hazard mainly if ingested or inhaled by operations personnel. Isotopes with very short half-life periods can be allowed to decay to insignificant levels before decommissioning operations begin.

At the time of decommissioning, radioactive materials are found in the reactor building, the auxiliary building, and the fuel building (Section 7.2.1). Immediately after operations are terminated, these parts of the plant are highly radioactive because of short-lived activation products. The highest levels of radioactivity subside very quickly as short-lived radionuclides decay and progressively longer-lived radionuclides dominate the overall radioactivity. After about a year, ^{60}Co dominates the radiation dose to workers. After about 100 years, ^{94}Nb dominates the radiation dose to workers or persons in the vicinity (Figure 7.4). For all practical purposes, the radiation dose to workers will not decrease further because ^{94}Nb has a 20,000-year half-life. Because ^{60}Co and ^{94}Nb dominate the radiation dose during the time of decommissioning, their characteristics affect the decommissioning process.

Table 7.2 Principal activated radioactive isotopes found in operating nuclear power plants (excluding fuel)

Element	Isotope	Decay mode[a]	Half-life (years)
Hydrogen	^{3}H	β	1.23×10^{1}
Carbon	^{14}C	β	5.73×10^{3}
Phosphorus	^{33}P	β	6.9×10^{-2}
Silicon	^{35}S	β	2.4×10^{-1}
Chlorine	^{36}Cl	β , γ	3.01×10^{5}
Argon	^{37}Ar	γ	9.5×10^{-2}
Argon	^{39}Ar	β	2.99×10^{2}
Potassium	^{40}K	β , γ	1.28×10^{9}
Calcium	^{41}Ca	γ	8.0×10^{4}
Calcium	^{45}Ca	β	4.5×10^{-1}
Scandium	^{46}Sc	β	2.3×10^{-1}
Chromium	^{46}Cr	β	7.6×10^{-2}
Manganese	^{54}Mn	β	$8. \times 10^{-1}$
Iron	^{55}Fe	β	2.7×10^{0}
Iron	^{59}Fe	β, γ	1.2×10^{-1}
Cobalt	^{58}Co	γ	2.1×10^{-1}
Cobalt	^{60}Co	β, γ	5.27×10^{0}
Nickel	^{59}Ni	γ	8.0×10^{4}
Nickel	^{63}Ni	β	9.2×10^{1}
Zinc	^{65}Zn	γ	6.7×10^{-1}
Niobium	^{93m}Nb	γ	1.36×10^{1}
Niobium	^{94}Nb	β, γ	2.03×10^{4}
Niobium	^{95}Nb	β, γ	9.6×10^{-2}
Molybdenum	^{93}Mo	γ	3.5×10^{3}
Zirconium	^{95}Zr	β, γ	1.8×10^{-1}
Technetium	^{99}Tc	β	2.13×10^{5}
Silver	^{108m}Ag	β, γ	1.27×10^{2}
Silver	^{110m}Ag	β, γ	6.8×10^{-1}
Cadmium	^{109}Cd	γ	1.3×10^{0}
Samarium	^{151}Sm	β, γ	9.0×10^{1}
Europium	^{152}Eu	β, γ	1.33×10^{1}
Europium	^{154}Eu	β, γ	8.8×10^{0}
Holmium	^{166m}Ho	γ	1.2×10^{3}

[a] β = beta, γ = gamma (including x-rays).

Source: R. C. Weast, ed. *Handbook of Chemistry and Physics*, 53rd ed. 1972-73, Chemical Rubber Company, Cleveland, 1972.

Figure 7.3 Buildup of activation products in pressurized-water reactor internal components as a function of effective full-power years.

Source: NUREG/CR-0130.

Figure 7.4 Time dependence of radioactivity and dose rate in a boiling-water reactor core shroud after 40 years of operation. *Source:* NUREG/CR-0672.

Both ^{60}Co and ^{94}Nb are activation products--isotopes created when neutrons from nuclear fission convert nonradioactive elements (^{59}Co and ^{93}Nb) in the structural components of the plant into radioactiveisotopes. An important difference is that ^{94}Nb in the steel reactor vessel and components, formed by activation of ^{93}Nb, is not subject to corrosion and movement throughout the primary system to the extent that ^{60}Co is. Consequently, equipment in the reactor containment building that is not exposed to high neutron fluxes and parts of the fuel and auxiliary buildings may be highly contaminated with ^{60}Co but only slightly so with ^{94}Nb.

Extending operations to 60 years would not increase the shutdown radioactivity level of either a PWR or BWR to any appreciable extent. This is because most of the radioactivity at shutdown results from short-half-life radionuclides, such as ^{60}Co, that are already in equilibrium by the time 40 years of operations have transpired. The only change in radioactive inventory resulting from the additional 20 years of operations is the further accumulation of long-half-life radionuclides such as ^{63}Ni and ^{94}Nb, but these long-half-life radionuclides produce only a small fraction of the total radioactivity at shutdown. Of the long-half-life radionuclides, ^{63}Ni contributes most at shutdown but composes less than 3 percent of the total radioactivity. Twenty additional years of operation would increase its contribution to about 4 percent of total shutdown radioactivity. Because ^{63}Ni is a beta emitter, it contributes only a very small part of the dose to workers or the public. Gamma-emitting ^{94}Nb is the most important long-half-life radionuclide with regard to producing external radiation exposure. Based on Figure 7.4, it can be determined that at shutdown ^{94}Nb contributes less than 0.001 percent of the total potential dose. Even though 20 additional years of operation would increase the amount of ^{94}Nb by 50 percent, it would not increase its contribution to the dose much above 0.001 percent.

7.2.5 Waste Generated During Decommissioning

This section summarizes the quantities and types of radioactive waste and emissions generated in decommissioning after 40 and 60 years of operation, respectively. Because the demolition and disposal of nonradioactive parts of nuclear facilities are not considered part of decommissioning, almost all waste generated during decommissioning is radioactive. Although the demolition and disposal of the nonradioactive parts may continue during and after decommissioning, these activities are not regulated by NRC. The impacts of radioactive wastes and emissions are described in Section 7.3. This section does not take into account volume reduction or aggressive processing that could allow release for unrestricted use.

7.2.5.1 Atmospheric Emissions

As shown in Table 7.3, the total atmospheric releases for decommissioning are less than 100 mCi, whereas normal operations average about 3000 Ci/year. Atmospheric releases are expected to consist largely of dust, aerosols, and smokelike particulates produced during the dismantling and handling of reactor components. These releases were estimated by assuming that the airborne concentrations of radionuclides will be a fraction of the contamination level on and in the radioactive components (NUREG/CR-0130 and NUREG/CR-0672). Because the radioactive inventory would be nearly unchanged by operations during a 20-year license renewal term, no difference exists between the base case and 20 years of additional operation.

Table 7.3 Airborne radioactive releases resulting from decommissioning typical pressurized-water reactors (PWRs) and boiling-water reactors (BWRs) with normal operating releases, base case (40 years of operation) [a]

	DECON (mCi)	SAFSTOR (mCi)	ENTOMB (mCi)	Normal operations (Ci/year)
PWR	0.86[b]	0.003[b]	NA[c]	2,600[d]
BWR	87[e]	0.21d[d]	2.25[d]	3,400[d]

[a]Decommissioning releases are for 40 years of operation. Releases for 60 years of operation would be essentially the same.
[b]*Source:* NUREG/CR-0130, Table 11.2-2.
[c]Not available.
[d]*Source:* DOE/EP-0093.
[e]*Source:* NUREG/CR-0672, Tables N.2-12, N.3-4, N.4-4, E.2-11. Decommissioning is assumed to last 5 years.

7.2.5.2 Liquid Effluents

No estimates of liquid waste releases are available for decommissioning nuclear power plants. However, liquids will be produced by decontamination procedures (e.g., some cutting operations and possibly some chemical decontamination procedures) and by disposal of plant fluids (e.g., cooling water and water from fuel storage pools). Filtration and ion exchange methods will be used to decontaminate liquids, as would be done during normal operations. Some liquid effluents may be contaminated with chelating agents and may require further processing. These methods are expected to keep waterborne effluents of most radionuclides within the values of normal operations. Tritium (^3H) is the only radioactive isotope that cannot be removed from waste water by these means.

Tritium is found principally in the primary coolant-loop water. Tritium cannot be removed from water except by extraordinary means and is normally discharged to a surface water body. Normal ^3H discharges from PWRs range from a few hundred to a few thousand curies per year. BWR ^3H discharges are generally only about 10 percent as high as ^3H discharges from PWRs. About 500 Ci of ^3H can be found in PWR primary coolant-loop water. Discharge of the entire volume of primary coolant-loop water over a period of 1 to 5 years after shutdown would be feasible without exceeding normal operating period discharge rates. The amounts or characteristics of liquid effluents discharged during decommissioning would not be changed by operation during a 20-year license renewal term. Discharge of primary coolant water during normal operations limits the accumulation of ^3H in the primary coolant loop; thus ^3H is in equilibrium in the primary coolant water well before 40 years of operation.

7.2.5.3 Solid Waste

Table 7.4 summarizes the quantities of LLW generated by decommissioning of large PWRs and BWRs. The table shows that the largest amount of LLW is generated by the DECON method and the least is generated by the SAFSTOR method. The quantities listed for the ENTOMB method do not include the volume of the entombing structure or the wastes within.

Table 7.4 Estimated burial volume of low-level waste and rubble for large pressurized-water reactor (PWR) and boiling-water reactor (BWR) decommissioning, base case (40 years of operation)

Decommissioning alternative	PWR (m^3)[a]	BWR (m^3)
DECON	6,992	14,282
SAFSTOR 1	763	1,117
SAFSTOR 2	6,992	14,282
ENTOMB 1	305	490
ENTOMB 2	754	1,139
ENTOMB 3	305	490

[a] 1 m^3 _ 35.3 ft^3

Source: NUREG/CR-5884, Table ES.1 and NUREG/CR-6174, Table ES.1.

The decommissioning waste volumes for all three methods of decommissioning also would not be affected by extending the volume of radioactive materials would not increase. (Operational waste quantities would continue, but they do not affect the amount of decommissioning waste.) An additional 20 years of operation would slightly affect the waste characteristics. As discussed in Section 7.2.4, the quantity of long-lived activation products such as ^{94}Nb would continue to increase, essentially in proportion to the additional operational time. As a result, the long-half-life radionuclides in the waste would increase by 50 percent if the plants were operated an additional 20 years. However, as explained earlier, these long-lived radionuclides contribute only a small fraction of the shutdown radioactivity level.

7.3 Decommissioning Impacts and Changes Resulting from Life Extension

[**Prev** | **Next** | **Table of Contents**]

Estimated decommissioning impacts for 40 years of operation--the base case (taken primarily from NUREG-0586, NUREG/CR-0130, and NUREG/CR-0672)--and the change in impacts caused by continued operations for an additional 20 years under license renewal are reported for each impact area in the following sections. These impacts are estimated for PWRs and BWRs. The per-reactor impacts of decommissioning at multiple-reactor sites are not expected to be significantly different from those at single-reactor sites. [The impacts would be smaller at multiple reactor sites if the reactor decommissionings were staggered and if LLW were stored on the site (NUREG-0586)].

7.3.1 Radiation Dose

The estimated occupational and public radiation doses resulting from the three decommissioning methods after 40 years of operation (base case) are summarized in this section. Occupational dose estimates were presented in draft reports NUREG/CR-5884 and NUREG/CR-6174. These reports do not provide estimates of doses to the public. The Atomic Energy Act requires the Nuclear Regulatory Commission to promulgate, inspect, and enforce standards that provide an adequate level of protection of the public health and safety and the environment. These responsibilities, singly and in the aggregate, provide a margin of safety. For the purposes of assessing radiological impacts, the Commission has concluded that impacts are of small significance if doses and releases do not exceed permissible levels in the Commission's regulations.

7.3.1.1 Occupational Dose

For both PWRs and BWRs, there are substantial differences among the occupational radiation doses for the decommissioning methods (Table 7.5). The DECON method has the highest doses, followed by ENTOMB and then SAFSTOR. Although extending operations 20 years would increase the doses from ^{94}Nb and other less-important long-half-life radionuclides, these doses would not have any appreciable effect on the occupational dose because short-lived radionuclides (primarily ^{60}Co) are the principal sources of worker exposure. For each decommissioning method, the bulk of the dose comes during activities in the first few years after termination of plant operations (period four begins less than 5 years after terminating operations for DECON), when the radioactivity level of ^{60}Co is still significant. At the end of 60 years of SAFSTOR, the dose rate would have decayed to about 0.01 percent of the dose rate at the end of operations, at which time ^{94}Nb would contribute only about 2 percent of the total (Figure 7.4).

An additional 20 years of operation before 60 years of SAFSTOR would increase the amount of ^{94}Nb by approximately 50 percent. During period 5, occupational exposures from SAFSTOR activities would be no more than 10 person-rem. (Section E.A.3 of Appendix E discusses the International System units used in measuring radioactivity and radiation

dose. The contribution from ^{94}Nb would be less than 0.2 person-rem. The increase in dose during decommissioning after 20 additional years of operation would be no more than about 0.1 person-rem.

Although total doses to the decommissioning workforce may increase slightly as a result of an additional 20 years of plant operation, the exposure of individual workers will be maintained well below the existing regulatory limits of 10 CRF Part 20. Accordingly, the Commission concludes that radiological impacts to the decontamination workforce as a result of license renewal is of small significance.

The potential increase in total dose to the decommissioning work force may be mitigated by programs that are responsive to 10 CFR 20.1101(b), which requires that "The licensee shall use, to the extent practicable, procedures and engineering controls based upon sound radiation protection principles to achieve occupational doses and doses to members of the public that are as low as is reasonably achievable (ALARA)." The ongoing ALARA programs within the industry already employ measures that would be considered for mitigating the generation or the accumulation of long-lived activation products during 20 additional years of operation. Two examples of mitigation measures that are already in use are (1) replacing components using cobalt alloys with those using low-cobalt or cobalt-free alloys and (2) full system decontamination (e.g., see Moore 1995). No additional mitigation measures warranted. This is a Category 1 issue.

Table 7.5 Estimated occupational radiation doses for decommissioning a large reactor (person-rem), base case (40 years of operation)[a].

Decommissioning period [b]	DECON[c,d]	SAFSTOR[c,e]	ENTOMB[c,f]
Pressurized-water reactor[g]			
1	--	--	--
2	207	207	207
3	21	21	21
4	704	88	562-589
5	NA	0-6	0
Totals[h]	931	315-322	790-816
Boiling-water reactor [i]			
1	--	--	--
2	425	425	425
3	10	10	10
4	528	123	166-230
5	NA	0-10	0
Totals[h]	962	558-568	601-665

[a]Occupational radiation exposures are for decommissioning after 40 years of operations.
[b]Decommissioning periods are defined in NUREG/CR-6174 and NUREG/CR-5884.
[c]DECON, SAFSTOR, and ENTOMB are defined differently by NUREG/CR-5884 and NUREG/CR-6174 than by previous analyses.
[d]Table 3.1.
[e]Table 4.1.
[f]Table 5.2.
[g]*Source:* NUREG/CR-5884.
[h]Totals may not equal sum of entries because of rounding.
[i]*Source:* NUREG/CR-6174.

7.3.1.2 Dose to the Public

For both PWRs and BWRs, the radiation dose to the public results primarily from waste shipment (Table 7.6). Furthermore, the dose is almost exclusively caused by shipment of ^{60}Co and shorter-lived radionuclides; for truck shipments, the SAFSTOR 100-years alternative shows negligible dose to the public. Because only the quantities of long-lived radionuclides would increase if plants were operated an additional 20 years, only the dose caused by the long-lived radionuclides would increase. Because the dose to the public from long-lived radionuclides after 40 years of operation is negligible (see the SAFSTOR 100-years alternative in Table 7.6), an increase of 50 percent of this negligible amount would still remain a negligible dose (less than 0.1 person-rem).

Table 7.6 Estimated radiation dose to the public for decommissioning a largen-rem), base case (40 years of operation)[a,b]

	SAFSTOR			
	DECON	30 years	100 years	ENTOMB
Pressurized-water reactor				
SAFSTOR preparation	NA	neg	neg	NA
Continuing care	NA	neg	neg	neg
Decontamination	neg[c]	neg[c]	neg[c]	NA
Entombment	NA	NA	NA	neg
SAFSTOR preparation truck shipments	NA	2	2	NA
Decontamination truck shipments	21[c]	0.4[c]	neg[c]	NA
Entombment truck shipments	NA	NA	NA	4
Totals	21	3	2	4
Boiling-water reactor				
SAFSTOR preparation	NA	neg	neg	NA
Continuing care	NA	neg	neg	neg
Decontamination	neg[c]	neg[c]	neg[c]	NA
Entombment	NA	NA	NA	neg
SAFSTOR preparation truck shipments	NA	2	2	NA
Decontamination truck shipments	10[c]	neg[c]	neg[c]	NA
Entombment truck shipments	NA	NA	NA	5-7[d]
Totals	10	2	2	5-7[d]

[a]Public radiation exposures are for decommissioning after 40 years of operation (NUREG-0586).

Decommissioning exposures after 60 years would be identical, except as noted. Draft reports NUREG/CR-5884 and

NUREG/CR-6174 do not provide updates for this information.

[b]NA means not applicable and neg means negligible.

[c]Decommissioning after 60 years of operation would increase occupational and public exposure during

(1) decontamination and (2) decontamination truck shipments by only negligible amounts.

[d]Ranges are for removing or leaving internal components or leaving them in place. The higher exposures are associated with removing the internals.

Note: To convert person-rem to person-sievert, multiply by 0.01.

The negligible public radiation exposures for SAFSTOR preparation, continuing care, and decontamination (Table 7.6) include exposures from atmospheric and liquid releases during routine decommissioning operations. There are no historical records of significant releases during decommissioning, and no reliable estimates can be made of the probability and consequences of such events. However, the probability and consequences of such releases are not expected to be different for decommissioning a base case facility versus decommissioning a facility that has had 20 years of additional operation.

Extending reactor operating life from 40 to 60 years is expected to increase the concentration of long-half-life radionuclides in the facility by up to 50 percent. By the end of the initial 40 years of operation, the radionuclides with half-lives of less than about 5 years are at equilibrium because their rates of decay equal their rates of generation. The release of radioactivity to the atmosphere during decontamination is negligibly small and primarily involves short-lived nuclides. Public exposure even with the increased concentration of long-lived nuclides would remain negligible. The exposure of individual members of the public will be maintained well below existing regulatory limits. Accordingly, the staff concludes that the contribution of license renewal to radiological impacts from decontamination is of small significance. As discussed in Section 7.3.1.1, measures that can reduce possible dose levels to the public are available and are being employed in pursuit of ALARA.

Radiation doses (public and occupational) from decommissioning that are attributable to license renewal are a Category 1 issue.

7.3.2 Waste Management Impacts

An operating 1000-MW(e) reactor generates about 38 m^3 (1300 ft^3) of spent fuel and about 52,000 m^3 (1,800,000 ft^3) of LLW over its 40-year life (NUREG-0586, pp. 2-21). (LLW is defined in Chapter 6.) The reference PWR and BWR are about 15 percent larger, so they would be expected to generate about 15 percent more waste than a 1000-MW(e) plant. As shown by Table 7.4, decommissioning either type of plant after 40 years of operation (base case) would generate less than 15,000 m^3 (530,000 ft^3) of LLW for DECON or short-term SAFSTOR and less than 1,200 m^3 (42,000 ft^3) of LLW for SAFSTOR of 50 years or longer. These waste volumes include spent chelating agent used to decontaminate liquids. The 15,000 m^3 (530,000 ft^3) of decommissioning LLW is about 25 percent, and 1,200 m^3 (42,000 ft^3) is only about 2 percent, of the LLW generated by 40 years of operations. None of these estimates of waste volume includes waste generation during refurbishment.

Extending operations by 20 years would not increase decommissioning waste volumes, so the ratio of decommissioning waste volume to operating waste volume would be even lower. After 60 years of operation, decommissioning LLW would be less than about 20 percent of the operational LLW. If SAFSTOR were used, the decommissioning LLW would be only about 1 percent of the LLW generated by operations.

While the volume of decommissioning waste will not increase with 20 years of additional operating time, the concentration of long-half-life radionuclides will increase. LLW is classified by 10 CFR Part 61 into three waste classes denoted A, B, and C and a category of LLW designated "greater than Class C" (GTCC). Classes A and B are wastes that are contaminated with relatively short-half-life radionuclides and may be safely disposed of near the earth's surface because they will decay to a nonhazardous condition within about 100 years. Class C waste can be disposed of at a moderate depth or near the earth's surface with engineered barriers to prevent inadvertent intrusion into the wastes. GTCC waste cannot safely be disposed of near the earth's surface (Section 6.2.2.2; 10 CFR Part 61.7).

Table 7.7 gives the estimated decommissioning LLW breakdown (DECON scenario) for the base case by waste class per 10 CFR Part 61. Items classified as C and GTCC consist of highly activated metal located in the high-flux neutron field. For the PWR, the GTCC items include the lower core barrel, the thermal shields, the core shroud, and the lower grid plate. The class C items are the upper grid plate and the lower support column. The class B wastes consist of spent resins used during decommissioning, part of the combustible contaminated wastes, and part of the cylindrical pressure

vessel wall. The only GTCC wastes from a BWR are the core shroud and top fuel guide. BWR class C wastes are from the control rods and in-core instrumentation, jet pump assemblies, and the top fuel guide. The class B wastes are from the steam separator assembly, the reactor vessel wall, and portions of the clean-up wastes.

Table 7.7 Decommissioning waste volumes for reference pressurized-water reactor (PWR) and boiling-water reactor (BWR) after 40 years of operation[a]

	Class A	Class B/C	GTCC[b]
PWR	6,797 m^3	184 m^3	11 m^3
BWR	13,903 m^3	372 m^3	6.9 m^3

[a]DECON decommissioning method. Other methods would have smaller volumes of Class A and B wastes; Class C and GTCC wastes volumes would not change for other methods. A plant that has operated 60 years would have essentially the same waste volumes and classifications.
[b]GTCC = greater than Class C.

Source: NUREG/CR-5884 and NUREG/CR-6174.

Note: 1 m^3 _ 35.3 ft^3.

The radionuclides of most importance for determining the classification of these LLWs are those that have relatively long half-life periods, such as ^{59}Ni and ^{94}Nb. These are also the radionuclides that accumulate in proportion with the length of reactor operation. The estimates in Table 7.7 are made for a plant that has operated 40 years. A plant that has operated 60 years would have essentially the same decommissioning waste volumes and classifications. Because the radionuclide concentration differences among waste classes are large (factors of 10 or more) and because the concentrations of radionuclides increase by no more than 50 percent, few components would be advanced to a higher classification by an additional 20 years of operations. Because the decommissioning waste volumes and classifications are essentially unchanged by an additional 20 years of plant operation, the Commission finds that the environmental impacts of decommissioning waste due to license renewal are of small significance. Measures employed within the context of ALARA, as discussed in Section 7.3.1.1, have the potential to reduce slightly the volume of LLW generated by decommissioning. The impact on decommissioning waste management attributable to license renewal is a Category 1 issue.

7.3.3 Air Quality Impacts

Air quality impacts of decommissioning are expected to be negligible. No major land disturbance for construction laydown or temporary waste storage areas is anticipated. The principal air quality impacts would result from motor vehicles operated by workers for transportation on-site and for movement of people and materials to and from the site. Most decommissioning activities would be conducted inside the containment, the auxiliary building, and the fuel-handling buildings. Because there would be a possibility of airborne releases of radioactivity within these buildings during decommissioning, releases to the ambient environment would be controlled. These impacts would be much smaller than those associated with construction or demolition of the facilities on-site and would not change with 20 additional years of operation. License renewal and an additional 20 years of reactor operation will have no impact on air quality during decommissioning; thus the impact of license renewal on decommissioning air quality impacts is of small significance for all plants. Because license renewal does not affect the level of air pollution during decommissioning, there is no need for the consideration of mitigation as part of the license renewal environmental review. The impact of decommissioning on air quality attributable to license renewal is a Category 1 issue.

7.3.4 Water Quality Impacts

The principal water quality impacts expected from decommissioning are those associated with sanitary sewer operations. Because the decommissioning work force is likely to be smaller than those of construction and certain operational activities (see Section 7.3.7), no increase in water quality impacts is expected. Soil erosion and chemical spills associated with increased site activities during decommissioning have the potential to degrade water quality, but

such effects are readily controllable. The potential for significant water quality impacts from erosion or spills is no greater if decommissioning occurs after a 20-year license renewal instead of after the original 40 years of operation. Measures to minimize occupational and public radiation exposure will also protect water quality. License renewal and an additional 20 years of reactor operation will have no impact on water quality during decommissioning; thus the impact is of small significance. Because license renewal does not affect water quality impacts during decommissioning, there is no need for the consideration of mitigation as part of the license renewal environmental review. The impact of decommissioning on water quality impacts attributable to license renewal is a Category 1 issue.

7.3.5 Ecological Impacts

Terrestrial biota impacts, if any, would be associated with land disturbance for laydown or temporary waste storage areas, and no such land disturbance is anticipated. No direct impacts to aquatic biota are expected from routine decommissioning activities. Measures employed to protect water quality will also prevent toxic effects to aquatic organisms from liquid effluents. Therefore, the ecological impacts associated with decommissioning are not expected to vary with the length of time the plant is operated. Decommissioning after a 20-year license renewal would have the same ecological impacts, if any, as decommissioning after 40 years of operation; thus the impact is of small significance. Because license renewal does not affect ecological impacts during decommissioning, there is no need for the consideration of mitigation as part of the license renewal environmental review. The impact of decommissioning on ecological resources attributable to license renewal is a Category 1 issue.

7.3.6 Economic Impacts

In general, the nature of the activities and the elements of the costs associated with decommissioning are well understood, and the necessary skills and equipment should be readily available when needed. Table 7.8 lists percentage estimates of total costs for decommissioning large PWR and BWR reactors by the DECON method.

A 1991 national survey had estimates that averaged $218 million per 1000 MW for a PWR reactor and $283 million per 1000 MW for a BWR. The standard deviation was $74 million for PWRs and $144 million for BWRs. For both types of reactors, the range for plus and minus one standard deviation was $131 million to $350 million (OTA-E-575). These varying estimates reflect the uncertainty of projecting costs well into the future. Additionally, the unique aspects of a plant's design and operating history can affect decommissioning costs (e.g., Three Mile Island Unit 2 and Fort St. Vrain).

The largest cost category is "undistributed"; the largest component of this cost is utility support staff. The timing of decommissioning could influence disposal costs depending on the price of disposal services. The current trend is steeply increasing cost per units of radioactive waste disposal. If this trend continues over the long run, then one effect of license renewal could be to increase decommissioning costs. However, disposal costs should stabilize by the time that most existing plants would be eligible for license renewal. If this is the case, license renewal would have a minimal effect on the undiscounted costs of decommissioning after a 20-year extended operation period, compared with after 40 years of operation.

For the cost estimates included in Table 7.8, doubling the cost per cubic foot of waste disposal would increase total decommissioning costs by about 13 percent for PWRs and 20 percent for BWRs. The assumed rate charged for disposal would have to increase by a factor of about 6 to double the total cost of decommissioning. If the rate of disposal costs turns out to be significantly more than has been assumed in decommissioning cost estimates, there would tend to be significantly more attention devoted to volume reduction; thus, total cost of disposal would tend to increase less than the proportional increase in the rate charged per cubic foot (NUREG/CR-5884, vol. 1, pp. 3.56, 3.57, and NUREG/CR-6174, vol. 1, p. 3.55).

The timing of decommissioning could also affect costs if progress in robotics technology reduces costs and worker radiation exposure. This progress would affect a relatively small part of the decommissioning process and thus is unlikely to reduce the total cost of decommissioning significantly; however, it could result in substantial dose reductions.

Table 7.8 Summary and distribution of decommissioning costs for large pressurized-water reactors (PWRs) and boiling-water reactors (BWRs) (thousands of 1993 dollars)

Decommissioning alternative	Duration[a] (years)	Decon[b] (%)	Removal[c] (%)	Packaging[d] (%)	Transport[e] (%)	Disposal[f] (%)	Undistributed[g] (%)	Present value[h] of total cost ($ x 10^3)	Present value[h] of savings[i] for license renewal ($ x 10^3)
Pressurized-water reactor									
DECON	11	16.7	9.5	1.6	3.3	17.0	51.9	101,600	41,032
SAFESTOR1	59	11.0	0.5	0.3	1.0	3.4	83.8	93,000	37,559
SAFESTOR2	60	9.1	5.2	0.9	1.8	9.1	74.0	101,900	41,153
ENTOMB1	60	NA	NA	NA	NA	NA	NA	104,300	42,123
ENTOMB2	60	NA	NA	NA	NA	NA	NA	106,100	42,850
ENTOMB3	300	NA	NA	NA	NA	NA	NA	109,500	44,223
Boiling-water reactor									
DECON	9	11.1	9.2	2.6	0.9	27.3	48.9	133,250	53,814
SAFESTOR1	59	7.6	1.0	0.2	0.5	3.1	87.5	121,600	49,109
SAFESTOR2	60	5.8	4.8	1.4	0.5	14.1	73.5	134,200	54,198
ENTOMB1	60	NA	NA	NA	NA	NA	NA	151,900	61,346
ENTOMB2	60	NA	NA	NA	NA	NA	NA	155,200	62,679
ENTOMB3	300	NA	NA	NA	NA	NA	NA	164,500	66,435

[a]Preshutdown period not included in duration total.

[b]Includes direct decommissioning labor and materials for chemical decontamination of systems, cleaning of surfaces, and waste water treatment.

[c]Includes direct labor and materials costs of removal.

[d]Includes direct costs of waste disposal packages.

[e]Includes cask rental costs and transportation costs.

[f]Includes all costs of disposal at the LLW disposal facility.

[g]Includes all costs that are period-dependent--e.g., commissioning operations contractor (DOC) mobilization/demobilization, utility and DOC overhead staff, nuclear insurance, regulatory costs, plant power usage, taxes, laundry services, environmental monitoring. Most of the undistributed costs are for staffing.

[h]At 3 percent discount rate.

[i]The decommissioning costs have been discounted at a rate of 3 percent real (assumes no inflation). At this rate, delaying decommissioning by the 20-year period of license renewal saves about 45 percent of the decommissioning cost; however, present value total costs have been figured at 2.5 years from final plant shutdown, resulting in savings from license renewal of about 40 percent.

Source: Tables 3.1 and 4.1 and pp. 3.59, 4.13, and 5.13 of NUREG/CR-5884, Vol. 1; Tables 3.1 and 4.1 and pp. 3.58, 4.12, and 5.11 of NUREG/CR-6174, Vol. 1.

The preceding sections show that there is no reason to expect the physical requirements of decommissioning to be materially different when comparing the base case to a 20-year extended operation period. The undiscounted economic costs, although uncertain, should also be relatively stable and thus unaffected by license renewal. However, because of financial considerations, the timing of decommissioning costs is important. To compare costs of activities that occur at different times, it is necessary to discount these costs to a common point in time. This is accomplished through present

worth calculations, which account for the real opportunity cost or time value of money. Delaying decommissioning will allow any funds accumulated for this purpose to earn a return over the additional 20 years of license renewal and thus to reduce the present value of the decommissioning costs. The reduction in the present value is a function of the delay (license renewal period) and the time value of money, so the present value would be reduced by the same amount even if no fund were established and decommissioning were financed with borrowed money at the end of the plant operations. Regardless of how it is financed, the present value of delaying decommissioning costs will result in significant financial cost savings if a positive real discount rate is assumed.

Because total decommissioning costs are uncertain, the amount of financial savings that results from delaying decommissioning is also uncertain. Higher-than-expected decommissioning costs would result in higher cost savings resulting from delaying these costs, and vice versa. At a 3 percent real (i.e., above general inflation) discount rate, the present value savings associated with license renewal is about 40 percent of decommissioning costs (Table 7.8). Real cost increases, which might occur for waste disposal costs, could reduce the cost advantage of license renewal, but waste disposal costs are expected to stabilize before the current licenses of most plants expire. The impact of license renewal on decommissioning costs is not a consideration in the environmental review and decision whether to renew a license.

7.3.7 Socioeconomic Impacts

Socioeconomic impacts associated with decommissioning will be induced by the net change in the labor force as incoming decommissioning workers replace emigrating operations workers. The nature of these impacts will depend on the vitality of local economic activity at the time of decommissioning.

One of the difficulties of attempting to evaluate the socioeconomic impacts of decommissioning in year 40 of a plant's life compared with decommissioning in year 60 relates to the uncertainties about the size of the work force required. The largest nuclear power plant decommissioned to date has been the 150-MW(e) Shippingport Station (Section 7.2.3), which required an average work force during the peak year of approximately 230 workers (DOE/SSDP-0081); this work force was larger than the estimated work forces for very large power plants examined in studies prepared before the Shippingport experience (NUREG/CR-0130, Table 9.1-1; NUREG/CR-0672, Table 9.1-3). Because more-recent manpower estimates for large nuclear power plants are not available, the actual work force required in the future might be substantially larger than currently expected.

If the decommissioning process requires a smaller work force than the on-site operating staff and if the local economy is stable or declining, the result could be economic hardships, including declining property values and business activity, and problems for local government as it adjusts to lower levels of tax revenues. However, even this reduced work force will tend to mitigate temporarily the full adverse socioeconomic effects of terminating operations.

If there is a net reduction in the community work force but the economy is growing, the adverse impacts of this ongoing growth (e.g., housing shortages and school overcrowding) could be reduced.

If the decommissioning work force were substantially larger than the operational work force, the result could be increased demand for housing and public services but also increased tax revenues and higher real estate values. If the economy is characterized by decline, decommissioning could temporarily reverse the adverse economic effects.

In a stable economy, a net increase in the community work force could lead to some shortages in housing and public services, as well as to the higher tax revenues and real estate values mentioned previously. In a growing economy, decommissioning could act as an exacerbating factor to the ongoing shortages that already might exist.

Although the staff cannot project with certainty either the size of the required decommissioning work force or the state of the local economy at the time of decommissioning, the staff has assumed that the baseline conditions will be negligibly different in year 40, compared with year 60. Therefore, the staff expects that the socioeconomic impacts of decommissioning would be essentially similar whether that action were taken in year 60 or in year 40. The impact of license renewal on the socioeconomic impacts of decommissioning are of small significance. Because license renewal

does not affect the socioeconomic impacts that will occur at the time of decommissioning, there is no need for the consideration of mitigation as part of the license renewal environmental review. The impact of decommissioning on socioeconomic resources attributable to license renewal is a Category 1 issue.

7.4 Conclusions

[**Prev** | **Next** | **Table of Contents**]

The physical requirements and attendant effects of decommissioning nuclear power plants after a 20-year license renewal are not expected to differ from those of decommissioning at the end of 40 years of operation. Decommissioning after a 20-year license renewal would increase the occupational dose no more than 0.1 person-rem (compared with 7,000 to 14,000 person-rem for DECON decommissioning at 40 years) and the public dose by a negligible amount (Section 7.3.1). License renewal would not increase to any appreciable extent the quantity or classification of LLW generated by decommissioning (Section 7.3.2). Air quality, water quality, and ecological impacts of decommissioning would not change as a result of license renewal (Sections 7.3.3, 7.3.4, and 7.3.5). There is considerable uncertainty about the cost of decommissioning; however, while license renewal would not be expected to change the ultimate cost of decommissioning, it would reduce the present value of the cost (Section 7.3.6). The socioeconomic effects of decommissioning will depend on the magnitude of the decommissioning effort, the size of the community, and the other economic activities at the time, but the impacts will not be increased by decommissioning at the end of a 20-year license renewal instead of at the end of 40 years of operation (Section 7.3.7). Incremental radiation doses, waste management, air quality, water quality, ecological, and socioeconomic impacts of decommissioning due to operations during a 20-year license renewal term would be of small significance. No mitigation measures beyond those provided by ALARA are warranted within the context of the license renewal process. The impacts of license renewal on radiation doses, waste management, air quality, water quality, ecological resources, and socioeconomics impacts from decommissioning are Category 1 issues.

7.5 References

[**Prev** | **Next** | **Table of Contents**]

DOE/EP-0093, *Energy Technology Characterizations Handbook*, Environmental Pollution and Control Factors, U.S. Department of Energy, Washington, D.C., March 1983.

DOE/RW-0006, Rev. 5, Vol. 1, *Integrated Data Base for 1989: Spent Fuel and Radioactive Waste Inventories, Projections, and Characteristics*, prepared by Oak Ridge National Laboratory, Oak Ridge, Tennessee, for U.S. Department of Energy, Washington, D.C., November 1989.

DOE/RW-0006, Rev. 6, *Integrated Data Base for 1990: Spent Fuel and Radioactive Waste Inventories, Projections, and Characteristics*, prepared by Oak Ridge National Laboratory, Oak Ridge, Tennessee, for U.S. Department of Energy, Washington, D.C., November 1990.

DOE/SSDP-0081, *Final Project Report Shippingport Station Decommissioning Project*, prepared by Westinghouse Hanford Company, Shippingport Station Decommissioning Project Office, for the U.S. Department of Energy, Richland Operations Office, Richland, Washington, December 1989.

"France," *Power in Europe* **88**, 14, December 6, 1990.

Gaunt, J., et al., *Decommissioning of Nuclear Power Facilities*, Energy Saves Paper No. 28, The World Bank, Washington, D.C., April 1990.

Moore, T., "Milestone Achieved in Nuclear System Decontamination," *EPRI J.*, 28-32, November/December 1995.

NUREG-0586, *Final Generic Environmental Impact Statement on Decommissioning of Nuclear Facilities*, U.S. Nuclear Regulatory Commission, Office of Regulatory Research, August 1988.

NUREG/CR-0130, Vol. 1, R. I. Smith, et al., *Technology, Safety and Costs of Decommissioning a Reference Pressurized Water Reactor Power Station*, prepared by Pacific Northwest Laboratory, Richland, Washington, for U.S. Nuclear Regulatory Commission, June 1978.

NUREG/CR-0130, Addendum 4, G. J. Konzek and R. I. Smith, *Technology, Safety and Costs of Decommissioning a Reference Pressurized Water Reactor Power Station's Technical Support for Decommissioning Matters Related to Preparation of the Final Decommissioning Rule*, prepared by Battelle, Pacific Northwest Laboratory, Richland, Washington, for U.S. Nuclear Regulatory Commission, July 1988.

NUREG/CR-0672, H. D. Oak, et al., *Technology, Safety and Costs of Decommissioning a Reference Boiling Water Reactor Power Station*, prepared by Pacific Northwest Laboratory, Richland, Washington, for U.S. Nuclear Regulatory Commission, June 1980.

NUREG/CR-0672, Addenda 3 and 4, G. J. Konzek and R. I. Smith, *Technology, Safety and Costs of Decommissioning a Reference Boiling Water Reactor Power Station: Comparison of Two Decommissionings Cost Estimates Developed for the Same Commercial Nuclear Reactor Power Station*, prepared by Pacific Northwest Laboratory, Richland, Washington, for U.S. Nuclear Regulatory Commission, December 1990.

NUREG/CR-5491 (PNL-7191), R. P. Allen and A. B. Johnson, *Shippingport Station Aging Evaluation*, U.S. Nuclear Regulatory Commission, Washington, D.C., January 1990.

NUREG/CR-5884 (PNL-8742), J. G. Konzek, et al., *Revised Analyses of Decommissioning of the Reference Pressurized Water Reactor Power Station* (draft report for comment), Vols. 1 and 2, prepared by Pacific Northwest Laboratory, Richland, Washington, for U.S. Nuclear Regulatory Commission, October 1993.

NUREG/CR-6174 (PNL-9975), R. I. Smith, et al., *Revised Analyses of Decommissioning for the Reference Boiling Water Reactor Power Station* (draft report for comment), Vols. 1 and 2, prepared by Pacific Northwest Laboratory, Richland, Washington, for U.S. Nuclear Regulatory Commission, September 1994.

OTA-E-575, *Aging Nuclear Power Plants: Managing Plant Life and Decommissioning*, U.S. Congress, Office of Technology Assessment, Washington, D.C., September 1993.

Page Last Reviewed/Updated Sunday, March 13, 2011

©2000- 2011 NRC

Generic Environmental Impact Statement for License Renewal of Nuclear Plants (NUREG-1437 Vol. 1)

8. Alternatives to License Renewal

[**Prev** | **Next** | **Table of Contents**]

8.1 Introduction

[**Prev** | **Next** | **Table of Contents**]

The Nuclear Regulatory Commission's (NRC's) environmental review regulations implementing the National Environmental Policy Act (NEPA) (10 CFR Part 51) require that the NRC consider all reasonable alternatives to a proposed action before acting on a proposal, including consideration of the no-action alternative. The intent of such a consideration is to enable the agency to consider the relative environmental consequences of an action given the environmental consequences of other activities that also meet the purpose of the action, as well as the environmental consequences of taking no action at all. The information in this chapter does not constitute NRC's final consideration of alternatives to license renewal. Therefore, the rule accompanying this Generic Environmental Impact Statement (GEIS) does not contain any conclusions regarding the environmental impact or acceptability of alternatives to license renewal. Accordingly, the NRC will conduct a full analysis of alternatives at individual license renewal reviews. NRC expects that information contained in this chapter will be used in the analysis of alternatives for the supplemental environmental impact statements prepared for individual license renewals. As defined in Chapter 1, the proposed action is the granting of a renewed license. Additionally, the purpose of such a proposal is to provide an option that allows for power generation capability beyond the term of a current nuclear power plant operating license in order to meet future system generating needs as such needs may be determined by state, utility, and, where authorized, federal (other than NRC) decision makers. This chapter examines the potential environmental impacts associated with denying a renewed license (i.e., the no action alternative); the potential environmental impacts from electric generating sources other than nuclear license renewal; the potential impacts from instituting additional conservation resources to reduce the total demand for power; and the potential impacts from power imports.

The no-action alternative is the denial of a renewed license. In general, if a renewed license were denied, a plant would be decommissioned and other electric generating sources would be pursued if power were still needed. It is important to note that NRC's consideration of the no-action alternative does not involve the determination of whether any power is needed or should be generated. The decision to generate power and the determination of how much power is needed are at the discretion of state and utility officials.

While many methods are available for generating electricity, and a huge number of combinations or mixes can be assimilated to meet a defined generating requirement, such expansive consideration would be too unwieldy to perform given the purposes of this analysis. Therefore, NRC has determined that a reasonable set of alternatives should be

limited to analysis of single, discrete electric generation sources and only electric generation sources that are technically feasible and commercially viable.

To generate this reasonable set of alternatives, NRC included commonly known generation technologies and consulted various state energy plans to identify the alternative generation sources typically being considered by state authorities across the country. From this review, NRC has established a reasonable set of alternatives to be examined in this chapter. These alternatives include wind energy, photovoltaic (PV) cells, solar thermal energy, hydroelectricity, geothermal energy, incineration of wood waste and municipal solid waste (MSW), energy crops, coal, natural gas, oil, advanced light water reactors (LWRs), and delayed retirement of existing non-nuclear plants. NRC has considered these alternatives pursuant to its statutory responsibility under NEPA. NRC's analysis of these issues in no way preempts or displaces state authority to consider and make decisions regarding energy planning issues.

This chapter also includes a discussion of conservation and power import alternatives. Although these alternatives do not represent discrete power generation sources, they represent options that states and utilities may use to reduce their need for power generation capability. In addition, energy conservation and power imports are possible consequences of the no-action alternative. While these two alternatives are not options that fulfill the stated purpose and need of the proposed action *per se* (i.e., options that provide power generation capability), they nevertheless are considered in this chapter because they are important tools available to energy planners in managing need for power and generating capacity.

The potential environmental impacts evaluated include land use, ecology, aesthetics, water quality, air quality, solid waste, human health, socioeconomics, and culture. These impacts are addressed in terms of construction impacts and operational impacts (Tables 8.1 and 8.2 , respectively). This chapter occasionally mentions economic costs of particular alternatives for descriptive purposes; they do not provide a basis for an NRC decision on license renewal. In addition such economic costs may change prior to specific license renewal decisions as improvements occur to particular technologies. Additionally, this chapter discusses the relative construction and operating costs of various technologies where available.

8.2 Environmental Impacts of the No-Action Alternative

[**Prev** | **Next** | **Table of Contents**]

As discussed in the introduction, the no-action alternative is denial of a renewed license. Denial of a renewed license as a power generating capability may lead to a variety of potential outcomes. In some cases, denial may lead to the selection of other electric generating sources to meet energy demands as determined by appropriate state and utility officials. In other cases, denial may lead to conservation measures and/or decisions to import power. In addition, denial may result in a combination of these different outcomes. Therefore, the environmental impacts of such resulting alternatives would be included as the environmental impacts of the no-action alternative. Additionally, a denial of a renewed license would lead to facility decommissioning and its associated impacts; these impacts would also represent impacts of the no-action alternative.

The environmental impacts expected from decommissioning are analyzed in NUREG-0586, *Final Generic Environmental Impact Statement of Decommissioning of Nuclear Facilities* (1988). Consequently, NUREG-0586 represents some of the environmental impacts associated with denial of a renewed license. The analysis in Section 8.3 is equally applicable to the no-action alternative in that the alternatives analyzed in this section are all possible actions resulting from denial of a renewed license. Therefore, Section 8.3 represents additional impacts of the no-action alternative.

8.3 Environmental Impacts of Alternative Energy Sources

This section describes the technologies and evaluates the environmental impacts of 13 energy supply or demand alternatives identified by NRC as capable of satisfying the purpose and need of the proposed action [i.e., to provide an option that allows for power generation capability beyond the term of a current nuclear power plant operating license to meet future system generating needs as such needs may be determined by state, utility, and, where authorized, federal (other than NRC) decision makers]. The technologies were selected because they correspond with those generally considered in state energy plans as potential generating technologies, or they were proposed as alternatives to nuclear license renewal in comments to the Draft GEIS. Many of these technologies differ dramatically from nuclear, and it is important to evaluate them using a consistent standard. A reference generating capacity of 1000 MW(e) is used in evaluating environmental impacts, because this is the approximate generating capacity of many nuclear plants.

The section evaluates impacts that could occur during construction (Table 8.1) or operation (Table 8.2) of each alternative technology. Environmental resources considered include land use, ecology, aesthetics, water quality, air quality, human health, socioeconomics, and cultural resources. The tables provide more detailed information, and the text highlights the more important impacts. References are omitted in the text when they are included in the impact tables.

License renewal decisions may vary considerably among states and utilities based on numerous factors, of which environmental factors are but one set. These decisions may be reached by utilities and states prior to NRC involvement. NRC staff evaluated the process used by 10 states with nuclear power plants to decide which electricity supply and demand options to implement. (NRC examined state energy plans of California, Florida, Illinois, Massachusetts, Michigan, Minnesota, New York, Texas, Vermont, and Wisconsin.) NRC determined that integrated resource planning in some form is used in almost all of these states. Nuclear technology and license renewal are not emphasized in most of these plans, which are developed by either state energy offices or state public service commissions. It is apparent in the plans that nuclear generating plants submitted for license renewal would be required to demonstrate the overall benefits of license renewal over alternative technologies before states would approve renewal. The options would include large, central generating stations powered by nonrenewable sources of energy, probably coal or natural gas, or advanced technologies powered by those same fuels. Some states not enamored of conventional nuclear power may be amenable to considering advanced nuclear technologies. Renewable energy sources have the potential to replace at least some of the generating capacity lost through decommissioning nuclear plants. Solar thermal energy, PV cells, wind energy, hydroelectricity, energy crops, and incineration of MSW and wood waste have some potential in most states surveyed. Geothermal energy has potential in states like California where the resource is prevalent.

Besides sources of power generation, other alternatives are mentioned in state energy plans. Demand-side management (DSM) is viewed in every state as a means to help meet electricity forecasts. Other alternatives include end-use conservation and purchases of power from other utility systems in the United States, Canada, or Mexico. While these two alternatives are not options that fulfill the stated purpose and need of the proposed action *per se* (i.e., options that provide power generation capability), they nevertheless are considered in this section because they are important tools available to energy planners in managing needs for power and generating capacity.

Every technology discussed in this section could generate power in much smaller facilities than 1000 MW(e) in dispersed locations throughout a utility's service area. Typically, conservation or demand-side alternatives and renewable technologies lend themselves best to relatively small facilities, whereas conventional, nonrenewable technologies are suited more for large central generating stations. Numerous exceptions to these generalizations exist or are feasible. Thus, multiple alternatives could be selected to replace a single nuclear plant. For example, a utility and state public utility commission could agree that a combination of 500 MW(e) of conventional or advanced-technology coal, 100 MW(e) of conservation, 100 MW(e) of purchased power, 50 MW(e) of wind power, 50 MW(e) of MSW combustion, and 200 MW(e) of combined-cycle-generation would be the preferred set of alternatives to replace a single nuclear plant. This siting scenario would be expected to diffuse over a wider area the construction and operational

impacts otherwise expected from a single 1000-MW(e) facility. It also could be feasible to replace a nuclear plant with an equal amount of capacity from a single technology sited in a dispersed fashion. The types and general magnitude of environmental impacts would be about the same as for a central generating facility using that technology, but impacts would be dispersed in smaller concentrations over a wider area.

The following discussion is intended to suggest generic impacts that could occur from each technology as well as approximations of the magnitude of those impacts. In addition, this discussion is intended to address the reasonably foreseeable impacts of the various alternatives and does not attempt to address impacts that are remote or speculative. In the cases of conservation and renewable technologies, where there are no current equivalents to 1000-MW(e) plants, the impact data are less reliable than for nonrenewable technologies. The GEIS depends on data gathered from many studies, and the data may not always be comparable among technologies.

8.3.1 Wind

Of the approximately 33,000 quads of wind resources available annually in the coterminous United States, only about 170 quads per year can be accessed with current technology, and only about 1/6 quad per year can currently be used cost-effectively to generate electricity (DOE/EIA-0561). Wind speeds of at least 21 km/h (13 miles/h) are considered necessary for generating electricity. As shown in Figure 8.1, regions with such speeds include the Great Plains, the West, coastal areas, and parts of the Appalachians (DOE/EIA-0561).

The average annual capacity factor (i.e., the proportion of actual generation to potential generation at 100 percent capacity utilization) is estimated at 21 percent in 1995 and 29 percent in 2010. This relatively low capacity, compared with current baseload technologies, results from the high degree of intermittency of wind energy in many locations (DOE/EIA-0561). Current energy storage technologies are too expensive to permit wind power plants to serve as large baseload plants. The inability to increase the capacity factors of wind power makes the technology an inappropriate choice for baseload power (Johansson et al. 1993)

In 1992, wind provided 1676 MW(e) of electric generating capacity, produced mostly in California by nonutility generators (Hamrin and Rader 1993). Windfarms in areas around the Altamont Pass, the Tehachapi Mountains, and the San Gorgino Pass have more than 15,000 wind turbines (Pace 1991). The U.S. Department of Energy's (DOE's) Energy Information Administration (EIA) projects that the contribution of wind power will rise to 3600 MW(e) in 2000 and 6300 MW(e) in 2010, all of which would be generated by nonutilities (DOE/EIA-0561).

A recent survey of utilities conducted by UDI/McGraw-Hill indicated that no utilities have announced plans to construct 25 MW(e) or larger wind power plants in the foreseeable future, although some utilities may have unpublished plans (Bergesen 1994). Wind technology can be advanced with many small improvements, as well as larger ones such as development of lighter, stronger blade materials; improved gearing to capture a greater portion of useful wind velocities; improved understanding of wind patterns and siting configurations for wind turbines at a site; and improved electrical storage capabilities (SERI/TP-260-3674).

Wind energy is expected to require the use of approximately 61,000 ha (150,000 acres) or 610 square km (about 235 square miles) of land to generate 1000 MW(e) of power (see Table 8.1 for construction impacts and references). This large land requirement, even in dispersed sites, would eliminate any possibility of co-locating a wind energy facility with a retired nuclear plant, thereby pointing to the need for greenfield siting (siting on undeveloped land). The relatively low capacity factor of wind power means that it would operate less frequently at full power than nuclear, but the impacts associated with land use would still occur. The earth-moving that might be required to clear such a large amount of land would destroy much of the natural environment in affected areas (e.g., coastal, mountainous, or plains), where wind velocities are highest. Erosion and sedimentation, while controllable, would still occur and would adversely affect land and water resources. The visual impact of such extended land clearing would be quite

Figure 8.1 U.S. wind energy resources (contiguous states, winds 13 miles per hour or greater).
Source: Adapted from DOE/EIA-0561.

noticeable and would be a negative aesthetic consequence. Short-term air quality impacts from fugitive dust and equipment exhaust would occur with such extensive activities, and considerable vegetation debris could require disposal. Disturbance of such a large amount of land likely would reveal cultural resources that would require protection. Each of these site impacts would be magnified because of the new transmission lines that are almost always required for greenfield sites. Agricultural land could also be committed to the siting of wind energy facilities in some areas. Adverse impacts could still occur where land is taken out of production, but the acreage lost would likely be less than with natural environments.

The projected impacts of operating wind energy facilities are less than those expected from construction (see Table 8.2 for operational impacts and references). The same amount of land would still be committed to wind generation, but the machines would occupy less than 10 percent of it, freeing up most of the remainder for agricultural or some other compatible use. The aesthetic impact of several thousand wind turbines over a large area likely would strike many observers as obtrusive. The noise from such equipment likely would reinforce these negative opinions. Birds are likely to collide with the turbines, and wind energy developers should consider migration areas and nesting locations when sites for wind energy facilities are selected. In terms of positive environmental impacts, wind power plants would have little effect on water and air quality and would generate very little waste. Human health, except for a potential small number of occupational injuries, would not be affected by operations.

8.3.2 Photovoltaic Cells

PV cells, solid-state devices composed of a thin layer of semi-conductor material (usually single-crystal silicon), convert sunlight directly into electricity. Groups of cells that are mounted on a rigid plate and interconnected to form PV modules have a peak generating capacity of 50 W each (DOE/EH-0077). Usually, groups of modules are permanently attached to a frame and interconnected to form PV arrays or power systems. Power production is proportional to the amount of solar radiation received in a specific geographic area.

The most promising geographic area for the expansion of PV systems is the West; the Midwest and South have some potential (Figure 8.2).

PV power is produced intermittently because solar cells generate electricity only when sunlight is available. The National Association of Regulatory Utility Commissioners indicates an estimated capacity factor of 25 percent (Hamrin and Rader 1993). The largest utility PV system in the United States was built in 1984 on Carrisa Plain in central California by ARCO Solar at a site owned by Pacific Gas and Electric Company (Firor et al. 1993). Until it was dismantled in 1990, it generated 6.5 MW(e) of peak power. Thirty utilities were experimenting with small, grid-connected PV systems as of 1991 (Firor et al. 1993). Use of PV cells for baseload capacity requires very large energy storage devices, such as pumped hydro facilities, batteries, or compressed air chambers. Currently available energy storage devices are too expensive to store sufficient electricity to meet the baseload generating requirements. Thus, while the resource is plentiful, the reserves that

Figure 8.2 Solar resource availability: annual average daily direct normal solar radiation.
Source: Adapted from DOE/EIA-0561.

currently can be tapped economically for generating electricity in plants of appreciable size are limited.

The high cost of PV systems has been the primary impediment to their more extensive use. These high costs reflect the technical barriers that PV technology must overcome to be competitive. Improvements such as more effective concentrators, use of more easily produced thin-film PV cells rather than silicon cells, and lower module costs could play some part in reducing PV costs. Energy storage technology must become considerably less expensive to enable intermittent technologies like PV to provide reliable electricity. EIA projects that almost no additional PV generating capacity will be added to the electricity grid by 2010, its longest-term forecast (DOE/EIA-0561).

Construction impacts to several resources would be substantial from building a 1000-MW(e) PV facility either at a single site or at numerous smaller dispersed sites. The large land requirement would rule out co-locating a PV facility

with an existing nuclear plant, which requires far less land. In addition to these new land requirements, additional land would be required for new transmission lines. No PV plant of this size currently exists, and impacts must be inferred from smaller PV facilities. It is estimated that at least 14,000 ha (35,000 acres) or about 130 km^2 (50 square miles), either at a single site or at multiple sites, would be needed in areas optimal for PV technology to be able to generate as much as 1000 MW(e) of power.Clearing and grading 14,000 ha (35,000 acres) would largely destroy the previous natural or agricultural environment for the life of the facility, with resulting potential impacts to any threatened and endangered species and to aesthetic qualities of the area. Such construction likely would create erosion and resulting stream sedimentation problems. Considerable vegetation debris probably would need to be disposed of as well, which could create short-term air quality problems if it were disposed of through open-air burning. In an area this large, construction impacts to cultural resources would be likely to occur. No work force projections are available for constructing a large PV facility. If prefabricated components and a modular construction approach were used, the work force would probably be smaller than for nonrenewable central generating stations. Such a work force would result in fewer socioeconomic impacts in the form of jobs and local purchases, but the severe impacts of large work forces affecting small communities probably could be avoided.

Adverse operating impacts of PV facilities are associated with the large land requirements. All of the 14,000 ha (35,000 acres) would be lost to other uses for the life of the plant because the land would be covered with PV arrays. Impacts associated with loss of wildlife habitat or agricultural lands would occur, and erosion could develop without proper controls. Water quality could be adversely affected from runoff from PV arrays and drainage unless site engineering included mitigative measures. Substantial visual impacts created from land clearing would be continued in a different form by the extensive PV arrays covering the landscape. The socioeconomic benefits flowing to host communities would be considerably less with PVs than from baseload nonrenewable generating technologies because work forces and plant expenditures would be much less. Tax revenues could be fairly substantial, however, if PV capital costs were comparable to nuclear and fossil plant costs and resulted in correspondingly high assessed values. Other impacts, including those to air quality, solid wastes, and human health, either would not occur or would be small.

8.3.3 Solar Thermal Power

Solar thermal conversion systems use reflective materials to concentrate sunlight to heat a fluid that runs a turbine. Both central-receiver and distributed-receiver systems have been used. The parabolic trough, an example of a distributed receiver system, is used in the only large-scale [354-MW(e)] commercial solar thermal power program in the United States, the Luz International facilities located at several sites in the Mojave Desert in California. The Luz facilities, which consist of nine thermal plants [one 13.8-MW(e) unit, six 30-MW(e) units, and two 80-MW(e) units], use natural gas as a backup fuel for generating steam on cloudy days and at night. The company filed for bankruptcy in 1991 because of lower fossil fuel prices and reduced incentives for renewable technologies (DeLaguil et al. 1993). DOE and a consortium of 12 other organizations are retrofitting Solar One, a 10-MW(e) central receiver pilot plant near Barstow, California. It is to come on-line in 1995, renamed Solar Two, and will use a molten-salt heat transfer medium instead of the original oil system to collect and store heat energy. Developers hope that commercial versions of this new Solar Two technology can operate at capacity factors of 60 percent and thus provide dispatchable rather than intermittent power. Based upon solar energy resources (Figure 8.2), the most promising region of the country for this technology is the West.

Solar thermal systems have constraints similar to those of PV systems in that capital costs are higher than for nonrenewable resources, and solar thermal systems lack baseload capability unless combined with natural gas backup. The use of purely solar thermal systems for baseload capacity requires very large amounts of energy storage, such as pumped hydro facilities, compressed air chambers, or batteries. Capacity factors are estimated to be between 25 and 40 percent for future solar thermal plants (Hamrin and Rader 1993). Except for a few older units, most nuclear and baseload coal units generate between 200 and 1000 MW(e) of baseload power and have reached average capacity factors of 65 percent or better in recent years (OTA 1993a).

The construction impacts of building a solar thermal central generating station would stem from the amount of land required to generate 1000 MW(e) of electricity. About 6000 ha (14,000 acres) or 57 km^2 (22 square miles) of land

would be cleared either at one site or at multiple locations, with the resulting destruction of whatever wildlife habitat or agricultural values the land provided. A greenfield site or sites, along with new transmission lines, probably would be required because few existing facilities would have sufficient land for such an endeavor. The visual impact of such clearing, even in desert landscapes where solar thermal technology is most competitive, would be regarded by many observers as an obvious negative aesthetic impact. Potential impacts to cultural resources could be considerable because of the large amount of land affected, and care would need to be taken to identify such resources before construction. Some erosion and sedimentation would likely occur during land clearance. Considerable short-term impacts to air quality would occur from dust and vehicle exhaust, and vegetation and other debris would require disposal, perhaps through on-site burning. As with PV technology, the size of the construction work force that would be needed is unknown, but it could be reduced through the use of prefabricated components and a modular construction approach. Adverse socioeconomic impacts could be reduced in this fashion.

The operating impacts of a large solar thermal facility also would revolve around land resources dedicated to the plant. No other uses would be compatible since the solar thermal collectors would take up most of the space. Construction-initiated adverse aesthetic impacts and habitat losses and any accompanying risks to threatened and endangered species would continue. There should be few operating impacts to air quality, human health, solid waste, and cultural resources. Water quality should not be affected unless water were used as a cooling agent in an arid environment where it is in short supply or water runoff from the collectors were uncontrolled and sedimentation damaged water bodies. Socioeconomic benefits should be small compared with those going to host communities of large nonrenewable generating stations. Work forces and local purchases would be small. However, the likely high cost--and high assessed value--of solar thermal facilities could lead to substantial property tax revenues.

8.3.4 Hydropower

Currently, the largest electricity contribution from renewable resources is from hydropower. In 1990, conventional hydroelectric plants generated 28 billion kWh of electricity or 83 percent of electricity generated by renewable technologies and about 9.5 percent of electricity generated by all technologies. Hydropower makes up 10 percent of this country's generating capacity. This percentage is expected to decline because new hydroelectric facilities have become difficult to site as a result of public concern over flooding, destruction of natural habitat, and destruction of natural river courses. Hydropower has an average capacity factor of 46 percent, placing it in the middle of the range for renewable technologies (DOE/EIA-0561). Of all renewable and nonrenewable energy resources, hydropower has the fewest resources at 986 quads per year, of which 157 quads are accessible at some cost and 58 quads, or about 6 percent, constitute reserves that are recoverable at current costs (DOE/EIA-0561). Figure 8.3 shows both developed and undeveloped hydropower generating capacity as of January 1992, according to the Federal Energy Regulatory Commission (DOE/EIA-0561).

Impediments to the development of hydropower capacity include environmental concerns and licensing requirements. New dam safety criteria also have affected development. Although it is unlikely that many hydroelectric dams will be constructed in the future, some measures can be taken to increase electrical generation. Older turbines and generators can be upgraded and refurbished. New equipment--such as variable-speed, constant-frequency generators--is being developed which would allow turbines to operate at higher efficiencies (SERI/TP-260-3674).

Although the amount varies, large-scale hydroelectric plants of 1000 MW(e) or greater require an average of almost 400,000 ha (1 million acres). Additional land would be required for transmission, as

Figure 8.3 U.S. conventional hydroelectric generating capacity, developed and undeveloped (gigawatts).
Source: Adapted from DOE/EIA-0561.

the sites likely would be new. Wildlife habitat would be lost for terrestrial and free-flowing aquatic biota, and additional habitat would be created for some aquatic species. Associated with the loss of land would be some erosion, sedimentation, dust, equipment exhaust, debris from land clearing, probable loss of cultural artifacts, and aesthetic impacts from land clearing and excavating. The construction work force would be fairly large, and socioeconomic

impacts likely would be substantial, especially if the dam were constructed in a remote area where inmigrating workers would burden local public services.

Operating impacts from hydroelectric dams are associated predominantly with land and water resources. Land that once was lived on, farmed, ranched, forested, hunted, or mined would be submerged under water indefinitely. The original land uses would be replaced by electricity generation and recreation and, perhaps, residential and business developments that take advantage of the lake environment. Changes in water temperature, currents, and amount of sedimentation would produce a different aquatic environment above and below the dam. Alterations to terrestrial and aquatic habitats could change the risks to threatened and endangered species. Although the hydroelectric dam would create no air quality or solid waste impacts during operation and could serve as a protector of property and lives in preventing floods, lake recreation would likely bring with it a number of drownings and cause water pollution during the facility's operation.

8.3.5 Geothermal

Potentially recoverable geothermal resources are located in the upper 10 miles (16 km) of the earth's crust. These resources exist in the form of hot vapor (steam) or liquid (hydrothermal), geopressurized brines, or hot dry rock. Hydrothermal is the only resource used by current commercial technology. EIA estimates that about 1.5 million quads per year of geothermal resources exist in the United States; however, only about 22,800 quads are accessible and, of these, only approximately 250 quads per year can be economically developed today (DOE/EIA-0561). In 1990, geothermal resources contributed 0.32 quad of primary energy in the western United States. The net geothermal generating capacity in the United States is projected to grow from 15 billion kWh in 1990 to about 60 billion kWh in 2010. In comparison, one 1000-MW(e) nuclear plant operating at 60 percent capacity generates 5.26 billion kWh annually (DOE/EIA-0561). Geothermal has a high capacity factor of approximately 90 percent and can be used to provide reliable, baseload power. A geothermal electricity generating facility consists of a conversion well that brings the geothermal resources to the surface, the conversion system that produces useful energy from the resource, and the injection well that recycles cooled brine back to the underground reservoir (SERI/TP-260-3674).

As shown in Figure 8.4, geothermal plants may be located in the western United States, Alaska, and Hawaii where hydrothermal reservoirs are prevalent. The discrepancy between the vast amount of resource projected to be available (1.5 million quads per year) and projected usage is due primarily to technological problems. Although geothermal plants offer alternative baseload capacity to conventional fossil fuel and nuclear plants, widespread application of geothermal

Figure 8.4 U.S. known and potential geothermal energy resources. *Source:* Adapted from DOE/EIA-0562.

energy is constrained by the geographic availability of the resource and the maturity of the technology. The maximum size of geothermal power plants, in their present state of development, is about 110 MW(e) per unit. Geothermal plants, however, could be sited as modular units that would allow for larger generating capacities.

Construction impacts of a geothermal facility would result primarily from disturbance of land to support the large number of geothermal wells and the power plant needed to produce electricity equivalent to that from a 1000-MW(e) plant. Excluding new transmission corridors, which would add to most impacts, an estimated 2800 ha (7000 acres) would be needed even though the generating facility or facilities would only occupy around 25 ha (60 acres). This amount of acreage having appropriate geothermal resources would require a greenfield site or sites, which would imply altering current land uses of farming, ranching, forest, or natural habitat. Clearing this land would damage or destroy much of the existing habitat for wildlife, as well as pose potential adverse consequences for cultural resources. Aesthetic impacts would include extensive vegetation removal and earth moving. Soil erosion and stream sedimentation likely would result in some degree from the early clearing operations. Fugitive dust and exhaust fumes from heavy equipment would reduce air quality temporarily. The moderate-sized work force would create some community impacts, particularly if affected communities were small and had little service infrastructure to accommodate workers who might move into a rural environment to build the plant. Operating impacts would involve those resources most closely associated with the land disturbed in constructing the geothermal facility. Some of the

land originally cleared for construction of the geothermal facilities could probably be returned to previous uses, since it would not all have geothermal facilities located on it. Much acreage would still be lost for the life of the plant, however, and this loss could be complicated by subsidence caused by withdrawal of the geothermal fluid. Loss of habitat, impacts to threatened and endangered species, and visual impacts could be mitigated partially by returning much of the land to, or even leaving it in, its original condition. Surface water and groundwater quality could be impacted adversely if waste fluids from wells escaped into the ground water or surface streams or ponds. In addition various toxic gases such as ammonia, methane, and hydrogen sulfide and trace amounts of arsenic, borax, mercury, radon, and benzene would be released to the atmosphere. Noise impacts could be a problem for residents living on the edge of a geothermal site. Socioeconomic impacts should be positive with substantial tax revenues and a considerable number of jobs accruing to local taxing jurisdictions from a geothermal plant.

8.3.6 Wood Waste

The 2.4 quads per year of waste wood energy consumed in the United States generally is apportioned among the following sectors: industrial heat and power--1.6 quads (66 percent), residential space heating--0.8 quads (33 percent), and electric utilities--0.01 quads (1 percent). Industrial wood energy is used in a variety of process heat and cogeneration applications. Nearly half of that wood energy is used in boilers, a little over 40 percent in cogeneration (steam and electricity), and the remainder as process heat. Much of the electricity produced by the industrial sector is sold to utilities. These nonutility generators, along with independent power producers, generated about 31 billion kWh in 1990 from 6 GW(e) of installed wood- and wood-waste-fired capacity. By 2010, installed capacity is expected to increase to over 8 GW(e) and net generation to nearly 60 billion kWh (DOE/EIA-0561).

Wood waste is a sub-category of biomass energy. The category can include residues from forest clearcut and thinning operations, non-commercial tree species, harvests of forests for energy purposes, and wastes from forest product milling operations. The costs of these fuels are highly variable and very site-specific. Costs can be very low if the fuels are collected as part of commercial timber harvest operations or as residues from milling operations. Costs are higher if the biomass has to be collected and removed after forest harvest and thinning operations.

In addition to the costs of competing fuels, many factors affect the viability of wood waste power production. Among the factors influencing the costs of forest residues and wastes are the costs of collecting (harvesting), hauling, storing, and handling feedstocks; fuel characteristics (quality, reliability and variability of supply); levels of economic activity that affect waste generation; technological change in waste generation processes and development of competing uses (e.g., wafer board); and environmental considerations and restrictions as influenced by public perceptions, access, and environmental factors. Because mill wastes are concentrated, uniform, and often of high quality, they are highly desirable for non-energy uses and products. They are becoming fully utilized by forest products and pulp/paper industries, and there is limited availability for energy uses.

Nearly all of the wood-energy-using electricity generation facilities in the United States use steam turbine conversion technology. The technology is relatively simple to operate and it can accept a wide variety of biomass fuels. However, at the scale appropriate for biomass, the technology is expensive and inefficient. Therefore, the technology is relegated to applications where there is a readily available supply of low-, zero-, or negative-cost delivered feedstocks.

The low efficiency of wood-fired power plants, relative to modern coal-fired plants, is due in part to the use of more moderate steam conditions. Biomass steam-turbine plants use lower pressures and temperatures because of the strong scale-dependence of the unit capital cost (dollars per kilowatt). Building biomass plants at modest scales [<50 MW(e)] makes economic sense when conversion facilities have a nearby, reliable supply of low-cost wood wastes and residues. Conversion efficiencies of wood-fired power plants that are being built today are in the 20-25 percent net efficiency range (DOE/CH100093-152). These facilities usually provide baseload power and operate with capacity factors of around 70-80 percent.

Removal of logging slash and forest thinnings may be environmentally significant, particularly when 160,000 to 320,000 ha (400,000 to 800,000 acres) could be affected to support a large wood waste plant. Forest residues left on-site help to create habitat for animals and provide nutrients to forest soil. The presence of forest slash and thinnings can

also serve to lessen soil erosion and its concomitant impacts. Forest residues are therefore important to ecosystems, and they must be carefully guarded from overuse (OTA 1993b).

Plant construction impacts should not be significant if the plants are properly sited and designed (ECO Northwest et al. 1986). The overall level of construction impact should be approximately the same as that for a coal-fired plant, although wood-waste-fired facilities will be built at smaller scales. Like coal-fired plants, wood-waste plants require large areas for fuel storage and processing and involve the same type of combustion equipment.

Emissions during plant operations are CO, oxides of nitrogen, SO_x, PM, and CO_2. Relative to coal and other primary fossil-fuel sources of electricity, wood-fired electricity generation has very low levels of SO_x emissions because wood contains very little sulfur. There are also reduced emissions of oxides of nitrogen. The major emissions from wood-fired generation involve the release of particulate matter. However, these emissions are controlled effectively with existing technology. Emissions to land and water resources are associated with soil disturbance and runoff and the disposal of ash. However, ash disposal is not a major concern from wood combustion and the ash may be beneficial as a fertilizer and soil conditioner provided the pH is not excessively high.

8.3.7 Municipal Solid Waste

MSW differs from other biomass energy sources because utilization is primarily a waste management decision, and increased use of MSW is likely to be driven by costs of disposal (i.e., higher tipping fees and reduced landfill space) rather than by energy considerations. Currently, about 15 percent of the MSW produced in this country is burned to produce heat and power. In 1990, MSW was used to generate 10 billion kWh from 2 GW(e) of installed capacity (DOE/EIA-0561). Electricity generation from MSW is projected to grow to 54 billion kWh by 2010 with 11 GW(e) of installed capacity (DOE/EIA-0561).

Population and economic growth, reduced availability of landfill space, and increasing tipping fees are creating strong incentives to reduce the size of the waste stream, change its composition, and find alternative uses, such as energy. However, numerous obstacles and factors may limit the growth in MSW power generation. Chief among them are environmental regulations and public opposition to siting MSW facilities. Others include voluntary recycling, state laws mandating reductions in the MSW going to landfills, efforts to limit packaging, prohibitions against yard wastes and construction and demolition wastes in landfills, and changes in the heat content of MSW given the fate of plastics and wood in waste streams.

MSW conversion facilities use basically the same steam-turbine technology found at wood waste facilities. However, installed capital costs are much greater because of the need for specialized MSW handling and waste separation equipment and stricter environmental emissions controls. MSW facilities typically have high capacity factors (85-90 percent) and provide baseload power.

MSW combustion is a waste disposal option for communities that lack landfill space. Since MSW must be collected regardless of whether it is used for power production, impacts associated with collection and transport are not considered here. The environmental impacts that are relevant are those associated with combustion compared with the actual landfilling of the wastes. Among the more important environmental tradeoffs are decreased landfill requirements and possible improvements in groundwater quality (leachate minimization) versus decreased air quality from MSW combustion (ECO Northwest 1986).

MSW-fired facilities are usually sited and constructed in industrial areas; the overall construction impact is not likely to be significant if plants are sited and built properly (ECO Northwest et al. 1986). Construction impacts are similar to those of coal-fired power plants in terms of the acreage disturbed.

Emissions from MSW combustion facilities include particulates, oxides of nitrogen, acid gases, metals, and organic compounds. These are potentially serious emissions; however, MSW facilities are required to operate with much

stricter controls than biomass facilities burning wood and wood wastes. Odors are also a potential impact from MSW combustion. MSW facilities face much public opposition, and siting can be especially problematic.

8.3.8 Energy Crops

Expanding biomass-fired power generation capabilities beyond the size of the waste resource base requires the use of dedicated feedstocks or energy crops (Wright 1994; Hohenstein and Wright 1994). Energy crops appropriate for combustion and power production include short-rotation woody crops (e.g., poplar) and perennial herbaceous crops (e.g., switchgrass). Woody crops typically consist of plantations of closely spaced trees that are harvested on a cutting cycle of 3-10 years. The trees are not managed intensively, requiring only weed control in the first 2-3 years of growth and some fertilization. Woody crops have been developed that produce yields two to three times greater than those achieved by traditional forest management. Growing herbaceous crops is similar to growing hay. They are managed similarly to hay; however, yields are much higher. As with other biomass energy feedstocks, projected energy costs are very site specific and depend greatly on realized yields.

Biomass power based on energy crops and current conversion technology generally is not currently competitive with fossil-fired alternatives in terms of generating costs. The competitiveness of generating electricity from energy crops can be improved by developing conversion technologies that offer higher efficiencies and lower unit capital costs at modest scales appropriate for biomass. One technology under development and testing that offers higher conversion efficiency is Whole Tree Energy (*WTE*®) technology (Lamarre 1994). WTE® is an innovative steam turbine technology that uses an integral fuel drying process. Waste heat, produced by the flue gas at 54° C (130° F), is used to dry wood stacked in a large, air-inflated building for 30 days before it is conveyed to a boiler and burned. Allowing the waste heat to dry the wet whole-tree fuel can result in net plant efficiencies comparable to those of a modern coal-fired plant (35 percent). WTEÔ also reduces wood harvesting and handling costs as well as the need for equipment such as hammer mills, screens, and chippers that is used for reducing the size of the wood feedstock.

According to some experts, the most promising technologies for wood-fired power generation lie in the development of gas turbine cycles (Williams and Larson 1993). Gas turbines (or Brayton cycles) have already been developed for natural gas and clean liquid fuels. A key advantage of gas turbine technology is the potential for substantially reduced capital costs, which are relatively insensitive to scale, higher conversion efficiencies (upwards of 45 percent), and greater modularity. Adapting the technology for biomass (i.e., biomass-gasifier/gas turbine--BIG/GT) would require the use of a gasifier to thermochemically convert wood to a gas. The resultant gas would then be cooled and cleaned before being burned in a gas turbine. There are a number of technology choices for both gasification and power generation, ranging from simple cycle gas turbines to gasifier combined cycles and gasifier intercooled steam-injected cycles.

The net environmental impacts of growing energy crops depend on the type of land they occupy and the uses they displace. Energy crops are currently being targeted as alternatives to conventional agriculture. With surpluses in cropland projected, energy crops are seen as a potentially important alternative crop to conventional agriculture. The displacement of certain agricultural row crops (e.g., corn and soybeans) with trees might result in a positive net change in environmental impacts, especially on erosive sites. The production of wood in managed plantations would be much less erosive than row crop production, and the amounts of fertilizers and pesticides used would be much smaller. The conversion of pasture land to tree production might increase soil erosion as trees were being established. However, runoff containing nutrients from animal wastes would not be present. Perhaps the strongest environmental argument for energy crops is the potential to reduce net greenhouse gas emissions by providing a substitute baseload generation source for fossil fuels (Wright 1994).

Plant construction and operating impacts would be identical to those associated with wood-waste-fired facilities.

8.3.9 Coal

Coal-fired steam electric plants provide the bulk of electric generating capacity in the United States, accounting for about 56 percent of the electric utility industry's net generation and 43 percent of its capacity in 1992 [(DOE/EIA-0383 (94)]. EIA projects slight changes in these percentages to 58 percent and 42 percent, respectively, by 2010. Conventional coal-fired plants generally include two or more generating units and have total capacities ranging from

100 MW(e) to more than 2000 MW(e). Domestic coal resources are estimated at over 87,000 quads of energy, of which about 38,000 quads constitute accessible resources and 5,300 quads are reserves that can be cost-effectively recovered today. Total U.S. coal consumption in 1990 was about 19 quads, which leads to the conclusion that coal is likely to continue to be a reliable energy source well into the future (DOE/EIA-0561), assuming environmental constraints do not cause a gradual substitution of other fuels.

DOE has encouraged the increased use of coal by electric utilities through its cost sharing of clean coal projects to develop and demonstrate advanced technologies that reduce atmospheric emissions of coal combustion pollutants and improve the environmental acceptability of coal. A description of 22 generic clean coal technologies considered by DOE in the Clean Coal Technology Program, which is being terminated, is provided in DOE/EIS-0146.

A window of opportunity for clean coal technologies may occur in the late 1990s as a result of the aging of currently operating coal-fired power plants and passage of the Clean Air Act Amendments of 1990 (CAAA) and Energy Policy Act of 1992 (EPACT). Utilities will be considering the option of constructing replacement plants, extending the life of existing coal-fired plants, purchasing additional pollution allowances, or even buying electricity from other sources. Repowering is an important alternative that is discussed in Section 8.3.13. It is quite cost effective, increases plant capacity, and offers various financial and institutional benefits under the CAAA and EPACT that enhance a utility's competitiveness (Norton and Gottlieb 1993). With repowering, a utility replaces an obsolete steam generator with an advanced coal technology, such as an atmospheric fluidized-bed boiler or an integrated coal-gasification/combined-cycle (Bretz 1994). To date, utilities have responded to CAAA's SO_2 emissions goals by adding scrubbers and burning a higher proportion of Western low-sulfur coal rather than purchasing pollution allowances, thereby resulting in lower SO_2 emissions (Bohi 1994). DOE also forecasts that by the year 2010, advanced coal technologies--if successfully applied--could have the capability to reduce national CO_2 emissions by 5 to 12 percent (DOE/EIS-0146).

The United States has abundant low-cost coal reserves, and the price of coal for electric generation is likely to increase at a relatively slow rate. Even with recent environmental legislation, new coal capacity is expected to be an affordable technology for reliable, near-term development and for potential use as a replacement technology for retired nuclear power plants.

The environmental impacts of constructing a typical coal-fired steam plant are well known because coal is the most prevalent type of central generating technology in the United States. The impacts of constructing a 1000-MW(e) coal plant at a greenfield site can be substantial, particularly if it is sited in a rural area with considerable natural habitat. An estimated 700 ha (1700 acres) would be needed, and this could amount to the loss of about 8 km^2 (3 square miles) of natural habitat and/or agricultural land for the plant site alone, excluding that required for mining and other fuel cycle impacts. Ecological impacts could be large, and important cultural sites could be encountered, particularly near rivers. With this much land being cleared, some erosion and sedimentation would be expected. Considerable fugitive dust emissions would affect air quality temporarily, and the quantity of construction debris also would be substantial. Aesthetic impacts from such a large construction effort in a rural area could be substantial. Socioeconomic impacts at a rural site would be larger than at an urban site because more of the 1200-2500 peak work force would need to move to the area to work. Such impacts are worst at very remote sites where accommodations may be nonexistent and the large majority of workers must move to work on the plant. Transmission line impacts would add to virtually all these impacts. Siting a new coal-fired plant where a nuclear plant is located would reduce many construction impacts, thereby reducing the initial damage to the environment and eliminating the need for new transmission lines. Such co-locating would depend on factors such as location of load centers, environmental restrictions, and site characteristics.

Operating impacts of new coal plants would be substantial for several resources. Concerns over adverse human health effects from coal combustion have led to important federal legislation in recent years, such as the CAAA. Although the situation appears to be improving, health concerns remain. Air quality would be impacted by the release of CO_2, regulated pollutants, and radionuclides. Public health risks such as cancer and emphysema are considered likely results. CO_2 has been identified as a leading cause of global warming. SO_2 and oxides of nitrogen have been identified with acid rain. Substantial solid waste, especially fly ash and scrubber sludge, would be produced and would require

constant management. Losses to aquatic biota would occur through impingement and entrainment and discharge of cooling water to natural water bodies. Socioeconomic benefits can be considerable for surrounding communities in the form of several hundred jobs, substantial tax revenues, and plant spending.

An estimated 8,900 ha (22,000 acres) for mining the coal and disposing of the waste could be committed to supporting a coal plant during its operational life. Air quality impacts from fugitive dust, water quality impacts from acidic runoff, and aesthetic and cultural resources impacts are all potential adverse consequences of coal mining. Socioeconomic benefits from several hundred mining jobs and tax revenues would also accompany the coal mining.

8.3.10 Natural Gas

Natural gas supplied 9.4 percent of this country's net electric utility generation in 1992 and is projected to supply 11.4 percent of electricity in 2010 [DOE/EIA-0383(94)]. Domestic natural gas resources are estimated at 1,700 quads, of which approximately 900 quads are accessible resources and about 230 quads are reserves that currently can be recovered cost-effectively (DOE/EIA-0561). Most of the supply in the continental United States is located in Texas, Louisiana, Oklahoma, New Mexico, and Kansas, locations favored for gas-fired plants because of relatively low gas prices. Although natural gas reserves are fairly large, much of the resource is located in remote areas that are not served by a pipeline infrastructure connected to high-demand centers.

The natural gas fuel cycle consists of exploration/extraction (drilling and production), processing, transportation by pipelines, end use, and waste management. Utilities receive gas at power plants through pipelines on a continuous basis.

Natural gas is used in three technologies: conventional steam, gas-turbine, and combined-cycle. In conventional steam plants, the traditional gas-fired technology, natural gas is burned to produce steam. The process is very similar to that used for coal and oil technologies. Because natural gas can be used more efficiently in gas-turbine and combined-cycle facilities than in a conventional steam plant, the latter technology is no longer being used for new generating stations. In gas-turbine plants, gas (or distillate oil) is burned to produce an exhaust gas that drives the turbine. Combined-cycle plants, which are particularly efficient and are used as intermediate and baseload facilities, combine the gas-turbine technology with a heat recovery system that powers a steam cycle [DOE/EIA-0383(94)]. These combined-cycle systems represent the large majority of the total number of plants currently under construction or planned in the United States. Most of the plants are small and have proved to be popular with nonutility generators (Bergesen 1994). Those using combined-cycle technology can qualify as Public Utility Regulatory Policies Act of 1978 (PURPA) plants if they are no larger than 80 MW(e) and operate as cogenerators.

Most environmental impacts of constructing natural-gas-fired plants should be approximately the same for steam, gas-turbine and combined-cycle plants. These impacts, in turn, generally will be similar to those of other large central generating stations. Land-use requirements for gas-fired plants are small at 45 ha (110 acres) for a 1000-MW(e) plant; thus land-dependent ecological, aesthetic, erosion, and cultural impacts should be small unless site-specific factors should indicate a particular sensitivity for some environmental resource. Siting at a greenfield location would require new transmission lines and increased land-related impacts, whereas co-locating the gas-fired plant with the retired nuclear plant would help reduce land-related impacts. Socioeconomic impacts should not be very noticeable because the highest peak work force of 1200 for steam plants is small for a central generating technology, and gas-fired plants are not usually sited in remote areas where community impacts would be most adverse. Also, gas-fired plants, particularly combined cycle and gas turbine, take much less time to construct than other plants.

The environmental impacts of operating gas-fired plants are generally less than those of other fossil fuel technologies of equal capacity. Consumptive water use is about the same for steam plants as for other technologies. There are potential impacts to aquatic biota through impingement and entrainment and increased water temperatures in receiving water bodies. Water consumption is likely to be less for gas-turbine plants. Generally, air quality impacts for all natural gas technologies are less than for other fossil technologies because fewer pollutants are emitted and SO_2, a contributor to acid precipitation, is not emitted at all. Solid waste should be minimal. The work force of 150 workers would be the lowest of any nonrenewable technology, as would local purchases and local tax revenues. Approximately 1500 ha

(3600 acres) of additional land would be required for wells, collection stations, and pipelines to bring the natural gas to the generating facility. Impacts would be typical of those associated with land clearance. Operational impacts should not be severe because most of the land would not be disturbed further once facilities were sited.

8.3.11 Oil

Oil-fired power production was 3.2 percent of the country's total net electricity generation in 1992 and is projected to decline to 2.3 percent by 2010 [DOE/EIA-0383(94)]. Domestic petroleum resources are estimated by the EIA at about 2,800 quads, of which about 1,100 quads are accessible at some price, and about 160 are recoverable at current costs (DOE/EIA-0561). In the 12-year period for which EIA has reported annual oil and gas reserves (1977 through 1988), year-end crude oil reserves decreased by 19.9 percent ([DOE/EIA-0216(88)].

The oil fuel cycle system involves exploration/extraction, processing, transportation, end use, and waste management. The production of electricity from oil combustion is accomplished by the same process used for coal and natural gas. Oil-fired plants provide peak, intermediate, and baseload capacity.

The economics, apart from fuel price, of oil-fired power generation are similar to those of natural gas-fired power generation. Distillate oil can be used to run gas turbines in a combined-cycle system; however, the cost of distillate oil usually makes this combined-cycle system much less competitive where gas is available. Oil-fired power generation has experienced a significant decline since the early 1970s. Increases in world oil prices have forced utilities to use less expensive fuels; however, oil-fired power generation is still important in certain regions of the United States.

Constructing a 1000-MW(e) oil-fired power plant would have the same environmental impacts as constructing other large central generating power stations. Relatively small land requirements of an estimated 50 ha (120 acres), however, would be expected to reduce other resource impacts that tend to follow land-use impacts: ecological, aesthetic, air quality, water quality, and cultural. As land-use requirements decrease, erosion, loss of habitat, and negative aesthetic impacts decrease as well, although very site-specific considerations occasionally enter the picture. Expected socioeconomic impacts should not be high because of the moderate size work force of 1700, and oil-fired plants typically are not sited in remote areas or otherwise away from larger communities that are on pipelines or near where the oil is refined, consumed, or imported. Transmission lines for a greenfield site likely would increase land-dependent impacts in approximate proportion to the transmission/generation acreage. Land-use related impacts could be reduced if the oil-fired plant were colocated with the retired nuclear plant.

Environmental impacts of operating oil-fired power plants are similar to those from comparably sized coal-fired plants. Since they typically use the same cooling systems, water use and related impacts to water quality and aquatic biota would be similar. Air emissions, too, would be typical of coal plants; regulated pollutants, CO_2, and small amounts of radionuclides would be emitted, although in lesser quantities than from an equivalent-size coal-fired plant. Moderate amounts of scrubber sludge would require disposal. Attendant impacts would include acid precipitation, global warming, and some increased risk of health problems, such as emphysema, cancer, and other illnesses associated with combustion of fossil fuels. Employment, tax revenues, and local purchases would be positive socioeconomic impacts for some local communities. Approximately 650 ha (1600 acres) of additional land would be needed for oil wells and support facilities that would provide the generating plant with fuel. Impacts would likely be similar to those of other land clearing activities. Operational impacts should not be severe because, as with gas, the land generally would not be disturbed once the wells were producing.

8.3.12 Advanced Light-Water Reactor

Section 2.1 describes a typical nuclear power plant and its operation. In 1992, nuclear power provided 22 percent of total United States net electric utility generation, a figure that is expected to decline to 18.8 percent by 2010. Nuclear power represented 14.3 percent of this country's 1992 electric utility generation capacity and is projected to decline to 12.2 percent by 2010 [DOE/EIA-0383(94)].

Current American research focuses on the advanced LWR as a viable replacement for existing nuclear plants. Advanced LWR technology differs from current LWR technologies primarily in component design, including passive

safety features that reduce the probability of severe accidents (NUREG-1362). Advanced LWRs would require slightly more fuel than current designs, resulting in slight increases in spent fuel generation and lower overall plant efficiencies. Future plants using the advanced LWR technology are expected to require smaller sites and shorter construction periods than current nuclear plants (NUREG-1362). They may also involve smaller, modular plants. The long hiatus in nuclear plant starts is not expected to end soon, however, even with advanced LWR technology, and the EIA projects that no new nuclear plants will be added by 2010 [DOE/EIA-0383(94)].

The environmental impacts of constructing an advanced LWR nuclear plant are expected to be equivalent to the impacts of building any large energy facility. Impacts could be moderated somewhat if the plant were built at a current nuclear plant site rather than at a greenfield site because the prevailing land use would be compatible at the former site. Thus, building a plant on a greenfield site would produce more severe impacts.

Advanced LWRs require perhaps 200 to 400 ha (500 to 1000 acres) excluding transmission lines, which could add hundreds to thousands of ha depending upon the distance of the plant from connecting transmission lines or load centers. Destruction of wildlife habitat would occur, and threatened and endangered species would require special consideration to avoid adverse impacts. Erosion, sedimentation, fugitive dust, aesthetic intrusions, and disturbance to cultural artifacts would tend to be proportional to the amount of land disturbed, but site-specific considerations can enter the picture. Socioeconomic impacts from building a large, complex technology would be substantial. With a relatively large but currently unquantified peak construction work force, employment and local spending would benefit. Public services could be adversely affected if those services were operating at capacity previous to plant construction or if a relatively undeveloped remote community were impacted by a large number of inmigrating, temporary workers.

The environmental impacts of operating advanced LWRs would be similar to those of operating current nuclear plants except that slightly more radioactive waste would be generated and the potential for accidents should be reduced somewhat. The newer technology would have built-in safety features that would shut down the plant automatically and use natural forces to greatly reduce the possibilities that severe accidents could occur. Socioeconomic benefits for local communities normally associated with large energy facilities, including substantial employment, tax revenues, and local purchases, would also result from siting of an advanced LWR. Approximately 400 additional ha (1000 acres) would be committed to uranium mining and processing during the life of the advanced LWR. Impacts should be similar to those of other clearing and land-use operations associated with uranium mines and mills and would involve some adverse air and water quality impacts and health risks.

8.3.13 Delayed Retirement of Existing Non-Nuclear Plants

Another potential alternative to license renewal would be to continue to generate electricity from non-nuclear plants beyond the original date at which they were scheduled to shut down permanently. This alternative would have the effect mainly of substituting coal, gas, oil, or hydropower plants for nuclear facilities.

In recent years electric utilities have given considerable attention to the issue of repowering non-nuclear generating facilities. Repowering is the primary process by which utilities extend the life of their generating plants. It is comparable to refurbishing a nuclear plant. Since the average age of all types of fossil units is over 30 years, utilities have been exploring repowering older fossil units as a way of avoiding even larger capital outlays for new plants (Bretz 1994). As of March 1994, about 30 units with a total capacity of 3000 MW(e) had been proposed for repowering. Assuming regulatory environmental compliance and a successful application of lessons learned from federal clean coal technology demonstrations, DOE estimates that up to 248 GW(e) of generating capacity could be repowered or retrofitted with clean coal technologies by the year 2010 (DOE/EIS-0146). In 1991 DOE estimated that 2500 coal-fired plants were 30 years old or older (making them candidates for repowering) and that this total would rise to 3500 to 3700 in 1998. From a utility's perspective, not only might repowering be cost-effective; but also environmental goals, particularly improved air quality, could be easier to accomplish since improved, less polluting technologies would be installed during repowering.

Repowering involves a major rehabilitation of a generating facility and focuses on replacing the steam generator with an improved steam generating technology. Replacement technologies currently regarded as the most attractive

candidates include (1) gas-turbine/generator and heat recovery steam generator, (2) atmospheric fluidized-bed boiler, (3) integrated coal-gasification/combined cycle, and (4) pressurized fluidized-bed combustor/combined cycle. The first candidate, the most favored by utilities to date, is a natural gas technology and the last three are coal-fired technologies (Bretz 1994). The technologies could be sited anywhere in the country where fossil plants are located. Repowering efforts currently under way may produce increases in plant output of 20 percent or more, an improvement that amounts to a substantial increase in generating capacity.

Delaying the retirement of older fossil fuel plants (30 years old) would normally require that such plants be repowered if they are to operate long enough for them to be considered feasible alternatives to relicensed nuclear plants. Because repowering technologies are just being implemented, information about actual environmental impacts is only now becoming available.

The construction required to repower a coal or gas-fired plant would be substantial because much of the plant would be improved. For a large coal plant, the effort would be of the same general magnitude as that required to refurbish a nuclear plant. Gas-fired plants are less complex and would involve less work than coal plants. Little land would be affected that had not already been cleared and built upon in the initial plant construction. Consequently, ecological and cultural impacts would be negligible during repowering, as would impacts to air and water. Socioeconomic impacts would occur but would be smaller than during the original construction of the coal or gas-fired plants.

Major reductions in a plant's airborne emissions should be realized as the most important impact. DOE/EIS-0146 states, "Repowering opens the door to a future of sustained deep reductions in nationwide emissions of SO_2, one of the chief pollutants thought to contribute to acid rainfall" (p. 2-10). SO_2 reductions by conventional coal-fired plants would vary from 90 to 99 percent depending upon the specific technology. Similarly, oxides of nitrogen, one of the emissions associated with global warming, would be reduced between 60 and 92 percent from current emissions from conventional coal-fired plants. On the other hand, solid waste would be increased as the new technologies reduced air pollution by converting what would normally be an air pollutant into solid wastes (DOE/EIS-0146). Recent experience with repowered plants starting to come on line confirms SO_2 and oxides of nitrogen reductions of at least 90 percent in these technologies (Bretz 1994). Gas turbine/generators without heat recovery steam generators are expected to reduce oxides of nitrogen emissions by more than 90 percent. Land use, cultural resources, and socioeconomic resources should not be affected by repowering.

8.3.14 Conservation

A wide variety of conservation technologies could be considered as alternatives to generating electricity at current nuclear plants. These technologies could include hardware, such as more efficient motors in consumer appliances, commercial establishments, or manufacturing processes; more energy-efficient light bulbs; and improved heating, ventilation, and air conditioning systems. Also, structures could be weatherized with better insulation, weather stripping, and storm windows. These measures generally come under the heading of DSM, which is a collection of diverse measures to reduce customers' electricity consumption without adversely affecting service. Other conservation measures a utility could take would be to install more efficient equipment as it retrofits its power plants and improves distribution and transmission technologies. An average of 6.2 percent of an American utility's power is lost before reaching customers (Kelly and Weinberg 1993).

Conservation technologies and measures have proved to be popular with some utilities, public utility commissions and members of the public, who see them as a way of providing economical service while avoiding construction of more electric generating facilities. Increased competition within the utility industry and pressure from public utility commissions and public interest groups have forced utilities to consider conservation technologies as essentially new resources in the utility's portfolio of capabilities and invest in them as they would new generating sources. On a national scale (based on EIA electricity growth projections in DOE's National Energy Strategy and Electric Power Research Institute estimates of DSM savings in 1990), Hirst (1991) calculates that almost half of electricity demand growth from 1990 to 2010 could be eliminated with an "ambitious" DSM program. This growth would eliminate the need for an estimated 430 500-MW(e) power plants or an equivalent 215 1000-MW(e) nuclear plants (Hirst 1991). A

study of three New York utilities found that DSM programs could produce energy savings equalling 10-20 percent of each utility's projected demand in the years 2000 and 2008 (Nagel 1993).

Treating energy conservation measures as resource options received a major stimulus in the form of the EPACT, which amended the Public Utility Regulatory Policies Act of 1978 to require each utility to employ up-to-date integrated resource planning as a forecasting tool in cooperation with state regulators and the public. Under Sec. 111 (d)(19), integrated resource planning is defined as "a planning and selection process for new energy resources that evaluates the full ranges of alternatives, including new generating capacity, power purchases, energy conservation and efficiency, cogeneration and district heating and cooling applications, and renewable energy resources, in order to provide adequate and reliable service to its electric customers at the lowest system cost." A major barrier to implementing conservation technologies was the degree to which utilities could recover their costs and earn a profit while reducing growth in electric sales as opposed to selling more power. This barrier was removed under EPACT by ensuring that conservation investments were at least as profitable to utilities as investments in energy generation facilities [Sec. 111 (a)(8)].

Environmental impacts of electrical energy conservation programs are not well understood. The Pace report (1991) that surveyed literature assessing indoor air quality impacts of conservation programs, and a 1991 national conference with multiple government, utility, and environmental sponsors that investigated the environmental impacts of utility DSM programs (DSM and the Global Environment) are two noteworthy efforts to address such impacts. Environmental impacts of electrical energy conservation programs should fall into three categories: those resulting from energy demand reduction measures, those resulting from energy supply reduction measures, and those caused by fuel cycle activities.

Energy demand reduction measures are specific procedures or technologies that are undertaken to reduce energy demand. Indoor air quality is considered to be the potential impact of greatest concern from demand reduction technologies. Radon, formaldehyde, and combustion products from cigarette smoking and furnaces are the substances that appear to be the sources of most problems. Another area of concern is mercury used in fluorescent lights and polychlorinated biphenyls (PCBs) used in fluorescent light ballasts.

Pace's (1991) examination of the indoor air quality issue reached the general conclusion that, "there are no significant environmental impacts of DSM." Pace went on to argue that "weatherization programs by themselves are not a primary cause of indoor air pollution problems. Where problems do exist, mitigation measures are available." Pace also notes, however, that the U.S. Environmental Protection Agency warns that indoor air quality can be impaired if energy conservation measures override health considerations. The report also pointed out that a Bonneville Power Administration radon study found that radon was a serious concern in new home construction if mitigation measures were not built in. Cancer cases from radon were estimated to be 335 per 100,000 for baseline homes but as high as 767 cases per 100,000 for new homes with advanced infiltration control but no exhaust or mechanical ventilation.

Current research, according to Pace (1991), indicates that indoor air quality is highly site specific, and the levels of contamination existing before weatherization appear to be a major factor in determining post-weatherization pollution levels. In addition, research indicates that mitigation measures are available to correct problems. It should be noted that no studies have been completed to quantify pollutants associated with weatherization, and more research is called for.

As conservation technologies are implemented and growth in electricity demand is reduced, utilities should expect to build fewer power plants. Cost savings to electric utilities nationwide could be substantial. Hirst (1991) estimates that an ambitious 20 percent conservation-inspired reduction in total demand by 2010 could produce savings in fuel and capital of $370 billion and could reduce utility bills by $61 billion at a total cost to the utilities of $165 billion. Studies for specific utilities have identified savings either in terms of money saved or emissions eliminated. Although a utility might prefer to close a fossil-fired plant that is particularly costly or dirty to operate rather than close a nuclear power plant, the GEIS assumes that conservation technologies produce enough energy savings to permit the closing of a

nuclear plant. Should a nuclear plant be closed, the environmental gain, in terms of avoided environmental impacts, would be those discussed in Section 8.3.

The third category of environmental impact of electrical energy conservation programs is the resource recovery, processing, and manufacturing stages associated with producing conservation equipment or material, as well as impacts of disposing of the equipment or material. At this time little assessment has been undertaken of these stages. Resources used in producing conservation technologies are common to many manufacturing processes, and large amounts of resources would not be required. Disposal should involve normal procedures, and some benefits are likely over the long term as troublesome components of current technologies, such as PCBs and chlorofluorocarbons (CFCs) that require special handling, ultimately are eliminated from the waste stream and replaced by more benign components. The amounts of mercury and PCBs in lighting are considered to be small enough and disposal methods sufficiently effective that no adverse health effects should be experienced. Acceleration of CFC releases could occur as some appliances are disposed of earlier than anticipated, but this increase should abate as CFC replacements come on the market.

8.3.15 Imported Electrical Power

Although it is not a technology as such, imported electrical power from Canada or Mexico could constitute an alternative to renewing a nuclear plant's license. Electricity trading has existed between the United States and both countries for many years, and numerous transmission ties exist, particularly with Canada, to facilitate easy exchanges of power. The North American Electric Reliability Council (NERC) was established in 1968 to enhance electricity reliability between the United States and Canada and a small portion of northern Baja California in Mexico. Today this system operates essentially as a single power grid, albeit with limited power exchanges and varying prices (NERC 1993b).

Electricity trading between the United States and Mexico has been quite small, amounting in 1990 to about 2 billion kWh of power imported by the United States (Texas) and about 600 million kWh of power exported to Mexico [DOE/EIA-0531(90)]. [The annual electric generation of a 1000-MW(e) power plant operating at 60 percent capacity is 5.26 billion kWh; thus, 1990 imports from Mexico amounted to the equivalent of about 40 percent of a 1000-MW(e) plant.]

Electricity trading between the United States and Canada is considerably larger and involves exchanges along almost the entire boundary separating the countries. In 1990 American utilities purchased approximately 22.5 billion kWh of electricity [the equivalent of four 1000-MW(e) plants] and sold about 20.5 billion kWh to Canada. These figures exclude power that is exchanged at no cost between utilities in which power moves freely across the border in one direction and is replaced with an equal amount of power moving free of charge in the other direction [DOE/EIA-0531 (90)]. In 1990 the largest provincial exporter of power to the United States was British Columbia, which accounted for about 30 percent of the total. The largest provincial importer of power was Ontario, which accounted for almost two-thirds of the total Canadian imports from the United States.

Environmental impacts of importing electrical power to the United States in place of relicensing American nuclear plants should be similar to impacts of operating a mix of coal, hydropower, and nuclear power plants and the associated transmission lines in the United States. Projected capacity margins--essentially the amount of existing and planned generating capacity available for planned maintenance, unplanned electrical outages, and unforeseen growth in demand --are similar in both the United States and Canada, from which most imported power originates. U.S. capacity margins are projected at 20.6 percent of capacity in 1994 and 17.6 percent of capacity in 2002. Canada's capacity margins are projected to be 20.7 percent in 1994 and 16.3 percent in 2002 (NERC 1993a).

Canada's mix of generating technologies is considerably different from that of the United States, with hydroelectric power constituting over half of its capacity and coal constituting a distant second at about 20 percent. Nuclear power accounts for about 16 percent of Canadian capacity, or about the same as in the United States. Oil and gas combined make up only 10 percent of Canadian capacity, or slightly more than one-third the amount they account for in the United States. This mix of generating technologies is not expected to change appreciably through 2002 (NERC 1993a). Electrical power that is exported to the United States could originate almost anywhere in Canada, because the U.S.-

Canadian system is essentially a grid in which power can be transmitted to any location from any location. Since transmission is not free and line losses do occur, however, distance is a factor in determining transmission costs and thus feasibility.

Given the generating mix of Canadian power plants, one would expect that hydroelectric dams would be a principal source of exported power to the United States. This point is particularly true when new dam development on the James Bay in northern Quebec is factored into Canadian capacity. Coal and nuclear plants would provide approximately equal amounts of power that would not total the hydropower contribution to exported power. Thus, if environmental impacts of power imported by the United States are distributed among Canadian power plants according to their percentage of the total, environmental impacts of hydroelectric dams (Section 8.2.5) would be the most prevalent types expected. Hydroelectric development in James Bay has been an important environmental dispute in Canada for quite some time, particularly in its impacts on native groups concerned with hunting, fishing, and gathering activities. Impacts of coal and nuclear plants would be expected to follow similar courses as in the United States, which are described in Sections 8.2.9 and 8.2.12, respectively.

Because Canada is engaged in substantial conservation efforts and has adequate generating capacity, it appears unlikely that a major power plant construction effort would have to be undertaken to meet expected American needs in the next 20 years. Similarly, transmission lines are in place within and between the two countries, and any construction of new lines should be a modest effort at best.

8.4 Termination of Nuclear Power Plant Operations And Decommissioning

[**Prev** | **Next** | **Table of Contents**]

A nuclear power plant that ceases operations and closes permanently must go through a lengthy decommissioning process. In the process certain activities will occur that will have environmental consequences. This section summarizes the impacts of cessation of operations and beginning of decommissioning. The effect of the shutdown of operations is expected to be the same as that of a major scheduled outage, although the effect would be permanent and the loss of employment, local purchases, and most tax revenues would be permanent. All nonradioactive emissions (both airborne and liquid) would cease, as would cooling system impacts, transportation of radioactive materials, and major economic activities. Decommissioning would involve the removal of nuclear components from service and the reduction of residual radioactivity to a level that would allow the eventual release of the property for unrestricted use. Decommissioning does not mean that the plant would be demolished and the site returned to an essentially greenfield status. Rather, decommissioning requires that a nuclear facility be secured in nonoperational storage for a specified period before the next step: dismantlement. The decommissioning methods and their environmental impacts are summarized in Chapter 7. A more detailed evaluation of decommissioning requirements is provided in NUREG-0586.

8.4.1 Land Use

Neither terminating operations nor decommissioning is expected to have any immediate impacts on land use at a plant site, which would generally encompass 80-200 ha (200-500 acres). Because the ultimate objective of decommissioning is to release a site for unrestricted use, the activities that would occur at a site after the eventual completion of decommissioning and dismantlement of the plant would determine the subsequent land-use impacts. For example, it might be feasible to co-locate another power plant on a retired nuclear plant site provided safety requirements could be met and the site were large enough.

8.4.2 Air Quality

Only temporary, localized ambient air quality impacts result from nuclear plant operations. These impacts are not related to power production but instead, to motor vehicle use by plant personnel. Decommissioning activities involving vehicles and gasoline-powered equipment would extend these impacts for a few years past the termination of

operations until a plant was in a secure storage configuration (Section 7.3.3). Once storage was in progress and nonsecurity-related activities ceased, these minor air quality impacts would end.

8.4.3 Water Resources

The impacts of nuclear power plant operation on water resources result from consumptive uses (e.g., evaporation associated with the condenser cooling system) and the discharge of chemicals and heat, which affect water quality and biota present in receiving water bodies (Sections 4.2.1 and 4.2.2). These impacts would cease with termination of plant operations. Although liquid releases during decommissioning could result in similar impacts to water quality, they are expected to be temporary and minimal (Section 7.3.4). Standard construction management practices and measures would be taken to minimize worker and public radiation exposure and to protect water quality.

8.4.4 Ecology

When a nuclear plant cooling system ceases operation, an improvement in water quality of the affected water body would be expected to occur; impingement and entrainment effects on aquatic organisms would cease; and drift deposition, icing, and fogging associated with cooling tower operation (if cooling towers are used) would cease. Generally, termination of entrainment and impingement would have positive effects. However, because of compensatory mechanisms that have occurred during the many years of plant operations, the change in aquatic organism populations could be negligible at many sites. Within the cooling water effluent-mixing zone, an aquatic community acclimated to warmer temperatures and biocides will have developed. Some exogenous aquatic organisms may have become established in the zone because of the warmer environment, and these organisms likely would be adversely affected as the water temperature cooled and the original conditions were restored to the water body. Recovery of a community to the normal background composition is a process of variable duration depending on the mobility of the organisms, sources of colonists, rate of growth and maturation of the species, and other factors. In medium-size rivers, most aquatic communities recover within a period of several months, but some groups, such as mollusks, may take more than 2 years to recover (Cairns 1971).

The impacts to a cooling pond that result from plant shutdown depend on whether the pond continues to exist. If cooling ponds were maintained during plant operation by pumping water from another water body, the ponds would revert to a terrestrial system after pumping stopped. Even if ponds are maintained by natural flow, water would probably no longer be impounded. If the ponds continued to exist, the nuclear plant's effects on the ponds described in Section 4.4 would cease. Cooling ponds often remain ice-free during the winter, thereby providing artificial habitat for wildlife. Loss of the heated effluent would change the composition and dynamics of the pond community until it resembled other ponds in the region not used for cooling. This effect is likely to be significant only at Turkey Point (Florida), where the cooling canals serve as habitat for the endangered American crocodile (*Crocodylus acutus*). Changing the temperature in the canal system might adversely affect the crocodile population through loss of that habitat (Gaby et al. 1985, Mazzotti et al.).

Many transmission lines associated with a nuclear power plant would be expected to remain in service even if the plant were shut down. Those lines that are deactivated or removed would no longer produce electromagnetic fields or discharge ozone (Section 4.5). Some rights-of-way would no longer be maintained; therefore, herbicide effects would cease, and forest vegetation and wildlife eventually would predominate in previously cleared portions of corridors (Sections 4.5.3, 4.5.5, and 4.5.6). If lines were removed, they would no longer be collision hazards for birds and would no longer provide perches or nesting sites (Section 4.5.6).

Minimal land disturbance is expected during decommissioning; therefore, no direct impacts to terrestrial biota are expected (Section 7.3.5). Also, measures to protect water quality would prevent toxic effects to aquatic organisms from aqueous effluents.

8.4.5 Radiological Impacts

Radiological impacts to the public from routine existing nuclear plant operations are minimal (Section 4.6). Impacts would be reduced to even lower levels by terminating operations and would be eliminated altogether at the completion of decommissioning. Population radiation doses from decommissioning (from transport of radioactive wastes) would

be no greater than 21 person-rem (Section 7.3.1). (A discussion of the Standard International units used in measuring radioactivity and radiation dose is given in Appendix E, Section E.A.3.) Occupational doses would be between 300 and about 1900 person-rem, depending on the decommissioning method (NUREG-0586) (Section 7.3.1). Most of the occupational dose would occur during handling of radioactive materials, and the health risks associated with these dose commitments are within regulatory levels.

8.4.6 Waste Management

Terminating power plant operations eventually would eliminate generation of spent fuel and low-level radioactive waste (LLW). However, decommissioning would require the disposal of up to 19,000 m^3 (670,000 ft^3) of LLW (see Table 7.5), about 30 percent of the amount of LLW generated during the preceding 40 years of operation. Over 90 percent of the LLW would consist of nuclides with short half-life periods that decay to nonhazardous levels within about 100 years. These can be safely disposed of near the earth's surface (Section 7.3.2). At the conclusion of plant operations, no further LLW would be generated.

8.4.7 Socioeconomics

Termination of plant operations and decommissioning could have significant impacts on the economic structure and tax base of communities surrounding the plant. The magnitude of these impacts would be site-specific, depending on the proportion of total local employment, income, and local revenues provided by the plant. Direct employment at a 1000-MW(e) nuclear plant can easily total 700 people, and indirect jobs in the community can total several hundred more. Rural areas with small populations and a narrow economic base would be most impacted by termination of operations. Some jurisdictions may obtain several million dollars in annual tax revenues from plants. If these revenues constitute a substantial portion of the jurisdiction's revenues, the jurisdiction could have difficulty supporting its preclosure level of public services. Similarly, where plant-related employment is a large portion of total local employment, plant shutdown would result in a significant loss of jobs and income. In rural areas, where replacement jobs are not readily available, a loss of so many direct and indirect jobs could result in the out-migration of former plant employees, leading to population decline. In turn, this population decline could result in increased housing vacancies, decreased property values, diminished ability of the community to maintain existing levels of public services, and possibly some gradual changes in area land-use patterns.

Decommissioning would help mitigate temporarily some of the community-wide adverse effects of terminating operations even if the decommissioning work force were smaller than the operations work force and involved different personnel (Section 7.3.7). If the decommissioning work force were substantially larger than the operational work force in a rural area, the net increase could produce some of the problems of rapid economic growth, followed by the adverse effects of terminating plant operations. In effect, decommissioning activities would perpetuate for several years much of the employment and local spending benefits associated with nuclear plant operations. These benefits would cease with the end of decommissioning.

8.4.8 Aesthetics Resources

The primary positive aesthetic impact associated with decommissioning would be elimination of steam plumes from mechanical or natural-draft cooling towers wherever they are used. Other impacts that could be viewed by many people as positive would result from reduced human activities at the site. Since decommissioning would not necessarily lead to dismantlement, aesthetic impacts associated with plant appearance (in particular, large, natural draft cooling towers) might not change except where uncontaminated facilities would be removed. Visual improvements from removal of transmission lines and corridors would occur in those locations where no new plants were built as replacements for decommissioned nuclear plants.

8.5 References

American Petroleum Institute, *Summary of Occupational Injuries, Illnesses, and Fatalities in the Petroleum Industry for 1988*, Washington, D.C., 1989.

Bergesen, Christopher, "Special Report: 1994 New-Plant Construction Survey," *Electrical World*, **208**, 33-38, January 1994.

Bohi, Doug, "Utilities and State Regulators Are Failing to Take Advantage of Emission Allowance Trading, *The Electricity Journal*, **7**, 20-27, March 1994.

Bretz, Elizabeth A, "Special Report: Repowering--How to Get More from Existing Resources to Meet Future Power Generation Needs," *Electrical World*, **208**, 23-28, March 1994.

Brower, Michael, *Coal Energy: Renewable Solutions to Environmental Problems*, MIT Press Cambridge, Massachusetts, 1992.

Cairns, J., Jr., et al., "The Recovery of Damaged Streams," *ASB Bulletin*, **18**, 79-106, 1971.

California Energy Commission, *Electricity Report*, California Energy Commission, Sacramento, California, January, 1993a.

California Energy Commission, *The 1992-1993 California Energy Plan*, California Energy Commission, Sacramento, California, 1993b.

DeLaquil, Pascal III, et al., "Solar-Thermal Electric Technology," pp. 213-95 in T. B. Johansson et al., eds., *Renewable Energy: Sources for Fuels and Electricity*, Island Press, Washington, D.C. 1993.

DOE/CH100093-152, *Electricity from Biomass: A Development Strategy*, U.S. Department of Energy, Office of Solar Energy Conversion, Washington, D.C., April 1992.

DOE/EH-0077, *Energy Technologies and the Environment: Environmental Information Handbook*, U.S. Department of Energy, Assistant Secretary for Environment, Safety, and Health, Office of Environmental Analysis, Washington, D.C., 1988.

DOE/EIA-0216(88), *U.S. Crude Oil, Natural Gas, and Natural Gas Liquids Reserves, 1988 Annual Report*, U.S. Department of Energy, Washington, D.C., 1989.

DOE/EIA-0383(94), *Annual Energy Outlook, 1994: With Projections to 2010*, U.S. Department of Energy, Energy Information Administration, Office of Integrated Analysis and Forecasting, Washington, D.C., January 1994.

DOE/EIA-0384(91), *Annual Review of Energy*, U.S. Department of Energy, Energy Information Administration, Washington, D.C., June 1992.

DOE/EIA-0527(90), *Assumptions for the Annual Energy Outlook, 1990*, U.S. Department of Energy, Energy Information Administration, Office of Energy Markets and End Use, Washington, D.C., February 1990.

DOE/EIA-0531(90), *Electric Trade in the United States, 1990*, U.S. Department of Energy, Energy Information Administration, Office of Coal, Nuclear, Electric and Alternate Fuels, Washington, D.C., March 1993.

DOE/EIA-0548(90), *Estimates of U.S. Biofuels Consumption, 1990*, U.S. Department of Energy, Energy Information Administration, Washington, D.C., October 1990.

DOE/EIA-0561, *Renewable Resources in the U.S. Electricity Supply*, U.S. Department of Energy, Energy Information Administration, Washington, D.C., February 1993.

DOE/EIA-0562, *The Changing Structure of the Electric Power Industry 1970-1991*, U.S. Department of Energy, Energy Information Administration, Office of Coal, Nuclear, Electric, and Alternate Fuels, Washington, D.C. March 1993.

DOE/EIS-0146, *Clean Coal Technology Demonstration Program: Final Programmatic Environmental Impact Statement*, U.S. Department of Energy, Office of Clean Coal Technology, Washington, D.C., November 1989.

DOE/EP-0026, *Energy Technologies and the Environment: Environmental Information Handbook*, U.S. Department of Energy, Washington, D.C., June 1981.

DOE/EP-0093, *Energy Technology Characterizations Handbook*: *Environmental Pollution and Control Factors*, 3rd ed., U.S. Department of Energy, Washington, D.C., March 1983.

DOE/EV/10154-5, *Energy and Land Use*, U.S. Department of Energy, Environmental Protection, Safety, and Emergency Preparedness, Office of Environmental Programs, Washington, D.C., December 1981.

DOE/S-0086P, *Integrated Analysis Supporting the National Energy Strategy: Methodology, Assumptions and Results*, U.S. Department of Energy, Washington, D.C., 1992.

ECO Northwest, Ltd., Shapiro & Associates, Inc., and Seton, Johnson, and Odell, Inc., *Estimating Environmental Costs and Benefits for Five Generating Resources*, prepared for Bonneville Power Administration, Portland, Ore., March 1986.

Firor, K., et al., "Utility Field Experience with Photovoltaic Systems," pp. 483-512 in T. B. Johansson et al., eds., *Renewable Energy: Sources for Fuels and Electricity*, Island Press, Washington, D.C. 1993.

Florida Public Service Commission, *Review of 1994 Ten-Year Site Plans*, Florida Public Service Commission, Tallahassee, Florida, 1994.

Gaby, R., et al., "Ecology of a Population of *Crocodylus acutus* at a Power Plant Site in Florida," *Journal Herpetology*, **19**, 189-98, 1985.

Grubb, M. J., and N. I. Meyer, "Wind Energy: Resources, Systems and Regional Strategies," pp. 57-212, in T. B. Johansson et al., eds., *Renewable Energy: Sources for Fuels and Electricity*, Island Press, Washington, D.C., 1993.

Hamrin, J., and N. Rader, *Investing in the Future: A Regulator's Guide to Renewables*, National Association of Regulatory Utility Commissioners, Washington, D.C., February 1993.

Hirst, Eric, "Utility DSM Programs Could Cut Electricity Use 20 percent During the Next Two Decades," pp. 27-35, in *Proceedings of the Demand-Side Management and the Global Environment Conference*, April 22-23, 1991, Arlington, Virginia.

Hohenstein, W. G., and L. L. Wright, "Biomass Energy Production in the United States: An Overview," *Biomass and Bioenergy*, **6**, 161-73, 1994.

Illinois Department of Energy and Natural Resources, *Illinois Statewide Electric Utility Plan Part One: 1994-2014*, Vol. 1, Illinois Department of Energy and Natural Resources, Springfield, Illinois, January, 1994.

Johnansson, T. B., et. al., eds., *Renewable Energy: Sources for Fuels and Electricity*, Island Press, Washington, D.C., 1993.

Kelly, H., and C. J. Weinberg, "Utility Strategies for Using Renewables," pp. 1011-70 in T. B. Johansson et al., eds., *Renewable Energy: Sources for Fuels and Electricity*, Island Press, Washington, D.C., 1993.

Knutson, K. S., and R. L. McMahan, "Retail Power Markets and Wheeling," *Public Utilities Fortnightly*, **132**(12), 11-12, June 15, 1994.

Lamarre, L., "Electricity from Whole Trees," *EPRI Journal*, Electric Power Research Institute, Palo Alto, January/February, 1994.

Loftness, R. L., *Energy Handbook*, 2nd ed., Van Nostrand Reinhold Co., New York, 1984.

Massachusetts Division of Energy Resources, *The Massachusetts Energy Plan*, Massachusetts Department of Energy Resources, Boston, Massachusetts, 1993.

Mazzotti, F. J., et al., "Field and Laboratory Observations on Effects of High Temperature and Salinity on Hatchling *Crocodylus acutus*," *Herpetologica*, **42**(2), 191-96 (1986).

Michigan Public Service Commission, *Michigan Public Service Commission Staff Forecast of Detroit Edison Company's Electricity Sales*, Michigan Public Service Commission, Lansing, Michigan, February, 1993a.

Michigan Public Service Commission, *Michigan Public Service Commission Staff Report on Consumers Power Company's Integrated Resource Plan*, Michigan Public Service Commission, Lansing, Michigan, September, 1993b.

Minnesota Department of Public Service, *1992 Energy Policy and Conservation Report: Transition into the 21st Century*, Minnesota Department of Public Service, St. Paul, Minnesota, December, 1992.

Moreira, J. R., and A. D. Poole, "Hydropower and Its Constraints," pp. 73-120 in T. B. Johansson et al., eds., *Renewable Energy: Sources for Fuels and Electricity*, Island Press, Washington, D.C., 1993.

Nagel, D. J. "A Floodtide of Change: Rapid Change in Technology and Regulation Is Challenging Regulators to Adapt Regulatory Machinery," *Fortnightly*, **131**, 2-23, November 1, 1993.

New York State Energy Office, *New York State Energy Plan, Vol. 2: Issue Reports*, New York State Energy Office, Albany, October 1994.

NERC (North American Electric Reliability Council), *Electricity Supply and Demand, 1993-2002: Summary of Electric Utility Supply and Demand Projections*, Princeton, New Jersey, August 1993a.

NERC (North American Electric Reliability Council), *Reliability Assessment 1993-2002: The Future of Bulk Electricity Supply in North America*, Princeton, New Jersey, October 1993b.

Norton, F. L. IV, and J. W. Gottlieb, "An Option to Beat the System and Stay Competitive," *Electrical World*, 12-16, August 1993.

NUREG-0252, *The Environmental Effects of Using Coal for Generating Electricity*, U.S. Nuclear Regulatory Commission, June 1977.

NUREG-0332, R. L. Gotchy, *Potential Health and Environmental Impacts Attributable to the Nuclear and Coal Fuel Cycles*, U.S. Nuclear Regulatory Commission, Office of Nuclear Reactor Regulation, Washington, D.C., June 1987.

NUREG-0586, *Final Generic Impact Statement on Decommissioning of Nuclear Facilities*, U.S. Nuclear Regulatory Commission, Office of Regulatory Research, August 1988.

NUREG-1362, *Regulatory Analysis for Proposed Rule on Nuclear Power Plant License Renewal*, draft report for comment, U.S. Nuclear Regulatory Commission, Office of Nuclear Regulatory Research, July 1990.

OECD (Organization for Economic Cooperation and Development), *Renewable Sources of Energy*, Paris, 1987.

OTA (Office of Technology Assessment) *Energy Efficiency: Challenges and Opportunities for Electric Utilities*, U.S. Congress, Washington, D.C., September, 1993a.

OTA (Office of Technology Assessment), *Potential Environmental Impacts of Bioenergy Crop Production*, OTA-BP-E -118, Washington, September 1993b.

Pace University Center for Environmental Legal Studies, *Environmental Costs of Energy*, Oceana Publications, New York, 1991.

Pimentel, D. G., et al., "Renewable Energy: Economic and Environmental Issues," *BioScience*, **4**, 536-546, September 1994.

Public Utility Commission of Texas, *Public Utility Commission of Texas Response to Governor Richards' Requests Concerning Integrated Resource Planning*, Public Utility Commission of Texas, Austin, Texas, November, 1994.

Public Utility Commission of Texas, *1994 Statewide Electrical Energy Plan*, Draft, Public Utility Commission of Texas, Austin, Texas, February, 1995.

Rader, N., *Power Surge: The Status and Near-Term Potential of Renewable Energy Technologies*, Public Citizens' Critical Mass Energy Project, Washington, D.C., May 1989.

Ranney, J., and L. Mann, "Environmental Considerations in Energy Crop Production," *Biomass and Bioenergy*, **6**(3), 1994.

SERI/TP-260-3674, *The Potential for Renewable Energy: An Interlaboratory White Paper*, prepared by Solar Energy Research Institute, Golden, Colorado, for the U.S. Department of Energy, Office of Policy Planning and Analysis, 1990.

SR/NES/90-03, *Electricity Supply: Supporting Analysis for the National Energy Strategy*, U.S. Department of Energy, Energy Information Administration, Office of Coal, Nuclear, Electric, and Alternate Fuels, Electric Power Division.

UDI-021-89, *U.S. Steam Electric Plants: Five-Year Production Costs, 1983-1987*, Utility Data Institute, January 1989.

Vermont Department of Public Service, *Vermont Twenty-Year Electric Plan*, Vermont Department of Public Service, Montpelier, Vermont, December, 1994.

WASH-1224, *Comparative Risk-Cost-Benefit Study of Alternative Sources of Electrical Energy*, Atomic Energy Commission, Washington, D.C., December 1974.

Williams, R., and E. Larson, "Biomass-Gasifier Gas Turbine Power Generating Technology," in *Proceedings: Strategic Benefits of Biomass and Waste Fuels*, EPRI TR-103146, Electric Power Research Institute, Palo Alto, California, December 1993.

Wisconsin Public Service Commission, *Advance Plan 7: A Wisconsin Statewide Joint Plan*, State of Wisconsin Public Service Commission, Madison, Wisconsin, January, 1994a.

Wisconsin Public Service Commission, *Staff Assessment of Electric Utility Plans Advance Plan 7*, State of Wisconsin Public Service Commission, Madison, Wisconsin, July, 1994b.

Wright, L. L., "Production Technology Status of Woody and Herbaceous Crops," *Biomass and Bioenergy*, **6**, 191-210, 1994.

9. Conclusions

[**Prev** | **Next** | **Table of Contents**]

Table 9.1 summarizes the findings of the GEIS. Ninety-two environmental impacts were analyzed. Most of these were found to be Category 1 issues, which means that the impacts are of small significance at all plants and that no mitigation beyond that already employed at the plants is warranted. Category 2 issues are those for which the significance of the impacts or the appropriateness of mitigation must be determined on a site-specific basis. Because some plants have distinctly different impacts than others, not all conclusions apply to all plants. For this reason, some environmental impacts have Category 1 conclusions for some groups of plants and Category 2 conclusions for other groups of plants. Category definitions are presented in Chapter 1 and in the footnotes to Table 9.1. There remains scientific dispute about the effects of electromagnetic fields from power lines on human health. Consequently, the EIS reaches no conclusion about the significance of that impact. Also, environmental justice was not addressed in this document because guidance on that issue was not available in time to address it in this document.

Table 9.1 Summary of findings on NEPA issues for license renewal of nuclear power plants

Issue	Sections	Category[a]	Findings[b]
Surface Water Quality, Hydrology, and Use (for all plants)			
Impacts of refurbishment on surface water quality	3.4.1	1	SMALL. Impacts are expected to be negligible during refurbishment because best management practices are expected to be employed to control soil erosion and spills.
Impacts of refurbishment on surface water use	3.4.1	1	SMALL. Water use during refurbishment will not increase appreciably or will be reduced during plant outage.
Altered current patterns at intake and discharge structures	4.2.1.2.1 4.3.2.2 4.4.2	1	SMALL. Altered current patterns have not been found to be a problem at operating nuclear power plants and are not expected to be a problem during the license renewal term.
Altered salinity gradients	4.2.1.2.2 4.4.2	1	SMALL. Salinity gradients have not been found to be a problem at operating nuclear power plants and are not expected to be a problem during the license renewal term.
Altered thermal stratification of lakes	4.2.1.2.3 4.4.2.2	1	SMALL. Generally, lake stratification has not been found to be a problem at operating nuclear power plants and is not expected to be a problem during the license renewal term.
Temperature effects on sediment transport capacity	4.2.1.2.3 4.4.2.2	1	SMALL. These effects have not been found to be a problem at operating nuclear power plants and are not expected to be a problem during the license renewal term.
Scouring caused by discharged cooling water	4.2.1.2.3 4.4.2.2	1	SMALL. Scouring has not been found to be a problem at most operating nuclear power plants and has caused only localized effects at a few plants. It is not expected to be a problem during the license renewal term.
Discharge of chlorine or other biocides	4.2.1.2.4 4.4.2.2	1	SMALL. Effects are not a concern among regulatory and resource agencies and are not expected to be a problem during the license renewal term.
Discharge of sanitary wastes and minor chemical spills	4.2.1.2.4 4.4.2.2	1	SMALL. Effects are readily controlled through NPDES permit and periodic modifications, if needed, and are not expected to be a problem during the license renewal term.
Discharge of metals in waste water	4.2.1.2.4 4.3.2.2 4.4.2.2	1	SMALL. These discharges have not been found to be a problem at operating nuclear power plants with cooling-tower -based heat dissipation systems and have been satisfactorily

			mitigated at other plants. They are not expected to be a problem during the license renewal term.
Water use conflicts (plants with once-through cooling systems)	4.2.1.3	1	SMALL. These conflicts have not been found to be a problem at operating nuclear power plants with once-through heat dissipation systems.
Water use conflicts (plants with cooling towers and cooling ponds using make-up water from a small river with low flow)	4.3.2.1 4.4.2.1	2	SMALL OR MODERATE. The issue has been a concern at nuclear power plants with cooling ponds and at plants with cooling towers. Impacts on instream and riparian communities near these plants could be of moderate significance in some situations.
Aquatic Ecology (for all plants)			
Refurbishment	3.5	1	SMALL. During plant shutdown and refurbishment there will be negligible effects on aquatic biota because of a reduction of entrainment and impingement of organisms or a reduced release of chemicals.
Accumulation of contaminants in sediments or biota	4.2.1.2.4 4.3.3 4.4.3 4.4.2.2	1	SMALL. Accumulation of contaminants has been a concern at a few nuclear power plants but has been satisfactorily mitigated by replacing copper alloy condenser tubes with condenser tubes of another metal. It is not expected to be a problem during the license renewal term.
Eutrophication	4.2.1.2.3 4.4.2.2	1	SMALL. Eutrophication has not been found to be a problem at operating nuclear power plants and is not expected to be a problem during the license renewal term.
Entrainment of phytoplankton and zooplankton	4.2.2.1.1 4.3.3 4.4.3	1	SMALL. Entrainment of phytoplankton and zooplankton has not been found to be a problem at operating nuclear power plants and is not expected to be a problem during the license renewal term.
Cold shock	4.2.2.1.5 4.3.3 4.4.3	1	SMALL. Cold shock has been satisfactorily mitigated at operating nuclear plants with once-through cooling systems, has not endangered fish populations or been found to be a problem at operating nuclear power plants with cooling towers or cooling ponds, and is not expected to be a problem during the license renewal term.
Thermal plume barrier to migrating fish	4.2.2.1.6 4.4.3	1	SMALL. Thermal plumes have not been found to be a problem at operating nuclear power plants and is not expected to be a problem during the license renewal term.
Distribution of aquatic organisms	4.2.2.1.6 4.4.3	1	SMALL. Thermal discharges may have localized effects but are not expected to affect the larger geographical distribution of aquatic organisms.
Premature emergence of aquatic insects	4.2.2.1.7 4.4.3	1	SMALL. Premature emergence has been found to be a localized effect at some operating nuclear power plants but has not been a problem and is not expected to be a problem during the license renewal term.
Gas supersaturation (gas bubble disease)	4.2.2.1.8 4.4.3	1	SMALL. Gas supersaturation was a concern at a small number of operating nuclear power plants with once-through cooling systems but has been satisfactorily mitigated. It has not been found to be a problem at operating nuclear power plants with cooling towers or cooling ponds and is not expected to be a problem during the license renewal term.

Low dissolved oxygen in the discharge	4.2.2.1.9 4.3.3 4.4.3	1	SMALL. Low dissolved oxygen has been a concern at one nuclear power plant with a once-through cooling system but has been effectively mitigated. It has not been found to be a problem at operating nuclear power plants with cooling towers or cooling ponds and is not expected to be a problem during the license renewal term.
Losses from predation, parasitism, and disease among organisms exposed to sublethal stresses	4.2.2.1.10 4.4.3	1	SMALL. These types of losses have not been found to be a problem at operating nuclear power plants and are not expected to be a problem during the license renewal term.
Stimulation of nuisance organisms (e.g., shipworms)	4.2.2.1.11 4.4.3	1	SMALL. Stimulation of nuisance organisms has been satisfactorily mitigated at the single nuclear power plant with a once-through cooling system where previously it was a problem. It has not been found to be a problem at operating nuclear power plants with cooling towers or cooling ponds and is not expected to be a problem during the license renewal term.
Aquatic Ecology (for plants with once-through and cooling pond heat dissipation systems)			
Entrainment of fish and shellfish in early life stages	4.2.2.1.2 4.4.3	2	SMALL, MODERATE, OR LARGE. The impacts of entrainment are small at many plants but may be moderate or large at a few plants with once-through and cooling-pond cooling systems. Further, ongoing efforts to restore fish populations may increase the numbers of fish susceptible to intake effects during the license renewal period, so that entrainment studies conducted in support of the original license may no longer be valid.
Impingement of fish and shellfish	4.2.2.1.3 4.4.3	2	SMALL, MODERATE, OR LARGE. The impacts of impingement are small at many plants but may be moderate or even large at a few plants with once-through and cooling pond cooling systems.
Heat shock	4.2.2.1.4 4.4.3	2	SMALL, MODERATE, OR LARGE. Because of continuing concerns about heat shock and the possible need to modify thermal discharges in response to changing environmental conditions, the impacts may be of moderate or large significance at some plants.
Entrainment of fish and shellfish in early life stages	4.3.3	1	SMALL. Entrainment of fish has not been found to be a problem at operating nuclear power plants with this type of cooling system and is not expected to be a problem during the license renewal term.
Impingement of fish and shellfish	4.3.3	1	SMALL. The impingement has not been found to be a problem at operating nuclear power plants with this type of cooling system and is not expected to be a problem during the license renewal term.
Heat shock	4.3.3	1	SMALL. Heat shock has not been found to be a problem at operating nuclear power plants with this type of cooling system and is not expected to be a problem during the license renewal term.
Groundwater Use and Quality			
Impacts of refurbishment on groundwater use and quality	3.4.2	1	SMALL. Extensive dewatering during the original construction on some sites will not be repeated during refurbishment on any sites. Any plant wastes produced during

			refurbishment will be handled in the same manner as in current operating practices and are not expected to be a problem during the license renewal term.
Groundwater use conflicts (potable and service water; plants that use <100 gpm)	4.8.1.1 4.8.1.2	1	SMALL. Plants using less than 100 gpm are not expected to cause any groundwater use conflicts.
Groundwater use conflicts (potable and service water, and dewatering; plants that use > 100 gpm)	4.8.1.1 4.8.1.2	2	SMALL, MODERATE, OR LARGE. Plants that use more than 100 gpm may cause groundwater use conflicts with nearby groundwater users.
Groundwater use conflicts (plants using cooling towers withdrawing make-up water from a small river)	4.8.1.3	2	SMALL, MODERATE, OR LARGE. Water use conflicts may result from surface water withdrawals from small water bodies during low flow conditions which may affect aquifer recharge, especially if other groundwater or upstream surface water users come on line before the time of license renewal.
Groundwater use conflicts (Ranney wells)	4.8.1.4	2	SMALL, MODERATE, OR LARGE. Ranney wells can result in potential groundwater depression beyond the site boundary. Impacts of large groundwater withdrawal for cooling tower makeup at nuclear power plants using Ranney wells must be evaluated at the time of application for license renewal.
Groundwater quality degradation (Ranney wells)	4.8.2.2	1	SMALL. Groundwater quality at river sites may be degraded by induced infiltration of poor-quality river water into an aquifer that supplies large quantities of reactor cooling water. However, the lower quality infiltrating water would not preclude the current uses of groundwater and is not expected to be a problem during the license renewal term.
Groundwater quality degradation (saltwater intrusion)	4.8.2.1	1	SMALL. Nuclear power plants do not contribute significantly to saltwater intrusion.
Groundwater quality degradation (cooling ponds in salt marshes)	4.8.3	1	SMALL. Sites with closed-cycle cooling ponds may degrade groundwater quality. Because water in salt marshes is brackish, this is not a concern for plants located in salt marshes.
Groundwater quality degradation (cooling ponds at inland sites)	4.8.3	2	SMALL, MODERATE, OR LARGE. Sites with closed-cycle cooling ponds may degrade groundwater quality. For plants located inland, the quality of the groundwater in the vicinity of the ponds must be shown to be adequate to allow continuation of current uses.
		Terrestrial Resources	
Refurbishment impacts	3.6	2	SMALL, MODERATE, OR LARGE. Refurbishment impacts are insignificant if no loss of important plant and animal habitat occurs. However, it cannot be known whether important plant and animal communities may be affected until the specific proposal is presented with the license renewal application.
Cooling tower impacts on crops and ornamental vegetation	4.3.4	1	SMALL. Impacts from salt drift, icing, fogging, or increased humidity associated with cooling tower operation have not been found to be a problem at operating nuclear power plants and are not expected to be a problem during the license renewal term.

Cooling tower impacts on native plants	4.3.5.1	1	SMALL. Impacts from salt drift, icing, fogging, or increased humidity associated with cooling tower operation have not been found to be a problem at operating nuclear power plants and are not expected to be a problem during the license renewal term.
Bird collisions with cooling towers	4.3.5.2	1	SMALL. These collisions have not been found to be a problem at operating nuclear power plants and are not expected to be a problem during the license renewal term.
Cooling pond impacts on terrestrial resources	4.4.4	1	SMALL. Impacts of cooling ponds on terrestrial ecological resources are considered to be of small significance at all sites.
Power line right-of-way management (cutting and herbicide application)	4.5.6.1	1	SMALL. The impacts of right-of-way maintenance on wildlife are expected to be of small significance at all sites.
Bird collision with power lines	4.5.6.2	1	SMALL. Impacts are expected to be of small significance at all sites.
Impacts of electromagnetic fields on flora and fauna (plants, agricultural crops, honeybees, wildlife, livestock)	4.5.6.3	1	SMALL. No significant impacts of electromagnetic fields on terrestrial flora and fauna have been identified. Such effects are not expected to be a problem during the license renewal term.
Floodplains and wetland on power line right of way	4.5.7	1	SMALL. Periodic vegetation control is necessary in forested wetlands underneath power lines and can be achieved with minimal damage to the wetland. No significant impact is expected at any nuclear power plant during the license renewal term.
Threatened or Endangered Species (for all plants)			
Threatened or endangered species	3.9 4.1	2	SMALL, MODERATE, OR LARGE. Generally, plant refurbishment and continued operation are not expected to adversely affect threatened or endangered species. However, consultation with appropriate agencies would be needed at the time of license renewal to determine whether threatened or endangered species are present and whether they would be adversely affected.
Air Quality			
Air quality during refurbishment (non-attainment and maintenance areas)	3.3	2	SMALL, MODERATE, OR LARGE. Air quality impacts from plant refurbishment associated with license renewal are expected to be small. However, vehicle exhaust emissions could be cause for concern at locations in or near nonattainment or maintenance areas. The significance of the potential impact cannot be determined without considering the compliance status of each site and the numbers of workers expected to be employed during the outage.
Air quality effects of transmission lines	4.5.2	1	SMALL. Production of ozone and oxides of nitrogen is insignificant and does not contribute measurably to ambient levels of these gases.
Land Use			
On-site land use	3.2	1	SMALL. Projected on-site land use changes would require a small fraction of any nuclear power plant site and would involve land that is controlled by the applicant.

Power line right-of-ways	4.5.3	1	SMALL. Ongoing uses of power line right-of-ways would continue with no change in restrictions. The effects of these restrictions are of small significance.
			Human Health
Radiation exposures to the public during refurbishment	3.8.1	1	SMALL. During refurbishment, the gaseous effluents would result in doses that are similar to those from current operation. Applicable regulatory dose limits to the public are not expected to be exceeded.
Occupational radiation exposures during refurbishment	3.8.2	1	SMALL. Occupational doses from refurbishment are expected to be within the range of annual average collective doses experienced for pressurized-water reactors and boiling-water reactors. Occupational mortality risks from all causes including radiation is in the mid-range for industrial settings.
Microbiological organisms (occupational health)	4.3.6	1	SMALL. Occupational health impacts are expected to be controlled by continued application of accepted industrial hygiene practices to minimize worker exposures.
scope="row"Microbiological organisms (public health) (plants using lakes or canals, or cooling towers or cooling ponds that discharge to a small river)	4.3.6	2	SMALL, MODERATE, OR LARGE. These organisms are not expected to be a problem at most operating plants except possibly at plants using cooling ponds, lakes, or canals that discharge to small rivers. Without site-specific data, it is not possible to predict the effects generically.
Noise	4.3.7	1	SMALL. Noise has not been found to be a problem at operating plants and is not expected to be a problem at any plant during the license renewal term.
Electromagnetic fields, acute effects (electric shock)	4.5.4.1	2	SMALL, MODERATE, OR LARGE. Electrical shock resulting from direct access to energized conductors or from induced charges in metallic structures have not been found to be a problem at most operating plants and are not expected to be a problem during the license renewal term. However, without review of each nuclear plant's transmission line conformance with National Electric Safety Code criteria, it is not possible to determine the significance of the electric shock potential.
Electromagnetic fields, chronic effects	4.5.4.2	NA[c]	UNCERTAIN. Biological and physical studies of 60-Hz electromagnetic fields have not found consistent evidence linking harmful effects with field exposures. However, because the state of the science is currently inadequate, no generic conclusion on human health impacts is possible.[c]
Radiation exposures to public (license renewal term)	4.6.2	1	SMALL. Radiation doses to the public will continue at current levels associated with normal operations.
Occupational radiation exposures (license renewal term)	4.6.3	1	SMALL. Projected maximum occupational doses during the license renewal term are within the range of doses recently experienced during normal operations and normal maintenance outages, and would be well below regulatory limits.
			Socioeconomics
Housing impacts	3.7.2 4.7.1	2	SMALL, MODERATE, OR LARGE. Housing impacts are expected to be of small significance at plants located in a medium or high population area and not in an area where

			growth control measures that limit housing development are in effect. Moderate or large housing impacts of the work force associated with refurbishment may be associated with plants located in sparsely populated areas or in areas with growth control measures that limit housing development.
Public services: public safety, social services, and tourism and recreation	3.7.4 3.7.4.3 3.7.4.4 3.7.4.6 4.7.3 4.7.3.3 4.7.3.4 4.7.3.6	1	SMALL. Impacts to public safety, social services, and tourism and recreation are expected to be of small significance at all sites.
Public services: public utilities	3.7.4.5 4.7.3.5	2	SMALL OR MODERATE. An increased problem with water shortages at some sites may lead to impacts of moderate significance on public water supply availability.
Public services, education (refurbishment)	3.7.4.1	2	SMALL, MODERATE, OR LARGE. Most sites would experience impacts of small significance but larger impacts are possible depending on site- and project-specific factors.
Public services, education (license renewal term)	4.7.3.1	1	SMALL. Only impacts of small significance are expected.
Offsite land use (refurbishment)	3.7.5	2	SMALL OR MODERATE. Impacts may be of moderate significance at plants in low population areas.
Offsite land use (license renewal term)	4.7.4	2	SMALL, MODERATE, OR LARGE. Significant changes in land use may be associated with population and tax revenue changes resulting from license renewal.
Public services, transportation	3.7.4.2 4.7.3.2	2	SMALL, MODERATE, OR LARGE. Transportation impacts are generally expected to be of small significance. However, the increase in traffic associated with the additional workers and the local road and traffic control conditions may lead to impacts of moderate or large significance at some sites.
Historic and archaeological resources	3.7.7 4.7.7	2	SMALL, MODERATE, OR LARGE. Generally, plant refurbishment and continued operation are expected to have no more than small adverse impacts on historic and archaeological resources. However, the National Historic Preservation Act requires the Federal agency to consult with the State Historic Preservation Officer to determine whether there are properties present that require protection.
Aesthetic impacts (refurbishment)	3.7.8	1	SMALL. No significant impacts are expected during refurbishment.
Aesthetic impacts (license renewal term)	4.7.6	1	SMALL. No significant impacts are expected during the license renewal term.
Aesthetic impacts of transmission lines (license renewal term)	4.5.8	1	SMALL. No significant impacts are expected during the license renewal term.
		Postulated Accidents	
Design basis accidents	5.3.2 5.5.1	1	SMALL. The NRC staff has concluded that the environmental impacts of design basis accidents are of small significance for all plants.

Severe accidents	5.3.3 5.3.3.2 5.3.3.3 5.3.3.4 5.3.3.5 5.4 5.5.2	2	SMALL. The probability weighted consequences of atmospheric releases, fallout onto open bodies of water, releases to ground water, and societal and economic impacts from severe accidents are small for all plants. However, alternatives to mitigate severe accidents must be considered for all plants that have not considered such alternatives.
	Uranium Fuel Cycle and Waste Management		
Nonradiological waste		1	SMALL. No changes to generating systems are anticipated for license renewal. Facilities and procedures are in place to ensure continued proper handling and disposal at all plants.
Low-level waste storage and disposal		1	SMALL. The comprehensive regulatory controls that are in place and the low public doses being achieved at reactors ensure that the radiological impacts to the environment will remain small during the term of a renewed license. The maximum additional on-site land that may be required for low-level waste storage during the term of a renewed license and associated impacts will be small. Nonradiological impacts on air and water will be negligible. The radiological and nonradiological environmental impacts of long-term disposal of low-level waste from any individual plant at licensed sites are small. In addition, the Commission concludes that there is reasonable assurance that sufficient low-level waste disposal capacity will be made available when needed for facilities to be decommissioned consistent with NRC decommissioning requirements.
Mixed waste storage and disposal		1	SMALL. The comprehensive regulatory controls and the facilities and procedures that are in place ensure proper handling and storage, as well as negligible doses and exposure to toxic materials for the public and the environment at all plants. License renewal will not increase the small, continuing risk to human health and the environment posed by mixed waste at all plants. The radiological and nonradiological environmental impacts of long-term disposal of mixed waste from any individual plant at licensed sites are small. In addition, the Commission concludes that there is reasonable assurance that sufficient mixed waste disposal capacity will be made available when needed for facilities to be decommissioned consistent with NRC decommissioning requirements.
On-site spent fuel		1	SMALL. The expected increase in the volume of spent fuel from an additional 20 years of operation can be safely accommodated on site with small environmental effects through dry or pool storage at all plants if a permanent repository or monitored retrievable storage is not available.
Transportation		2	Table S-4 of 10 CFR 51 contains an assessment of impact parameters to be used in evaluating transportation effects in each case.
	Decommissioning		

Radiation doses	7.3.1 7.4	1	SMALL. Doses to the public will be well below applicable regulatory standards regardless of which decommissioning method is used. Occupational doses would increase no more than 1 man-rem caused by buildup of long-lived radionuclides during the license renewal term.
Waste management	7.3.2 7.4	1	SMALL. Decommissioning at the end of a 20-year license renewal period would generate no more solid wastes than at the end of the current license term. No increase in the quantities of Class C or greater than Class C wastes would be expected.
Air quality	7.3.3 7.4	1	SMALL. Air quality impacts of decommissioning are expected to be negligible either at the end of the current operating term or at the end of the license renewal term.
Water quality	7.3.4 7.4	1	SMALL. The potential for significant water quality impacts from erosion or spills is no greater whether decommissioning occurs after a 20-year license renewal period or after the original 40-year operation period, and measures are readily available to avoid such impacts.
Ecological resources	7.3.5 7.4		SMALL. Decommissioning after either the initial operating period or after a 20-year license renewal period is not expected to have any direct ecological impacts.
Socioeconomic impacts	7.3.7 7.4	1	SMALL. Decommissioning would have some short-term socioeconomic impacts. The impacts would not be increased by delaying decommissioning until the end of a 20-year relicense period, but they might be decreased by population and economic growth.
		Environmental Justice	
Environmental justice	NA[d]	NA[d]	NONE. The need for and content of an analysis of environmental justice will be addressed in plant-specific reviews.

[a]The numerical entries in this column are based on the following category definitions:

Category 1: For the issue, the analysis reported in the Generic Environmental Impact Statement has shown:

(1) The environmental impacts associated with the issue have been determined to apply either to all plants or, for some issues, to plants having a specific type of cooling system or other specified plant or site characteristics;

(2) A single significance level (i.e., small, moderate, or large) has been assigned to the impacts (except for collective off-site radiological impacts from the fuel cycle and from high-level waste and spent-fuel disposal); and

(3) Mitigation of adverse impacts associated with the issue has been considered in the analysis and it has been determined that additional plant-specific mitigation measures are likely not to be sufficiently beneficial to warrant implementation.

The generic analysis of the issue may be adopted in each plant-specific review.

Category 2: For the issue, the analysis reported in the Generic Environmental Impact Statement has shown that one or more of the criteria of Category 1 can not be met, and therefore additional plant-specific review is required.

[b]The impact findings in this column are based on the definitions of three significant levels. Unless the significance level is identified as beneficial, the impact is adverse, or in

the case of "small," may be negligible. The definitions of significance follow:

SMALL--For the issue, environmental effects are not detectable or are so minor that they will neither destabilize nor noticeably alter any important attribute of the resource. For the purposes of assessing radiological impacts, the Commission has concluded that those impacts that do not exceed permissible levels in the Commission's regulations are considered small as the term is used in this table.
MODERATE--For the issue, environmental effects are sufficient to alter noticeably, but not to destabilize, important attributes of the resource.
LARGE--For the issue, environmental effects are clearly noticeable and are sufficient to destabilize important attributes of the resource.
For issues where probability is a key consideration (i.e. accident consequences), probability was a factor in determining significance.

[c]NA (not applicable). Scientific evidence on the chronic biological effects on humans from exposure to transmission line electric and magnetic fields is inconclusive. If the Commission finds that a consensus has been reached by appropriate Federal health agencies that there are adverse health effects, the Commission will require applicants to submit plant-specific reviews of these health effects.

[d]NA (not applicable). Environmental justice is not addressed in the GEIS because Executive Order 12898 issued on February 11, 1994, and implementation guidance were not available prior to completion of this report.

10. List of Preparers

[**Prev** | **Table of Contents**]

D. C. Agouridis, Oak Ridge National Laboratory, Ph.D., Electrical Engineering, University of Minnesota, 36 years' experience in environmental assessment.

C. R. Boston, Oak Ridge National Laboratory, Ph.D., Chemistry, Northwestern University; B.S., Chemistry, Ohio University; 21 years' experience in environmental assessment.

R. B. Braid, Jr., Oak Ridge National Laboratory, Ph.D., Political Science, University of Tennessee; M.S., Political Science, The University of Tennessee; B.S., Political Science, Lambuth College; 19 years' experience in environmental assessment.

G. F. Cada, Oak Ridge National Laboratory, Ph.D., Zoology, University of Nebraska; M.S., Zoology, Colorado State University; B.S., Zoology, University of Nebraska; 17 years' experience in environmental assessment.

A. W. Campbell, Oak Ridge National Laboratory, M.S., Biology, Wilkes College; B.S., Biology, Wilkes College; 14 years' experience in environmental assessment.

J. B. Cannon, Oak Ridge National Laboratory, Ph.D., Mechanical Engineering, California Institute of Technology; M.S., Mechanical Engineering, California Institute of Technology; B.S., Mechanical Engineering, Tuskegee Institute; 19 years' experience in environmental assessment.

S. W. Christensen, Oak Ridge National Laboratory, Ph.D., Ecology, Yale University; MPHIL, Ecology, Yale University; B.A., Biology, Amherst College; 21 years' experience in environmental assessment.

D. P. Cleary, U.S. Nuclear Regulatory Commission, M.A., Economics, University of Florida; graduate studies in Natural Resource Economics and Environmental Policy; 32 years' experience in environmental assessment.

K. S. Dragonette, U.S. Nuclear Regulatory Commission, M.S. Health Physics, Vanderbilt University; 30 years' experience in health physics and the regulation of nuclear materials.

C. E. Easterly, Oak Ridge National Laboratory, Ph.D., Physics (minor in Health Physics), University of Tennessee; B.S., Physics, Mississippi State University; 22 years' experience in environmental assessment.

S. E. Feld, U.S. Nuclear Regulatory Commission, Ph.D., University of Rhode Island, Resource Economics, Environmental and Economic Assessments, 20 years' experience in environmental assessment.

D. L. Feldman, Oak Ridge National Laboratory, Ph.D., Political Science, University of Missouri; M.A., Political Science, University of Missouri; B.A., Political Science, Kent State University; 2 years' experience in environmental assessment.

M. A. Finklestein, U.S. Nuclear Regulatory Commission, J.D., Brooklyn Law School, B.A., Biology/Religious Studies, University of Rochester; 2 years' experience in environmental assessment.

G. G. Gears, U.S. Nuclear Regulatory Commission (currently employed by the U.S. Department of Energy), M.S., Biology/System Ecology, the University of Florida; Terrestrial Ecology/Land Use, Air Quality, Agricultural/Vegetation, Norse, Transmission Systems, Floodplains/Wetlands, SAMDAs; 16 years' experience in environmental assessment.

C. W. Hagan, Oak Ridge National Laboratory, M.A., English, Virginia Polytechnic Institute and State University; B.S., Biology, Virginia Polytechnic Institute and State University; 13 years' experience in technical writing.

J. J. Hayes, U.S. Nuclear Regulatory Commission, M.S., Nuclear Engineering, Purdue University; Radiological Effects (Occupational and Public Exposures), Postulated Accidents (Health Effects); 21 years' experience in radiological assessment of release from nuclear power plants.

M. Kaltman, U.S. Nuclear Regulatory Commission, M.C.P., University of Pennsylvania, Urban Planning; 29 years' experience in socioeconomic and environmental assessment.

T. L. King, U.S. Nuclear Regulatory Commission, M.S., Mechanical Engineering, Stanford University; Postulated Accidents; 27 years' experience in design and safety of nuclear reactor components and systems.

R. G. Knudson, Science and Engineering Associates, Inc., B.S., Nuclear Engineering, University of New Mexico; 12 years' experience in nuclear engineering.

R. L. Kroodsma, Oak Ridge National Laboratory, Ph.D., Zoology, North Dakota State University; M.S., Zoology, North Dakota State University; B.A., Biology, Hope College; 20 years' experience in environmental assessment.

R. R. Lee, Oak Ridge National Laboratory, M.S., Geology, Temple University; B.S., Geology, Temple University; 11 years' experience in environmental assessment.

M. A. Linn, Oak Ridge National Laboratory, M.S., B.S., Mechanical Engineering, University of Tennessee; 14 years' experience in nuclear safety analysis.

L. Lois, U.S. Nuclear Regulatory Commission, Ph.D, Nuclear Engineering, Columbia University; SAMDAs; 29 years' experience in nuclear engineering.

J. Lynch, Science and Engineering Associates, Inc., B.S., Mathematics/Statistics, Purdue University; 33 years' experience in mathematics.

L. N. Mann, Oak Ridge National Laboratory, M.S., Ecology, University of Tennessee; B.S., Botany, University of Tennessee; 24 years' experience in ecological research and assessment.

M. T. Masnik, U.S. Nuclear Regulatory Commission, Ph.D., Zoology, Virginia Polytechnic Institute and State University; Aquatic Ecology, Decommissioning, Aquatic Microorganisms and Human Health; 20 years' experience in aquatic ecology.

L. N. McCold, Oak Ridge National Laboratory, M.S., Mechanical Engineering, Oregon State University; B.S., Physics, Oregon State University; 15 years' experience in environmental assessment.

R. B. McLean, Oak Ridge National Laboratory, Ph.D., Marine Biology, Florida State University; B.A., Biology, Florida State University; 20 years' experience in environmental assessment.

R. L. Miller, Oak Ridge National Laboratory, M.S., Meteorology, Pennsylvania State University; B.S., Meteorology, Pennsylvania State University; 13 years' experience in environmental assessment.

J. A. Mitchell, U.S. Nuclear Regulatory Commission, B.A., Chemistry, Connecticut College; 39 years' experience in reactor physics and severe accident source team research.

J. P. Moulton, U.S. Nuclear Regulatory Commission, M.B.A., Averett College; B.S., Electrical Engineering, U.S. Naval Academy; 10 years' experience in nuclear power operations; 5 years' experience in environmental analysis.

G. A. Murphy, Oak Ridge National Laboratory, B.S., Mechanical Engineering, Montana State University; 28 years' experience in nuclear power plant operations and analysis.

J. F. Munro, Oak Ridge National Laboratory, Ph.D., Public Administration/Environmental Planning, University of California at Los Angeles; M.A., Political Science, University of California at Los Angeles; B.A., Political Science, University of California at Santa Barbara; 12 years' experience in environmental planning.

H. H. Newsome, U.S. Nuclear Regulatory Commission, J.D., University of Virginia; B.A., Public Policy, Duke University; 3 years' experience in counseling on NEPA law.

R. L. Pedersen, U.S. Nuclear Regulatory Commission, M.S., Radiological Health, University of North Carolina, Chapel Hill, School of Public Health; 20 years' experience in health physics.

H. T. Peterson, Jr., U.S. Nuclear Regulatory Commission (currently employed by the U.S. Department of Energy), M.N.E., Nuclear Engineering--Radiological Health, New York University; Certified by American Board of Health Physics; 35 years' experience in health physics.

H. D. Quarles, Oak Ridge National Laboratory, J.D., Widener University School of Law; Ph.D., Environmental Science, University of Virginia; M.S., Environmental Science, University of Virginia; B.S., Biology, Hampden-Sydney; 20 years' experience in environmental assessment.

A. K. Roecklein, U.S. Nuclear Regulatory Commission, M.S., Physics, Vanderbilt; 30 years' experience in health physics.

S. Ross, Science and Engineering Associates, Inc., M.S., Nuclear Engineering, University of New Mexico; B.S., Nuclear Engineering, University of New Mexico; 10 years' experience in nuclear engineering.

R. M. Rush, Oak Ridge National Laboratory, Ph.D., Analytical Chemistry, University of Virginia; M.S., Analytical Chemistry, University of Virginia; B.S., Chemistry, Princeton University; 21 years' experience in environmental assessment.

R. B. Samworth, U.S. Nuclear Regulatory Commission, Ph.D, Civil Engineering, Cornell University; Aquatic Ecology, Surface and Groundwater Use and Quality; 28 years' experience in environmental engineering and environmental assessment.

J. W. Saulsbury, Oak Ridge National Laboratory, M.S., Planning, University of Tennessee; B.A., History, University of Tennessee; 7 years' experience in environmental assessment.

S. M. Schexnayder, Oak Ridge National Laboratory, B.A., English, Nicholls State University; 6 years' experience in environmental assessment.

M. Schweitzer, Oak Ridge National Laboratory, M.S., Urban Planning, University of Tennessee; B.A., Psychology, University of Michigan; 16 years' experience in environmental assessment.

F. S. Sciacca, Science and Engineering Associates, Inc., M.S., Mechanical Engineering, Colorado State University; B.S., Mechanical Engineering, Colorado State University; 30 years' experience in engineering.

A. W. Serkiz, U.S. Nuclear Regulatory Commission, B.S. Mechanical Engineering, Clarkson University; 38 years' experience in mechanical engineering, nuclear reactor safety issue resolution, and project management.

W. P. Staub, Oak Ridge National Laboratory, Ph.D., Geotechnical Engineering, Iowa State University; M.S., Geology, Washington University; B.S., Geological Engineering, Washington University; 18 years' experience in environmental assessment.

V. R. Tolbert, Oak Ridge National Laboratory, Ph.D., Ecology, University of Tennessee; M.S., Ecology, University of Tennessee; B.S., Biology, East Tennessee State University; 16 years' experience in environmental assessment.

S. P. Turel, U.S. Nuclear Regulatory Commission, M.B.A., University of Pittsburg; B.S., Chemistry, Pennsylvania State University; 30 years' experience in safeguards and health physics.

R. Walsh, Science and Engineering Associates, Inc., M.S., Mathematics, San Diego State College; B.S., Physics, California Institute of Technology; 31 years' experience in mathematics.

J. S. Watson, Oak Ridge National Laboratory, Ph.D., M.S., B.S., Chemical Engineering, University of Tennessee; 36 years' experience in chemical processing development for energy systems.

M. W. Yambert, Oak Ridge National Laboratory, B.E.S.M, Georgia Institute of Technology; 10 years' experience in applied computer modeling.

E. A. Zeighami, Oak Ridge National Laboratory, Ph.D., Epidemiology, University of Oklahoma; 22 years' experience in epidemiology.

G. L. Zigler, Science and Engineering Associates, Inc., M.S., Nuclear Engineering, U.S. Air Force Institute of Technology; B.S., Electrical Engineering, University of New Mexico; 28 years' experience in nuclear engineering.

[**Table of Contents**

Page Last Reviewed/Updated Sunday, March 13, 2011

©2000- 2011 NRC

United States Nuclear Regulatory Commission

Protecting People and the Environment

NUREG-1437, Volume 1
Revision 1

Generic Environmental Impact Statement for License Renewal of Nuclear Plants

Main Report

Draft Report for Comment

Office of Nuclear Reactor Regulation

AVAILABILITY OF REFERENCE MATERIALS IN NRC PUBLICATIONS

NRC Reference Material

As of November 1999, you may electronically access NUREG-series publications and other NRC records at NRC's Public Electronic Reading Room at http://www.nrc.gov/reading-rm.html.
Publicly released records include, to name a few, NUREG-series publications; *Federal Register* notices; applicant, licensee, and vendor documents and correspondence; NRC correspondence and internal memoranda; bulletins and information notices; inspection and investigative reports; licensee event reports; and Commission papers and their attachments.

NRC publications in the NUREG series, NRC regulations, and *Title 10, Energy*, in the Code of *Federal Regulations* may also be purchased from one of these two sources.

1. The Superintendent of Documents
   U.S. Government Printing Office
   Mail Stop SSOP
   Washington, DC 20402–0001
   Internet: bookstore.gpo.gov
   Telephone: 202-512-1800
   Fax: 202-512-2250
2. The National Technical Information Service
   Springfield, VA 22161–0002
   www.ntis.gov
   1–800–553–6847 or, locally, 703–605–6000

A single copy of each NRC draft report for comment is available free, to the extent of supply, upon written request as follows:
Address: U.S. Nuclear Regulatory Commission
Office of Administration
Mail, Distribution and Messenger Team
Washington, DC 20555-0001
E-mail: DISTRIBUTION@nrc.gov
Facsimile: 301–415–2289

Some publications in the NUREG series that are posted at NRC's Web site address http://www.nrc.gov/reading-rm/doc-collections/nuregs are updated periodically and may differ from the last printed version. Although references to material found on a Web site bear the date the material was accessed, the material available on the date cited may subsequently be removed from the site.

Non-NRC Reference Material

Documents available from public and special technical libraries include all open literature items, such as books, journal articles, and transactions, *Federal Register* notices, Federal and State legislation, and congressional reports. Such documents as theses, dissertations, foreign reports and translations, and non-NRC conference proceedings may be purchased from their sponsoring organization.

Copies of industry codes and standards used in a substantive manner in the NRC regulatory process are maintained at—
The NRC Technical Library
Two White Flint North
11545 Rockville Pike
Rockville, MD 20852–2738

These standards are available in the library for reference use by the public. Codes and standards are usually copyrighted and may be purchased from the originating organization or, if they are American National Standards, from—
American National Standards Institute
11 West 42nd Street
New York, NY 10036–8002
www.ansi.org
212–642–4900

Legally binding regulatory requirements are stated only in laws; NRC regulations; licenses, including technical specifications; or orders, not in NUREG-series publications. The views expressed in contractor-prepared publications in this series are not necessarily those of the NRC.

The NUREG series comprises (1) technical and administrative reports and books prepared by the staff (NUREG–XXXX) or agency contractors (NUREG/CR–XXXX), (2) proceedings of conferences (NUREG/CP–XXXX), (3) reports resulting from international agreements (NUREG/IA–XXXX), (4) brochures (NUREG/BR–XXXX), and (5) compilations of legal decisions and orders of the Commission and Atomic and Safety Licensing Boards and of Directors' decisions under Section 2.206 of NRC's regulations (NUREG–0750).

United States Nuclear Regulatory Commission

Protecting People and the Environment

NUREG-1437, Volume 1
Revision 1

Generic Environmental Impact Statement for License Renewal of Nuclear Plants

Main Report

Draft Report for Comment

Manuscript Completed: June 2009
Date Published: July 2009

Office of Nuclear Reactor Regulation

Cover Sheet

Responsible Agency: U.S. Nuclear Regulatory Commission, Office of Nuclear Reactor Regulation

Title: *Draft Generic Environmental Impact Statement for License Renewal of Nuclear Plants* (NUREG-1437) Volumes 1 and 2, Revision 1

For additional information or copies of this draft GEIS, contact:

Jennifer Davis
Office of Nuclear Reactor Regulation
Mail Stop O-11F1
11555 Rockville Pike
Rockville, Maryland 20852
Phone: 1-800-368-5642, extension 3835
Fax: (301) 415-2002
Email: LRGEISUpdate@nrc.gov

To submit comments:

Chief, Rules Review and Directives Branch
U.S. Nuclear Regulatory Commission
Mail Stop TWB-05-B01
Washington, DC 20555-0001

Electronic comments may be submitted to the NRC by e-mail at LRGEISUpdate@nrc.gov
Fax: (301) 415-2002

Abstract

U.S. Nuclear Regulatory Commission (NRC) regulations allow for the renewal of commercial nuclear power plant operating licenses, depending on the outcome of an assessment to determine whether the nuclear plant can continue to operate safely and protect the environment during the 20-year period of extended operation. Renewal of a nuclear power plant operating license requires the preparation of an environmental impact statement (EIS). To support the preparation of these EISs, the NRC published the *Generic Environmental Impact Statement for License Renewal of Nuclear Plants* (GEIS) in 1996. The proposed action considered in the GEIS is the renewal of nuclear power plant operating licenses.

The NRC committed to review and revise the GEIS on a 10-year cycle, if necessary. Since publication of the GEIS, approximately 30 plant sites (50 reactor units) have applied for license renewal and undergone environmental reviews, the results of which were published as supplements to the 1996 GEIS. This GEIS revision reviews and reevaluates the issues and findings of the 1996 GEIS. Lessons learned and knowledge gained during previous license renewal reviews provides a significant source of new information for this assessment. In addition, new research, findings, and other information were considered in evaluating the significance of impacts associated with license renewal.

The intent of the GEIS is to determine which issues would result in the same impact at all nuclear power plants, and which issues could result in different levels of impact at different plants and thus require a plant-specific analysis for impact determinations. The GEIS is intended to improve the efficiency of the license renewal process by (1) providing an evaluation of the types of environmental impacts that may occur as a result of renewing the license of a nuclear power plant, (2) identifying and assessing the impacts that are expected to be generic (the same or similar), and (3) defining the number and scope of impacts that need to be addressed in plant-specific EISs. The GEIS revision identifies 78 environmental impact issues for consideration in plant-specific supplements to the GEIS.

In addition to the impacts of continued operations and refurbishment, the GEIS evaluates other consequences of license renewal, including the environmental effects of postulated accidents and the effects of an additional 20 years of operation on the impacts of shutdown and decommissioning and on the uranium fuel cycle. The GEIS evaluates a full range of alternatives to the proposed action, including a no-action alternative (denial of license renewal), fossil energy alternatives, nuclear energy alternatives, renewable energy alternatives, conservation (demand-side management), and the purchase of power. For most impact areas, the proposed action would have impacts that would be similar to or less than impacts of the alternatives, in large part because most alternatives would require new power plant construction, whereas the proposed action would not.

Public Comments: In preparation of this Draft GEIS, NRC considered comments received from the public during the scoping period. Comments received after the close of the scoping comment period have been considered to the extent practicable. Locations and times of public meetings on this document will be announced in the *Federal Register*. Comments on this Draft GEIS will be accepted for a period of 75 days following publication of the Environmental Protection Agency's Notice of Availability in the *Federal Register* and will be considered in the preparation of the Final GEIS. Any comments received after the 75-day period will be considered to the extent practicable for the preparation of the Final GEIS.

Paperwork Reduction Act Statement

This NUREG contains information collection requirements that are subject to the Paperwork Reduction Act of 1995 (44 U.S.C. 3501 et seq.). These information collections were approved by the Office of Management and Budget, approval numbers 3150-0021.

Public Protection Notification

The NRC may not conduct or sponsor, and a person is not required to respond to, a request for information or an information collection requirement unless the requesting document displays a currently valid OMB control number.

Contents

Abstract/Cover Sheet iii
List of Figures xiii
List of Tables xv
Abbreviations and Acronyms xxi
Abbreviated Power Plant Names xxix
Units of Measure xxxi
Conversions xxxv

Summary S-1

S.1 Purpose and Need for the Proposed Action S-2
S.2 Scope of the Generic Environmental Impact Statement S-3
S.3 Impact Definitions and Categories S-4
S.4 Affected Environment S-6
S.5 Impacts from Continued Operations and Refurbishment Activities Associated with License Renewal S-6
S.6 Comparison of Alternatives S-19

1 Introduction 1-1

1.1 Purpose of the GEIS 1-2
1.2 Description of the Proposed Action 1-3
1.3 Purpose of and Need for the Proposed Action 1-3
1.4 Alternatives to the Proposed Action 1-4
1.5 Analytical Approach Used in the GEIS 1-4
1.5.1 Objectives 1-4
1.5.2 Methodology 1-4
1.6 Scope of the GEIS 1-7
1.7 Decisions to Be Supported by the GEIS 1-7
1.7.1 Changes to Plant Cooling Systems 1-9
1.7.2 Disposition of Spent Nuclear Fuel 1-9
1.7.3 Emergency Preparedness 1-10
1.7.4 Safeguards and Security 1-12
1.7.5 Need for Power 1-12
1.8 Implementation of the Rule (10 CFR Part 51) 1-13
1.8.1 General Requirements 1-13
1.8.2 Applicant's Environmental Report 1-13
1.8.3 NRC's SEIS 1-14
1.8.4 Public Scoping and Public Comments on NRC's Draft SEIS 1-14
1.8.5 NRC's Analysis and Preliminary Recommendation 1-15
1.8.6 NRC's Final SEIS 1-15

1.9 Public Comment Process for the GEIS 1-16
1.10 Lessons Learned 1-16
1.11 New Organization of the GEIS 1-17
1.12 References 1-18

2 Alternatives Including the Proposed Action 2-1

2.1 Proposed Action 2-2
2.1.1 Plant Operations During the License Renewal Term 2-2
2.1.2 Refurbishment and Other Supporting Activities During the License Renewal Term 2-4
2.1.3 Termination of Nuclear Power Plant Operations and Decommissioning After the License Renewal Term 2-4
2.1.4 Impacts of the Proposed Action 2-5
2.2 No-Action Alternative 2-17
2.3 Alternative Energy Sources 2-17
2.3.1 Alternative Electricity Generation 2-18
2.3.2 Fossil Fuel Energy Alternatives 2-19
2.3.3 New Nuclear Power Plant Alternatives 2-20
2.3.4 Renewable Energy Alternatives 2-20
2.3.5 Other Alternatives 2-27
2.4 Comparison of Alternatives 2-29
2.5 References 2-36

3 Affected Environment 3-1

3.1 Description of Nuclear Power Plant Facilities and Operations 3-1
3.1.1 External Appearance and Settings 3-1
3.1.2 Nuclear Reactor Systems 3-4
3.1.3 Cooling Water Systems 3-11
3.1.4 Radioactive Waste Treatment Systems 3-18
3.1.4.1 Liquid Radioactive Waste 3-18
3.1.4.2 Gaseous Radioactive Waste 3-19
3.1.4.3 Solid Radioactive Waste 3-20
3.1.5 Nonradioactive Waste Treatment Systems 3-21
3.1.6 Utility and Transportation Infrastructure 3-22
3.1.6.1 Electricity 3-22
3.1.6.2 Fuel 3-22
3.1.6.3 Water 3-23
3.1.6.4 Transportation Systems 3-23
3.1.6.5 Power Transmission System 3-24
3.1.7 Nuclear Power Plant Operations and Maintenance 3-25

3.2 Land Use and Visual Resources 3-26
3.2.1 Land Use 3-26
3.2.2 Visual Resources 3-29
3.3 Meteorology, Air Quality, and Noise 3-30
3.3.1 Meteorology and Climatology 3-30
3.3.2 Air Quality 3-35
3.3.3 Noise 3-47
3.4 Soils, Geology, and Seismology 3-49
3.5 Hydrology 3-50
3.5.1 Surface Water 3-50
3.5.1.1 Surface Water Use 3-51
3.5.1.2 Surface Water Quality 3-53
3.5.2 Groundwater 3-56
3.6 Ecology 3-57
3.6.1 Terrestrial Ecology 3-57
3.6.1.1 Upland Vegetation and Habitats 3-57
3.6.1.2 Floodplain and Wetland Vegetation and Habitats 3-59
3.6.1.3 Wildlife 3-60
3.6.2 Aquatic Ecology 3-62
3.6.2.1 Description of Aquatic Resources near Nuclear Power Plants 3-62
3.6.2.2 Overview of the Effects of Existing Nuclear Plant Operations and Transmission Lines on Aquatic Resources 3-69
3.6.3 Threatened, Endangered, and Protected Species and Essential Fish Habitat 3-71
3.6.3.1 Terrestrial Threatened and Endangered Species 3-73
3.6.3.2 Aquatic Threatened, Endangered, and Protected Species, Marine Mammals, and Essential Fish Habitat 3-74
3.7 Historic and Cultural Resources 3-78
3.7.1 Regulatory Framework 3-78
3.7.2 Prehistoric and Historic Era Historic and Cultural Resources 3-80
3.7.3 Traditional Cultural Properties 3-81
3.8 Socioeconomics 3-81
3.8.1 Power Plant Employment and Expenditures 3-81
3.8.2 Regional Economic Characteristics 3-83
3.8.2.1 Rural Economies 3-83
3.8.2.2 Semi-Urban Economies 3-86
3.8.3 Demographic Characteristics 3-88

3.8.4 Housing and Community Services 3-90
3.8.5 Local Transportation 3-92
3.9 Human Health 3-92
3.9.1 Radiological Exposure and Risk 3-92
3.9.1.1 Regulatory Requirements 3-93
3.9.1.2 Occupational Radiological Exposures 3-97
3.9.1.3 Public Radiological Exposures 3-116
3.9.1.4 Risk Estimates from Radiation Exposure 3-130
3.9.1.5 Conclusion 3-131
3.9.2 Chemical Hazards 3-131
3.9.3 Microbiological Hazards 3-133
3.9.3.1 Background Information on Microorganisms of Concern 3-134
3.9.3.2 Studies of Microorganisms in Cooling Towers 3-135
3.9.3.3 Microbiological Hazards to Plant Workers 3-136
3.9.3.4 Microbiological Hazards to the Public 3-137
3.9.4 Electromagnetic Fields 3-138
3.9.5 Other Hazards 3-139
3.9.5.1 Occupational Hazards 3-139
3.9.5.2 Shock Hazard 3-140
3.10 Environmental Justice 3-143
3.10.1 Subsistence Consumption of Fish and Wildlife 3-145
3.11 Waste Management and Pollution Prevention 3-146
3.11.1 Radioactive Waste 3-146
3.11.1.1 Low-Level Radioactive Waste 3-147
3.11.1.2 Spent Nuclear Fuel 3-150
3.11.2 Hazardous Waste 3-154
3.11.3 Mixed Waste 3-155
3.11.4 Nonradioactive, Nonhazardous Waste 3-155
3.11.5 Pollution Prevention and Waste Minimization 3-156
3.12 References 3-156

4 Environmental Consequences and Mitigating Actions 4-1

4.1 Introduction 4-1
4.1.1 Environmental Consequences of the Proposed Action 4-2
4.1.2 Environmental Consequences of Continued Operations and Refurbishment Activities during the License Renewal Term 4-3
4.1.3 Environmental Consequences of the No-Action Alternative 4-4
4.1.4 Environmental Consequences of Alternative Energy Sources 4-4

4.1.5 Environmental Consequences of Terminating Nuclear Power Plant Operations and Decommissioning 4-5
4.2 Land Use and Visual Resources 4-6
4.2.1 Environmental Consequences of the Proposed Action – Continued Operations and Refurbishment Activities 4-6
4.2.1.1 Land Use 4-6
4.2.1.2 Visual Resources 4-8
4.2.2 Environmental Consequences of Alternatives to the Proposed Action 4-9
4.2.2.1 Fossil Energy Alternatives 4-10
4.2.2.2 New Nuclear Alternatives 4-10
4.2.2.3 Renewable Alternatives 4-10
4.3 Air Quality and Noise 4-12
4.3.1 Environmental Consequences of the Proposed Action – Continued Operations and Refurbishment Activities 4-12
4.3.1.1 Air Quality 4-13
4.3.1.2 Noise 4-17
4.3.2 Environmental Consequences of Alternatives to the Proposed Action 4-18
4.3.2.1 Fossil Energy Alternatives 4-19
4.3.2.2 New Nuclear Alternatives 4-20
4.3.2.3 Renewable Alternatives 4-20
4.4 Geology and Soils 4-28
4.4.1 Environmental Consequences of the Proposed Action – Continued Operations and Refurbishment Activities 4-28
4.4.2 Environmental Consequences of Alternatives to the Proposed Action 4-28
4.4.2.1 Renewable Alternatives 4-29
4.5 Hydrology 4-30
4.5.1 Environmental Consequences of the Proposed Action – Continued Operations and Refurbishment Activities 4-30
4.5.1.1 Surface Water 4-30
4.5.1.2 Groundwater 4-39
4.5.2 Environmental Consequences of Alternatives to the Proposed Action 4-47
4.5.2.1 Fossil Energy Alternatives 4-48
4.5.2.2 New Nuclear Alternative 4-49
4.5.2.3 Renewable Alternatives 4-50

4.6 Ecology 4-51
4.6.1 Environmental Consequences of the Proposed Action – Continued Operations and Refurbishment 4-51
4.6.1.1 Terrestrial Ecology 4-51
4.6.1.2 Aquatic Ecology 4-78
4.6.1.3 Threatened, Endangered, and Protected Species and Essential Fish Habitat 4-109
4.6.2 Environmental Consequences of Alternatives to the Proposed Action 4-114
4.6.2.1 Fossil Energy Alternatives 4-114
4.6.2.2 Renewable Alternatives 4-115
4.7 Historic and Cultural Resources 4-116
4.7.1 Environmental Consequences of the Proposed Action – Continued Operations and Refurbishment 4-116
4.7.2 Environmental Consequences of Alternatives to the Proposed Action 4-119
4.7.2.1 Renewable Alternatives 4-120
4.8 Socioeconomics 4-121
4.8.1 Environmental Consequences of the Proposed Action – Continued Operations and Refurbishment Activities 4-121
4.8.2 Environmental Consequences of Alternatives to the Proposed Action 4-127
4.8.2.1 Fossil Fuel Alternatives 4-127
4.8.2.2 New Nuclear Alternatives 4-128
4.8.2.3 Renewable Alternatives 4-128
4.9 Human Health 4-129
4.9.1 Environmental Consequences of the Proposed Action – Continued Operations and Refurbishment Activities 4-129
4.9.1.1 Environmental Consequences of Normal Operating Conditions 4-129
4.9.1.2 Environmental Consequences of Postulated Accidents 4-152
4.9.2 Environmental Consequences of Alternatives to the Proposed Action 4-156
4.9.2.1 Fossil Energy Alternatives 4-157
4.9.2.2 New Nuclear Alternatives 4-159
4.9.2.3 Renewable Alternatives 4-159

4.10 Environmental Justice 4-161
4.10.1 Environmental Consequences of the Proposed Action – Continued Operations and Refurbishment Activities 4-161
4.10.2 Environmental Consequences of Alternatives to the Proposed Action 4-162
4.11 Waste Management and Pollution Prevention 4-163
4.11.1 Environmental Consequences of the Proposed Action – Continued Operations and Refurbishment Activities 4-163
4.11.2 Environmental Consequences of Alternatives to the Proposed Action 4-171
4.11.2.1 Fossil Fuel Alternatives 4-171
4.11.2.2 New Nuclear Alternatives 4-172
4.11.2.3 Renewable Alternatives 4-172
4.12 Impacts Common to All Alternatives 4-174
4.12.1 Environmental Consequences of Fuel Cycles 4-174
4.12.1.1 Uranium Fuel Cycle 4-174
4.12.1.2 Energy Alternative Fuel Cycles 4-187
4.12.2 Environmental Consequences of Terminating Nuclear Power Plant Operations and Decommissioning 4-191
4.12.2.1 Termination of Nuclear Power Plant Operations and Decommissioning of Existing Nuclear Power Plants 4-191
4.12.2.2 Termination of Plant Operations and Decommissioning of Energy Alternative Power Plants 4-214
4.13 Cumulative Impacts of the Proposed Action 4-220
4.13.1 Land Use 4-221
4.13.2 Visual Resources 4-222
4.13.3 Air Quality 4-222
4.13.4 Noise 4-222
4.13.5 Geology and Soils 4-223
4.13.6 Surface Water 4-223
4.13.7 Groundwater 4-223
4.13.8 Ecology 4-224
4.13.9 Historic and Cultural Resources 4-225
4.13.10 Socioeconomics 4-225
4.13.11 Human Health 4-226
4.13.12 Environmental Justice 4-226
4.13.13 Waste Management and Pollution Prevention 4-226

4.14 Resource Commitments Associated with the Proposed Action 4-227
4.14.1 Unavoidable Adverse Environmental Impacts 4-227
4.14.2 Relationship Between Short-Term Use of the Environment and Long-Term Productivity 4-229
4.14.3 Irreversible and Irretrievable Commitment of Resources 4-230
4.15 References 4-232

5 List of Preparers 5-1

6 Distribution List 6-1

7 Glossary 7-1

Figures

3.1-1 Operating Commercial Nuclear Power Plants in the United States 3-5

3.1-2 Pressurized Water Reactor 3-12

3.1-3 Boiling Water Reactor 3-12

3.1-4 Schematic Diagrams of Nuclear Power Plant Cooling Systems 3-16

3.3-1 Distribution of Tornado Strikes with Intensities of F2 or More over the Contiguous United States by One Degree of Latitude and Longitude Boxes 3-33

3.3-2 Expected Maximum Tornado Wind Speed with a Probability of One in 100,000 of Occurring over the Contiguous United States by Two Degrees of Latitude and Longitude Boxes. 3-34

3.3-3 Locations of Operating Nuclear Plants Relative to EPA-Designated 8-Hour Ozone Nonattainment Areas 3-38

3.3-4 Locations of Operating Nuclear Plants Relative to EPA-Designated 1-Hour Ozone Nonattainment Areas 3-39

3.3-5 Locations of Operating Nuclear Plants Relative to EPA-Designated PM_{10} Nonattainment Areas 3-40

3.3-6 Locations of Operating Nuclear Plants Relative to EPA-Designated $PM_{2.5}$ Nonattainment Areas 3-41

3.3-7 Locations of Operating Nuclear Plants Relative to EPA-Designated SO_2 Nonattainment Areas 3-42

3.3-8 Locations of Operating Nuclear Plants Relative to EPA-Designated NO_2 Nonattainment Areas 3-43

3.3-9 Locations of Operating Nuclear Plants Relative to EPA-Designated CO Maintenance and Nonattainment Areas 3-44

Figures

3.3-10 Locations of Operating Nuclear Plants Relative to EPA-Designated Pb Nonattainment Areas 3-45

3.9-1 Average, Median, and Extreme Values of the Annual Collective Dose per Reactor from 1992 to 2005 3-103

3.9-2 Collective Dose Distribution for All Commercial U.S. Reactors by Dose Range for 2001 Through 2005 3-116

3.11-1 Typical Dry Cask Storage Systems 3-152

3.11-2 Locations of Independent Spent Fuel Storage Installations 3-153

Tables

2.1-1 Summary of Impacts Associated with License Renewal Under the Proposed Action 2-6

2.4-1 Impacts of Construction Under the Proposed Action and Alternatives 2-31

2.4-2 Impacts of Operations Under the Proposed Action and Alternatives 2-32

2.4-3 Impacts of Postulated Accidents Under the Proposed Action and Alternatives 2-33

2.4-4 Impacts of Shutdown and Decommissioning Under the Proposed Action and Alternatives 2-34

2.4-5 Impacts of the Fuel Cycle Under the Proposed Action and Alternatives 2-35

3.1-1 Characteristics of Operating U.S. Commercial Nuclear Power Plants 3-6

3.1-2 Types of Cooling Systems Used at U.S. Commercial Nuclear Power Plants 3-13

3.2-1 Land Cover Within a 5-Mile Radius of U.S. Commercial Nuclear Power Plants 3-28

3.3-1 Fujita Tornado Intensity Scale 3-32

3.3-2 National Ambient Air Quality Standards 3-36

3.5-1 Overall Condenser Cooling Water Flow Rate and Consumptive Water Loss Rate per 1000 MW(e) 3-51

3.6-1 Factors That Influence the Impacts of Nuclear Power Plant Operation on Aquatic Resources 3-70

3.6-2 Number of ESA-Listed Species That Could Occur near Operating Nuclear Power Plants. 3-72

3.6-3 Operating Nuclear Power Plants for Which Essential Fish Habitat May Be a Consideration 3-77

Tables

3.8-1 State Employment, Expenditures, and Tax Revenues at 11 Nuclear Plants from 2003 Through 2006 3-82

3.8-2 Plant and Regional Employment and Earnings in Rural Locations..... 3-84

3.8-3 Local Economic Impacts of Plant Operations in Rural Locations 3-85

3.8-4 State Economic Impacts of Plant Operations in Rural Locations..... 3-85

3.8-5 Plant and Regional Employment and Earnings in Semi-Urban Locations ... 3-86

3.8-6 Local Economic Impacts of Plant Operations in Semi-Urban Locations..... 3-87

3.8-7 State Economic Impacts of Plant Operations in Semi-Urban Locations..... 3-88

3.8-8 Population Classification of Regions Around Selected Nuclear Power Plants..... 3-89

3.8-9 State and Local Tax Revenues Generated at Eight Nuclear Power Plants..... 3-91

3.9-1 Occupational Dose Limits for Adults Established by 10 CFR Part 20..... 3-93

3.9-2 Design Objectives and Annual Standards on Doses to the General Public from Nuclear Power Plants 3-96

3.9-3 Occupational Whole-Body Dose Data at U.S. Commercial Nuclear Power Plants 3-98

3.9-4 Annual Average Occupational Dose for U.S. Commercial Nuclear Power Plants..... 3-99

3.9-5 Collective and Individual Worker Doses at BWRs from 2003 through 2005..... 3-100

3.9-6 Collective and Individual Worker Doses at PWRs from 2003 through 2005..... 3-101

3.9-7 Annual Collective Dose and Annual Occupational Dose for Different Commercial Nuclear Power Plants from 1993 Through 2005..... 3-104

3.9-8 Annual Collective Dose for Commercial Nuclear Power Plants from 1993 Through 2005 3-107

3.9-9 Annual Average Measurable Occupational Doses at Commercial Nuclear Power Plant Sites from 1993 Through 2005 3-110

3.9-10 Annual Collective Occupational Dose per Plant for Commercial Nuclear Power Plants 3-113

3.9-11 Annual Individual Occupational Dose for Commercial Nuclear Power Plants 3-114

3.9-12 Number of Workers at BWRs and PWRs Who Received Whole-Body Doses Within Specified Ranges During 2005 3-115

3.9-13 Collective and Average CEDE for Commercial U.S. Nuclear Power Plant Sites in 2005 3-117

3.9-14 Doses from Gaseous Effluent Releases for 2004 Through 2006 3-121

3.9-15 Dose from Liquid Effluent Releases for 2004 Through 2006 3-123

3.9-16 Total Effective Dose Equivalent to the Maximally Exposed Individual for 2004 Through 2006 3-124

3.9-17 Average Annual Effective Dose Equivalent of Ionizing Radiation to a Member of the U.S. Population 3-125

3.9-18 Inadvertent Releases of Radioactive Liquids at Nuclear Power Plants 3-126

3.9-19 Dose from Inadvertent Releases of Radioactive Liquids at Nuclear Power Plants 3-128

3.9-20 Nominal Probability Coefficients Used in ICRP (1991) 3-130

3.9-21 Number and Rate of Fatal Occupational Injuries by Industry Sector in 2005 3-141

3.9-22 Employment and Incidence Rate of Nonfatal Occupational Injuries and Illnesses in Different Utilities in 2005 3-142

3.9-23 Number and Rate of Fatal Occupational Injuries for Selected Occupations in 2005 3-142

3.11-1 Solid Low-Level Radioactive Waste Shipped Offsite per Reactor from 10 Power Plant Sites in 2006 3-150

4.3.2.1-1 Projected Air Quality Impacts for Selected Power Production Technologies Burning Various Ranks of Coal 4-21

4.3.2.1-2 Performance and Cost Data for Fossil-Fuel-Fired Power Plants That Are Likely Alternatives to Retired Nuclear Reactors 4-23

4.5.2.1-1 Raw Water Usage Estimates for Fossil Fuel Electric Power Technologies 4-49

4.6.1.1-1 Estimated Radiation Dose Rates to Terrestrial Ecological Receptors for Radionuclides Measured in Water, Sediment, and Soils at U.S. Nuclear Power Plants 4-58

4.6.1.1-2 Contaminants Evaluated in Cooling Systems at Selected Power Plants 4-60

4.6.1.1-3 Estimated Annual Bird Collision Mortality in the United States 4-66

4.6.1.2-1 Fish Species Commonly Impinged or Entrained at Power Plants 4-81

4.6.1.2-2 Estimated Radiation Dose Rates to Aquatic Animals from Radionuclides Measured in Water and Sediments at U.S. Nuclear Power Plants 4-99

4.6.1.2-3 Significance Level of Aquatic Resources Impacts for License Renewal of Existing Nuclear Power Plants that Use Once-Through Cooling Systems .. 4-110

4.9.1.1-1 Additional Collective Occupational Dose for Different Actions Under Typical and Conservative Scenarios During the License Renewal Term 4-131

4.9.1.1-2 Radioactive Effluent Releases for Three Nuclear Power Plants That Recently Replaced Steam Generators 4-138

4.9.1.1-3 Dose to the Maximally Exposed Individual from Gaseous and Liquid Effluent Releases for Three Nuclear Power Plants That Recently Replaced Steam Generators 4-139

4.9.1.1-4 Magnetic Fields at Different Distances from Household Appliances 4-149

4.9.1.2-1 Summary of Issues Covered in Appendix E 4-155

S-3 Table Taken from 10 CFR 51.51 on Uranium Fuel Cycle Environmental Data 4-177

S-4 Table Taken from 10 CFR 51.52 on the Environmental Impact of Transporting Fuel and Waste to and from One Light-Water-Cooled Nuclear Power Reactor..... 4-181

4.12.1.1-1 Population Doses from Uranium Fuel Cycle Facilities Normalized to One Reference Reactor Year 4-185

Abbreviations and Acronyms

ABWR	advanced boiling water reactor
AC	alternating current
ACS	American Cancer Society
ACRS	Advisory Committee on Reactor Safeguards
ADAMS	Agencywide Documents Access and Management System
AEA	Atomic Energy Act
AGNIR	Advisory Group on Non-ionizing Radiation
ALARA	as low as reasonably achievable
ALI	annual limit on intake
ALWR	advanced light water reactor
ASME	American Society of Mechanical Engineers
BEIR	Biological Effects of Ionizing Radiation (National Research Council Committee)
BLS	U.S. Bureau of Labor Statistics
BPA	Bonneville Power Administration
BWR	boiling water reactor
CAA	Clean Air Act
CADHS	California Department of Health Services
CCS	carbon capture and storage
CCW	coal combustion waste
CDC	Centers for Disease Control and Prevention
CDF	core damage frequency
CEC	Commission for Environmental Cooperation
CEDE	committed effective dose equivalent
CEG	Constellation Energy Group
CEQ	Council on Environmental Quality
CERCLA	Comprehensive Environmental Response Compensation and Liability Act
CF	capacity factor
CFR	*Code of Federal Regulations*
CH_4	methane
CHP	combined heat and power
CO	carbon monoxide
CO_2	carbon dioxide
COL	combined operating license

CSP	concentrating solar power
CWA	Clean Water Act
CZMA	Coastal Zone Management Act
DC	direct current
DDREF	dose and dose rate effectiveness factor
DNC	Dominion Nuclear Connecticut
DOE	U.S. Department of Energy
DOL	U.S. Department of Labor
DSM	demand-side management
EA	environmental assessment
EAB	exclusion area boundary
ECRR	European Committee on Radiation Risk
EEI	Edison Electric Institute
EERE	Energy Efficiency and Renewable Energy
EEZ	Exclusive Economic Zone
EF	enhanced Fujita (scale)
EFH	essential fish habitat
EI	exposure index
EIA	Energy Information Administration
EIML	Environmental Incorporated Midwest Laboratory
EIS	environmental impact statement
EJ	environmental justice
ELF-EMF	extremely low frequency-electromagnetic field
EMF	electromagnetic field
EMF-RAPID	Electric and Magnetic Fields Research and Public Information Dissemination (Program)
EPA	U.S. Environmental Protection Agency
EPAct	Energy Policy Act of 2005
EPCRA	Emergency Planning and Community Right-to-Know Act
EPRI	Electric Power Research Institute
ER	environmental report
ERCOT	Electric Reliability Council of Texas
ERO	Electric Reliability Organization
ESA	Endangered Species Act
ESP	early site permit
F	Fujita (scale)
FAA	Federal Aviation Administration
FCC	Federal Communications Commission

FDOH	Florida Department of Health
FEMA	Federal Emergency Management Agency
FERC	Federal Energy Regulatory Commission
FES	final environmental statement
FGD	flue gas desulfurization
FICN	Federal Interagency Committee on Noise
FIFRA	Federal Insecticide, Fungicide, and Rodenticide Act
FPL	Florida Power & Light Company
FR	*Federal Register*
FRCC	Florida Reliability Coordinating Council
FWS	U.S. Fish and Wildlife Service
GALL	Generic Aging Lessons Learned
GAO	U.S. General Accounting Office (now U.S. Government Accountability Office)
GEIS	generic environmental impact statement
GIS	geographic information system
GNEP	Global Nuclear Energy Partnership
GTCC	greater than Class C
HAP	hazardous air pollutant
HAPC	habitat area of particular concern
HAWT	horizontal axis wind turbine
HCCP	Harvard Center for Cancer Prevention
HDR	hot dry rock
HFC	hydrofluorocarbon
HCFC	hydrochlorofluorocarbon
HHV	higher heating value
HLW	high-level (radioactive) waste
HVAC	heating, ventilation, and air conditioning
IAEA	International Atomic Energy Agency
IARC	International Agency for Research on Cancer
ICRP	International Commission on Radiological Protection
IDPH	Illinois Department of Public Health
IEEE	Institute of Electrical and Electronic Engineers
IGCC	integrated gasification combined cycle
INIRC	International Non-Ionizing Radiation Commission
IPEEE	Individual Plant Examination of External Events
IRPA	International Radiation Protection Association
ISFSI	independent spent fuel storage installation
ISI	in-service inspection

LERF	large early release frequency
LET	linear energy transfer
LLAP	*Legionella*-like amoebal pathogen
LLD	lower limit of detection
LLW	low-level (radioactive) waste
LLRWPA	Low-Level Radioactive Waste Policy Act
LLTF	Lessons Learned Task Force
LLWPAA	Low-Level Radioactive Waste Policy Act Amendments
LOEL	lowest observed effects level
LWR	light water reactor
MACT	maximum achievable control technology
MCAQ	Maricopa County Air Quality Department
MCL	maximum contaminant level
MEI	maximally exposed individual
MMPA	Marine Mammal Protection Act
MMS	Minerals Management Service
MSFCMA	Magnuson-Stevens Fishery Conservation and Management Act
MSW	municipal solid waste
MTBE	methyl tertiary butyl ether
NAAQS	National Ambient Air Quality Standards
NaCl	sodium chloride (salt)
NAICS	North American Industry Classification System
NAGPRA	Native American Graves Protection and Repatriation Act
$NaNO_2$	sodium nitrate
NAS	National Academy of Sciences
NCDC	National Climatic Data Center
NCRP	National Council on Radiation Protection and Measurement
NEI	Nuclear Energy Institute
NEPA	National Environmental Policy Act of 1969
NERC	North American Electric Reliability Corporation
NESC	National Electrical Safety Code
NETL	National Energy Technology Laboratory
NGCC	natural gas combined cycle
NHPA	National Historic Preservation Act of 1966
$(NH_4)SO_4$	ammonium sulfate
NIEHS	National Institute of Environmental Health Sciences
NIH	National Institutes of Health
NJDEP	New Jersey Department of Environmental Protection

NMC	Nuclear Management Company
NMFS	National Marine Fisheries Service
NO	nitrogen oxide
N_2O	nitrous oxide
NO_2	nitrogen dioxide
NOAA	National Oceanic and Atmospheric Administration
NORM	naturally occurring radioactive material
NOS	National Oceanic Service
NO_x	nitrogen oxides
NPCC	Northeast Power Coordinating Council
NPDES	National Pollutant Discharge Elimination System
NRC	U.S. Nuclear Regulatory Commission
NREL	National Renewable Energy Laboratory
NRHP	*National Register of Historic Places*
NRPB	National Radiological Protection Board
NSPS	New Source Performance Standards
NWI	National Waste Initiative; National Wetland Inventory
NWPA	National Waste Policy Act
NYSDEC	New York State Department of Environmental Conservation
NYSDOL	New York State Department of Labor
O_3	ozone
ODCM	Offsite Dose Calculation Manual
OPPD	Omaha Public Power District
OTA	Office of Technology Assessment
OSHA	Occupational Safety and Health Administration
PAH	polycyclic aromatic hydrocarbon
PARS	Publicly Available Record System
Pb	lead
PC	pulverized coal
PCB	polychlorinated biphenyl
PDR	Public Document Room
PEIS	programmatic environmental impact statement
PFC	perfluorinated carbon
PI	performance indicator
PILOT	payments in lieu of tax
$PM_{2.5}$	particulate matter with a mean aerodynamic diameter of 2.5 μm or less
PM_{10}	particulate matter with a mean aerodynamic diameter of 10 μm or less
PPE	personal protective equipment
PSD	prevention of significant deterioration

PTC	production tax credit
PURPA	Public Utility Regulatory Act of 1978
PV	photovoltaic
PWR	pressurized water reactor
RCRA	Resource Conservation and Recovery Act of 1976
RDF	refuse-derived fuel
REMP	Radiological Environmental Monitoring Program
RER	radiological effluent release
RERR	radiological effluent release report
RFC	Reliability First Corporation
ROW	right-of-way
RRC	Regional Reliability Council
RRY	reference reactor year
SAAQS	State Ambient Air Quality Standards
SAMA	severe accident mitigation alternatives
SCE	Southern California Edison
SCR	selective catalytic reduction
SDWA	Safe Drinking Water Act
SEIS	supplemental environmental impact statement
SER	safety evaluation report
SFP	spent fuel pool
SHPO	State Historic Preservation Office or Officer
SIP	State implementation plan
SMITTR	surveillance, monitoring, inspection, testing, trending, and recordkeeping
SO_2	sulfur dioxide
SOARCA	state-of-the-art reactor consequence analysis
SPAR	standardized plant analysis risk
SPDES	State Pollutant Discharge Elimination System
SPP	Southwest Power Pool
SSCs	systems, structures, and components
Stat.	Statutes at Large
TDS	total dissolved solids
TEDE	total effective dose equivalent
TESS	threatened and endangered species system
TLD	thermoluminescence dosimeter
TSCA	Toxic Substances Control Act
TSS	total suspended solids
TTU	Texas Tech University

TVA	Tennessee Valley Authority
TXU	TXU Generation Company
UCB	upper confidence bound
UCS	Union of Concerned Scientists
UF_6	uranium hexafluoride
UNSCEAR	United Nations Scientific Committee on the Effects of Atomic Radiation
UO_2	uranium dioxide
U_3O_8	triuranium octaoxide
USACE	U.S. Army Corps of Engineers
USC	*United States Code*
USCB	U.S. Census Bureau
USDA	U.S. Department of Agriculture
USFWS	U.S. Fish and Wildlife Service
USGS	U.S. Geological Survey
VOC	volatile organic compound
WCGS	Wolf Creek Generating Station
WCNOC	Wolf Creek Nuclear Operating Corporation
WEC	wave energy capture
WHO	World Health Organization

Abbreviated Power Plant Names

Arkansas	Arkansas Nuclear One
Beaver Valley	Beaver Valley Power Station
Braidwood	Braidwood Station
Browns Ferry	Browns Ferry Nuclear Plant
Brunswick	Brunswick Steam Electric Plant
Byron	Byron Station
Callaway	Callaway Plant
Calvert Cliffs	Calvert Cliffs Nuclear Power Plant
Catawba	Catawba Nuclear Station
Clinton	Clinton Power Station
Columbia	Columbia Generating Station
Comanche Peak	Comanche Peak Steam Electric Station
Cooper	Cooper Nuclear Station
Crystal River	Crystal River Nuclear Power Plant
Davis-Besse	Davis-Besse Nuclear Power Station
Diablo Canyon	Diablo Canyon Power Plant
D.C. Cook	Donald C. Cook Nuclear Plant
Dresden	Dresden Nuclear Power Station
Duane Arnold	Duane Arnold Energy Center
Farley	Joseph M. Farley Nuclear Plant
Fermi	Enrico Fermi Atomic Power Plant
FitzPatrick	James A. FitzPatrick Nuclear Power Plant
Fort Calhoun	Fort Calhoun Station
Ginna	R.E. Ginna Nuclear Power Plant
Grand Gulf	Grand Gulf Nuclear Station
Harris	Shearon Harris Nuclear Power Plant
Hatch	Edwin I. Hatch Nuclear Plant
Hope Creek	Hope Creek Generating Station
Indian Point	Indian Point Energy Center
Kewaunee	Kewaunee Power Station
LaSalle	LaSalle County Station
Limerick	Limerick Generating Station

McGuire	McGuire Nuclear Station
Millstone	Millstone Power Station
Monticello	Monticello Nuclear Generating Plant
Nine Mile Point	Nine Mile Point Nuclear Station
North Anna	North Anna Power Station
Oconee	Oconee Nuclear Station
Oyster Creek	Oyster Creek Nuclear Generating Station
Palisades	Palisades Nuclear Plant
Palo Verde	Palo Verde Nuclear Generating Station
Peach Bottom	Peach Bottom Atomic Power Station
Perry	Perry Nuclear Power Plant
Pilgrim	Pilgrim Nuclear Power Station
Point Beach	Point Beach Nuclear Plant
Prairie Island	Prairie Island Nuclear Generating Plant
Quad Cities	Quad Cities Nuclear Power Station
River Bend	River Bend Station
H.B. Robinson	H.B. Robinson Steam Electric Plant
St. Lucie	St. Lucie Nuclear Plant
Salem	Salem Nuclear Generating Station
San Onofre	San Onofre Nuclear Generating Station
Seabrook	Seabrook Station
Sequoyah	Sequoyah Nuclear Plant
South Texas	South Texas Project Electric Generating Station
Summer	Virgil C. Summer Nuclear Station
Surry	Surry Power Station
Susquehanna	Susquehanna Steam Electric Station
Three Mile Island	Three Mile Island, Unit 1
Turkey Point	Turkey Point Nuclear Plant
Vermont Yankee	Vermont Yankee Nuclear Power Station
Vogtle	Vogtle Electric Generating Plant
Waterford	Waterford Steam Electric Station
Watts Bar	Watts Bar Nuclear Plant
Wolf Creek	Wolf Creek Generating Station

Units of Measure

ac	acre(s)
bbl	barrel(s)
Btu	British thermal unit(s)
°C	degree(s) Celsius
cm	centimeter(s)
d	day(s)
dB	decibel(s)
°F	degree(s) Fahrenheit
ft	foot (feet)
ft^2	square foot (feet)
ft^3	cubic foot (feet)
gal	gallon(s)
gpd	gallon(s) per day
gpm	gallon(s) per minute
GWd/MT	gigawatt per day/metric tonne(s)
Gy	gray(s)
ha	hectare(s)
hr	hour(s)
Hz	hertz
in.	inch(es)
kg	kilogram(s)
km	kilometer(s)
kV	kilovolt(s)
kW	kilowatt(s)
kWh	kilowatt-hour(s)
L	liter(s)
lb	pound(s)
m	meter(s)
m^2	square meter(s)

m^3	cubic meter(s)
mA	milliampere(s)
mg	milligram(s)
mG	milligauss
mGy	milligray(s)
MHz	megahertz
mi	mile(s)
min	minute(s)
mL	milliliter(s)
MMBtu	million Btu
MPa	megapascal(s)
mph	mile(s) per hour
mrad	milliard(s)
mrem	millirem(s)
mSv	millisievert(s)
mT	milliTesla(s)
MT	metric tonne(s)
MTHM	metric tonne(s) of heavy metal
MTU	metric tonne(s) of uranium
MW	megawatt(s)
MWe or MW(e)	megawatt(s) electric
MW(t)	megawatt(s) thermal
MWh	megawatt-hour(s)
pCi	picocurie(s)
ppm	part(s) per million
ppmv	parts per million by volume
ppmvd	parts per million by volume, dry
ppt	part(s) per thousand
psi	pound(s) per square inch
rad	radian
rem	roentgen-equivalent-man
s	second(s)
scf	standard cubic foot (feet)
sV	sievert(s)
T	tesla(s)
TPY	ton(s) per year

V	volt(s)
yr	year(s)
μCi	microcurie(s)
μGy	microgray(s)
μm	micrometer(s)
μT	microtesla(s)

Conversions

Multiply	By	To Obtain
To Convert English to Metric Equivalents		
acres	0.4047	hectares (ha)
cubic feet (ft^3)	0.02832	cubic meters (m^3)
cubic yards (yd^3)	0.7646	cubic meters (m^3)
curies (Ci)	3.7×10^{10}	becquerels (Bq)
degrees Fahrenheit (°F) -32	0.5555	degrees Celsius (°C)
feet (ft)	0.3048	meters (m)
gallons (gal)	3.785	liters (L)
gallons (gal)	0.003785	cubic meters (m^3)
inches (in.)	2.540	centimeters (cm)
miles (mi)	1.609	kilometers (km)
pounds (lb)	0.4536	kilograms (kg)
rads	0.01	grays (Gy)
rems	0.01	sieverts (Sv)
short tons (tons)	907.2	kilograms (kg)
short tons (tons)	0.9072	metric tons (t)
square feet (ft^2)	0.09290	square meters (m^2)
square yards (yd^2)	0.8361	square meters (m^2)
square miles (mi^2)	2.590	square kilometers (km^2)
yards (yd)	0.9144	meters (m)
To Convert Metric to English Equivalents		
becquerels (Bq)	2.7×10^{-11}	curies (Ci)
centimeters (cm)	0.3937	inches (in.)
cubic meters (m^3)	35.31	cubic feet (ft^3)
cubic meters (m^3)	1.308	cubic yards (yd^3)
cubic meters (m^3)	264.2	gallons (gal)
degrees Celsius (°C) +17.78	1.8	degrees Fahrenheit (°F)
grays (Gy)	100	rads
hectares (ha)	2.471	acres
kilograms (kg)	2.205	pounds (lb)
kilograms (kg)	0.001102	short tons (tons)
kilometers (km)	0.6214	miles (mi)
liters (L)	0.2642	gallons (gal)
meters (m)	3.281	feet (ft)
meters (m)	1.094	yards (yd)
metric tons (t)	1.102	short tons (tons)
sieverts (Sv)	100	rems
square kilometers (km^2)	0.3861	square miles (mi^2)
square meters (m^2)	10.76	square feet (ft^2)
square meters (m^2)	1.196	square yards (yd^2)

Summary

The Atomic Energy Act of 1954 authorizes the U.S. Nuclear Regulatory Commission (NRC) to issue commercial nuclear power plant operating licenses for up to 40 years and permits the renewal of the licenses upon expiration. NRC regulations allow for the renewal of these operating licenses for up to an additional 20 years, depending on the outcome of safety and environmental assessments. There are no specific limitations in the Atomic Energy Act or the NRC's regulations restricting the number of times a license may be renewed.

The license renewal process is designed to assure safe operation of the nuclear power plant and protection of the environment during the license renewal term. Under the NRC's environmental protection regulations in Title 10, Part 51, of the *Code of Federal Regulations* (10 CFR Part 51), which implement Section 102(2) of the National Environmental Policy Act (NEPA), renewal of a nuclear power plant operating license requires the preparation of an environmental impact statement (EIS).

To support the preparation of these EISs, the NRC prepared the *Generic Environmental Impact Statement for License Renewal of Nuclear Plants* (GEIS), NUREG-1437, in 1996. The original 1996 GEIS[(a)] for license renewal was prepared to assess the environmental impacts associated with the continued operation of nuclear power plants during the license renewal term. The intent was to determine which environmental impacts would result in essentially the same impact at all nuclear power plants, and which ones could result in different levels of impacts at different plants and would require a plant-specific analysis to determine the impacts. For those issues that the NRC staff could not generically address, the NRC staff will develop plant-specific supplemental EISs (SEISs) to the GEIS.

The GEIS is intended to improve the efficiency of the license renewal process by (1) providing an evaluation of the types of environmental impacts that may occur from renewing commercial nuclear power plant operating licenses, (2) identifying and assessing impacts that are expected to be generic (the same or similar) at all nuclear plants (or plants with specified plant or site characteristics), and (3) defining the number and scope of environmental impact issues that need to be addressed in plant-specific EISs.

The NRC committed to review and update the GEIS, if necessary, on a 10-year cycle. Since publication of the GEIS in 1996, approximately 30 nuclear plant sites (50 reactor units) have been the subject of plant-specific environmental reviews. This revision to the GEIS is intended

(a) Any reference in this document to the 1996 GEIS (NUREG-1437; NRC 1996) includes the two-volume set published in 1996 and Addendum 1 to the GEIS published in 1999.

to incorporate lessons learned and knowledge gained from these plant-specific environmental reviews, as well as other pieces of new information and research published since the 1996 GEIS.

S.1 Purpose and Need for the Proposed Action

The proposed action is the renewal of commercial nuclear power plant operating licenses. The NRC reviews each application submitted by licensees of operating nuclear power plants. A renewed license is just one of a number of conditions that licensees must meet if the licensee is to continue plant operations during the renewal term.

The purpose and need for NRC's proposed action is to provide an option to continue plant operations beyond the current licensing term to meet future system generating needs. These needs and, ultimately, the decision to operate a nuclear power plant under a renewed operating license are to be determined by State, utility, system, and, where authorized, Federal (other than NRC) decision makers. Unless there are findings in the safety or the environmental reviews that would lead the NRC to reject a license renewal application, the NRC has no role in energy planning decisions. State regulatory agencies, system operators, power plant owners, and, in some cases other Federal agencies, ultimately decide whether the plant should continue to operate. From the perspective of the licensee and the State or system regulatory authorities, the purpose of renewing an operating license is to maintain the availability of the nuclear plant to meet system energy requirements beyond the term of the plant's current license.

The NRC has no authority or regulatory control over the ultimate selection of future energy alternatives. The NRC also cannot ensure that environmentally preferable energy alternatives are used in the future. While the NRC staff considers a wide range of alternatives to license renewal, the only alternative within NRC's decision-making authority is not to renew it. For the purposes of this GEIS, the NRC considers this option to be the No-Action Alternative.

At some point, all plants will terminate operations and undergo decommissioning. Under the No-Action Alternative, plant operations would terminate at or before the end of the current license term. The No-Action Alternative, unlike the other alternatives, does not expressly meet the purpose and need of the proposed action, as it does not provide a means of meeting future electric system needs. No action, on its own, would likely create a need for replacement power, conservation and energy efficiency (demand-side management), purchased power, or some combination of these options.

A full range of power generation alternatives are evaluated in the GEIS, including fossil fuel, new nuclear, and renewable energy sources. Conservation and power purchasing are also

considered as alternatives to license renewal, because they represent other options for electric system planners.

S.2 Scope of the Generic Environmental Impact Statement

The GEIS documents the results of the systematic approach NRC used to evaluate the environmental consequences of renewing the licenses of commercial nuclear power plants and operating the plants for an additional 20 years beyond the current license term. The environmental consequences of license renewal include (1) impacts associated with continued operations and refurbishment activities similar to those that have occurred during the current license term; (2) impacts of various alternatives to the proposed action; (3) impacts from the termination of nuclear power plant operations and decommissioning after the license renewal term (with emphasis on the incremental effect caused by an additional 20 years of operation); (4) impacts associated with the uranium fuel cycle; (5) impacts of postulated accidents (design-basis accidents and severe accidents); (6) cumulative impacts of the proposed action; and (7) resource commitments associated with the proposed action, including unavoidable adverse impacts, the relationship between short-term use and long-term productivity, and irreversible and irretrievable commitment of resources. The environmental consequences of these activities are evaluated in the GEIS.

In the 1996 GEIS, the NRC identified and assessed 92 environmental issues. This GEIS revision reviews and reevaluates the environmental impact issues and findings in the original GEIS. Experience gained from license renewal reviews conducted since the 1996 GEIS was published provides a source of new information for the evaluation presented in this revision. In addition, new research, findings, and other information were considered in evaluating the significance of impacts associated with license renewal. The purpose of the evaluation was to determine if the findings presented in the 1996 GEIS remain valid. In doing so, the NRC considered the need to modify, add to, or delete any of the 92 issues in the 1996 GEIS.

In a Notice of Intent published in the *Federal Register* on June 3, 2003, the NRC notified the public of its plan to revise the GEIS and to give people an opportunity to participate in the environmental scoping process. This step was the initial opportunity for public participation in the GEIS revision. In July 2003, the NRC held public scoping meetings in four locations (one in each of the four NRC regions) – Atlanta, Georgia; Oak Lawn, Illinois; Anaheim, California; and Boston, Massachusetts.

Participation in the scoping process by members of the public and local, State, Tribal, and Federal government agencies was encouraged and used to (1) determine the scope of the GEIS revision and identify whether there are any significant new issues that should be analyzed

in depth; (2) identify and eliminate from detailed study those issues that are peripheral, are not significant, or have been covered by prior environmental reviews; (3) identify any environmental assessments and other EISs that are being or will be prepared that are related to, but are not part of, the scope of the proposed action; and (4) identify other environmental review and consultation requirements related to the proposed action.

The initial scoping period for this GEIS revision was from June 3, 2003, to September 17, 2003, but scoping was reopened between September 27, 2005, and December 30, 2005. The NRC staff reviewed the transcripts and all written material received during the scoping period and identified individual comments. All comments and suggestions received orally during the scoping meetings or in writing were considered.

In evaluating the impacts of the proposed action and considering comments received from the public and agencies during the scoping period, the NRC identified 78 impact issues: 70 impact issues were associated with continued operations, refurbishment, and other supporting activities; 2 with postulated accidents; 1 with termination of plant operations and decommissioning; 4 with the uranium fuel cycle; and 1 with cumulative impacts. For all of these issues, the incremental effect of license renewal was the focus of the evaluation.

For each potential environmental impact issue, the revised GEIS (1) describes the nuclear power plant activity that could affect the resource, (2) identifies the resource that is affected, (3) evaluates past license renewal reviews and other available information, (4) assesses the nature and magnitude of the environmental impact on the affected resource, (5) characterizes the significance of the effect, (6) determines whether the results of the analysis apply to all nuclear power plants (whether the impact issue is Category 1 or Category 2), and (7) considers additional mitigation measures for adverse impacts.

The scope of the revised GEIS also evaluates the impacts of alternatives to license renewal, including alternative power generation (fossil, nuclear, and renewable energy), conservation and energy efficiency (demand-side management), and purchased power. It also evaluates the impacts from the no action alternative (not renewing the operating license). This GEIS includes the NRC's evaluation of construction, operation, postulated accidents, decommissioning, and fuel cycles for these alternatives.

S.3 Impact Definitions and Categories

The NRC's standard of significance for impacts uses the Council on Environmental Quality (CEQ) terminology for "significantly" (40 CFR 1508.27), which requires consideration of both "context" and "intensity." The NRC used the CEQ terminology to establish three significance

levels: small, moderate, and large. The definitions of the three significance levels, which are presented in the footnotes to Table B-1 of 10 CFR Part 51, Subpart A, Appendix B, follow:

- Small impact: Environmental effects are not detectable or are so minor that they will neither destabilize nor noticeably alter any important attribute of the resource. For the purposes of assessing radiological impacts, the Commission has concluded that those impacts do not exceed permissible level in the Commission's regulations are considered small.

- Moderate impact: Environmental effects are sufficient to alter noticeably, but not to destabilize, important attributes of the resource.

- Large impact: Environmental effects are clearly noticeable and are sufficient to destabilize important attributes of the resource.

In addition to a determination of significance of environmental impacts associated with an issue, a determination was made whether the analysis in the GEIS could be applied all nuclear plants (as well as to all plants with certain plant or site characteristics). Issues were assigned a Category 1 or Category 2 designation as follows:

Category 1 issues are those that meet all of the following criteria:

(1) The environmental impacts associated with the issue have been determined to apply either to all plants or, for some issues, to plants having a specific type of cooling system or other specified plant or site characteristics;

(2) A single significance level (i.e., small, moderate, or large) has been assigned to the impacts (except for collective offsite radiological impacts from the fuel cycle and from high-level waste and spent fuel);

(3) Mitigation of adverse impacts associated with the issue has been considered in the analysis, and it has been determined that additional plant-specific mitigation measures would probably not be sufficiently beneficial to warrant implementation.

For issues that meet the three Category 1 criteria, no additional plant-specific analysis is required in future SEISs unless new and significant information is identified.

Category 2 issues are those that do not meet one or more of the criteria of Category 1, and, therefore, require additional plant-specific review.

S.4 Affected Environment

For purposes of the evaluation in this GEIS revision, the “affected environment” is the environment currently existing around operating commercial nuclear power plants. Current conditions in the affected environment are the result of past construction and operations at the plants. The NRC has considered the effects of these past and ongoing impacts and how they have shaped the environment. The NRC evaluated impacts of license renewal that are incremental to existing conditions. These existing conditions serve as the baseline for the evaluation and include the effects of past and present actions at the plants.

The NRC described the affected environment in terms of the following resource areas and activities: (1) land use and visual resources; (2) meteorology, air quality, and noise; (3) soils, geology, and seismology; (4) hydrology (surface water and groundwater); (5) ecology (terrestrial and aquatic resources; threatened, endangered, and protected species and essential fish habitat); (6) historic and cultural resources; (7) socioeconomics; (8) human health; (9) environmental justice; and (10) waste management and pollution prevention. The affected environments of the operating plant sites represent diverse environmental conditions.

S.5 Impacts from Continued Operations and Refurbishment Activities Associated with License Renewal

NRC identified 78 impact issues from continued operations and refurbishment associated with license renewal. Ninteen of these issues were identified as Category 2 issues and would require plant-specific evaluations in future SEISs. The conclusions in each resource topical area are summarized here.

Land Use

- The impacts of continued operations and refurbishment on onsite land use are expected to be small at all nuclear plants. Changes in onsite land use from continued operations and refurbishment would be a small fraction of any nuclear power plant site and would involve only land that is controlled by the licensee. This is a Category 1 issue.

- The impacts of continued operations and refurbishment on offsite land use are expected to be small. Offsite land use would not be affected from continued operations and refurbishment associated with license renewal. This is a Category 1 issue.

- Transmission line right-of-ways (ROWs) would continue with no change in offsite land use restrictions. This is a Category 1 issue.

Visual Resources

- No important changes to the visual appearance (aesthetics) of plant structures or transmission lines are expected from continued operations and refurbishment. This is a Category 1 issue.

Air Quality

- Air quality impacts of continued operations and refurbishment activities are expected to be small. However, emissions during these activities could be a cause for concern at locations in or near air quality nonattainment or maintenance areas. The significance of the impact cannot be determined without considering the compliance status of each site and the activities that could occur. These impacts would be short-lived and cease after projects were completed.

  Emissions from testing emergency diesel generators and fire pumps and from routine operations of boilers used for space heating would not be a concern, even for those plants located in or adjacent to nonattainment areas. Although particulate emissions from cooling towers may be a concern for a very limited number of plants located in States that regulate such emissions, the impacts in even these worst-case situations have been small. Air quality in nonattainment and maintenance areas is plant-specific and is therefore a Category 2 issue.

- Production of ozone and oxides of nitrogen from transmission lines is insignificant and does not contribute measurably to ambient levels of these gases. This is a Category 1 issue.

Noise

- Noise levels would remain below regulatory guidelines for offsite receptors. This is a Category 1 issue.

Geology and Soils

- Impacts on geology and soils would be small at all plants if best management practices were employed to reduce erosion. This is a Category 1 issue.

Surface Water

- Impacts of continued operations and refurbishment on surface water quality and use are expected to be negligible if best management practices are employed to control soil erosion and spills. Water use would not increase significantly or would be reduced if a plant outage is necessary to accomplish action. This is a Category 1 issue.

- Altered current patterns would be limited to the area in the vicinity of the intake and discharge structures. These impacts have been small at operating nuclear power plants. This is a Category 1 issue.

- Effects on salinity gradients would be limited to the area in the vicinity of the intake and discharge structures. These impacts have been small at operating nuclear power plants. This is a Category 1 issue.

- Effects on thermal stratification would be limited to the area in the vicinity of the intake and discharge structures. These impacts have been small at operating nuclear power plants. This is a Category 1 issue.

- Scouring effects would be limited to the area in the vicinity of the intake and discharge structures. These impacts have been small at operating nuclear power plants. This is a Category 1 issue.

- Discharges of metals have not been found to be a problem at operating nuclear power plants with cooling-tower-based heat dissipation systems and have been satisfactorily mitigated at other plants. Discharges are monitored as part of the National Pollutant Discharge Elimination System (NPDES) permit process. This is a Category 1 issue.

- The effects of biocides, sanitary wastes, and minor chemical spills and discharges are regulated by State and Federal environmental agencies. Discharges are monitored as part of the NPDES permit process. These impacts have been small at operating nuclear power plants. This is a Category 1 issue.

- Water use conflicts have not been found to be a problem at operating nuclear power plants with once-through heat dissipation systems. This is a Category 1 issue.

- Water use conflicts could occur with plants that rely on cooling ponds or cooling towers using makeup water from a river with low flow. Impacts could be of small or moderate significance, depending on makeup water requirements, water availability, and competing water demands. This is a Category 2 issue.

- Dredging to remove accumulated sediments in the vicinity of intake and discharge structures and to maintain barge shipping has not been found to be a problem for surface water quality. Dredging is performed under permit from the U.S. Army Corps of Engineers. This is a Category 1 issue.

- Temperature effects on sediment capacity have not been found to be a problem at operating nuclear power plants and are not expected to be a problem during the license renewal term. This is a Category 1 issue.

Groundwater

- Impacts of continued operations and refurbishment on groundwater use and quality would be small, as extensive dewatering is not anticipated. The application of best management practices for handling any materials produced or used during activities would reduce impacts. This is a Category 1 issue.

- Groundwater use conflicts are not anticipated for plants that withdraw less than 100 gpm. This is a Category 1 issue.

- Groundwater use conflicts could occur with plants that withdraw more than 100 gpm (including those using Ranney wells). This is a Category 2 issue.

- For plants with closed-cycle cooling systems that withdraw makeup water from a river, water use conflicts could result from water withdrawals from rivers during low-flow conditions, which may affect aquifer recharge. The significance of impacts would depend on makeup water requirements, water availability, and competing water demands. This is a Category 2 issue.

- The impacts of groundwater withdrawals on groundwater quality are expected to be small at all nuclear plants. Groundwater withdrawals at operating nuclear power plants are not large enough to significantly affect groundwater quality. This is a Category 1 issue.

- The impacts of cooling ponds on groundwater quality are expected to be small at nuclear plants that employ such a cooling system in salt marshes. The infiltration of cooling water from unlined cooling ponds could potentially affect the quality of underlying groundwater; however, because groundwater in salt marshes is naturally brackish and not used for human consumption, this is not a concern for plants located in salt marshes. This is a Category 1 issue.

- The impacts of cooling ponds on groundwater quality could be small, moderate, or large at nuclear plants that employ such a cooling system at inland sites. The infiltration of cooling water from unlined cooling ponds could potentially affect the quality of underlying groundwater, and, for plants located inland, the quality of the groundwater in the vicinity of the ponds could be affected. The significance of the impact would depend on cooling pond water quality; site hydrogeologic conditions (including the interaction of surface water and groundwater); and the location, depth, and pump rate of water wells. This is a Category 2 issue.

- Groundwater and soil contamination could result in small or moderate impacts at all nuclear plants. Industrial practices involving the use of solvents, hydrocarbons, heavy metals, or other chemicals and unlined wastewater lagoons have the potential to contaminate site groundwater, soil, and subsoil. Contamination is subject to State- and U.S. Environmental Protection Agency (EPA)-regulated cleanup and monitoring programs. This is a Category 2 issue.

- Radionuclides released to groundwater, particularly tritium, could result in small or moderate impacts at all nuclear plants. Underground system leaks of process water have been discovered in recent years at several plants. Groundwater protection programs have been established at all operating nuclear power plants. This is a Category 2 issue.

Terrestrial Resources

- The impacts of continued plant operations on terrestrial ecosystems could be small, moderate, or large. The magnitude of impacts would depend on the nature of the refurbishment or other supporting activities. Application of best management practices would reduce the potential for impacts. The magnitude of impacts would depend on the nature of the activity, the status of the resources that could be affected, and the effectiveness of mitigation. This is a Category 2 issue.

- The impacts of the exposure of terrestrial organisms to radionuclides are expected to be small at all nuclear plants. Doses to terrestrial organisms are expected to be well below exposure guidelines developed to protect these organisms. This is a Category 1 issue.

- Cooling system impacts on terrestrial resources are expected to be small for all nuclear plants with once-through cooling systems or cooling ponds. No significant adverse effects to terrestrial plants or animals have been reported as a result of increased water temperatures, fogging, humidity, or reduced habitat quality. Because of the low concentrations of contaminants within the liquid effluent associated with cooling systems, uptake and accumulation of contaminants in the tissues of wildlife exposed to

contaminated water or aquatic food sources are not expected to be significant. This is a Category 1 issue.

- The impacts of cooling tower operations on vegetation are expected to be small for all nuclear plants with this type of cooling system. Impacts from salt drift, icing, fogging, or increased humidity associated with cooling tower operation have the potential to affect adjacent plant communities; however, these impacts have been small at operating nuclear power plants and are not expected to change over the license renewal term. This is a Category 1 issue.

- The impacts from bird collisions with cooling towers and transmission lines are expected to be small at all nuclear plants. Bird collisions with cooling towers and transmission lines occur at rates that are unlikely to affect local or migratory populations. This is a Category 1 issue.

- Water use conflicts with terrestrial resources for plants with cooling ponds or cooling towers using makeup water from a river with low flow could be small or moderate. Impacts on terrestrial resources in riparian communities affected by water use conflicts could be of moderate significance in some situations. This is a Category 2 issue.

- Transmission line ROW management impacts on terrestrial resources are expected to be small at all nuclear plants. Continued ROW management would not lower habitat quality or cause significant changes in wildlife populations in the surrounding habitat. This is a Category 1 issue.

- Impacts of electromagnetic fields on flora and fauna are expected to be small at all nuclear plants. No significant impacts of electromagnetic fields on terrestrial flora and fauna have been identified. Such effects are not expected to be a problem during the license renewal term. This is a Category 1 issue.

Aquatic Resources

- The impacts of impingement and entrainment of aquatic organisms could be small, moderate, or large at nuclear plants with once-through cooling systems or cooling ponds. The impacts of impingement and entrainment are small at many plants but may be moderate or even large at a few plants with once-through and cooling-pond cooling systems, depending on cooling system withdrawal rates and volumes and the aquatic resources at the site. This is a Category 2 issue.

- The impacts of impingement and entrainment of aquatic organisms are expected to be small at plants with cooling towers. Impingement and entrainment rates are low at

plants that use closed-cycle cooling with cooling towers because the rates and volumes of water withdrawal needed for makeup are minimized. This is a Category 1 issue.

- Thermal impacts on aquatic organisms are expected to be small at nuclear plants with cooling towers. Thermal effects associated with plants that use cooling towers are small because of the reduced amount of heated discharge from these types of systems. This is a Category 1 issue.

- Thermal impacts on aquatic organisms could be small, moderate, or large at nuclear plants with once-through cooling systems or cooling ponds. Most of the effects associated with thermal discharges are localized and are not expected to affect overall stability of populations or resources. However, the magnitude of impacts would depend on site-specific thermal plume characteristics and the nature of aquatic resources in the area. This is a Category 2 issue.

- The effects of cooling water discharge on dissolved oxygen, gas supersaturation, and eutrophication are expected to result in small impacts at all nuclear plants. Gas supersaturation was a concern at a small number of operating nuclear power plants with once-through cooling systems but has been satisfactorily mitigated. Low dissolved oxygen was a concern at one nuclear power plant with a once-through cooling system, but the problem has been effectively mitigated. Eutrophication (nutrient loading) and resulting effects on chemical and biological oxygen demands have not been found to be a problem at operating nuclear power plants. This is a Category 1 issue.

- The impacts of non-radiological contaminants on aquatic organisms are expected to be small at all nuclear plants. Best management practices and discharge limitations of NPDES permits are expected to minimize the potential for impacts to aquatic resources. Accumulation of metal contaminants has been a concern at a few nuclear power plants but has been satisfactorily mitigated by replacing copper alloy condenser tubes with those of another metal. This is a Category 1 issue.

- The impacts of radionuclides on aquatic organisms are expected to be small at all nuclear plants. Doses to aquatic organisms are expected to be well below exposure guidelines developed to protect these organisms. This is a Category 1 issue.

- The impacts of dredging on aquatic resources are expected to be small at all nuclear plants. Impacts of dredging on aquatic resources are relatively short-lived and localized. Such activities would require permits from the USACE, State environmental agencies, or other applicable regulatory authorities. This is a Category 1 issue.

- Water use conflicts with aquatic resources for plants with cooling ponds or cooling towers could be small or moderate. Impacts on aquatic resources in instream communities affected by water use conflicts could be of moderate significance in some situations. This is a Category 2 issue.

- The impacts of refurbishment and other supporting activities on aquatic resources are expected to be small at all nuclear plants. Application of best management practices to refurbishment projects near aquatic systems would reduce the potential for impacts. For actions that require plant shutdown, there would be short-term reductions in entrainment and impingement rates and thermal plume characteristics. This is a Category 1 issue.

- The impacts of transmission line ROW management on aquatic resources are expected to be small at all nuclear plants. Application of best management practices to ROW management near aquatic systems would reduce the potential for impacts. This is a Category 1 issue.

- The impacts associated with losses from predation, parasitism, and disease among organisms exposed to sublethal stresses are expected to be small at all nuclear plants. These types of losses have not been found to be a problem at operating nuclear power plants and are not expected to be a problem during the license renewal term. This is a Category 1 issue.

- Stimulation of nuisance organisms has been satisfactorily mitigated at the single nuclear power plant with a once-through cooling system where previously it was a problem and is small at all nuclear plants. It has not been found to be a problem at operating nuclear power plants with cooling towers or cooling ponds and is not expected to be a problem during the license renewal term. This is a Category 1 issue.

Threatened, Endangered, and Protected Species and Essential Fish Habitat

- The impacts on threatened, endangered, and protected species and essential fish habitats could be small, moderate, or large at nuclear plants. The magnitude of impacts would depend on the occurrence of listed species and habitats and the effects of power plant systems on them. Consultation with appropriate agencies would be needed to determine whether special status species or habitats are present and whether they would be adversely affected. This is a Category 2 issue.

Historic and Cultural Resources

- Impacts of continued operations and refurbishment activities on historic and cultural resources could be small, moderate, or large at nuclear plants. Continued operations and refurbishment are expected to have no more than small adverse impacts on historic and cultural resources because most impacts could be mitigated by avoiding those resources. The National Historic Preservation Act (NHPA) requires the Federal agency to consult with the State Historic Preservation Officer (SHPO) and appropriate Native American Tribes to determine the potential impacts and mitigation. This is a Category 2 issue.

Socioeconomics

- Impacts on employment and income and recreation and tourism would be small at all plants. Although most nuclear plants have large numbers of employees with higher than average wages and salaries, employment and income impacts from continued operations and refurbishment are expected to be small. Nuclear plant operations, employee spending, power plant expenditures, and tax payments have an effect on local economies. Changes in plant operations, employment, and expenditures would have a greater effect on rural economies than semi-urban economies. This is a Category 1 issue.

- Impacts on tax revenues would be small for all plants. Nuclear plants provide tax revenue to local jurisdictions in the form of property tax payments, payments-in-lieu-of-tax (PILOT) payments, or tax payments on energy production. The amount of tax revenue paid during the license renewal term is not expected to change, since the assessed value of the power plant, payments on energy production, and PILOT payments are also not expected to change. This is a Category 1 issue.

- Community services and education impacts would be small at all plants. With no increase in employment, value of the power plant, payments on energy production, and PILOT payments expected during the renewal term, community and educational services would not be affected by continued power plant operations. Changes in employment and tax payments would have a greater effect on jurisdictions receiving a large portion of annual revenues from the power plant than on jurisdictions receiving the majority of its revenues from other sources. This is a Category 1 issue.

- Population and housing impacts would be small for all plants. Regional population and housing availability and value would not change during the license renewal term unless significant changes in plant employment would occur. With no increase in employment expected during the license renewal term, population and housing availability and values

would not be affected by continued power plant operations. Any changes in population and housing availability and value due to changes in the workforce at the plant would have a greater effect on sparsely populated areas than areas with higher density populations. This is a Category 1 issue.

- Transportation impacts would be small at all plants. Traffic volumes would not change during the license renewal term unless significant changes in plant employment occurred. Any changes in employment would have a greater effect on rural areas with less developed local and regional networks. Impacts would be less noticeable in semi-urban areas, depending on the quality and extent of local access roads and the timing of plant shift changes when compared with typical local usage. This is a Category 1 issue.

Human Health

- Radiation exposures to the public from continued operations and refurbishment are expected to result in small impacts at all nuclear plants. Radiation doses to the public associated with license renewal are expected to continue at current levels and would be well below regulatory limits. This is a Category 1 issue.

- Radiation exposures to workers from continued operations and refurbishment are expected to result in small impacts at all nuclear plants. Occupational doses are expected to be within the range of doses experienced during the current license term and would continue to be well below regulatory limits. This is a Category 1 issue.

- Human health impacts from chemicals are expected to be small at all nuclear plants. Chemical hazards to workers would be minimized by observing good industrial hygiene practices. Chemical releases to the environment and the potential for impacts to the public are minimized by adherence to discharge limitations of NPDES permits. This is a Category 1 issue.

- Microbiological hazards to plant workers are expected to be small at all nuclear plants. Occupational health impacts are expected to be controlled by continued application of accepted industrial hygiene practices to minimize worker exposures. This is a Category 1 issue.

- Microbiological hazards to the public could result in small, moderate, or large impacts at plants with cooling ponds or canals or cooling towers that discharge to a river. These organisms are not expected to be a problem at most operating plants except possibly at plants using cooling ponds, lakes, or canals that discharge to rivers. Impacts would depend on site-specific characteristics. This is a Category 2 issue.

- The chronic effects of electromagnetic fields (EMFs) associated with nuclear plants and associated transmission lines are uncertain. Studies of 60-Hz EMFs have not uncovered consistent evidence linking harmful effects with field exposures. EMFs are unlike other agents that have a toxic effect (e.g., toxic chemicals and ionizing radiation) in that dramatic acute effects cannot be forced and longer-term effects, if real, are subtle. Because the state of the science is currently inadequate, no generic conclusion on human health impacts is possible. This issue has not been categorized.

- Physical occupational hazards are expected to result in small impacts at all nuclear plants. Occupational safety and health hazards are generic to all types of electrical generating stations, including nuclear power plants, and are of small significance if the workers adhere to safety standards and use personal protective equipment. This is a Category 1 issue.

- Electric shock hazards could result in small, moderate, or large impacts. Electrical shock potential is of small significance for transmission lines that are operated in adherence with the National Electrical Safety Code (NESC). Without a review of the conformance of each nuclear plant transmission line conformance with NESC criteria, it is not possible to determine the generic significance of the electrical shock potential. This is a Category 2 issue.

Postulated Accidents

- The NRC staff has concluded that the environmental impacts of design-basis accidents are of small significance for all nuclear plants. This is a Category 1 issue.

- The impacts of severe accidents are expected to be small at all nuclear plants. The probability-weighted consequences of atmospheric releases, fallout onto open bodies of water, releases to groundwater, and societal and economic impacts from severe accidents are small for all plants. However, alternatives to mitigate severe accidents must be considered for all plants that have not considered such alternatives. This is a Category 2 issue.

Environmental Justice

- Impacts of continued operations and refurbishment on minority and low-income populations associated with license renewal could be small, moderate, or large. Impacts to minority and low-income populations and subsistence consumption will be addressed in plant-specific reviews. See NRC Policy Statement on the Treatment of Environmental

Justice Matters in NRC Regulatory and Licensing Actions (69 FR 52040). This is a Category 2 issue.

Solid Waste Management

Because many of the offsite waste processing or disposal facilities also handle waste from other nuclear-fuel-cycle facilities, the evaluation of these issues considered wastes originating not just at the nuclear power plants but also at all other nuclear-fuel-cycle facilities.

- The impacts on low-level waste (LLW) storage and disposal are expected to be small at all nuclear plants. The comprehensive regulatory controls that are in place and the low public doses being achieved at reactors ensure that the radiological impacts on the environment would remain small during the term of a renewed license. This is a Category 1 issue.

- The impacts on onsite storage of spent nuclear fuel are expected to be small at all nuclear plants. The expected increase in the volume of spent fuel from an additional 20 years of operation can be safely accommodated onsite with small environmental effects through dry or pool storage at all plants, if a permanent repository or monitored retrievable storage is not available. This is a Category 1 issue.

- The offsite radiological impacts of spent nuclear fuel and high-level waste (HLW) disposal are expected to be small for all nuclear plants. With regard to the HLW and spent fuel disposal component of the fuel cycle, the EPA established a dose limit of 15 millirem (0.15 mSv) per year for the first 10,000 years and 100 millirem (1.0 mSv) per year between 10,000 years and 1 million years for offsite releases of radionuclides at the proposed repository at Yucca Mountain, Nevada. These limits are within the NRC's public dose limits contained in 10 CFR Part 20. This is a Category 1 issue.

- The impacts on mixed-waste storage and disposal are expected to be small at all nuclear plants. The comprehensive regulatory controls and the facilities and procedures that are in place ensure proper handling and storage, as well as negligible doses and exposure to toxic materials for the public and the environment at all plants. License renewal would not increase the small continuing risk to human health and the environment posed by mixed waste at all plants. The radiological and nonradiological environmental impacts of long-term disposal of mixed waste from any individual plant at licensed sites are small. This is a Category 1 issue.

- The impacts on nonradioactive waste storage and disposal are expected to be small at all nuclear plants. No changes to systems that generate nonradioactive waste are anticipated during the license renewal term. Facilities and procedures are in place to

ensure continued proper handling, storage, and disposal, as well as negligible exposure to toxic materials for the public and the environment at all plants. This is a Category 1 issue.

Cumulative Impacts

- Cumulative impacts are those impacts on the environment that result from the incremental impact of the proposed action when added to other past, present, and reasonably foreseeable future actions, regardless of what agency (Federal or non-Federal) or person undertakes such other actions. The cumulative impacts of license renewal must be considered on a plant-specific basis. Impacts will depend on regional resource characteristics, the resource-specific impacts of license renewal, and the cumulative significance of other factors affecting the resource. This is a Category 2 issue.

Uranium Fuel Cycle

- The individual offsite radiological impacts resulting from portions of the uranium fuel cycle, other than the disposal of spent fuel and HLW, are expected to be small for all nuclear plants. The impacts on individuals from radioactive gaseous and liquid releases during the license renewal term would remain at or below the NRC's regulatory limits. This is a Category 1 issue.

- The collective offsite radiological impacts from portions of the uranium fuel cycle other than the disposal of spent fuel and HLW are expected to be small for all nuclear plants. There are no regulatory limits applicable to collective doses to the general public from fuel-cycle facilities. The practice of estimating health effects based on collective doses may not be meaningful. All fuel-cycle facilities are designed and operated to meet the applicable regulatory limits and standards. The Commission concludes that the collective impacts are acceptable. The Commission concludes that the impacts would not be sufficiently large to require the NEPA conclusion, for any plant, that the option of extended operation under 10 CFR Part 54 should be eliminated. This is a Category 1 issue.

- The nonradiological impacts of the uranium fuel cycle are expected to be small for all nuclear plants. The nonradiological impacts of the uranium fuel cycle resulting from the renewal of an operating license for any plant would be small. This is a Category 1 issue.

- The transportation impacts of the uranium fuel cycle are expected to be small for all nuclear plants. The impacts of transporting materials to and from uranium-fuel-cycle

facilities on workers, the public, and the environment are expected to be small. Transportation of radioactive materials is governed by the applicable regulatory limits and standards. This is a Category 1 issue.

Termination of Nuclear Power Plant Operations and Decommissioning

- Termination of plant operations and decommissioning would occur eventually regardless of license renewal. The additional 20-year period of operation under the license renewal term would not affect the impacts of shutdown and decommissioning on any resource or at any plant. This is a Category 1 issue.

S.6 Comparison of Alternatives

The GEIS also evaluates the impacts of the proposed action (license renewal) and alternatives, including the No-Action Alternative (not renewing the operating license). It also evaluates the impacts of alternative power generation (fossil, nuclear, and renewable energy), conservation and energy efficiency (demand-side management), and purchased power. The impacts of renewing the operating license of a nuclear power plant are comparable to the impacts of energy alternatives. Replacement power alternatives would require the construction of a new power plant or modification of the electric transmission grid. The new power plants would also have operational impacts. Conversely, license renewal does not require major construction and operational impacts would not change beyond what is currently being experienced. Other alternatives that would not have construction or operational impacts include conservation and energy efficiency (demand-side management), delayed retirement, repowering, and purchased power.

Operational impacts of license renewal are comparable to replacement power alternatives and some renewable alternatives in some resource areas (socioeconomics), but quite different in other resource areas (air emissions, fuel cycle, land use, and water consumption). Renewable energy alternatives (wind, ocean wave, and ocean current alternatives) have very few operational impacts, while others (biomass combustion and conventional hydropower) can have considerable impacts. Some renewable energy alternatives (wind and solar) have relatively low but regionally variable capacity factors.

License renewal and alternatives differ in other respects, including the consequences of accidents. License renewal and new nuclear energy alternatives may have low-probability but potentially high-consequence accidents. In addition, fuel cycle impacts vary across alternatives. Some, like fossil fuel, require large amounts of land for fuel extraction.

Summary

Impacts from terminating power plant operations and decommissioning would vary between license renewal and alternatives. License renewal delays the date of reactor shutdown and decommissioning but does not alter the impact levels. Impacts would be small in all resource areas. In comparison, impacts from terminating operations and decommissioning of most alternatives would be larger than impacts from license renewal.

1. Introduction

The Atomic Energy Act of 1954 authorizes the U.S. Nuclear Regulatory Commission (NRC) to issue commercial nuclear power plant operating licenses for up to 40 years. The 40-year length of the original license period was imposed for economic and antitrust reasons rather than the technical limitations of the nuclear power plant. NRC regulations allow for the renewal of these operating licenses for up to an additional 20 years, depending on the outcome of an assessment determining whether the nuclear power plant can continue to operate safely and protect the environment during the 20-year period of extended operation. There are no specific limitations in the Atomic Energy Act or the NRC's regulations restricting the number of times a license may be renewed.

Contents of Chapter 1

- Purpose of the *Generic Environmental Impact Statement for License Renewal of Nuclear Plants* (GEIS), NUREG-1437 (Section 1.1)
- Description of the Proposed Action (Section 1.2)
- Purpose and Need for the Proposed Action (Section 1.3)
- Alternatives to the Proposed Action (Section 1.4)
- Analytical Approach Used in the GEIS (Section 1.5)
- Scope of the GEIS (Section 1.6)
- Decisions to Be Supported by the GEIS (Section 1.7)
- Implementation of the Rule (Section 1.8)
- The Public Comment Process (Section 1.9)
- Lessons Learned (Section 1.10)
- New Organization of the GEIS (Section 1.11)

The license renewal process is designed to assure the safe operation of the nuclear power plant and protection of the environment for up to an additional 20 years. Under the NRC's environmental protection regulations in Title 10, Part 51 of the *Code of Federal Regulations* (10 CFR Part 51), which implement the National Environmental Policy Act (NEPA), renewal of a nuclear power plant operating license requires the preparation of an environmental impact statement (EIS).

To support the preparation of these EISs, the NRC prepared the *Generic Environmental Impact Statement for License Renewal of Nuclear Plants* (GEIS), NUREG-1437 (NRC 1996, 1999). The original 1996 GEIS[(a)] for license renewal was prepared to assess the environmental

(a) Any reference in this document to the 1996 GEIS (NUREG-1437; NRC 1996) includes the two-volume set published in 1996 and Addendum 1 to the GEIS published in 1999.

impacts associated with the continued operation of nuclear power plants during the license renewal term. The intent of the GEIS is to determine which impacts would essentially be the same at all nuclear power plants and which ones could be different at different plants and would require a plant-specific analysis to determine the impacts.

1.1 Purpose of the GEIS

The GEIS for license renewal of nuclear power plants assesses the environmental impacts that could be associated with license renewal and an additional 20 years of power plant operation. This assessment is summarized in this GEIS. This GEIS also provides the technical basis for license renewal amendments to the Commission's regulations, 10 CFR Part 51, "Environmental Protection Regulations for Domestic Licensing and Related Regulatory Functions." In the 1996 GEIS and related rulemaking, the Commission determined that certain impacts associated with the renewal of a nuclear power plant operating license were the same or similar for all plants and could be treated on a generic basis. In this way, repetitive reviews of these impacts could be avoided. The Commission based its generic assessment of certain environmental impacts on the following factors:

> ***Generic Environmental Impact Statement (GEIS)***
>
> A GEIS is an environmental impact statement that assesses the scope and impact of the environmental effects that would be associated with an action (such as license renewal) at numerous sites.
>
> ***Supplemental Environmental Impact Statement (SEIS)***
>
> A SEIS updates or supplements an existing EIS (such as the GEIS). The Commission directed the NRC staff to issue plant-specific supplements to the GEIS for each license renewal application.

(1) License renewal will involve nuclear power plants for which the environmental impacts of operation are well understood as a result of lessons learned and knowledge gained from operating experience and completed license renewals.

(2) Activities associated with license renewal are expected to be within this range of operating experience; thus, environmental impacts can be reasonably predicted.

(3) Changes in the environment around nuclear power plants are gradual and predictable.

The GEIS is intended to improve the efficiency of the license renewal process by (1) providing an evaluation of the types of environmental impacts that may occur from renewing commercial nuclear power plant operating licenses, (2) identifying and assessing impacts that are expected to be generic (the same or similar) at all nuclear plants (or plants with specified plant or site characteristics), and (3) defining the number and scope of environmental impact issues that need to be addressed in plant-specific EISs. The GEIS provides information that will aid in the preparation of plant-specific EISs.

The Commission has stated that, on a 10-year cycle, it intends to review its assessment of impacts in the GEIS and revise it, if necessary. The first 10-year cycle ended in 2006, and this draft GEIS is the first revision of the original 1996 statement.

1.2 Description of the Proposed Action

Under NRC's environmental protection regulations in 10 CFR Part 51.20, renewal of a nuclear power plant operating license is identified as a major Federal action that requires the preparation of an EIS to address the impacts of renewing a plant's operating license. The EIS requirements for a plant-specific license renewal review are specified in 10 CFR Parts 51.71 and 51.95. NRC's public health and safety and other technical requirements for the renewal of operating licenses are found in 10 CFR Part 54. Part 54 requires applicants to perform safety evaluations and assessments of nuclear plants and provide the NRC with sufficient information to analyze the impacts of continued operation for the requested renewal term. Applicants are required to assess the effects of aging on passive systems, structures, and components.

The Proposed Action

To renew commercial nuclear power plant operating licenses.

Purpose and Need for the Proposed Action

To provide the option to continue plant operations beyond the current operating license term.

Most utilities are expected to begin preparation for license renewal about 10 to 20 years before expiration of their current operating licenses. Inspection, surveillance, test, and maintenance programs for continued plant operations would be integrated gradually over a period of years. Any refurbishment-type activities undertaken for the purposes of license renewal have generally been completed during normal plant refueling or maintenance outages before the original license expires. Activities associated with license renewal and operation of a plant for an additional 20 years are discussed in Chapter 2.

1.3 Purpose and Need for the Proposed Action

The Commission acts on each application submitted by a licensee for the renewal of commercial nuclear power plant operating licenses per Section 103 of the Atomic Energy Act. A renewed license is just one of a number of conditions that licensees must meet to operate its nuclear plant during the license renewal term. State regulatory agencies and the owners of the plant ultimately decide whether the plant will continue to operate. Economic and environmental considerations play a primary role in this decision. Therefore, the purpose and need for the proposed action (i.e., renewal of a commercial nuclear power plant operating license) is to provide the option to continue plant operations beyond the current operating license term.

The purpose and need for the proposed action have no role in the energy planning decisions of State regulators and utility officials as to whether a particular nuclear power plant should continue to operate. From the perspective of the licensee and the State regulatory authority, the purpose of renewing an operating license is to maintain the availability of the nuclear plant to meet system energy requirements beyond the term of the plant's current license. In cases of interstate generation or other special circumstances, Federal agencies such as the Federal Energy Regulatory Commission (FERC) or the Tennessee Valley Authority (TVA) may be involved in making these decisions.

1.4 Alternatives to the Proposed Action

The NRC has considered the environmental consequences of the no-action alternative (i.e., not renewing the license) and the environmental consequences of various alternatives for replacing generating capacity. No conclusions are made in the GEIS about the relative environmental consequences of license renewal and the construction and operation of alternative facilities for generating electric energy. The information in the GEIS is used by the NRC and applicants in performing the plant-specific analysis of alternatives.

For plant-specific reviews, the NRC will compare the environmental impacts of license renewal with those of alternative energy sources to determine whether the adverse environmental impacts of license renewal are so great that preserving the option of license renewal for energy planning decision makers would be unreasonable.

1.5 Analytical Approach Used in the GEIS

1.5.1 Objectives

The GEIS serves to streamline NRC's environmental review process by identifying and evaluating environmental impacts that are generic and common to all power plants. Plant-specific impacts will be addressed in supplemental EISs (SEISs) to the GEIS. The SEISs will examine a generic impact only if there is new and significant information.

1.5.2 Methodology

Environmental impacts of license renewal and the resources that could be affected by continued operation were identified. The general analytical approach for identifying environmental impacts was to (1) describe the nuclear power plant activity that could affect the resource, (2) identify the resource that is affected, (3) evaluate past license renewal reviews and other available information, (4) assess the nature and magnitude of the environmental impact on the affected

resource, (5) characterize the significance of the effects, (6) determine whether the results of the analysis apply to all nuclear power plants (whether the impact issue is Category 1 or Category 2), and (7) consider additional mitigation measures for adverse impacts. Identifying environmental impacts (or issues) was conducted in an iterative rather than a stepwise manner. For example, after information was collected and levels of significance were reviewed, impacts were reexamined to determine if any should be removed, added, recombined, or split apart.

Defining Environmental Issues

An initial list of 92 environmental issues (or impacts) was identified in the 1996 GEIS. Public and stakeholder comments on previous plant-specific license renewal reviews were analyzed in an effort to reevaluate the existing issues and identify new issues. Environmental issues in this GEIS are arranged by resource area. This perspective is a change from the 1996 GEIS, in which environmental issues were arranged by power plant systems.

Collecting Information

Information from previous license renewal reviews was collected and reviewed. Searches of the open scientific literature reports, databases, and Web sites were conducted for each resource area. This information was collected and evaluated to determine if the environmental issues and findings in the 1996 GEIS needed to be revised.

Determining Significance Levels for Issues

A standard of significance was established for assessing environmental issues. Significance indicates the importance of likely environmental impacts and is determined by considering two variables: context and intensity. Context is the geographic, biophysical, and social context in which the effects will occur. In the case of license renewal, the context is the environment surrounding the facility. Intensity refers to the severity of the impact, in whatever context it occurs. The NRC developed a three-level standard of significance based upon the President's Council on Environmental Quality (CEQ) guidelines (40 CFR 1508.27):

- Small – environmental effects are not detectable or are so minor that they will neither destabilize nor noticeably alter any important attribute of the resource. For the purposes of assessing radiological impacts, the Commission has concluded that those impacts that do not exceed permissible levels in the Commission's regulations are considered small.

- Moderate – environmental effects are sufficient to noticeably alter important attributes of the resource but not to destabilize them.

- Large – environmental effects are clearly noticeable and are sufficient to destabilize.

The discussion of each environmental issue in the GEIS includes an explanation of how the significance category was determined. For issues in which the probability of occurrence is a key consideration (i.e., accident consequences), the probability of occurrence has been factored into the determination of significance.

In addition to determining the significance of environmental impacts associated with an issue, a determination was made whether the analysis in the GEIS could be applied to all plants. The categories to which an issue may be assigned are presented below.

- **Category 1** – the analysis reported in the GEIS has shown the following:

  (1) The environmental impacts associated with the issue have been determined to apply either to all plants or, for some issues, to plants having a specific type of cooling system or other specified plant or site characteristics;

  (2) A single significance level (i.e., small, moderate, or large) has been assigned to the impacts (except for collective offsite radiological impacts from the fuel cycle and from high-level waste and spent fuel); and

  (3) Mitigation of adverse impacts associated with the issue has been considered in the analysis, and it has been determined that additional plant-specific mitigation measures would probably not be sufficiently beneficial to warrant implementation.

  The generic analysis of an issue may be adopted in each plant-specific review.

- **Category 2** – the analysis reported in the GEIS has shown that one or more of the criteria of Category 1 cannot be met, and therefore, additional plant-specific review is required.

If all three Category 1 criteria apply to a particular issue, then the generic analysis presented in this GEIS is relied upon by the NRC in evaluating license renewal applications and plant-specific SEISs provided there is no new and significant information requiring further analysis. For issues that do not meet all three Category 1 criteria, then the issue is considered a Category 2 issue, and a plant-specific analysis is required for that issue.

1.6 Scope of the GEIS

In the 1996 GEIS, the NRC staff assessed 92 environmental issues. Sixty-nine of these issues were determined to be Category 1 and were identified as not requiring additional plant-specific analysis. Guidance on plant-specific analyses required for the other 23 (Category 2) issues is provided in 10 CFR Part 51. Those environmental issues were listed in Table B-1 of Appendix B to Subpart A of 10 CFR Part 51 (Table B-1). This GEIS revision reviews and reevaluates the issues and findings of the 1996 GEIS. Lessons learned and knowledge gained during previous license renewal reviews provide significant sources of new information for this assessment. Since 1996, over 30 nuclear plants have undergone license renewal and environmental review. In addition, new research, findings, and other information were considered when the significance of impacts associated with license renewal was being evaluated. The purpose of the evaluation was to determine if the findings presented in the 1996 GEIS remain valid. In doing so, the NRC staff considered the need to modify, add to, or delete any of the 92 issues in the 1996 GEIS. After this evaluation, the staff carried forward 78 impact issues for detailed consideration in this GEIS revision.

1.7 Decisions to Be Supported by the GEIS

The decisions to be to be supported by the GEIS are whether to renew the operating licenses of individual nuclear power plants for an additional 20 years of operation. The GEIS was developed to support these decisions and to serve as a basis for tiering future NEPA analyses regarding the license renewal of individual nuclear power plants. The GEIS provides the NRC decision maker with important environmental information considered common to all nuclear power plants.

Environmental Impact Statements

10 CFR 51.70(b): The draft environmental impact statement . . . will state how alternatives considered in it and decisions based on it will or will not achieve the requirements of sections 101 and 102(1) of NEPA. (See also the Council on Environmental Quality (CEQ) Regulations for Implementing NEPA, 40 CFR 1502.2(d).)

The scope consists of the range of actions, alternatives, and impacts to be considered in an EIS. The purpose of scoping is to identify the significant issues related to the proposed action. Scoping also identifies and eliminates from detailed study issues that are not significant or have been covered by a prior environmental review. Having a defined scope for the environmental review allows the NRC to concentrate on the essential issues of actions being considered rather than on issues that may have been or are being evaluated in different regulatory review processes, such as the safety review (NRC 2006).

The NEPA process focuses on environmental impacts rather than on issues related to safety. Safety issues become important to the environmental review when they could result in environmental impacts, which are why the environmental effects of postulated accidents are considered in a plant-specific supplement to the GEIS on license renewal (SEIS). Since NEPA regulations do not provide for a safety review, the license renewal process includes an environmental review that is distinct and separate from the safety review. Since the two reviews are separate, operational safety issues and safety issues related to aging are considered outside the scope for the environmental review, just as the environmental issues are not considered as part of the safety review. However, safety issues that are raised during the environmental review are forwarded to the appropriate NRC organization for consideration and appropriate action (NRC 2006).

Actions subject to NRC approval for license renewal are limited to continued nuclear power plant operation consistent with the plant design and operating conditions for the current operating license and to the performance of specific activities and programs necessary to manage the effects of aging on the passive, long-lived structures and components identified in accordance with 10 CFR Part 54. Accordingly, the GEIS does not serve as the NEPA review for other activities or programs outside the scope of NRC's Part 54 license renewal review.

Separate NEPA reviews must be prepared regardless of whether the action is necessary as a consequence of receiving a renewed license, even if the activity were specifically addressed in the GEIS. For example, the environmental impacts of spent fuel pool expansion are addressed in the GEIS in the context of the environmental consequences of approving a renewed operating license, rather than in the context of a specific application to expand spent fuel pool capacity, which would require a separate NEPA review. These separate NEPA reviews may reference and otherwise use applicable environmental information contained in the GEIS. For example, an environmental assessment prepared for a separate spent fuel pool expansion request may use the information in the GEIS to support a finding of no significant impact (see June 5, 1996 Final Rule [61 FR 28467]).

There are many factors that NRC takes into consideration when deciding whether to renew the operating license of a nuclear power plant. The analyses of environmental impacts evaluated in this GEIS will provide NRC's decision maker (in this case, the Commission) with important environmental information for use in the overall decision-making process.

There are also decisions outside the regulatory scope of license renewal that cannot be made on the basis of the final GEIS analysis. These decisions include the following five issues.

1.7.1 Changes to Plant Cooling Systems

The NRC will not make a decision or any recommendations on the basis of information presented in this GEIS regarding changes to nuclear power plant cooling systems, other than those involving safety-related issues, to mitigate adverse impacts under the jurisdiction of State or other Federal agencies. Implementation of the provisions of the Clean Water Act, including those regarding cooling system operations and design specifications, is the responsibility of the U.S. Environmental Protection Agency (EPA). In many cases, the EPA delegates such authority to the individual States. To operate a nuclear power plant, licensees must comply with the Clean Water Act and associated requirements imposed by the EPA or the State as part of the National Pollutant Discharge Elimination System (NPDES) permitting system. The EPA or the State, not the NRC, sets the limits of effluents and operational parameters in plant-specific NPDES permits. Nuclear power plants cannot operate without a valid NPDES permit.

1.7.2 Disposition of Spent Nuclear Fuel

The NRC will not make a decision or any recommendations on the basis of the information presented in this GEIS regarding the disposition of spent nuclear fuel at nuclear power plants. The NRC's Waste Confidence Rule (10 CFR 51.23) leaves the onsite storage of spent nuclear fuel during the term of plant operation as the only option at the time of license renewal. Within the context of a license renewal environmental review, the NRC concluded that the storage of spent nuclear fuel can be accomplished safely and without significant environmental impacts. Human health impacts continue to be well within regulatory limits, and the radiological impacts of onsite storage continue to meet the standard for a conclusion of small impact. Nonradiological environmental impacts continue to be small. The overall conclusion for onsite storage of spent nuclear fuel during the license renewal term is that the environmental impacts will be small for each plant. Within the context of renewal, the NRC concludes that its regulatory requirements already in place provide adequate mitigation incentives for the onsite storage of spent nuclear fuel.

The NRC is confident that there will eventually be a licensed high-level waste repository. If the site near Yucca Mountain is eventually found to be unsuitable, alternative sites will be considered. Until a permanent high-level waste repository is operational, the spent nuclear fuel will be safely stored either onsite or at offsite interim storage facilities (NRC 2006).

In 1982, the Congress enacted the Nuclear Waste Policy Act (NWPA), and on January 7, 1983, the President signed it into law. This legislation defined the Federal Government's responsibility to provide permanent disposal in a deep geologic repository for spent fuel and high-level radioactive waste from commercial and defense activities. Under amended provisions (1987) of this Act, the Department of Energy (DOE) has the responsibility to locate, build, and operate a repository for such wastes. The NRC has the responsibility to establish regulations governing

the construction, operation, and closure of the repository, consistent with environmental standards established by the EPA.

The 1987 amendments required DOE to evaluate only the suitability of the site at Yucca Mountain, Nevada, for a geologic disposal facility. In addition, the amendments outlined a detailed approach for the disposal of high-level radioactive waste involving review by the President, Congress, State and Tribal governments, NRC, and other Federal agencies. In February 2002, after many years of studying the suitability of the site, DOE recommended to the President that the Yucca Mountain site be developed as a long-term geologic repository for high-level waste. In April 2002, the Governor of Nevada notified Congress of his State's objection to the proposed repository. Subsequently, Congress voted to override the objection of the State.

DOE submitted a license application to the NRC for construction authorization for a repository at Yucca Mountain in June 2008. The Act specifies that the NRC will issue a decision on the license application within three years after receiving the DOE application. The NRC will issue a license only if DOE can demonstrate that it can construct and operate the repository safely and comply with NRC regulations. NRC decisions and recommendations concerning the ultimate disposition of spent nuclear fuel are ongoing and outside the regulatory scope of this GEIS.

1.7.3 Emergency Preparedness

The NRC will not make a decision or any recommendations on the basis of information presented in this GEIS regarding emergency preparedness at nuclear power plants. Nuclear power plant owners, government agencies, and State and local officials work together to create a system for emergency preparedness and response that will serve the public in the unlikely event of an emergency. The emergency plans for nuclear power plants cover preparations for evacuation, sheltering, and other actions to protect residents near plants in the event of a serious incident.

In the United States, 104 commercial nuclear power reactors are licensed to operate at 65 sites in 31 States. For each site, there are onsite and offsite emergency plans to assure that adequate protective measures can be taken to protect the public in the event of a radiological emergency. Federal oversight of emergency preparedness for licensed nuclear power plants is shared by the NRC and Federal Emergency Management Agency (FEMA). The NRC and FEMA have a Memorandum of Understanding (44 CFR Appendix A to Part 353), under which FEMA has the lead in overseeing offsite planning and response and the NRC assists FEMA in carrying out this role. The NRC has statutory responsibility for the radiological health and safety of the public and retains the lead for oversight of onsite preparedness.

Before a plant is licensed to operate, the NRC must have “reasonable assurance that adequate protective measures can and will be taken in the event of a radiological emergency.” The NRC’s decision of reasonable assurance is based on licensees complying with NRC regulations and guidance. In addition, licensees and area response organizations must demonstrate they can effectively implement emergency plans and procedures during periodic evaluated exercises. As part of the reactor oversight process, the NRC reviews licensees’ emergency planning procedures and training. These reviews include regular drills and exercises that assist licensees in identifying areas for improvement, such as in the interface of security operations and emergency preparedness. Each plant owner is required to exercise its emergency plan with the NRC, FEMA, and offsite authorities at least once every two years to ensure that State and local officials remain proficient in implementing their emergency plans. Licensees also self-test their emergency plans regularly by conducting drills.

FEMA findings and determinations as to the adequacy and capability of implementing offsite plans are communicated to the NRC. The NRC reviews the FEMA findings and determinations as well as the onsite findings. The NRC then makes a determination on the overall state of emergency preparedness. These overall findings and determinations are used by the NRC to make radiological health and safety decisions before issuing licenses and in the continuing oversight of operating reactors. The NRC has the authority to take action, including shutting down any reactor deemed not to provide reasonable assurance of the protection of public health and safety.

The Commission considered the need for a review of emergency planning issues in the context of license renewal during its rulemaking proceedings on 10 CFR Part 54, which included public notice and comment. As discussed in the statement of consideration for rulemaking (56 FR 64966), the programs for emergency preparedness at nuclear power facilities apply to all nuclear power facility licensees and require the specified levels of protection from each licensee regardless of plant design, construction, or license date. Requirements related to emergency planning are in the regulations at 10 CFR 50.47 and Appendix E to 10 CFR Part 50. These requirements apply to all operating licenses and will continue to apply to facilities with renewed licenses. Through its standards and required exercises, the Commission reviews existing emergency preparedness plans throughout the life of any facility, keeping up with changing demographics and other site-related factors.

After the terrorist attacks of September 2001, the NRC issued security related orders and guidance to nuclear power plants. These orders and guidance include interim measures for emergency planning. Nuclear industry groups and Federal, State, and local government agencies assisted in the prompt implementation of these measures and participated in drills and exercises to test these new planning elements. The NRC has reviewed licensees’ commitments to address these requirements and verified the implementation through inspections to ensure public health and safety.

The NRC and other Federal agencies have heightened vigilance and implemented initiatives to evaluate and respond to possible threats posed by terrorists, including the use of aircraft against commercial nuclear power facilities and independent spent fuel storage installations. These acts remain speculative and beyond the regulatory scope of a license renewal review. The NRC routinely assesses threats and other information provided by other Federal agencies and sources. The NRC also ensures that licensees meet appropriate security-level requirements through the ongoing regulatory process (routine inspections) as a current and generic regulatory issue that affects all nuclear power plants. The issue of security and risk from terrorist acts against nuclear power plants is not unique to facilities that have requested a renewal to their licenses (NRC 2006).

The Commission has determined that there is no need for a special review of emergency planning issues in the context of an environmental review for license renewal (NUREG-1850). Therefore, decisions and recommendations concerning emergency preparedness at nuclear plants are ongoing and outside the regulatory scope of license renewal.

1.7.4 Safeguards and Security

The NRC requires that nuclear power plants be both safe and secure. Safety refers to operating the plant in a manner that protects the public and the environment. Security refers to protecting the plant (i.e., using people, equipment, and fortifications) from intruders who wish to damage or destroy it in order to harm people and the environment.

Security issues such as safeguards planning are not tied to a license renewal action but are considered to be issues that need to be dealt with constantly as a part of the current (and renewed) operating license. Security issues are periodically reviewed and updated at every operating plant. These reviews continue throughout the period of an operating license, whether the original or renewed license. If issues related to security are discovered at a nuclear plant, they are addressed immediately, and any necessary changes are reviewed and incorporated under the operating license (NRC 2006). As such, decisions and recommendations concerning safeguards and security at nuclear power plants are ongoing and outside the regulatory scope of this GEIS.

1.7.5 Need for Power

The NRC will not make a decision or any recommendations on the basis of information presented in this GEIS regarding the need for power at nuclear power plants. The regulatory authority over licensee economics (including the need for power) falls within the jurisdiction of the states and to some extent within the jurisdiction of FERC. The proposed rule for license renewal had originally included a cost-benefit analysis and consideration of licensee economics

as part of the NEPA review. However, during the comment period, State, Federal, and licensee representatives expressed concern about the use of economic costs and cost-benefit balancing in the proposed rule and the 1996 GEIS. They noted that CEQ regulations interpret NEPA to require only an assessment of the cumulative effects of a proposed Federal action on the natural and man-made environment and that the determination of the need for generating capacity has always been a State responsibility. For this reason, the purpose and need for the proposed action (i.e., license renewal) was defined in the GEIS as follows (NRC 2006):

> The purpose and need for the proposed action (renewal of an operating license) is to provide an option that allows for power generation capability beyond the term of a current nuclear power plant operating license to meet future system generating needs, as such needs may be determined by State, licensee, and, where authorized, Federal (other than NRC) decision-makers.

10 CFR 51.95(c)(2) states that:

> The supplemental environmental impact statement (SEIS) for license renewal is not required to include discussion of need for power or the economic costs and economic benefits of the proposed action or of alternatives to the proposed action except insofar as such benefits and costs are either essential for a determination regarding the inclusion of an alternative in the range of alternatives considered or relevant to mitigation.

1.8 Implementation of the Rule (10 CFR Part 51)

1.8.1 General Requirements

The regulatory requirements for performing a NEPA review for a license renewal application are similar to the NEPA review requirements for other major plant licensing actions. Consistent with the current NEPA practice for major plant licensing actions, an applicant is required to submit an environmental report that analyzes the environmental impacts associated with the proposed action, considers alternatives to the proposed action, and evaluates any alternatives for reducing adverse environmental effects. For license renewal, the NRC prepares a SEIS for public comment, and issues a final SEIS after considering public comments on the draft.

1.8.2 Applicant's Environmental Report

The applicant's environmental report must contain an analysis of the environmental impacts of renewing a license, the environmental impacts of alternatives, and mitigation alternatives. In preparing the analysis of environmental impacts contained in the environmental report, the applicant should refer to the data provided in 10 CFR Part 51, Appendix B. The applicant is not

required to provide an analysis in the environmental report of those issues identified as Category 1 issues in Table B-1 in Appendix B unless the applicant is aware of new and significant information. For those issues identified as Category 2 in Table B-1, the applicant must provide a plant-specific analysis. Section 10 CFR 51.53(c)(3)(ii) specifies the subject areas of the analysis that must be addressed for the Category 2 issues.

10 CFR 51.45(c) and 10 CFR 51.53(c)(2) require the applicant to consider alternatives available for reducing or avoiding adverse environmental effects associated with the proposed action. This consideration is limited to designated Category 2 issues. Pursuant to 10 CFR 51.45(d), the environmental report must include a discussion of the status of compliance with applicable Federal, State, and local environmental standards. Also, 10 CFR 51.53(c)(2) specifically excludes from consideration in the environmental report the issues of need for power, the economic costs and benefits of the proposed action, economic costs and benefits of alternatives to the proposed action, or other issues not related to environmental effects of the proposed action and associated alternatives. NRC regulations do not require a discussion of the economic costs and benefits of these alternatives in the environmental report for the operating license renewal stage, except as necessary to determine whether an alternative should be included in the range of alternatives considered or whether certain mitigative actions are appropriate. The analysis should also demonstrate consideration of a reasonable set of alternatives to license renewal. In preparing the alternatives analysis, the applicant is not limited to the technologies presented in this GEIS. Information provided in the applicant's environmental report will be used in preparing the SEIS.

1.8.3 NRC's SEIS

As required by 10 CFR 51.20(b)(2), the NRC is required to prepare an SEIS. The SEIS will serve as the NRC's analysis of the environmental impacts of license renewal as well as a comparison of these impacts to the environmental impacts of alternatives. This document will also present the NRC's preliminary recommendation. SEISs for license renewal do not need to include a discussion of the need for power or the economic costs and economic benefits of the proposed action or of alternatives to the proposed action (10 CFR 51.95(c)(2).

1.8.4 Public Scoping and Public Comments on NRC's Draft SEIS

NRC conducts public scoping meetings in order to inform the public about the license renewal process and receive comments. At the conclusion of the scoping period, NRC reviews and addresses public comments in a scoping summary report. In addition, the draft SEIS is issued for public comment (see 10 CFR 51.73). In both the scoping and the public comment process, the NRC will consider comments and will determine whether these comments provide any information that is new and significant compared with that previously considered in the GEIS. If

the comments are determined to provide new and significant information that could change the conclusions in the GEIS, these comments will be considered and addressed in the SEIS.

1.8.5 NRC's Analysis and Preliminary Recommendation

The NRC's draft SEIS will include its analysis of the environmental impacts of the proposed license renewal action and the environmental impacts of the alternatives to the proposed action. The NRC will utilize and integrate (1) the environmental impacts of license renewal as provided in Table B-1 of 10 CFR Part 51, Appendix B, (2) the appropriate plant-specific analyses of Category 2 issues, and (3) any new and significant information identified in the applicant's environmental report during the scoping and public comment process to arrive at a conclusion regarding the environmental impacts of license renewal. These impacts will then be compared with the environmental impacts of the alternatives presented in the SEIS.

1.8.6 NRC's Final SEIS

The NRC will issue a final SEIS in accordance with 10 CFR 51.91 and 51.93 after considering (1) the public comments, (2) the analysis of Category 2 issues, and (3) any new and significant information involving Category 1 issues. The NRC will provide a record of its decision regarding the environmental impacts of the proposed action (see 10 CFR 51.102 and 51.103). All comments on the draft SEIS will be addressed by the NRC in the final SEIS in accordance with 40 CFR 1503.2. Comments will be addressed in following manner:

(a) NRC's response to a comment regarding the applicability of the analysis of an impact codified in the rule to the plant in question may be a statement and explanation of its view that the analysis is adequate including, if applicable, consideration of the significance of new information. A commenter dissatisfied with such a response may file a petition for rulemaking under 10 CFR 2.802. Procedures for the submission of petitions for rulemaking are explained in 10 CFR Part 2. If the commenter is successful in persuading the Commission that the new information does indicate that the analysis of an impact codified in the rule is incorrect in significant respects (either in general or with respect to the particular plant), then a rulemaking proceeding will be initiated.

(b) If the commenter provides new information that is relevant to the plant and is also relevant to other plants (i.e., generic information) and that information demonstrates that the analysis of an impact codified in the final rule is incorrect, the NRC staff will seek Commission approval either to suspend the application of the rule on a generic basis with respect to the analysis or to delay granting the renewal application (and possibly other renewal applications) until the rule can be amended. The revised GEIS would reflect the corrected analysis and any additional consideration of alternatives as appropriate.

(c) If a commenter provides new, site-specific information that demonstrates that the analysis of an impact codified in the rule is incorrect with respect to the particular plant, then the NRC staff will seek Commission approval to waive the application of the rule with respect that analysis in that specific renewal proceeding. The SEIS would reflect the corrected analysis as appropriate.

1.9 Public Comment Process for the GEIS

The public comment process for the GEIS is similar to that used for SEISs and other NRC NEPA documents. Public review and comments on the draft GEIS revision will begin with publication of the EPA's Notice of Filing of the draft GEIS. During the ensuing 75-day public comment period, public meetings will be held in each of the four NRC regions. At these meetings, the NRC staff will describe the preliminary results of the GEIS environmental review and answer questions related to the review and provide members of the public with information to help them formulate their comments. The NRC will use public comments gathered during the meetings and comment period when developing the final GEIS. NRC responses to comments will be included in the final GEIS.

1.10 Lessons Learned

The NRC staff assessed 92 environmental issues in the original GEIS. Lessons learned and knowledge gained during previous license renewal reviews provides a significant source of new information for this assessment. Over 30 nuclear plants have undergone license renewal and environmental review. The purpose of the evaluation was to determine if the findings presented in the 1996 GEIS remain valid. In doing so, the NRC staff considered the need to modify, add to, or delete any of the 92 issues in the 1996 GEIS. After this evaluation, the staff carried forward 78 impact issues for detailed consideration in this GEIS revision. The issues identified in the 1996 GEIS have served to accurately categorize most environmental impacts associated with license renewal, and there have been no cases where new and significant information called into question the original findings of the GEIS. There have been a number of instances where new (but not significant) information was uncovered during a license renewal review. In most cases, the new information identified was information that did not fit into one of the environmental issues covered in the 1996 GEIS but still warranted review in the plant-specific SEIS. For example, the environmental review for license renewal at the D.C. Cook plant in Michigan considered the effects of sanitary sewage lagoons on groundwater quality as a new issue. The review for the Oyster Creek plant considered the effects of a small dam built to impound water for fire-fighting purposes. Neither of these topics fit into the 1996 GEIS issues. The license renewal evaluation process established in 10 CFR Part 51 has proven to be robust

because it allows new information and lessons learned to be addressed in subsequent license renewal environmental reviews.

1.11 New Organization of the GEIS

This GEIS revision adopts the NRC's standard format for EISs as established in 10 CFR 51, Subpart A, Appendix A. Consequently, the organizational structure of this GEIS revision is quite different from that of the 1996 GEIS. The 1996 GEIS presented impacts organized around plant systems (e.g., cooling systems, transmission lines) and activities (e.g., refurbishment). This GEIS revision takes a more typical NEPA resource-based approach to presenting impacts where all components of the proposed action and alternatives are presented for each resource area. The following list describes the contents of each chapter of the GEIS revision:

- **Chapter 2** presents brief descriptions of the activities (including operations, refurbishment, accidents, and decommissioning) and impacts associated with the proposed action and alternatives.

- **Chapter 3** presents descriptions of the affected environment in the vicinity of operating commercial nuclear plants in the United States. Included are descriptions of nuclear power plant operations and facilities and descriptions of existing conditions in the following topical areas: (1) land use and visual resources; (2) meteorology, air quality, and noise; (3) geology, seismology, and soils; (4) hydrology (surface water and groundwater); (5) ecology (terrestrial ecology, aquatic ecology, threatened, endangered, and protected species and essential fish habitat); (6) historic and cultural resources; (7) socioeconomics; (8) human health (radiological and nonradiological hazards); (9) environmental justice; and (10) waste management and pollution prevention.

- **Chapter 4** presents the environmental consequences and mitigating actions associated with the proposed action and alternatives (including operations, construction and refurbishment, accidents, fuel cycles, and decommissioning) in each of the topical areas presented in Chapter 3. Cumulative impacts and resource commitments associated with the proposed action are also discussed.

- **Chapter 5** presents a list of the preparers of the GEIS revision, their affiliations, authorship responsibilities, and qualifications.

- **Chapter 6** provides a list of the agencies, organizations, and persons receiving copies of the GEIS.

- **Chapter 7** provides for a glossary of terms used in the GEIS.

1.12 References

10 CFR Part 2. *Code of Federal Regulations*, Title 10, *Energy*, Part 2, "Rules of Practice for Domestic Licensing Proceedings and Issuance of Orders."

10 CFR Part 50. *Code of Federal Regulations*, Title 10, *Energy*, Part 50, "Domestic Licensing of Production and Utilization Facilities."

10 CFR Part 51. *Code of Federal Regulations*, Title 10, *Energy*, Part 51, "Environmental Protection Regulations for Domestic Licensing and Related Regulatory Functions."

10 CFR Part 54. *Code of Federal Regulations*, Title 10, *Energy*, Part 54, "Requirements for Renewal of Operating Licenses for Nuclear Power Plants."

40 CFR Part 1502. *Code of Federal Regulations*, Title 40, *Protection of Environment*, Part 1502, "Environmental Impact Statement."

40 CFR Part 1503. *Code of Federal Regulations*, Title 40, *Protection of Environment*, Part 1503, "Commenting."

40 CFR Part 1508. *Code of Federal Regulations*, Title 40, *Protection of Environment*, Part 1508, "Terminology and Index."

44 CFR Appendix A to Part 353. *Code of Federal Regulations*, Title 44, Appendix A to Part 353, "Memorandum of Understanding Between Federal Emergency Management Agency and Nuclear Regulatory Commission."

National Environmental Policy Act of 1969 (NEPA). 42 USC 4321 et seq.

U.S. Nuclear Regulatory Commission (NRC). 1996. *Generic Environmental Impact Statement for License Renewal of Nuclear Plants*. NUREG-1437, Vols. 1 and 2, Washington, D.C.

U.S. Nuclear Regulatory Commission (NRC). 1999. "Section 6.3 – Transportation, Table 9.1, Summary of Findings on NEPA Issues for License Renewal of Nuclear Power Plants, Final Report." *Generic Environmental Impact Statement for License Renewal of Nuclear Plants Main Report*. NUREG-1437, Vol. 1, Addendum 1, Washington, D.C.

U.S. Nuclear Regulatory Commission (NRC). 2006. *Frequently Asked Questions on License Renewal of Nuclear Power Reactors*. NUREG-1850. Washington, D.C. (March 2006).

2 Alternatives Including the Proposed Action

The proposed action considered in this generic environmental impact statement (GEIS) is the renewal of commercial nuclear power plant operating licenses. Although the U.S. Nuclear Regulatory Commission's (NRC's) decision-making authority is limited to deciding whether to renew a nuclear power plant's operating license, the NRC's implementation of the National Environmental Policy Act (NEPA) requires the NRC to consider the environmental impacts of potential alternatives to renewing a plant's operating license. In plant-specific environmental reviews, the NRC compares the impacts of renewing the operating license and the impacts from continued plant operations to the environmental impacts of alternatives. This process allows the NRC to determine whether the environmental impacts of license renewal are so great that preserving the option of license renewal for energy-planning decision makers would be unreasonable. If the NRC decides not to renew the operating license of a nuclear plant, then energy decision makers will have to find alternative means to address their energy needs. Alternatives to license renewal include other means of generating electricity, as well as offsetting demand using conservation and energy efficiency measures (demand-side management) or purchasing sufficient power to replace the capacity supplied by the existing nuclear power plant.

Contents of Chapter 2

- Proposed Action (Section 2.1)
- No-Action Alternative (Section 2.2)
- Alternative Energy Sources (Section 2.3)
- Comparison of Alternatives (Section 2.4)

If the NRC renews the operating license, the decision on whether or not to continue nuclear plant operations will be made by the licensee and State or other Federal (non-NRC) decision makers. This decision would be based on economics, increased energy efficiency production and use, conservation, reliable generation and distribution of electric power, improved fuel diversity, and environmental objectives.

Alternatives to the Proposed Action Considered in the GEIS

- Not renewing the operating licenses of commercial nuclear power plants (no-action alternative).
- Replacing existing nuclear generating capacity using other energy sources (including fossil fuel, new nuclear, and renewable energy).
- Offsetting generation capacity using conservation and energy efficiency (demand-side management) or purchased power.

A full range of power generation alternatives are evaluated in the GEIS, including fossil fuel, new nuclear, and renewable energy sources. Conservation and energy efficiency, as well as power purchasing, are also considered as alternatives to license renewal. Section 2.1 describes the proposed action, including continued

operations that would occur during the license renewal term, refurbishment, and activities that are similar to those that occurred during the current license term. Termination of nuclear power plant operations would occur at or before the end of the license renewal term. Decommissioning activities would commence after operations have ceased. This impact summary identifies each of the 78 impact issues, their significance (small, moderate, or large, as defined in Section 1.5), and whether the impact designation would apply to all plants. Section 2.2 describes the no-action alternative (not renewing the operating license), and Section 2.3 presents alternatives to replace existing nuclear power capacity, including fossil fuel, new nuclear, renewable energy, conservation and energy efficiency, and purchased power. Section 2.4 presents a summary comparison of the impacts of the proposed action and the alternatives.

2.1 Proposed Action

As stated in Section 1.2, the proposed action is the renewal of commercial nuclear power plant operating licenses. For NRC to determine whether the license should be renewed, an applicant is required to perform certain analyses to demonstrate that the plant could continue safe operations beyond its current licensing period. These analyses include an assessment of the effects of potential age-related degradation on certain long-lived, passive systems, structures, and components. This requires applicants to describe the conditions under which the plant would operate during the license renewal term. A summary of these conditions under normal operations is provided in Section 2.1.1.

Applicants for license renewal may perform certain refurbishment activities (replacement of major components and systems) to continue operating beyond the current license term. These activities are discussed in Section 2.1.2, and impacts are described in Chapter 4. Section 2.1.3 provides an overview of the termination of nuclear power plant operations and decommissioning process and site use options after decommissioning. The impacts associated with termination of operations and decommissioning of nuclear and energy alternative power plants are presented in Section 4.11.2.

2.1.1 Plant Operations During the License Renewal Term

This section describes plant operations, routine maintenance, and refueling operations during the license renewal term. It also provides an overview of the aging management reviews required for license renewal applications. During the license renewal term, commercial nuclear power plants would continue to operate in the same manner as they had during the original license term. All nuclear reactors currently operating in the United States are light water reactors, of which there are two basic types – pressurized water reactors and boiling water

reactors. A brief description of these reactors and the baseline conditions during their operation are presented in Chapter 3.

The types of activities that are conducted at nuclear power plants can be classified as:

- Reactor operations (includes all work related to running the reactor, usually conducted from the control room);
- Waste management (processing, storage, packaging, and offsite shipment of wastes);
- Security (includes site security personnel);
- Office and clerical work (management, public relations, and support staff);
- Laboratory analysis;
- Surveillance, monitoring, and maintenance (personnel involved in equipment testing, inspections, and monitoring activities); and
- Refueling and other outages (usually involves additional workers brought on site during the outage)

These activities are expected to continue during the license renewal term. Certain systems, structures, and components such as the reactor pressure vessel, reactor containment building, and piping are expected to operate into the license renewal term. Title 10, Part 54, of the *Code of Federal Regulations* (10 CFR Part 54) places certain requirements on the licensees to make sure that such systems, structures, and components continue to operate safely. In the 1996 GEIS, the incremental aging management activities implemented to allow operation of a nuclear power plant beyond the original 40-year license term were assumed to fall under one of two broad categories: (1) surveillance, monitoring, inspection, testing, trending, and recordkeeping actions, most of which are repeated at regular intervals, and (2) major refurbishment actions, which usually occur infrequently and possibly only once in the life of the plant for any given item. Refurbishment activities are discussed in the following section.

The NRC finds that the approaches to environmental impacts from refurbishment activities contained in the 1996 GEIS are valid and conservative. The approaches yield environmental impacts that are likely greater than – or at least equal to – the actual impacts during the license renewal term.

2.1.2 Refurbishment and Other Activities Associated with License Renewal

In the 1996 GEIS, the NRC assumed that licensees would need to conduct major refurbishment activities to ensure the safe and economic operation of nuclear plants beyond the current license term. Activities included replacement and repair of major components and systems, upgrades, and equipment. Replacement of many systems, structures, and components included steam generators and pressurizers for PWRs and recirculation piping systems for BWRs. It was assumed that many plants would also undertake construction projects to replace or improve infrastructure. Such projects could include construction of new parking lots, roads, storage buildings, structures, and other facilities.

The number of systems, structures, and components involved in refurbishment and the frequency and duration of each activity could vary. Many refurbishment activities have already taken place (e.g., steam generator and vessel head replacement). These activities were conducted during refueling or maintenance outages. Most nuclear plants have not identified any refurbishment activities associated with license renewal. Impacts from refurbishment activities outside of license renewal are assumed to have been accounted for in annual site evaluation reports, environmental operating reports, and radiological environmental monitoring program reports. Detailed analyses have not been performed for refurbishment actions in this GEIS revision. Instead, the impacts of typical activities during the license renewal term, including any refurbishment activities, are addressed for each resource area in Chapter 4.

2.1.3 Termination of Nuclear Power Plant Operations and Decommissioning After the License Renewal Term

The impacts of decommissioning are described in the *Generic Environmental Impact Statement on Decommissioning of Nuclear Facilities: Regarding the Decommissioning of Nuclear Power Reactors*, NUREG-0586 (NRC 2002a). The majority of the activities associated with plant operations would cease with reactor shutdown, although some activities would remain unchanged, while others would continue at reduced or altered levels. Systems dedicated to reactor operations would cease; however, impacts from their physical presence may continue if not removed after reactor shutdown. For sites with more than one unit, systems that continue to operate could be reduced in proportion to the decreased demand on those systems. Impacts associated with dedicated systems that remain in place or shared systems that continue to operate would remain unchanged.

Termination of nuclear power plant operations would result in the cessation of activities necessary to maintain the reactor, as well as a significant reduction in plant workforce. It is assumed that the termination of operations would not immediately lead to the dismantlement of the reactor or other infrastructure. For sites with just one unit, some facilities could remain in operation to ensure the site is maintained in safe shutdown condition.

The NRC has developed regulations and guidance for the decommissioning of nuclear facilities, including nuclear power plants. These regulations are found in Subpart E to 10 CFR Part 20 and the guidance document *Consolidated NMSS Decommissioning Guidance*, NUREG-1757 (NRC 2002b).

The decommissioning process for a nuclear power plant begins with the licensee informing the NRC that it intends to decommission the plant. The licensee then prepares a decommissioning plan and submits it to the NRC. If the plan is acceptable, the NRC then conducts a detailed technical review and evaluates the plan from safety and environmental perspectives. As part of the safety evaluation, the NRC prepares a safety evaluation report (SER) to document the methods used in the evaluation and the conclusions reached. For environmental evaluation, the NRC prepares an environment impact statement or an environmental assessment, depending on the scope of the proposed work. At the end of the detailed technical review, the NRC determines whether to approve the decommissioning plan. Upon approval, the NRC amends the existing license of the plant to allow decommissioning to proceed. Once the decommissioning plan is approved and the license amendment is issued, the licensee implements the plan. The NRC conducts inspections to verify compliance with the plan.

At the completion of decommissioning, the licensee conducts a final status survey to demonstrate compliance with criteria established in the decommissioning plan. The NRC verifies the survey by one or more of the following: a quality assurance/quality control review, side-by-side or split sampling, and independent confirmatory surveys. When the NRC confirms that the criteria in the decommissioning plan for releasing the site have been met, the NRC either terminates or amends the license, depending on the intended use of the site.

At the end of the decommissioning process, the site of a nuclear power plant and any remaining structures on the site can be released for unrestricted or restricted use. The radiological criteria for releasing sites for unrestricted use are given in 10 CFR 20.1402. The criteria for restricted conditions and alternate criteria that the NRC may approve under certain conditions are listed in 10 CFR 20.1403 and 10 CFR 20.1404, respectively.

2.1.4 Impacts of the Proposed Action

In evaluating the impacts of the proposed action, 78 impact issues were identified: 70 impact issues were associated with continued operations and refurbishment; 2 with postulated accidents; 1 with the termination of nuclear power plant operations and decommissioning; 4 with the uranium fuel cycle; and 1 with cumulative impacts. For all of these issues, the incremental effect of license renewal relative to the no-action alternative was the focus of the evaluation. Significance levels and impact categories are defined in Section 1.5.

A summary of the environmental impacts of the proposed action are presented in Table 2.1–1.

Table 2.1–1. Summary of Impacts Associated with License Renewal Under the Proposed Action

Issue	Impact
Land Use	
Onsite land use	**Small impact (Category 1).** Changes in onsite land use from continued operations and refurbishment associated with the license renewal term would be a small fraction of any nuclear power plant site and would involve only land that is controlled by the licensee.
Offsite land use	**Small impact (Category 1).** Offsite land use would not be affected from continued operations and refurbishment associated with the license renewal term.
Offsite land use in transmission line rights-of-way (ROWs)	**Small impact (Category 1).** Use of transmission line ROWs from continued operations and refurbishment associated with the license renewal term would continue with no change in land use restrictions.
Visual Resources	
Aesthetic impacts	**Small impact (Category 1).** No important changes to the visual appearance of plant structures or transmission lines are expected from continued operations and refurbishment associated with the license renewal term.
Air Quality	
Air Quality (non-attainment and maintenance areas)	**Small, moderate, or large impact (Category 2).** Air quality impacts of continued operations and refurbishment activities associated with the license renewal term are expected to be small. However, emissions during these activities could be a cause for concern at locations in or near air quality nonattainment or maintenance areas. The significance of the impact cannot be determined without considering the compliance status of each site and the activities that could occur. These impacts would be short-lived and cease after projects were completed. Emissions from testing emergency diesel generators and fire pumps and from routine operations of boilers used for space heating would not be a concern, even for those plants located in or adjacent to nonattainment areas. Although particulate emissions from cooling towers may be a concern for a very limited number of plants located in States that regulate such emissions, the impacts in even these worst-case situations have been small.
Air quality effects of transmission lines	**Small impact (Category 1).** Production of ozone and oxides of nitrogen is insignificant and does not contribute measurably to ambient levels of these gases.

Table 2.1–1. (cont.)

Issue	Impact
Noise	
Noise impacts	**Small impact (Category 1).** Noise levels would remain below regulatory guidelines for offsite receptors during continued operations and refurbishment associated with the license renewal term.
Geology and Soils	
Impacts of nuclear plants on geology and soils	**Small impact (Category 1).** Impacts on geology and soils would be small at all nuclear plants if best management practices were employed to reduce erosion associated with continued operations and refurbishment.
Surface Water	
Surface-water use and quality	**Small impact (Category 1).** Impacts are expected to be negligible if best management practices are employed to control soil erosion and spills. Water use associated with continued operation and refurbishment projects for license renewal would not increase significantly or would be reduced if a plant outage is necessary to accomplish the action.
Altered current patterns at intake and discharge structures	**Small impact (Category 1).** Altered current patterns would be limited to the area in the vicinity of the intake and discharge structures. These impacts have been small at operating nuclear power plants.
Altered salinity gradients	**Small impact (Category 1).** Effects on salinity gradients would be limited to the area in the vicinity of the intake and discharge structures. These impacts have been small at operating nuclear power plants.
Altered thermal stratification of lakes	**Small impact (Category 1).** Effects on thermal stratification would be limited to the area in the vicinity of the intake and discharge structures. These impacts have been small at operating nuclear power plants.
Scouring caused by discharged cooling water	**Small impact (Category 1).** Scouring effects would be limited to the area in the vicinity of the intake and discharge structures. These impacts have been small at operating nuclear power plants.
Discharge of metals in cooling system effluent	**Small impact (Category 1).** Discharges of metals have not been found to be a problem at operating nuclear power plants with cooling-tower-based heat dissipation systems and have been satisfactorily mitigated at other plants. Discharges are monitored as part of the National Pollutant Discharge Elimination System (NPDES) permit process.

Table 2.1–1. (cont.)

Issue	Impact
Surface Water (cont.)	
Discharge of biocides, sanitary wastes, and minor chemical spills	**Small impact (Category 1).** The effects of these discharges are regulated by State and Federal environmental agencies. Discharges are monitored as part of the NPDES permit process. These impacts have been small at operating nuclear power plants.
Water use conflicts (plants with once-through cooling systems)	**Small impact (Category 1).** These conflicts have not been found to be a problem at operating nuclear power plants with once-through heat dissipation systems.
Water use conflicts (plants with cooling ponds or cooling towers using makeup water from a river with low flow)	**Small or moderate impact (Category 2).** Impacts could be of small or moderate significance, depending on makeup water requirements, water availability, and competing water demands.
Effects of dredging on water quality	**Small impact (Category 1).** Dredging to remove accumulated sediments in the vicinity of intake and discharge structures and to maintain barge shipping has not been found to be a problem for surface water quality. Dredging is performed under permit from the U.S. Army Corps of Engineers.
Temperature effects on sediment transport capacity	**Small impact (Category 1).** These effects have not been found to be a problem at operating nuclear power plants and are not expected to be a problem during the license renewal term.
Groundwater	
Groundwater use and quality	**Small impact (Category 1).** Extensive dewatering is not anticipated from continued operations and refurbishment activities associated with the license renewal term. The application of best management practices for handling any materials produced or used during activities would reduce impacts.
Groundwater use conflicts (plants that withdraw less than 100 gallons per minute [gpm])	**Small impact (Category 1).** Plants that withdraw less than 100 gpm are not expected to cause any groundwater use conflicts.
Groundwater use conflicts (plants that withdraw more than 100 gpm including those using Ranney wells)	**Small, moderate, or large impact (Category 2).** Plants that withdraw more than 100 gpm could cause groundwater use conflicts with nearby groundwater users.
Groundwater use conflicts (plants with closed-cycle cooling systems that withdraw makeup water from a river)	**Small, moderate, or large impact (Category 2).** Water use conflicts could result from water withdrawals from rivers during low-flow conditions, which may affect aquifer recharge. The significance of impacts would depend on makeup water requirements, water availability, and competing water demands.
Groundwater quality degradation resulting from water withdrawals	**Small impact (Category 1).** Groundwater withdrawals at operating nuclear power plants would not contribute significantly to groundwater quality degradation.

Table 2.1–1. (cont.)

Issue	Impact
Groundwater (cont.)	
Groundwater quality degradation (plants with cooling ponds in salt marshes)	**Small impact (Category 1).** Sites with closed-cycle cooling ponds could degrade groundwater quality; however, because groundwater in salt marshes is brackish, this is not a concern for plants located in salt marshes.
Groundwater quality degradation (plants with cooling ponds at inland sites)	**Small, moderate, or large impact (Category 2).** Sites with closed-cycle cooling ponds could degrade groundwater quality. For plants located inland, the quality of the groundwater in the vicinity of the ponds could be affected. The significance of the impact would depend on cooling pond water quality, site hydrogeologic conditions (including the interaction of surface water and groundwater), and the location, depth, and pump rate of water wells.
Groundwater and soil contamination	**Small or moderate impact (Category 2).** Industrial practices involving the use of solvents, hydrocarbons, heavy metals, or other chemicals and unlined wastewater lagoons have the potential to contaminate site groundwater, soil, and subsoil. Contamination is subject to State- and U.S. Environmental Protection Agency (EPA)-regulated cleanup and monitoring programs.
Radionuclides released to groundwater	**Small or moderate impact (Category 2).** Underground system leaks of process water have been discovered in recent years at several plants. Groundwater protection programs have been established at all operating nuclear power plants.
Terrestrial Resources	
Impacts of continued plant operations on terrestrial ecosystems	**Small, moderate, or large impact (Category 2).** Continued operations, refurbishment, and maintenance activities are expected to keep terrestrial communities in their current condition. Application of best management practices would reduce the potential for impacts. The magnitude of impacts would depend on the nature of the activity, the status of the resources that could be affected, and the effectiveness of mitigation.
Exposure of terrestrial organisms to radionuclides	**Small impact (Category 1).** Doses to terrestrial organisms are expected to be well below exposure guidelines developed to protect these organisms.
Cooling system impacts on terrestrial resources (plants with once-through cooling systems or cooling ponds)	**Small impact (Category 1).** No adverse effects to terrestrial plants or animals have been reported as a result of increased water temperatures, fogging, humidity, or reduced habitat quality. Due to the low concentrations of contaminants in cooling system effluents, uptake and accumulation of contaminants in the tissues of wildlife exposed to the contaminated water or aquatic food sources are not expected to be significant issues.

Table 2.1–1. (cont.)

Issue	Impact
Terrestrial Resources (cont.)	
Cooling tower impacts on vegetation (plants with cooling towers)	**Small impact (Category 1).** Impacts from salt drift, icing, fogging, or increased humidity associated with cooling tower operation have the potential to affect adjacent vegetation, but these impacts have been small at operating nuclear power plants and are not expected to change over the license renewal term.
Bird collisions with cooling towers and transmission lines	**Small impact (Category 1).** Bird collisions with cooling towers and transmission lines occur at rates that are unlikely to affect local or migratory populations.
Water use conflicts with terrestrial resources (plants with cooling ponds or cooling towers using make-up water from a river with low flow)	**Small or moderate impact (Category 2).** Impacts on terrestrial resources in riparian communities affected by water use conflicts could be of moderate significance in some situations.
Transmission line ROW management impacts on terrestrial resources	**Small impact (Category 1).** Continued ROW management during the license renewal term is expected to keep terrestrial communities in their current condition. Application of best management practices would reduce the potential for impacts.
Electromagnetic field effects on flora and fauna (e.g., plants, agricultural crops, honeybees, wildlife, livestock)	**Small impact (Category 1).** No significant impacts of electromagnetic fields on terrestrial flora and fauna have been identified. Such effects are not expected to be a problem during the license renewal term.
Aquatic Resources	
Impingement and entrainment of aquatic organisms (plants with once-through cooling systems or cooling ponds)	**Small, moderate, or large impact (Category 2).** The impacts of impingement and entrainment are small at many plants but may be moderate or even large at a few plants with once-through and cooling-pond cooling systems, depending on cooling system withdrawal rates and volumes and the aquatic resources at the site.
Impingement and entrainment of aquatic organisms (plants with cooling towers)	**Small impact (Category 1).** Impingement and entrainment rates are lower at plants that use closed-cycle cooling with cooling towers because the rates and volumes of water withdrawal needed for makeup are minimized.
Thermal impacts on aquatic organisms (plants with once-through cooling systems or cooling ponds)	**Small, moderate, or large impact (Category 2).** Most of the effects associated with thermal discharges are localized and are not expected to affect overall stability of populations or resources. The magnitude of impacts, however, would depend on site-specific thermal plume characteristics and the nature of aquatic resources in the area.
Thermal impacts on aquatic organisms (plants with cooling towers)	**Small impact (Category 1).** Thermal effects associated with plants that use cooling towers are small because of the reduced amount of heated discharge.

Table 2.1–1. (cont.)

Issue	Impact
Aquatic Resources (cont.)	
Effects of cooling water discharge on dissolved oxygen, gas supersaturation, and eutrophication	**Small impact (Category 1).** Gas supersaturation was a concern at a small number of operating nuclear power plants with once-through cooling systems but has been satisfactorily mitigated. Low dissolved oxygen was a concern at one nuclear power plant with a once-through cooling system but has been effectively mitigated. Eutrophication (nutrient loading) and resulting effects on chemical and biological oxygen demands have not been found to be a problem at operating nuclear power plants.
Effects of non-radiological contaminants on aquatic organisms	**Small impact (Category 1).** Best management practices and discharge limitations of NPDES permits are expected to minimize the potential for impacts to aquatic resources. Accumulation of metal contaminants has been a concern at a few nuclear power plants but has been satisfactorily mitigated by replacing copper alloy condenser tubes with those of another metal.
Exposure of aquatic organisms to radionuclides	**Small impact (Category 1).** Doses to aquatic organisms are expected to be well below exposure guidelines developed to protect these aquatic organisms.
Effects of dredging on aquatic organisms	**Small impact (Category 1).** Effects of dredging on aquatic resources tend to be of short duration (years or less) and localized. Dredging requires permits from the U.S. Army Corps of Engineers, State environmental agencies, and other regulatory agencies.
Water use conflicts with aquatic resources (plants with cooling ponds or cooling towers using make-up water from a river with low flow)	**Small or moderate impact (Category 2).** Impacts on aquatic resources in instream communities affected by water use conflicts could be of moderate significance in some situations.
Refurbishment impacts on aquatic resources	**Small impact (Category 1).** Refurbishment impacts with appropriate mitigation are not expected to change aquatic communities from their current condition.
Impacts of transmission line ROW management on aquatic resources	**Small impact (Category 1).** Application of best management practices to ROW near aquatic systems would reduce the potential for impacts.
Losses from predation, parasitism, and disease among organisms exposed to sublethal stresses	**Small impact (Category 1).** These types of losses have not been found to be a problem at operating nuclear power plants and are not expected to be a problem during the license renewal term.
Stimulation of aquatic nuisance species (e.g., shipworms)	**Small impact (Category 1).** Stimulation of nuisance organisms has been satisfactorily mitigated at the single nuclear power plant with a once-through cooling system where previously it was a problem. It has not been found to be a problem at operating nuclear power plants with cooling towers or cooling ponds and is not expected to be a problem during the license renewal term.

Table 2.1–1. (cont.)

Issue	Impact
Threatened, Endangered, and Protected Species and Essential Fish Habitat	
Threatened, endangered, and protected species and essential fish habitat	**Small, moderate, or large impact (Category 2).** The magnitude of impacts on threatened, endangered, and protected species and essential fish habitat would depend on the occurrence of listed species and habitats and the effects of power plant systems on them. Consultation with appropriate agencies would be needed to determine whether special status species or habitats are present and whether they would be adversely affected by activities associated with license renewal.
Historic and Cultural Resources	
Historic and cultural resources	**Small, moderate, or large impact (Category 2).** Continued operations and refurbishment associated with the license renewal term are expected to have no more than small impacts on historic and cultural resources located onsite and in the transmission line ROW because most impacts could be mitigated by avoiding those resources. The National Historic Preservation Act (NHPA) requires the Federal agency to consult with the State Historic Preservation Officer (SHPO) and appropriate Native American Tribes to determine the potential impacts and mitigation. See § 51.14(a).
Socioeconomics	
Employment and income, recreation and tourism	**Small impact (Category 1).** Although most nuclear plants have large numbers of employees with higher than average wages and salaries, employment and income impacts from continued operations and refurbishment are expected to be small. Nuclear plant operations, employee spending, power plant expenditures, and tax payments have an effect on local economies. Changes in plant operations, employment, and expenditures would have a greater effect on rural economies than on semi-urban economies.
Tax revenues	**Small impact (Category 1).** Nuclear plants provide tax revenue to local jurisdictions in the form of property tax payments, payments in lieu of tax (PILOT), or tax payments on energy production. The amount of tax revenue paid during the license renewal term from continued operations and refurbishment is not expected to change, since the assessed value of the power plant, payments on energy production and PILOT payments are also not expected to change.

Table 2.1–1. (cont.)

Issue	Impact
Socioeconomics (cont.**)**	
Community services and education	**Small impact (Category 1).** Changes to local community and educational services would be small from continued operations and refurbishment associated with the license renewal term. With no increase in employment, value of the power plant, payments on energy production, and PILOT payments expected during the license renewal term, community and educational services would not be affected by continued power plant operations. Changes in employment and tax payments would have a greater effect on jurisdictions receiving a large portion of annual revenues from the power plant than on jurisdictions receiving the majority of their revenues from other sources.
Population and housing	**Small impact (Category 1).** Changes to regional population and housing availability and value would be small from continued operations and refurbishment associated with the license renewal term. With no increase in employment expected during the license renewal term, population and housing availability and values would not be affected by continued power plant operations. Changes in housing availability and value would have a greater effect on sparsely populated areas than areas with higher density populations.
Transportation	**Small impact (Category 1).** Changes to traffic volumes would be small from continued operations and refurbishment activities associated with the license renewal term. Changes in employment would have a greater effect on rural areas, with less developed local and regional networks. Impacts would be less noticeable in semi-urban areas depending on the quality and extent of local access roads and the timing of plant shift changes when compared to typical local usage.
Human Health	
Radiation exposures to the public	**Small impact (Category 1).** Radiation doses to the public from continued operations and refurbishment associated with the license renewal term are expected to continue at current levels, and would be well below regulatory limits.
Radiation exposures to occupational workers	**Small impact (Category 1).** Occupational doses from continued operations and refurbishment associated with the license renewal term are expected to be within the range of doses experienced during the current license term, and would continue to be well below regulatory limits.
Human health impact from chemicals	**Small impact (Category 1).** Chemical hazards to workers would be minimized by observing good industrial hygiene practices. Chemical releases to the environment and the potential for impacts to the public are minimized by adherence to discharge limitations of NPDES permits.

Table 2.1–1. (cont.)

Issue	Impact
Human Health (cont.)	
Microbiological hazards to the public (plants with cooling ponds or canals or cooling towers that discharge to a river)	**Small, moderate, or large impact (Category 2).** These organisms are not expected to be a problem at most operating plants except possibly at plants using cooling ponds, lakes, or canals that discharge to rivers. Impacts would depend on site-specific characteristics.
Microbiological hazards to plant workers	**Small impact (Category 1).** Occupational health impacts are expected to be controlled by continued application of accepted industrial hygiene practices to minimize worker exposures.
Chronic effects of electromagnetic fields (EMFs)	**Uncertain impact.** Studies of 60-Hz EMFs have not uncovered consistent evidence linking harmful effects with field exposures. EMFs are unlike other agents that have a toxic effect (e.g., toxic chemicals and ionizing radiation) in that dramatic acute effects cannot be forced and longer-term effects, if real, are subtle. Because the state of the science is currently inadequate, no generic conclusion on human health impacts is possible.
Physical occupational hazards	**Small impact (Category 1).** Occupational safety and health hazards are generic to all types of electrical generating stations, including nuclear power plants, and is of small significance if the workers adhere to safety standards and use protective equipment.
Electric shock hazards	**Small, moderate, or large impact (Category 2).** Electrical shock potential is of small significance for transmission lines that are operated in adherence with the National Electrical Safety Code (NESC). Without a review of each nuclear plant transmission line conformance with NESC criteria, it is not possible to determine the significance of the electrical shock potential.
Postulated Accidents	
Design-basis accidents	**Small impact (Category 1).** The NRC staff has concluded that the environmental impacts of design-basis accidents are of small significance for all plants.
Severe accidents	**Small impact (Category 2).** The probability-weighted consequences of atmospheric releases, fallout onto open bodies of water, releases to groundwater, and societal and economic impacts from severe accidents are small for all plants. However, alternatives to mitigate severe accidents must be considered for all plants that have not considered such alternatives.

Table 2.1–1. (cont.)

Issue	Impact
Environmental Justice	
Minority and low-income populations	**Small or moderate impact (Category 2).** Impacts to minority and low-income populations and subsistence consumption will be addressed in plant-specific reviews. See NRC Policy Statement on the Treatment of Environmental Justice Matters in NRC Regulatory and Licensing Actions (69 FR 52040).
Solid Waste Management	
Low-level waste storage and disposal	**Small impact (Category 1).** The comprehensive regulatory controls that are in place and the low public doses being achieved at reactors ensure that the radiological impacts to the environment would remain small during the term of a renewed license.
Onsite storage of spent nuclear fuel	**Small impact (Category 1).** The expected increase in the volume of spent fuel from an additional 20 years of operation can be safely accommodated onsite with small environmental effects through dry or pool storage at all plants, if a permanent repository or monitored retrievable storage is not available.
Offsite radiological impacts of spent nuclear fuel and high-level waste disposal	**(Category 1).** For the high-level waste and spent-fuel disposal component of the fuel cycle, the EPA established a dose limit of 15 millirem (0.15 mSv) per year for the first 10,000 years and 100 millirem (1.0 mSv) per year between 10,000 years and 1 million years for offsite releases of radionuclides at the proposed repository at Yucca Mountain, Nevada. The Commission concludes that the impacts would not be sufficiently large to require the NEPA conclusion, for any plant, that the option of extended operation under 10 CFR Part 54 should be eliminated. Accordingly, while the Commission has not assigned a single level of significance for the impacts of spent fuel and high level waste disposal, this issue is considered Category 1.
Mixed-waste storage and disposal	**Small impact (Category 1).** The comprehensive regulatory controls and the facilities and procedures that are in place ensure proper handling and storage, as well as negligible doses and exposure to toxic materials for the public and the environment at all plants. License renewal would not increase the small, continuing risk to human health and the environment posed by mixed waste at all plants. The radiological and nonradiological environmental impacts of long-term disposal of mixed waste from any individual plant at licensed sites are small.
Nonradioactive waste storage and disposal	**Small impact (Category 1).** No changes to systems that generate nonradioactive waste are anticipated during the license renewal term. Facilities and procedures are in place to ensure continued proper handling, storage, and disposal, as well as negligible exposure to toxic materials for the public and the environment at all plants.

Table 2.1–1. (cont.)

Issue	Impact
Cumulative Impacts	
Cumulative impacts	**(Category 2).** Cumulative impacts of license renewal must be considered on a plant-specific basis. Impacts would depend on regional resource characteristics, the resource-specific impacts of license renewal, and the cumulative significance of other factors affecting the resource.
Uranium Fuel Cycle	
Offsite radiological impacts – individual impacts from other than the disposal of spent fuel and high-level waste	**Small impact (Category 1).** The impacts to the public from radiological exposures have been considered by the Commission in Table S-3 of this part. Based on information in the GEIS, impacts to individuals from radioactive gaseous and liquid releases including radon-222 and technetium-99 would remain at or below the NRC's regulatory limits.
Offsite radiological impacts – collective impacts from other than the disposal of spent fuel and high-level waste	**(Category 1).** There are no regulatory limits applicable to collective doses to the general public from fuel-cycle facilities. The practice of estimating health effects on the basis of collective doses may not be meaningful. All fuel-cycle facilities are designed and operated to meet the applicable regulatory limits and standards. The Commission concludes that the collective impacts are acceptable. The Commission concludes that the impacts would not be sufficiently large to require the NEPA conclusion, for any plant, that the option of extended operation under 10 CFR Part 54 should be eliminated. Accordingly, while the Commission has not assigned a single level of significance for the collective impacts of the uranium fuel cycle, this issue is considered Category 1.
Nonradiological impacts of the uranium fuel cycle	**Small impact (Category 1).** The nonradiological impacts of the uranium fuel cycle resulting from the renewal of an operating license for any plant would be small.
Transportation	**Small impact (Category 1).** The impacts of transporting materials to and from uranium-fuel-cycle facilities on workers, the public, and the environment are expected to be small.
Termination of Nuclear Power Plant Operations and Decommissioning	
Termination of plant operations and decommissioning	**Small impact (Category 1).** License renewal is expected to have a negligible effect on the impacts of terminating operations and decommissioning on all resources.

2.2 No-Action Alternative

The no-action alternative represents a decision by the NRC not to renew the operating license of a nuclear power plant beyond the current operating license term. At some point, all nuclear plants will terminate operations and undergo decommissioning. Under the no-action alternative, plant operations would terminate at or before the end of the current license term.

Not renewing the license and ceasing operation under the no-action alternative may lead to a variety of potential outcomes, but these would be essentially the same regardless of when decommissioning occurs. Termination of nuclear power plant operations would result in a net reduction in power production capacity. The No-Action Alternative, unlike the other alternatives, does not expressly meet the purpose and need of the proposed action, as it does not provide a means of meeting future electric system needs. No action, on its own, would likely create a need for replacement power, conservation and energy efficiency (demand-side management), purchased power, or some combination of these options.

North American Electric Reliability Corporation

For the purpose of ensuring continued reliability of electric service, the Energy Policy Act of 2005 (EPAct) authorized the creation of an independent, international Electric Reliability Organization (ERO) and directed the Federal Energy Regulatory Commission (FERC) to establish rules for EROs as well as a process for certification. In July 2006, FERC approved the North American Electric Reliability Corporation's (NERC) application to become the ERO for the United States.

Established in 1968, NERC is a regulatory organization that develops and enforces reliability standards; monitors the bulk power system; assesses future adequacy; audits owners, operators, and users for preparedness; and educates and trains industry personnel. NERC is composed of eight Regional Reliability Councils (RRCs), each responsible for a specific geographic area. RRC membership typically includes investor-owned utilities; Federal power agencies; rural electric cooperatives; State, municipal, and provincial utilities; Canadian Crown corporations (only for some RRCs); independent power producers; power marketers; and end-use customers. These entities account for virtually all bulk electricity (i.e., electricity provided at 100 kV or higher) supplied in the United States, Canada, and a portion of Baja California Norte, Mexico. NERC's proposal to delegate enforcement authority for reliability standards to eight regional entities is pending before the Federal Energy Regulatory Commission.

2.3 Alternative Energy Sources

The NRC evaluated the environmental impacts of energy sources that may serve as alternatives to license renewal. Alternative energy sources included a variety of fossil fuel, new nuclear, renewable energy, and other alternatives such as conservation and energy efficiency as well as purchased power. These evaluations are presented to compare the impacts between the alternatives and license renewal.

The following sections describe the alternatives identified by the NRC as capable of meeting the purpose and need of the proposed action (license renewal) or replacing the power generated by a nuclear power plant. A reasonable alternative must be commercially viable or expected to become so in the near future prior to the expiration of the operating license. The replacement power generated must equal the base load capacity previously supplied by the nuclear plant.

Should the need arise to replace the generating capacity of a nuclear reactor, power could be provided by a suite of alternatives and combinations of alternatives, including expanding the capacities of one or more existing power generating plants within a region. The number of possible combinations of alternatives that could replace the generating capacity of a nuclear power plant is large. Based on this, the NRC has only evaluated individual alternatives rather than combinations of alternatives in this GEIS. However, combinations of alternatives may be considered during plant-specific license reviews.

2.3.1 Alternative Electricity Generation

The following sections describe alternative means of generating electricity that could serve to replace the power produced by an existing nuclear plant. These alternatives must be viable on a utility scale or be expected to become so within the foreseeable future. Should the need arise to replace the generating capacity of a nuclear reactor, the necessary alternative power is likely to be provided by a suite of alternatives, which could include expanding the capacities of one or more existing power-generating facilities within the region. As discussed in Chapter 1, the NRC does not engage in energy planning decisions and makes no judgment on which energy alternatives evaluated would be the most likely alternative in any given case.

Also addressed are several non-generation alternatives that may serve to offset or replace the electricity generated by nuclear power plants. These options include purchased power and conservation and energy efficiency (demand-side management).

The NRC relies on many sources of information to determine which alternatives are available and commercially viable. DOE's Energy Information Administration (EIA) maintains the official energy statistics of the Federal Government. The NRC uses information from four EIA reports: *Electric Power Annual*, *Annual Energy Review*, *Renewable Energy Annual*, *Renewable Energy Trends in Consumption and Electricity*, *Annual Energy Outlook*, and *Assumptions to the Annual Energy Outlook* to identify alternatives to the proposed action (license renewal). The NRC also uses state, regional, and in some cases, utility or system level assessments and projections.

In the EIA's *Annual Energy Outlook 2007 with Projections to 2030*, EIA projects a continued nationwide increase in energy consumption and generating capacity throughout the 2030

forecast period (EIA 2007a). The EIA also forecasts continued growth in coal, natural gas, renewable, and nuclear-powered generation through 2030.

In the following sections, the NRC presents a variety of alternatives to license renewal. In Chapter 4, NRC compares the environmental impacts of alternatives to the environmental impacts of license renewal.

2.3.2 Fossil Fuel Energy Alternatives

The EIA indicates that fossil fuels will likely continue to provide the bulk of commercial electric power generation through 2030. The EIA projects that natural-gas-fired, combined-cycle, or combustion turbine technology will account for most new generating capacity. As natural gas prices increase, coal-fired generation will begin to account for the largest share of generating capacity (EIA 2007a). The EIA projects that coal will account for the majority (54 percent) of new capacity through 2030 and that advanced coal technologies, such as coal-fueled integrated gasification combined-cycle (IGCC) generation, will become less costly relative to improved natural-gas-fired, combined-cycle technologies (EIA 2007a). EIA suggests that changes in electricity generation costs, which are highly dependent on emission control costs, will drive utilities' choices in generating technologies (EIA 2007a).

The EIA asserts that oil-fired plants will account for virtually no new generation capacity in the United States through 2030, projecting a 0.6-percent annual decrease in electric sector oil consumption because of higher fuel costs and lower efficiencies (EIA 2007a).

Advanced coal technologies will likely become increasingly important as regulations on power plant emissions evolve. Technologies often referred to as "clean coal technologies," which include coal cleaning processes during combustion, coal gasification technologies, improved combustion technologies, and improved devices for capturing pollutants, will play an important role. Emissions controls and advanced-combustion technologies will likely play an increasingly important role for other fossil-fuel power generating systems.

Greenhouse gas controls may be required for future fossil fuel power plants. Though nationwide greenhouse gas regulations do not yet exist, regional-, State-, and local-level initiatives have begun to restrict CO_2 and other greenhouse gas emissions or implement emissions-trading schemes. Fossil fuel alternatives – especially those burning coal, the most carbon-intensive of the fossil fuels – have the greatest exposure to risk from carbon regulation, and, in some areas, state-level permitting authorities have denied permits for new coal plants.

The technology needed for capture and removal of greenhouse gases in fossil fuel emissions (primarily CO_2) will require additional development to become commercially viable. The

infrastructure necessary to remove greenhouse gases on a scale sufficient to support utility-scale power generation does not presently exist, though it is the subject of ongoing research.

2.3.3 New Nuclear Power Plant Alternatives

The last nuclear power plant to come on line in the U.S. was Watts Bar in 1996. Since then, nuclear power generating capacity has only been increased through power uprates at existing plants. The EIA projects that by 2030, power uprates would increase nuclear power generating capacity by 3 GW. The EIA also projects an additional 12.5 GW of nuclear power from new plants, partly because of tax credits and other incentives. Nuclear plant retirements would result in the loss of 2.6 GW of generating capacity. In proportion to other sources of electrical power, the EIA projects that the percent from nuclear will decrease slightly through 2030 (EIA 2007a).

Currently, four nuclear reactor designs have been certified, and seven additional designs are undergoing review. These include the 1300 MW(e) U.S. Advanced Boiling Water Reactor (10 CFR Part 52, Appendix A), the 1300 MW(e) System 80+ Design (10 CFR Part 52, Appendix B), the 600 MW(e) AP600 Design (10 CFR Part 52 Appendix C), and the 1100 MW(e) AP1000 Design (10 CFR Part 52, Appendix D).

The NRC has received a number of combined operating license (COL) applications and has completed reviews on several early site permits (ESPs). The issuance of a COL authorizes the applicant to construct and operate a nuclear power facility at a specific site. An ESP is not a license to build a nuclear power plant; however, it initiates a process to assess whether the proposed site is suitable for the construction of a nuclear power plant.

2.3.4 Renewable Energy Alternatives

The EIA projects that total renewable energy power generating capacity will increase through 2030, primarily due to tax credits and other incentives. In proportion to other sources of electrical power, the EIA expects renewable energy power generation to remain relatively constant (EIA 2007a).

The NRC considers the following renewable energy alternatives for possible replacement power: hydroelectric, geothermal, wind (both land-based and offshore), biomass (energy crops, agricultural crop residues, and urban wood and forest wastes), refuse-derived biomass (municipal solid waste, refuse-derived fuel, and landfill gas), solar (thermal), solar (photovoltaic), and ocean wave and current. Combinations of energy renewable alternatives may be considered during plant-specific license reviews.

Few renewable energy alternatives are capable of providing total replacement power. Most renewable energy alternatives could not replace a nuclear reactor, and would be part of a combination of energy alternatives.

Environmental impacts of construction and operation of renewable energy alternatives are quite different. Resource areas with the greatest range of impacts include air quality, hydrology, and land use. Air quality impacts from hydroelectric, wind, solar, and wave and current would be negligible; however, biomass-fueled energy would emit air pollutants, some of them hazardous. All renewable energy alternatives would rely on modest amounts of water; however, those that would rely on conventional steam cycles to power turbine generators (biomass, geothermal, solar [thermal]) would have higher water demands. All renewable energy alternatives, except for offshore wind and ocean wave and current would require land. Hydroelectric and solar would require significant amounts of land.

EIA projections through 2030 suggest that hydroelectric power will provide the bulk of renewable electric power generation. Biomass, wind, and geothermal energy will likely constitute the remaining sources of renewable energy. A brief overview of renewable energy alternatives are discussed in the following paragraphs.

Hydroelectric Energy

Currently, there are 2000 operating hydroelectric plants in the United States. Hydroelectric technology operates by capturing the energy of flowing water and directing it to a turbine and generator to produce electricity. There are two fundamental hydropower facility designs: “run-of-the-river” facilities that simply redirect the natural flow of a river, stream, or canal through a hydroelectric facility, and “store-and-release” facilities that block the flow of the river by using dams that cause the water to accumulate in an upstream reservoir.

Hydropower has provided 80 percent of commercial electricity generated by all renewable alternatives and is projected to remain so through the year 2030. However, the potential for future construction of large dams has diminished due to increased public concerns over flooding, habitat alteration and loss, and destruction of natural river courses. Additional demands for river water have also reduced water flow.

Large hydroelectric facilities constructed on major rivers can have peak power capacities as high as 10,000 MW(e). However, river flow conditions and other circumstances and factors (spawning periods of anadromous fish) often require dam operators to divert river flow around power-generating turbines over various periods of time, thereby reducing the amount of power generated.

Geothermal Energy

Geothermal energy is energy in the form of heat contained below the earth's surface in hydrothermal zones (hot water or steam trapped in an aquifer), hot and dry geologic formations (referred to as hot dry rock resources), or in geopressurized resources (hot brine aquifers existing under pressure). The technical approaches to exploiting geothermal energy resources are quite similar. Wells are drilled to extract the heat energy. Hot water or steam is brought to the surface where the heat energy is used to generate electricity. Hydrothermal resources are the only geothermal resources that have been exploited to date.

Most geothermal resources exist in the western United States (see Figure D.10-16, Appendix D). Development of geothermal energy has been limited to California, Nevada, Utah, and Hawaii. The greatest concentration of geothermal power is in California. As of 2002, 3000 MW(e) were being produced in California geothermal power plants. Estimates of available geothermal resources in California range from 2000 to 10,000 MW(e) (Sass and Priest 2002). The estimate of the electricity generating capacity of all U.S. geothermal resources accessible by current technology is 23,000 MW. However, some resources are located in remote areas and their connection to load centers would occur only at substantial cost (EERE 2007).

Historically, geothermal resources have been used to commercially produce electricity. However, these systems have been relatively small (generating from 250 kW to 70 MW). Recent advances in hydrothermal technology have increased the potential for electricity generation at larger scales.

Wind Energy

Wind energy facilities (wind farms or wind parks) consist of an array of wind turbines designed to capture the energy of the wind. The wind turbine's rotor blade captures wind energy and converts it to mechanical energy to produce electricity.

Early wind turbine designs required the turbine's rotor to spin at very high speeds to produce power. This resulted in bird collisions and a considerable amount of aerodynamic noise. Advances in wind technology allow wind turbines to efficiently generate electricity at lower rotor speeds. Improvements in blade aerodynamics permit wind turbines to capture energy from lower wind speeds. Lower rotational speeds have reduced the potential for bird strikes and aerodynamic noise.

The percentage of time that a wind farm produces electricity is relatively low due to the unpredictability of adequate wind. Presently, energy extracted from wind cannot be stored.

Equipping wind turbines with batteries or other energy-storage systems would allow the harvesting of wind energy when the wind is available.

Modern wind turbines have rotor diameters greater than 100 m (300 ft) on towers that are hundreds of feet tall and are capable of generating as much as 5 MW(e) under ideal wind conditions. A large number of wind turbines are required to generate commercial levels of power (greater than 500 MW). Considerable distances are required between wind turbines to avoid turbulence and guarantee optimal performance. Consequently, land area requirements for commercial-scale wind farms can be substantial, though actual land area used for turbines and infrastructure (including roads and buried power or communications cables) may be only a small fraction – typically 5 percent – of the total land required.

Wind resources exist throughout the United States and in offshore areas, but are most prevalent in the upper Midwest and western states. (See Figures D.10-17 and D.10-18 for wind resource distributions in the United States and in offshore areas, respectively.) The most ideal settings for wind farms are in rural or remote areas. If transmission facilities do not already exist, additional development costs and environmental impacts would result from the construction of electric transmission lines.

Offshore wind turbines are identical in appearance and function to their land-based counterparts. Typically, power is delivered from each turbine by underwater cable to a land-based substation. Currently no offshore wind farms exist in the United States. although some have been proposed. Offshore wind farms are operational in Europe, and are typically located on the outer continental shelf. The Minerals Management Service of the Department of Interior recently published a Programmatic Environmental Impact Statement (PEIS) for offshore renewable energy facilities (MMS 2007). The Minerals Management Service identified potential environmental impacts of offshore facilities and established minimal controls and stipulations for future leases. Offshore wind farms could produce some adverse impacts including visual resource degradation, fish and marine mammal habitat alteration, bird collision hazards, shipping lane interference, and noise that could cause avoidance behavior in aquatic species.

Biomass Energy

Biomass energy sources include a wide variety of materials, including municipal solid waste, refuse-derived fuel, landfill gas, urban wood wastes, forest residues, agricultural crop residues and wastes, energy crops. Biomass resources are widely available throughout the United States (see Figure D.10-19). Biomass energy conversion is accomplished using a wide variety of technologies, some of which are similar in appearance and operation to fossil fuel plants. Some biomass technologies include: direct combustion in a boiler or incinerator to produce steam, biomass cofiring along with fossil fuels (primarily coal) in boilers to produce steam, producing synthetic liquid fuels that are subsequently combusted, gasification to produce

gaseous fuels that are subsequently combusted, and anaerobic digestion to produce biogas. Synthetic fuel production, gasification, and anaerobic digestion technologies have not been used to produce utility-scale electricity. Biogas is typically consumed in combined heat and power plants with relatively small power generating capacities. Despite operational similarities, the environmental impacts of biomass energy plants differ from those of fossil fuel plants. Although fossil- and biomass-fueled facilities both release CO, biomass-fueled facilities utilizing energy crops or forest industry wastes are said to be carbon-neutral since the energy crops offset the amount of CO_2 produced. This is not true for biomass facilities relying on municipal solid waste, refuse-derived fuel, or landfill gas. Depending on the fuel, the combustion technology, and the operating conditions, some biomass energy systems impact air quality and generate solid wastes that must be properly managed. Biomass fuel from wood, energy crops, or crop residues generate fewer criteria pollutants per unit of energy delivered than coal. However, toxic pollutants could be released from unprocessed municipal solid waste due to incomplete combustion.

Biomass cofiring with coal is technically feasible and is a potential near-term alternative for commercial power generation. Additionally, it would reduce emissions of criteria pollutants. Wood has been the most widely used biomass fuel for electricity generation. Of the nearly 1,000 operating biomass power plants, the majority involve direct biomass combustion while only a small number involve biomass cofiring with coal (NREL 2006).

DOE conducted a review of biomass technologies and projected future performance based on anticipated technological advances through 2030 (EERE 1997). The technologies studied included biomass-only integrated gasification combined-cycle, direct burn biomass facilities, and biomass cofired with coal facilities. Energy crops (wood) or agricultural crop residues offer the greatest potential for energy production. There are three types of municipal solid waste incinerators: mass burn, modular, or refuse-derived fuel incinerators. Mass burn incinerators generally burn unprocessed municipal solid waste. Modular units are smaller in capacity and more selective of the type of waste utilized as fuel and often contain dual combustion chambers to ensure more complete combustion. Refuse-derived fuel incinerators utilize processed municipal solid waste which removes hazardous and recyclable constituents. While it is technically feasible to operate a biomass combustion plant on municipal solid waste or refuse-derived fuel, source material may not be reliable or consistent. Consequently, municipal solid waste is often cofired with other fuels such as coal in modified boilers.

Landfill gas is another potential source of biomass energy for electric power production. Landfills in which organic materials are disposed represent the largest source of methane in the United States. Landfill gas composition varies depending on the type of waste. Collecting landfill gas is a relatively straightforward process that involves placing recovery wells and simple gas collection systems. Of the approximately 2300 operating or recently closed landfills in the United States, 427 landfills are currently equipped with gas collection systems. In 2006,

landfills produced enough gas to generate 10 billion kWh of electricity. An additional 560 landfills could be adapted to landfill gas-to-energy production (see Figure D.10-23). Since gas is produced continuously, landfill gas-to-energy plants can have capacity factors greater than 90 percent and can be relied upon as a source of replacement power.

Solar Power

Solar power technologies that are commercially viable for the production of electricity are thermal and photovoltaic. However, neither technology has been widely used for grid-connected power production. Thermal systems or concentrating solar power systems are designed to concentrate solar energy by as much as 10,000 times to generate high-temperature thermal energy. Photovoltaic systems use semiconductors that convert solar energy to electricity. Some photovoltaic designs also concentrate the solar energy but do not use heated working fluid-like concentrated solar power systems.

Concentrating solar power systems use mirrors to reflect solar radiation to heat a fluid (typically, a high-boiling synthetic oil) to temperatures as high as 400 to 800°C (752 to 1472°F). The fluid then transfers its heat to a conventional steam cycle turbine generator to produce electricity. Three principal configurations of concentrating solar power systems have been developed: (1) a power trough system consisting of a series of mirrors arranged to reflect energy along a line to a pipe containing the working fluid; (2) mirrors that move with the sun to direct solar radiant energy into a central reservoir containing working fluid; and (3) a system of mirrors arranged on a dish that reflects solar energy to a focal point where a working fluid is heated and directed to engines that generate electricity. These systems only differ in how the mirrors are arranged. Of the three designs, power trough systems are the only mirror configurations that have been used in commercial applications for electricity development.

While most concentrating solar power plants use solar radiation to heat a working fluid, direct steam production is also feasible. Most concentrating solar power plants also have back-up capabilities, typically using natural gas, to provide steam to address load demands during off-peak solar radiation periods.

Solar photovoltaic systems convert solar radiation directly into electricity. Three types of solar collectors have been developed: single crystal, polycrystalline, and amorphous silicon. Single crystals exhibit the highest efficiency, but polycrystalline cells now represent the majority of the photovoltaic market. Historically, photovoltaic systems have not been used for commercial power generation, but have been used to power appliances and homes in remote locations that cannot be easily connected to the transmission grid. As with concentrating solar power systems, designs of photovoltaic power systems can include mirrors or concentrators that can enhance the power generating capacity of the photovoltaic cells. Schematics of photovoltaic power systems appear in Figures D.10-25 and D.10-26.

To serve as a source of commercial power, photovoltaic systems and concentrating solar power systems would need to work in conjunction with energy storage systems such as batteries. Solar intensity varies by a small amount and solar cells can be effectively utilized within the United States. The greatest power generating potential is in the southwestern states (see Figure D.10-27).

Because of the relatively low power output of individual solar cells, utility-scale photovoltaic systems would involve a vast array of multiple solar cells. Given current technology, large amounts of land would be required to support commercial scale photovoltaic power generation (UCS 2007).

The manufacture of solar cells involves the use of many hazardous chemicals, including toxic gases (e.g., arsine, phosphine, silane, sulfur hexafluoride, molybdenum hexafluoride, tungsten hexafluoride, and hydrogen selenide, hydrochloric and hydrofluoric acids), toxic metals (e.g., arsenic, cadmium, selenium, and various other heavy metals), and numerous flammable, corrosive, or highly reactive chemicals. In addition, the photocells contain cadmium, selenium, and other heavy metals. A 2003 study conducted jointly by the Electric Power Research Institute and the California Energy Commission concluded that the manufacture and use of photocells presented no significant health or environmental risk (EPRI and CEC 2003).

Ocean Wave and Current Energy

Offshore technologies that harness the energy of ocean waves and current are in their infancy, and have not been used at utility scale. These technologies may become commercially viable in the near future.

A variety of wave energy technologies have been considered. Research and development efforts have focused on point absorbers, attenuators, overtopping devices, and terminators. These technologies differ in size, anchoring method, spacing, interconnection, array patterns, and water depth limitations.

Point absorbers and attenuators allow waves to interact with a floating buoy. The wave motion is converted into mechanical energy to drive a generator. Overtopping devices trap some portion of an incident wave at a higher elevation than the average height of the surrounding sea surface, while terminators allow waves to enter a tube, compressing air that is then used to drive a generator.

No point absorber facilities are currently in commercial operation. A 50-MW commercial facility is proposed for installation off the coast of Oregon, with an estimated total power output of 153,300 MWh/yr. It is expected that the proposed wave facility would consist of 200 devices deployed in an array of four rows that are parallel to the beach. Each row would consist of

roughly 54 250-kW buoys. Although no wave energy capture devices are currently deployed along the U.S. coastlines, feasibility studies and prototype tests have been conducted for locations off the coasts of Hawaii, Oregon, California, Massachusetts, and Maine.

Ocean current energy technology is also in its infancy. Existing prototypes capture ocean energy with submerged turbines that are similar to wind turbines. Although the functions of ocean turbines and wind turbines are identical, ocean turbines have substantially greater power generating capacity since the energy contained in moving water is approximately 800 times greater than air. In relatively constant currents with average velocities of 3.5 mph (5.6 km/h) or variable tidal currents averaging 5.8 mph (9.3 km/h), ocean turbines can produce sufficient capacity factors for baseload demand. Various ocean turbine designs are undergoing research, development, and demonstration.

2.3.5 Other Alternatives

As discussed in Section 2.3.1, various electric power generating technologies can be employed to replace the power provided by a nuclear power plant. The preceding sections have identified those technologies that the NRC considers to be viable candidates as alternatives. However, as suggested in Section 2.3.1, in addition to these technological options, alternatives of an administrative nature also exist. Two such alternatives that the NRC believes are the most likely candidates for consideration are purchased power from within or outside of the region, as well as conservation and energy efficiency measures (collectively, part of a range of demand-side management measures).

Purchased Power

Bulk electricity purchases currently take place within geographic regions established by the North American Electric Reliability Corporation (NERC), the authorized Electric Reliability Organization (ERO) for the United States. However, interconnections exist between NERC regions that allow for power exchanges between the regions when necessary to satisfy short-term demand. The NRC recognizes the possibility that replacement power may be imported from outside a nuclear power plant's region. In most instances, importing power from distant generating sources would have little or no measurable environmental impact in the vicinity of the nuclear power plant; however it could cause environmental impacts where the power is generated. Importing power from outside of the region is one of many sources of replacement power.

Many factors influence power purchasing decisions, with respect to both technical feasibility and cost. The existing transmission grid may not support every possible power transfer agreement. Incremental power transfer capacities have been established between grid segments both within and across NERC regions, and modest amounts of power routinely transfer across those

points. However, those capabilities were established to ensure overall grid stability and reliability under both routine and non-routine conditions and would not be compromised to support a power purchase agreement even though some transfer capacities are in the thousands of megawatts.

Long-term transfers of utility-scale power would require modification of one or more existing transmission grid segments (as well as modifications to substations and power synchronization equipment) and could require construction of new transmission line segments, even when the power transfer occurs between utilities within the same NERC region. The more geographically distant the exporting source, the greater the likelihood that new or modified interconnecting transmission line segments would be necessary. Power purchase agreements would also be used in emergency situations or to alleviate a capacity shortfall in the near term; however, large-scale, long-term agreements would be less cost effective than other technological options.

Conservation and Energy Efficiency Measures (Demand-Side Management) Programs

Conservation and energy efficiency programs have been in place since the passage of the Public Utility Regulatory Act of 1978 (PURPA), which required utilities to offer programs that resulted in increased conservation of electric energy and to identify and pursue load management techniques. The need for alternative or replacement power can precipitate or invigorate conservation and energy efficiency efforts designed to either reduce electricity demand at the retail level or alter the shape of the electricity load. All such efforts are broadly categorized as demand-side management. Conservation and energy efficiency measures may be championed by the nuclear power plant operator, which may offer its customers incentives to undertake power conservation actions or may provide materials or information that would facilitate such actions.

Conservation and energy efficiency measures implemented by electric utilities are designed to shape and modify customer electric power usage habits and/or alter load profiles. Conservation and energy efficiency programs can take many forms and have widely different return-on-investment schedules. Program objectives can include:

- Energy efficiency programs that reduce energy use primarily through the use of technologically advanced devices and equipment for lighting (e.g., compact fluorescent lamps), heating and cooling systems, electric power driven equipment, or advanced building materials and construction techniques;

- Peak load reduction programs aimed at reducing load at peak times by the use of programs such as interruptible load tariffs, time-of-use rates, and direct load controls;

- Increased flexibility in load shaping by programs that modify prices, real-time pricing, and time-of-use rates for periods with hours that adjust to specific parameters such as resource availability or changes in power costs; and

- Load-building programs that attempt to encourage expanded consumption of electricity in off-peak hours

Data contained in the latest EIA power annual report (EIA 2007b) indicate that conservation and energy efficiency programs have had a relatively stable impact on actual total peak load production over the period 1995 through 2006.

EIA data show that historically, residential electricity consumers have been responsible for the majority of peak load reductions achieved by conservation and energy efficiency programs. However, participation in most conservation programs is voluntary, and the existence of a program does not guarantee that reductions in electricity demand would occur.

Conservation and energy efficiency programs could reduce overall environmental impacts associated with energy production. Historically, due to modest levels of participation nationwide, the NRC concludes it is unlikely that conservation and energy efficiency programs would generate sufficient participation needed to replace the power from a nuclear reactor. Consequently, conservation and energy efficiency programs are not considered to be viable alternatives by themselves, but could play an important role in a combination of alternative power strategies.

2.4 Comparison of Alternatives

This section provides a summary comparison of the environmental impacts of the proposed action and alternatives. Tables 2.4-1 through 2.4-5 provide an overview of the findings of the impact analyses (presented in Chapter 4) for the proposed action and alternatives, including the No-Action Alternative, alternative generation technologies (fossil energy, nuclear energy, and renewable energy), energy conservation, and power purchases. Impacts related to construction (Table 2.4-1), operations (Table 2.4-2), postulated accidents (Table 2.4-3), termination of nuclear power plant operations and decommissioning (Table 2.4-4), and the fuel cycle (Table 2.4-5) are provided. In each of these tables, important aspects of each alternative that serve as the basis of the assessment are identified as well as the magnitude of the anticipated impact in each resource area. Impacts are evaluated and compared in a general fashion. More detailed analyses incorporating relevant site-specific factors will be provided in each plant-specific SEIS.

The impacts of renewing the operating license of a nuclear power plant are comparable to the impacts of energy alternatives. Replacement power alternatives would require the construction of a new power plant or modification of the electric transmission grid. Each plant-specific SEIS must analyze the impacts of the proposed action (license renewal) as well as alternatives. The new power plants would also have operational impacts. Conversely, license renewal does not require major construction and operational impacts would not change beyond what is currently being experienced. Other alternatives that would not have construction or operational impacts include conservation and energy efficiency (demand-side management), delayed retirement, repowering, and purchased power.

Operational impacts of license renewal are comparable to replacement power alternatives and some renewable alternatives in some resource areas (socioeconomics), but quite different in other resource areas (air emissions, fuel cycle, land use, and water consumption). Renewable energy alternatives (wind, ocean wave, and ocean current alternatives) have very few operational impacts, while others (biomass combustion and conventional hydropower) can have considerable impacts. Some renewable energy alternatives (wind and solar) have relatively low but regionally variable capacity factors.

The proposed action and alternatives differ in other respects, including the consequences of accidents. The proposed action and new nuclear energy alternatives all may have low-probability but potentially high-consequence accidents in comparison to non-nuclear alternatives.

Termination of nuclear power plant operations and decommissioning impacts at existing nuclear plant sites would eventually occur regardless of a decision to renew their licenses. In this analysis, those impacts are not attributed to the proposed action, and the effects of the proposed action on the impacts from the termination of nuclear power plant operations and decommissioning are small in all resource areas. Because this analysis is intended to demonstrate the impacts of the full life cycle of any alternative, termination of plant operations and decommissioning impacts of other alternatives are considered. Decommissioning of an alternative nuclear reactor would be addressed by a separate licensing decision, and an associated NEPA assessment as would be the case for decommissioning of the reactor for which license renewal is under consideration.

Fuel cycle impacts have been evaluated for license renewal and were found to be small for all resource areas. Other alternatives would have larger fuel cycle impacts mostly associated with land disturbance at extraction sites or no impacts for alternatives such as wind, wave, current, or solar alternatives that do not have fuel cycles.

Table 2.4-1. Impacts of Construction Under the Proposed Action and Alternatives

Resource Area	Proposed Action[b]	No-Action Alternative[c]	Assessment Basis and Impact Magnitude[a]			Demand-Side Management	Power Purchases
			Fossil Energy Alternatives	Nuclear Energy Alternatives	Renewable Energy Alternatives		
General	Only minor construction projects are associated with the proposed action. Original plant construction is not part of the proposed action.	No construction at the plant sites would occur if license renewal is denied. Construction could occur in other areas if new power plants are needed to replace lost capacity.	Major construction projects would be required to build replacement fossil, nuclear, or renewable energy generation capacity. Impacts would vary according to the specific alternative technology selected and site-specific resource conditions that would be reviewed under separate National Environmental Policy Act of 1969 (NEPA) assessments. Impacts at brownfield sites would be smaller than at greenfield sites. Power may also be replaced by a portfolio of alternative technologies; in such cases, impacts would be additive, occurring at each facility commensurate with the technology and the percentage of replacement power it provides.			No construction would be associated with energy conservation programs implemented to offset lost generation capacity.	No construction would occur If available excess capacity is sufficient to offset losses. Construction could occur in those instances where modification to the transmission grid was required to bring the imported power to the load centers affected by reactor retirement.

(a) Impact magnitudes are defined in the text of Section 2.1.
(b) Refer to Table 2.1-1 for a more detailed presentation of the impacts of construction under the proposed action. These impacts are discussed in detail in Chapter 4.
(c) Refer to Section 4.1.3 for a discussion of the impacts of the No-Action Alternative.

Table 2.4-2. Impacts of Operations Under the Proposed Action and Alternatives

Resource Area	Proposed Action[b]	No-Action Alternative[c]	Assessment Basis and Impact Magnitude[a]: Fossil Energy Alternatives	Nuclear Energy Alternatives	Renewable Energy Alternatives	Demand-Side Management	Power Purchases
General	Continued operations under the proposed action would be comparable to what has occurred during the current license term.	Termination of plant operations would occur sooner than under the proposed action. After plant shutdown, some systems would remain in operation but at reduced levels. Operational impacts could occur in other areas if new power plants are needed to replace lost capacity.	Operation of a new fossil energy, nuclear, or renewable energy facility would introduce new impacts to the facility site and vicinity. Impacts would vary according to site-specific resource conditions that would be reviewed under separate NEPA assessments. If lost power capacity is replaced with a portfolio of alternatives, impacts would be additive, occurring at each of the facilities within the portfolio based on the nature of the technology employed and commensurate with the amount of power produced. Impacts at brownfield sites may be less than at greenfield sites.			No new operational impacts are anticipated to result from energy conservation programs implemented to offset lost generation capacity.	Impacts would occur in areas where purchased power is produced. Impact magnitude would be incremental and reflective of the increased amount of power being produced.
			Fossil energy alternatives would have similar operational impacts on the proposed action, nuclear, and some renewable alternatives (e.g., biomass), but would produce more air emissions.	Nuclear energy alternatives would have similar operational impacts on fossil and some renewable technologies, but would produce fewer air emissions than fossil and biomass technologies.	Renewable technologies differ greatly in terms of operational impacts.		

(a) Impact magnitudes are defined in the text of Section 2.1.
(b) Refer to Table 2.1-1 for a more detailed presentation of the impacts of operations under the proposed action. These impacts are discussed in detail in Chapter 4.
(c) Refer to Section 4.1.3 for a discussion of the impacts of the No-Action Alternative.

Table 2.4-3. Impacts of Postulated Accidents Under the Proposed Action and Alternatives

Resource Area	Proposed Action[b]	No-Action Alternative[c]	Assessment Basis and Impact Magnitude[a]				
			Fossil Energy Alternatives	Nuclear Energy Alternatives	Renewable Energy Alternatives	Demand-Side Management	Power Purchases
General	Postulated accidents associated with continued operations under the license renewal term include design-basis accidents and severe accidents. The impacts presented take into consideration the low probability of an accident occurring. Design-basis accidents have a small impact. Severe accidents could have moderate or large consequences.	Plant shutdown would occur sooner than under the proposed action. A reduction in accident risk would also occur sooner.	Accidents associated with fossil energy facilities would have short-term, localized effects.	Same as proposed action.	Accidents associated with biomass facilities would be comparable to those of fossil energy facilities. Accidents associated with hydropower (e.g., dam collapse) could have farther-reaching effects. Accidents associated with other renewable technologies would be inconsequential.	No accidents are associated with energy conservation.	Impacts would occur in areas where purchased power is produced. Nature and magnitude of the impact would depend on the technology used to produce the power and characteristics of the plant site. Because existing facilities would be used, little change in impact would be expected.

(a) Impact magnitudes are defined in the text of Section 2.1.
(b) Refer to Table 2.1-1 for a more detailed presentation of the impacts of accidents under the proposed action. These impacts are discussed in detail in Section 4.9.1.2.
(c) Refer to Section 4.1.3 for a discussion of the impacts of the No-Action Alternative.

Table 2.4-4. Impacts of Termination of Nuclear Power Plant Operations and Decommissioning Under the Proposed Action and Alternatives

			Assessment Basis and Impact Magnitude[a]				
Resource Area	**Proposed Action[b]**	**No-Action Alternative[c]**	**Fossil Energy Alternatives**	**Nuclear Energy Alternative**	**Renewable Energy Alternatives**	**Demand-Side Management**	**Power Purchases**
General	Termination of plant operations and decommissioning eventually would occur regardless of implementation of the proposed action. The proposed action would not contribute substantially to the impacts from the termination of plant operations and decommissioning.	The no-action alternative would not contribute to the impacts of termination of plant operations and decommissioning. Impacts would occur in other areas if new power plants are needed to replace lost capacity.	Termination of plant operations and decommissioning of a fossil energy, nuclear, or renewable energy facility would result in short-term impacts during facility dismantlement and longer-term waste management impacts. Impacts would vary according to site-specific resource conditions that would be reviewed under separate NEPA assessments. Analysis assumes that dams would remain in place for flood control after hydroelectric power generation ceases. Impacts at brownfield sites may be less than at greenfield sites.			No termination of operations and decommissioning impacts are anticipated to result from DSM programs implemented to offset lost generation capacity.	Because existing facilities would be used to produce purchased power, no termination of operations and decommissioning impacts would be associated with this alternative.

(a) Impact magnitudes are defined in the text of Section 2.1.
(b) Refer to Table 2.1-1 for a more detailed presentation of the impacts of decommissioning under the proposed action. These impacts are discussed in detail in Section 4.12.2.
(c) Refer to Section 4.1.3 for a discussion of the impacts of the No-Action Alternative.

Table 2.4-5. Impacts of the Fuel Cycle Under the Proposed Action and Alternatives

Resource Area	Assessment Basis and Impact Magnitude[a]						
	Proposed Action[b]	**No-Action Alternative[c]**	**Fossil Energy Alternatives**	**Nuclear Energy Alternative**	**Renewable Energy Alternatives**	**Energy Conservation**	**Power Purchases**
General	During the license renewal term, the proposed action would result in the need for continued mining and milling of uranium; fuel fabrication, reprocessing of spent fuel (if approved); and storage, transport, and disposal of spent fuel and other wastes.	The no-action alternative would result in a reduced need for nuclear fuel and a reduction in impacts associated with the uranium fuel cycle. Impacts associated with other fuel cycle(s) would occur if new power plants are needed to replace lost capacity.	The fuel cycle of fossil energy alternatives includes the extraction of coal (mining) or natural gas (pumping); transport of extracted fuel; and storage, transport, and disposal of combustion waste. Impacts would depend on characteristics of extraction sites.	Same as the proposed action	Of renewables, only biomass technologies have a fuel cycle per se. Biomass projects would have impacts associated with producing and transporting biomass fuel and storage and disposal of combustion waste. Impacts would depend on characteristics of areas used to produce fuel.	There is no fuel cycle associated with energy conservation.	The fuel cycle associated with power purchases would depend on the mix of plants that are used to produce purchased power.

(a) Impact magnitudes are defined in the text of this section.
(b) Refer to Table 2.1-1 for a more detailed presentation of the impacts of operations under the proposed action. These impacts are discussed in detail in Section 4.12.1.
(c) Refer to Section 4.1.3 for a discussion of the impacts of the No-Action Alternative.

2.5 References

10 CFR Part 20. *Code of Federal Regulations*, Title 10, *Energy*, Part 20, "Standards for Protection Against Radiation."

10 CFR Part 51. *Code of Federal Regulations*, Title 10, *Energy,* Part 51, "Environmental Protection Regulations for Domestic Licensing and Related Regulatory Functions."

10 CFR Part 54. *Code of Federal Regulations*, Title 10, *Energy,* Part 54, "Requirements for Renewal of Operating Licenses for Nuclear Power Plants."

40 CFR Part 1508. *Code of Federal Regulations*, Title 40, *Energy*, Part 1508, *Protection of Environment*, "Terminology and Index."

Electric Power Research Institute and Commission for Environmental Cooperation (EPRI and CEC). 2003. *Potential Health and Environmental Impacts Associated with Manufacture and Use of Photovoltaic Cells, Final Report*. Report 1000095, Prepared by Tetra Tech, Inc., Lafayette, California, for EPRI, Palo Alto, California, and CEC, Sacramento, California. (November). Available URL: http://www.energy.ca.gov/pier/final_project_reports/500-04-053.html (Accessed October 26, 2007).

Energy Information Administration (EIA). 2007a. "Annual Energy Outlook 2007 with Projections to 2030." DOE/EIA-0383(2007). Washington, DC. Available URL: http://tonto.eia.doe.gov/FTPROOT/forecasting/0383(2007).pdf. Accessed March 16, 2007.

Energy Information Administration (EIA). 2007b. *Electric Power Annual 2006.* DOE/EIA-0348(2006), U.S. Department of Energy, Washington, D.C. (November). Available URL: http://www.eia.doe.gov/cneaf/electricity/epa/epa_sum.html (Accessed December 6, 2007).

Minerals Management Service (MMS). 2007. *Programmatic Environmental Impact Statement for Alternative Energy Development and Production and Alternate Use of Facilities on the Outer Continental Shelf*, OCS EIS/EA MMS 2007-046, U.S. Department of Interior, Washington, D.C. (October). Available URL: http://ocsenergy.anl.gov/news/index.cfm (Accessed November 8, 2007).

National Renewable Energy Laboratory (NREL). 2006. *Power Technologies Energy Data Book, Fourth Edition*. Technical Report NREL/TP-620-39728, U.S. Department of Energy, Golden, Colorado. (August). Available URL: http://www.nrel.gov/docs/fy06osti/39728.pdf (Accessed October 18, 2007).

Office of Energy Efficiency and Renewable Energy (EERE). 2007. *Information Resources: States with Renewable Portfolio Standards*. U.S. Department of Energy, Washington, D.C. (June). Available URL: http://www.eere.energy.gov/states/maps/renewable_portfolio_states.cfm#chart (Accessed November 14, 2007).

Union of Concerned Scientists (UCS). 2007. *Clean Energy: Environmental Impacts of Renewable Energy Technologies*. Available URL: http://www.ususa.org/clean_energy/renewable_energy_basics/ (Accessed December 17, 2007).

U.S. Nuclear Regulatory Commission (NRC). 1996. *Generic Environmental Impact Statement for License Renewal of Nuclear Plants*. NUREG-1437, Vols. 1 and 2, Office of Nuclear Reactor Regulation, Washington, D.C.

U.S. Nuclear Regulatory Commission (NRC). 2002a. *Generic Environmental Impact Statement on Decommissioning of Nuclear Facilities, Supplement 1, Regarding the Decommissioning of Nuclear Power Reactors*. NUREG-0586, Supplement 1, Vols. 1 and 2, Office of Nuclear Reactor Regulation, Washington, D.C. (November 2002)

U.S. Nuclear Regulatory Commission (NRC). 2002b. *Consolidated NMSS Decommissioning Guidance*. NUREG-1757, Vols. 1 and 2, Washington, D.C.

3. Affected Environment

For purposes of the evaluation in this GEIS revision, the "affected environment" is the environment that currently exists at and around operating U.S. commercial nuclear power plants. Because existing conditions are at least partially the result of past construction and operations at the plants, the impacts of these past and ongoing impacts and how they have shaped the environment are summarized here. The impacts of license renewal that are presented in Section 4 are incremental to these baseline conditions, which include the effects of past and present actions at the plants.

Contents of Chapter 3

- Current nuclear power plant facilities and operations (Section 3.1)
- Existing conditions at operating nuclear power plants (including the impacts of past construction and operational effects) in the following environmental resource areas:
  - Land use and visual resources (Section 3.2)
  - Meteorology, air quality, and noise (Section 3.3)
  - Soils, geology, and seismology (Section 3.4)
  - Hydrology (surface water and groundwater) (Section 3.5)
  - Ecology (Section 3.6)
  - Historic and cultural resources (Section 3.7)
  - Socioeconomics (Section 3.8)
  - Human health (Section 3.9)
  - Environmental justice (Section 3.10)
  - Waste management and pollution prevention (Section 3.11)

3.1 Description of Nuclear Power Plant Facilities and Operations

3.1.1 External Appearance and Settings

Nuclear power plants contain a number of buildings or structures. Among them are containment or reactor building(s), turbine building(s), auxiliary buildings, vent stacks, meteorological tower(s), and cooling systems, particularly cooling towers. A plant site layout also includes large parking areas, security fencing, switchyards, water intake and discharge facilities, and transmission lines (see Section 3.1.6). While reactor, turbine, and auxiliary buildings are often clad or painted in colors that are intended to reduce or mitigate their visual presence, the heights of many of the structures, coupled with red and/or white safety lights, make plants visible from many directions. Typical heights of plant facilities are as follows: reactor buildings are 300 ft (90 m), turbine buildings are 100 ft (30 m), stacks are 300 ft (90 m), meteorological towers are 200 ft (60 m), natural-draft cooling towers are higher than 500 ft

(150 m), and mechanical-draft cooling towers are 100 ft (30 m) tall. In addition, condensation from cooling towers is generally visible for many miles. Transmission line towers are between 70 ft (20 m) and 170 ft (50 m) in height, depending on the voltage being carried.

There are two types of power reactors used in the United States – boiling water reactors (BWRs) and pressurized water reactors (PWRs). All nuclear power plant sites are generally similar in terms of the types of facilities they contain. All plant sites contain a nuclear steam supply system. In addition, there are a number of common structures necessary for plant operation. However, the layout of buildings and structures varies considerably among the sites. For example, control rooms may be located in the auxiliary building, in a separate control building, or in a radwaste and control building. The following list describes typical structures located on most sites.

- Containment or reactor building. The containment or reactor building in a PWR is a massive concrete or steel structure that houses the reactor vessel, reactor coolant piping and pumps, steam generators, pressurizer, pumps, and associated piping. The reactor building structure of a BWR generally includes a containment structure and a shield building. The reactor containment building is a massive concrete or steel structure that houses the reactor vessel, the reactor coolant piping and pumps, and the suppression pool. It is located inside a somewhat less substantive structure called the shield building. The shield building for a BWR also generally contains the spent fuel pool and the new fuel pool.

  The reactor containment building for both PWRs and BWRs is designed to withstand natural disasters, such as tornados, hurricanes, and earthquakes. The containment building's ability to withstand such events and to contain the effects of accidents initiated by system failures constitutes the principal protection against releasing radioactive material to the environment.

- Fuel building. For PWRs, the fuel building has a fuel pool that is used to store and service spent fuel and prepare new fuel for insertion into the reactor. This building is connected to the reactor containment building by a transfer tube or channel that is used to move new fuel into the reactor and move spent fuel out of the reactor for storage.

- Turbine building. The turbine building houses the turbine generators, condenser, feedwater heaters, condensate and feedwater pumps, waste-heat rejection system, pumps, and equipment that support those systems. In BWRs, primary coolant is circulated through these systems, thereby causing them to become slightly contaminated. In PWRs, primary coolant is not circulated through the turbine building systems. However, it is not unusual for portions of the turbine building to become mildly

contaminated because of leaks from the primary system into the secondary side during power generation at PWRs.

- Auxiliary buildings. Auxiliary buildings house support systems, such as the ventilation system, emergency core cooling system, laundry facilities, water treatment system, and waste treatment system. An auxiliary building may also contain the emergency diesel generators and, in some PWRs, the fuel storage facility. The facility's control room is often located in the auxiliary building.

- Diesel generator building. Often a separate building houses the emergency diesel generators if they are not located in the auxiliary building. The emergency diesel generators do not become contaminated or activated.

- Pump houses. Various pump houses for circulating water, standby service water, or makeup water may be onsite.

- Cooling towers. Cooling towers are structures designed to remove excess heat from the condenser without dumping the heat directly into water bodies, such as lakes or rivers. There are two principal types of cooling towers: mechanical draft towers and natural draft towers. Most nuclear plants that have once-through cooling do not have cooling towers associated with them. However, five facilities with once-through cooling also have cooling towers that are used to reduce the temperature of the water before it is released to the environment.

- Radwaste facilities. Radioactive waste facilities may be contained in an auxiliary building or located in a separate solid radwaste building. For example, the radwaste storage facility may be a separate building.

- Ventilation stack. Many older nuclear power plants, particularly BWRs, have ventilation stacks to discharge gaseous waste effluents and ventilation air directly to the outside. These stacks can be 300 ft (90 m) tall or higher and contain monitoring systems to ensure that radioactive gaseous discharges are below fixed release limits. Radioactive gaseous effluents are treated and processed before being discharged out the stack.

- Switchyard and transmission lines. Plant sites also typically contain a large switchyard, where the electric voltage is stepped up and fed into the regional power distribution system. Electricity generated at the plant is carried off the site by transmission lines. Only those transmission lines that connect the plant to the switchyard are considered within the scope of this review. The remaining lines that would remain energized regardless of a decision regarding license renewal are considered outside of the scope of this GEIS review.

- Administrative, training, and security buildings. Normally, the administrative, training, and security buildings are located outside the radiation protection zones; no radiological contamination is present; and radiation exposures are at general background levels.

- Independent spent fuel storage installations (ISFSIs). An ISFSI is designed and constructed for the interim storage of spent nuclear fuel and other radioactive materials associated with spent fuel storage. ISFSIs may be located at the site of a nuclear power plant or at another location. The most common design for an ISFSI, at this time, is a concrete pad with dry casks containing spent fuel bundles. ISFSIs are used by operating plants that require increased spent fuel storage capability because their spent fuel pools have reached capacity (see Section 3.11.1.2).

Nuclear power plant site areas range from 84 ac (34 ha) to 30,000 ac (12,000 ha), with most sites encompassing 500 to 2000 ac (200 to 800 ha). Larger land-use areas are associated with plant cooling systems that include reservoirs, artificial lakes, and buffer areas.

Nuclear power plant sites are located in a range of political jurisdictions, including towns, townships, service districts, counties, parishes, and States. At more than 50 percent of the sites, the population density within a 50-mi (80 km) radius is fewer than 200 persons per square mile (77 persons per square kilometer), and at more than 80 percent of the sites, the density within 50 mi (80 km) is fewer than 500 persons per square mile (193 persons per square kilometer). Within the 50-mi (80-km) radius, State, Federal, and Native American lands are present to various extents. Typically, nuclear plant sites and their surrounding areas consist of flat to rolling countryside in wooded or agricultural areas. See Appendix C for summary descriptions of the characteristics of nuclear power plant sites and their surroundings.

3.1.2 Nuclear Reactor Systems

In the United States, all of the currently operating reactors used for commercial power generation are conventional (thermal) light water reactors (LWRs) that use water as a moderator and coolant. The two types of LWRs are PWRs and BWRs. Of the 104 operating LWRs, 69 are PWRs and 35 are BWRs (Figure 3.1-1 and Table 3.1-1). They are located at 65 sites in 31 States (NRC 2007a). Some of the reactors have undergone power uprates increasing their power levels. Uprate information is incorporated into Table 3.1-1, and other reactors are likely to undergo similar power uprates in the future.

The nuclear fuel used in both types of reactors is uranium enriched to 2 to 5 percent in the uranium-235 isotope. The fuel is in the form of cylindrical uranium dioxide (UO_2) pellets, approximately 0.4 in. (1 cm) in diameter and 0.4 to 0.6 in. (1 to 1.5 cm) in height. The fuel pellets are stacked and sealed inside a hollow cylindrical fuel rod made of zircaloy, an alloy of

Figure 3.1-1. Operating Commercial Nuclear Power Plants in the United States

Table 3.1-1. Characteristics of Operating U.S. Commercial Nuclear Power Plants[a]

Plant	Unit	Year Operating License Granted	Year License Expires	Net Capacity [MW(e)]	Reactor Type[b]	Condenser Flow Rate (10^3 gpm)	Total Site Area (acres)	Nearest City	2000 Population within 50 mi
Arkansas Nuclear One	1	1974	2034	836	PWR	657	1164	Little Rock, AR	267,664
	2	1978	2038	988	PWR	16			
Beaver Valley Power Station	1	1976	2016	849	PWR	480	453	Pittsburgh, PA	3,274,451
	2	1987	2027	832	PWR				
Braidwood Station	1	1987	2027	1178	PWR	730	4457	Joliet, IL	4,272,003
	2	1988	2028	1152	PWR				
Browns Ferry Nuclear Plant	1	1973	2033	1065	BWR	734	840	Huntsville, AL	872,478
	2	1974	2034	1118	BWR				
	3	1976	2036	1114	BWR				
Brunswick Steam Electric Plant	1	1976	2036	938	BWR	675	1200	Wilmington, NC	361,872
	2	1974	2034	937	BWR				
Byron Station	1	1985	2025	1164	PWR	632	1398	Rockford, IL	1,300,282
	2	1987	2027	1136	PWR				
Callaway Plant	1	1984	2024	1190	PWR	530	5228	Columbia, MO	491,072
Calvert Cliffs Nuclear Power Plant	1	1974	2034	873	PWR	1200	2108	Washington, D.C.	3,919,397
	2	1976	2036	862	PWR				
Catawba Nuclear Station	1	1985	2045	1129	PWR	660	391	Charlotte, NC	2,041,465
	2	1986	2046	1129	PWR				
Clinton Power Station	1	1987	2027	1043	BWR	569	14,000	Decatur, IL	789,754
Columbia Generating Station	1	1984	2023	1131	BWR	550	1089	Spokane, WA	360,573
Comanche Peak Steam Electric Station	1	1989	2029	1150	PWR	1030	7669	Fort Worth, TX	1,431,094
	2	1993	2033	1150	PWR				
Cooper Nuclear Station	1	1974	2014	760	BWR	631	1251	Lincoln, NE	156,157
Crystal River Nuclear Power Plant	3	1977	2017	838	PWR	680	4700	Gainesville, FL	1,273,146
Donald C. Cook Nuclear Plant	1	1974	2034	1029	PWR	800	650	South Bend, IN	1,447,303
	2	1977	2037	1077	PWR				

Table 3.1-1. (cont.)

Plant	Unit	Year Operating License Granted	Year License Expires	Net Capacity [MW(e)]	Reactor Type[b]	Condenser Flow Rate (10^3 gpm)	Total Site Area (acres)	Nearest City	2000 Population within 50 mi
Davis-Besse Nuclear Power Station	1	1977	2017	889	PWR	480	733	Toledo, OH	2,617,550
Diablo Canyon Power Plant	1 2	1984 1985	2024 2025	1122 1118	PWR PWR	863	750	Santa Barbara, CA	836,031
Dresden Nuclear Power Station	2 3	1969 1971	2029 2031	867 867	BWR BWR	940 (once-through); 630 (mechanical draft cooling tower)	2500	Joliet, IL	7,337,564
Duane Arnold Energy Center	1	1974	2014	581	BWR	290	500	Cedar Rapids, IA	613,736
Joseph M. Farley Nuclear Plant	1 2	1977 1981	2037 2041	851 860	PWR PWR	635	1850	Columbus, GA	393,639
Enrico Fermi Atomic Power Plant	2	1985	2025	1122	BWR	837	1120	Detroit, MI	7,803,464
James A. FitzPatrick Nuclear Power Plant	1	1974	2014	852	BWR	353	702	Syracuse, NY	914,668
Fort Calhoun Station	1	1973	2033	478	PWR	360	660	Omaha, NE	852,717
R.E. Ginna Nuclear Power Plant		1969	2029	498	PWR	340	488	Rochester, NY	1,250,000
Grand Gulf Nuclear Station	1	1984	2024	1266	BWR	572	2100	Jackson, MS	357,525
Shearon Harris Nuclear Power Plant	1	1987	2027	900	PWR	483	10,744	Raleigh, NC	2,035,797
Edwin I. Hatch Nuclear Plant	1 2	1974 1978	2034 2038	876 883	BWR BWR	556	2240	Savannah, GA	366,508
Hope Creek Generating Station	1	1986	2026	1061	BWR	552	740	Wilmington, DE	5,999,588

Table 3.1-1. (cont.)

Plant	Unit	Year Operating License Granted	Year License Expires	Net Capacity [MW(e)]	Reactor Type[(b)]	Condenser Flow Rate (10^3 gpm)	Total Site Area (acres)	Nearest City	2000 Population within 50 mi
Indian Point Energy Center	2	1973	2013	1020	PWR	840	239	White Plains, NY	17,732,469
	3	1976	2016	1025	PWR				
Kewaunee Power Station		1973	2013	556	PWR	420	900	Green Bay, WI	1,585,415
LaSalle County Station	1	1982	2022	1118	BWR	645	3060	Joliet, IL	1,498,644
	2	1984	2024	1120	BWR				
Limerick Generating Station	1	1985	2025	1134	BWR	450	595	Reading, PA	7,651,537
	2	1990	2030	1134	BWR				
McGuire Nuclear Station	1	1981	2041	1100	PWR	675	577	Charlotte, NC	2,425,097
	2	1983	2043	1100	PWR				
Millstone Power Station	2	1975	2035	882	PWR	523	500	New Haven, CT	2,868,207
	3	1986	2046	1155	PWR	907			
Monticello Nuclear Generating Plant		1970	2030	572	BWR	292	1250	Minneapolis, MN	2,740,995
Nine Mile Point Nuclear Station	1	1968	2028	621	BWR	250	900	Syracuse, NY	914,668
	2	1987	2047	1140	BWR	580			
North Anna Power Station	1	1978	2038	924	PWR	940	1043	Richmond, VA	1,614,983
	2	1980	2040	910	PWR				
Oconee Nuclear Station	1	1973	2033	846	PWR	680	510	Greenville, S.C.	1,226,479
	2	1973	2033	846	PWR				
	3	1974	2034	846	PWR				
Oyster Creek Nuclear Generating Station		1969	2009	619	BWR	115	800	Atlantic City, PA	4,243,462
Palisades Nuclear Plant		1972	2032	778	PWR	98	432	Kalamazoo, MI	1,287,558
Palo Verde Nuclear Generating Station	1	1985	2025	1311	PWR	560	4050	Phoenix, AZ	1,781,095
	2	1986	2026	1314	PWR				
	3	1987	2027	1247	PWR				
Peach Bottom Atomic Power Station	2	1973	2033	1112	BWR	750	620	Lancaster, PA	5,270,600
	3	1974	2034	1112	BWR				

Table 3.1-1. (cont.)

Plant	Unit	Year Operating License Granted	Year License Expires	Net Capacity [MW(e)]	Reactor Type[(b)]	Condenser Flow Rate (10^3 gpm)	Total Site Area (acres)	Nearest City	2000 Population within 50 mi
Perry Nuclear Power Plant	1	1986	2026	1231	BWR	545	1100	Euclid, OH	4,923,662
Pilgrim Nuclear Power Station	1	1972	2012	685	BWR	156	140	Boston, MA	4,629,116
Point Beach Nuclear Plant	1 2	1970 1972	2030 2033	512 514	PWR PWR	350	1260	Green Bay, WI	1,622,052
Prairie Island Nuclear Generating Plant	1 2	1973 1974	2013 2014	551 545	PWR PWR	294	560	Minneapolis, MN	2,731,953
Quad Cities Nuclear Power Station	1 2	1972 1972	2032 2032	867 867	BWR BWR	970	817	Davenport, IA	656,527
River Bend Station	1	1985	2025	967	BWR	508	3300	Baton Rouge, LA	866,314
H.B. Robinson Steam Electric Plant	2	1970	2030	710	PWR	448	6020	Columbia, SC	809,582
St. Lucie Nuclear Plant	1 2	1976 1983	2036 2043	839 839	PWR PWR	491	1130	West Palm Beach, FL	1,180,000
Salem Nuclear Generating Station	1 2	1976 1981	2016 2021	1174 1130	PWR PWR	1,100	700	Wilmington, DE	5,975,864
San Onofre Nuclear Generating Station	2 3 1	1982 1983 1967	2022 2023 2007	1070 1080	PWR PWR	797 797	84	Oceanside, CA	12,404,757
Seabrook Station	1	1990	2032	1244	PWR	399	889	Lawrence, MA	6,932,660
Sequoyah Nuclear Plant	1 2	1980 1981	2020 2021	1150 1127	PWR PWR	522	525	Chattanooga, TN	954,430
South Texas Project Electric Generating Station	1 2	1988 1989	2028 2029	1280 1280	PWR PWR	907	12,350	Galveston, TX	402,902
Virgil C. Summer Nuclear Station	1	1982	2042	966	PWR	485	2245	Columbia, SC	1,032,330
Surry Power Station	1 2	1972 1973	2032 2033	799 799	PWR PWR	840	840	Newport News, VA	2,387,353

Table 3.1-1. (cont.)

Plant	Unit	Year Operating License Granted	Year License Expires	Net Capacity [MW(e)]	Reactor Type[(b)]	Condenser Flow Rate (10^3 gpm)	Total Site Area (acres)	Nearest City	2000 Population within 50 mi
Susquehanna Steam Electric Station	1 2	1982 1984	2022 2024	1135 1140	BWR BWR	968	1173	Wilkes-Barre, PA	1,684,794
Three Mile Island	1	1974	2014	786	PWR	430	814	Harrisburg, PA	2,466,679
Turkey Point Nuclear Plant	3 4	1972 1973	2032 2033	693 693	PWR PWR	624	2400	Miami, FL	7,490,123
Vermont Yankee Nuclear Power Station	1	1973	2013	650	BWR	360	125	Holyoke, MA	1,513,282
Vogtle Electric Generating Plant	1 2	1987 1989	2027 2029	1152 1149	PWR PWR	510	3169	Augusta, GA	670,000
Waterford Steam Electric Station	3	1985	2025	1152	PWR	975	3000	New Orleans, LA	2,072,270
Watts Bar Nuclear Plant	1	1996	2035	1121	PWR	410	1170	Chattanooga, TN	1,044,454
Wolf Creek Generating Station	1	1985	2025	1166	PWR	500	9818	Topeka, KS	176,301

(a) The 1996 GEIS included a number of nuclear plants that are not being considered for license renewal and are not included in this table. They include the following plants:
Bellefonte: Never finished; mothballed in 1988.
Big Rock: Shut down in 1997; decommissioning complete in August 2006. Stored spent fuel is still onsite.
Haddam (Connecticut Yankee): Shut down in 1996; decommissioned in 2004. Stored spent fuel is still onsite.
Maine Yankee: Closed in 1997; decommissioned in 2005. Stored spent fuel is still onsite.
Millstone, Unit 1: Shut down in 1995; awaiting decontamination and dismantlement as part of decommissioning.
Rancho Seco: Shut down in 1989; still undergoing decommissioning.
Shoreham: Fully decommissioned in 1994; it never produced power.
Trojan: Closed in 1992; decommissioning and demolition expected to be complete in 2008. Stored spent fuel is still onsite.
Watts Bar, Unit 2: Construction halted in 1988, but approval to complete construction was approved in August 2007. Construction was to begin in 2007, with operation beginning in 2013.
Yankee Rowe: Shut down in 1992; decommissioning completed in 2006.
Zion: Shut down in 1998, has been placed in safe storage (SAFSTOR), and decommissioning will begin in 2013.

(b) PWR = pressurized-water reactor; BWR = boiling-water reactor.

zirconium. The fuel rods, also called fuel pins or fuel elements, are approximately 12 ft (3.6 m) long. They are bundled into fuel assemblies that generally consist of 15 x 15 or 17 x 17 rods for PWRs and 8 x 8 or 10 x 10 rods for BWRs. When new fuel is loaded into the reactors or spent fuel is removed from reactors, the fuel is handled as intact assemblies. Similarly, when spent fuel is stored onsite awaiting shipment offsite, the fuel assemblies remain intact.

Fission reactions that occur inside the fuel, primarily by the uranium-235 isotopes, are the source of thermal energy generated in a nuclear reactor. This energy is transferred to the coolant, which is ordinary water, circulating in the primary coolant system in LWRs. The vessel, which encloses the reactor, is part of the primary coolant system.

In PWRs, water is heated to a high temperature under pressure inside the reactor (Figure 3.1-2). The water is then pumped in the primary circulation loop to the steam generator. Within the steam generator, water in the secondary circulation loop is converted to steam that drives the turbines. The turbines turn the generator to produce electricity. The steam leaving the turbines is condensed by water in the tertiary loop and returned to the steam generator. The tertiary loop water flows to cooling towers where it is cooled by evaporation, or it is discharged directly to a body of water, such as a river, lake, or other heat sink (see Section 3.1.3). The tertiary loop is open to the atmosphere, but the primary and secondary cooling loops are not.

BWRs generate steam directly within the reactor vessel (Figure 3.1-3). The steam passes through moisture separators and steam dryers and then flows to the turbines. Because it generates steam directly in the reactor vessel, the power generation system contains only two heat transfer loops. The primary loop transports the steam from the reactor vessel directly to the turbines, which generate electricity. The secondary coolant loop removes excess heat from the primary loop in the condenser. From the condenser, the primary condensate proceeds into the feedwater stage, and the secondary coolant loop removes the excess heat and discharges it to the receiving water body. As is the case for PWRs, the coolant water from the condenser is pumped to cooling towers or it is discharged directly to a water body.

3.1.3 Cooling Water Systems

The predominant use of water at a nuclear power plant is for removing excess heat generated in the reactor. The volumetric flow rate of water used for condenser cooling is a function of several factors, including the power rating of the plant and the increase in cooling water temperature from the intake to the discharge. The larger the plant, the greater the quantity of waste heat to be dissipated, and the greater the flow rate of cooling water required.

Table 3.1-2 shows some types of cooling systems used at the existing nuclear power plant sites. There are two major types of cooling systems for operating plants: once-through cooling

and closed-cycle cooling. In a once-through cooling system, circulating water for condenser cooling is obtained from a nearby source of water, such as a lake or river, passed through the condenser tubes, and returned at a higher temperature to the same water body (Figure 3.1-4a).

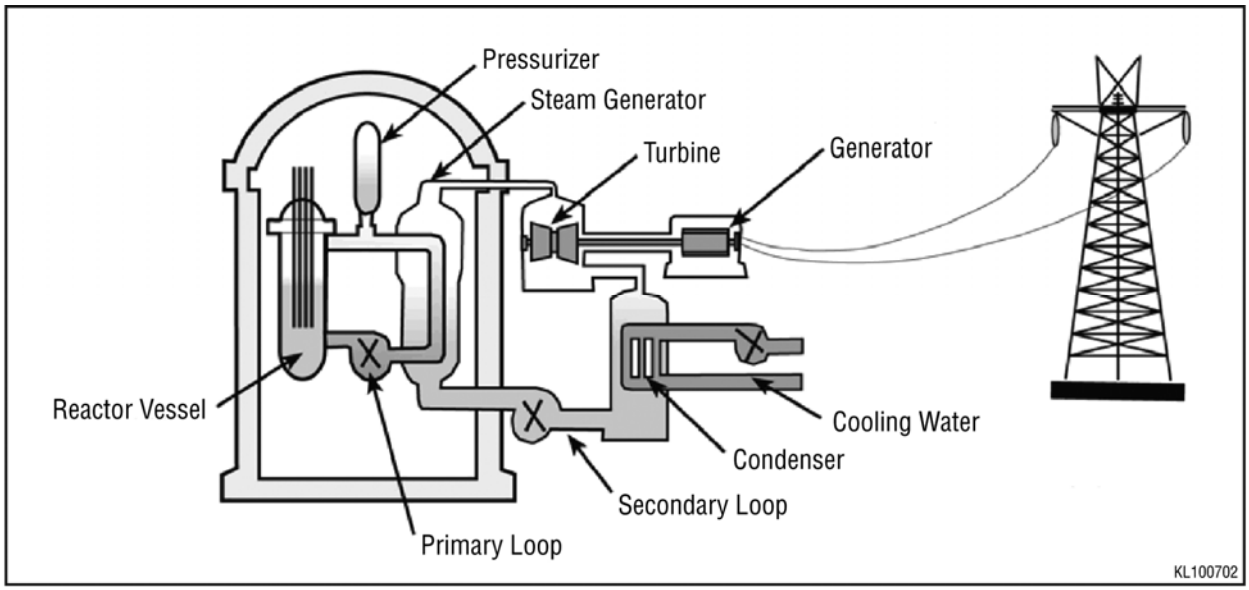

Figure 3.1-2. Pressurized Water Reactor (Source: NRC 2002a)

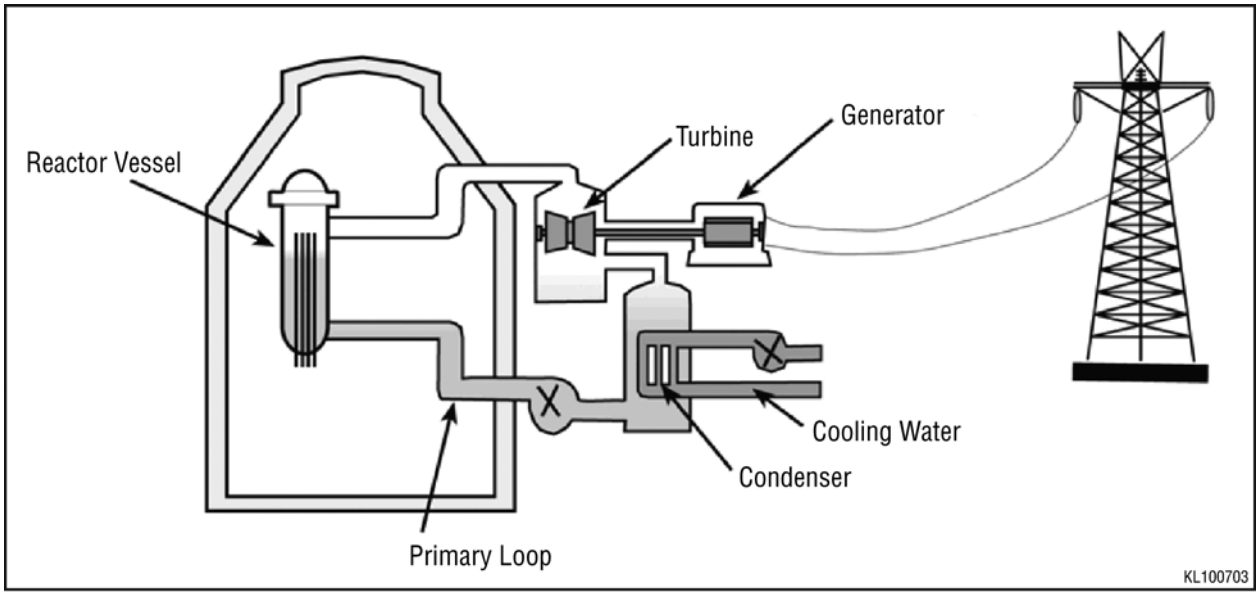

Figure 3.1-3. Boiling Water Reactor (Source: NRC 2002a)

Table 3.1-2. Types of Cooling Systems Used at U.S. Commercial Nuclear Power Plants

Plant	State	Cooling System	Cooling Water Source
Coastal or Estuarine Environment			
Diablo Canyon	California	Once-through	Pacific Ocean
San Onofre Nuclear	California	Once-through	Pacific Ocean
Millstone	Connecticut	Once-through	Long Island Sound
Crystal River	Florida	Once-through	Gulf of Mexico
St. Lucie	Florida	Once-through	Atlantic Ocean
Turkey Point	Florida	Cooling canal	Biscayne Bay
Calvert Cliffs	Maryland	Once-through	Chesapeake Bay
Pilgrim	Massachusetts	Once-through	Cape Cod Bay
Seabrook	New Hampshire	Once-through	Atlantic Ocean
Hope Creek	New Jersey	Natural draft cooling towers	Delaware River
Oyster Creek	New Jersey	Once-through	Barnegat Bay
Salem	New Jersey	Once-through	Delaware River
Indian Point	New York	Once-through	Hudson River
Brunswick	North Carolina	Once-through	Cape Fear River
South Texas	Texas	Closed-cycle cooling pond	Colorado River
Surry	Virginia	Once-through	James River
Great Lakes Environment			
D.C. Cook	Michigan	Once-through	Lake Michigan
Fermi	Michigan	Natural draft cooling towers and cooling pond	Lake Erie
Palisades	Michigan	Mechanical draft cooling towers	Lake Michigan
FitzPatrick	New York	Once-through	Lake Ontario
Ginna	New York	Once-through	Lake Ontario
Nine Mile Point	New York	Unit 1: Once-through Unit 2: Natural draft cooling towers	Lake Ontario
Davis-Besse	Ohio	Natural draft cooling towers	Lake Erie
Perry	Ohio	Natural draft cooling towers	Lake Erie
Kewaunee	Wisconsin	Once-through	Lake Michigan
Point Beach	Wisconsin	Once-through	Lake Michigan

Table 3.1-2. (cont.)

Plant	State	Cooling System	Cooling Water Source
Freshwater Riverine or Impoundment Environment			
Browns Ferry	Alabama	Once-through (helper towers)	Tennessee River
Farley	Alabama	Mechanical draft cooling towers	Chattahoochee River
Palo Verde	Arizona	Mechanical draft cooling towers	Phoenix City Sewage
Arkansas	Arkansas	Unit 1: once-through Unit 2: natural draft cooling towers	Lake Dardanelle
Hatch	Georgia	Mechanical draft cooling towers	Altamaha River
Vogtle	Georgia	Natural draft cooling towers	Savannah River
Braidwood	Illinois	Cooling pond	Kankakee River
Byron	Illinois	Natural draft cooling towers	Rock River
Clinton	Illinois	Once-through (cooling pond)	Salt Creek
Dresden	Illinois	Closed-cycle and once-through (cooling canals, cooling pond, mechanical draft cooling towers)	Kankakee River
LaSalle	Illinois	Cooling pond	Illinois River
Quad Cities	Illinois	Once-through	Mississippi River
Duane Arnold	Iowa	Mechanical draft cooling towers	Cedar River
Wolf Creek	Kansas	Cooling pond	Coffey County Lake
River Bend	Louisiana	Mechanical draft cooling towers	Mississippi River
Waterford	Louisiana	Once-through	Mississippi River
Monticello	Minnesota	Once-through and mechanical draft cooling towers	Mississippi River
Prairie Island	Minnesota	Once-through and mechanical draft cooling towers	Mississippi River
Grand Gulf	Mississippi	Natural draft cooling towers	Mississippi River
Callaway	Missouri	Natural draft cooling towers	Missouri River
Cooper	Nebraska	Once-through	Missouri River
Fort Calhoun	Nebraska	Once-through	Missouri River
Harris	North Carolina	Natural draft cooling towers	Buckhorn Creek
McGuire	North Carolina	Once-through	Lake Norman
Beaver Valley	Pennsylvania	Natural draft cooling towers	Ohio River
Limerick	Pennsylvania	Natural draft cooling towers	Schuylkill River

Table 3.1-2. (cont.)

Plant	State	Cooling System	Cooling Water Source
Peach Bottom	Pennsylvania	Unit 2: Once-through Unit 3: Once-through (mechanical draft cooling towers)	Conowingo Pond
Susquehanna	Pennsylvania	Natural draft cooling towers	Susquehanna River
Three Mile Island	Pennsylvania	Natural draft cooling towers	Susquehanna River
Catawba	South Carolina	Mechanical draft cooling towers	Lake Wylie
Oconee	South Carolina	Once-through	Lake Keowee
H.B. Robinson	South Carolina	Once-through (cooling pond)	Lake Robinson
Summer	South Carolina	Once through (cooling pond)	Monticello Reservoir
Sequoyah	Tennessee	Once-through and natural draft cooling towers	Chickamauga Lake
Watts Bar	Tennessee	Natural draft cooling towers	Chickamauga Lake
Comanche Peak	Texas	Once-through	Squaw Creek Reservoir
Vermont Yankee	Vermont	Once-through and mechanical draft cooling towers	Connecticut River
North Anna	Virginia	Once-through	Lake Anna
Columbia	Washington	Mechanical draft cooling towers	Columbia River

Flow through the condenser for a 1000-MW(e) plant during operations is typically 250,000 to 900,000 gpm (16 to 57 m^3/s) (NRC 1996). The waste heat is dissipated to the atmosphere mainly by evaporation from the water body and, to a much smaller extent, by conduction, convection, and thermal radiation loss.

In a closed-cycle system at an operating plant, the cooling water is recirculated through the condenser after the waste heat is removed by dissipation to the atmosphere, usually by circulating the water through large cooling towers constructed for that purpose (Figure 3.1-4b). The average for makeup water withdrawals for a 1000-MW(e) plant during operations is typically about 14,000 to 18,000 gpm (0.9 to 1.1 m^3/s) (NRC 1996). Recirculating cooling systems consist of natural draft or mechanical draft cooling towers, cooling ponds, lakes, reservoirs, or canals. Because the predominant cooling mechanism associated with closed-cycle systems is evaporation, much of the water used for cooling is consumed and is not returned to the water source. Blowdown (water that is periodically rinsed from the cooling system to remove impurities and sediment that may degrade performance) is typically released to a receiving body of surface water next to the plant.

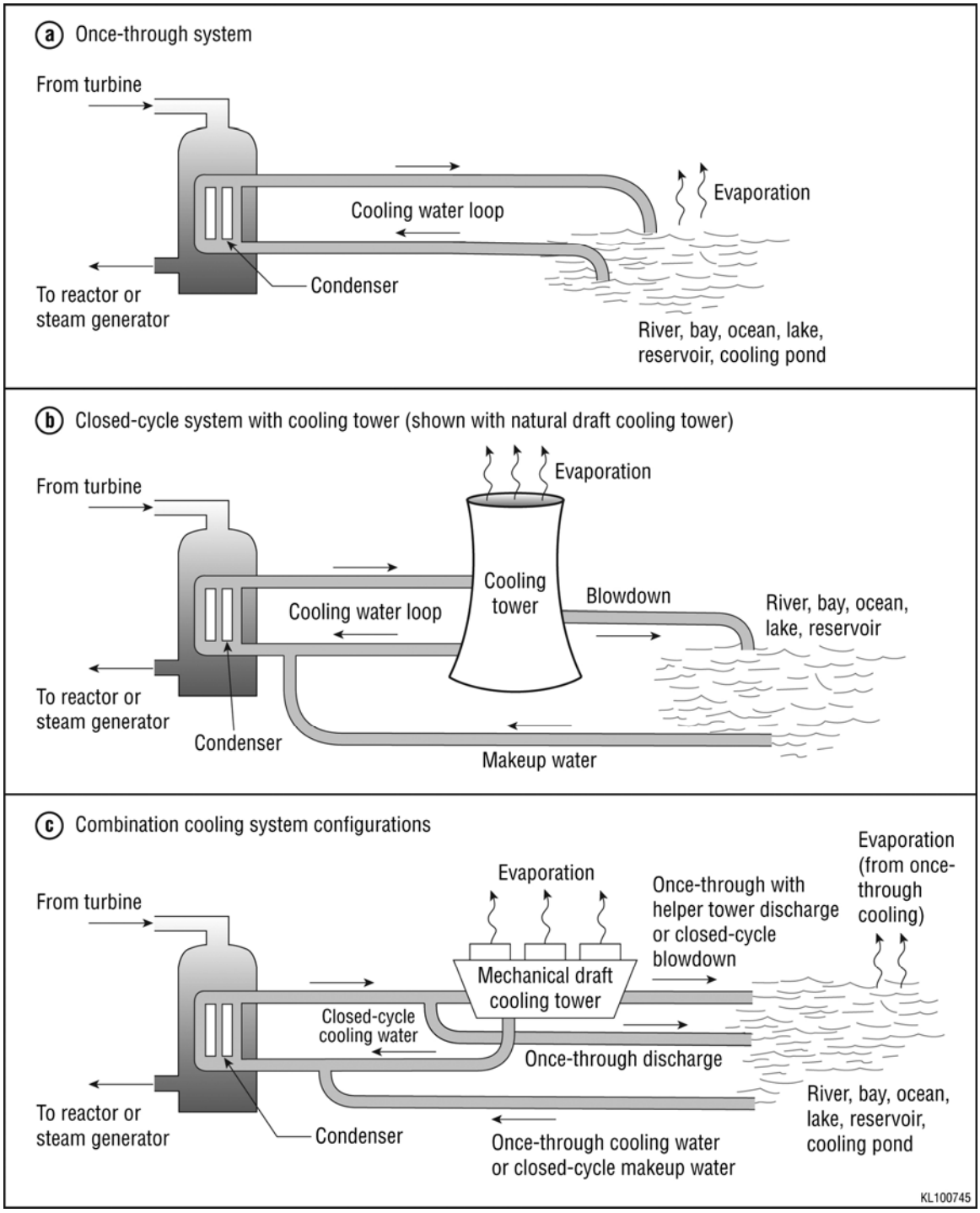

Figure 3.1-4. Schematic Diagrams of Nuclear Power Plant Cooling Systems

Several nuclear plants use combination cooling systems that may be used in different configurations, especially during different times of the year (Figure 3.1-4c). Cooling towers may be included in a once-through system to cool the effluent prior to release to the receiving body of water. These are referred to as helper towers. Peach Bottom (NRC 2003d) has helper mechanical draft cooling towers that can receive up to 60 percent of the heated discharge, with the remainder of the water discharged as part of a traditional once-through system. Monticello (NRC 2006f) uses once-through cooling in the winter but has mechanical draft cooling towers for closed-cycle cooling in the summer. Dresden (NRC 2004a) is similar in that it relies on a closed-cycle cooling pond in the winter but includes the use of helper mechanical draft cooling towers in the summer. Browns Ferry (NRC 2005a) also uses mechanical draft cooling towers in helper mode. Although closed-cycle recirculation of the cooled water is possible, the plant does not expect to use this option. Vermont Yankee (NRC 2007f) is capable of operating in one of three modes: once-through, combined, or completely closed. The mode of operation is selected by the licensee to limit the thermal discharge to the Connecticut River to ensure compliance with the National Pollutant Discharge Elimination System (NPDES) permit requirements. In the combined mode, the plant operates both the closed cycle and the open (once-through) cycle systems, with the proportion of water running through each system varying depending on the temperature increase in the river water due to discharge from the plant.

All existing sites with two or three reactor units use the same cooling system for all units, except for two sites: Arkansas Nuclear One in Arkansas and Nine Mile Point in New York. These two sites use once-through cooling for one unit and closed-cycle for the other. Other cooling system types might be added to existing sites if new units are constructed.

For each type of cooling system, the configurations of the water intake and discharge structures vary to accommodate the source water body and minimize any impact to the aquatic ecosystem. The intake structures generally are located along the shoreline of the body of water and are equipped with fish-protection devices. The discharge structures are usually jets or diffusers and designed to promote rapid mixing of the effluent stream with the receiving body of water. Biocides and other chemicals used for corrosion control and other water treatment purposes are mixed with the condenser cooling water and discharged from the system, with limits on flow, concentrations, and thermal changes authorized by the States under the appropriate NPDES permit.

In addition to removing heat from the reactor of an operating facility, cooling water is also provided to the service water system and to the auxiliary cooling water system. Service water is special-purpose water that may or may not be treated for use. The auxiliary cooling water systems include emergency core cooling systems, the containment spray and cooling system, the emergency feedwater system, the component cooling water system, and the spent fuel pool water systems. The volumetric flow rate of water required for these systems is usually less than 15 percent of the volume required for condenser cooling in once-through cooling. In

closed-cycle cooling, the additional water needed is usually less than 5 percent of that needed for condenser cooling (NRC 1996).

In addition to surface water sources, some nuclear power plants use groundwater as a source for service, makeup, or potable water. Only Grand Gulf uses groundwater as a source of makeup water to the condenser cooling system. This plant employs a Ranney well collection system to draw groundwater from the Mississippi River alluvial aquifer.

3.1.4 Radioactive Waste Management Systems

During the fission process, a large inventory of radioactive fission products builds up within the fuel. Virtually all of the fission products are contained within the fuel pellets. The fuel pellets are enclosed in hollow metal rods (cladding), which are hermetically sealed to further prevent the release of fission products. However, a small fraction of the fission products escape from the fuel rods and contaminate the reactor coolant. The primary system coolant also has radioactive contaminants as a result of neutron activation. The radioactivity in the reactor coolant is the source of liquid, gaseous, and most of the solid radioactive wastes at LWRs. The following sections describe the basic design and operation of PWR and BWR radioactive waste treatment systems.

3.1.4.1 Liquid Radioactive Waste

Radionuclide contaminants in the primary coolant are the source of liquid radioactive waste in LWRs. The specific sources of these wastes, the modes of collection and treatment, and the types and quantities of liquid radioactive wastes released to the environment are similar in many respects in BWRs and PWRs. Accordingly, the following discussion applies to both BWRs and PWRs; distinctions are made only when important differences exist.

Liquid wastes resulting from LWR operation may be placed into the following categories: clean wastes, dirty wastes, detergent wastes, turbine building floor-drain water, and steam generator blowdown (PWRs only). Clean wastes include all liquid wastes with normally low conductivity and variable radioactivity. They consist of reactor-grade water, which is amenable to processing for reuse as reactor coolant makeup water. Clean wastes are collected from equipment leaks and drains, certain valve and pump seal leaks from which water was not collected in the reactor coolant drain tank, and other aerated leakage sources. Dirty wastes include all liquid wastes with moderate conductivity and variable radioactivity that, after processing, may be used as reactor coolant makeup water. Dirty wastes consist of liquid wastes collected in the containment building sump, auxiliary building sumps and drains, laboratory drains, sample station drains, and other floor drains. Detergent wastes consist principally of laundry wastes and personnel and equipment decontamination wastes and normally have low radioactivity. Turbine building floor-drain wastes usually have high

conductivity and a low radionuclide content. In PWRs, steam generator blowdown can have relatively high concentrations of radionuclides, depending on the amount of primary-to-secondary leakage. Following processing, the water may be reused or discharged.

Each of these sources of liquid wastes receives varying degrees and types of treatment before being stored for reuse or discharged to the environment under the site NPDES permit. The extent and types of treatment depend on the chemical content of the waste; to increase the efficiency of waste processing, wastes with similar characteristics are batched before treatment.

Controls for limiting the release of radiological liquid effluents at each plant are described in the facility's Offsite Dose Calculation Manual (ODCM). Controls are based on (1) concentrations of radioactive materials in liquid effluents and projected dose and (2) dose commitments to a member of the public. Concentrations of radioactive material that are allowed to be released in liquid effluents to unrestricted areas are limited to the concentration specified in 10 CFR Part 20, Appendix B, Table 2.

The degree of processing, storing, and recycling of liquid radioactive waste has steadily increased among operating plants. For example, extensive recycling of steam generator blowdown in PWRs is now the typical mode of operation, and secondary side wastewater is routinely treated. In addition, the plant systems that process wastes are often augmented by commercial mobile processing systems. As a result, radionuclide releases in liquid effluent from LWRs have generally declined for most plants or remained the same over time.

3.1.4.2 Gaseous Radioactive Waste

The gaseous waste management system collects fission products, mainly noble gases, which accumulate in the primary coolant. A small portion of the primary coolant flow is continually diverted to the primary coolant purification, volume, and chemical control system to remove contaminants and adjust the coolant chemistry and volume. During this process, noncondensable gases are stripped and routed to the gaseous waste management system, which consists of a series of gas storage tanks. The storage tanks allow the short-half-life radioactive gases to decay, leaving only relatively small quantities of long-half-life radionuclides to be released to the atmosphere. Some LWRs currently use charcoal delay systems rather than gas storage tanks.

For BWRs, the sources of routine radioactive gaseous emissions to the atmosphere are the air ejector, which removes noncondensable gases from the coolant to improve power conversion efficiency, and gaseous and vapor leakages, which, after monitoring and filtering, are discharged to the atmosphere via the building ventilation systems.

PWRs have three primary sources of gaseous radioactive emissions: (1) discharges from the gaseous waste management system; (2) discharges associated with the exhaust of noncondensable gases at the main condenser if a primary-to-secondary system leak exists; and (3) radioactive gaseous discharges from the building ventilation exhaust, including the reactor building, reactor auxiliary building, and fuel-handling building.

The quantities of gaseous effluents released from operating plants are controlled by the administrative limits that are defined in the ODCM, which is specific for each plant. Controls are based on (1) dose rates to a member of the public and (2) dose commitments to a member of the public. The limits in the ODCM are designed to provide reasonable assurance that radioactive material discharged in gaseous effluents are not in excess of the limits specified in 10 CFR Part 20, Appendix B, thereby limiting the exposure of a member of the public in an unrestricted area.

3.1.4.3 Solid Radioactive Waste

Solid low-level radioactive waste (LLW) from nuclear power plants is generated from the removal of radionuclides from liquid waste streams, filtration of airborne gaseous emissions, and removal of contaminated material from various reactor areas. Liquid contaminated with radionuclides comes from primary and secondary coolant systems, spent fuel pools, decontaminated wastewater, and laboratory operations.

Solid waste is packaged in containers to meet the applicable requirements of 49 CFR Parts 171 through 177. Disposal and transportation are performed in accordance with the applicable requirements of 10 CFR Part 61 and 10 CFR Part 71, respectively.

Solid radioactive waste generated during operations is shipped to a LLW processor or directly to a LLW disposal site. Volume reduction may occur both onsite and offsite. The most common onsite volume reduction techniques are high-pressure compacting in waste drums, dewatering and evaporating wet wastes, monitoring waste streams to segregate wastes, and sorting. Offsite waste management vendors compact wastes at ultra-high pressures, incinerate dry active waste, separate and incinerate oily and organic wastes, and concrete-solidify resins and sludges before the waste is sent to a LLW disposal site.

Spent fuel contains fission products and actinides produced when nuclear fuel is irradiated in reactors, as well as any unburned, unfissioned nuclear fuel remaining after the fuel rods have been removed from the reactor core. Currently in the United States, the spent fuel is considered waste and is being stored at the reactor sites, either in spent fuel pools or dry storage facilities, also called ISFSIs, awaiting the opening of the nation's first high-level waste (HLW) geologic repository (see Section 3.11.1.2).

Mixed wastes, which contain both radioactive and hazardous components, are generally accumulated in designated areas onsite and then shipped offsite for treatment and disposal. Mixed wastes are regulated both by the U.S. Environmental Protection Agency (EPA) or the State under authority granted by the Resource Conservation and Recovery Act (RCRA) and by the NRC or the State under authority granted by the Atomic Energy Act (see Section 3.11.3).

3.1.5 Nonradioactive Waste Management Systems

Nonradioactive wastes from nuclear power plants include both hazardous and nonhazardous wastes. Hazardous wastes, as defined by RCRA Subtitle C, may include organic materials, heavy metals, solvents, paints, cutting fluids, and lubricating oils that have been used at a nuclear power plant, and, after use, declared to be waste. These wastes are generally accumulated in designated areas onsite and then shipped offsite for treatment and disposal. Certain hazardous waste streams may receive treatment at some sites. For example, waste oil is incinerated at some sites. Common treatment methods for these nonradioactive wastes include incineration, neutralization, biological treatment, and removal and recovery. All activities related to hazardous wastes – including storage, treatment, shipment, and disposal – are conducted pursuant to permits issued by the EPA or the State, if authorized, per the regulations issued under RCRA (see Section 3.11.2).

There are also some routine or nonroutine releases from power plants that may have hazardous components, including boiler blowdown (continual or periodic purging of impurities from plant boilers), water treatment wastes (sludges and high-saline streams whose residues are disposed of as solid waste and biocides), boiler metal cleaning wastes, floor and yard drains, and stormwater runoff. Principal chemical and biocide waste sources include the following:

- Boric acid used to control reactor power and lithium hydroxide used to control pH in the coolant. These chemicals could be inadvertently released because of pipe or steam generator leakage.

- Sulfuric acid, which is added to the circulating water system to control scale.

- Hydrazine, which is used for corrosion control. It is released in steam generator blowdown.

- Sodium hydroxide and sulfuric acid, which are used to regenerate resins. These are discharged after neutralization.

- Phosphate in cleaning solutions.

- Biocides used for condenser defouling.

Other small volumes of wastewater are released from other plant systems depending on the design of each plant. These are discharged from such sources as the service water and auxiliary cooling systems, laboratory and sampling wastes, and metal treatment wastes. These waste streams are discharged as separate point sources or are combined with the cooling water discharges.

Nonradioactive and nonhazardous wastes such as office trash are picked up by a local waste hauler and sent to a local landfill without any treatment. Sanitary wastes are treated at a sewage treatment plant that is located either onsite or offsite. If the treatment plant is offsite, the sanitary waste is collected in underground tanks, tested for radioactivity, and sent offsite periodically. Any releases to surface water from onsite sewage plants are subject to NPDES permit limits.

3.1.6 Utility and Transportation Infrastructure

The utility and transportation infrastructure at nuclear power plants typically interfaces with public infrastructure systems available in the region. This infrastructure includes utilities, such as suppliers of electricity, fuel, and water, as well as roads and railroads used to gain access to the sites.

3.1.6.1 Electricity

Nuclear power plants generate electricity for other users; however, they also use electricity to operate. The amount of electrical power needed to run a 1000-MW(e) nuclear power plant is relatively small when compared to the amount it generates. The plants use some of the power they generate; however, they also have connections to the electrical grid system to receive power from offsite sources. Offsite power is provided to run the engineered safety features and emergency equipment in case of a malfunction and interruption of power generation at the plant. The plants also have independent backup generators that run on diesel fuel. The backup generators are tested periodically and come on line automatically in case electrical power to the plant from internal generation and external sources is interrupted.

3.1.6.2 Fuel

An operating 1000-MW(e) PWR contains approximately 220,000 lb (100 MT) of nuclear fuel in the form of UO_2 at any one time. Only about one-third of that fuel is replaced at every refueling. Assuming that the reactor is refueled once every 18 months, the amount of nuclear fuel needed

(and also spent fuel generated) would be roughly 44,000 lb (20 MT) per year. Fresh fuel is brought to the site and stored at the site until needed.

In addition to nuclear fuel, a nuclear power plant needs a certain amount of diesel fuel to operate the emergency diesel power generators. To meet emergency demands, a certain quantity of diesel fuel is stockpiled on site in fuel storage tanks. Fuel is also needed for space heating, ventilating, and air conditioning (HVAC) purposes. Plants use a variety of energy sources for HVAC, including electricity, natural gas, or fuel oil. Some plants have waste oil incinerators onsite to burn their used oil. The heat generated by such an incinerator is used to heat buildings during winter.

3.1.6.3 Water

Systems designed to provide cooling water at nuclear power plants are described in Section 3.1.3. In addition to needing water for cooling, plants need water for sanitary reasons and for everyday use by the personnel (e.g., drinking, showering, cleaning, laundry, toilets, and eye washes). Plants generally rely on groundwater or, at times, on surface water bodies (e.g., nearby rivers and lakes) to obtain potable water. Because the plants are generally in rural areas away from population centers, they are often not connected to community water systems and are self-sufficient in meeting their water needs.

The quantity of water needed for cooling purposes was discussed in Section 3.1.3. The amount of water needed for sanitary reasons is generally much smaller than the amount needed for cooling. After use, the potable water is processed as part of the sanitary water treatment system. As described in Section 3.11.4, sanitary waste is either treated onsite or collected in underground tanks and then shipped offsite to be treated at a local sewage treatment plant.

3.1.6.4 Transportation Systems

All nuclear power plants are served by controlled access roads. In addition to the roads, many of the plants also have railroad connections for moving heavy equipment and other materials. Some of the plants that are located on navigable waters, such as rivers, Great Lakes, or oceans, have facilities to receive and ship loads on barges.

Trucks are the most common mode of transportation for delivering materials to and from the sites. Deliveries are accepted at and shipments are made from designated areas on the sites under controlled conditions and by following established procedures. Workers generally use their personal vehicles to commute to work. Visitors use passenger cars or light pickup trucks to get to and from the sites. There are parking areas available on every site for workers and

visitors. There is also a network of roads and sidewalks for vehicles and pedestrians on each site.

3.1.6.5 Power Transmission System

Each nuclear power plant is connected to the regional electrical grid. Power-transmission systems associated with nuclear power plants and considered within the scope of this review consist of switching stations (or substations) usually located on the plant site and the transmission lines that connect the plant to those substations. These systems are required to transfer power from the plant to the utility's network of power lines in its service area (the regional electrical distribution grid).

The final environmental statements (FESs) prepared for the original plant construction and operation licensing actions evaluated the impacts of those transmission lines built to connect the nuclear power plant to the regional electrical grid. Since the original construction of those lines, regional expansion of the electrical distribution grid has resulted in incorporation of those lines originating at the power plant substations. In most cases, the transmission lines originating at the power plant substations are no longer owned or managed by the nuclear power plant licensees. These lines would remain in place and energized regardless of a decision concerning license renewal. For this reason, the lines whose existences no longer depend on a license renewal decision are considered outside of the scope of the GEIS revision. It should be noted that this is a departure from the treatment in the *Generic Environmental Impact Statement for License Renewal of Nuclear Plants* (GEIS), NUREG-1437 (1996 GEIS)[(a)] (NRC 1996) and the SEISs prepared to date. Those reviews considered the transmission lines originally constructed to connect the plant to the grid.

Switching stations transfer power from generating sources to power lines and regulate the operation of the power system. Transformers in switching stations convert the generated voltage to voltage levels appropriate for the power lines. Equipment for regulating system operation includes switches, power circuit breakers, meters, relays, microwave communication equipment, capacitors, and a variety of other electrical equipment. This equipment meters and controls power flow; improves the performance characteristics of the generated power; and protects generating equipment from short circuits, lightning strikes, and switching surges that may occur along the power lines. Switching stations occupy onsite areas generally two to four times as large as areas occupied by reactor and generator buildings, but they are generally not as visible as other plant structures.

(a) Any reference in this document to the 1996 GEIS (NUREG-1437; NRC 1996) includes the two-volume set published in 1996 and Addendum 1 to the GEIS published in 1999.

3.1.7 Nuclear Power Plant Operations and Maintenance

Nuclear power reactors are capable of generating electricity continuously for long periods of time. However, they operate neither at maximum capacity nor continuously for the entire term of their license. Plants can typically operate continuously for periods of time ranging from 1 year to 2 years on a single fuel load.

Maintenance activities are routinely performed on systems and components to help ensure the safe and reliable operation of the plant. In addition, inspection, testing, and surveillance activities are conducted throughout the operational life of a nuclear power plant to maintain the current licensing basis of the plant and ensure compliance with Federal, State, and local requirements regarding the environment and public safety.

Nuclear power plants must periodically discontinue the production of electricity for refueling, periodic in-service inspection (ISI), and scheduled maintenance. Refueling cycles occur approximately every 12 to 24 months. The duration of a refueling outage is typically about 1 to 2 months. Enhanced or expanded inspection and surveillance activities are typically performed at 5- and 10-year intervals. These enhanced inspections are performed to comply with NRC and/or industry standards or requirements, such as the American Society of Mechanical Engineers Boiler and Pressure Vessel Code. Five-year ISIs are scheduled for the 5th, 15th, 25th, and 35th years of operation, and 10-year ISIs are performed in the 10th, 20th, and 30th years. For economic reasons, many of these activities are conducted simultaneously (e.g., refueling activities typically coincide with the ISI and maintenance activities).

Many plants also undertake various major refurbishment activities during their operational lives. These activities are performed to ensure both that the plant can be operated safely and that the capacity and reliability of the plant remain at acceptable levels. Typical major refurbishments that have occurred in the past include replacing PWR steam generators, reactor vessel heads, BWR recirculation piping, and rebuilding main steam turbine stages. The need to perform major refurbishments is plant-specific and depends on factors such as design features, operational history, and construction and fabrication details. The plants may remain out of service for extended periods of time several months while these major refurbishments are made. Outage durations vary considerably, depending on factors such as the scope of the repairs or modifications undertaken, the effectiveness of the outage planning, and the availability of replacement parts and components.

Each nuclear power plant is part of a utility system that may own several nuclear power plants, fossil-fired plants, or other means of generating electricity. An onsite staff is responsible for the actual operation of each plant, and an offsite staff may be headquartered at the plant site or some other location. Typically, 800 to 2300 people are employed at nuclear power plant sites during periods of normal operation, depending on the number of operating reactors located at a

particular site. The permanent onsite workforce is usually in the range of 600 to 800 people per reactor unit. However, during outage periods, the onsite workforce typically increases by 200 to 900 additional workers. The additional workers include engineering support staff, technicians, specialty crafts persons, and laborers called in both to perform specialized repairs, maintenance, tests, and inspections, and to assist the permanent staff with the more routine activities carried out during plant outages.

3.2 Land Use and Visual Resources

3.2.1 Land Use

Nuclear power plants are large industrial complexes with land requirements generally amounting to 100 to 125 ac (40 to 50 ha) for the reactor containment building, auxiliary buildings, cooling system structures, administration and training offices, and other facilities (e.g., switchyards, security facilities, and parking lots). Areas disturbed during construction of the power plant generally have been returned to prior uses or were ecologically restored when construction ended. Site areas range from 84 ac (34 ha) for the San Onofre plant in California to 14,000 ac (5700 ha) for the Clinton plant in Illinois (Table 3.1-1). Almost 60 percent of plant sites encompass 500 to 2000 ac (200 to 800 ha), with 28 site areas ranging from 500 to 1000 ac (200 to 400 ha) and an additional 12 sites encompassing 1000 to 2000 ac (400 to 800 ha). Larger land areas are often associated with elaborate man-made closed-cycle cooling systems that include cooling lagoons, spray canals, reservoirs, artificial lakes, and buffer areas.

While many utilities use the land for the sole purpose of generating electricity, other utilities allow other uses for the land. Some sites lease land for agricultural and forestry production, promote their ecology nature centers and preservation areas, allow recreational use, and permit cemetery and historical site access. Most sites have closed their visitor centers as a result of security concerns after September 11, 2001. Sites have improved their security fencing, altered their landscaping to enhance visibility from the plant, reduced site access, and increased signage detailing site access and restrictions. Some sites have constructed onsite dry cask storage facilities for spent fuel.

The land cover and land use percentages at each site depend on the total site area and amount of land required for electricity generation. Land cover on sites is often designated within the land use “resource-oriented” classification system, which includes urban or built-up land, agricultural land (e.g., cropland, pasture, orchards, nurseries, fields, and fallow lands), rangeland, forest land, water, wetland (e.g., marshes and swamps), and barren land (e.g., beaches and gravel pits). Land cover designations at other sites use visually descriptive categories that include open areas (e.g., fields, cemeteries), forested areas, scrub forest,

deciduous forest, hardwood forest, beach, wetlands, open water (e.g., ponds, streams, lakes, and canals), natural lands, recreational lands, and parking areas.

Land use within transmission line rights-of-way (ROWs) is both precluded and restricted under the easement rights acquired by the utility from private landowners or from local, State, or Federal governments. Land use within cleared ROWs often, but not always, differs from that in adjacent areas. Land cover within ROWs is managed through a variety of oversight and maintenance procedures so that vegetation growth and building construction do not interfere with power line operation and access. Land use within ROWs is limited to activities that do not endanger line operation and can include recreation, off-road vehicle use, grazing, agricultural cultivation, irrigation, recreation, roads, and environmental conservation and wildlife areas.

One of the siting criteria for nuclear power plant sites was access to rail or water transport so that rail or barge deliveries of reactor vessels and other large operating equipment could be received. The rail spurs and barge docking facilities still remain at many sites and are used occasionally. Because of the large number of workers commuting daily to and from the site, a quality road network connecting the site to urban locations was and continues to be essential.

Information on land cover within 5 mi (8 km) of commercial nuclear power plants is summarized in Table 3.2-1. The land cover types in the vicinity of each plant site are presented in Table D.1-1 in Section D.1 of Appendix D. For all NRC regions, most of the cover near plants is undeveloped land, agricultural land, or open water. There are differences in land use and land cover in the four NRC regions. In Region I (Northeast) and Region II (Southeast), more than two-thirds of the area surrounding most plants is open water, forest, and wetlands. Region III (northern Midwest) plants are mostly surrounded (80 percent) by agricultural land, open water, and forests. In Region IV (West and Southern Midwest), plants are surrounded (77 percent) by agricultural land, shrub/scrub land, forests, herbaceous cover, and wetland.

Section 307(c)(3)(A) of the Coastal Zone Management Act of 1972 (16 USC 1456) requires that applicants for Federal licenses certify that the proposed activity in a coastal zone or coastal watershed boundary, as defined by each State participating in the National Coastal Zone Management Program, is consistent with the enforceable policies of that State's Coastal Zone Management Program. States define their coastal zone boundaries by using a variety of parameters, such as the entire State, county or county-equivalent boundaries, political features (e.g., town boundaries), and geographic features (adjacency to tidal waters). Licensees must coordinate with the State agency that manages the State Coastal Zone Management Program, which is a voluntary Federal-State program that oversees the compatibility certification process for Federal projects within coastal zones.

Table 3.2-1. Land Cover Within a 5-Mile Radius of U.S. Commercial Nuclear Power Plants

Land Cover Classes	Percent of Land Cover Type in NRC Region				
	Region I	Region II	Region III	Region IV	Overall
Open water	31.7	20.6	24.6	14.9	23.0
Undeveloped land					
Barren land	0.7	0.7	0.3	0.3	0.5
Forest (deciduous, evergreen, and mixed)	30.6	35.9	14.6	13.3	23.6
Wetlands	8.4	13.4	5.9	10.3	9.5
Herbaceous	0.3	5.4	3.7	11.5	5.2
Shrub/scrub	0.8	2.3	0.2	18.3	5.4
Total undeveloped land	40.8	57.7	24.7	53.7	44.2
Developed land					
Agriculture (cultivated crops and hay/pasture)	15.6	14.2	40.4	23.7	23.5
Developed open space	5.2	4.9	5.0	3.6	4.7
Low- to high-density developed land	6.7	2.7	5.2	4.0	4.7
Total developed land	27.5	21.8	50.6	31.3	32.9
Total	100	100	100	100	100

Source: USGS 2007

The population densities in the vicinity of nuclear plants and the distances of plants from a medium- or large-sized metropolitan center vary among sites. Most sites are not very remote (i.e., they are not more than about 20 mi (32 km) from a community of 25,000 people or 50 mi (80 km) from a community of 100,000 people). During the period from 1960 to 1980, with utility and local government activities actively encouraging growth (Metz 1983), commercial, industrial, recreational, and industrial land uses tended to expand in the 10-mi (16-km) radius around nuclear plants at the expense of agriculture. New major highways, expanded municipal services, proximity to major urban areas, recreation facilities, and low taxes are indirect factors that promoted population and industrial growth. In some instances, the roads and water lines built for plant purposes encouraged area growth because they were available for other users. In many communities, recent changes in the legislation and tax codes on electricity generation in several States have resulted in significant reductions in the tax revenue stream from nuclear power plants.

Some form of land use control exists in nearly every local jurisdiction that adopted a comprehensive land use or master plan to control residential and commercial developments and preserve shrinking agriculture areas. A specific prohibition on particular land uses in the vicinity of a plant was adopted in only in one percent of the 43 plant sites surveyed (Metz 1983).

For example, in 1976, New Jersey imposed a three-year moratorium on large-scale residential developments within 4 mi (6 km) of the Oyster Creek plant and within 6 mi (10 km) of the larger Salem plant. Some communities enacted laws to specifically regulate land use density around nuclear power plants (e.g., in recognition of natural resources, infrastructure constraints, or the population's generally anti-growth attitude since the 1940s). An inadvertent buffering of the Crystal River plant in Florida was caused by the host county's industrial zoning around two contiguous large coal-fired power plants that excluded residential development.

The residential settlement patterns of nuclear power plant workers are well established. Area population-driven and tax-driven indirect impacts on land use development have occurred in local jurisdictions and service districts that receive tax payments from the owners of the nuclear power plant. The manner in which offsite land use has changed during plant operations has been directly related to the influence of tax payments to the communities' total tax revenue and the controls and plans approved and enacted to steer and manage growth and land use changes. A case study of land use changes that resulted from the operation of seven nuclear power plants that was conducted for the 1996 GEIS determined that impacts were small at two sites, moderate at four sites, and significant at one site depending on the local jurisdiction's ability to provide the public services necessary to support substantial industrial development. Impacts at the Wolf Creek plant in Kansas were determined to be potentially significant if the plant was shut down. Property tax payments allowed host Coffey County to lower its property taxes and upgrade its provision of municipal services as well as purchase industrial buildings and machinery. The county was able to lease them back at a discount on a lease-purchase basis, thereby successfully encouraging industrial and commercial development in the area (NRC 1996).

3.2.2 Visual Resources

Aesthetic resources are related to physical elements that represent pleasing sensory stimuli and include natural and man-made landscapes and the ways in which the two are integrated. Nuclear power plants – particularly those with natural draft cooling towers – stand out from their backgrounds. Their site features (Section 3.1.1) are often visible from neighborhoods, roads, and recreation-based water bodies over a wide area. While plant structures can be visible from as far away as 10 mi (16 km), most structures are typically partially obscured because of the large size (distance) of the site and by changes in site topography, buildings next to the site, and vegetation. Cooling towers at a site can draw attention to the plant's existence because vapor plumes can rise more than 5000 ft (1500 m) above the towers and can extend as much

as 9 mi (14 km) downwind. These plumes, although visible only under certain meteorological and seasonal conditions, extend the plant-related viewshed considerably beyond that of a tower alone.

During the current operating license term, most nuclear power plants have employed a variety of mitigation measures to decrease the visual intrusion of plant structures, including the choice of exterior cladding and paint colors to blend with surroundings, use of nonreflective surfaces, strategic placement of tree plantings and landscaping, and structure placement. In some instances, as a result of security requirements, landscaping was reduced and exterior lighting was increased. Federal regulations require that tall structures, including reactor containment buildings, cooling towers, stacks, and meteorological towers, be fitted with arrays of lights to alert aircraft pilots of their presence. Often these structures can be visible for miles away, depending on the amount of topographic and vegetation screening.

Because nuclear power plants are frequently sited near water bodies, views of the facilities and their associated transmission lines often intrude into recreational, historic, or scenic areas. To date, most of the visual impact from transmission lines has been associated with crossings of rivers, wetlands, wildlife areas, roads, lakes, cemeteries, and battlefields. Various design, engineering, siting, construction, and metallic surface treatments have been used to mitigate these conflicts.

3.3 Meteorology, Air Quality, and Noise

3.3.1 Meteorology and Climatology

The NRC requires that basic meteorological information be available for use in assessing (1) the environmental effects of radiological and nonradiological emissions and effluents resulting from the construction or operation of a nuclear power plant and (2) the benefits of design alternatives. All nuclear power plants in the United States have a required onsite meteorological monitoring program to provide the data needed to determine dispersion conditions in the vicinity of the plant for assessment of safety and environmental factors. These data are used with air dispersion models to assess and protect public health, safety, and property during plant operations (NRC 2007b).

The most recent update to NRC Regulatory Guide 1.23, which covers meteorological monitoring programs for nuclear power plants, provides new guidance for onsite meteorological measurements at stationary licensed power reactors. The guidance covers the siting of instruments to provide representative measures at plant sites, the accuracy and range of specified measured parameters, and special considerations for plants located near influences

of complex terrain (e.g., coastal areas, hills of significant grade or valleys), among other criteria and specifications.

Onsite meteorological conditions at commercial nuclear power plants are monitored at primary fixed meteorological towers with instrumentation at two levels (e.g., 10 and 60 m), and, if necessary, one additional higher level on the tower to better represent dispersion of elevated releases from stacks. A secondary onsite tower is typical at many installations as a backup if primary tower measures fail. Basic meteorological measurements from tower instruments at these levels include: (1) wind speed and direction from at least two levels, (2) temperature for an ambient reading at 10 m (33 ft) and to determine deltas or change with height, and (3) precipitation, which is typically measured near ground level by the tower base. Supplemental measures can include moisture at 10 m (33 ft), and, if applicable, incoming solar and net radiation, barometric pressure, soil temperature, and moisture at the top of the cooling tower. Atmospheric stability is determined from temperature differences at the two lowest levels on the tower. If a backup tower is present, measurements include wind speed and direction and horizontal wind direction variation, usually taken at one level.

Weather conditions at each of the plants can be quite variable depending on the year, season, time of day, and site-specific conditions, such as whether the site is near coastal zones or located in or near terrain with complex features (e.g., steep slopes, ravines, valleys). These conditions can be generally described by climate zones according to average temperatures. On the basis of temperature alone, there are three major climate zones: polar, temperate, and tropical. Within each of the three major climate zones, there are marine and continental climates. Areas near an ocean or other large body of water have a marine climate. Areas located within a large landmass have a continental climate. Typically, areas with a marine climate receive more precipitation and have a more moderate climate. A continental climate has less precipitation and a greater range in climate. Regional or localized refinements in climate descriptions and assessments can be made by considering other important climate variables and climate-influencing geographic variables, such as precipitation, humidity, surface roughness, proximity to oceans or large lakes, soil moisture, albedo, snow cover, and associated linkages and feedback mechanisms. Localized microclimates can be defined by considering factors such as urban latent and sensible heat flux and building-generated turbulence. Both national and regional maximum and minimum average annual temperature and precipitation climatologies over the 30 years from 1971 through 2000 are summarized in Section D.2 in Appendix D.

The intensities of historical tornado events are recorded and archived by the National Climatic Data Center (NCDC) (NOAA 2007). Table 3.3-1 provides the current enhanced Fujita (EF) scale next to the original Fujita (F) scale, adjusted to represent peak winds averaged over 3 seconds, which are used to identify a tornado event's intensity. The number of recorded tornado events or strikes having intensities greater than or equal to EF2 (wind speeds ranging

from 111 to 135 miles per hour or mph (50 to 60 m/s), with 3-second gusts, EF scale) in the three regions (Western, Central, and Eastern) of the continental United States over approximately the last 50 years (1950 through August 2003) are shown in Figure 3.3-1. The size of each square in the figure is 1 degree of latitude per side and represents an area of approximately 5000 mi^2. The EF scale (Texas Tech University 2006) is based on the highest wind speed estimated in the tornado path with maximum 3-second average wind gusts within the range specified for each EF intensity level. The range in damage to structures in the EF2 through EF5 range is described as considerable to incredible, and the damage depends highly on the building's structural design. Computer programs were used to analyze NCDC data, and tornado strike probabilities were estimated for the three U.S. regions: Western, Central, and Eastern (NRC 2006a). The expected value structure strike probabilities were estimated to range from 1.7 chances of a strike in 100,000 tornado events in the Western region to s35.8 chances in 100,000 in the Central region. Figure 3.3-2 provides estimates of the expected maximum tornado wind speeds with a 1 in 100,000 chance of occurrence. Approximately 48 percent of the rated licensed reactor capacity is located in the Eastern region, 41 percent is in the Central region, and 11 percent is in the Western region.

Table 3.3-1. Fujita Tornado Intensity Scale

Intensity	Description of Damage	Original Fujita Scale (3-s gust) (mph)	Operational Enhanced Fujita Scale (3-s gust) (mph)
F0/EF0	Light	45 to 78	65 to 85
F1/EF1	Moderate	79 to 117	86 to 110
F2/EF2	Considerable	118 to 161	111 to 135
F3/EF3	Severe	162 to 209	136 to 165
F4/EF4	Devastating	210 to 261	166 to 200
F5/EF5	Incredible	262 to 31	>200

Source: Texas Tech University 2006

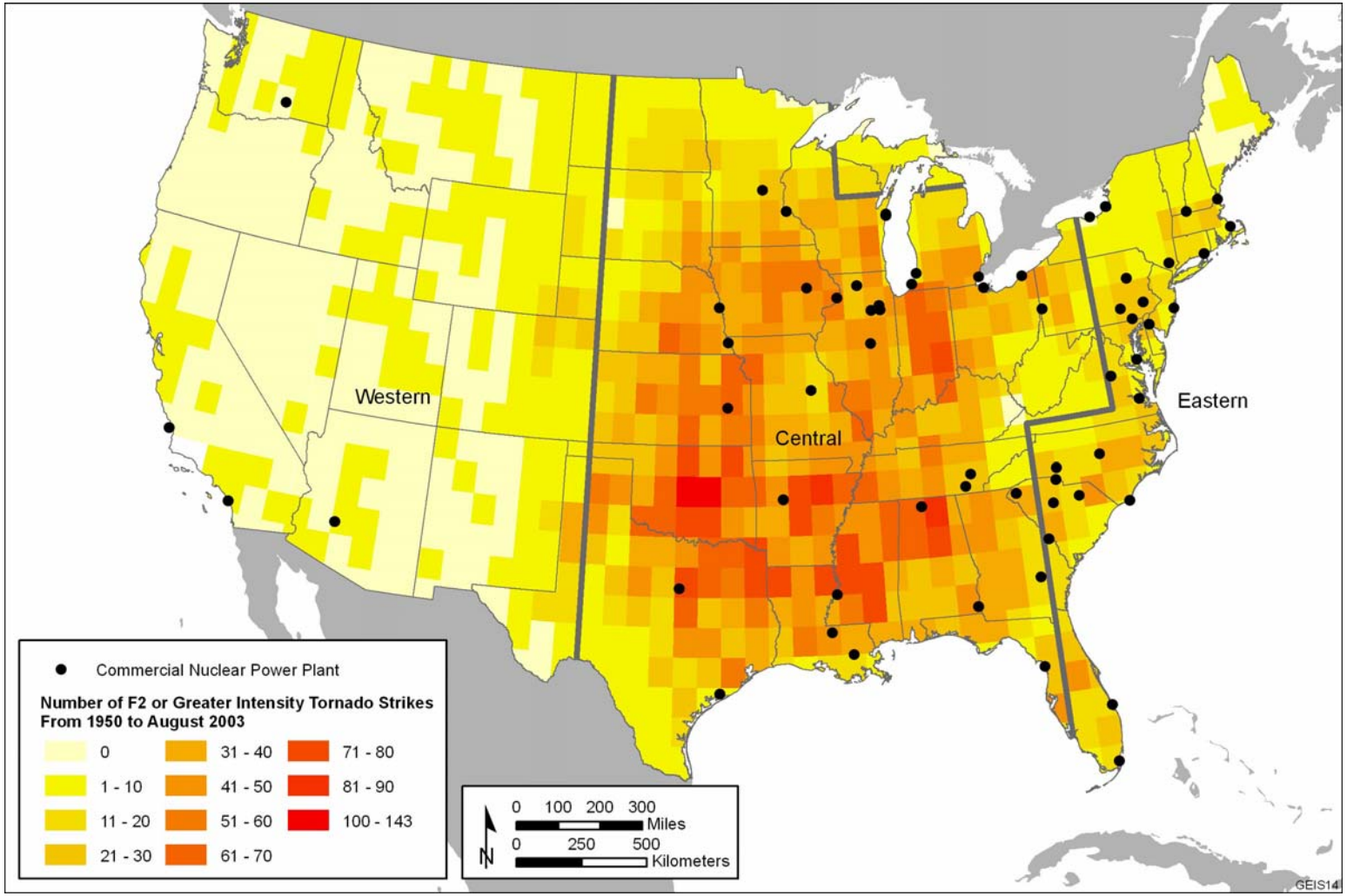

Figure 3.3-1. Distribution of Tornado Strikes with Intensities of F2 or More over the Contiguous United States by One Degree of Latitude and Longitude Boxes (1950 through August 2003) (Source: Adapted from Figure 2-2 in NRC 2006a)

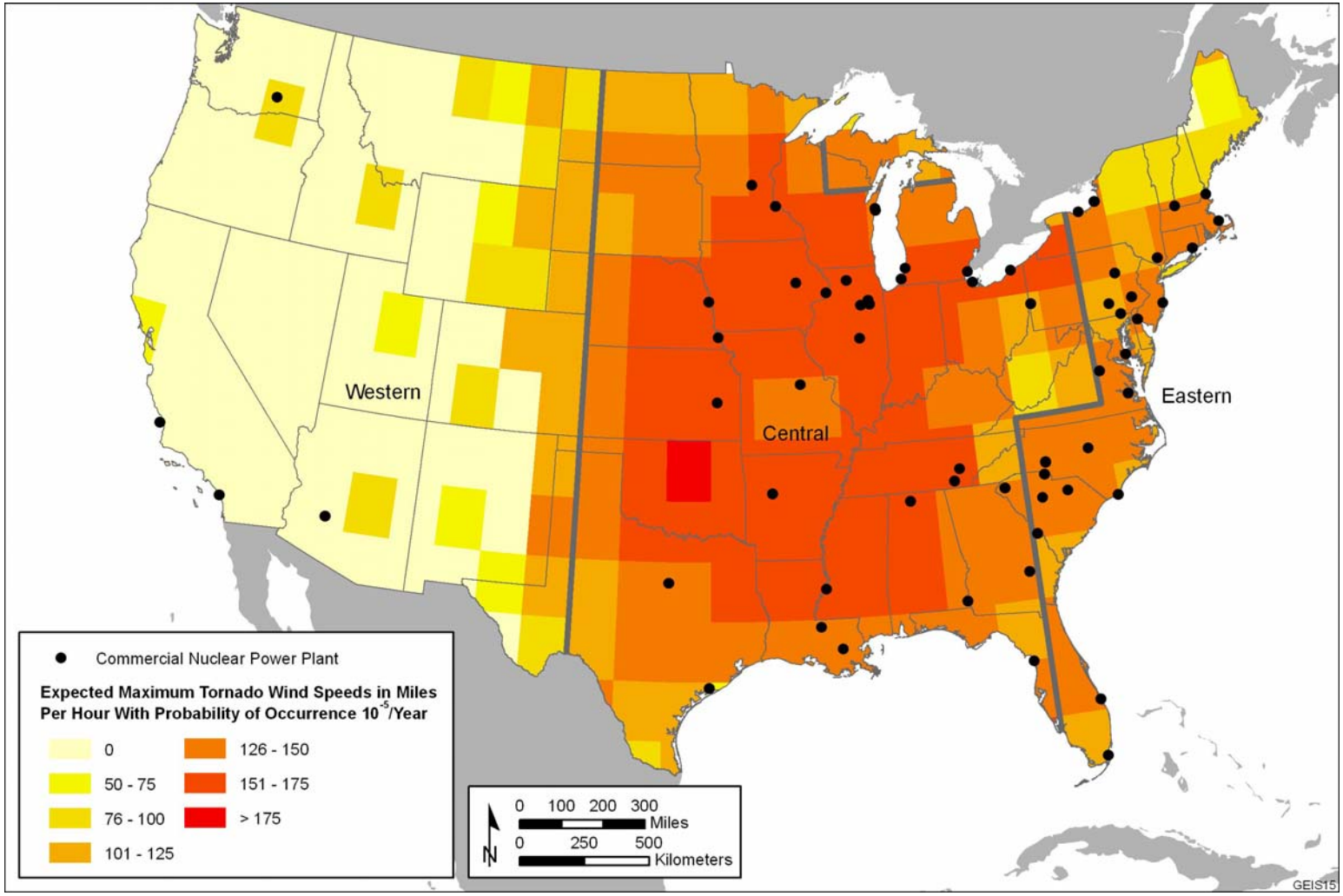

Figure 3.3-2. Expected Maximum Tornado Wind Speed with a Probability of One in 100,000 of Occurring over the Contiguous United States by Two Degrees of Latitude and Longitude Boxes (Source: Adapted from Figure 5-8 in NRC 2006a)

3.3.2 Air Quality

Air emissions related to criteria air pollutants and volatile organic compounds (VOCs) are released to the atmosphere from ancillary non-nuclear facilities at nuclear power plants. These emissions of criteria air pollutants include particulate matter (PM) with a mean aerodynamic diameter of 10 μm or less (PM_{10}), PM with a mean aerodynamic diameter of 2.5 μm or less ($PM_{2.5}$), sulfur dioxide (SO_2), nitrogen oxides (NO_x), carbon monoxide (CO), lead (Pb), and volatile organic compounds (VOCs). The facilities include backup diesel generators, boilers, pump engines, and cooling towers. The emissions from these facilities (and, if applicable, emissions from the incineration of any waste products) must comply with State and local regulatory air quality permitting requirements. Because nuclear power plant ancillary facilities are generally low emitters of criteria air pollutants and VOCs, the impact on potential ambient air quality is minimal. However, special permit conditions may be applicable under various regulatory jurisdictions for facilities located in EPA-designated nonattainment areas.

The U.S. Environmental Protection Agency (EPA) has set National Ambient Air Quality Standards (NAAQS) for six criteria pollutants, including sulfur dioxide (SO_2), nitrogen dioxide (NO_2), carbon monoxide (CO), ozone (O_3), particulate matter (PM; $PM_{10,}$ and $PM_{2.5}$), and lead (Pb), as shown in Table 3.3-2. Primary NAAQS specify maximum ambient (outdoor air) concentration levels of the criteria pollutants with the aim of protecting public health with an adequate margin of safety. Secondary NAAQS specify maximum concentration levels with the aim of protecting public welfare. The NAAQS specify different averaging times as well as maximum concentrations. Some of the NAAQS for averaging times of 24 hours or less allow the standard values to be exceeded a limited number of times per year, and others specify other procedures for determining compliance. States can have their own State Ambient Air Quality Standards (SAAQS). SAAQS must be at least as stringent as the NAAQS and they can include standards for additional pollutants. If a State has no standard corresponding to one of the NAAQS, the NAAQS apply.

An area where air quality is above NAAQS levels is called a nonattainment area. Previous nonattainment areas where air quality has improved to meet the NAAQS are redesignated maintenance areas and are subject to an air quality maintenance plan.

Table 3.3-2. National Ambient Air Quality Standards (NAAQS)

Pollutant[a]	Averaging Time	NAAQS[b] Value	NAAQS[b] Type[c]
SO_2	3-hour	0.50 ppm (1,300 μg/m^3)	S
	24-hour	0.14 ppm	P
	Annual	0.03 ppm	P
NO_2	Annual	0.053 ppm (100 μg/m^3)	P, S
CO	1-hour	35 ppm (40 mg/m^3)	P
	8-hour	9 ppm (10 mg/m^3)	P
O_3	1-hour	0.12 ppm[d]	P, S
	8-hour	0.075 ppm	P, S
PM_{10}	24-hour	150 μg/m^3	P, S
$PM_{2.5}$	24-hour	35 μg/m^3	P, S
	Annual	15.0 μg/m^3	P, S
Pb	Rolling 3-month	0.15 μg/m^3	P, S

(a) Notation: CO = carbon monoxide; NO_2 = nitrogen dioxide; O_3 = ozone; Pb =lead; $PM_{2.5}$ = particulate matter ≤ 2.5 μm; PM_{10} = particulate matter ≤ 10 μm; and SO_2 = sulfur dioxide.

(b) Refer to 40 CFR 50 for detailed information on attainment determination and reference method for monitoring.

(c) P = Primary standard whose limits were set to protect public health; S= Secondary standard whose limits were set to protect public welfare.

(d) On June 15, 2005, the 1-hour ozone standard was revoked for all areas except the 8-hour ozone nonattainment Early Action Compact Areas (EAC) areas (those do not yet have an effective date for their 8-hour designations). The 1-hour standard will be revoked for these areas one year after the effective date of their designation as attainment or nonattainment for the 8-hour ozone standard.

Source: EPA (2008).

The currently designated nonattainment areas (as of September 2007)[(a)] for each criteria air pollutant (ozone [O_3], PM_{10}, $PM_{2.5}$, SO_2, NO_2, CO, and Pb) and their relative locations with respect to operating nuclear power plants are shown on the maps in Figures 3.3-3 through 3.3-10. There are currently more than 30 operating plants located within or adjacent to counties with designated nonattainment areas. The designations shown on the maps in Figures 3.3-4, 3.3-5, and 3.3-7 through 3.3-10 for O_3 (1-hour), PM_{10}, SO_2, NO_2, CO, and Pb should be considered preliminary because they are being reviewed by the respective EPA regional offices. These plants are shown on county-level maps with the associated nonattainment designations in Section D.2 in Appendix D.

The operation of wet cooling towers results in the emission of salt and other inorganic and/or organic particles to the air. These releases are called drift emissions. Salt is the dominant drift component – being typically greater than 70 percent of the total suspended PM released – for coastal plants with wet towers that use seawater as the coolant. Drift emissions from cooling towers are also associated with deposits on downwind surfaces (e.g., vegetation, automobiles, and structures), known as drift deposition, and a resulting increase in downwind PM concentrations. The magnitude and pattern of these impacts could include both near-field and far-field receptors. The degree of impacts would depend on a number of factors, such as the size of the particles, the steam condenser flow rate or throughput, and the cooling tower height.

Cooling tower particulate emissions are formed entirely as secondary particles from evaporation of wet tower drift droplet releases to the atmosphere. Because the drift droplets generally contain the same chemical impurities (primarily dissolved solids) as those in the cooling water circulating through the tower, these impurities wind up in the drift that escapes the tower. Large drift droplets settle out of the tower's exhaust air stream and are deposited on surfaces near the tower. This process can lead to wetting, icing, and salt deposition and cause related problems, such as damage to equipment or vegetation. Other drift droplets may evaporate and form mixed chemical particles from water-soluble materials (total dissolved solids or TDS), such as sea salt, and water-insoluble (total suspended solids or TSS) droplet-encapsulated particles (Pruppacher and Klett 1980) that are transported in the air as suspended PM before being deposited on surfaces downwind. Both PM_{10} and $PM_{2.5}$ are generated when the drift droplets evaporate and leave fine PM formed by the crystallization of dissolved solids. Dissolved solids found in cooling tower drift can consist of salt compounds [e.g., NaCl, $NaNO_3$, $(NH_4)_2SO_4$] and other mineral matter, corrosion inhibitors, and biocides.

(a) Nonattainment area designations are ever-changing and redesignations are expected due to EPA's recent standard revisions for PM_{10} and $PM_{2.5}$ (Dec. 17, 2006), 8-hour O_3 (May 27, 2008), and Pb (Oct. 15, 2008). Please refer to the Web at http://www.epa.gov/oaqps/greenbk/index/html for the most updated nonattainment area designations.

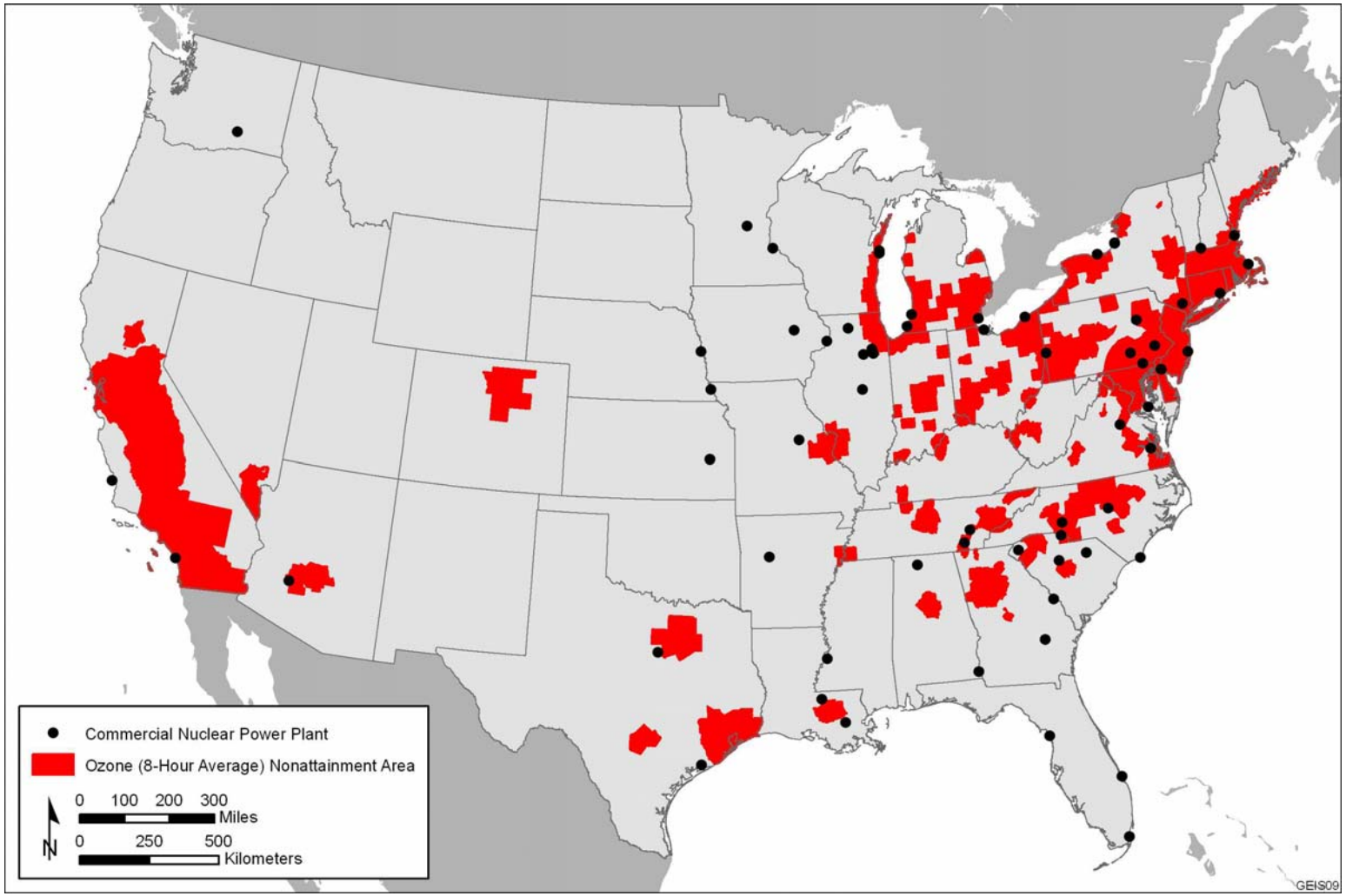

Figure 3.3-3. Locations of Operating Nuclear Plants Relative to EPA-Designated 8-Hour Ozone Nonattainment Areas

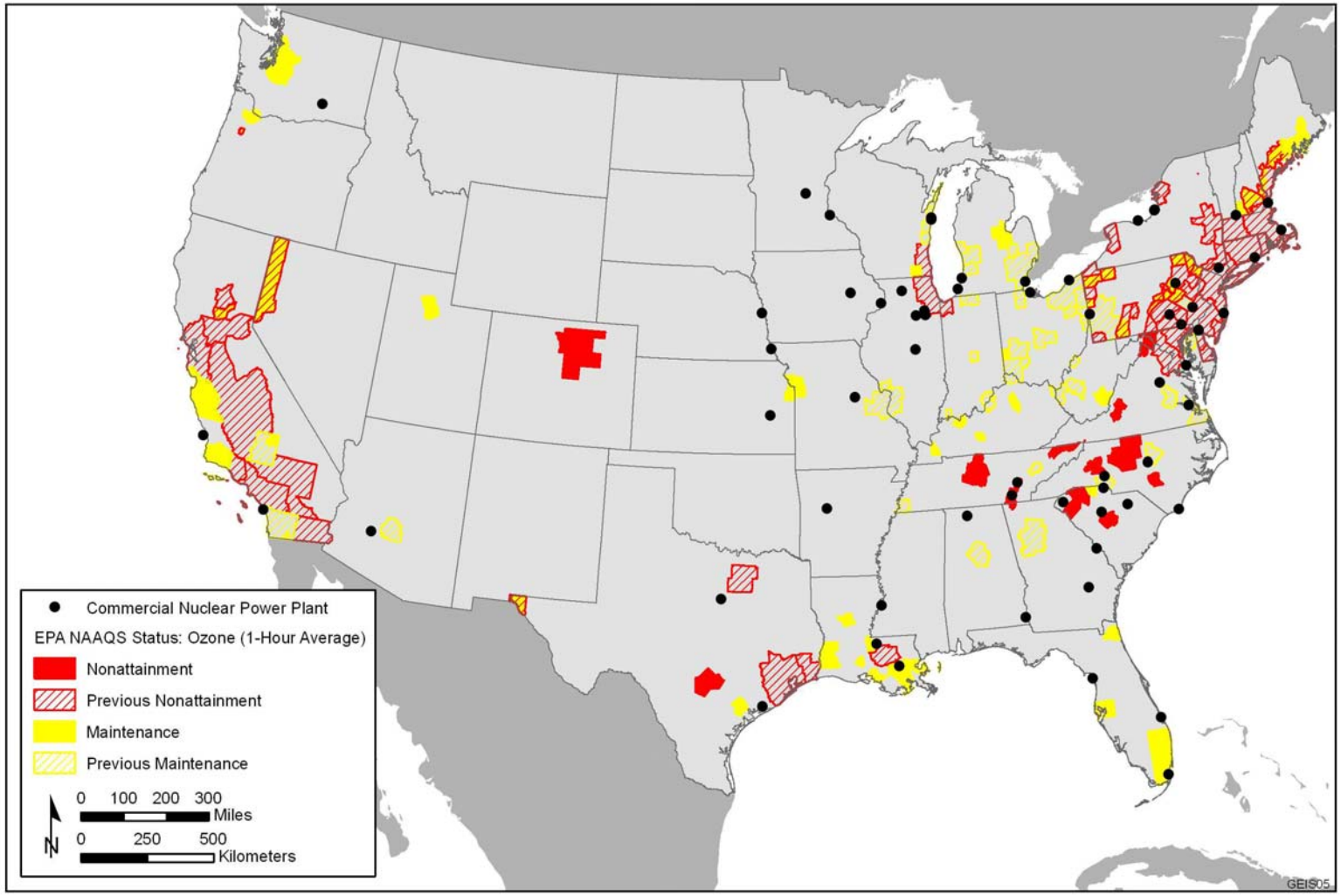

Figure 3.3-4. Locations of Operating Nuclear Plants Relative to EPA-Designated 1-Hour Ozone Nonattainment Areas

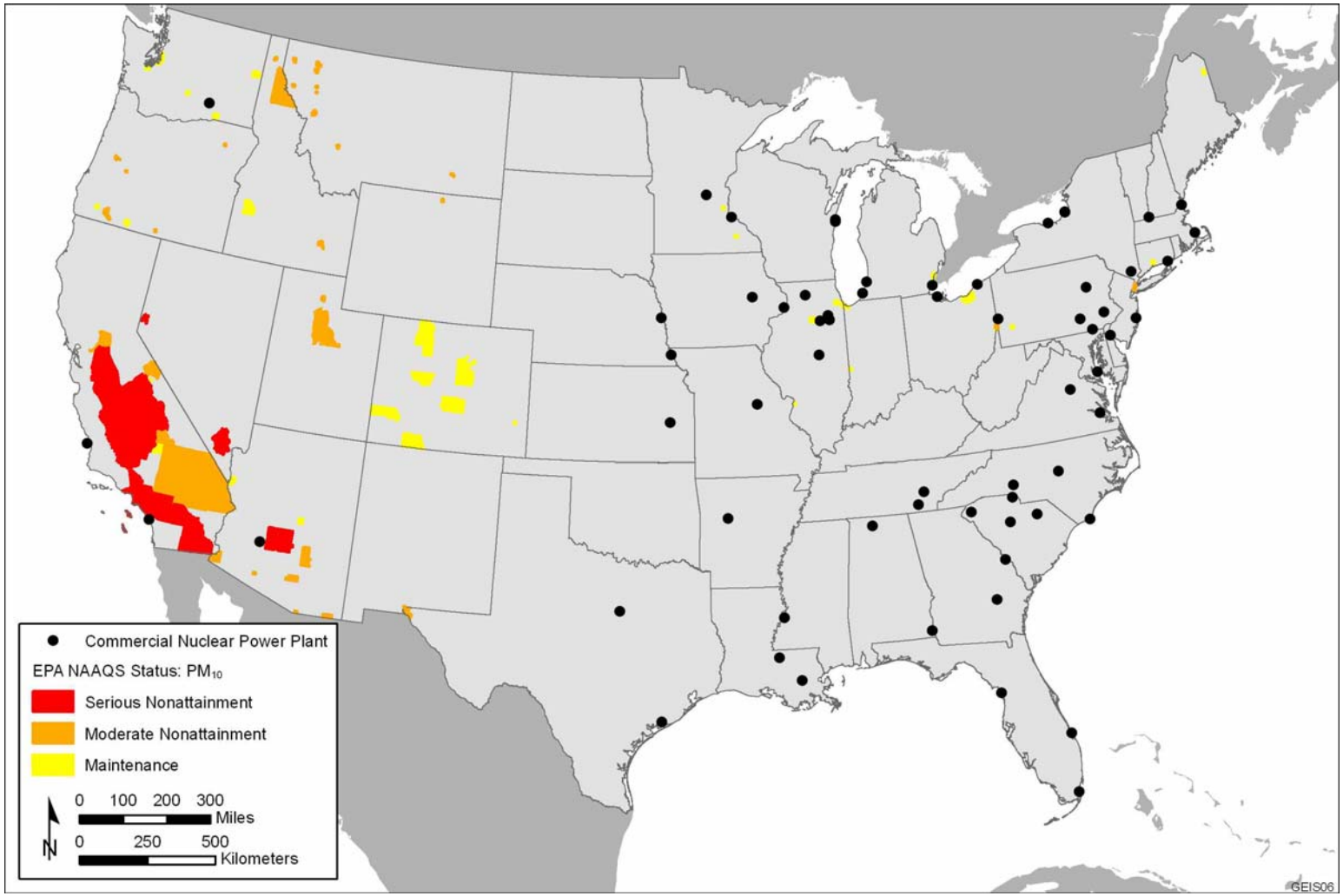

Figure 3.3-5. Locations of Operating Nuclear Plants Relative to EPA-Designated PM_{10} Nonattainment Areas

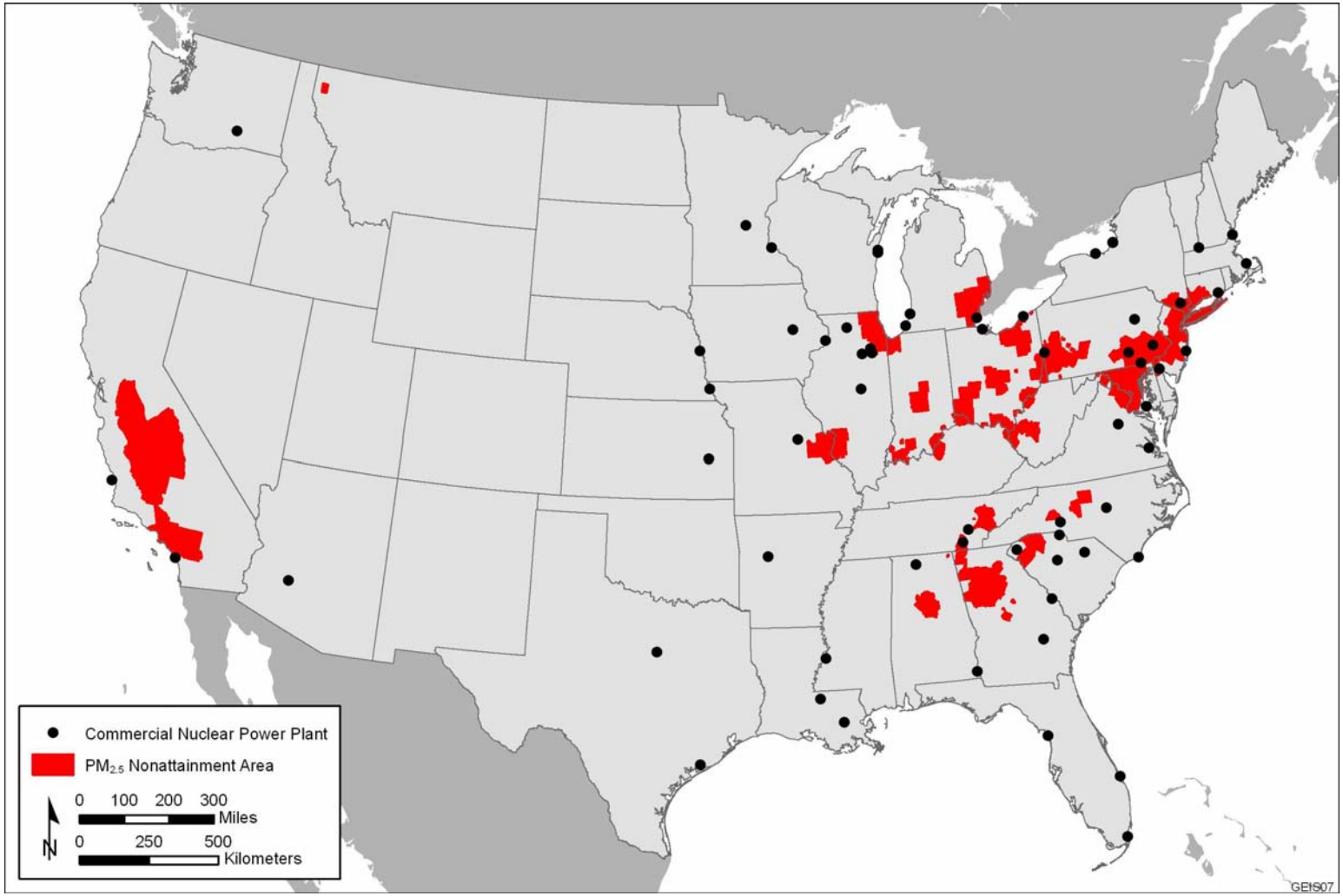

Figure 3.3-6. Locations of Operating Nuclear Plants Relative to EPA-Designated $PM_{2.5}$ Nonattainment Areas

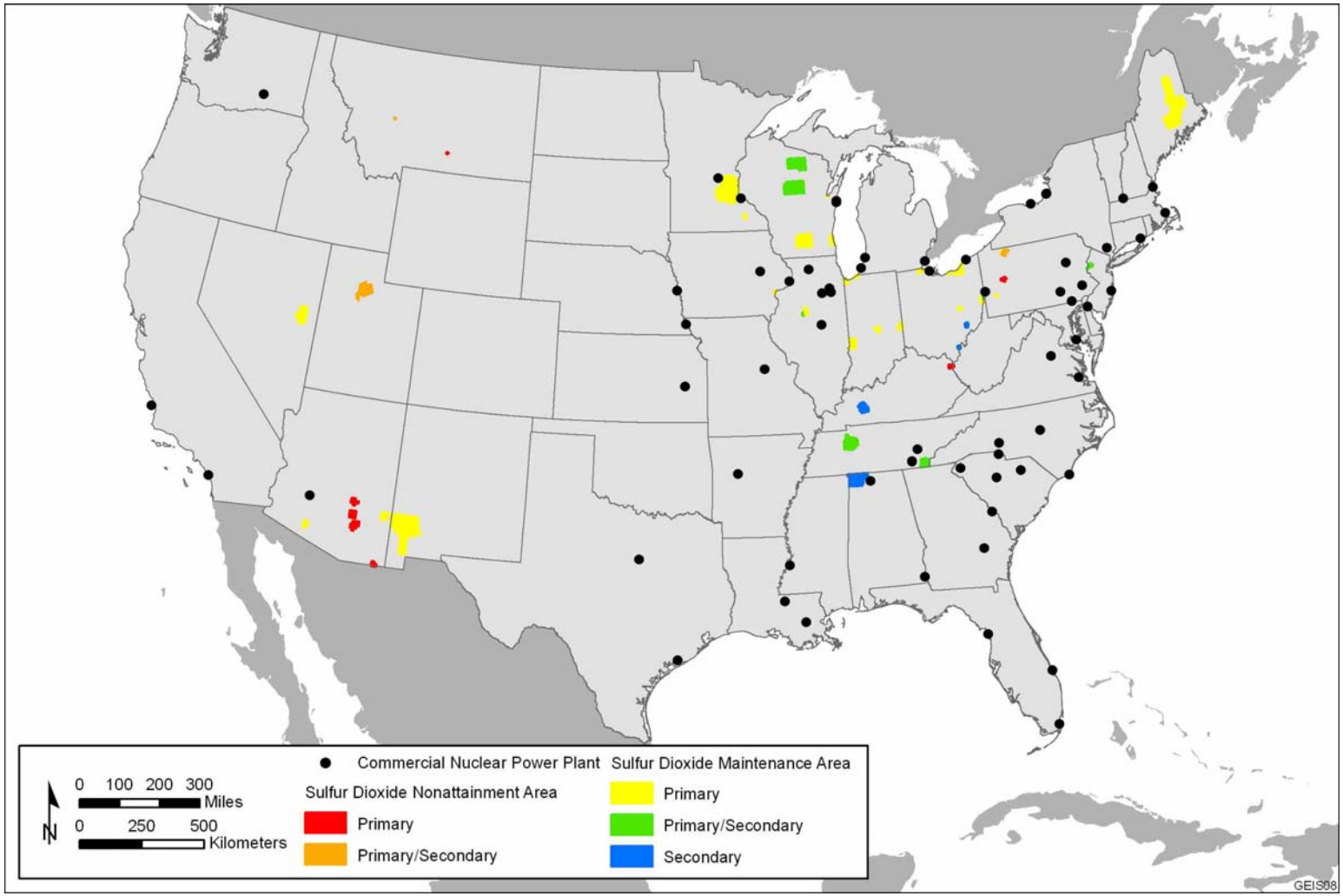

Figure 3.3-7. Locations of Operating Nuclear Plants Relative to EPA-Designated SO_2 Nonattainment Areas

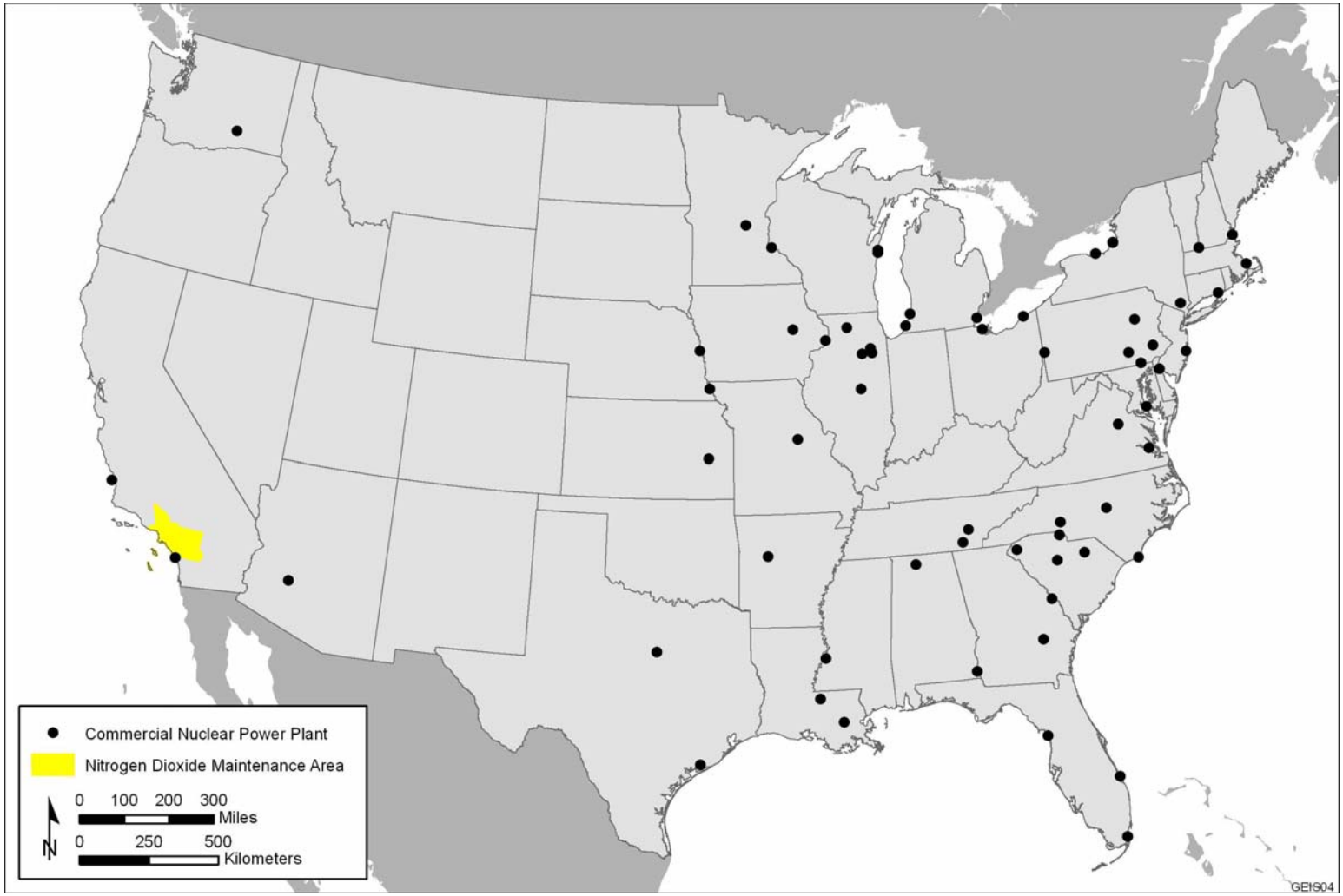

Figure 3.3-8. Locations of Operating Nuclear Plants Relative to EPA-Designated NO_2 Nonattainment Areas

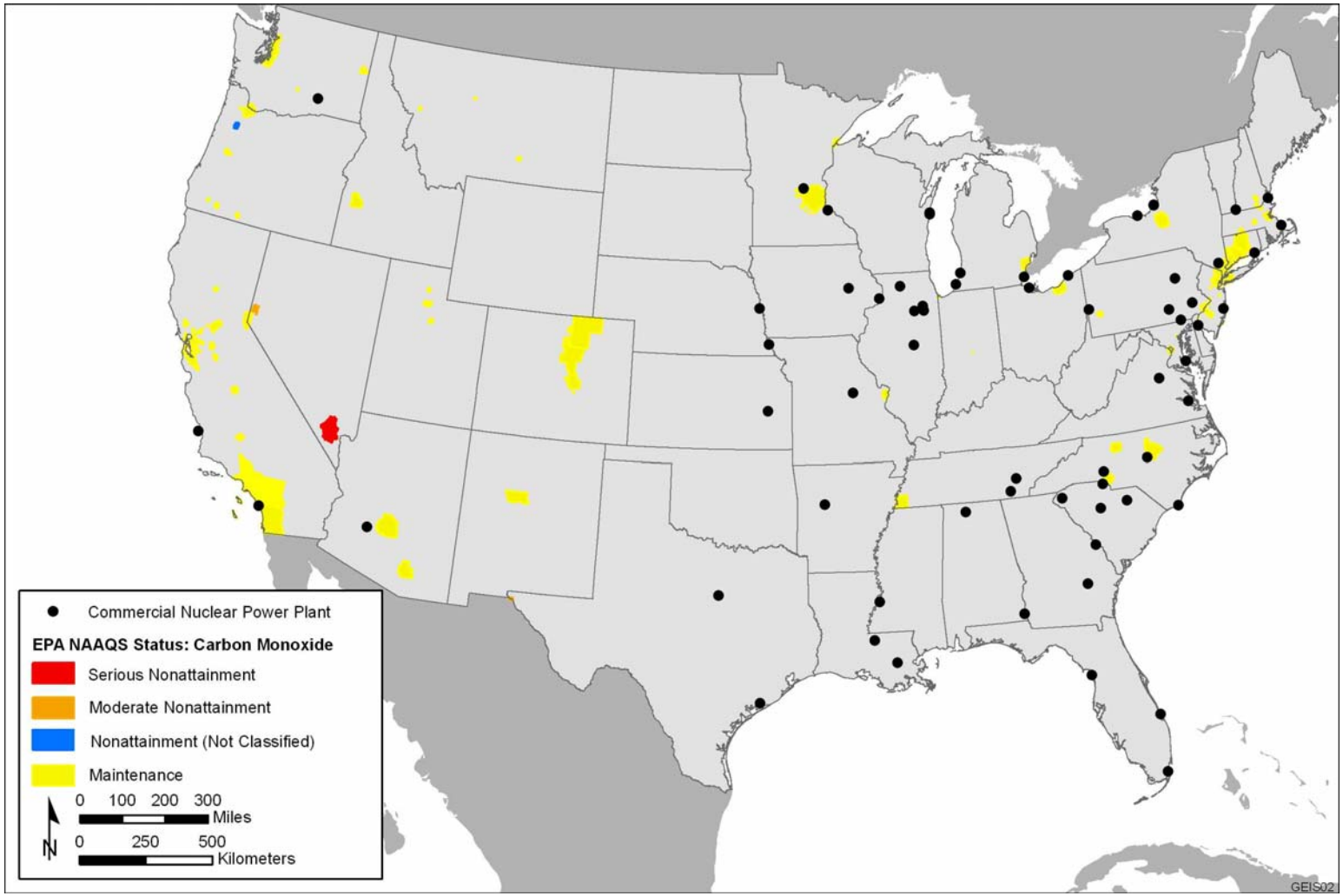

Figure 3.3-9. Locations of Operating Nuclear Plants Relative to EPA-Designated CO Maintenance and Nonattainment Areas

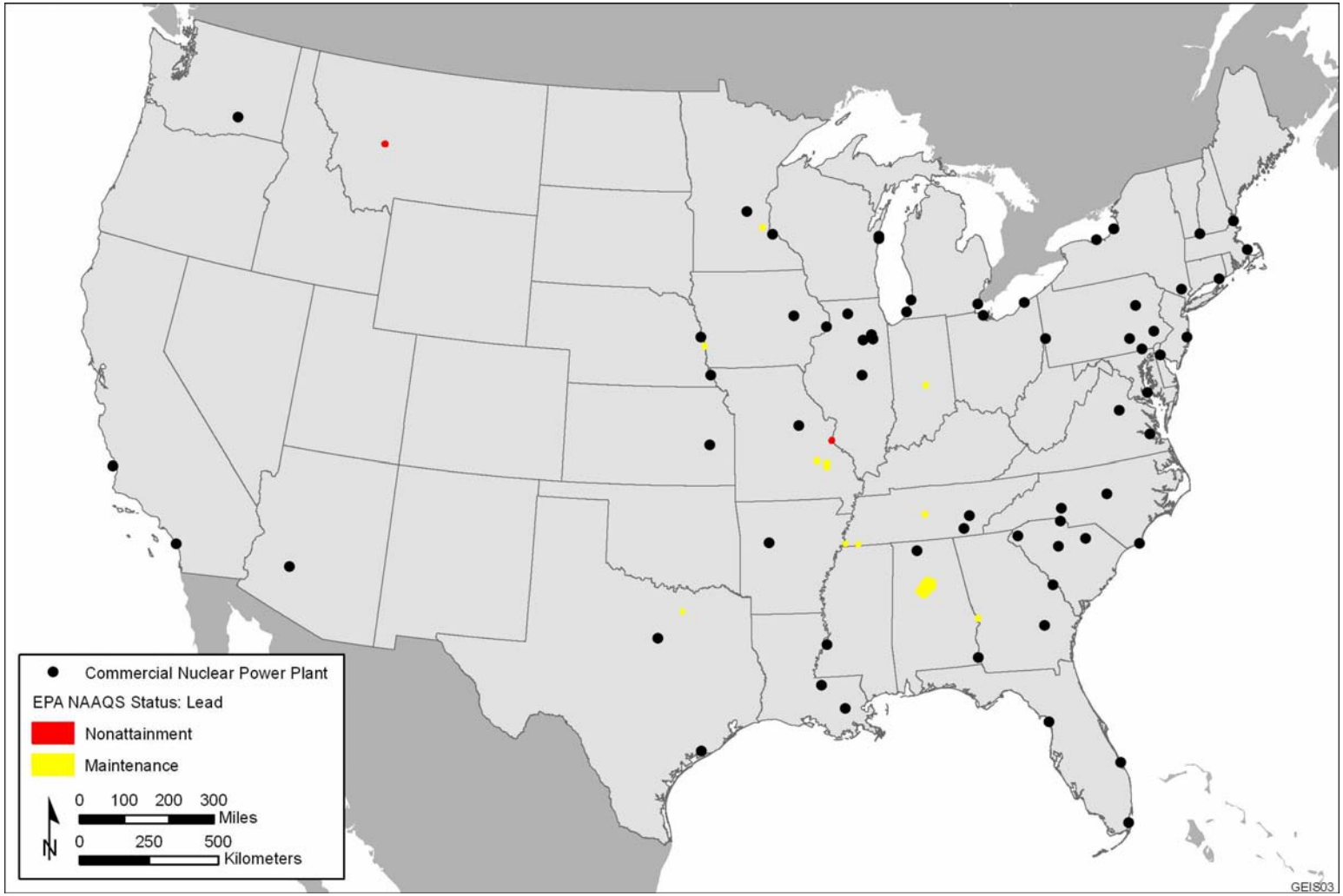

Figure 3.3-10. Locations of Operating Nuclear Plants Relative to EPA-Designated Pb Nonattainment Areas

The magnitude of drift-related PM_{10} and $PM_{2.5}$ emissions from wet towers depends on several conditions and parameters, such as the makeup water composition, concentrations of TDS (organic matter, biocides, corrosion inhibitors, NaCl), steam condenser flow rate, and drift eliminator efficiency. In comparison, drift emissions from cooling tower systems using seawater are over 7 times greater than those from systems supplied with freshwater makeup feeds, if everything else is held constant. However, one plant (Palo Verde in Arizona) uses makeup water derived from the Phoenix City Sewage Treatment Plant. Reported emission data indicate that wastewater treatment at this facility is good. The associated drift emissions from the six mechanical draft cooling towers at the Palo Verde plant are estimated at 7.7 and 6.4 lb/hr (3.5 and 2.9 kg/hr) for PM_{10} and $PM_{2.5}$, respectively (MCAQD 2006). These emissions are relatively small and typical for a well-controlled cooling tower using a water supply with low TDS concentration levels. Palo Verde's cooling tower operates in compliance with operating permit conditions issued by the Maricopa County Air Quality Department and is located in a $PM_{2.5}$ nonattainment area.

There is only one plant, Hope Creek in New Jersey, that uses high-salinity water (from the Delaware River Estuary) as the reactor coolant in a natural draft cooling tower. On the basis of recent air quality modeling conducted in support of an extended power uprate from about 3300 to about 3800 megawatts-thermal [MW(t)], the analysis of drift emissions and air impacts from Hope Creek's natural draft cooling tower was assessed (NRC 2007b). The analysis showed that the upgrade would increase the particulate cooling tower drift emissions from the current rate of 29.4 lb/hr (13.3 kg/hr) to an average rate of 35.6 lb/hr (16.1 kg/hr, with a maximum of 42.0 lb/hr [19.1 kg/hr]). Particulates (primarily salts) from the cooling tower are primarily PM_{10}. Although smaller suspended drift particles would also likely be generated from evaporation of cooling tower plume droplets, estimates of the size distribution of generated drift particles to determine the $PM_{2.5}$ fraction were not made. The NRC determined that the estimated increase in particulate emissions would exceed the New Jersey Department of Environmental Protection's (NJDEP) regulatory maximum hourly emission limit of 30 lb/hr (13.6 kg/hr) for particulates (NJDEP 1998). However the NJDEP's Bureau of Technical Services reviewed the air quality modeling conducted in support of the proposed power uprate and determined that the cooling tower emissions would not exceed the NAAQS for PM_{10} or New Jersey's Ambient Air Quality Standards for PM_{10}. On the basis of this determination, the NRC concluded that there would be no significant particulate emission impacts associated with the Hope Creek Plant's cooling tower at the associated higher makeup water throughput necessary to sustain the higher requested plant operating loads. On June 13, 2007, NJDEP issued its final Title V air permit for the Hope Creek cooling tower, authorizing a variance to the plant's air operating permit with an hourly emission rate of 42 lb/hr (19.1 kg/hr) (NJDEP 2007). In addition, a prevention of significant deterioration (PSD) applicability determination by the EPA concluded that the requested power uprate would not result in a significant increase in emissions and

would not be subject to PSD review (NJDEP 2007). Further regulatory review was not required since the Hope Creek plant is located in an attainment area for PM_{10}.

Although there is the potential for some air quality impacts to occur as a result of equipment and cooling tower operations, even in the worst case situation (Hope Creek), the impacts would be considered small, at least in part because of the fact that licensees would be required to operate within State permit requirements.

Transmission lines have been associated with the production of minute amounts of O_3 and NO_x. These pollutants are associated with corona – the breakdown of air that is very near high-voltage conductors. Corona is a phenomenon associated with all energized transmission lines. Under certain conditions, the localized electric field near an energized conductor can be sufficiently concentrated to produce a tiny electric discharge that can ionize air close to the conductors (EPRI 1982). This partial discharge of electrical energy is called corona discharge, or corona. Corona is most noticeable for higher-voltage lines during rain or fog conditions. In addition to the small quantities of O_3 and NO_x that form, other manifestations of corona events include energy loss, interference with radio or television transmission, and ambient noise (see Section 3.3.3). Typically, corona interference with radio and television reception is not a design problem. Interference levels in both fair and rainy weather are extremely low at the ROW edge for 230-kV and lower transmission lines, and they usually meet or exceed the reception guidelines of the Federal Communications Commission (FCC). Through the years, line designs that greatly reduce corona effects have been developed. Because transmission line emissions associated with corona discharge are so small when compared with emissions from other sources of air pollution (e.g., ozone precursors from automobiles, power plants, and large industrial boilers), these emissions are not a regulated source of air pollution in the United States.

Airborne radiological releases during normal plant operation and associated doses to downwind populations are discussed in Section 3.9.

3.3.3 Noise

The principal sources of noise from nuclear power plant operations are natural-draft and mechanical-draft cooling towers, transformers, and loudspeakers. Other occasional noise sources may include auxiliary equipment (such as pumps to supply cooling water) and corona discharge. Generally, these plant noise sources are not perceived by a large number of people offsite because the level of noise from the surrounding community and highway is high (60 to 65 dB(A)) (FICN 1992). In rural or low-population areas, where background noise levels are in a range of 35 to 45 dB(A), plant noises are more noticeable.

In most cases, the sources of noise are far enough away from sensitive receptors outside plant boundaries that the noise is attenuated to nearly ambient levels and is scarcely noticeable. However, during the original license application process, some sites identified sensitive receptors near plant boundaries that would experience noise greater than 10 dB(A) above ambient levels. Those levels would increase the difficulty in communicating by speech outdoors, requiring people to speak louder to be heard. In no case is the offsite noise level from a plant sufficient to cause hearing loss.

There are no Federal regulations for public exposures to noise. When noise levels are below the levels that result in hearing loss, impacts have been judged primarily in terms of adverse public reactions to noise. The Department of Housing and Urban Development (24 CFR 51.101(a)(8)) uses day-night average sound levels of 55 dBA, recommended by EPA as guidelines or goals for outdoors in residential areas (EPA 1974). However, noise levels are considered acceptable if the day-night average sound level outside a residence is less than 65 dBA.

Natural draft and mechanical draft cooling towers emit noise of a broadband nature, whereas transformers emit a humming noise of a specific tonal nature at twice the normal voltage or current cycle (core expansion and contraction twice its 60 Hz cycle) with a vibration or noise harmonic of 120 Hz. This is called the fundamental noise frequency. Transformer noise originates almost entirely in the reactor core as a result of the restrictive effects of steel on the generated magnetic field, a phenomenon called magnetostriction, which causes the core and its clamps to vibrate (Ellingson 1979). Since the core is not symmetrical and the magnetic effects do not behave in a simple way, the resultant noise is not pure in tone. This is the noise or vibration produced. The noise radiated by transformers is primarily composed of discrete tones at even harmonics of line frequency (e.g., 120, 240, 360 Hz) when the line frequency is 60 Hz (Vér and Beranek 2006).

Loudspeakers emit noise at audible frequencies, generally below 5000 Hz. Because of the broadband character of the noise at cooling towers, the noise associated with the towers is less obtrusive and is largely indistinguishable from the noise from transformers or loudspeakers. Transformer noise is distinct because of its specific low frequencies. The low frequencies are not attenuated with distance and intervening materials as much as higher frequencies are; thus, low frequencies are more noticeable and obtrusive. However, at most sites employing cooling towers, transformer noise is masked by the broadband cooling tower noise.

Cooling tower and transformer noise from existing equipment does not change appreciably during the time when the plant is operating, nor does the crackling sound of transmission lines during storms. Increases or decreases in site noise levels can occur when equipment is upgraded or modified to meet life-cycle maintenance requirements or when the power level is uprated.

Transmission lines can generate a small amount of sound energy during corona activity. During corona events (see Section 3.3.2), the ionization of the air that surrounds conductors of the high-voltage transmission lines, which is caused by electrostatic fields in these lines, generates impulse corona currents. When the voltage on a particular phase is high enough, a corona burst occurs, and a noise is generated. This noise occurs primarily on the positive power line voltage wave and is referred to as positive corona noise (Maruvada 2000). Although conductors are designed to minimize corona discharges, surface irregularities caused by damage, insects, raindrops, or contamination may locally enhance the electric field strength enough for corona discharges to occur (D'Amore 1985). This audible noise from the line can barely be heard in fair weather on higher-voltage lines. During wet weather, water drops collect on the conductor and increase corona activity so that a crackling or humming sound may be heard near the line. This noise is caused by small electrical discharges from the water drops.

3.4 Soils, Geology, and Seismology

During the original construction of U.S. commercial nuclear power plants, large areas of land were disturbed for the buildings, roads, parking lots, underground utilities (including cooling water system intake and discharge systems), aboveground utility structures (including transmission lines), cooling towers, and other structures. Nuclear power plant sites range in size from 84 ac (34 ha; at the San Onofre plant in California) to 14,000 ac (5700 ha; at the Clinton plant in Illinois) (Table 3.1-1). The proportions of land that were disturbed by construction activities or remain undeveloped vary from site to site.

The soil resources available at each power plant are site-specific in terms of their potential erodibility and their potential use for agricultural activities, and vary spatially on the basis of the distribution of different soil types on the site. Many of the plants in the Midwest, Great Plains, East, and Southeast (with the exception of plants in Florida) are located in areas with prime farmland (USDA 2001). Nuclear plants in Florida and the West are not located near prime farmland. Undeveloped or restored portions of each site may be leased by the licensees for agricultural production. However, some areas may not be made available for leasing if they are within a security zone.

Soils and subsoils at nuclear plant sites also vary in terms of their geotechnical properties relative to site construction projects and their hydraulic properties relative to the movement of infiltration, groundwater, and contaminants. Depending on the nuclear plant's location and design, riverbanks or coastlines may need to be protected to prevent erosion, especially at water intake or discharge structures.

Nuclear power plants are located in a variety of physiographic provinces, though the largest numbers are in the Atlantic Coastal Plain and Central Lowlands provinces. Each physiographic

province consists of a regional geologic terrain with a broadly similar structure and character. However, within each province, the local geology may differ significantly from the regional conditions. The geologic setting of each plant is therefore a site-specific function of the local geology rather than the physiographic province in which it is located. Plants are located in a wide variety of settings, including uplands along rivers, glaciated till plains, Great Lakes shorelines, and coastal sites.

The geologic resources in the vicinity of each nuclear plant vary with the location and may support extraction industries. These industries may include sand and gravel pit operations or quarrying for crushed stone. In general, there is little if any interaction between plant operations and local extraction industries, although some nuclear plants may purchase materials for landscaping and site construction from local sources. Commercial mining or quarrying operations are not allowed within plant boundaries.

Nuclear power plants are constructed according to seismic specifications in 10 CFR Part 50, Appendix S. Their spent fuel pools are designed with reinforced concrete, allowing them to remain operable through the largest earthquake that has occurred or is expected to occur in the area. The U.S. Geological Survey (Frankel et al. 2005) mapped seismic hazards across the United States. In terms of the peak horizontal acceleration with a 10 percent probability of exceedance in 50 years, most nuclear power plants are located in seismically low-hazard areas, with peak accelerations of 0 to 8 percent of gravity. However, the two California plants – Diablo Canyon and San Onofre – are in locations with peak acceleration of 25 to 30 percent of gravity. These plants have been designed to safely withstand the seismic effects associated with earthquakes with epicenters at various locations and at various depths, magnitudes, and ground accelerations (AEC 1973; Southern California Edison 2007).

3.5 Hydrology

3.5.1 Surface Water

The dominant water requirement at most nuclear power plants is cooling water, which, in most cases, is obtained from surface water bodies. For this reason, most plants are located near suitable supplies of surface water, such as rivers, reservoirs, lakes, the Great Lakes, oceans, bays, or manmade impoundments. An exception is the Palo Verde plant in Arizona, which relies on treated municipal wastewater for cooling. Because of the interaction between power plants and surface water, issues arise in terms of both usage and quality. These are discussed in separate sections below.

3.5.1.1 Surface Water Use

Nuclear power plants withdraw large amounts of surface water to meet a variety of plant needs, especially for condenser cooling (Section 3.1.3). The commercial nuclear power plants considered in the 1996 GEIS are compared in Table 3.5-1 in terms of their condenser flow rates, when normalized to energy production. Included in the table are two plants (Nine Mile Point and Arkansas) that have two reactors each: one with a cooling tower and one with a once-through system. These were tallied separately in the table. The condenser flow rates are similar in magnitude for the various types of cooling systems. Although plants in warmer geographical locations might be expected to have higher water requirements for cooling, a comparison of the locations of the plants and the normalized water use by their cooling systems suggests there is not a correlation between high water use and warmer climate. Design factors are likely responsible for the overlapping ranges in condenser flow rates.

For closed-cycle cooling systems featuring cooling towers, the amount of water consumed equates approximately to the amount of water lost through evaporation and drift. In this type of cooling system, the condenser flow rate is much larger than the withdrawal rate from a surface water body, and this withdrawal rate is essentially the water consumption rate of the system. For once-through cooling systems, the condenser flow rate is nearly equal to the surface water withdrawal rate, and the consumption rate is much less since water is returned directly to the surface water body and undergoes less evaporation than in a cooling tower.

Table 3.5-1. Overall Condenser Cooling Water Flow Rate and Consumptive Water Loss Rate per 1000 MW(e)

Cooling System [(a)]	Number of Sites	Condenser Cooling Water Flow Rate per 1000 MW(e) in gpm (m^3/s)[(b)]	Average Consumptive Water Loss per 1000 MW(e) in gpm (m^3/s)[(c)]
Pond and/or canal	6	300,000 to 650,000 (19 to 41)	9300 (0.59)
Mechanical draft cooling tower	8	140,000 to 760,000 (9 to 48)	14,000 (0.89)
Natural draft cooling tower	19	170,000 to 760,000 (11 to 48)	13,000 (0.82)
Once-through cooling	37	250,000 to 900,000 (16 to 57)	8100 (0.51)
Once-through cooling with tower	6	220,000 to 680,000 (14 to 43)	Not available

(a) For cases of multiple reactors per site, the water use was combined if the reactors used the same type of cooling system. If multiple reactors at a site used different cooling systems (Nine Mile Point Nuclear Station and Arkansas Nuclear One), water use for each system was tallied separately.
(b) Source: NRC (1996).
(c) Source Giusti and Meyer (1977). Note that Giusti and Meyer calculated consumptive use for a different set of plants.

Cooling towers consume water at 13,000 to 14,000 gpm (0.82 to 0.88 m^3/s), normalized to 1000 MWe, as a result of evaporation and drift (Table 3.5-1) (Giusti and Meyer 1977). Additional water requirements offset the blowdown returned to the surface water body. Water withdrawal for plants with closed-cycle cooling systems is 5 to 10 percent of the withdrawal for plants with once-through cooling systems, with much of this water being used for makeup of water lost to evaporation (NRC 1996). An estimate of typical makeup water needs for plants having closed-cycle cooling, normalized to a 1000 MW(e) reactor, is about 14,000 to 18,000 gpm (0.9 to 1.1 m^3/s) for all makeup needs (NRC 1996). This range of makeup water requirements includes not only the consumed water but also the offset of blowdown, which is returned to the surface water body. Variation in water use among plants results from the design of the cooling tower, concentration factor of recirculated water, climate at the site, plant operating conditions, and other plant-specific factors.

Once-through cooling systems are somewhat more common than closed-cycle systems (Table 3.5-1). For once-through systems, the water withdrawn is returned to the surface water body with less consumptive loss (8100 gpm or 0.51 m^3/s) per 1000 MW(e) because there is less evaporation than that associated with cooling towers (Giusti and Meyer 1977). The withdrawal rate from the surface water body, however, is much higher than that of a closed-cycle system (e.g., in Table 3.5-1, compare the condenser flow rates needed for once-through systems (which corresponds to their surface water withdrawal) with the consumptive loss of closed-cycle systems (which corresponds to their makeup water requirements) and, therefore, their surface water withdrawal). The thermal discharge from once-through cooling systems is generally higher than that from cooling towers, as discussed below.

Additional operational surface-water-related needs at power plants include service water, auxiliary system supplies, and radioactive waste systems. These needs combined are small relative to the flow needed for condenser cooling (NRC 1996).

Nuclear plant water usage must comply with State, local, and regional regulations regarding water supply. Most States require permits regulating surface water usage.

For plants relying on river water, consumptive water losses reduce surface water supplies for other users downstream. In areas experiencing water availability problems, nuclear power plant consumption could conflict with other existing or potential uses (e.g., municipal and agricultural water withdrawals) and instream uses (e.g., adequate instream flows to protect aquatic biota, recreation, and riparian communities). Water availability issues have not been generally noted in past license renewal evaluations and are likely to occur only during times of extended drought. Both water availability and water temperature are important factors in maintaining operations at power plants. In August 2007, a heat wave resulted in high river water temperatures at the Browns Ferry plant in Alabama (*Huntsville Times* 2007). Because of the reduced capability of the river water to cool the condensers, one of the plant's three reactors

was shut down, while operations at its other two reactors were cut by 25 percent. In summer 2006, the Quad Cities plant in Illinois had to reduce operations because the Mississippi River was warm, and other plants in Illinois and Minnesota had to cut back as a result of drought effects (Nuclear Information and Resource Service 2007). High surface water temperature at the intake does not represent an impact on the environment but rather an effect of the natural conditions on operations.

3.5.1.2 Surface Water Quality

Clean Water Act

- National Pollutant Discharge Elimination System (NPDES) permitting is required for wastewater discharge rate and chemical concentration limits.
- Section 316(a) establishes thermal discharge restrictions.
- Section 316(b) establishes standards for impingement and entrainment of aquatic organisms. Impingement and entrainment standards for individual plants are to be determined through best professional judgment.

Discharges from the circulating cooling water system account for the largest volumes of water and usually the greatest potential impacts on water quality and aquatic systems, although other systems may contribute heat and chemical contaminants to the effluent. All effluent discharges are regulated under the provisions of the Clean Water Act (CWA) and the effluent guidelines, limitations, and standards established by the EPA and individual States. Conditions of discharge for each plant are specified in its NPDES permit issued by the State or EPA. CWA Section 401 requires an applicant for a Federal license to conduct activities that produce discharge into navigable waters to provide the licensing agency with a certification from the State. This certification implies that discharges will comply with CWA requirements (33 USC 1341). If the applicant has not received Section 401 certification, the NRC cannot issue a license, including a renewed license (10 CFR 51.10(c)). NRC recognizes that some states include a 401 certification in the NPDES permit.

3.5.1.2.1 Thermal Effluents

NPDES permits for nuclear power plants may impose maximum temperature limits for effluents (which may vary by season) and/or a maximum temperature increase above the ambient water temperature (referred to as “delta-T,” which also may vary by season). Another approach used to regulate temperature effects is to specify a heat addition, which is calculated as a function of flow rate and temperature. Other aspects of the permit may include the compliance measuring location and restrictions against plant shutdowns during winter to avoid drastic temperature changes in surface water bodies.

The area affected by heated releases to surface water bodies (the thermal plume) varies with site-specific conditions (e.g. discharge temperature, discharge rate, discharge structure location

and design, flow of the surface water body, and temperature of the surface water body). A plume may be assessed in the field through plume mapping or dye tracing. Generally, the use of cooling towers decreases the thermal influence of a plant (e.g., NRC 2006c).

Sections 316(a) and 316(b) of the CWA are relevant to the operation of a nuclear power plant cooling system. Section 316(a) addresses thermal discharges, allowing alternative thermal discharge limits if the applicant can demonstrate protection of aquatic life. Section 316(b) deals with cooling water intakes and ensures that intake structures are designed with the best available technology to minimize impingement and entrainment of aquatic organisms. For this section of the CWA, there are three implementation phases. Phase I (enacted in December 2001) is for new facilities that use more than 2 million gpd (7.6 million L/d), with more than 25 percent used for cooling purposes. Phase II (enacted in July 2004) is for existing facilities that use more than 50 million gpd (189 million L/d). Phase III applies to existing manufacturing facilities with a design intake flow of at least 50 million gpd (189 million L/d) and new offshore and coastal oil and gas extraction facilities designed for withdrawing at least 2 million gpd (7.6 million L/d).

Phase II called for reducing impingement by 80 to 95 percent from an uncontrolled level and reducing entrainment by 60 to 90 percent from an uncontrolled level. Included in Phase II were compliance alternatives to existing technology, additional fish protection technologies (e.g., screens and fish return systems), and restoration measures. However, effective July 9, 2007, Phase II was suspended. According to the Clean Water Act, intakes are to be designed by using the best technology available for minimizing any environmental impact. Under EPA's interim guidance, intakes are now to be designed on a case-by-case basis by using best professional judgment (EPA 2007).

3.5.1.2.2 Other Effluents

Liquids containing chemicals and other parameters are discharged to surface water from nuclear power plants, as discussed in Section 3.1.4.1. The concentrations and flow rates of the liquids vary with activities involving the systems associated with floor drains, blowdown, laundries, decontamination, and other facilities. The liquids may also undergo treatment before reuse or discharge. These effluents are regulated under the plant's NPDES permit. As part of the permitting process, concentration limits are established, and monitoring takes place at specific outfalls or other monitoring locations. The frequency of sampling is also covered by permit. State regulatory agencies also provide the reporting requirements, and they may post results on a publicly accessible Web site. Noncompliance issues may range from administrative matters to exceedances of concentration, temperature, or flow limits. The exceedance of a parameter limit will trigger the permitting agency to review the history and magnitude of exceedance recurrences. Actions may include reviewing the permit for

appropriate parameter levels, setting a compliance schedule for the applicant, and, in a worst case scenario, withdrawing a permit and disallowing the legal ability to discharge.

Sanitary sewage wastes are treated before their release to the environment to minimize environmental impacts. The treatment may be through discharge to a municipal wastewater treatment system, an onsite wastewater treatment plant, or an onsite septic system. In cases where nonradioactive sanitary or other wastes cannot be processed by onsite wastewater treatment systems, the wastes are collected by independent contractors and trucked to offsite treatment facilities. Waste collection and offsite disposal can occur during a planned outage, when portable toilets may be required to accommodate the additional workforce. Water quality issues related to sanitary waste treatment include the adequacy of the wastewater treatment capacity for handling the increased flow and loading associated with operational changes to the plant, emission of phosphates from onsite laundries, suspended solids, coliform bacteria from sewage treatment discharges, and other effluents that cause excessive biochemical oxygen demand. State regulators are typically involved in site inspections, review of monitoring reports, and handling of any violations.

The control of biological pests is critical to maintaining optimum system performance and minimizing operating costs. Consequently, many nuclear power plant cooling systems are periodically treated with molluscides to control the Asiatic clam (*Corbicula fluminea*) and the zebra mussel (*Dreissena polymorpha*), which are generally found in the portions of the cooling system where water temperatures are ambient rather than heated.

Biocides also are commonly used in cooling towers, although they may also be used in once-through systems or cooling ponds (Veil et al. 1997). Discharge of these chemicals to the receiving body of water can have toxic effects on aquatic organisms. Chlorine is commonly used as a biocide at nuclear power plants and represents the largest potential source of chemically toxic release to the aquatic environment. It may be injected at the intake or targeted at various points (such as the condensers) on an intermittent or continuous basis. Chlorine gas, which was commonly used in the past, has been replaced by many users with other forms, such as bleach (sodium hypochlorite) (Veil et al. 1997). Bromide compounds have been used increasingly in recent years, either in place of or in addition to chlorine treatments. Non-oxidizing biocides used to control zebra mussels and other organisms include quaternary ammonia salts, triazine, glutaraldehyde, and other organic compounds.

Most plants have a storm water management plan, with the parameter limits of the storm water outfalls included in the NPDES permit. Plants may also have a spill prevention, control, and countermeasures plan that contains information on potential liquid spill hazards and the appropriate absorbent materials to use if a spill occurs.

3.5.2 Groundwater

Some nuclear power plants also use groundwater as a source of water for some of their operational needs. The rate of usage varies greatly among the plants. Many plants use groundwater only for the potable water system and require less than 100 gpm (0.006 m^3/s). At some plants, the original construction required dewatering of a shallow aquifer by using pumping wells or a drain system. Some plants operate dewatering systems to lower the groundwater table near buildings. This is accomplished either by pumping or by having footing drains along foundations. Groundwater may also be used for sanitary uses or landscaping, and it may undergo processing to be used for makeup or service water systems. Groundwater usage regulations vary considerably from State to State, and State allocation permits are typically required.

At the Grand Gulf plant in Mississippi, Ranney wells are used to withdraw groundwater along the Mississippi River at relatively high rates. Ranney wells are large-diameter wells with radial collector arms. They are installed in alluvial aquifers along rivers to obtain a mixture of groundwater and surface water through induced infiltration. At Grand Gulf, the average groundwater pumping rate by their well systems was higher than 21,000 gpm (1.3 m^3/s) in 2001 (System Energy Resources, Inc. 2005). The water withdrawn at Grand Gulf may be used as makeup, service, potable, or sanitary water or for landscaping or fire protection.

The quality of groundwater may be affected by water from nuclear power plant cooling ponds that has seeping into the underlying surficial aquifer. Activities at power plants typically include general industrial practices, such as the storage and use of hydrocarbon fuels (diesel and/or gasoline), solvents, and other chemicals. These practices have the potential to contaminate soil and groundwater, and, at some plants, this contamination has occurred. Examples from plant-specific SEISs include leakages or spills of gasoline (with methyl tertiary butyl ether, or MTBE) at fuel tank storage areas, spills of fuel at transfer or filling stations, solvent leakages from storage area drums, spilled or sprayed solvents, and underground line leaks of hydraulic oil or diesel fuel (NRC 2006b, 2007c). These incidents have involved regulatory oversight, with authority falling under State regulations for hydrocarbons and under RCRA for other chemicals.

Radionuclide releases, primarily tritium, to groundwater have become an issue in recent years because of incidents at the Indian Point, Braidwood, Callaway, Dresden, Byron, and Palo Verde plants (NRC 2007d). The NRC (2006c) has examined the issue and noted the leaks are generally not observable because they are underground and because many plants do not have on-site groundwater monitoring wells. Although the plants are not under any specific regulatory requirements to have on-site groundwater monitoring programs, they are required to perform surveys, evaluate, and document the event and the hazard of known spills or leaks of radioactive material. The NRC has reporting requirements based on the amount of radioactivity released; thus any large spills or leaks will be reported. Additionally it is important to note that

all plants are required to submit an annual report, which is publically available, to the NRC which summarizes the types and quantities of radioactive material released into the environment. In response to these groundwater events, the Nuclear Energy Institute (2007a), which represents the nuclear industry, committed to the NRC to have site-specific groundwater protection programs in place at each site by July 31, 2006. These programs cover the assessment of plant systems and components, site hydrogeology, and implementation of groundwater monitoring programs. To monitor the actions of the nuclear industry, the NRC updated its inspection procedure to include this issue as part of its routine radiological inspection at all nuclear power plants.

3.6 Ecology

A wide variety of ecological resources exist at and in the vicinity of operating nuclear power plants across the United States. This section presents an overview of those resources. Terrestrial resources (including wetlands and floodplains, which are transitional areas between terrestrial and aquatic systems), aquatic resources, and threatened, endangered, and protected species and essential fish habitat are discussed in Sections 3.6.1, 3.6.2, and 3.6.3, respectively. The effects of past activities, including construction and operations, and current operations at plant sites are summarized.

3.6.1 Terrestrial Ecology

Operating commercial nuclear power plants are located in 31 States across the continental United States. These power plants have been sited in a wide variety of terrestrial habitat types. For the purposes of this analysis, terrestrial ecological resources in the vicinity of nuclear power plants are described in terms of upland vegetation and habitats, floodplain and wetland vegetation and habitats, and wildlife. A discussion of threatened and endangered terrestrial species is provided in Section 3.6.3.1.

3.6.1.1 Upland Vegetation and Habitats

Terrestrial vegetation and habitats include habitats such as forests, grasslands, and shrublands. These habitats were affected by the initial construction of nuclear power plants, normal operations associated with nuclear power plants, and successional changes occurring within vegetation communities. In general, the level of land management varies by area at a nuclear power plant. See Section 3.2.1 for a general description of land use at a nuclear power plant.

Impacts on terrestrial vegetation and habitats can result from a number of activities or processes during normal operations at a nuclear power plant. Since startup of operations,

areas on the nuclear plant sites within the security fence have typically been maintained as modified landscapes, but they may also include disturbed early successional habitats, or areas of relatively undisturbed habitat. Maintenance of portions of the site by mowing and herbicide or pesticide application keeps the diversity of plant species at a reduced level. Native plant species are often replaced by cultivated varieties or weedy species tolerant of disturbance. Areas of the plant site outside the security fence may include natural areas, such as forest or shrubland, in various degrees of disturbance.

Terrestrial habitats near nuclear plants can be subject to radiological releases under normal plant operations. These habitats are exposed to small amounts of radionuclides that result from the deposition of particulates released from power plant vents during normal operations. Releases typically include noble gases (which are not deposited), tritium, isotopes of iodine, and cesium, and they may also include carbon-14, strontium, cobalt, and chromium. Exposure to these radionuclides results in a dose rate to terrestrial plants of much less than 0.1 rad/d (0.001 Gy/d).[(a)] This rate is considerably lower than 1.0 rad/d (0.01 Gy/d), which is the DOE guideline level for impacts on terrestrial plant species (DOE 2002). Radionuclides, such as tritium, and other constituents in cooling water systems, such as biocides, that enter shallow groundwater from cooling ponds can be taken up by terrestrial plant species.

Terrestrial habitats near plants with closed-cycle cooling water systems are subject to the deposition of cooling tower drift particulates (including salt); the deposition of water droplets on vegetation from drift; structural damage from freezing vapor plumes; and increased humidity from cooling towers and cooling ponds. Small amounts of particulates from cooling towers are dispersed over a wide area, with particulates from natural draft towers being dispersed over a larger area and at a lower deposition rate than those from mechanical draft towers (NRC 1996). However, most of the deposition from cooling towers occurs in relatively close proximity to the towers. Generally, deposition rates are below those that are known to result in measurable adverse affects to plants, and no deposition effects on agricultural crops or plant communities have been observed at most of the power plants. However, exceptions have been observed at some nuclear plants (NRC 1996). Impacts from icing, when they have occurred, have been minor and localized near cooling towers.

Effects of nuclear power plant operations on terrestrial habitats also include the effects of transmission line ROWs and their maintenance. ROWs through undeveloped areas contribute to habitat fragmentation and affect the distribution of species in undisturbed areas near the corridors. These effects may result in gradual, ongoing changes in the composition and diversity of species in these undisturbed areas. Plant communities in and along ROWs are maintained in a modified condition for safe and efficient operation of the transmission lines.

(a) Dose rates were calculated on the basis of media concentrations provided in nuclear power plant radiological monitoring reports (see Section D.5 in Appendix D).

ROW management typically includes the periodic cutting of tall woody vegetation and use of herbicides. Management activities and transmission line repair occasionally result in the erosion of exposed soils where vegetation is removed or where soils are disturbed by equipment. ROW corridors occasionally provide a means for the introduction or expansion of populations of invasive species.

3.6.1.2 Floodplain and Wetland Vegetation and Habitats

Floodplains occur as lowlands along rivers and coastlines near many nuclear plants. They are typically identified as areas that have a chance of at least 1 percent of flooding in any given year; these are also described as 100-year floodplains. Activities related to nuclear plant construction and operations that have occurred in floodplains include the construction and maintenance of cooling water intakes and outfalls and transmission line ROWs. Activities undertaken by Federal agencies are regulated under Executive Order 11988, *Floodplain Management*. One requirement of this order is for Federal agencies to restore and preserve the natural and beneficial values served by floodplains. Floodplain values include attenuation of the extent of flooding, which supports wetlands, fish, and wildlife.

Wetland Types That Occur near Nuclear Power Plants

- ***Riverine wetlands*** are contained within a channel that has moving water, at least periodically, and they lack persistent vegetation.
- ***Palustrine wetlands*** primarily support trees, shrubs, or persistent emergent plants, or they can be small (generally under 20 ac or 8 ha), shallow wetlands lacking such plant communities.
- ***Lacustrine wetlands*** are large or deep bodies of water that lack persistent vegetation.
- ***Estuarine wetlands*** occur near land with access to the ocean, are influenced by tides, and are diluted to a variable extent by freshwater.
- ***Marine wetlands*** are exposed to open ocean waves and currents and may be slightly diluted by freshwater.

Source: Cowardin et al. 1979

A wide variety of wetland types occur near nuclear power plants. These include riverine, palustrine, lacustrine, estuarine, and marine wetland types as described by the U.S. Fish and Wildlife Service (USFWS) (Cowardin et al. 1979) for the National Wetlands Inventory (NWI). Most nuclear plants have wetlands nearby (within a radius of 5 mi), and wetlands cover an average of 3 percent of the land area near the plants, as mapped by the NWI (USFWS 2007a). The National Land Cover Database (USGS 2007) and New Jersey State database were used for the sites that were lacking digital NWI data. Wetlands exclude deepwater habitats, which are permanently flooded coastal areas and which occupy, on average, 10 percent of the area within 5 mi of the plants. The proportion of wetlands and deepwater habitats within 5 mi (8 km) of nuclear plants is presented in Table D.5-3 in Appendix D.

Wetlands were affected by the initial plant construction and various aspects of plant operation during the period of the initial plant operating license. These effects included those associated with facility construction, transmission line ROW construction and maintenance, the construction and operation of cooling systems, and storm water management. Effects to wetlands from construction activities and storm water runoff often include changes in vegetative plant community characteristics, altered hydrology, decreased water quality, and sedimentation (Wright et al. 2006; EPA 1996). Wetland losses occurred during the construction of many nuclear power plants. For example, construction of the Oyster Creek plant in New Jersey resulted in the loss of 200 acres of several types of wetlands (AEC 1974). However, at plants using cooling ponds, new wetland habitats may form along the margins of those ponds such as can be found along portions of the Robinson Reservoir, the H.B. Robinson nuclear plant cooling pond (NRC 2003b), and Parr Reservoir used for storage exchange and makeup water for the Summer plant cooling pond (NRC 2004b). Forested wetlands in ROWs are converted to scrub/shrub or emergent wetland types when trees are removed, and ROW management programs maintain the ROW in these habitat types. The operation of heavy equipment in wetlands during ROW maintenance or transmission line repair can damage or compact wetland soils and vegetation and may promote the establishment of invasive species (BPA 2000).

The operation of cooling water intake and discharge systems can increase the salinity of stream segments, as has occurred at the Oyster Creek plant (NRC 2007c), or expose wetland habitats to thermal impacts and contaminants in discharged cooling water or cooling tower blowdown. The maintenance of intake or discharge structures may damage wetland habitats, and the disposal of dredged sediments may affect wetlands. Maintenance activities on the plant sites or ROWs may also result in chemical or fuel spills that may affect wetlands. Contaminants that enter groundwater may affect wetlands that receive groundwater discharge. Executive Order 11990, *Protection of Wetlands*, requires Federal agencies not only to minimize the destruction, loss, or degradation of wetlands while they are conducting their activities but also to preserve and enhance the natural and beneficial values of wetlands. Many activities that occur in wetlands are regulated under Section 404 of the Clean Water Act (CWA). Actions that result in the discharge of dredge or fill material into wetlands that are under the jurisdiction of the CWA require a permit from the U.S. Army Corps of Engineers (USACE).

3.6.1.3 Wildlife

Wildlife populations on and in the vicinity of nuclear power plants have also been affected by plant construction and operations. The initial construction of the plants and transmission line ROWs reduced the available terrestrial habitat at sites; habitat losses in many cases total hundreds of acres. Because habitats along transmission line ROWs are maintained in a modified condition, the wildlife communities they support are different than those found in undisturbed habitats. Some predator species, such as skunks and raccoons, more readily use ROW habitats, and ROWs may therefore provide a means for new or easier access to some

areas, thereby affecting populations of prey species (Evans and Gates 1997; Crooks and Soulé 1999). Wildlife species in the vicinity of transformers or cooling towers are exposed to elevated noise levels that disrupt behavior patterns. Wildlife species near transmission lines are exposed to electromagnetic fields. However, there is currently a lack of conclusive evidence that biological systems are affected by electromagnetic fields (see Section 3.9.4). Atmospheric or surface water releases can result in the exposure of wildlife to contaminants. Wildlife is exposed to small amounts of radionuclides from the deposition of particulates released from power plant vents during normal operations. Exposure of upland and riparian wildlife to these radionuclides results in a dose rate of much less than 0.1 rad/d (0.001 Gy/d), which is the guideline for protection of riparian and terrestrial wildlife (DOE 2002).[(a)] This rate is considerably lower than rates known to result in measurable impacts.

Natural draft cooling towers and transmission lines create collision hazards for migratory and local bird species. Monitoring of bird collisions has been done at several nuclear plants with natural draft cooling towers. The results of those monitoring efforts indicate that cooling towers at nuclear power plants do cause some collision mortality for migrating songbird species; however, these deaths represent only a fraction of the total annual bird collision mortality from all man-made sources. See Section 4.6.1.1 for a detailed description of bird collision mortality at nuclear power plants.

There are no reports of relatively high collision mortality occurring at the transmission lines associated with nuclear power plants in the United States. The length of these lines is considerably less than the total 500,000 mi (800,000 km) of transmission lines estimated within the United States (Manville 2005). Although the data are not available, transmission lines associated with nuclear power plants are likely responsible for only a small fraction of total bird collision mortality associated with transmission lines nationwide. See Section 4.6.1.1 for a detailed description of bird collision mortality at nuclear power plants.

Cooling system intakes can create an impingement hazard for waterfowl, and water demands for cooling can create water-use conflicts with wildlife. At the Nine Mile Point plant in New York, for example, approximately 100 greater scaup (*Aythya marila*) and lesser scaup (*Aythya affinis*) ducks were impinged at the cooling water intake structure in 2000 (NRC 2006d).

Species that occupy onsite habitats are exposed to a variety of factors associated with plant operations and maintenance. The maintenance required for landscaped areas generally keeps the diversity of wildlife located there less than it is in surrounding habitats. Wildlife species occurring on the sites within the security areas are typically limited by the low quality of the habitat and generally include common species adapted to industrial developments.

(a) Dose rates were calculated based on information provided in nuclear power plant radiological monitoring reports (see Section D.5 in Appendix D).

3.6.2 Aquatic Ecology

Nuclear power plants are usually located near relatively large water bodies, such as major rivers and reservoirs, the Great Lakes, and estuarine and marine coastal areas, because of the amount of water that is needed to meet cooling system demands (Table 3.1-2). In the few cases where a power plant is located near small streams (e.g., the Summer plant in South Carolina and the Clinton plant in Illinois), the streams have been impounded to create cooling lakes. The water bodies in the vicinity of the power plants contain a complex assemblage of habitats and species that may be affected by a plant's cooling system and by maintenance of the transmission line ROWs. The following text presents an overview of the habitats and aquatic biota in the vicinity of nuclear power plants, followed by an overview of the effects of existing power plant operations on aquatic resources.

3.6.2.1 Description of Aquatic Resources near Nuclear Power Plants

This section presents an overview of the aquatic habitats and biota that occur in the vicinity of nuclear power plants. Emphasis is placed on the major ecosystem types (i.e., freshwater rivers, reservoirs, and lakes and coastal estuarine and marine systems) and major groups of aquatic biota (i.e., fish, other aquatic vertebrates, macroinvertebrates, zooplankton, phytoplankton, and macrophytes). An overview of the effects of existing power plant operations on aquatic resources is provided in Section 3.6.2.2. A discussion of threatened and endangered aquatic species, marine mammals, and essential fish habitat is provided in Section 3.6.3.2.

3.6.2.1.1 Aquatic Habitats

The aquatic ecological communities that occur in the vicinity of U.S. nuclear power plants are very diverse because of the differences in their geographies and habitat types and in the physical and chemical conditions of the water bodies located near them. The geographical setting, physical conditions (e.g., substrate type, temperature, turbidity, and light penetration), chemical factors (e.g., dissolved oxygen levels and nutrient concentrations), biological interactions (e.g., competition and predation), seasonal influences, and man-made modifications and actions all interact to influence the types of species present and the nature of the aquatic community in a particular aquatic ecosystem. Nuclear plants use freshwater, estuarine, and marine ecosystems as their cooling water sources, except for the Palo Verde plant, which uses Phoenix City sewage effluent (Table 3.1-2).

Freshwater systems can be broadly categorized as lentic or lotic, depending on the degree of water movement. Lentic systems refer to water bodies that have standing or slow-flowing water, such as that found in ponds, lakes, reservoirs, and some canals. Most lentic habitats stratify during summer (monomictic) or during summer and winter (dimictic). Lotic habitats generally have a measurable velocity and include natural rivers and streams and also some artificial waterways. Most lotic habitats do not generally stratify (Morrow and Fischenich 2000). Although some freshwater aquatic species occur in both lentic and lotic habitats, many species are adapted to the physical, chemical, and ecological characteristics of one system or the other, and the overall ecological communities present within these aquatic ecosystem types will differ for a given region of the country.

Aquatic Ecosystem Types

- ***Freshwater:*** Waters that contain a salt concentration of less than 1 percent.
  - ***Lentic:*** Standing or slow-flowing fresh water (e.g., lakes and ponds).
  - ***Lotic:*** Flowing fresh water with a measurable velocity (e.g., rivers and streams).
- ***Marine:*** Waters that contain a salt concentration of about 3 percent (e.g., ocean overlying the continental shelf and associated shores).
- ***Estuarine:*** Coastal bodies of water, often semi-enclosed, which have a free connection with marine ecosystems (e.g., bays, inlets, lagoons, and ocean-flooded river valleys). In these areas, freshwater merges with marine waters; salinity concentrations vary spatially and temporally due to location and tidal activity.

Species composition and ecological conditions within riverine environments are largely determined by the geographic area, gradient of the river bed, velocity of the current, and source of nutrients and organic matter at the base of the food chain. Thus, ecological communities in rivers become altered if the river is impounded, with the degree of alteration depending on the degree to which various physical and chemical conditions are affected. Environmental threats to rivers include depletion of water, dams that alter flow and temperature characteristics and can block the upstream or downstream movement of aquatic organisms, chemical pollution, and the introduction of nonnative species. For example, the USFWS was concerned that a pond created by damming Oyster Creek to supply a source of water for fighting fires at the Oyster Creek plant in New Jersey could impede the movement of migratory species, such as the American shad (*Alosa sapidissima*) or American eel (*Anguilla rostrata*) (NRC 2007c).

Major rivers that serve as cooling water sources include the Mississippi River (Minnesota, Illinois, Mississippi, and Louisiana; six plants), Missouri River (Nebraska and Missouri; three plants), Susquehanna River (Pennsylvania; three plants), Delaware River (New Jersey; two plants), Hudson River (New York; one plant), and Columbia River (Washington; one plant) (Table 3.1-2). Some power plants that use rivers for cooling are located on sections of rivers that have been impounded to slow the rate of flow and create pooled areas in the vicinity of

cooling water withdrawal or discharge structures. These sections are not as clearly lentic in nature as are reservoirs.

Lentic ecosystems can be broadly divided into littoral, pelagic, and profundal habitat zones on the basis of water depth and light penetration in the water. Littoral habitats refer to nearshore shallower waters where sufficient light reaches the bottom so that rooted plants are able to grow. Pelagic habitats include open offshore waters where light intensity is great enough for photosynthesis to occur. Profundal habitats are found in deep-water areas that are beyond the depth at which light penetration is great enough to support photosynthesis (Armantrout 1998). The ecological communities that inhabit these zones differ, reflecting the preferences and tolerances of aquatic species at various life stages for the physical and chemical conditions that exist. Within the United States, 10 nuclear power plants use water from natural lakes for cooling (Table 3.1-2): Lake Erie (Ohio and Michigan; three plants), Lake Michigan (Michigan and Wisconsin; four plants), and Lake Ontario (New York; three plants).

The species diversity and biomass of fish are greater in the nearshore than in the offshore areas of the Great Lakes (Edsall and Charlton 1997). The nearshore areas offer a variety of habitat conditions (e.g., morphometric features, current velocities, substrates, and aquatic vegetation) that provide conditions that are optimal to most species of fish in the Great Lakes for at least some portion of their life cycle. Of 139 Great Lakes fish species reviewed by Lane et al. (1996, as reported in Edsall and Charlton [1997]), all but five species (four species of deepwater ciscoes [*Coregonus* spp.] and the deepwater sculpin [*Myxocephalus thompsoni*]) use waters less than 33 ft (10 m) deep for nursery habitat. Some of the threats to the ecological integrity of the Great Lakes are reviewed in Beeton (2002); they include eutrophication (nutrient enrichment), land-use changes, overfishing, invasive species, and pollution (Beeton 2002). Constraints have been implemented in recent years to reduce nutrient inputs and control land use changes, such as shoreline alteration and destruction of wetlands. Invasive species have become a major problem as nonindigenous species gain access to the Great Lakes. Examples of invasive nonnative aquatic organisms that have become established in the Great Lakes include the round goby (*Neogobius melanostomus*), zebra mussel (*Dreissena polymorpha*), spiny waterflea (*Bythotrephes cederstroemi*), and quagga mussel (*Dreissena bugensis*). The introduction of such species can result in changes to native ecological communities (Dermott and Kerec 1997). These threats to the integrity of the Great Lakes are likely to continue (Beeton 2002).

Reservoirs refer to areas of rivers or streams that are impounded by a dam or water control structure such that they have become physically, chemically, and ecologically more similar to lakes instead of the lotic system from which they are formed (Armantrout 1998). In the United States, 14 nuclear power plants use water from reservoirs for cooling (Table 3.1-2). Fish species that thrive in the habitat conditions that exist within a given reservoir are often stocked and managed to support recreational fisheries.

Brackish to saltwater estuarine and marine ecosystems occur along the coastlines of the United States. General habitat types found within these ecosystems include the mouths of rivers, tidal streams, shorelines, salt marshes, beaches, mangroves, submerged aquatic vegetation, coral reefs, and open water. Estuaries are particularly important as staging points during the migration of certain fish species (e.g., salmon and eels), giving them time to form schools and to physiologically adjust to the changes in salinity. Many marine fish and invertebrate species use estuaries for spawning or as places where young fish can feed and grow before moving to other marine habitats. Estuarine and marine habitats support important commercial or recreational finfish and shellfish species. In the United States, 16 nuclear power plants use water from estuarine or marine environments (Table 3.1-2).

3.6.2.1.2 Aquatic Organisms

A great diversity of aquatic organisms could be affected by nuclear plant operations. Power plant effects can be analyzed by studying representative important species (e.g., indicator species or species groups). McLean et al. (2002) identified the following representative important species:

- Species sensitive to adverse harm from plant operations (e.g., thermally sensitive species);
- Species that use the local area for spawning or nursery grounds (including those species that migrate past the plant to spawn);
- Species of commercial or recreational value;
- Species that are habitat formers and critical to the functioning of the local ecosystem;
- Species that are important links in the local food web;
- Rare, threatened, or endangered species; and
- Potential nuisance species likely to be enhanced by plant operations.

Fish

Fish can be characterized as freshwater, estuarine, marine, and migratory (e.g., anadromous and catadromous) species. The first three categories are based on salinity regimes, whereas the migratory category is composed of reproductively specialized fish that migrate between freshwater and saltwater (or vice versa) to reproduce (Murdy et al. 1997). Murdy et al. (1997)

defined freshwater fish as those that usually inhabit waters with a salinity of less than 0.5 parts per thousand (ppt) (although some species can tolerate a salinity as high as 10 ppt); estuarine fish as those that inhabit tidal waters with salinities that range between 0 and 30 ppt; and marine fish as those that typically live and reproduce in coastal and oceanic waters with salinities that are more than 30 ppt. Anadromous species migrate from the ocean waters to freshwater to spawn, while the opposite situation occurs for catadromous species. Anadromous species include sturgeons, clupeids, salmonids, smelts, striped bass (*Morone saxatilus*), and the sea lamprey (*Petromyzon marinus*). Within the United States, the only catadromous species is the American eel. For some species, migratory movements may be confined within a freshwater system (e.g., species tend to move to upstream areas for spawning) or in the ocean (e.g., species tend to move northward as waters warm and southward as they cool). A few species such as the tarpon (*Megalops atlanticus*) move freely between fresh and marine waters for purposes not related to spawning (Lagler et al. 1962). Many of the fish species that occur in the vicinity of the power plants are of considerable commercial and/or recreational importance, while others serve as forage for those species.

Fish have developed various regulatory mechanisms to maintain their overall performance at a wide range of body temperatures as a result of being subjected to large diurnal or seasonal changes in water temperature (Claireaux et al. 2006). Nevertheless, freshwater fish can be classified as coldwater, coolwater, or warmwater species. Coldwater fish (e.g., trout and salmon) have an upper lethal temperature of about 77°F (25°C), warmwater species (e.g., gizzard shad [*Dorosoma cepedianum*], common carp [*Cyprinus carpio*], largemouth bass (*Micropterus salmoides*], and sunfish [*Lepomis* spp.]) have an upper lethal limit as high as 97°F (36°C), and coolwater species have upper lethal temperature limits similar to or slightly lower than those of warmwater species (e.g., freshwater drum [*Aplodinotus grunniens*], yellow perch [*Perca flavescens*], smallmouth bass [*Micropterus dolomieu*], walleye [*Sander vitreus*], and sauger [*S. canadensis*]), but they usually require cooler average temperatures during their growing season (Morrow and Fischenich 2000). Preferred summer temperatures are below 59°F (15°C) for coldwater species, 70 to 77°F (21 to 25°C) for coolwater species, and 81 to 88°F (27 to 31°C) for warmwater species (Magnuson et al. 1979). As summarized by Armour (1991), the highest average mean weekly temperatures tolerated by coldwater, coolwater, and warmwater fish species are 72°F (22°C), 84°F (29°C), and 86°F (30°C); while their respective spawning temperatures are less than 55°F (12.8°C), 40 to 60°F (4.4 to 15.6°C), and above 60°F (15.6°C).

The swimming performance of fish is influenced by temperature. Maximum swimming speed and endurance peak at an optimum temperature, are reduced at low temperatures, and decrease as temperatures approach the upper thermal limit (Claireaux et al. 2006). Many of the marine fish species have buoyant eggs, while most stream fish have eggs that are heavy and sink (demersal). Most demersal eggs are also, at least temporarily, adhesive (Lagler et al. 1962). Most marine fish species have high fecundity (e.g., a female may produce

thousands to millions of eggs per year); while most freshwater fish produce hundreds to thousands of eggs per year. However, newly hatched larvae undergo mortality rates of 5 to 30 percent per day as a result of predation, starvation, disease, pollution, and other causes (Batty and Blaxter 1992).

Other Aquatic Vertebrates

In addition to fish, other vertebrate species can be present in the aquatic ecosystems near nuclear plants. These include sea turtles, American crocodile (*Crocodylus acutus*), waterfowl, seals, and the West Indian manatee (*Trichechus manatus*). The effects that power plant operations have had on these species are discussed in Section 4.6.1.2.

Aquatic Macroinvertebrates

Aquatic macroinvertebrates include a diverse range of taxa, including immature and adult insects, crustaceans, mollusks, and worms. They can occur on a variety of substrates, plants, debris, and submerged portions of manmade structures and within the water column (Fremling and Drazkowski 2000). Macroinvertebrates control key ecosystem processes, such as primary production, decomposition, nutrient regeneration, water chemistry, and water clarity. High densities of macroinvertebrates can be attained, as exemplified by midge (Chironomidae) larvae – 4650/ft^2 (50,000/m^2); Asiatic clams (*Corbicula fluminea*) – 2325/ft^2 (25,000/m^2); and zebra mussels (*Dreissena polymorpha*) – 46,500/ft^2 (500,000/m^2) (GSMFC 2005; Pennak 1953; Sprecher and Getsinger 2000).

Mussels are planktivores and are prey items for some fish and other vertebrates. They depend on good water quality and physical habitat conditions and on an environment that will support populations of their host fish species. Williams et al. (1993) reported the nearly 300 native freshwater mussels in the United States and Canada, nearly 72 percent are considered endangered, threatened, or of special concern; almost 5 percent are of undetermined status; and less than 24 percent are considered stable. Mussels occur in the vicinity of most plants that use freshwater as a cooling water source.

In addition to native freshwater mussels, several species of mussels and clams have been introduced to the United States and have reached nuisance levels. Most notable among these are the Asiatic clam and the zebra mussel. These species can alter trophic and nutrient dynamics of aquatic ecosystems and displace native mussels. The ability of Asiatic clams and zebra mussels to clog water systems makes them a serious and costly problem for utilities (Morgan et al. 2003). Densities of zebra mussels can be as high as 78,000/ft^2 (840,000/m^2) in utility water pipes (IDNR undated). Many of the nuclear plants have programs in place to monitor for these species, and, as appropriate, to control them, usually using biocides.

Zooplankton

Zooplankton is the animal component of the plankton community and includes protozoans, crustaceans, and the drifting larvae of fish and macroinvertebrates. Rotifers, cladocerans, and copepods are primary components of the zooplankton community in freshwater ecosystems. The zooplankton of estuarine and marine ecosystems include eggs, larvae, juveniles, and/or adults of anemones, jellyfish, bristleworms, sea urchins, starfish, copepods, isopods, amphipods, shrimp, crabs, lobsters, bryozoans, and mollusks. Ichthyoplankton (fish eggs and larvae) are a seasonal component of the zooplankton in all aquatic ecosystems. Zooplankton is an important link between phytoplankton and fish or other secondary consumers.

Phytoplankton and Aquatic Macrophytes

Phytoplankton is an important food source for some invertebrate and fish species and is important for carbon fixation (converting carbon dioxide to organic materials via photosynthesis). Periphyton (algae attached to solid submerged objects) includes species of diatoms and other algae that grow on natural or artificial substrates. These species can become planktonic as a result of scouring or other actions that separate individuals from their substrate. Components of the phytoplankton include green algae (Chlorophyta), bluegreen algae (Cyanophyta), and golden brown algae (Chrysophyta). Brown algae and kelp (Phaeophyta) and red algae (Rhodophyta) also occur in marine waters. Diatoms (Bacillariophyta) are a major component of the phytoplankton in many aquatic systems. Macrophytes can stabilize sediments, act as important links in nutrient cycling, provide shelter and protection for animal communities, and provide important nursery areas (Hall et al. 1978). Factors that affect the distribution and condition of submersed aquatic vascular plants include weather and hydrology, sedimentation, suspended solids and water clarity, and consumption and disturbance by fish and wildlife (USGS 1999).

3.6.2.2 Overview of the Effects of Existing Nuclear Plant Operations and Transmission Lines on Aquatic Resources

During the initial license period, the operations of nuclear plants had effects on aquatic resources. The withdrawal of cooling water affected aquatic organisms by means of impingement and entrainment. Impingement occurs when organisms (e.g., fish, shellfish [e.g., shrimp, crabs, and crayfish], and, more rarely, sea turtles, birds, and marine mammals) are held against the intake screen or netting placed within intake canals. Entrainment occurs when smaller organisms (e.g., phytoplankton, zooplankton, and the planktonic eggs and larvae of fish and shellfish) pass through the intake screens and travel through the entire condenser cooling system. Aquatic organisms that might otherwise avoid impingement by swimming away may enter and become entrapped in enclosed cooling water intake canals that hinder escape.

Impingement

Impingement is the entrapment of all life stages of fish and shellfish on the outer part of an intake structure or against a screening device during periods of water withdrawal (40 CFR § 125.83).

Entrainment

Entrainment is incorporation of all life stages of fish and shellfish with intake water flow entering and passing through a cooling-water intake structure and into a cooling water system (40 CFR § 125.83).

Temperature can have an effect on most biochemical, physiological, and life history activities of aquatic organisms (Beitinger et al. 2000). Thermal effects on aquatic biota can result from heat shock; cold shock; interference with fish migration; premature emergence of aquatic insects; enhanced susceptibility to parasitism, predation, and disease; stimulation of nuisance organisms; gas bubble disease; and lower dissolved oxygen level (NRC 1996). Nuclear power plants also affect aquatic organisms through thermal and chemical releases (NRC 1996). In addition, radionuclides are released into aquatic systems. Radionuclides can be environmentally significant as they have a strong tendency to adsorb onto particles (e.g., suspended and settled solids), can accumulate in biological organisms, or can be concentrated through trophic transfers (Jones and McLean 2005).

Thermal Shock

Heat Shock: Acute thermal stress caused by exposure to a sudden elevation of water temperature that adversely affects the metabolism and behavior of an organism and can lead to its death.

Cold Shock: Acute thermal stress caused by exposure to a sudden decrease of water temperature that adversely affects the metabolism and behavior of an organism and can lead to its death.

The impact from any type of power plant on aquatic resources can be difficult to determine because biotic populations also respond to changes in environmental conditions (EPA 2002).

Table 3.6-1 lists various characteristics of power plants, water bodies, and aquatic species that influence the effects of impingement, entrainment, or thermal or chemical discharge on aquatic resources.

Table 3.6-1. Factors That Influence the Impacts of Nuclear Power Plant Operation on Aquatic Resources

Power Plant Factors	Ecosystem Factors
• Intake and discharge location (e.g., distance from shoreline and to each other) and type (e.g., size and operation) • Intake depth and approach velocities • Proximity to areas of biological concern (e.g., spawning and rearing habitats) • Fish protection technologies (e.g., intake screen design, fish diversion/avoidance systems, screen wash return systems) • Timing, duration, frequency, and quantity of water withdrawal • Ratio of cooling water intake to source water flow • Water temperature change and duration in cooling system • Biocide use • Corrosive potential of condenser tubing • Type of cooling system (e.g., once through, combination cycle, closed cycle, cooling lake, or canal) • Thermal plume characteristics (e.g., cross-sectional area of elevated discharge temperatures)	***Abiotic Factors*** • Type of water body (e.g., riverine, lacustrine, estuarine, marine) • Ambient water temperatures • Ambient water quality (e.g., salinity, dissolved oxygen, pollutant levels) • Current or tidal conditions • Direction and rate of ambient flows ***Biological Factors*** • Spatial and temporal distributions • Abundance or density • Habitat preference • Ability to detect and avoid intake • Swimming speeds • Body size • Age and developmental stage • Physiological tolerance (e.g., temperature, dissolved oxygen, and salinity) • Reproductive strategy • Mode of egg and larval dispersal • Generation time • Condition and health

Source: EPA 2002; NRC 1996

Chemical effects on aquatic biota can occur from exposure to biocides and other contaminants (e.g., heavy metals such as copper, zinc, and chromium that may be leached from condenser tubing and other heat exchangers). Blowdown from closed-cycle cooling systems can contain concentrated levels of constituents present in the makeup water, residual biocides, process contaminants, and other chemicals added for controlling corrosion or deposits (Veil et al. 1997).

Radionuclides are released to aquatic systems at or below permitted levels at nuclear power plants.

3.6.3 Threatened, Endangered, and Protected Species and Essential Fish Habitat

A variety of Federal and State Acts protect certain species and habitats. Federally listed threatened and endangered species are protected under the Endangered Species Act of 1973, while State-listed species are protected under provisions of various State regulations. Prior to the initial construction of the power plants and transmission line ROWs built after 1973, the NRC consulted with the U.S. Fish and Wildlife Service (USFWS) to determine the presence of any Federally listed species or critical habitat at or near sites and assess the potential for impacts from the construction and operation of plants or associated transmission lines. Before the Endangered Species Act was enacted, consultation was not required; however, species or habitats that were rare were often considered in project planning. Any ongoing or proposed activity associated with the operation or maintenance of existing nuclear power plants during the license renewal term that has the potential to affect a listed species requires the initiation of consultation under Section 7 of the Endangered Species Act with the USFWS for terrestrial and freshwater species or the National Marine Fisheries Service (NMFS) for offshore and migratory species. Federally managed marine and anadromous fishery resources, including essential fish habitat, are protected under the Magnuson-Stevens Fishery Conservation and Management Act (Magnuson-Stevens Act; 16 USC 1801 *et seq.*). Marine mammals are offered protection under the Marine Mammal Protection Act (MMPA; 16 USC 1361 *et seq.*), which establishes a Federal responsibility to conserve marine mammals. Both of these regulations are administered by the NMFS.

Terms Related to Threatened, Endangered, and Protected Species and Habitats

- ***Endangered Species:*** Animal or plant species in danger of extinction throughout all or a significant portion of its range.
- ***Threatened Species:*** Animal or plant species likely to become endangered within the foreseeable future throughout all or a significant portion of its range.
- ***Candidate Species:*** Animal or plant species for which the USFWS or NMFS has on file sufficient information on vulnerability and threats to support a proposal to list it as endangered or threatened.
- ***Proposed Species:*** Animal or plant species that is proposed in the *Federal Register* to be listed under Section 4 of the Endangered Species Act.
- ***Critical Habitat:*** Specific geographic areas, whether occupied by a listed species or not, that are essential for its conservation and that have been formally designated by rule published in the *Federal Register*.
- ***Essential Fish Habitat:*** Those waters and substrates needed by Federally managed marine and anadromous fish for spawning, breeding, feeding, or growth to maturity.

Many listed species occur in the vicinity of U.S. commercial nuclear plants. Sackschewsky (1997) reported that there were 484 Federally listed threatened, endangered, proposed, or candidate species potentially occurring near one or more of the 75 nuclear reactor sites (including sites that have now been shut down or decommissioned). In a follow-up report, 452 species[(a)] were identified at 63 sites for which data were available (the Pilgrim and Seabrook plants were not included); critical habitat for 18 species was identified near the facilities (Sackschewsky 2004). The number of species by taxonomic group is given in Table 3.6-2. Although a number of species were identified for most nuclear plants, the probability of occurring at sites was considered low for most species. At the time of the study, there were 59 known occurrences of listed species on nuclear plant sites. Some of the known or potentially occurring species may have been affected by the construction and subsequent operation of the plants, with effects similar to those described in Sections 3.6.1 and 3.6.2.

Table 3.6-2. Number of Endangered Species Act-Listed Species That Could Occur near Operating Nuclear Power Plants

Taxonomic Group	No. of Species
Plants	218
Clams	58
Snails	12
Crustaceans	8
Insects and arachnids	16
Fish	44
Amphibians	9
Reptiles	21
Birds	32
Mammals	34
Total	452

Source: Sackschewsky 2004

(a) Five species that were included in this report have been removed from the list of threatened and endangered species: the Arizona agave (*Agave arizonica*), bald eagle (*Haliaeetus leucocephalus*), cactus ferruginous pygmy-owl (*Glaucidium brasilianum cactorum*), Eggert's sunflower (*Helianthus eggertii*), and gray wolf (*Canis lupus*) in the western Great Lakes and Minnesota.

The USFWS maintains a threatened and endangered species system (TESS) Web site (USFWS 2007b) for all Federally listed species (as well as proposed and candidate species), which has lists organized by state, taxonomic group, species with critical habitats and recovery plans, and so forth.

3.6.3.1 Terrestrial Threatened, Endangered, and Protected Species

Nuclear plants known to support listed terrestrial species on the site or along transmission line ROWs generally maintain monitoring programs to identify changes in populations or report impacts to the USFWS and State agencies. Factors that could affect listed terrestrial species include construction-related habitat loss, cooling tower drift, operation and maintenance of cooling systems, transmission line ROW maintenance, avian collisions with cooling towers and transmission lines, exposure to radionuclides, and site operations and maintenance.

In cases where there have been concerns regarding potential impacts on listed species from plant operation, mitigation has been implemented. For example, the bald eagle (*Haliaeetus leucocephalus*), which was listed by the USFWS as a threatened species until August 2007, occurs near many nuclear plants and nests near the Monticello plant in Minnesota; one nest is located on one of its transmission towers. Flight diverters were installed on transmission lines associated with the Monticello plant to reduce the potential for avian collisions, thereby reducing the likelihood of impacts on bald eagles (NRC 2006f). At the Calvert Cliffs plant in Maryland, restrictions are placed on activities (such as timber harvest) within 0.4 km (0.25 mi) of active bald eagle nests. The cooling canals at the Turkey Point plant in Florida support a breeding population of the American crocodile (*Crocodylus acutus*). The cooling canal system, including freshwater ponds between canals, is managed to provide suitable habitat for all life stages of the crocodile (NRC 2002b).

Listed plant species occur along transmission line ROWs associated with many of the nuclear plants. The open canopy maintained in the ROWs provides habitat conditions required by many of these species. However, these species could be adversely affected by ROW management or line maintenance activities. Individuals could be affected by mowing, cutting, equipment or vehicle operation, and herbicide applications. Many nuclear plants have developed ROW management programs in cooperation with the USFWS or State resource agency. Management activities are designed to avoid impacts on these species and maintain habitat conditions conducive to the survival of these populations. For example, at the Brunswick Nuclear Plant in North Carolina, the golden sedge (*Carex lutea*), Cooley's meadowrue (*Thalictrum cooleyi*), and rough-leaf loosestrife (*Lysimachis asperulaefolia*), all listed by the USFWS as endangered, occur within transmission line ROWs. These populations are managed in cooperation with the State of North Carolina, and vegetation management practices have been adopted to protect these species (NRC 2006e).

ROW management efforts at the St. Lucie plant in Florida provide and maintain habitat for the Florida scrub jay (*Aphelocoma coerulescens*) and other species that prefer open shrubby habitat (NRC 2003a). A small number of bald eagles were killed by collisions with the Rock Creek transmission line associated with the Quad Cities plant in Illinois, at the Mississippi River crossing; however, the impact on the local population was considered small (NRC 2004c).

3.6.3.2 Aquatic Threatened, Endangered, and Protected Species, Marine Mammals, and Essential Fish Habitat

The potential for Federally and State-listed aquatic species to occur in the vicinity of specific nuclear power plants depends on the distribution and habitat preferences of the listed species and the specific water bodies and habitat types that are present on or near the power plant. Species that occur in aquatic habitats with enough water to support power plant cooling water needs (e.g., large rivers and lakes, estuaries, and inshore marine areas) are more likely to be affected by power plant operations than species that occur in smaller bodies of water that would not be capable of providing sufficient cooling water (EPA 2002). Listed aquatic species would generally be considered less likely to be present in constructed habitats, such as cooling ponds, that historically would not have provided suitable habitat and that do not provide ready connections to more natural habitats from which colonization or immigration could occur.

Examples of listed freshwater fish species that have been identified as occurring in the vicinity of nuclear power plants include the pallid sturgeon (*Scaphirhynchus albus*), which occurs in the Missouri River near the Fort Calhoun plant in Nebraska (NRC 2003c), and the Neosho madtom (*Noturus placidus*), which may inhabit streams in the immediate vicinity of the Wolf Creek plant in Kansas (Sackschewsky 2004). None of the operating nuclear power plants or their transmission lines are located in areas designated as critical habitat under the Endangered Species Act for Federally listed aquatic species.

North America has the highest diversity of freshwater mussels in the world, Williams et al. (1993) reported that about 72 percent of North American mussel species are considered endangered, threatened, or of special concern as a result of habitat destruction and reduced water quality (Williams et al. 1993). This high percentage of imperiled species is reflected in the large numbers of listed mussel species that could occur in the vicinity of nuclear power plants that obtain cooling water from freshwater aquatic habitats. Sackschewsky (2004) identified 32 nuclear plants where listed mussel species could occur. There was the potential for more than 20 listed mussel species to occur in the immediate vicinity of three of these plants (Browns Ferry, Sequoyah, and Watts Bar) (Sackschewsky 2004).

A number of listed fish, shellfish, and sea turtles occur in the vicinity of nuclear plants located on estuaries and marine habitats. Some marine mammals (e.g., seals and the West Indian manatee), which, depending on the species, may be protected under Endangered Species Act

Section 7 or under the MMPA, occur in the vicinity of some coastal plant sites. Federally listed estuarine and marine fish species that are known to occur in the vicinity of nuclear plants include shortnose sturgeon (*Acipenser brevirostrum*) and smalltooth sawfish (*Pristis pectinata*). Although the West Indian manatee occurs in the vicinity of the Turkey Point plant in Florida, it has not been found in the cooling water canals and is considered unlikely to be affected by operations of the plant (NRC 2002b). The West Indian manatee also occurs in the vicinity of the Crystal River plant in Florida, and in the heated effluent of other non-nuclear power plants in Florida (Laist and Reynolds 2005).

In addition to those marine mammals protected under the Endangered Species Act, marine mammals are also protected under the MMPA. The MMPA gives the NMFS the responsibility for managing cetaceans (porpoises and whales) and pinnipeds (seals, fur seals, and sea lions). The USFWS is responsible for managing all other marine mammals, including the sea otter, walrus, polar bear, dugong, and manatee. The MMPA prohibits, with certain exceptions, the "take" (i.e., harming) of marine mammals in U.S. waters. Concerns about the potential impacts of nuclear power plants on marine mammals have been expressed for only a small number of plants, and typically, intake structures and discharge systems are modified to reduce the potential for harming marine mammals. In cases where there is a potential for small numbers of marine mammals to be inadvertently affected by plant operations, the NMFS or the USFWS may allow the unintentional take of up to a certain number of individuals. For example, a letter of authorization under the MMPA has been issued by the NMFS for the unintentional take of small numbers of seals incidental to operations of the cooling water intake system at the Seabrook plant in New Hampshire (NMFS 2002). That letter of authorization specifies that up to 20 harbor seals (*Phoca vitulina*) and up to a combined total of four gray (*Halichoerus grypus*), harp (*Pagophilus groenlandicus*), and hooded seals (*Cystophora cristata*) may be taken annually (NMFS 2002). As part of the take authorization, the licensee of the Seabrook plant is required to monitor the intake facilities for seals and report the impingement of any seals to the NMFS. No seals have been impinged at the Seabrook plant since the installation of seal deterrent barriers in August 1999 (NMFS 2002).

Under the Magnuson-Stevens Act, the NMFS is responsible for the management of commercial and recreational fisheries within the Exclusive Economic Zone (EEZ) of the United States, which includes marine waters that extend seaward for up to 200 nautical miles from State-managed coastal waters. The Magnuson-Stevens Act calls for the description, identification, and management of essential fish habitat (EFH) to help conserve and manage Federal fishery resources. EFH is defined as those waters and substrates that are necessary to fish for spawning, breeding, feeding, or growth to maturity. The Magnuson-Stevens Act established Fishery Management Councils and requires them to describe and identify EFH in their respective regions and to specify actions to conserve and enhance that EFH. The Magnuson-Stevens Act also requires Federal agencies to consult with NMFS on activities that may adversely affect the EFH designated in fishery management plans.

In addition to designating EFH, the NMFS requires Fishery Management Councils to identify habitat areas of particular concern (HAPCs) within fishery management plans. These HAPCs are discrete subsets of EFH that provide important ecological functions or are especially vulnerable to degradation. Councils may designate a specific habitat area as an HAPC on the basis of the (1) importance of the ecological function provided by the habitat; (2) extent to which the habitat is sensitive to human-induced environmental degradation; (3) whether, and to what extent, development activities are or will be stressing the habitat type; or (4) the rarity of the habitat type. While the HAPC designation does not confer additional protection for or restrictions on an area, it can help prioritize conservation efforts.

Fishery management plans for Federally managed species are typically prepared by the appropriate regional Fishery Management Council(s) and submitted to the NMFS for review, approval, and implementation. Because some of these Federally managed fish and invertebrate species use coastal habitats (e.g., estuaries, coastal rivers, submerged aquatic vegetation, salt marshes, coral reefs, rocky intertidal areas, and hard or live bottom areas) during their lives, some coastal habitats outside of the EEZ have been designated as EFH for one or more managed species. Because of this, some activities on land and in the water have a potential to alter, damage, or destroy EFH components, thereby affecting the fishery resources that use them. Thus, operations of nuclear power plants located in marine, estuarine, and coastal areas have the potential to affect EFH. To date, EFH assessments have been completed as part of the license renewal process for three nuclear power plants (Pilgrim, Vermont Yankee, and Oyster Creek) and as part of the extended power uprate evaluation for the Hope Creek plant.

Overall, there are 17 nuclear power plants where potential impacts on EFH may be a consideration (Table 3.6-3), primarily because cooling water is withdrawn from or discharged to estuarine or marine habitats. However, cooling water withdrawn from or discharged to freshwater sources that provide habitat for some Federally managed anadromous species (e.g., salmon) could also affect EFH.

Table 3.6-3. Operating Nuclear Power Plants for Which Essential Fish Habitat May Be a Consideration

Plant	State	Cooling Water Source
Brunswick[(a)]	North Carolina	Cape Fear River
Calvert Cliffs	Maryland	Chesapeake Bay
Columbia	Washington	Columbia River
Crystal River	Florida	Gulf of Mexico
Diablo Canyon	California	Pacific Ocean
Hope Creek[(b)]	New Jersey	Delaware River
Indian Point	New York	Hudson River
Millstone	Connecticut	Long Island Sound
Oyster Creek[(c)]	New Jersey	Barnegat Bay
Pilgrim[(d)]	Massachusetts	Cape Cod Bay
St. Lucie	Florida	Atlantic Ocean
Salem	New Jersey	Delaware River
San Onofre	California	Pacific Ocean
Seabrook	New Hampshire	Atlantic Ocean
Surry	Virginia	James River
Turkey Point	Florida	Biscayne Bay
Vermont Yankee[(e)]	Vermont	Connecticut River

(a) EFH assessment completed as part of SEIS for Brunswick license renewal (NRC 2006e).
(b) EFH assessment completed as part of the evaluation for the Hope Creek extended power uprate.
(c) EFH assessment completed as part of SEIS for Oyster Creek license renewal (NRC 2007c).
(d) EFH assessment completed as part of SEIS for Pilgrim license renewal (NRC 2007e).
(e) EFH assessment completed as part of SEIS for Vermont Yankee license renewal (NRC 2007f).

3.7 Historic and Cultural Resources

Historic and cultural resources include prehistoric era and historic era archaeological sites, historic districts, and buildings, as well as any site, structure, or object that may be considered eligible for listing on the *National Register of Historic Places* (NRHP). Historic and cultural resources also include traditional cultural properties that are important to Native American Tribes for maintaining their culture.

Historic and Cultural Resources

- ***Historic and cultural resources*** include prehistoric and historic era archaeological sites, historic structures, and traditional cultural properties.
- ***Prehistoric era resources*** are the remains of human activities from the time period prior to the arrival of Europeans in North America in the 1490s.
- ***Historic era resources*** are those resources created after Europeans arrived in North America and are most often associated with Europeans or their descendants.
- ***Traditional cultural properties*** are historic and cultural resources that are important for a group to maintain its cultural heritage. Examples include traditionally used plants, gathering areas, and landscape features.

3.7.1 Regulatory Framework

The National Historic Preservation Act (NHPA) of 1966, as amended (*United States Code*, Title 16, Section 470 [16 USC 470 et seq.]), is the primary Federal law that addresses undertakings. Undertakings are defined in the NHPA as any project or activity that is funded or under the direct jurisdiction of a Federal agency, or, most importantly for the actions addressed in this document, any project or activity that requires a Federal permit, license, or approval. License renewal is a Federal undertaking that requires compliance with the NHPA. Although the NRC is not a land-managing agency and the sites are privately owned, license renewal is a Federal undertaking that requires compliance with Section 106 of the NHPA.

Section 106 of the NHPA requires federal agencies to take into account the effects of their undertakings on historic properties and afford the Advisory Council on Historic Preservation a reasonable opportunity to comment on such undertakings. The NHPA created a State Historic Preservation Office (SHPO) for each State to maintain a record of all historic and cultural resources in the State and to review any undertakings that could impact historic and cultural resources to ensure compliance with the NHPA. The Advisory Council on Historic Preservation is an independent Federal agency that provides guidance on the application of Federal historic and cultural resource laws and serves as an arbiter when disputes arise.

Section 106 of the NHPA identifies the process for considering historic and cultural resources during a Federal undertaking (36 CFR Part 800). The process requires that the SHPO, the appropriate Federally recognized Native American Tribes, and the public be given the

opportunity to comment on undertakings that could affect historic and cultural resources. The SHPOs are authorized only to comment on an undertaking. The lead Federal agency or the designated applicant must determine if historic and cultural resources eligible for listing on the NRHP are present. A determination is generally accomplished through a combination of a literature search, a review of the SHPO files for the region, and field investigations conducted by individuals who meet the Secretary of the Interior's Guidelines for Historic Preservation (cultural resource professionals). Only cultural resource professionals can make the determination if significant resources are present. If resources are present, their significance is determined through application of the *National Register* criteria (see text box). Impacts resulting from an undertaking to properties eligible for the NRHP must be mitigated. Mitigation is commonly achieved through documentation of the resource.

Information on where historic and cultural resources are located is considered proprietary. This designation is intended to protect historic and cultural resources (primarily archaeological resources) from illegal collecting. The NHPA requires that information on the locations of historic and cultural resources be withheld from the public to protect the resources (36 CFR 800.11(c)(1)).

Most nuclear power plants in the United States were constructed in the 1960s, 1970s, and early 1980s. Although the NHPA was passed in 1966, the process for complying with the law was developing during the 1970s and early 1980s. Over the last 30 years, the process for complying with the NHPA has been modified. Some of the changes involve the role of the SHPO in the Section 106 consultation process, the role of Native American Tribes, and the methods used for field investigations. Ground-disturbing activities have taken place at most plants (both during construction and operations), and the potential for historic and cultural resources in heavily disturbed areas may be considered unlikely. However, developed and less-developed portions of a plant site, including areas that were previously examined, could still contain unknown historic and cultural resources. Any areas that would be disturbed at a plant need to be reviewed for the presence of historic and cultural resources by qualified professionals and in consultation with the SHPO.

National Register Criteria (36 CFR 60.4 a-d)

To be listed on the *National Register of Historic Places*, historic properties must meet one of the following criteria:

- Be associated with an important historical event,
- Be associated with a historically important person,
- Be representative of a period or have high artistic value, or
- Have the potential to provide important information for history or prehistory.

3.7.2 Prehistoric and Historic Era Historic and Cultural Resources

Prehistoric and historic era historic and cultural resources are the remains of past human activity. The prehistoric era refers to the period before Europeans arrived in North America in the 1490s. Evidence of prehistoric peoples in North and South America suggests that humans have been in the Americas for at least 12,000 years. During the first several thousands of years that humans were in North America, the climate was much different than today. The exact weather fluctuations that occurred across the continent are not well understood. It is known that the modern climate developed around 8000 years ago. Some of the most heavily used areas on the landscape for prehistoric era people were along rivers, lakes, and the seashore. These locations provided freshwater and the most abundant food sources, as well as the most efficient ways to travel. Waterways formed the primary transportation routes in North America for thousands of years. As a result, prehistoric era archaeological sites tend to be found along these waterways. The types of prehistoric archaeological resources found include small temporary camps, larger seasonal camps that were returned to year after year, large village sites that were occupied continuously over several years or potentially centuries, or specialized-use areas associated with fishing or hunting or with tool and pottery manufacture.

Historic era resources are those associated with Europeans or their descendants. Like sites used by prehistoric peoples, historic era sites tend to cluster near waterways because water was the most efficient form of transportation. Historic era resources include farmsteads, mills, forts, residences, industrial sites (such as mines or canals), and shipwrecks.

The fact that past human activities were focused along waterways is important to note because most nuclear power plants are located along major rivers, lakes, or the ocean. Consequently, the potential for the presence of historic and cultural resources near most nuclear power plants is high. A review of historic and cultural resources at 27 nuclear plants that have already undergone license renewal indicates that generally very few archaeological sites have been identified at the power plant locations. In the cases where field investigations were undertaken, the average number of historic and cultural resources present was 35 per plant. At plants where field investigations did not take place, no sites were known. Some of the historic and cultural resources identified include village sites, town sites, and cemeteries.

Activities that take place as part of continued operations and refurbishment activities that could affect archaeological sites include grading for parking lots, construction of security barriers, any new construction or ground clearing, vegetation removal, and landscaping activities. Even a small amount of ground clearing could critically alter a small but very significant historic and cultural resource. For instance, a small short-term-occupation site can be a time capsule for understanding past lifeways, even if the site is only 0.5 ac.

3.7.3 Traditional Cultural Properties

Traditional cultural properties are historic and cultural resources that are important for a group to maintain its cultural heritage. Traditional cultural properties are most often associated with Native American religious or cultural practices. Examples of traditional cultural properties include traditional gathering areas where particular plants or materials were harvested, a sacred mountain or landscape that was crucial to a Tribe's identity, or burial locations that connect Native Americans with their ancestors. Most traditional cultural properties can be identified only through consultation with Federally recognized Native American Tribes. The location of traditional cultural properties is often kept private by Native Americans. Often SHPOs are unaware of these locations. The identification of traditional cultural properties is an important part of the consultation requirement of Section 106 of the NHPA.

3.8 Socioeconomics

Nuclear power plants affect socioeconomic conditions in the area surrounding them, including local, regional, and State employment and income; regional population and housing; local community services; and local transportation. To describe the general socioeconomic environment in the vicinity of nuclear power plants, economic data compiled by the Nuclear Energy Institute (NEI) was used. This information describes economic conditions in the vicinity of nuclear plants located in both rural and semi-urban regions (see Section D.7 in Appendix D).

3.8.1 Power Plant Employment and Expenditures

Nuclear plant operations generate employment and expenditures at each plant site. Wage and salary and nonlabor expenditures create demand for a range of durable and nondurable goods provided by wholesalers and retailers, while wage and salary spending also create demand for health and professional services and for housing. Power plants also provide tax revenues for governmental entities to spend on education, public safety, local government services, and transportation.

Employment at nuclear power plants varies according to a number of factors, including the number of reactors, power production, and the type and age of the plant. At 11 nuclear plants for which detailed economic annual data have been collected, employment averaged 1337 individuals, ranging from 528 at Three Mile Island to 2385 at Palo Verde (Table 3.8-1). Annual wage and salary expenditures at the State level reflected the size of the labor force at each plant, ranging from $59.2 million at Grand Gulf to $194.2 million at Palo Verde. Annual

Table 3.8-1. State Employment, Expenditures, and Tax Revenues at 11 Nuclear Plants from 2003 Through 2006[(a)]

Plant	Employment	Labor Expenditures ($ million)	Nonlabor Expenditures ($ million)	Total Expenditures ($ million)	Tax Revenues ($ million)
Diablo Canyon	1638	123.1	48.8	171.9	27.0
Grand Gulf	621	59.2	1.8	61.0	26.2
Indian Point	1559	145.9	54.9	200.8	35.3
Limerick	705[(b)]	NA[(c)]	NA	NA	NA
Millstone	1406	96.4	63.0	159.4	25.0
Oconee	1328[(b)]	NA	NA	NA	NA
Palo Verde	2385	194.2	21.1	215.3	90.6
Peach Bottom	666[(b)]	NA	NA	NA	NA
Susquehanna	1528	196.7	56.1	252.8	35.3
Three Mile Island	528	61.6	26.2	87.8	0.9
Wolf Creek	1028	103.6	5.6	109.2	24.8

(a) Data for Millstone are for 2003; data for Diablo Canyon, Indian Point, Oconee, and Palo Verde are for 2004; data for Three Mile Island and Wolf Creek are for 2005; data for Grand Gulf, Limerick, Peach Bottom, and Susquehanna are for 2006.
(b) National employment data.
(c) NA = not available.
Sources: Nuclear Energy Institute, 2003, 2004a,b,c,d, 2005a,b, 2006a,b,c

labor expenditures averaged $122.6 million, or $95,029 per permanent full-time worker. In addition to labor expenditures, each plant also had expenditures for materials, equipment, and services to support power plant operations. Some plants, such as Millstone ($63.0 million), Susquehanna ($56.1 million), and Indian Point ($54.9 million), had significant nonlabor expenditures, while others spent less than $10 million. Annual nonlabor expenditures at the 11 plants averaged $34.7 million.

Nuclear power plants provide annual tax revenues to State and local government entities. State and local taxes paid by power plants ranged from $0.9 million at Three Mile Island to $90.6 million at Palo Verde, averaging $27.6 million. Differences in tax revenues among plants are related to variations in State and local taxation laws, electricity output, plant size, and plant employment.

Additional employment and expenditures occur during refueling activities at each plant, when between 200 and 900 people may be employed over a 1 to 2-month period (NRC 1996). Refueling occurs on an approximate 18-month cycle.

3.8.2 Regional Economic Characteristics

The impacts of nuclear power plant operations occur at the local level (i.e., in the county in which a plant is located), at the regional level (i.e., in the counties in which the majority of the plant's employees reside), and at the State level. Impacts at each level can vary considerably, depending on the type of local and State economy. In general, nuclear power plants in the United States are located in one of two broad types of economic setting: rural or semi-urban. Impacts in these settings are described here.

3.8.2.1 Rural Economies

Many nuclear power plants are located in rural areas, where agriculture is the primary economic activity. Rural areas often have relatively simple economies, without many of the industries that provide equipment and services important to plant operations, and with smaller, less diversified labor markets that are often composed of lower-paying occupations requiring less skill. In addition to agriculture and related activities, a range of other activities, including those associated with the resource extraction, manufacturing, and transportation industries, may provide employment and income.

Average employee earnings at nuclear power plants are high when compared to the regional average. Among the 11 plants located in rural areas shown in Table 3.8-2, only Diablo Canyon and Wolf Creek provided 1 percent or more of regional employment, while average plant earnings at most plants (particularly Oconee, Wolf Creek, and Diablo Canyon) were higher than the regional average.

Employment, wages, salaries, and nonlabor expenditures are directly associated with plant operations. As direct expenditures circulate through the economy, producing additional economic activity, spending in the local and regional economy also produces indirect employment and income. The size of the indirect local impact depends closely on both the extent to which plant employees live in the local area (and consequently the size of the wage and salary bill paid to local residents) and the presence of local vendors of material and supplies. These determine the ability of the local economy to absorb nonlabor spending.

Indirect impacts occur annually in the local area at a number of power plants as a result of direct plant expenditures. For example, 882 indirect jobs were created at Diablo Canyon and 952 jobs were created at Oconee; these are the two plants with the largest direct employment

Table 3.8-2. Plant and Regional Employment and Earnings in Rural Locations

Plant	Plant Regional Employment	Total Regional Employment	Percent of Total Regional Employment	Annual Avg. Plant Earnings per Worker ($)	Annual Avg. Regional Earnings per Worker ($)	Percent of Regional Avg. Earnings
Diablo Canyon	1260	118,500	1.1	85,200	52,400	163
Grand Gulf	593	162,100	0.4	70,400	50,000	141
Oconee	1312	161,108	0.8	83,100	45,700	182
Peach Bottom	523	652,903	0.1	75,700	63,500	119
Susquehanna	305	151,869	0.2	69,500	52,000	134
Three Mile Island	512	742,700	0.1	71,300	53,500	133
Wolf Creek	838	82,243	1.0	72,400	43,100	168

Source: Nuclear Energy Institute 2004a,c, 2005a,b, 2006a,c

(Table 3.8-3). Almost 2300 total jobs are created in the local area at these two plants annually. On average, an additional 0.4 job is created locally for every direct job at each plant. Expenditures at the Oconee plant produced $25.3 million in indirect income in the local area, $135.6 million in total. At Diablo Canyon, $19.1 million in income was produced in the host county, and $128.1 million was produced in total. On average, an additional 11 cents in income was produced in the local area for every dollar of direct income paid at each plant site.

Plant expenditures associated with wages, salaries, procurement, and tax revenues create additional direct and indirect impacts beyond the local area. At Diablo Canyon, 1616 indirect jobs in the State were created by expenditures at the plant, in addition to 1638 direct jobs (Table 3.8-4). At Susquehanna, the plant created 2639 indirect jobs in the State, in addition to 1528 direct jobs; at Wolf Creek, 1028 direct and 986 indirect jobs were created in the host State. On average, 1.3 additional jobs are created in the State for every direct job at each plant. Although the largest impacts occurred at the three plants that had the largest direct employment, the sizes of the indirect impact and total impact of each plant are related to variations in the extent of wage, salary, and procurement expenditures within each State.

Annual expenditures at each plant also produced indirect income and tax revenues at the State level. The Susquehanna plant produced $96.6 million of indirect income in the State, $293.3 in total. The Diablo Canyon plant produced $50.8 million of income in the State, and $173.9 million in total (Table 3.8-4). Expenditures at Susquehanna also produced $14.8 million

Table 3.8-3. Local Economic Impacts of Plant Operations in Rural Locations[(a)]

Plant	Employment			Income ($ million)		
	Direct	Indirect	Total	Direct	Indirect	Total
Diablo Canyon	1405	882	2287	109.0	19.1	128.1
Grand Gulf	411	152	563	38.8	3.8	42.6
Oconee	1328	952	2280	110.3	25.3	135.6
Peach Bottom	248	71	319	28.4	2.0	30.4
Susquehanna	305	76	381	37.3	2.2	39.5
Three Mile Island	208	67	275	22.8	2.0	24.8
Wolf Creek	561	121	682	55.4	2.3	57.7

(a) Impacts from Diablo Canyon occur in San Luis Obispo County; from Grand Gulf occur in Warren and Claiborne Counties; from Oconee occur in Anderson, Oconee, and Pickens Counties; from Peach Bottom occur in York County; from Susquehanna occur in Luzerne County; from Three Mile Island occur in Dauphin County; and from Wolf Creek occur in Coffey County.

Source: Nuclear Energy Institute 2004a,c; 2005a,b; 2006a,c

Table 3.8-4. State Economic Impacts of Plant Operations in Rural Locations

Plant	Employment			Income ($ million)			State and Local Taxes ($ million)		
	Direct	Indirect	Total	Direct	Indirect	Total	Direct	Indirect	Total
Diablo Canyon	1638	1616	3254	123.1	50.8	173.9	27.0	11.6	38.6
Grand Gulf	625	695	1316	59.2	19.5	78.7	26.2	3.3	29.5
Susquehanna	1528	2639	4167	196.7	96.6	293.3	35.3	14.8	50.2
Three Mile Island	528	848	1376	69.6	29.6	91.2	0.9	4.8	5.7
Wolf Creek	1028	986	2014	103.6	25.6	129.3	24.8	5.0	29.9

Source: Nuclear Energy Institute 2004a,c; 2005a,b; 2006a,c

of indirect tax revenues at the State and local level, with $11.6 million of indirect tax revenues generated by the Diablo Canyon plant. An additional 40 cents in income is produced in the State on average for every dollar of direct income paid at each plant site, and an additional $1.25 in tax revenues is produced on average for each dollar of direct State and local taxes paid at each plant.

3.8.2.2 Semi-Urban Economies

Many nuclear power plants are located in semi-urban areas. These areas have more complex economic structures than rural areas, containing a wider range of industries, with larger and more diverse labor markets. Semi-urban areas may also serve specialized economic functions, including maritime shipping, fishing, and boatbuilding; recreation; and tourism. Numerous locations serve residential areas containing second homes and hosting retirement communities.

The economies of many of the semi-urban areas in which nuclear plants are located have changed since these plants were constructed. Gradual residential and commercial development and the associated diversification of economic activity in these areas have changed the local and regional economic profile, with a decline in the importance of agriculture and other related activities and their replacement by manufacturing, retailing, and professional services. At other sites, especially those in coastal locations, participation in outdoor recreational activities by both the local and nonresidential population has also changed the focus of local and regional economic activity; this, together with the often-associated growth of retirement communities, rivals the importance of traditional economic activities in the vicinity of a power plant site in providing employment and income.

Among the 11 plants located in semi-urban economies shown in Table 3.8-5, none provided 1 percent or more of regional employment, while average plant earnings at most plants (particularly Millstone and Indian Point) were higher than the regional average.

Table 3.8-5. Plant and Regional Employment and Earnings in Semi-Urban Locations

Plant	Plant Regional Employment	Total Regional Employment	Percent of Total Regional Employment	Annual Avg. Plant Earnings per Worker ($)	Annual Avg. Regional Earnings per Worker ($)	Percent of Regional Avg. Earnings
Indian Point	1053	899,331	0.2	121,700	85,800	142
Limerick	590	786,824	0.1	75,900	74,300	102
Millstone	1066	130,721	0.8	80,200	52,100	154
Palo Verde	2385	1,427,292	0.1	66,000	58,600	113

Source: Nuclear Energy Institute 2003; 2004b,d; 2006b

Employment, wages, salaries, and nonlabor expenditures are directly associated with plant operations. As direct expenditures circulate through the economy, producing additional economic activity, spending in the local and regional economy also produces indirect employment and income. Local impacts shown in Table 3.8-6 are those impacts that occur in the county hosting the power plant and in the adjacent counties. The size of the indirect local

impact depends closely on both the extent to which plant employees live in the host county or counties (and consequently the size of the wage and salary bill paid to local residents) and the presence of local vendors of material and supplies. These determine the ability of the local economy to absorb nonlabor spending.

Indirect impacts occur annually in the local area at a number of power plants as a result of direct plant expenditures. For example, 1570 indirect jobs were created at Palo Verde, 1272 were created at Millstone, and 1198 were created at Indian Point. These are the three plants with the largest direct employment (Table 3.8-6). More than 3900 total jobs are created annually in the local area at the Palo Verde plant. On average, an additional 0.8 job is created for every direct job at each plant. Expenditures at the Palo Verde plant produced $51.7 million in indirect income in the local area, $244.9 in total. At Millstone, $45.1 million in income was produced in the local area, and $44.8 million was produced at Indian Point. At Indian Point, a total of $171.4 million in income was produced annually, compared with $118.2 million at Millstone, because employment and direct wage and salary expenditures were higher at Indian Point. On average, an additional 40 cents in income is produced in the local area for every dollar of direct income paid at each plant site.

In addition to impacts in the local area, nuclear power plants also generate employment and income in the economies as a whole of the States in which plants are located, since plant expenditures associated with wages, salaries, procurement, and tax revenues

Table 3.8-6. Local Economic Impacts of Plant Operations in Semi-Urban Locations[(a)]

Plant	Employment			Income ($ million)		
	Direct	Indirect	Total	Direct	Indirect	Total
Indian Point	1355	1198	2553	126.6	44.8	171.4
Limerick	253	132	385	31.3	5.7	36.9
Millstone	1066	1272	2338	73.1	45.1	118.2
Palo Verde	2373	1570	3943	193.2	51.9	245.2

(a) Impacts from Indian Point occur in Westchester, Duchess, Orange, Putnam, and Rockland Counties; from Limerick occur in Montgomery County; from Millstone occur in New London County; from Palo Verde occur in Maricopa County.
Source: Nuclear Energy Institute 2003; 2004b,d; 2006b

create additional direct and indirect impacts beyond the local area. In 2006, expenditures at Millstone created 1841 indirect jobs in the State, in addition to 1406 direct jobs (Table 3.8-7). At Palo Verde, the plant created 1800 indirect jobs in the State, in addition to 2385 direct jobs. At Indian Point, 1559 direct and 1620 indirect jobs were created in the host State. On average,

one additional job is created in the State for every direct job at each plant. Although the largest impacts occurred at the three plants with the largest direct employment, the sizes of the indirect impact and total impact of each plant are related to variations in the extent of wage, salary, and procurement expenditures within each State.

Annual expenditures at each plant also produced indirect income and tax revenues at the State level. The Millstone plant produced $78.4 million in indirect income in the host county, $174.8 in total (Table 3.8-7). At Indian Point, $65.2 million in income was produced in the local area, and $211.1 million in total. Expenditures at Millstone also produced $39.7 million in indirect tax revenues at the State and local level, with $14.4 million in indirect tax revenues generated by the Indian Point plant, and $7.8 million by Palo Verde. On average, an additional 51 cents in income is produced in the State for every dollar of direct income paid at each plant site, and an additional 96 cents in tax revenues is produced for each dollar of direct State and local taxes paid at each plant.

3.8.3 Demographic Characteristics

Although the majority of nuclear power plant sites are situated in smaller, rural communities, the population density within 20 mi (50 km) of most sites is relatively high, and most sites are within 50 mi (80 km) of a community with a population of 100,000 (see Section D.7 in Appendix D). The magnitude of the impact of a power plant on the local population, housing, community services, and transportation may be related to the remoteness of the plant location.

Table 3.8-7. State Economic Impacts of Plant Operations in Semi-Urban Locations

	Employment			Income ($ million)			State and Local Taxes ($ million)		
Plant[(a)]	**Direct**	**Indirect**	**Total**	**Direct**	**Indirect**	**Total**	**Direct**	**Indirect**	**Total**
Indian Point	1559	1620	3179	145.9	65.2	211.1	35.3	14.4	49.7
Millstone	1406	1841	3247	96.4	78.4	174.8	17.1	39.7	56.8
Palo Verde	2385	1800	4185	194.2	55.1	249.3	54.1	7.8	62.0

(a) Data for Limerick are not included because impact estimates are not available at the State level.
Source: Nuclear Energy Institute 2003; 2004b,d; 2006b

To evaluate the remoteness of areas in which nuclear plants are located, in the 1996 GEIS, the NRC developed two measures of remoteness, namely “sparseness” and “proximity,” which combine data on population density and the distance to larger cities to place nuclear plants into three population classes. Population classifications of 11 selected power plant sites are shown in Table 3.8-8.

Some communities in which nuclear power plants are located have transient populations. These are often associated with regional tourist and recreational activities, weekend and summer homes, or populations of students who attend regional colleges and other educational institutions. Coastal regions hosting nuclear power plants, notably D.C. Cook and Palisades on Lake Michigan and Oyster Creek on the New Jersey shore north of Atlantic City, have summer, weekend, and retirement populations and a range of recreational and environmental amenities that attract visitors from nearby metropolitan population centers. Some areas, such as the region around Vermont Yankee, offer specific outdoor recreational activities, such as skiing, that attract visitors.

In addition to transient populations, communities in rural areas in which power plants are located also have varying numbers of migrant workers employed on a seasonal basis on farms and in factories that process farm produce. For example, berry production near the D.C. Cook and Palisades Nuclear Plants is a local agricultural activity that employs a sizable migrant labor force in the summer.

Table 3.8-8. Population Classification of Regions Around Selected Nuclear Power Plants

Population	Plant	Population Density Within 20 mi	Sparseness Measure	Population Density Within 50 mi	Proximity Measure
Low	Palo Verde	13.3	1	227.5	4
	Wolf Creek	11.0	1	22.0	1
	Oconee	154.1	4	156.7	3
Medium	Diablo Canyon	286.7	4	106.8	3
High	Susquehanna	250.4	4	215.7	4
	Peach Bottom	299.3	4	698.6	4
	Millstone	440.4	4	699.9	4
	Three Mile Island	639.5	4	315.1	4
	Limerick	869.9	4	977.5	4
	Indian Point	839.7	4	2265.5	4

Source: Argonne National Laboratory calculations.

3.8.4 Housing and Community Services

Housing markets in the vicinity of nuclear power plants vary considerably, with ranges in the number of housing units and the type and quality of housing. Much of the variation is related to the nature of the economy in which each plant is located, particularly regional population and income levels; proximity to metropolitan areas; and the importance of recreation, tourism, second homes, and retirement communities. Although housing demand in local communities in the vicinity of each site is related to the number of permanent onsite employees, there may be significant variation in housing demand during periodic outages, when temporary maintenance and refueling workers may occupy vacant rental accommodations and may significantly affect local and regional vacancy rates for this type of housing. Where suitable housing is not available, some workers may occupy motels and other temporary accommodations, including housing provided onsite at some power plants.

Sparseness Indices

Most Sparse	1	There are fewer than 40 people/mi^2 (15 people/km^2) and there is no community with 25,000 or more people within 20 mi (32 km) of the plant.
	2	There are 40 to 60 people/mi^2 (15 to 23 people/km^2) and there is no community with 25,000 or more people within 20 mi (32 km) of the plant.
	3	There are 60 to 120 people/mi^2 (23 to 46 people/km^2) and there is at least one community with more than 25,000 people/mi^2 (10,000 people/km^2) within 20 mi (32 km) of the plant.
Least Sparse	4	There are more than 120 people/mi^2 (46 people/km^2) within 20 mi (32 km) of the plant.

Proximity Indices

Not in Close Proximity	1	There are fewer than 50 people/mi^2 (19 people/km^2) and there is no city with more than 100,000 people within 50 mi (80 km) of the plant.
	2	There are 50 to 190 people/mi^2 (19 to 73 people/km^2) and there is no city with 100,000 people within 50 mi (80 km) of the plant.
	3	There are fewer than 190 people/mi^2 (73 people/km^2) and there are one or more cities with more than 100,000 people within 50 mi (80 km) of the plant.
In Close Proximity	4	There are more than 190 people/mi^2 (73 people/km^2) within 50 mi (80 km) of the plant.

Plants located in rural communities, where traditional employment is in agriculture, may have relatively small housing markets, stable prices for most types of housing, lower median house values, and moderate and stable vacancy rates. Given the large differential between power plant employee earnings and average regional earnings (see Section 3.8.2), power plant workers may occupy housing with a higher price than the regional median price. Limits to housing growth are less likely in rural communities.

In semi-urban regions, housing markets are likely to change more rapidly with suburban and exurban population growth near metropolitan areas, including influxes of temporary populations to support recreational and tourist activities and the development of retirement communities. Each activity can potentially produce more housing turnover, higher prices for most types of

housing, and lower vacancy rates. Given the smaller differential between power plant employee earnings and average regional earnings (see Section 3.8.2), power plant workers may occupy housing with prices close to the regional median price. Controls on housing development are more likely in semi-urban communities, particularly where there is a transient seasonal population.

Nuclear power plants provide tax revenues to local and State government entities. Although the most important source of revenue for local communities is property taxes, other sources of revenue include levies of electricity output and direct funding for local educational facilities and programs. In 2006, State and local taxes paid by power plants ranged from $0.9 million at Three Mile Island to $90.6 million at Palo Verde, averaging $24.1 million (Table 3.8-9). Differences in tax revenues among plants are related to variations in local and State taxation laws, electricity output, power plant size, and plant employment. Tax revenues may be used by local, regional, and State governmental entities to fund education, public safety, local government services, and transportation. In smaller rural communities, power plant tax revenues can affect the level and quality of public services available to local residents, with property tax revenues paid by power plants contributing more than 50 percent of total property taxes in some communities (e.g., at the D.C. Cook and Palisades plants in Michigan and

Table 3.8-9. State and Local Tax Revenues Generated at Eight Nuclear Power Plants

Plant[(a)]	Tax Revenues ($ million)
Diablo Canyon	27.0
Grand Gulf	26.2
Indian Point	35.3
Millstone	25.0
Palo Verde	90.6
Susquehanna	35.3
Three Mile Island	0.9
Wolf Creek	24.8

(a) Data for Limerick, Oconee, and Peach Bottom are not included because impact estimates are not available at the State level.

Source: Nuclear Energy Institute 2003; 2004a,b,c; 2005a,b; 2006a,b,c

the Nine Mile Point plant in New York). Even in semi-urban regions, revenues from power plants provide support for public services at the local level (e.g., at the Oyster Creek plant in New Jersey).

The restructuring of utilities has occurred in some States with the deregulation of electricity markets, and this has led to changes in the methods used to estimate property values at some nuclear power plants. At some plants, these changes have had an impact on the property taxes that utilities pay to State and local taxing jurisdictions. Any changes in tax revenues following utility deregulation would not occur as a direct result of license renewal.

3.8.5 Local Transportation

Local and regional transportation networks in the vicinity of nuclear power plant sites may vary considerably depending on the regional population density, location, and size of local communities, nature of economic development patterns, location of the region relative to interregional transportation corridors, and land surface features, such as mountains, rivers, and lakes. The impacts of employee commuting patterns on the transportation network in the vicinity of nuclear power plants depend on the extent to which these factors limit or facilitate traffic movements and on the size of the plant workforce that uses the network at any given time. Impacts at the local level in the immediate vicinity of power plant sites vary depending on the capacity of the local road network, local traffic patterns, and particularly the availability of alternate routes for power plant workers. Given the rural locations of most power plant sites, site traffic has a small impact on the local road system, since often there is not much other traffic on local roads in the immediate vicinity of the plant. Because most sites have only one access road, there may be congestion on this road at certain times, such as during shift changes.

3.9 Human Health

3.9.1 Radiological Exposure and Risk

Radiological exposures from nuclear power plants include offsite doses to members of the public and onsite doses to the workforce. Each of these impacts is common to all commercial U.S. reactors. The Atomic Energy Act requires the NRC to promulgate, inspect, and enforce standards that provide an adequate level of protection for public health and safety and the environment. The NRC continuously evaluates the latest radiation protection recommendations from international and national scientific bodies to establish the requirements for nuclear power plant licensees. The NRC has established multiple layers of radiation protection limits to protect the public against potential health risks from exposure to effluent discharges from nuclear power plant operations. If the licensees exceed a certain fraction of these dose levels

in a calendar quarter, they are required to notify the NRC, investigate the cause, and initiate corrective actions within the specified time frame. Section 3.9.1.1 discusses regulatory requirements at nuclear power plants. Sections 3.9.1.2 and 3.9.1.3 discuss occupational and public exposure, respectively. These sections evaluate the performance of licensees in implementing these requirements, and they compare the doses and releases with permissible levels. Risk estimates are provided in Section 3.9.1.4.

3.9.1.1 Regulatory Requirements

Nuclear power reactors in the United States must be licensed by the NRC and must comply with NRC regulations and conditions specified in the license in order to operate. The licensees are required to comply with 10 CFR Part 20, Subpart C, "Occupational Dose Limits for Adults," and 10 CFR Part 20, Subpart D, "Radiation Dose Limits for Individual Members of the Public."

3.9.1.1.1 Regulatory Requirements for Occupational Exposure

10 CFR 20.1201 establishes occupational dose limits (see Table 3.9-1).

Under 10 CFR 20.2206, the NRC requires licensees to submit an annual report of the results of individual monitoring carried out by the licensee for each individual for whom monitoring was required by 10 CFR 20.1502 during that year.

Table 3.9-1. Occupational Dose Limits for Adults Established by 10 CFR Part 20

Tissue	Dose Limit[(a)]
Whole body or any individual organ or tissue other than the lens of the eye	More limiting of 5 rem/yr TEDE to whole body or 50 rem/yr sum of the deep dose equivalent and the committed dose equivalent to any individual organ or tissue other than the lens of the eye
Lens of the eye	15 rem/yr dose equivalent
Extremities, including skin	50 rem/yr shallow dose equivalent

(a) See text box for definitions
Note: To convert rem to sievert, multiply by 0.01.

Definitions

- ***Total effective dose equivalent (TEDE):*** Sum of the dose equivalent (for external exposure) and the committed effective dose equivalent (for internal exposure).
- ***Committed effective dose equivalent (CEDE):*** Sum of the products of the weighting factors for body organs or tissues that are irradiated and the committed dose equivalent to these organs or tissues.
- ***Deep dose equivalent:*** Applies to external whole-body exposure and is the dose equivalent at a tissue depth of 1 cm.
- ***Committed dose equivalent:*** Dose equivalent to organs or tissues from an intake of radioactive material for the 50-year period following the intake.
- ***Dose equivalent:*** Product of the absorbed dose in the tissue, quality factor, and all other necessary modifying factors at the location of interest.
- ***Shallow dose equivalent:*** Applies to the external exposure of the skin, as the dose equivalent at a tissue depth of 0.007 cm averaged over an area of 1 cm^2.
- ***Organ dose:*** Dose received as a result of radiation energy absorbed in a specific organ.
- ***Total body dose or whole body dose:*** Sum of the dose received from external exposure to the total body, gonads, active blood-forming organs, head and trunk, or lens of the eye and the dose due to the intake of radionuclides by inhalation and ingestion, where a radioisotope is uniformly distributed throughout the body tissues rather than being concentrated in certain parts.

Under 10 CFR 20.2202 and 10 CFR 20.2203, the NRC requires all licensees to submit reports of all occurrences involving personnel radiation exposures that exceed certain control levels. The control levels are used to investigate occurrences and to take corrective actions as necessary. Depending on the magnitude of the exposure, the occurrence reporting is required immediately, within 24 hours, or within 30 days. On the basis of the reporting requirement, the control levels can be placed in one of three categories (A, B, or C), as follows (Burrows and Hagemeyer 2006):

- Category A, immediate notification. A TEDE of 25 rem or more to any individual, an eye dose equivalent of 75 rem or more, or a shallow dose equivalent to the skin or extremities of 250 rad or more (10 CFR 20.2202(a)(1)).

- Category B, notification within 24 hours. A TEDE of 5 rem or more to any individual, an eye dose equivalent of 15 rem or more, or a shallow dose equivalent to the skin or extremities of 50 rem or more (10 CFR 20.2202(b)(1)).

- Category C, written report within 30 days. Any incident for which notification was required and doses or releases that exceed the limits in the license set by the NRC or EPA (10 CFR 20.2203).

3.9.1.1.2 Regulatory Requirements for Public Exposure

NRC regulations in 10 CFR Part 20 identify maximum allowable concentrations of radionuclides in air and water above background at the boundary of unrestricted areas to control radiation exposures of the public and releases of radioactivity. These concentrations are derived on the basis of an annual TEDE of 0.1 rem to individual members of the public. In addition, pursuant to 10 CFR 50.36a, nuclear power reactors have special license conditions called technical specifications for radioactive gaseous and liquid releases from the plant that are required to minimize the radiological impacts associated with plant operations to levels that are as low as is reasonably achievable (ALARA).

Appendix I to 10 CFR Part 50 provides numerical values on dose-design objectives for operation of LWRs to meet the ALARA requirement. The design objective doses for Appendix I are summarized here in Table 3.9-2.

In addition to keeping within NRC requirements, nuclear power plant releases to the environment must comply with EPA standards in 40 CFR Part 190, “Environmental Radiation Protection Standards for Nuclear Power Operations.” These standards specify limits on the annual dose equivalent from normal operations of uranium fuel-cycle facilities (except mining, waste disposal operations, transportation, and reuse of recovered non-uranium special nuclear and by-product materials). The standards are given in Table 3.9-2. Radon and its daughters are covered by Subpart D of 40 CFR Part 192 (the conforming NRC regulations are in Appendix A of 10 CFR Part 40).

EPA standards in 40 CFR Part 61, “National Emission Standards for Hazardous Air Pollutants,” apply only to airborne releases. The EPA specified an annual effective dose equivalent limit of 10 mrem for airborne releases from nuclear power plants; however, no more than 3 mrem can be caused by any isotope of iodine. However, the EPA has stayed the rule for NRC-licensed commercial nuclear power reactors on the basis of its finding that NRC’s ALARA program for power reactor air effluents protects and is likely to continue to protect public health and safety with an ample margin of safety.

Table 3.9-2. Design Objectives and Annual Standards on Doses to the General Public from Nuclear Power Plants[a]

Tissue	Gaseous Effluents	Liquid Effluents
Design objectives, Appendix I to 10 CFR 50		
Total body, mrem	5[b]	3
Any organ (all pathways), mrem		10
Ground-level air dose,[b] mrad	10 (gamma) and 20 (beta)	
Any organ[c] (all pathways), mrem	15	
Skin, mrem	15	
Dose standards, 40 CFR Part 190, Subpart B		
Whole body,[d] mrem	25	
Thyroid,[d] mrem	75	
Any other organ,[d] mrem	25	

(a) Calculated doses.
(b) The ground-level air dose has always been limiting because an occupancy factor cannot be used. The 5-mrem total body objective could be limiting only in the case of high occupancy near the restricted area boundary.
(c) Particulates, radioiodines.
(d) All effluents and direct radiation except radon and its daughters.

Experience with the design, construction, and operation of nuclear power reactors indicates that compliance with the design objectives of Appendix I to 10 CFR Part 50 will keep average annual releases of radioactive material in effluents at small percentages of the limits specified in 10 CFR Part 20 and 40 CFR Part 190. At the same time, the licensee is given the flexibility in operations, compatible with considerations of health and safety, to ensure that the public is provided with a dependable source of power, even under unusual operating conditions that might temporarily result in releases that were higher than such small percentages but still well within the regulatory limits.

Another 10 CFR Part 20 requirement is that the sum of the external and internal doses (TEDE) for a member of the public shall not exceed 100 mrem/yr. This value is an annual limit and is not intended to be applied as a long-term average goal. The dose limits in 10 CFR Part 20 are based on the methodology described in International Commission on Radiological Protection (ICRP) Publication 26 (ICRP 1977). The radiation levels at any unrestricted area should not exceed 2 mrem in any single hour. Licensees may comply with the 100-mrem limit by demonstrating (1) by measurement or calculation that the dose to the individual likely to receive the highest dose from sources under the licensee's control does not exceed the limit or (2) that the concentrations of radioactive material released in gaseous and liquid effluents averaged over a single year do not exceed the levels specified in 10 CFR 20, Appendix B, Table 2; and at

the unrestricted area boundary, the dose from external sources would not exceed 2 mrem in any given hour and 50 mrem in a single year. The concentration values given in Table 2 of Appendix B to 10 CFR 20 are equivalent to the radionuclide concentrations that, if inhaled or ingested continuously in a year, would produce a TEDE of 50 mrem. Nuclear power reactors, as discussed earlier in this section, are subject to additional regulatory controls which maintain doses to members of the public to the ALARA dose-design objectives in Appendix I to 10 CFR Part 50.

3.9.1.2 Occupational Radiological Exposures

This section provides an evaluation of the radiological impacts on nuclear power plant workers. This evaluation extends to all nuclear power reactors. Currently there are 104 operating reactors in the United States, and all are LWRs. Among them, 35 are BWRs and 69 are PWRs.

Plant workers conducting activities involving radioactively contaminated systems or working in radiation areas can be exposed to radiation. Individual occupational doses are measured by NRC licensees as required by the basic NRC radiation protection standard, 10 CFR part 20 (see Section 3.9.1.1). Most of the occupational radiation dose to nuclear plant workers results from external radiation exposure rather than from internal exposure from inhaled or ingested radioactive materials. Workers also receive radiation exposure during the storage and handling of radioactive waste and during the inspection of stored radioactive waste. However, this source of exposure is small compared with other sources of exposure at operating nuclear plants.

Table 3.9-3 shows the radiation exposure data from all commercial U.S. nuclear power plants for the years 1993 through 2005. The year 1993 was chosen as a starting date because the dose data for years before 1993 were presented in the original GEIS. For each year, the number of reactors, the number of workers receiving measurable exposures, the collective dose[(a)] for all reactors combined, and the number of individuals receiving a dose in the range of 4 to 5 rem are given. Data indicate that no worker received a dose in the range of 4 to 5 rem from 2003 to 2005. The collective dose has been about 12,000 person-rem or less since 2001.

Table 3.9-4 shows the occupational dose history (since 1993) for all commercial U.S. reactors. Average collective occupational dose information and average annual individual worker doses are presented for plants that operated between 1993 and 2005. For the period from 1993 to 2005, the annual average dose per plant worker decreased from 0.31 to 0.18 rem for BWRs

(a) The collective dose is the sum of all personal doses and is expressed as person-rem.

Table 3.9-3. Occupational Whole-Body Dose Data at U.S. Commercial Nuclear Power Plants

Year	Number of Workers with Measurable Doses	Collective Dose (person-rem)	Number of Reactors	Number of Workers with Dose in the Range of 4 to 5 rem
1993	93,749	26,364	106	5
1994	83,454	21,704	107	0
1995	85.671	21,688	107	2
1996	84,644	18,883	109	0
1997	84,711	17,149	109	0
1998	71,485	13,187	105	1
1999	75,420	13,599	104	0
2000	74,108	12,652	104	0
2001	67,570	11,109	104	0
2002	73,242	12,126	104	1
2003	74,813	11,956	104	0
2004	69,849	10,368	104	0
2005	78,127	11,456	104	0

Source: Burrows and Hagemeyer 2006
Note: To convert rem to sievert (Sv), multiply by 0.01.

and from 0.25 to 0.12 rem for PWRs. During 2005, at all operating nuclear power plants, the annual average individual dose was 0.15 rem compared with an exposure limit of 5 rem. The average collective occupational exposure for the year 2005 was roughly 1.71 person-Sv (171 person-rem) per plant at BWRs and about 0.79 person-Sv (79 person-rem) per plant at PWRs.

Tables 3.9-5 and 3.9-6 show the 3-year collective dose per reactor, number of workers with measurable doses, and average dose per worker for BWRs and PWRs, respectively, for the years 2003 to 2005. For the years 2003 to 2005, the average collective occupational exposure for the BWRs was 1.63 person-Sv (163 person-rem) per plant, and for the PWRs, it was 0.81 person-Sv (81 person-rem).

Deviations higher than these averages in the table are routinely experienced, depending largely on whether a plant had an outage during a given year and the nature and extent of refurbishment or repair activities undertaken during outages.

Table 3.9-4. Annual Average Occupational Dose for U.S. Commercial Nuclear Power Plants

	Average Collective Occupational Dose Per Plant (person-rem)			Average Individual Whole-Body Dose Per Plant (rem)		
Year	**LWR**	**BWR**	**PWR**	**LWR**	**BWR**	**PWR**
1993	241	330	194	0.27	0.31	0.25
1994	203	327	137	0.26	0.31	0.22
1995	198	256	168	0.25	0.27	0.24
1996	173	256	131	0.22	0.25	0.20
1997	157	205	133	0.20	0.22	0.19
1998	126	190	92	0.18	0.21	0.17
1999	131	184	105	0.18	0.20	0.17
2000	122	174	95	0.17	0.20	0.15
2001	107	138	91	0.16	0.17	0.16
2002	117	175	87	0.17	0.20	0.14
2003	115	162	91	0.16	0.18	0.14
2004	100	156	71	0.15	0.16	0.14
2005	110	171	79	0.15	0.18	0.12

Source: Burrows and Hagemeyer 2006
Note: To convert rem to Sv, multiply by 0.01.

To identify trends, Figure 3.9-1 provides the average and median values of the annual collective dose per reactor for BWRs and PWRs for the years 1992 through 2005. The reported ranges of the values are shown by the vertical lines that extend to the minimum and maximum observed values. The rectangles indicate the range of values of the collective dose exhibited by those plants ranked in the 25th through the 75th percentiles. The median values do not normally fluctuate as much as the average values from year to year because they are not affected as much by the extreme values of the collective doses. The median collective dose was 64 person-rem for PWRs and 153 person-rem for BWRs in 2005. Figure 3.9-1 also shows that, in 2005, 50 percent of the PWRs reported collective doses between 44 and 107 person-rem, while 50 percent of the BWRs reported collective doses between 94 and 198 person-rem.

Table 3.9-7 presents the average, maximum, and minimum collective and individual occupational doses for all commercial nuclear power plants operating between 1993 and 2005. For PWRs, the maximum variation in collective dose and annual average occupational dose was observed for Indian Point Unit 2. From 1993 to 2005, the collective dose varied from 11 to 675 person-rem, and the annual average occupational dose varied

Table 3.9-5. Collective and Individual Worker Doses at BWRs from 2003 through 2005

Plant	Number of Reactor-Years	Collective TEDE per Reactor per Year (person-rem)	Number of Workers with Measurable TEDE	Average Annual TEDE per Worker (rem)
Limerick 1, 2	6	81	4023	0.12
Hatch 1, 2	6	93	3792	0.15
Duane Arnold	3	94	1928	0.15
Oyster Creek	3	99	2078	0.14
FitzPatrick	3	100	1771	0.17
Susquehanna 1, 2	6	117	5976	0.12
Grand Gulf	3	119	2859	0.13
Fermi 2	3	125	3047	0.12
Clinton	3	125	2292	0.16
Monticello	3	126	2056	0.18
Brunswick 1, 2	6	133	5878	0.14
Hope Creek 1	3	149	4918	0.09
Cooper	3	153	2629	0.17
Peach Bottom 2, 3	6	154	4864	0.19
Vermont Yankee	3	155	2843	0.16
Pilgrim	3	166	3076	0.16
Dresden 2, 3	6	166	6148	0.16
River Bend 1	3	170	3172	0.16
LaSalle 1, 2	6	193	6716	0.17
Columbia	3	199	4052	0.15
Nine Mile Point 1, 2	6	204	4229	0.29
Browns Ferry 1, 2, 3	9	212	9593	0.20
Quad Cities 1, 2	6	318	6201	0.31
Perry	3	366	4110	0.27
Totals and averages	105	–	98,251	0.17
Average per reactor-yr	–	163	–	–

Source: Burrows and Hagemeyer 2006
Note: To convert rem to Sv, multiply by 0.01.

Table 3.9-6. Collective and Individual Worker Doses at PWRs from 2003 through 2005

Plant	Number of Reactor-Years	Collective TEDE per Reactor per Year (person-rem)	Number of Workers with Measurable TEDE	Average Annual TEDE per Worker (rem)
Seabrook	3	43	2306	0.06
Harris	3	45	1697	0.08
Farley 1, 2	6	48	2739	0.10
Prairie Island 1, 2	6	48	2562	0.11
Summer 1	3	51	1679	0.09
Ginna	3	52	1185	0.13
Vogtle 1, 2	6	53	2670	0.12
Point Beach 1, 2	6	54	2105	0.15
Kewaunee	3	56	1101	0.15
Indian Point 3	3	58	2029	0.09
H.B. Robinson 2	3	63	1852	0.10
North Anna 1, 2	6	63	2692	0.14
Byron 1, 2	6	63	3272	0.12
Wolf Creek 1	3	66	1769	0.11
Palo Verde 1, 2, 3	9	68	5281	0.12
Catawba 1, 2	6	70	3551	0.12
Braidwood 1, 2	6	71	3484	0.12
Indian Point 2	3	73	1847	0.12
McGuire 1, 2	6	74	3358	0.13
Comanche Peak 1, 2	6	74	2868	0.16
Three Mile Island 1	3	75	2290	0.10
D.C. Cook 1, 2	6	76	3275	0.14
Waterford 3	3	78	1672	0.14
Turkey Point 3, 4	6	79	3667	0.13
Crystal River 3	3	84	2031	0.13
Oconee 1, 2, 3	9	85	5991	0.13
South Texas 1, 2	6	85	3019	0.17
Beaver Valley 1, 2	6	85	3871	0.13

Table 3.9-6. (cont.)

Plant	Number of Reactor-Years	Collective TEDE per Reactor per Year (person-rem)	Number of Workers with Measurable TEDE	Average Annual TEDE per Worker (rem)
Salem 1,2	6	86	5959	0.09
Diablo Canyon 1,2	6	86	3189	0.16
Surry 1,2	6	89	3533	0.15
Davis-Besse	3	93	1785	0.16
Calvert Cliffs 1,2	6	96	3818	0.15
San Onofre 2,3	6	97	3341	0.17
Sequoyah 1,2	6	102	4770	0.13
Watts Bar	3	105	2856	0.11
Millstone 2,3	6	110	3407	0.19
Arkansas 1,2	6	113	4535	0.15
Callaway 1	3	117	2976	0.12
St. Lucie 1,2	6	118	4356	0.16
Fort Calhoun	3	169	2198	0.23
Palisades	3	195	1952	0.30
Totals and averages	207	–	–	0.13
Average per reactor-yr	–	81	602	–

Source: Burrows and Hagemeyer 2006
Note: To convert rem to Sv, multiply by 0.01.

from 0.02 to 0.45 rem. For BWRs, the maximum variation in collective dose was observed for the Quad Cities plant. From 1993 to 2005, the collective dose varied from 72 to 893 person-rem. The maximum variation in the annual average occupational dose was observed for the Brunswick plant; from 1993 to 2005, it varied from 0.11 to 0.70 rem.

Table 3.9-8 shows the yearly annual collective occupational dose for all commercial nuclear power plants operating between 1993 and 2005 and Table 3.9-9 shows the yearly annual individual average occupational dose for all commercial nuclear power plants operating between 1993 and 2005. The year 1993 was chosen as a starting date because the dose data for years before 1993 were presented in the 1996 GEIS. From 1993 through 2005, operating nuclear power plants would have gone through many refueling outages, 5-year ISI, 10-year ISI, and also some refurbishment activities. To check for trends, data were divided into two time frames: from 1993 to 1999 and from 2000 to 2005. The averages for these two time frames were calculated and compared. The yearly average collective dose from 2000 to 2005

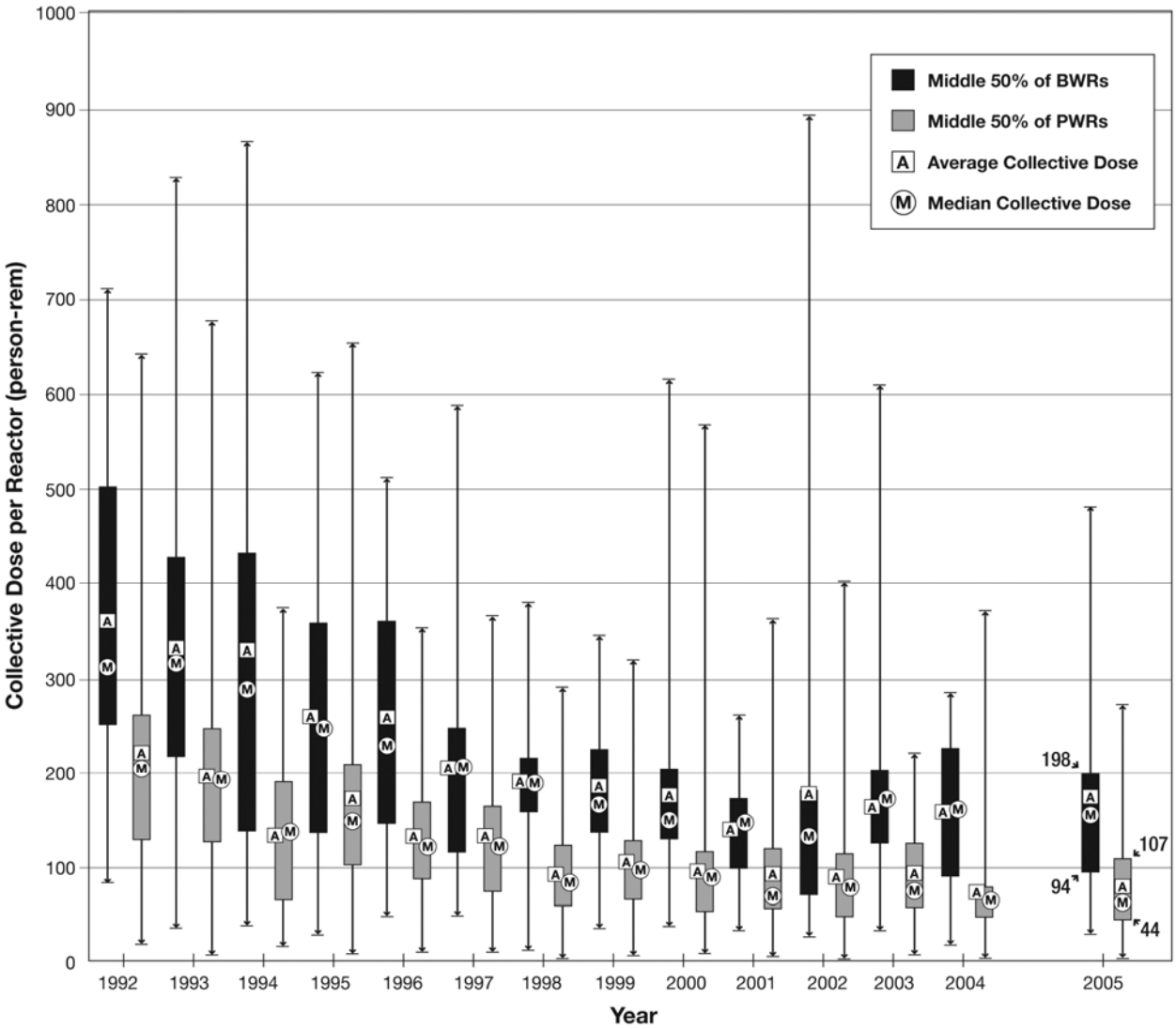

Figure 3.9-1. Average, Median, and Extreme Values of the Annual Collective Dose per Reactor from 1992 to 2005 (Source: Burrows and Hagemeyer 2006)

was mostly lower than the dose from 1993 to 1999. For a few nuclear power plants, the average annual collective dose from 2000 to 2005 was higher, but in all cases, the yearly average occupational dose was less than 0.4 rem. The yearly average occupational dose was mostly lower from 2000 to 2005 than from 1993 to 1999.

The data in Tables 3.9-8 and 3.9-9 show that although there are variations from year to year, there is no consistent trend that shows that occupational doses are increasing over time.

Table 3.9-7. Annual Collective Dose and Annual Occupational Dose for Different Commercial Nuclear Power Plants from 1993 through 2005

Plant	Collective Dose (person-rem/reactor)			Annual Occupational Dose (rem)		
	Average	Maximum	Minimum	Average	Maximum	Minimum
PWRs						
Arkansas 1, 2	107	238	50	0.13	0.20	0.09
Beaver Valley 1, 2	121	311	22	0.17	0.30	0.08
Braidwood 1, 2	103	167	44	0.16	0.26	0.09
Byron 1, 2	117	228	30	0.19	0.32	0.08
Callaway 1	137	321	8	0.14	0.29	0.03
Calvert Cliffs 1, 2	118	227	68	0.19	0.31	0.12
Catawba 1,2	104	231	41	0.15	0.25	0.08
Comanche Peak 1, 2	83	144	33	0.16	0.24	0.09
D.C. Cook 1, 2	110	275	14	0.15	0.30	0.06
Crystal River 3	117	353	4	0.12	0.30	0.03
Davis-Besse 1	132	403	6	0.13	0.28	0.03
Diablo Canyon 1, 2	121	295	59	0.17	0.29	0.11
Farley 1, 2	125	230	34	0.20	0.31	0.08
Fort Calhoun	146	273	22	0.21	0.31	0.10
Ginna	94	193	7	0.16	0.27	0.07
Harris 1	95	252	7	0.10	0.20	0.04
Indian Point 2	237	675	11	0.19	0.45	0.02
Indian Point 3	68	234	4	0.09	0.15	0.02
Kewaunee	80	200	4	0.18	0.27	0.04
McGuire 1, 2	116	246	36	0.17	0.27	0.08
Millstone Unit 2, 3	122	279	57	0.17	0.27	0.10
North Anna 1, 2	120	454	30	0.18	0.33	0.09
Oconee 1, 2, 3	102	193	50	0.17	0.29	0.10
Palisades	201	462	10	0.23	0.38	0.07
Palo Verde 1, 2, 3	90	197	47	0.16	0.28	0.10
Point Beach 1, 2	79	138	43	0.22	0.35	0.14
Prairie Island 1, 2	56	87	31	0.16	0.23	0.10

Table 3.9-7. (cont.)

Plant	Collective Dose (person-rem/reactor)			Annual Occupational Dose (rem)		
	Average	Maximum	Minimum	Average	Maximum	Minimum
H.B. Robinson 2	117	337	5	0.13	0.28	0.04
Salem 1, 2	108	204	21	0.15	0.27	0.08
San Onofre 2, 3	125	384	6	0.16	0.35	0.04
Seabrook	63	186	6	0.07	0.13	0.02
Sequoyah 1, 2	130	216	43	0.15	0.23	0.07
South Texas 1, 2	106	165	24	0.17	0.22	0.07
St. Lucie 1, 2	152	323	50	0.20	0.34	0.10
Summer 1	117	374	10	0.13	0.26	0.05
Surry 1, 2	122	203	44	0.19	0.27	0.10
Three Mile Island 1	99	213	0	0.10	0.19	0.00
Turkey Point 3, 4	105	238	37	0.17	0.32	0.09
Vogtle 1, 2	100	226	41	0.18	0.32	0.10
Waterford	89	191	3	0.12	0.16	0.04
Wolf Creek 1	113	265	3	0.13	0.27	0.04
Watts Bar 1	84	166	3	0.08	0.12	0.03
BWRs						
Duane Arnold	166	407	19	0.20	0.39	0.09
Browns Ferry 1, 2, 3	174	290	98	0.21	0.26	0.16
Brunswick 1, 2	238	500	123	0.24	0.70	0.11
Clinton 1	195	498	34	0.20	0.40	0.10
Columbia	291	866	47	0.20	0.46	0.07
Cooper	155	391	39	0.18	0.35	0.10
Dresden 2, 3	282	828	130	0.23	0.60	0.11
Fermi 2	112	213	28	0.11	0.19	0.07
FitzPatrick	204	358	51	0.18	0.26	0.10
Grand Gulf	190	357	31	0.17	0.23	0.11
Hatch 1, 2	201	432	84	0.24	0.39	0.13
Hope Creek 1	175	350	26	0.14	0.25	0.08
LaSalle 1, 2	238	427	42	0.24	0.50	0.14
Limerick 1, 2	114	179	74	0.16	0.20	0.11

Table 3.9-7. (cont.)

Plant	Collective Dose (person-rem/reactor)			Annual Occupational Dose (rem)		
	Average	Maximum	Minimum	Average	Maximum	Minimum
Monticello	186	494	35	0.27	0.52	0.10
Nine Mile Point 1, 2	210	380	75	0.25	0.33	0.16
Oyster Creek	263	844	28	0.17	0.35	0.09
Peach Bottom 2, 3	189	290	133	0.21	0.31	0.17
Perry	266	691	42	0.19	0.33	0.11
Pilgrim 1	231	588	38	0.21	0.37	0.08
Quad Cities 1, 2	388	893	72	0.35	0.52	0.20
River Bend	229	519	35	0.18	0.26	0.09
Susquehanna 1, 2	167	238	91	0.20	0.28	0.10
Vermont Yankee	146	231	38	0.20	0.26	0.15

Source: Burrows and Hagemeyer 2006
Note: To convert rem to Sv, multiply by 0.01.

The average, maximum, and minimum collective occupational doses are presented in Table 3.9-10 for plants operated between 1993 and 2005. The average collective doses, however, are based on widely varying yearly doses. For example, between 1993 and 2005, annual collective doses for operating PWRs ranged from 0 to 675 person-rem; for operating BWRs, they ranged from 19 to 893 person-rem. From 1993 to 1998, the average collective dose decreased more than 50 percent for PWRs and 40 percent for BWRs. From 1999 through 2005, the average collective dose for PWRs was in a range 71 to 105 person-rem, and for BWRs, it was in a range of 138 to 184 person-rem.

Average, maximum, and minimum individual occupational doses per reactor are presented in Table 3.9-11 for plants that operated between 1993 and 2005. From 1993 through 1998, the average annual dose per plant worker decreased more than 30 percent for both PWRs and BWRs. From 1999 through 2005, the average annual dose per plant worker for PWRs ranged from 0.12 to 0.17 rem, and for BWRs, ranged from 0.16 to 0.20 rem. The annual dose per plant worker for operating PWRs ranged from 0.0 to 0.45 rem; for operating BWRs, it ranged from 0.07 to 0.70 rem.

Table 3.9-12 provides the distribution of individual doses for 2005. The dose distribution indicates that no worker received doses greater than 3 rem in 2005. Only 17 workers (0.01 percent) received whole-body doses exceeding 2 rem during 2005. At BWRs, less than 0.03 percent of the workers received doses greater than 2 rem. At PWRs, no worker received

Table 3.9-8. Annual Collective Dose for Commercial Nuclear Power Plants from 1993 through 2005

Plant	Annual Collective Dose (person-rem/reactor)												
	1993	1994	1995	1996	1997	1998	1999	2000	2001	2002	2003	2004	2005
PWRs													
Arkansas 1, 2	134	86	193	102	60	84	92	121	53	133	50	53	238
Beaver Valley 1, 2	311	22	227	225	153	30	50	169	92	45	139	79	40
Braidwood 1, 2	137	149	118	167	161	130	73	97	51	46	123	48	44
Byron 1, 2	216	140	153	228	121	138	120	97	30	98	44	45	100
Callaway 1	225	14	187	248	12	201	321	16	107	96	8	121	223
Calvert Cliffs 1, 2	203	227	118	120	115	94	96	68	84	123	133	72	84
Catawba 1,2	198	104	231	151	133	81	60	94	58	41	106	62	42
Comanche Peak 1, 2	55	45	90	144	73	116	126	39	58	113	33	68	121
D.C. Cook 1, 2	22	240	102	107	275	53	86	169	14	139	105	78	46
Crystal River 3	60	228	8	353	179	19	251	15	148	5	127	4	123
Davis-Besse 1	348	144	7	167	10	155	28	168	6	403	220	7	51
Diablo Canyon 1, 2	141	295	143	88	110	87	225	91	59	75	68	127	62
Farley 1, 2	167	125	230	116	139	216	95	180	161	48	56	54	34
Fort Calhoun	157	23	139	226	41	224	159	35	226	164	212	22	273
Ginna	193	138	136	168	81	15	175	76	10	80	75	7	73
Harris 1	31	222	174	17	149	133	16	101	252	7	68	57	8
Indian Point 2	675	48	548	54	367	290	41	567	22	248	12	196	11
Indian Point 3	60	58	67	22	234	15	117	9	118	7	96	4	74
Kewaunee	106	72	109	126	56	88	5	100	200	4	73	91	4
McGuire 1, 2	232	199	69	119	246	71	129	67	69	91	36	98	87
Millstone Unit 2, 3	279	94	208	63	127	57	126	72	87	146	162	68	101
North Anna 1, 2	454	97	184	146	52	133	47	33	155	72	94	65	30
Oconee 1, 2, 3	79	179	101	86	74	122	67	91	193	75	82	123	50
Palisades	289	60	462	318	48	217	218	26	363	24	203	371	10

Table 3.9-8. (cont.)

Plant	Annual Collective Dose (person-rem/reactor)												
	1993	1994	1995	1996	1997	1998	1999	2000	2001	2002	2003	2004	2005
Palo Verde 1, 2, 3	197	154	161	101	82	64	49	53	61	47	70	66	67
Point Beach 1, 2	93	85	95	138	46	85	97	70	66	91	43	55	65
Prairie Island 1, 2	53	55	54	56	87	59	36	53	63	64	31	72	42
H.B. Robinson 2	337	63	215	167	13	170	124	8	125	111	5	118	65
Salem 1, 2	204	94	109	150	88	21	159	99	77	147	62	75	121
San Onofre 2, 3	384	16	228	65	171	98	177	58	66	68	82	204	6
Seabrook	6	113	102	10	186	19	106	70	9	67	71	6	52
Sequoyah 1, 2	187	148	184	135	210	133	83	179	73	54	216	43	48
South Texas 1, 2	126	24	146	69	137	92	130	116	119	165	72	60	124
St. Lucie 1, 2	246	253	207	193	323	67	89	50	114	78	71	80	203
Summer 1	297	374	13	97	163	14	120	167	69	60	71	10	72
Surry 1, 2	192	189	203	105	160	95	69	97	165	44	163	60	44
Three Mile Island 1	206	40	213	16	204	17	155	9	197	7	155	0	66
Turkey Point 3, 4	138	238	108	94	207	78	64	110	51	37	124	59	55
Vogtle 1, 2	184	109	100	226	79	81	115	61	65	122	42	41	76
Waterford	15	191	153	27	148	24	123	132	5	109	95	3	136
Wolf Creek 1	183	235	14	171	265	10	148	143	5	100	89	3	107
Watts Bar 1[(a)]					113	3	99	122	6	94	166	6	144
BWRs													
Duane Arnold	407	120	357	270	63	237	201	44	138	35	124	19	140
Browns Ferry 1, 2, 3	290	287	138	130	174	123	149	111	98	119	201	224	212
Brunswick 1, 2	436	500	342	358	206	198	209	161	152	138	125	123	153
Clinton	498	63	316	350	172	177	87	253	34	208	57	283	36
Columbia	469	866	456	373	251	286	155	53	227	47	205	66	325
Cooper	391	79	228	48	174	182	48	200	169	39	135	47	276

Table 3.9-8. (cont.)

Plant	Annual Collective Dose (person-rem/reactor)												
	1993	1994	1995	1996	1997	1998	1999	2000	2001	2002	2003	2004	2005
Dresden 2, 3	828	417	438	228	234	214	296	131	201	178	179	191	130
Fermi 2	35	213	28	157	49	208	36	146	169	38	168	145	62
FitzPatrick	232	322	327	357	91	358	68	301	63	231	51	186	63
Grand Gulf	332	56	342	357	105	304	226	35	185	176	31	158	168
Hatch 1, 2	335	432	244	221	361	160	165	201	115	107	84	90	104
Hope Creek 1	98	326	196	158	350	55	279	188	156	26	139	240	67
LaSalle 1, 2	427	363	256	410	158	211	288	130	42	225	232	180	168
Limerick 1, 2	109	138	130	117	117	179	136	131	105	80	74	75	94
Monticello	494	395	44	240	106	209	70	216	221	40	169	35	175
Nine Mile Point 1, 2	317	75	380	145	215	189	224	142	172	259	188	225	201
Oyster Creek	416	844	90	449	50	308	42	614	46	266	43	227	28
Peach Bottom 2, 3	276	290	199	141	245	183	160	166	172	167	178	133	153
Perry	278	691	64	307	272	42	326	56	258	70	607	73	417
Pilgrim 1	435	200	482	116	588	71	344	51	180	38	250	41	206
Quad Cities 1, 2	425	564	368	513	327	381	101	447	72	893	219	256	481
River Bend	180	519	85	473	347	58	344	216	208	35	217	236	56
Susquehanna 1, 2	168	221	238	145	217	181	216	166	144	130	125	136	91
Vermont Yankee	217	38	182	231	57	199	176	38	143	150	54	212	198

(a) 1st commercial operation in May 1996
Source: Burrows and Hagemeyer 2006
Note: To convert rem to Sv, multiply by 0.01.

Table 3.9-9. Annual Average Measurable Occupational Doses at Commercial Nuclear Power Plant Sites from 1993 through 2005

Plant	Average Measurable Occupational Doses (rem)												
	1993	1994	1995	1996	1997	1998	1999	2000	2001	2002	2003	2004	2005
PWRs													
Arkansas 1, 2	0.14	0.13	0.17	0.14	0.10	0.13	0.13	0.12	0.10	0.17	0.10	0.09	0.20
Beaver Valley 1, 2	0.30	0.09	0.29	0.27	0.22	0.08	0.12	0.20	0.15	0.09	0.17	0.12	0.08
Braidwood 1, 2	0.26	0.24	0.21	0.25	0.19	0.14	0.13	0.12	0.11	0.09	0.16	0.10	0.10
Byron 1, 2	0.32	0.29	0.28	0.28	0.16	0.15	0.16	0.20	0.08	0.15	0.11	0.10	0.13
Callaway 1	0.20	0.07	0.18	0.25	0.05	0.22	0.29	0.07	0.12	0.10	0.03	0.11	0.14
Calvert Cliffs 1, 2	0.28	0.31	0.20	0.20	0.21	0.18	0.17	0.15	0.19	0.16	0.16	0.12	0.18
Catawba 1, 2	0.25	0.16	0.24	0.19	0.17	0.14	0.12	0.16	0.12	0.09	0.15	0.11	0.08
Comanche Peak 1, 2	0.12	0.09	0.19	0.20	0.17	0.24	0.19	0.10	0.13	0.20	0.10	0.16	0.18
D.C. Cook 1, 2	0.07	0.27	0.15	0.19	0.30	0.09	0.10	0.14	0.06	0.17	0.15	0.15	0.11
Crystal River 3	0.09	0.21	0.04	0.30	0.18	0.06	0.19	0.06	0.16	0.04	0.13	0.03	0.13
Davis-Besse 1	0.28	0.17	0.03	0.18	0.05	0.16	0.07	0.15	0.05	0.20	0.21	0.04	0.09
Diablo Canyon 1, 2	0.19	0.26	0.18	0.12	0.17	0.13	0.29	0.17	0.11	0.15	0.13	0.21	0.13
Farley 1, 2	0.26	0.24	0.29	0.20	0.25	0.31	0.17	0.21	0.18	0.13	0.14	0.09	0.08
Fort Calhoun	0.22	0.11	0.22	0.31	0.16	0.28	0.24	0.14	0.29	0.22	0.23	0.10	0.26
Ginna	0.23	0.20	0.18	0.17	0.15	0.09	0.27	0.18	0.07	0.15	0.15	0.07	0.13
Harris 1	0.09	0.20	0.16	0.04	0.13	0.14	0.06	0.11	0.16	0.05	0.09	0.08	0.05
Indian Point 2	0.45	0.13	0.32	0.14	0.27	0.25	0.12	0.28	0.06	0.18	0.05	0.17	0.02
Indian Point 3	0.13	0.11	0.11	0.08	0.15	0.07	0.13	0.06	0.12	0.04	0.11	0.02	0.08
Kewaunee	0.24	0.20	0.26	0.27	0.20	0.23	0.05	0.25	0.18	0.04	0.17	0.16	0.04
McGuire 1, 2	0.27	0.24	0.11	0.15	0.22	0.14	0.20	0.14	0.14	0.16	0.08	0.18	0.12
Millstone Unit 2, 3	0.27	0.15	0.25	0.13	0.18	0.10	0.15	0.10	0.13	0.19	0.25	0.17	0.15
North Anna 1, 2	0.33	0.19	0.24	0.24	0.12	0.22	0.13	0.09	0.25	0.16	0.18	0.13	0.09

Table 3.9-9. (cont.)

Plant	Average Measurable Occupational Doses (rem)												
	1993	1994	1995	1996	1997	1998	1999	2000	2001	2002	2003	2004	2005
Oconee 1, 2, 3	0.16	0.28	0.19	0.17	0.16	0.22	0.13	0.16	0.29	0.13	0.11	0.16	0.10
Palisades	0.32	0.15	0.38	0.29	0.14	0.24	0.23	0.10	0.35	0.11	0.25	0.38	0.07
Palo Verde 1, 2, 3	0.28	0.23	0.26	0.18	0.16	0.14	0.11	0.12	0.13	0.10	0.11	0.15	0.10
Point Beach 1, 2	0.33	0.31	0.35	0.27	0.14	0.19	0.20	0.18	0.18	0.19	0.14	0.17	0.15
Prairie Island 1, 2	0.20	0.10	0.21	0.20	0.23	0.20	0.13	0.17	0.18	0.13	0.10	0.12	0.11
H.B. Robinson 2	0.28	0.15	0.20	0.16	0.04	0.17	0.15	0.06	0.15	0.13	0.04	0.12	0.08
Salem 1, 2	0.11	0.20	0.18	0.18	0.20	0.10	0.27	0.17	0.12	0.12	0.10	0.10	0.08
San Onofre 2, 3	0.35	0.06	0.24	0.10	0.21	0.18	0.24	0.11	0.12	0.12	0.13	0.23	0.04
Seabrook	0.05	0.13	0.13	0.05	0.12	0.03	0.08	0.06	0.02	0.06	0.07	0.02	0.05
Sequoyah 1, 2	0.23	0.17	0.22	0.19	0.21	0.17	0.12	0.18	0.11	0.09	0.17	0.07	0.08
South Texas 1, 2	0.22	0.07	0.20	0.12	0.17	0.16	0.20	0.17	0.18	0.22	0.16	0.14	0.20
St. Lucie 1, 2	0.34	0.27	0.28	0.27	0.28	0.11	0.16	0.10	0.17	0.16	0.15	0.14	0.18
Summer 1	0.26	0.24	0.05	0.14	0.20	0.05	0.15	0.18	0.14	0.09	0.10	0.05	0.10
Surry 1, 2	0.27	0.25	0.22	0.21	0.24	0.16	0.14	0.16	0.26	0.11	0.20	0.12	0.10
Three Mile Island 1	0.11	0.09	0.17	0.06	0.19	0.06	0.13	0.05	0.16	0.04	0.13	0.00	0.07
Turkey Point 3, 4	0.22	0.32	0.19	0.16	0.26	0.15	0.14	0.17	0.12	0.09	0.17	0.11	0.10
Vogtle 1, 2	0.27	0.21	0.21	0.32	0.16	0.16	0.17	0.14	0.15	0.21	0.10	0.11	0.14
Waterford	0.08	0.16	0.14	0.08	0.13	0.09	0.15	0.16	0.05	0.14	0.13	0.04	0.15
Wolf Creek 1	0.19	0.22	0.06	0.17	0.27	0.05	0.18	0.17	0.05	0.12	0.11	0.04	0.12
Watts Bar 1[(a)]					0.10	0.03	0.10	0.12	0.03	0.10	0.12	0.03	0.12
BWRs													
Duane Arnold	0.39	0.24	0.32	0.25	0.18	0.23	0.24	0.14	0.15	0.11	0.15	0.09	0.16
Browns Ferry 1, 2, 3	0.24	0.26	0.16	0.20	0.23	0.23	0.26	0.20	0.19	0.18	0.23	0.21	0.17
Brunswick 1, 2	0.30	0.70	0.26	0.26	0.19	0.20	0.23	0.20	0.19	0.16	0.14	0.11	0.16
Clinton 1	0.40	0.15	0.27	0.30	0.23	0.17	0.14	0.20	0.10	0.15	0.15	0.17	0.12

Table 3.9-9. (cont.)

Plant	Average Measurable Occupational Doses (rem)												
	1993	1994	1995	1996	1997	1998	1999	2000	2001	2002	2003	2004	2005
Columbia	0.34	0.46	0.27	0.26	0.21	0.23	0.15	0.08	0.15	0.07	0.13	0.09	0.19
Cooper Station	0.35	0.24	0.21	0.10	0.16	0.19	0.15	0.21	0.13	0.11	0.15	0.10	0.22
Dresden 2, 3	0.60	0.36	0.35	0.26	0.17	0.18	0.18	0.11	0.14	0.13	0.17	0.19	0.13
Fermi 2	0.10	0.19	0.07	0.11	0.08	0.15	0.08	0.12	0.14	0.08	0.14	0.11	0.11
FitzPatrick	0.16	0.20	0.26	0.26	0.14	0.20	0.12	0.24	0.10	0.19	0.17	0.17	0.16
Grand Gulf	0.18	0.12	0.22	0.23	0.20	0.22	0.19	0.12	0.17	0.17	0.11	0.13	0.13
Hatch 1, 2	0.39	0.39	0.33	0.29	0.37	0.20	0.18	0.21	0.16	0.17	0.13	0.15	0.16
Hope Creek 1	0.14	0.18	0.12	0.15	0.20	0.09	0.25	0.15	0.10	0.12	0.09	0.10	0.08
LaSalle 1, 2	0.50	0.40	0.32	0.29	0.19	0.20	0.21	0.14	0.15	0.22	0.21	0.15	0.16
Limerick 1, 2	0.17	0.18	0.16	0.14	0.16	0.19	0.15	0.20	0.19	0.13	0.11	0.12	0.13
Monticello	0.52	0.50	0.22	0.32	0.27	0.31	0.16	0.27	0.26	0.10	0.20	0.13	0.19
Nine Mile Point 1, 2	0.27	0.19	0.33	0.18	0.30	0.22	0.26	0.16	0.25	0.21	0.25	0.33	0.29
Oyster Creek	0.16	0.35	0.12	0.24	0.10	0.22	0.09	0.30	0.10	0.18	0.10	0.17	0.09
Peach Bottom 2, 3	0.31	0.27	0.21	0.17	0.26	0.19	0.20	0.19	0.24	0.17	0.22	0.19	0.17
Perry	0.23	0.33	0.11	0.19	0.18	0.11	0.19	0.11	0.19	0.16	0.32	0.15	0.24
Pilgrim 1	0.33	0.26	0.37	0.22	0.36	0.13	0.28	0.12	0.16	0.08	0.17	0.10	0.17
Quad Cities 1, 2	0.39	0.52	0.36	0.46	0.26	0.35	0.20	0.32	0.20	0.47	0.44	0.22	0.33
River Bend	0.21	0.24	0.13	0.23	0.21	0.12	0.26	0.20	0.17	0.09	0.17	0.17	0.11
Susquehanna 1, 2	0.23	0.28	0.27	0.20	0.26	0.23	0.24	0.18	0.16	0.14	0.13	0.13	0.10
Vermont Yankee	0.26	0.17	0.25	0.24	0.22	0.21	0.21	0.19	0.17	0.16	0.15	0.15	0.18

(a) 1st commercial operation in May 1996
Source: Burrows and Hagemeyer 2006.
Note: To convert rem to Sv, multiply by 0.01.

Table 3.9-10. Annual Collective Occupational Dose per Plant for Commercial Nuclear Power Plants

	Collective Occupational Dose (person-rem) per Plant for PWRs			Collective Occupational Dose (person-rem) per Plant for BWRs		
Year	**Average**	**Maximum**	**Minimum**	**Average**	**Maximum**	**Minimum**
1993	194	675	6	330	828	35
1994	137	374	14	327	866	38
1995	168	548	7	256	482	28
1996	131	353	10	256	513	48
1997	133	367	10	205	588	49
1998	92	290	3	190	381	42
1999	105	321	5	184	344	36
2000	95	567	8	174	614	35
2001	91	363	5	138	258	34
2002	87	403	4	175	893	26
2003	91	220	5	162	607	31
2004	71	371	0	156	283	19
2005	79	273	4	171	481	28

Source: Burrows and Hagemeyer 2006
Note: To convert rem to sV, multiply by 0.01.

a dose greater than 2 rem, and less than 0.3 percent of the workers received a dose greater than 1 rem. No worker exposure exceeded 5 rem during that calendar year. Figure 3.9-2 shows the collective dose distribution by dose range for all commercial U.S. reactors from 2001 to 2005. The distribution of collective dose has been fairly constant over the past 5 years, with a slight decrease noted from 2002 to 2005 in each dose range.

As mentioned in Section 3.9.1.1.1, under 10 CFR 20.2206, the NRC requires licensees to submit an annual report of the results of individual monitoring. In addition to reporting data on external exposures, licensees are required to report information about internal exposures. Licensees are required to list for each intake, the radionuclide, pulmonary clearance class, intake mode, and amount of the intake in microcuries. Twenty-five intakes by ingestion and other modes were reported by licensees during 2005 (5 for cobalt-58, 14 for cobalt-60, 1 for cesium-134, 1 for iron-59, and 1 for manganese-54). Many more intakes were reported for the inhalation mode. The inhalation intakes were mainly from cobalt-60, cobalt-58, manganese-54, americium-241, curium-242, curium-243, plutonium-238, and plutonium-239 (Burrows and Hagemeyer 2006). Table 3.9-13 lists the number of individuals with measurable CEDE,

collective CEDE, and average measurable CEDE per individual as reported by different nuclear power reactor stations.

Table 3.9-11. Annual Individual Occupational Dose for Commercial Nuclear Power Plants

	Whole-Body Dose (rem) per Plant for PWRs			Whole-Body Dose (rem) per Plant for BWRs		
Year	**Average**	**Maximum**	**Minimum**	**Average**	**Maximum**	**Minimum**
1993	0.25	0.45	0.05	0.31	0.60	0.10
1994	0.22	0.32	0.06	0.31	0.70	0.12
1995	0.24	0.38	0.03	0.27	0.37	0.07
1996	0.20	0.32	0.04	0.25	0.46	0.10
1997	0.19	0.30	0.04	0.22	0.37	0.08
1998	0.17	0.31	0.03	0.21	0.35	0.09
1999	0.17	0.29	0.05	0.20	0.28	0.08
2000	0.15	0.28	0.05	0.20	0.32	0.08
2001	0.16	0.35	0.02	0.17	0.26	0.10
2002	0.14	0.22	0.04	0.20	0.47	0.07
2003	0.14	0.25	0.03	0.18	0.44	0.09
2004	0.14	0.38	0.00	0.16	0.33	0.09
2005	0.12	0.26	0.02	0.18	0.33	0.08

Source: Burrows and Hagemeyer 2006
Note: To convert rem to Sv, multiply by 0.01.

A portion of the total workforce can be defined as “transient.” These individuals are usually employed for special functions and may be employed at multiple reactor sites during a given year. Data for individual reactors described earlier include these people, but only for each power plant. Thus, some people are counted more than once, and some people receive greater annual doses than are reported by individual plants. In 1993, there were about 27,000 of these people (Burrows and Hagemeyer 2006). Over the years, doses to transient workers at nuclear power plants have been decreasing in the same way as doses to more permanent workers, going from an average of 0.49 rem in 1993 to 0.32 rem in 2005 (Burrows and Hagemeyer 2006). In 2005, three transient workers received whole body doses between 3 and 4 rem, and none received more than 4 rem (Burrows and Hagemeyer 2006).

A decreasing trend in the highest annual collective dose is somewhat apparent, as is a decreasing trend for the average collective dose. In addition to decreases in collective dose,

Table 3.9-12. Number of Workers at BWRs and PWRs Who Received Whole-Body Doses Within Specified Ranges During 2005

Dose Range (rem)	BWRs	PWRs	Total
<0.1 (measurable)	18,235	28,209	46,444
0.1 to 0.25	7443	10,311	17,754
0.25 to 0.50	4848	4343	9191
0.50 to 0.75	1,74	1160	2904
0.75 to 1.00	706	398	1104
1.00 to 2.00	521	162	683
2.00 to 3.00	17	0	17
3.00 to 4.00	0	0	0
4.00 to 5.00	0	0	0
5.00 to 6.00	0	0	0
6.00 to 12.00	0	0	0
>12	0	0	0
Total	25,449	57,125	82,574

Source: Burrows and Hagemeyer 2006
Note: To convert rem to Sv, multiply by 0.01.

the average annual dose per nuclear plant worker decreased during this period (1993 through 2005) from 0.31 to 0.18 rem for BWRs and from 0.25 to 0.12 rem for PWRs (Table 3.9-11). A breakdown of the number of individual workers receiving doses in different ranges for 2005 is provided in Table 3.9-12. These data demonstrate that 94 percent of plant radiation workers received less than 1 rem, and no worker received more than 4 rem. Overall data presented in Tables 3.9-1 through 3.9-6 provide evidence that doses to nearly all radiation workers are far below the worker dose limit established by 10 CFR Part 20, and that the continuing efforts to maintain doses at ALARA levels have been successful.

As mentioned in Section 3.9.1.1, under 10 CFR 20.2202 and 10 CFR 20.2203, the NRC requires that all licensees submit reports of all occurrences involving personnel radiation exposures and releases of radioactive material that exceed certain control levels. For 2003 through 2005, there was no occurrence reported for nuclear power reactors (Burrows and Hagemeyer 2006).

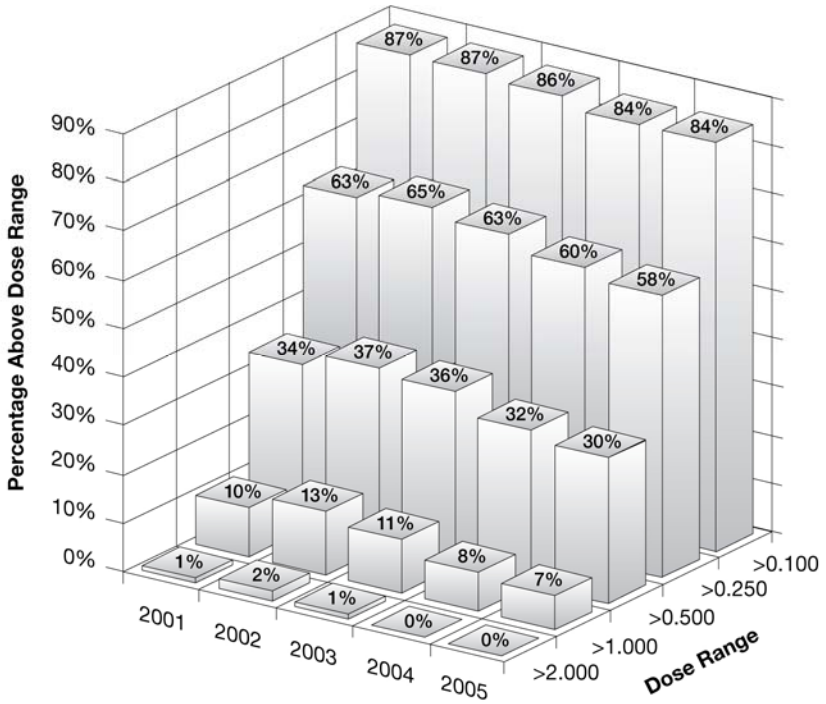

Figure 3.9-2. Collective Dose Distribution for All Commercial U.S. Reactors by Dose Range (rem) for 2001 through 2005 (Source: Burrows and Hagemeyer 2006)

3.9.1.3 Public Radiological Exposures

Commercial nuclear power plants, under controlled conditions, release small amounts of radioactive materials to the environment during normal operation. Radioactive waste management systems are incorporated into each plant. They are designed to remove most of the fission-product radioactivity that leaks from the fuel, as well as most of the activation- and corrosion-product radioactivity produced by neutrons in the vicinity of the reactor core. The amounts of radioactivity released through vents and discharge points to areas outside the plant boundaries are recorded and published annually in the radioactive effluent release reports for each facility. These reports are publicly available on the NRC's document management system, ADAMS. The effluent releases result in radiation doses to humans. Nuclear power plant licensees must comply with Federal regulations (e.g., 10 CFR Part 20, Appendix I to 10 CFR Part 50, 10 CFR Part 50.36a, and 40 CFR Part 190) and technical specifications in the operating license.

Table 3.9-13. Collective and Average CEDE for Commercial U.S. Nuclear Power Plant Sites in 2005

Plant	Number of Individuals with Measurable CEDE	Collective CEDE (person-rem)	Average Measurable CEDE (rem)
Duane Arnold	1	0.010	0.010
Arkansas	6	0.226	0.038
Browns Ferry	117	0.396	0.003
Brunswick	1	0.029	0.029
Columbia	2	0.019	0.010
Comanche Peak	3	0.072	0.024
Cooper	12	0.189	0.016
Davis-Besse	1	0.002	0.002
Hatch	1	0.022	0.022
Limerick	11	0.074	0.007
Millstone 1	2	0.025	0.013
Monticello	1	0.011	0.011
North Anna	1	0.017	0.017
Oconee	11	0.224	0.020
Palo Verde	9	0.264	0.029
Point Beach	2	0.018	0.009
Quad Cities	5	0.070	0.014
San Onofre	1	0.001	0.001
Sequoyah	23	0.063	0.003
St. Lucie	6	0.039	0.007
Summer	3	0.030	0.010
Susquehanna	4	0.021	0.005
Three Mile Island 1	1	0.018	0.018
Vermont Yankee	10	0.072	0.007
Vogtle	1	0.015	0.015
Watts Bar	170	2.869	0.017
Wolf Creek	3	0.007	0.002

Source: Burrows and Hagemeyer 2006
Note: To convert rem to Sv, multiply by 0.01.

Potential environmental pathways through which persons may be exposed to radiation originating in a nuclear power plant include the atmospheric and aquatic pathways. Radioactive materials released under controlled conditions include fission products and activation products. Fission product releases consist primarily of the noble gases and some of the more volatile materials like tritium, isotopes of iodine, and cesium. These materials are monitored carefully before release to determine whether the limits on releases can be met. Releases to the aquatic pathways are similarly monitored. Radioactive materials in the liquid effluents are processed in radioactive waste treatment systems. The major radionuclides released to aquatic systems have been tritium, isotopes of cobalt, and cesium.

When an individual is exposed to radioactive materials released by the plant into air or water pathways, the dose is determined in part by the amount of time spent in the vicinity of the source or the amount of time the radionuclides inhaled or ingested are retained in the individual's body (exposure). The consequences associated with this exposure are evaluated by calculating the dose. The major exposure pathways include the following:

- Inhalation of contaminated air;
- Drinking milk or eating meat from animals that graze on open pasture on which radioactive contamination may be deposited;
- Eating vegetables grown near the site; and
- Drinking (untreated) water or eating fish caught near the point of discharge of liquid effluents.

Radiation doses are calculated for the maximally exposed individual (MEI) (that is, the real or hypothetical individual potentially subject to maximum exposure). Doses are calculated by using site-specific data where available. For those cases in which site-specific data are not readily available, conservative (overestimating) assumptions are used to estimate dose. Members of the general public are also exposed when the LLW is shipped offsite. The public radiation exposures from radioactive material transportation have been addressed in Table S-4 of 10 CFR Part 51. Table S-4 indicates that the cumulative dose to the exposed public from the transport of both LLW and spent fuel is estimated to be about 0.03 person-Sv (3 person-rem) per reactor year (see Section 4.12.1.1).

3.9.1.3.1 Effluent Pathways for Calculations of Dose Commitment to the Public

Radioactive effluents can be divided into several groups on the basis of their physical characteristics. Among the airborne effluents, the radioisotopes of the noble gases krypton, xenon, and argon neither deposit on the ground nor are absorbed and accumulated within living

organisms; therefore, the noble gas effluents act primarily as a source of direct external radiation emanating from the effluent plume. For these effluents, dose calculations are performed for the site boundary where the highest external-radiation doses to a member of the general public are estimated to occur.

A second group of airborne radioactive effluents – the fission-product radioiodines and tritium – are also gaseous, but some of them can be deposited on the ground or inhaled during respiration. For this class of effluents, estimates are made of direct external radiation doses from ground deposits (as well as exposure to the plume). Estimates are also made of internal radiation doses to total body, thyroid, bone, and other organs from inhalation and from vegetable, milk, and meat consumption.

A third group of airborne effluents consists of particulates and includes fission products, such as cesium and strontium, and activated corrosion products, such as cobalt and chromium. These effluents contribute to direct external radiation doses and to internal radiation doses through the same pathways as those described above for the radioiodine. Doses from the particulates are combined with those from the radioiodines and tritium for comparison with one of the design objectives of Appendix I to 10 CFR Part 50.

Liquid effluent constituents could include fission products such as strontium and iodine; activation and corrosion products, such as sodium, iron, and cobalt; and tritiated water. These radionuclides contribute to the internal doses through the pathways described above from fish consumption, water ingestion (as drinking water), and consumption of meat or vegetables raised near a nuclear plant and using irrigation water, as well as from any direct external radiation from recreational use of the water near the point of a plant's discharge.

The release of each radioisotope and the site-specific meteorological and hydrological data serve as input to radiation-dose models that estimate the maximum radiation dose that would be received outside the facility by way of a number of pathways for individual members of the public and for the general public as a whole. These models and the radiation-dose calculations are discussed in Revision 1 of Regulatory Guide 1.109 (NRC 1977).

Doses from all airborne effluents except the noble gases are calculated for individuals at the location or source point (e.g., site boundary, garden, residence, milk cow or goat, meat animal) where the highest radiation dose to a member of the public has been established from each applicable pathway (e.g., ground deposition, inhalation, vegetable consumption, milk consumption, meat consumption). Only those pathways associated with airborne effluents that are known to exist at a single location are combined to calculate the total maximum exposure to an exposed individual. Pathway doses associated with liquid effluents are conservatively combined without regard to any single location but are assumed to be associated with the maximum exposure of an individual.

A number of possible exposure pathways to humans are evaluated to determine the impact of routine releases from each nuclear facility on members of the general public living and working outside the site boundaries. A detailed listing of these exposure pathways would include external radiation exposure from gaseous effluents, inhalation of iodines and particulate contaminants in the air, drinking milk from a cow or goat or eating meat from an animal that grazes on open pasture near the site on which iodines or particulates may be deposited, eating vegetables from a garden near the site (that may be contaminated by similar deposits), and drinking water or eating fish or invertebrates caught near the point of liquid effluent discharge. Other, less important exposure pathways may include external irradiation from surface deposition; eating of animals and crops grown near the site and irrigated with water contaminated by liquid effluents; shoreline, boating, and swimming activities; drinking potentially contaminated water; and direct radiation being emitted from the plant itself. Calculations for most pathways are limited to a radius of 80 km (50 mi). For this study, effluent and MEI dose information was collected from a series of publicly available annual radioactive effluent release reports that licensees submit to NRC every year.

3.9.1.3.2 Radiological Monitoring

Background measurements at all reactor sites were obtained during the preoperational phase of the monitoring program. Thus, each facility has characterized the background levels of radioactivity and radiation and their variations among the anticipated important exposure pathways in the areas surrounding the facilities. The operational, offsite radiological monitoring program is conducted at each site to provide data on measurable levels of radiation and radioactive materials in the site environs in accordance with 10 CFR Parts 20 and 50. The program assists and provides backup support to the effluent-monitoring program described in NRC Regulatory Guide 1.21 (NRC 1974). Such environmental monitoring programs are conducted to augment effluent monitoring and dose calculations and to ensure that unanticipated buildups of radioactivity have not occurred in the environment.

The environmental monitoring programs can also identify the existence of effluents from unmonitored release points. An annual survey (land census) identifies changes in the use of unrestricted areas to provide a basis for modifying the monitoring programs to reflect a new exposure pathway or a different site-specific dose calculation parameter. The results of the environmental monitoring program are documented by each licensee in the annual radiological environmental monitoring reports and submitted to NRC every year.

3.9.1.3.3 Public Radiation Doses

Table 3.9-14 shows the total body dose to the public, ground-level air dose, and dose to a critical organ for three years (2004 through 2006) from gaseous effluent releases for several PWRs and BWRs. The dose varies from year to year and also from reactor to reactor. The

Table 3.9-14. Doses from Gaseous Effluent Releases for 2004 through 2006

Reactor Name	No. of Reactors	2004 Total Body (mrem)	2004 Gamma (mrad)	2004 Beta (mrad)	2004 Critical Organ (mrem)
PWRs					
Comanche Peak[b]	2	1.95×10^{-2}	2.05×10^{-3}	8.00×10^{-4}	1.95×10^{-2}
D.C. Cook[b]	2	8.00×10^{-2}	9.50×10^{-4}	2.65×10^{-3}	NR[a]
Indian Point 2	1	NR	4.35×10^{-3}	1.75×10^{-2}	6.00×10^{-3}
Indian Point 3	1	NR	1.20×10^{-4}	7.70×10^{-4}	8.00×10^{-4}
H.B. Robinson	1	NR	4.00×10^{-3}	1.70×10^{-3}	8.20×10^{-2}
San Onofre[b]	2	NR	4.05×10^{-2}	5.00×10^{-2}	6.50×10^{-3}
Surry[b]	2	NR	3.40×10^{-4}	4.55×10^{-4}	3.75×10^{-2}
BWR					
Hatch 1	1	7.20×10^{-3}	5.20×10^{-5}	6.80×10^{-5}	7.20×10^{-3}
Hatch 2	1	1.00×10^{-2}	4.30×10^{-5}	5.80×10^{-5}	1.10×10^{-2}
Vermont Yankee	1	NR	0	0	8.00×10^{-3}
Limerick[b]	2	1.05×10^{-3}	1.65×10^{-3}	1.00×10^{-3}	3.55×10^{-3}
Columbia	1	3.70×10^{-2}	1.90×10^{-3}	6.80×10^{-4}	3.80×10^{-2}

Reactor Name	No. of Reactors	2005 Total Body (mrem)	2005 Gamma (mrad)	2005 Beta (mrad)	2005 Critical Organ (mrem)
PWRs					
Comanche Peak[b]	2	1.85×10^{-2}	2.05×10^{-2}	5.00×10^{-2}	1.65×10^{-1}
D.C. Cook[b]	2	7.00×10^{-2}	1.30×10^{-3}	2.00×10^{-3}	NR
Indian Point 2	1	NR	9.00×10^{-5}	6.00×10^{-4}	6.50×10^{-4}
Indian Point 3	1	NR	1.10×10^{-3}	6.00×10^{-3}	3.60×10^{-3}
H.B. Robinson	1	NR	9.70×10^{-3}	3.60×10^{-3}	7.40×10^{-2}
San Onofre[b]	2	NR	3.50×10^{-2}	4.90×10^{-2}	1.95×10^{-3}
Surry[b]	2	NR	8.00×10^{-4}	1.45×10^{-3}	7.50×10^{-2}
BWRs					
Hatch 1	1	8.60×10^{-3}	0	0	8.70×10^{-3}
Hatch 2	1	1.20×10^{-2}	0	0	1.20×10^{-2}
Vermont Yankee	1	NR	3.30×10^{-2}	3.20×10^{-3}	1.10×10^{-2}
Limerick[b]	2	1.20×10^{-3}	1.80×10^{-3}	1.25×10^{-3}	4.35×10^{-2}
Columbia	1	2.80×10^{-2}	2.70×10^{-3}	9.50×10^{-4}	3.00×10^{-2}

Table 3.9-14. (cont.)

Reactor Name	No. of Reactors	2006 Total Body (mrem)	2006 Gamma (mrad)	2006 Beta (mrad)	2006 Critical Organ (mrem)
PWRs					
Comanche Peak[(b)]	2	2.30×10^{-2}	3.60×10^{-3}	9.00×10^{-4}	8.50×10^{-2}
D.C. Cook[(b)]	2	1.35×10^{-1}	2.60×10^{-3}	2.80×10^{-2}	NR
Indian Point 2	1	NR	2.55×10^{-3}	9.00×10^{-3}	6.00×10^{-3}
Indian Point 3	1	NR	5.40×10^{-5}	1.60×10^{-4}	1.10×10^{-3}
H.B. Robinson	1	NR	2.50×10^{-3}	8.80×10^{-4}	1.40×10^{-1}
San Onofre[(b)]	2	NR	3.70×10^{-2}	6.00×10^{-2}	6.30×10^{-3}
Surry[(b)]	2	NR	5.50×10^{-4}	8.50×10^{-4}	7.00×10^{-2}
BWRs					
Hatch 1	1	7.20×10^{-3}	4.40×10^{-6}	1.30×10^{-5}	7.20×10^{-3}
Hatch 2	1	2.30×10^{-2}	0	0	2.30×10^{-2}
Vermont Yankee	1	NR	8.80×10^{-5}	1.40×10^{-2}	9.60×10^{-3}
Limerick[(b)]	2	7.50×10^{-4}	1.10×10^{-3}	7.00×10^{-4}	2.35×10^{-3}
Columbia	1	2.00×10^{-2}	6.10×10^{-3}	2.10×10^{-3}	2.00×10^{-2}

(a) NR = not reported in the site's effluent release report.
(b) There is more than one plant operating at these reactor sites, and the combined doses were reported in the annual effluent release report. The reported doses were divided by the number of reactors to get the dose per reactor.
Sources: Each site's annual effluent release reports
Note: To convert mrem to mSv, multiply by 0.01.

maximum total body dose is 0.14 mrem, maximum dose to a critical organ is 0.17 mrem, maximum ground-level air dose from gamma radiation is 0.04 mrad, and maximum ground-level dose from beta radiation is 0.06 mrad. All doses are much less than the design objectives shown in Table 3.9-2.

Table 3.9-15 shows the total body dose to the public and dose to a critical organ for 3 years (2004 through 2006) from liquid effluent releases for the same PWRs and BWRs. The total body dose and dose to critical organ of the MEI from liquid effluent releases varies from year to year and also from reactor to reactor. The maximum total body dose is 0.06 mrem, and the maximum dose to a critical organ is 0.06 mrem. The doses are much less than the design objectives shown in Table 3.9-2.

Table 3.9-16 presents the dose to the MEI for the years 2004 to 2006 for a few PWRs and BWRs. Under most circumstances, the dose calculations, which were made by the sites,

Table 3.9-15. Dose from Liquid Effluent Releases for 2004 through 2006

Reactor Name	No. of Reactors	2004 Total Body (mrem)	2004 Critical Organ (mrem)	2005 Total Body (mrem)	2005 Critical Organ (mrem)	2006 Total Body (mrem)	2006 Critical Organ (mrem)
PWRs							
Comanche Peak[(a)]	2	5.50×10^{-2}	5.50×10^{-2}	6.00×10^{-2}	6.00×10^{-2}	5.00×10^{-2}	5.00×10^{-2}
D.C. Cook[(a)]	2	1.30×10^{-2}	1.40×10^{-2}	8.50×10^{-3}	1.00×10^{-2}	1.30×10^{-2}	1.30×10^{-2}
H.B. Robinson	1	6.60×10^{-4}	7.20×10^{-4}	9.20×10^{-5}	9.60×10^{-5}	3.50×10^{-4}	3.60×10^{-4}
Indian Point 2	1	3.20×10^{-3}	1.10×10^{-2}	8.10×10^{-4}	1.30×10^{-3}	8.80×10^{-4}	1.30×10^{-3}
Indian Point 3	1	2.00×10^{-4}	5.50×10^{-4}	4.50×10^{-4}	5.40×10^{-4}	1.30×10^{-4}	1.60×10^{-4}
San Onofre[(a)]	2	2.55×10^{-3}	1.00×10^{-2}	1.35×10^{-3}	4.00×10^{-3}	1.10×10^{-3}	3.90×10^{-3}
Surry[(a)]	2	1.30×10^{-4}	3.60×10^{-4}	1.20×10^{-4}	4.55×10^{-4}	1.55×10^{-4}	5.50×10^{-4}
BWRs							
Hatch 1	1	4.20×10^{-3}	6.30×10^{-3}	3.20×10^{-3}	4.80×10^{-3}	2.60×10^{-3}	3.80×10^{-3}
Hatch 2	1	9.50×10^{-4}	1.40×10^{-3}	1.20×10^{-3}	1.90×10^{-3}	3.50×10^{-4}	4.50×10^{-4}
Vermont Yankee	1	0	0	0	0	0	0
Limerick[(a)]	2	7.50×10^{-4}	1.05×10^{-3}	5.50×10^{-4}	5.50×10^{-4}	1.10×10^{-3}	1.15×10^{-3}
Columbia	1	0	0	0	0	0	0

(a) There are two or more plants operating at these reactor sites. The reported doses in the annual effluent release reports were divided by 2 to get the dose per reactor.
Source: Each site's annual effluent release reports
Note: To convert mrem to mSv, multiply by 0.01.

overestimate the dose because of conservative assumptions. The table shows that the MEI doses varied from about 0.02 mrem at the Columbia Generating Station in 2006 to about 15 mrem at Vermont Yankee in 2006. For most reactors, the annual MEI doses are a few millirem or less. At Vermont Yankee, the dose is relatively high because of the close proximity of the MEI to the plant. Over 99.9 percent of the individual's dose is attributed to direct radiation from the plant (NRC 2007f).

3.9.1.3.4 Radiological Exposure from Naturally Occurring and Artificial Sources

Table 3.9-17 identifies background doses to a typical member of the U.S. population as summarized in NCRP (1987). A total average annual effective dose equivalent of 360 mrem/yr to members of the U.S. population is contributed by two primary sources: naturally occurring radiation and artificial sources (including human enhancement of natural sources) of radiation. Natural radiation sources other than radon result in 27 percent of the typical radiation dose received. The larger source of radiation dose (55 percent) is from radon, particularly because

Table 3.9-16. Total Effective Dose Equivalent (mrem) to the Maximally Exposed Individual (MEI) for 2004 Through 2006

Site[(a)]	No. of Reactors	2004	2005	2006
PWRs				
D.C. Cook	2	0.108	0.095	0.182
Indian Point	2	<4.0	<4.1	<7.1
San Onofre	2	0.29	0.4	0.6
BWRs				
Vermont Yankee	1	13.3	13.5	15.3
Columbia	1	0.037	0.028	0.019

(a) Some of the reactors in Tables 3.9-9 and 3.9-10 are not included because the dose to the MEI was not reported in the site's effluent release reports for these reactors.
Source: Each site's annual effluent release reports

of homes and other buildings that trap radon and significantly enhance its dose contribution over open-air living. The remaining 18 percent of the average annual effective dose equivalent consists of radiation from medical procedures (x-ray diagnosis, 11 percent, and nuclear medicine, 4 percent) and from consumer products (3 percent). For consumer products, the chief contributor is radon in domestic water supplies, building materials, mining, and agricultural products, as well as coal burning. Smokers are additionally exposed to the natural radionuclide polonium-210 in tobacco, resulting in the irradiation of a small region of the bronchial epithelium to up to 16,000 mrem/yr. Tobacco products are the dominant contributor to individual body organ doses, but the conversion of the organ dose to the effective dose equivalent is too uncertain for NCRP to include it in its tables. However, NCRP used a weighting factor of 0.08 and estimated effective dose equivalents to an average smoker of 1300 mrem/yr and to an average member of the U.S. population of 280 mrem/yr (NCRP 1987). Radiation exposures from occupational activities, the nuclear fuel cycle, and miscellaneous environmental sources (including nuclear weapons testing fallout) contribute insignificantly to the total average effective dose equivalent.

3.9.1.3.5 Inadvertent Liquid Radioactive Releases

As mentioned before, all commercial nuclear power plants routinely release radioactive material to the environment in the form of liquids and gases in accordance with regulations (Table 3.9-2). Each year, plant operators submit an effluent release report that documents the amount of radioactive material released to the environment during the year. This report also includes the public dose impact from the releases. Plant operators also conduct environmental

Table 3.9-17. Average Annual Effective Dose Equivalent of Ionizing Radiation to a Member of the U.S. Population

Source	Effective Dose Equivalent	
	mrem	Percent of Total
Natural		
Cosmic	27	8
Terrestrial	28	8
Internal	39	11
Total natural	94	27
Artificial		
Radon (human enhanced)	200	55
Medical		
X-ray diagnosis	39	11
Nuclear medicine	14	4
Consumer products	11	3
Other		
Occupational	0.9	< 0.3
Nuclear fuel cycle	< 1.0	< 0.03
Fallout	< 1.0	< 0.03
Miscellaneous	< 1.0	< 0.03
Total artificial	266	73
Total natural and artificial	360	100

Source: Adapted from NCRP 1987

monitoring in the vicinity and submit an environmental monitoring report every year to the NRC. However, some sites have had inadvertent radioactive liquid releases that were not initially monitored.

After the discovery of a leak, each licensee performed appropriate monitoring and assessed the radiation exposure to a member of the public. In all cases, the calculated dose to a member of the public was below the ALARA design objectives in Appendix I to 10 CFR Part 50.

Table 3.9-18 provides a list of the known inadvertent releases to the environment primarily from 1996 through 2006.

Table 3.9-18. Inadvertent Releases of Radioactive Liquids at Nuclear Power Plants

Site	Date of Release Discovery	Source of Release	Radionuclides Detected
Braidwood	March 2005	Vacuum breaker valves on the circulating water blowdown line	Tritium
Byron	February 2006	Vacuum breaker valves on the circulating water blowdown line	Tritium
Callaway	June 2006	Vacuum breaker valves on the circulating water blowdown line	Tritium, cobalt-58, cobalt-60, cesium-134, and cesium-137
Dresden	August 2004, January 2006	Non-safety-related high-pressure coolant injection suction and return line	Tritium
Hatch	December 1986	Fuel transfer canal, because of operator action	Tritium
Indian Point	August 2005 – Unit 1 leakage predates August 2005	Unit 1 and Unit 2 spent fuel pools	Tritium, nickel-63, cesium-137, strontium-90, and cobalt-60
Oyster Creek	September 1996	Condensate transfer system, because of operator action	Tritium
Palo Verde	March 2006	Rain condensing onto property after a gaseous release	Tritium
Perry	March 2006	Feedwater system venturi	Tritium
Point Beach	1999	Retention pond	Tritium, cesium-137
Seabrook	June 1999	Spent fuel pool	Tritium
Salem	September 2002	Spent fuel pool	Tritium
Three Mile Island	May 2006	Condensate storage tank	Tritium
Watts Bar	August 2002	Effluent release pipe and spent fuel pool transfer tube sleeve	Tritium and mixed fission products

Source: NRC 2006c

After inadvertent releases of tritium that resulted in groundwater contamination at the Braidwood, Indian Point, Byron, and Dresden nuclear sites were recently detected, the NRC chartered a task force to conduct a lessons-learned review of these incidents. The task force also reviewed and evaluated public health and environmental impacts, along with many other aspects, such as regulatory framework and NRC inspection.

The impacts from inadvertent releases would be in addition to the impacts from routine effluent releases and would depend on many factors, such as the amount and type of radionuclide,

environmental transport, and how the receptor would come in contact with the contaminated media. For example, tritium enters the body when people eat or drink food or water that contains tritium or when they absorb it through their skin. People can also inhale tritium as a gas in the air. Once tritium enters the body, it quickly distributes uniformly throughout the soft tissue. At the Braidwood site between March 2005 and 2006, the plant operator sampled water in the drinking water wells of several nearby residents and found tritium contamination levels in a range of 1400 to 1600 pCi/L above background levels. These tritium contamination levels are much lower than the EPA's drinking water standard of 20,000 pCi/L for tritium.

The task force focused on the inadvertent releases that had the potential to have a measurable dose impact on a member of the public and/or the offsite environment on the basis of the source's strength and its potential for movement offsite. Table 3.9-19 lists the maximum tritium contamination detected onsite and at offsite locations from the inadvertent release events. The table shows that currently, for most locations, contamination has not migrated offsite.

The most significant conclusion of the task force regarded the lack of public health impacts. Although there have been number of industry events in which radioactive liquid was released to the environment in an unplanned and unmonitored fashion, based on the data available, the task force did not identify any instances where the health of the public was impacted (NRC 2006c).

3.9.1.3.6 Tooth Fairy Issue

Studies published by the Radiation Public Health Project assert that strontium-90 levels in the environment are rising and are responsible for cancers in children and infant mortality. This group of studies also claim that radioactive effluents from nuclear power plants are directly responsible for the increases in strontium-90 concentrations in baby teeth (Gould et al. 2000; Mangano et al. 2003). Consequently, the issue is often referred to as the "tooth fairy" issue.

Strontium-90 does not occur naturally. It comes from three sources: (1) fallout from aboveground explosions from testing of nuclear weapons worldwide from 1963 to 1980, (2) radioactive releases from the 1986 Chernobyl nuclear power plant accident in the Ukraine, and (3) radioactive releases from nuclear power plants into the environment.

Approximately 16.8 million Ci of strontium-90 were produced and globally dispersed in atmospheric nuclear weapons testing until 1980. Also, as a result of the Chernobyl accident, approximately 216,000 Ci of strontium-90 were released into the atmosphere (UNSCEAR 2000). The total annual release of strontium-90 into the atmosphere from all 104 commercial nuclear power plants operating in the United States is typically 1/1000th of a curie (NRC 1993). At an individual nuclear power plant, the amount of strontium-90 is so low

Table 3.9-19. Dose from Inadvertent Releases of Radioactive Liquids at Nuclear Power Plants

Site	Maximum Tritium Contamination (pCi/L) Detected Withinwithin the Site Boundary	Maximum Water Contamination (pCi/L) at Offsite Locations	Receptor and Pathways	Yearly Dose (mrem)
Braidwood	225,000 to 250,000	1400 to 1600	Child: water ingestion; Adult: fish and water ingestion	Child: 0.16 Adult: 0.07
Byron	3800	None detected	NA[(a)]	NA
Callaway	20,000 to 200,000	None detected	NA	NA
Dresden	486,000 to 680,000	None detected	NA	NA
Hatch[(b)]	See footnote (a)	None detected at offsite water sources – long-term monitoring in place	Negligible	Negligible
Indian Point[(c)]	200,000 for tritium 100 for nickel-63 50 for strontium-90	Approximation made in dose calculations	MEI[(d)]	0.0021
Oyster Creek	16,000	None detected	NA	NA
Palo Verde	71,400	None detected	NA	NA
Perry	60,000	None detected	NA	NA
Point Beach	14,250	None detected	NA	NA
Seabrook	750,000	Groundwater plume has not migrated offsite	Negligible	Negligible
Salem[(e)]	15,000,000	None detected	NA	NA
Three Mile Island	45,000	None detected	NA	NA
Watts Bar	30,000	Groundwater plume has not migrated offsite	Negligible	Negligible

(a) NA = Not applicable because water contamination was not detected at offsite locations.
(b) Approximately 124,000 gal of liquid containing 0.2 Ci of tritium and 0.373 Ci of mixed fission products were released to a swamp onsite.
(c) Source for data is Indian Point (2005).
(d) MEI = Maximally Exposed Individual..
(e) Extensive groundwater remediation program in place.
Source: NRC 2006c
Note: To convert mrem to mSv, multiply by 0.01.

that it is usually at or below the minimum detectable activity of sensitive detection equipment. For this reason, any strontium-90 detected in areas near a nuclear power plant would probably not have come from the plant but would instead be attributed to fallout from nuclear weapons testing or from the Chernobyl accident.

The NRC has established strict limits on the amount of radioactive emissions allowed to be released from nuclear plants to the environment and the resulting exposure for members of the

public and plant workers (see Table 3.9-2). All power plant operators are required to monitor radioactive airborne and liquid discharges from the plant and to file a report of these discharges annually with the NRC. These reports, which are publicly available, list the radioactive isotopes released, the quantity released, and the radiation dose to the public. The concentrations of radionuclides released into the environment from a nuclear facility are generally too low to be measurable outside the plant's boundary. In addition to limits on effluent releases, plant operators maintain an environmental monitoring program that is reviewed and inspected regularly by the NRC to ensure that the program complies with its requirements. To demonstrate that the plant is within the regulatory limits, operators regularly sample and analyze the surrounding soil, vegetation, cow's milk, air, aquatic biota, and water. In a given year, a plant operator samples and analyzes hundreds of environmental samples. The results of environmental monitoring and assessment efforts are provided to the NRC in an annual report, which is available to the public. It is reasonable to conclude that strontium-90 would be seen in the environment well before it is seen in baby teeth. In order for it to be in the environment from nuclear power plants, it would have to be seen in significant quantities in the effluent stream from these facilities. However, strontium-90 is not present in the effluents at such levels (NRC 2007g).

Several studies have been conducted to examine health effects around nuclear power plants (National Cancer Institute 1990; ACS 2001; FDOH 2001; IDPH 2000, 2006). The National Cancer Institute looked at cancer mortality rates around 52 nuclear power plants and 10 other nuclear facilities. The study concluded there was no evidence that nuclear facilities may be linked causally with excess deaths from leukemia or from other cancers in populations living nearby. The ACS in 2001 concluded that cancer clusters do not occur more often near nuclear plants than they do by chance elsewhere. In 2001, the Florida Bureau of Environmental Epidemiology reviewed claims that there are striking increases in cancer rates in southeastern Florida counties caused by increased radiation exposures from nuclear power plants. However, when they used the same data to reconstruct the calculations on which the claims were based, Florida officials were not able to identify unusually high rates of cancers in these counties when rates were compared with rates in the rest of the state of Florida and the nation (FDOH 2001). In 2000, the Illinois Department of Public Health compared childhood cancer statistics for counties with nuclear power plants to similar counties without nuclear plants and found no statistically significant difference (IDPH 2000). In 2006, the IDPH studied pediatric cancer incidence and mortality rates for children near nuclear reactor sites. No evidence of an increased trend in the cancer incidence rate after startup of nuclear power plants was found (IDPH 2006). Boice et al. (2005) evaluated the rates of total cancer, leukemia, and cancer of brain tissue and other nervous tissue in children and across all ages in St Lucie County with respect to the years before and after the nuclear power station began operation and compared the results with rates in two similar counties in Florida (Polk and Volusia). Over the prolonged period 1950 through 2000, no unusual patterns of childhood cancer mortality were found for St Lucie County as a whole. In particular, no unusual patterns of childhood cancer mortality

were seen in relation to the startup of the St Lucie nuclear power station in 1976. Further, there were no significant differences in mortality between the study and comparison counties for any cancer in the time period after the power station was in operation (Boice et al. 2005).

On the basis of all the preceding discussion, there is little or no credibility to the claims made in the studies published by the Radiation Public Health Project.

3.9.1.4 Risk Estimates from Radiation Exposure

In estimating the health effects resulting from both occupational and offsite radiation exposures as a result of operating nuclear power facilities, the normal probability coefficients for stochastic effects recommended by the ICRP (ICRP 1991) were used. The coefficients consider the most recent radiobiological and epidemiological information available and are consistent with the United Nations Scientific Committee on the Effects of Atomic Radiation. The coefficients used (Table 3.9-20) are the same as those recently published by ICRP in connection with a revision of its recommendations (ICRP 1991). Excess hereditary effects are listed separately because radiation-induced effects of this type have not been observed in any human population, as opposed to excess malignancies that have been identified among populations receiving instantaneous and near-uniform exposures in excess of 10 rem. Details regarding the risk of radiation-induced health effects are provided in Section D.8 in Appendix D.

In 2006, the National Research Council's Advisory Committee on the Biological Effects of Ionizing Radiation (BEIR) published BEIR-VII, entitled *Health Risks from Exposure to Low Levels of Ionizing Radiation* (BEIR 2006).

Table 3.9-20. Nominal Probability Coefficients Used in ICRP (1991)[(a)]

Health Effect	Occupational	Public
Fatal cancer	4	5
Hereditary	0.6	1

(a) Estimated number of excess effects among 10,000 people receiving 10,000 person-rem. Coefficients are based on "central" or "best" estimates.
Source: ICRP 1991

BEIR-VII provides estimates of the risk of incidence and mortality for males and females (see Table D.8-4 in Appendix D). If the total fatal cancer risk is the sum of cancer deaths from all solid cancers and leukemia, then the fatal cancer risk coefficient for the general public would be 6×10^{-4}/person-rem (see Table D.8-5 in Appendix D). The fatal cancer risk for the general public based on ICRP is 5×10^{-4}/person-rem (Table 3.9-20). There is a difference of approximately 20 percent in the fatal cancer risk coefficient based on ICRP recommendation and the BEIR-VII report. The difference of 20 percent is within the margin of uncertainty associated with these estimates. See Section D.8.1.4 in Appendix D for a detailed discussion of the BEIR VII report.

The NRC completed a review of the BEIR VII report and documented its findings in the Commission paper SECY-05-0202, "Staff Review of the National Academies Study of the

Health Risks from Exposure to Low Levels of Ionizing Radiation (BEIR VII)," dated October 29, 2005 (NRC 2005b) (ADAMS accession number ML052640532). In this paper, the NRC concluded that the findings presented in the BEIR VII report agree with the NRC's current understanding of the health risks from exposure to ionizing radiation. The NRC agreed with the BEIR VII report's major conclusion that current scientific evidence is consistent with the hypothesis that there is a linear, no-threshold dose response relationship between exposure to ionizing radiation and the development of cancer in humans. This conclusion is consistent with the process the NRC uses to develop its standards of radiological protection. Therefore, the NRC's regulations continue to be adequately protective of public health and safety and the environment.

If the occupational worker is exposed at 10 CFR Part 20 dose limits for 1 year, the probability of developing fatal cancer (on the basis of ICRP recommendations) from exposure due to an operating nuclear reactor is equal to 2×10^{-3} on the basis of ICRP recommendations. However, the average individual worker doses are much less than the dose limits (see Table 3.9-4), and, at the doses observed, the probability of developing fatal cancer would be in the range of 1.2×10^{-4} to 4.8×10^{-5}.

If the member of the public is exposed at 40 CFR Part 190 dose limits, the probability of developing fatal cancer (on the basis of ICRP recommendations) from exposure resulting from operating a nuclear reactor is equal to 1.25×10^{-5}. However, the MEI doses are much less than the dose limits (see Table 3.9-16), and, at the doses observed, the probability of developing fatal cancer would be in the range of 7.7×10^{-6} to 1.0×10^{-8}.

3.9.1.5 Conclusion

Radiation doses to nuclear power plant workers and members of the public from the current operation of nuclear power plants have been examined from a variety of perspectives. The radiation doses were found to be well within design objectives and regulations in each instance. Therefore, the health impacts from radiation to the workers and the public are considered to be small.

3.9.2 Chemical Hazards

Chemicals enter the body through the skin, by inhalation, or by ingestion. Chemical exposure produces different effects on the body depending on the chemical and the amount of exposure. Chemicals can cause cancer, affect reproductive capability, disrupt the endocrine system, or have other health effects. Acute effects from chemical exposure occur immediately (e.g., when somebody inhales or ingests a poisonous substance such as cyanide). Chronic or delayed effects result in symptoms such as skin rashes, headaches, breathing difficulties, and nausea.

In nuclear power plants, chemical effects could result from discharges of chlorine or other biocides, small-volume discharges of sanitary and other liquid wastes, chemical spills, and heavy metals leached from cooling system piping and condenser tubing. Impacts of chemical discharges to human health are considered to be small if the discharges of chemicals to water bodies are within effluent limitations designed to ensure protection of water quality and if ongoing discharges have not resulted in adverse effects on aquatic biota.

The discharged chemicals, including chlorine and other biocides, are regulated by the NPDES permitting system of each nuclear power plant. Regulatory concerns about the toxic effects of chlorine and its combination products, as well as operating experience with controlling biofouling, have led many plants to eliminate the use of chlorine or reduce the amount used below the levels that were originally anticipated in the environmental statements associated with issuing the construction permit and operating license. Some power plants use mechanical cleaning methods or, because of the abrasive properties of particulates in the intake water, do not have to clean the condenser cooling system at all. Other plants chlorinate the condenser cooling or service water systems but can isolate certain portions for treatment (e.g., a single unit of a multi-unit plant), thereby allowing dilution to reduce the concentration of chlorine in the discharge. Because of these refinements and the process for modifying NPDES permit conditions as needed, water quality degradation from existing biocide usage at once-through nuclear power plants is controlled (see Section 3.5).

Minor chemical spills or temporary off-specification discharges from sanitary waste treatment systems and other low-volume effluents (e.g., excessive coliform counts or total suspended solids levels, pH outside of permitted range) were cited as common NPDES permit violations in the 1996 GEIS (NRC 1996). Such NPDES noncompliances have been variable, random in occurrence, and readily amenable to correction. These minor discharges or spills do not constitute widespread, consistent water quality degradation. Effects on water quality from minor chemical discharges and spills have been of small significance and have been mitigated as needed (NRC 1996). Significant cumulative impacts to water quality would not be expected because the small amounts of chemicals released by these minor discharges or spills are readily dissipated in the receiving water body. Spills and off-specification discharges occur seldom enough that regulatory agencies have expressed no concern about them with regard to operating nuclear power plants (NRC 1996).

Heavy metals (e.g., copper, zinc, and chromium) may be leached from condenser tubing and other heat exchangers and discharged by power plants as small-volume waste streams or corrosion products. Although all are found in small quantities in natural waters (and many are essential micronutrients), concentrations in the power plant discharge are controlled in the NPDES permit because excessive concentrations of heavy metals can be toxic to aquatic organisms (see Section 3.6). The ability of aquatic organisms to bioaccumulate heavy metals, even at low concentrations, has led to concerns about toxicity to both the humans and the biota

that consume contaminated fish and shellfish. For example, the bioconcentration of copper discharged from the Chalk Point plant (a fossil-fuel power plant on Chesapeake Bay) resulted in oyster “greening” (Roosenburg 1969). The bioaccumulation of copper released from the H.B. Robinson plant resulted in malformations and decreased reproductive capacity among bluegill in the cooling reservoir (Harrison 1985). At the Diablo Canyon nuclear plant, it was observed that the concentration of soluble copper in effluent water was high during the startup of water circulation through the condenser system after a shutdown (Harrison 1985). In all three examples of excessive accumulation of copper (Diablo Canyon, Chalk Point, and H.B. Robinson), replacement of the copper alloy condenser tubes with another material (e.g., titanium) eliminated the problem.

The EPA is responsible for the regulation of most chemicals that can enter the environment. The EPA administers the following Federal acts related to chemical contamination: the Federal Insecticide, Fungicide, and Rodenticide Act (FIFRA); Toxic Substances Control Act (TSCA); Resource Conservation and Recovery Act (RCRA); Safe Drinking Water Act (SDWA); Clean Air Act (CAA); and Comprehensive Environmental Response, Compensation and Liability Act (CERCLA).

Nuclear power plants are required to submit to the EPA and the State annual reports of the environmental releases of listed toxic chemicals manufactured, processed, or otherwise used above Federally and State-identified threshold quantities. Disposal of essentially all of the hazardous chemicals used at nuclear power plants is regulated by RCRA or NPDES permits. Nuclear power plants are required by the NRC to operate in compliance with all permits, therefore minimizing the impact on the environment, workers, and the public. Therefore, the health impacts from chemicals on workers and the public are considered small.

3.9.3 Microbiological Hazards

Some microorganisms associated with nuclear power plant cooling towers and thermal discharges can have deleterious impacts on the health of plant workers and the public. Microorganisms of concern include the enteric pathogens *Salmonella* spp. and *Shigella* spp., as well as *Pseudomonas aeruginosa* and thermophilic fungi. Tests for these pathogens are well established, and factors germane to their presence in aquatic environments are known and, in some cases, controllable. Other aquatic microorganisms normally present in surface waters have only recently been recognized as pathogenic for humans. Among these are Legionnaires’ disease bacteria (*Legionella* spp.) and free-living amoebae of the genera *Naegleria* and *Acanthamoeba*, the causative agents of various, although rare, human infections. Factors affecting the distribution of *Legionella* spp. and pathogenic free-living amoebae are not well understood. Simple, rapid tests for their detection and procedures for their control are not yet available.

Potential adverse health effects of microorganisms on nuclear power plant workers are an issue for plants that use cooling towers. The potential for adverse health effects on the public from microorganisms in thermal effluents is an issue for nuclear plants that use cooling ponds, lakes, or canals and that discharge to small rivers (defined in NRC 1996 as having an average flow of less than 2830 m^3/s [100,000 ft^3/s]). These issues are evaluated here by reviewing what is known about the organisms that are potentially enhanced by plant operation. Potential effects are described below.

3.9.3.1 Background Information on Microorganisms of Concern

Salmonella typhimurium, and *S. enteritidis* are two of the more common species of the Enterobacteriaceae that cause fever, abdominal cramps, and diarrhea. *Salmonella* spp. can occasionally establish localized infection (e.g., septic arthritis) or progress to sepsis. The affected groups include all ages, but groups at greatest risk for severe or complicated disease include infants, the elderly, and persons with compromised immune systems. *Salmonella* spp. can thrive at temperatures from 50 to 120°F (CDC 2007; Kendall 2007).

Shigella spp. is similar to *Salmonella* spp. in its mode of transmission but has a much shorter incubation period (1 to 7 days). It produces severe dysentery with production of a potent exotoxin. The optimum growth temperature for the organism is 99°F, but it can grow at much higher temperatures (NRC 1996).

Pseudomonas aeruginosa can be found in soil, humidifiers, hospital respirators, water, and sewage, and on the skin of healthy individuals. Certain strains can produce a potent endotoxin, and the organism can cause symptoms that include fever, bacteriuria, bacteremia, pneumonia, otitis, and opportunistic wound and ophthalmic infections. *Pseudomonas aeruginosa* is an opportunistic pathogen that causes serious and sometimes fatal infections in immunocompromised individuals. The organism produces toxins that are harmful to humans and animals. It has an optimal growth temperature of 98.6°F and can tolerate a temperature as high as 107.6°F (Todar 2004).

Thermophilic microorganisms can have optimum growth at temperatures of 122°F or more, a maximum temperature tolerance of up to 158°F, and a minimum tolerance of about 68°F (Deacon 2003).

Legionella spp. consists of at least 46 species and 70 serogroups. It is responsible for Legionnaires' disease, with the onset of pneumonia in the first two weeks of exposure. Risk groups for *Legionella* spp. include the elderly, cigarette smokers, persons with chronic lung or an immunocompromising disease, and persons receiving immunosuppressive drugs. A temperature range of 90 to 105ºF is best for *Legionella* spp. growth (CDC 2005).

Populations of the pathogenic amoeba flagellate *Naegleria fowleri* is the causative agent of human primary amoebic meningoencephalitis. The affected groups include all ages, but groups at greatest risk for severe or complicated disease include infants, the elderly, and persons with compromised immune systems. *Naegleria* spp. is ubiquitous in nature and can be enhanced in heated water bodies at temperatures ranging from 95 to 106°F or higher. This organism is rarely found in water cooler than 95°F, and infection rarely occurs in water temperatures of 95°F or less (Tyndall et al. 1989).

During the scoping meeting for the Calvert Cliffs license renewal SEIS, one member of the public raised an issue about the microorganisms that live in high radiation and extreme heat conditions (such as within the spent fuel pool) based on the article "Something's Bugging Nuclear Fuel" published in *Science News* (1998). The commenter asked that consideration be given to these types of organisms, the possibility of their mutation, and consequences if they escaped from the plant into the natural aquatic environment. The NRC consulted specialists in the field; the following is a summary of their conclusions as presented in the SEIS (NRC 1999):

- Many types of organisms can live in the temperature range of the spent fuel pools (100 to 150°F).

- There is a potential for mutation in all living organisms, but microbes that have high levels of radiation resistance have also developed extremely efficient repair systems.

- Organisms that are associated with thermal waters of the spent fuel pool are likely to die if they are transferred into the relatively much lower water temperatures typical of surface waters. If the organisms are truly adapted to the high temperatures typical of the spent fuel pool, they probably would not be able to survive and compete with the indigenous microorganisms of the relatively cold waters of the natural water sources.

In summary, the NRC concluded that microorganisms that live in high radiation and extreme heat conditions typical of the spent fuel pool do not pose a risk to humans or the environment.

3.9.3.2 Studies of Microorganisms in Cooling Towers

In 1981, cooling water systems at 11 nuclear power plants and associated control source waters were studied for the presence of thermophilic free-living amoebae, including *N. fowleri*. The presence of pathogenic *N. fowleri* in these waters was tested, and while all but one test site was positive for thermophilic free-living amoebae, only two test sites were positive for pathogenic *N. fowleri*. Pathogenic *N. fowleri* were not found in any control source waters (Tyndall 1981). In addition to testing for pathogenic amoebae in cooling water, testing for the presence of *Legionella* spp. was also done (Tyndall 1981). The concentrations of *Legionella* spp. in these waters were determined. In general, the artificially heated waters

showed only a slight increase (i.e., no more than tenfold) in concentrations of *Legionella* spp. relative to source water. In a few cases, source waters had higher levels than did heated waters. Infectious *Legionella* spp. were found in 7 of 11 test waters and 5 of 11 control source waters.

Subsequently, a more detailed study of *Legionella* spp. in the environs of coal-fired power plants was undertaken to determine the distribution, abundance, infectivity, and aerosolization of *Legionella* spp. in power plant cooling systems (Tyndall 1983; Christensen et al. 1983; Tyndall et al. 1985). This study found that positive air samples did not occur often at locations that were not next to cleaning operations, which suggests that aerosolized *Legionella* spp. associated with downtime procedures have minimal impact beyond these locations. Even within plant boundaries, detectable airborne *Legionella* spp. appear to be confined to very limited areas. In these areas, however, the more contact individuals have with the most concentrated *Legionella* spp. populations, particularly if they become aerosolized (as they do in some downtime operations), the more likely it is that workers are exposed.

There is new evidence that suggests that *Legionella*-like amoebal pathogens (LLAPs) may be an unrecognized significant cause of respiratory disease (Berk et al. 2006). In this study, the occurrence of infected amoebae in water, biofilm, and sediment samples from 40 cooling towers (non-nuclear sites) and 40 natural aquatic environments were compared. The natural samples were collected from rivers, creeks, lakes, and ponds from Tennessee, Kentucky, New Jersey, Florida, and Texas. The cooling tower samples were collected from industries, hospitals, municipal buildings, universities, and other public sites from Tennessee, Kentucky, and Texas. The infected amoebae were found in 22 cooling tower samples and 3 natural samples. According to this study, the probability of infected amoebae occurring in cooling towers is 16 times higher than in natural environments, which justifies the need for monitoring.

3.9.3.3 Microbiological Hazards to Plant Workers

Exposure to *Legionella* spp. from power plant operations is a potential problem for a subset of the workforce. Plant personnel most likely to come in contact with *Legionella* aerosols would be workers who dislodge biofilms, where *Legionella* are often concentrated, such as during the cleaning of condenser tubes and cooling towers. Since Legionellosis is a respiratory disease, workers engaged in such activities should be protected by wearing appropriate respiratory protection.

Because the route of infection for *N. fowleri* is nasal, workers exposed to aerosols of this pathogen also should be protected with respiratory protection. If workers are involved in underwater maintenance or other activities associated with thermally altered discharge waters known to harbor *N. fowleri*, they should wear appropriate gear to prevent entry of the amoebae into the nasal cavity.

In response to these various studies, workers at nuclear power plants are typically required to use respiratory protection when cleaning cooling towers and condensers. Also, for worker protection, one nuclear plant with high concentrations of *N. fowleri* in the circulating water successfully controlled the pathogen through chlorination before its yearly downtime operation (Tyndall 1983). It is anticipated that plant operators would continue to use proven industrial hygiene principles to minimize worker exposures to these organisms in mists of cooling towers (NRC 1996).

3.9.3.4 Microbiological Hazards to the Public

From the above studies, it is clear that heavily used bodies of freshwater merit special attention and possibly routine monitoring for pathogenic *Naegleria*. Since *Naegleria* concentrations in freshwater can be enhanced by thermal additions, nuclear power plants that utilize cooling lakes, canals, ponds, or small rivers may enhance the naturally occurring thermophilic organisms. The observed risk to swimmers from waters infected with *N. fowleri* is low but not zero (Hallenbeck and Brenniman 1989). Exposure to *Legionella* spp. from power plant operations would not generally impact the public because concentrated aerosols of the bacteria would not traverse plant boundaries. On the basis of the information available on microorganisms that may inhabit high-radiation, high-temperature environments (such as the spent fuel pool), the NRC concludes they have little potential for significantly increasing in number in the environment, and they would not have a deleterious effect on public health.

It is possible that the operations of the plants that use cooling ponds, lakes, canals, or small rivers may enhance the presence of thermophilic organisms (NRC 1996). There are currently 23 reactor sites that fit this category. Data for 14 sites from this category (Arkansas, Browns Ferry, Dresden, Farley, Fort Calhoun, Hatch, McGuire, Monticello, North Anna, Oconee, Peach Bottom, Quad Cities, H.B. Robinson, and Vermont Yankee) that have gone through or are going through license renewal were reviewed to predict the level of thermophilic microbiological organism enhancement at any given site. Health departments were contacted by many sites (Arkansas, Browns Ferry, Dresden, Farley, McGuire, Quad Cities, Oconee, and H.B. Robinson), and none of them had any concerns regarding the threat to the public from the thermophilic pathogens attributable to the plant operations. For some plants, such as Hatch, Quad Cities, Peach Bottom, and Monticello, NPDES permits had set limits on the maximum daily temperature for the discharge. At most of the sites where the public has access to the freshwater sources, temperatures could support survival of the thermophilic microorganisms in the summer but are generally below the range that is known to be conducive to their growth. For all 14 sites, the actual hazard to public health from enhancement of thermophilic microbiological organisms was not identified, documented, or substantiated.

3.9.4 Electromagnetic Fields

All nuclear power plants have power transmission systems associated with them. They consist of switching stations (or substations) located on the plant site and the transmission lines needed to connect the plant to the regional electrical distribution grid. Transmission lines operate at a frequency of 60 Hz (60 cycles per second), which is low compared with the frequencies of 55 to 890 MHz for television transmitters and 1000 MHz and greater for microwaves.

Electric fields are produced by voltage, and their strength increases with increases in voltage. An electric field is present as long as equipment is connected to the source of electric power. The unit of electric field strength is V/m or kV/m (1 kV/m = 1000 V/m). A magnetic field is produced from the flow of current through wires or electrical devices, and its strength increases as the current increases. The unit of magnetic field strength is gauss (G), milligauss (mG), or tesla (T). One tesla equals 10,000 G and 1 G equals 1000 mG. The electric field and magnetic field, collectively referred to as the electromagnetic field (EMF), are produced by operating transmission lines. Members of the public near the transmission lines may be exposed to the EMFs produced by transmission lines. The EMF varies in time as the current and voltage change, so that the frequency of the EMF is the same (e.g., 60 Hz for standard alternate current or AC). Electrical fields can be shielded by objects such as trees, buildings, and vehicles. Magnetic fields, however, penetrate most materials, but their strength decreases with increasing distance from the source.

Power lines associated with nuclear plants usually have voltages of 230 kV, 345 kV, 500 kV, or 765 kV (a voltage occurring primarily in the eastern United States). EMF strength at ground level varies greatly under these lines, generally being stronger for higher-voltage lines, a flat configuration of conductors, relatively flat terrain, terrain with no shielding obstructions (e.g., trees or shrubs), and a closer approach of the lines to the ground. At locations where the field strength is at a maximum, the measured values under 500-kV lines often average about 4 kV/m but sometimes exceed 6 kV/m. Maximum electric field strengths at ground level are 9 kV/m for 500-kV lines and 12 kV/m for 765-kV lines (NRC 1996).

Measured magnetic field strengths at the location of maximum values beneath 500-kV lines often average about 70 mG. During peak electricity use, when line current is high, the field strength may peak at 140 mG (about 1 percent or less of the time) (NRC 1996).

The EMFs resulting from 60-Hz power transmission lines fall under the category of nonionizing radiation. Much of the general population has been exposed to power line fields since near the turn of the 20th century. There was little concern about health effects from such exposures until the 1960s. A series of events during the 1960s and 1970s heightened public interest in the possibility of health effects from nonionizing radiation exposures and resulted in increased

scientific investigation in this area (NRC 1996). Then, in 1979, results of an epidemiological study suggested a correlation between proximity to high-current wiring configurations and incidence of childhood leukemia (Wertheimer and Leeper 1979). This report resulted in additional interest and scientific research; however, no consistent evidence linking harmful effects with 60-Hz exposures has been presented. Many studies have been conducted on the safety of the electric field, but no health effects have been associated with the magnitude of the electric fields that are associated with electrical power usage (Patty and Hill 2006). Most research on health effects has focused on magnetic fields.

3.9.5 Other Hazards

Nuclear power plants are industrial facilities having many of the typical occupational hazards found at any other electric power generation utility. Workplace hazards can be grouped into physical hazards (e.g., slips and trips, falls from height, and those related to transportation, temperature, humidity, and electricity), physical agents (noise, vibration, and ionizing radiation), chemical agents, biological agents, and psychosocial issues (work-related stress due to excessive working time and overnight shifts). The hazards from ionizing radiation, chemical agents, and biological hazards are discussed in Sections 3.9.1, 3.9.2, and 3.9.3, respectively. Power plant and maintenance workers could be working under potentially hazardous physical conditions (e.g., excessive heat, cold, and pressure), including electrical work, power line maintenance, and repair work.

Transmission lines are necessary to transfer energy from all types of electrical generating facilities, including nuclear power plants, to consumers. The potential exposure to workers and the public from the EMF is discussed in Section 3.9.4. The workers and general public at or around the nuclear power plants and along the transmission lines are exposed to the potential for acute electrical shock from transmission lines. This hazard is discussed in the following section.

3.9.5.1 Occupational Hazards

The Occupational Safety and Health Administration (OSHA) is responsible for developing and enforcing workplace safety regulations. OSHA was created by the Occupational Safety and Health Act of 1970 (29 USC 651 et seq.), which was enacted to safeguard the health of workers. Occupational hazards can be minimized when workers adhere to safety standards and use appropriate protective equipment; however, fatalities and injuries from accidents can still occur.

Table 3.9-21 lists the total number of fatal occupational injuries that occurred in 2005 in different industry sectors. For the utility sector, of which the nuclear industry is a part, 30 workers suffered fatal occupational injuries, 22 of which were from electric power

generation, transmission, and distribution. The rate of fatal injuries in the utility sector was less than the rate in the construction; transportation and warehousing; agriculture, forestry, fishing, and hunting; wholesale trade; and mining sectors. Table 3.9-22 lists the incidence rates of nonfatal occupational injuries and illnesses in different utilities for 2005. The incidence rate of nonfatal occupational injuries and illnesses is least for electric power generation, followed by electric power transmission control and distribution.

Table 3.9-23 lists the number and rate of fatal occupational injuries that occurred in 2005 for selected occupations. The fatality rate for installers and repairers of electrical power lines can be estimated at 0.032 percent (BLS 2005b). The occupational safety and health hazards issue is generic to all types of electrical generating stations, including nuclear power plants, and is of small significance if the workers adhere to safety standards and use protective equipment.

3.9.5.2 Shock Hazard

For purposes of evaluating the impacts of license renewal, the transmission lines of concern are those lines that currently connect the nuclear plant to the regional electrical distribution grid and that would remain energized only if the plant's operating license was renewed. The greatest hazard from a transmission line is direct electrical contact with the conductors. The electrical contact can occur without physical contact between a grounded object and the conductor (e.g., when arcing occurs across an air gap) (BPA 1998). The electric field created by a high-voltage line extends from the energized conductors to other conducting objects, such as the ground, vegetation, buildings, vehicles, and persons. Potential field effects can include induced currents, steady-state current shocks, spark-discharge shocks, and, in some cases, field perception and neurobehavioral responses.

The shock hazard issue is evaluated by referring to the National Electric Safety Code (NESC). The purpose of the NESC is the practical safeguarding of persons during the installation, operation, or maintenance of electric supply and communication lines and associated

Table 3.9-21. Number and Rate of Fatal Occupational Injuries by Industry Sector in 2005

Industry Sector	Number	Rate (per 100,000 employees)
Construction	1192	11.0
Transportation and warehousing	885	17.6
Agriculture, forestry, fishing, and hunting	715	32.6
Government	520	2.4
Professional and business services	482	3.5
Manufacturing	393	2.4
Retail trade	400	2.4
Leisure and hospitality	213	1.8
Wholesale trade	204	4.4
Mining	159	25.6
Other services	210	3.0
Educational and health services	150	0.8
Financial activities	99	1.0
Information	65	2.1
Utilities[(a)]	30	3.6
Electric utilities[(b)]	22	NA[(c)]
Power generation[(d)]	11	NA
Hydroelectric power generation	4	NA
Fossil fuel electric power generation	4	NA
Power transmission control and distribution[(e)]	9	NA
Natural gas distribution	4	NA
Water sewage and other system	3	NA
All sectors	5734	4.0

(a) The numbers of fatalities from transportation, falls, and exposure to harmful substances or the environment were 10, 7, and 11, respectively.
(b) The numbers of fatalities from transportation, falls, and exposure to harmful substances or the environment were 7, 5, and 9, respectively.
(c) NA = not available.
(d) The numbers of fatalities from transportation, falls, and exposure to harmful substances or the environment were 3, 3, and 5, respectively.
(e) The numbers of fatalities from transportation and exposure to harmful substances or the environment were 3 and 4, respectively.
Source: U.S. Bureau of Labor Statistics (BLS) 2005a,b

Table 3.9-22. Employment and Incidence Rate of Nonfatal Occupational Injuries and Illnesses in Different Utilities in 2005

Utility	Rate (per 100 Employees)	Employment (in 1000s)
Electric utilities	4.0	400.6
Power generation	3.3	240.1
Power transmission control and distribution	5.1	160.5
Natural gas distribution	5.9	107.0
Water sewage and other system	7.6	45.7
Overall	4.6	553.3

Source: BLS 2005c

Table 3.9-23. Number and Rate of Fatal Occupational Injuries for Selected Occupations in 2005

Occupation	Number	Rate per 100,000 Employed
Fishers and related fishing work	48	118.4
Aircraft pilots and flight engineers	81	66.9
Logging workers	80	92.9
Structural iron and steel workers	35	55.6
Refuse and recyclable material collectors	32	43.8
Farmers and ranchers	341	41.1
Electrical power-line installers and repairers	36	32.7
Drivers/sales workers and truck drivers	993	29.1
Miscellaneous agricultural workers	176	23.2
Construction laborers	339	22.7

Source: BLS 2005b

equipment. The NESC contains the basic provisions that are considered necessary for the safety of employees and the public under the specified conditions (IEEE 2007).

Primary shock currents are produced mainly through direct contact with conductors and have effects ranging from a mild tingling sensation to death by electrocution. Tower designs preclude direct public access to the conductors. Secondary shock currents are produced when humans make contact with (1) capacitively charged bodies, such as a vehicle parked near a

transmission line, or (2) magnetically linked metallic structures, such as fences near transmission lines. A person who contacts such an object could receive a shock and experience a painful sensation at the point of contact. The intensity of the shock depends on the EMF strength, the size of the object, and how well the object and the person are insulated from ground.

Design criteria that limit hazards from steady-state currents are based on the NESC, which requires that utility companies design transmission lines so that the short-circuit current to ground, produced from the largest anticipated vehicle or object, is limited to less than 5 milli Amps (mA) (IEEE 2007). No similar code exists for the limitation of the magnetic fields of transmission lines; however, because of concerns about the safety of magnetic fields, several States have created their own regulations (NRC 1996).

With respect to shock safety issues and license renewal, three points must be made. First, in the licensing process for the earlier licensed nuclear plants, the issue of electrical shock safety was not addressed. Second, some plants that received operating licenses with a stated transmission line voltage may have chosen to upgrade the line voltage for reasons of efficiency, possibly without reanalysis of induction effects. Third, since the initial NEPA review for those utilities that evaluated potential shock situations under the provision of the NESC, land use may have changed, resulting in the need for a reevaluation of this issue. Electrical shock potential is minimized for transmission lines that are operated in adherence with the NESC.

3.10 Environmental Justice

Under Executive Order 12898 (59 FR 7629), Federal agencies are responsible for identifying and addressing potential disproportionately high and adverse human health and environmental impacts on minority and low-income populations. In 2004, the Commission issued a *Policy Statement on the Treatment of Environmental Justice Matters in NRC Regulatory and Licensing Actions* (69 FR 52040), which states "The Commission is committed to the general goals set forth in E.O. 12898, and strives to meet those goals as part of its NEPA review process."

Executive Order 12898, Federal Actions to Address Environmental Justice in Minority Populations and Low-Income Populations

"Each federal agency, whenever practicable and appropriate, shall collect, maintain, and analyze information assessing and comparing environmental and human health risks borne by populations identified by race, national origin, or income. To the extent practical and appropriate, Federal agencies shall use this information to determine whether their programs, policies, and activities have disproportionately high and adverse human health or environmental effects on minority populations and low-income populations."

The Council of Environmental Quality (CEQ) provides the following information in *Environmental Justice: Guidance Under the National Environmental Policy Act* (CEQ 1997a):

- **Disproportionately High and Adverse Human Health Effects.** Adverse health effects are measured in risks and rates that could result in latent cancer fatalities, as well as other fatal or nonfatal adverse impacts on human health. Adverse health effects may include bodily impairment, infirmity, illness, or death. Disproportionately high and adverse human health effects occur when the risk or rate of exposure to an environmental hazard for a minority or low-income population is significant (as defined by CEQ) and appreciably exceeds the risk or exposure rate for the general population or for another appropriate comparison group (CEQ 1997b).

- **Disproportionately High and Adverse Environmental Effects.** A disproportionately high environmental impact that is significant (as defined by CEQ) refers to an impact or risk of an impact on the natural or physical environment in a low-income or minority community that appreciably exceeds the environmental impact on the larger community. Such effects may include ecological, cultural, human health, economic, or social impacts. An adverse environmental impact is an impact that is determined to be both harmful and significant (as defined by CEQ). In assessing cultural and aesthetic environmental impacts, impacts that uniquely affect geographically dislocated or dispersed minority or low-income populations or American Indian tribes are considered (CEQ 1997b).

The environmental justice analysis assesses the potential for disproportionately high and adverse human health or environmental effects on minority and low-income populations that could result from the continued operation of a nuclear power plant during the renewal term. In assessing the impacts, the following CEQ definitions of minority individuals and populations and low-income population were used:

- **Minority individuals.** Individuals who identify themselves as members of the following population groups: Hispanic or Latino, American Indian or Alaska Native, Asian, Black or African American, Native Hawaiian or Other Pacific Islander, or two or more races meaning individuals who identified themselves on a Census form as being a member of two or more races, for example, Hispanic and Asian.

- **Minority populations.** Minority populations are identified when (1) the minority population of an affected area exceeds 50 percent or (2) the minority population percentage of the affected area is meaningfully greater than the minority population percentage in the general population or other appropriate unit of geographic analysis. Minority populations may be communities of individuals living in close geographic proximity to one another, or they may be a geographically dispersed or transient set of individuals, such as migrant workers or American Indians, who, as a group, experience common conditions with regard to environmental exposure or environmental effects. The appropriate geographic unit of

analysis may be a political jurisdiction, county, region, or State, or some other similar unit that is chosen so as not to artificially dilute or inflate the affected minority population.

- **Low-income population.** Low-income population is defined as individuals or families living below the poverty level as defined by the U.S. Census Bureau's Current Population Reports, Series P-60 on Income and Poverty (USCB 2007). Low-income populations may be communities of individuals living in close geographic proximity to one another, or they may be a set of individuals, such as migrant workers, who, as a group, experience common conditions.

Consistent with the definition used in the impact analysis for public and occupational health and safety, affected populations are defined as minority and low-income populations who reside within a 50-mi (80-km) radius of a nuclear plant. Data on low-income and minority individuals are usually collected and analyzed at the census tract level or census block group level.[(a)]

The presence of minority and low-income individuals located within 50 mi (80 km) of each nuclear power plant site vary considerably depending on the proximity of larger communities to power plant sites, the location of Native American Tribal lands, historical population trends in the region around each site, and the nature of regional economic activity. Typically, plant sites in rural areas in the southern and southwestern United States are more likely to have larger minority populations. Examples are the Browns Ferry, Brunswick, Catawba, Farley, North Anna, H.B. Robinson, Summer, and Surry plants. Sites closer to metropolitan areas may have both larger minority populations and larger low-income populations. These include the Dresden, Ginna, Indian Point, and Pilgrim plants.

3.10.1 Subsistence Consumption of Fish and Wildlife

Section 4-4 of Executive Order 12898 directs Federal agencies, whenever practical and appropriate, to (a) collect and analyze information on the consumption patterns of populations who rely principally on fish and/or wildlife for subsistence and (b) communicate the risks of these consumption patterns to the public. Consideration is given to whether there are any ways in which minority or low-income populations could be disproportionately affected by means of examining impacts on American Indian, Hispanic, and other traditional-lifestyle, special-pathway receptors. Special pathways take into account the levels of contamination in native vegetation,

(a) A census block group is a combination of census blocks, which are statistical subdivisions of a census tract. A census block is the smallest geographic entity for which the U.S. Census Bureau (USCB) collects and tabulates decennial census information. A census tract is a small, relatively permanent statistical subdivision of counties delineated by local committees of census data users in accordance with USCB guidelines for the purpose of collecting and presenting decennial census data. Census block groups are subsets of census tracts (USCB 2005).

crops, soils and sediments, surface water, fish, and game animals on or near power plant sites in order to assess the risk of radiological exposure through subsistence consumption of fish, native vegetation, surface water, sediment, and local produce; the absorption of contaminants in sediments through the skin; and the inhalation of airborne particulate matter. The identification of special-pathway receptors can be important in an environmental justice analysis because consumption patterns may reflect the traditional or cultural practices of minority and low-income populations in the area.

Many nuclear plants have a comprehensive radiological environmental monitoring program to assess the impact of site operations on the environment (see Section 3.9.1). Samples are collected from the aquatic and terrestrial pathways applicable to the site. Aquatic pathways generally include fish, surface water, and sediment, while terrestrial pathways include airborne particulates, radioiodine, milk, food products, crops, and direct radiation. The concentrations of contaminants that are found in native vegetation, crops, soils, sediment, surface water, fish, and game animals in areas surrounding nuclear power plants are usually quite low (at or near the threshold of detection) and seldom above background levels. Consequently, no disproportionately high and adverse human health impacts have been implicated in special-pathway receptor populations in the regions around most nuclear power plants as a result of subsistence consumption of fish and wildlife.

3.11 Waste Management and Pollution Prevention

As part of their normal operations and as a result of equipment repairs and replacements due to normal maintenance activities, nuclear power plants routinely generate both radioactive and nonradioactive wastes. Nonradioactive wastes include hazardous and nonhazardous wastes. There is also a class of waste, called mixed waste, that is both radioactive and hazardous. The systems used to manage (i.e., treat, store, and dispose of) these wastes are described in Sections 3.1.4 and 3.1.5. The basic characteristics and current disposition paths for these waste streams are discussed in Section 3.11.1 for radioactive waste, 3.11.2 for hazardous waste, 3.11.3 for mixed waste, and 3.11.4 for nonradioactive nonhazardous waste. Waste minimization and pollution prevention measures commonly employed at nuclear power plants are reviewed in Section 3.11.5.

3.11.1 Radioactive Waste

There are basically two types of radioactive waste generated at nuclear power plants: (1) low-level waste (LLW) and (2) spent nuclear fuel. These two waste types are discussed in Sections 3.11.1.1 and 3.11.1.2, respectively.

3.11.1.1 Low-Level Radioactive Waste

Radioactive Wastes Associated with Commercial Nuclear Power Plants

Low-Level Waste: Radioactive material that (a) is not high-level radioactive waste, spent nuclear fuel, or by-product material (as defined in Section 11e(2) of the Atomic Energy Act of 1954 [42 USC 2014(e)(2)]) and (b) is classified by the NRC, consistent with existing law, as low-level radioactive waste (as defined in the Low-Level Radioactive Waste Policy Act, as amended, Public Law 99-240).

Spent Nuclear Fuel: Fuel that has been withdrawn from a nuclear reactor following irradiation, the constituent elements of which have not been separated by reprocessing (as included in the Nuclear Waste Policy Act of 1982, as amended, Public Law 97-425).

The NRC's definition of LLW is included in 10 CFR 61.55. Depending on the types and concentrations of radionuclides in the waste, the NRC classifies LLW as belonging to Class A, Class B, Class C, or greater-than-Class C. Class A wastes generally contain short-lived radionuclides at relatively low concentrations, whereas the half-lives and concentrations of radionuclides in the Class B and C wastes are progressively higher. In addition, Class B wastes must meet more rigorous requirements with regard to their form to ensure stability after disposal (e.g., by adding chemical stabilizing agents such as cement to the waste or placing the waste in a disposal container or structure that provides stability after disposal). Class C wastes must not only meet the more rigorous requirements above but also require the implementation of additional measures at the disposal facility to protect against inadvertent intrusion (e.g., by increasing the thickness and hardness of the cover over the waste disposal cell). Wastes containing radionuclides at concentrations that are higher than what is allowed for Class C wastes are classified as greater-than-Class C. Disposal of greater-than-Class C waste is the responsibility of the U.S. Department of Energy (DOE). DOE is currently preparing an EIS to evaluate the various alternatives for disposing of these wastes (DOE 2007).

LLW generated at nuclear power plants generally consists of air filters, cleaning rags, protective tape, paper and plastic coverings, discarded contaminated clothing, tools, equipment parts, and solid laboratory wastes (all these are collectively known as dry active waste) and wet wastes that result during the processing and recycling of contaminated liquids at the plants. Wet wastes generally consist of evaporator bottoms, spent demineralizer or ion exchange resins, and spent filter material from the equipment drain, floor drain, and water cleanup systems. The wet wastes are generally solidified, dried, or dewatered to make them acceptable at a disposal site. Some plants perform these operations onsite, while others ship their waste to a third-party vendor offsite for processing before it is sent to a disposal facility. The transportation and disposal of solid radioactive wastes are performed in accordance with the applicable requirements of 10 CFR Part 71 and 10 CFR Part 61, respectively.

LLW shipments from nuclear power plants to disposal facilities or waste processing centers and from waste processing centers to disposal facilities are generally made by trucks. Wastes are

segregated and packaged by class. For load leveling purposes, the wastes may be stored onsite at the plant temporarily before shipment offsite. Construction and operation of any LLW storage areas and any activities related to storage and processing of LLW onsite, including the preparation of waste for shipment and loading on vehicles before shipment, are carried out in accordance with the licensing requirements imposed by the NRC. All such operations are accounted for when the applicants prepare their annual radioactive effluent release reports to demonstrate compliance with the applicable Federal standards and requirements. The primary standards applicable to all the power plants are contained in 10 CFR Part 20, 40 CFR Part 190, and Appendix I to 10 CFR Part 50.

There are currently three operating disposal facilities in the United States that are licensed to accept commercial-origin LLW. They are located in Barnwell, South Carolina; Richland, Washington; and Clive, Utah. The facility in Utah, operated by EnergySolutions, is licensed to accept only Class A LLW, whereas the other two facilities can accept Class A, B, and C wastes (GAO 2004). In 2001, the South Carolina legislature imposed restrictions on the Barnwell facility that state that after June 2008, the facility can accept waste from generators in only three States: South Carolina, New Jersey, and Connecticut. The Richland facility accepts LLW from only 11 States: Washington, Alaska, Hawaii, Idaho, Montana, Oregon, Utah, Wyoming, Colorado, Nevada, and New Mexico. It is expected to close in 2056. The EnergySolutions facility in Utah accepts only Class A waste, but it can come from any State. This facility currently does not have a projected closing date.

The Low Level Radioactive Waste Policy Act (Public Law 96-573) was enacted in 1980. This act made each State responsible for providing for the disposal of the LLW generated within the State, either by itself or in cooperation with other States, with the exception of waste produced by DOE and the nuclear propulsion component of the Department of the Navy. The aims of the Low Level Radioactive Waste Policy Act were to provide more LLW disposal capacity on a regional basis and to more equitably distribute responsibility for the management of LLW among the States. As an incentive for States to manage waste on a regional basis, Congress consented to the formation of interstate agreements known as compacts, and it granted compact member States the authority to exclude LLW from States that are members of other compacts or unaffiliated with a compact.

In January 1986, Congress passed the Low-Level Radioactive Waste Policy Amendments Act (Public Law 99-240). This act extended the original January 1, 1986, deadline for developing new disposal facilities by 7 years to January 1, 1993. It also made the Federal government responsible for disposing of commercial-origin greater-than-Class C waste.

Figure 3.11-1 shows the compact arrangements as agreed to by the States. It also shows the location of the three active disposal facilities in South Carolina, Washington, and Utah. As of the writing of this GEIS revision, no new disposal facilities had been developed as a result of

either act. Two of the existing disposal facilities (Barnwell and Richland) were licensed before 1980. The EnergySolutions facility was developed by a private entity outside of these mandates. The Richland facility is the designated disposal site for the States in the Northwest and Rocky Mountain compacts. The Barnwell facility is the designated disposal site for the Atlantic compact. The EnergySolutions facility is not affiliated with any compacts.

Annual quantities of LLW generated at the nuclear power plants vary from year to year depending on the number of maintenance activities undertaken and the number of unusual occurrences taking place in that year. However, on average, the volume and radioactivity of LLW generated at a PWR are approximately 10,600 ft^3 (300 m^3) and 1000 Ci (3.7×10^{13} Bq) per year, respectively (Table 6.6 in NRC 1996). The annual volume and activity of LLW generated at a BWR are approximately twice the values indicated for a PWR. The total volume and activity of LLW generated at all the LWRs in the United States are approximately 706,000 ft^3 (20,000 m^3) and 60,000 Ci (2.2×10^{15} Bq), respectively (Table 6.6 in NRC 1996). Approximately 95 percent of this waste is Class A (NEI 2007b). Table 3.11-1 shows the volume and activity of LLW shipped offsite per operating reactor unit from 10 power plant sites in 2006. For example, there are two operating units at the Comanche Peak site, and the volume and activity of LLW shipped from the Comanche Peak site in 2006 were 5720 ft^3 (162 m^3) and 178 Ci (6.59×10^{12} Bq) per unit, with the total volume and activity shipped from the site being twice these values, namely 11,400 ft^3 (324 m^3) and 374 Ci (1.38×10^{13} Bq), respectively. The numbers in Table 3.11-1 were obtained from the annual radioactive effluent release reports issued by each plant for 2006.

Almost all of the LLW generated at the reactor sites is shipped offsite, either directly to a disposal facility or to a processing center for volume reduction or another type of treatment before being sent to a disposal site. The number of shipments leaving each reactor site vary but generally range from a few to about 100 per year. 10 CFR 20, Subpart K, discusses the various means by which the licensees may dispose of their waste. In addition to transferring it to an authorized disposal or treatment facility as described above, licensees may also (1) let the waste decay to acceptable levels in storage (this is not practical for most power reactor LLWs and is not practiced), (2) release it in effluents within the limits set in 10 CFR 20.1301 (certain liquid and gaseous wastes are released when this method is used), (3) obtain special approval from the NRC or an Agreement State pursuant to 10 CFR 20.2002,[(a)] (4) release it into

(a) Some licensees have used this method to dispose of low-activity wastes onsite subject to certain limitations. For example, owners of the Vermont Yankee Nuclear Power Station have disposed of certain quantities of soil, sewage sludge, and cooling tower silt onsite by using this method, with the limitations that (a) the dose received by an MEI not exceed 1 mrem (0.01 mSv) in any year while the licensee maintains control of the site, and (b) after the licensee gives up control of the disposal area, an intruder not receive a whole body dose exceeding 5 mrem in any one year.

Table 3.11-1. Solid Low-Level Radioactive Waste Shipped Offsite per Reactor from 10 Power Plant Sites in 2006[(a)]

Plant	Volume (m^3)	Activity (Ci)	Number of Shipments	Number of Reactors
PWRs				
Comanche Peak	162	187	6.5	2 (Units 1 and 2)
D.C. Cook	97.2	60	32	2 (Units 1 and 2)
Indian Point	501	316	16.3	3 (Units 1, 2, and 3)[(b)]
H.B. Robinson 2	145	173	6	1 (Unit 2)
San Onofre	3210	150	116.3	3 (Units 1, 2, and 3)[(b)]
Surry	391	223	11	2 (Units 1 and 2)
BWRs				
Hatch	148	445	55	2 (Units 1 and 2)
Vermont Yankee	61	18,800[(c)]	104	1
Limerick	55	291	27	2 (Units 1 and 2)
Columbia	368	1570	28	1

(a) The numbers in the table were obtained from each plant's 2006 Annual Radioactive Effluent Release Report.
(b) Unit 1 is shut down at both Indian Point and San Onofre.
(c) Includes shipment of irradiated components.

sanitary sewage as discussed in 10 CFR 20.2003 (this is not practical for most power reactor LLWs and is not practiced), (5) incinerate it as provided in 10 CFR 20.2004 (certain quantities of low-activity used oils are incinerated at a few sites to provide heat and dispose of the oils), or (6) dispose of wastes containing low levels of tritium and carbon-14 in accordance with the criteria discussed in 10 CFR 20.2005.

3.11.1.2 Spent Nuclear Fuel

Spent nuclear fuel is fuel that has been withdrawn from a nuclear reactor following irradiation, the constituent elements of which have not been separated. When spent fuel is removed from a reactor, it is stored in racks placed in a pool (called the spent fuel pool) to isolate it from the environment and to allow the fuel rods to cool. Licensing plans contemplate disposal of spent fuel in a deep geological repository. Siting and developing a permanent repository is required by the Nuclear Waste Policy Act of 1982. Delays in siting a permanent repository, coupled with rapidly filling spent fuel pools at some

plants, have led utilities to seek means of continued onsite storage. These include (1) expanded pool storage, (2) aboveground dry storage, (3) longer fuel burnup to reduce the amount of spent fuel requiring interim storage, and (4) shipment of spent fuel to other plants. Any modification to the spent fuel storage configuration at a nuclear power plant is subject to NRC review and approval. Each review consists of a safety review and the preparation of an EAan environmental review. As part of the environmental review for such a modification, the NRC generally prepares an environmental assessment (EA).

Expanded pool storage options include (1) enlarging the capacity of spent fuel racks, (2) adding racks to existing pool arrays (“dense-racking”), (3) reconfiguring spent fuel with neutron-absorbing racks, and (4) employing double-tiered storage (installing a second tier of racks above those on the pool floor).

Aboveground dry storage involves moving the spent fuel assemblies, which have been stored in the spent fuel pool for a certain period of time, to aboveground, shielded enclosures that are air cooled (also known as dry storage). The fuel is stored in the spent fuel pool to cool, typically for several years, before it may be moved to a dry cask storage facility. In the late 1970s and early 1980s, the need for alternative storage began to grow when pools at many nuclear reactors began to fill up with stored spent fuel. Utilities began looking at options such as dry cask storage for increasing their storage capacity for spent fuel.

Dry cask storage allows spent fuel to be surrounded by inert gas inside a container called a cask. The casks are typically steel cylinders that are either welded or bolted closed. The steel cylinder provides a leak-proof containment for the spent fuel. Each cylinder is surrounded by additional steel, concrete, or other material to provide radiation shielding to workers and members of the public. Some of the cask designs can be used for both storage and transportation.

There are various dry storage cask system designs. With some designs, the steel cylinders containing the fuel are placed vertically in a concrete vault; other designs orient the cylinders horizontally. The concrete vaults provide the radiation shielding. Other cask designs orient the steel cylinder vertically on a concrete pad at a dry cask storage site and use both metal and concrete outer cylinders for radiation shielding. Figure 3.11-2 shows two of the typical dry cask storage designs. The location of the dry casks is in a facility known as an Independent Spent Fuel Storage Installation or ISFSI. This is a complex designed and constructed for the interim storage of spent nuclear fuel, solid reactor-related greater than class C waste, and other radioactive materials associated with spent nuclear fuel and reactor-related greater than class C waste storage. The ISFSI is generally located within the same site where the nuclear fuel is used. They are licensed by the NRC under either a general license or a site-specific license (see 10 CFR Part 72). Figure 3.11-3 shows the locations of currently licensed ISFSIs.

Longer-burnup fuel is fuel from which more energy can be obtained before it is taken out of the reactor and declared spent. As a result of using this fuel, less spent fuel is generated for the same amount of energy produced in a reactor.

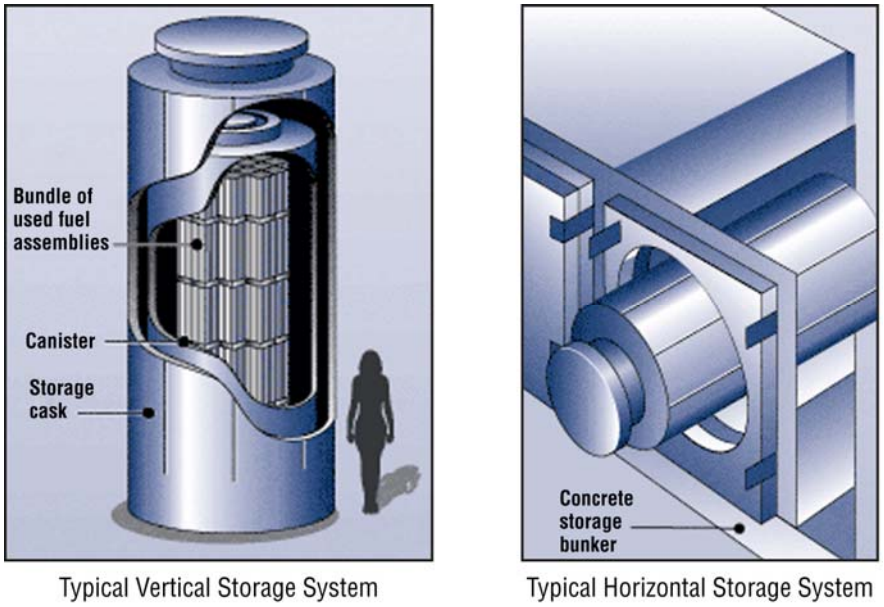

Figure 3.11-1. Typical Dry Cask Storage Systems (Source: NRC 2007i)

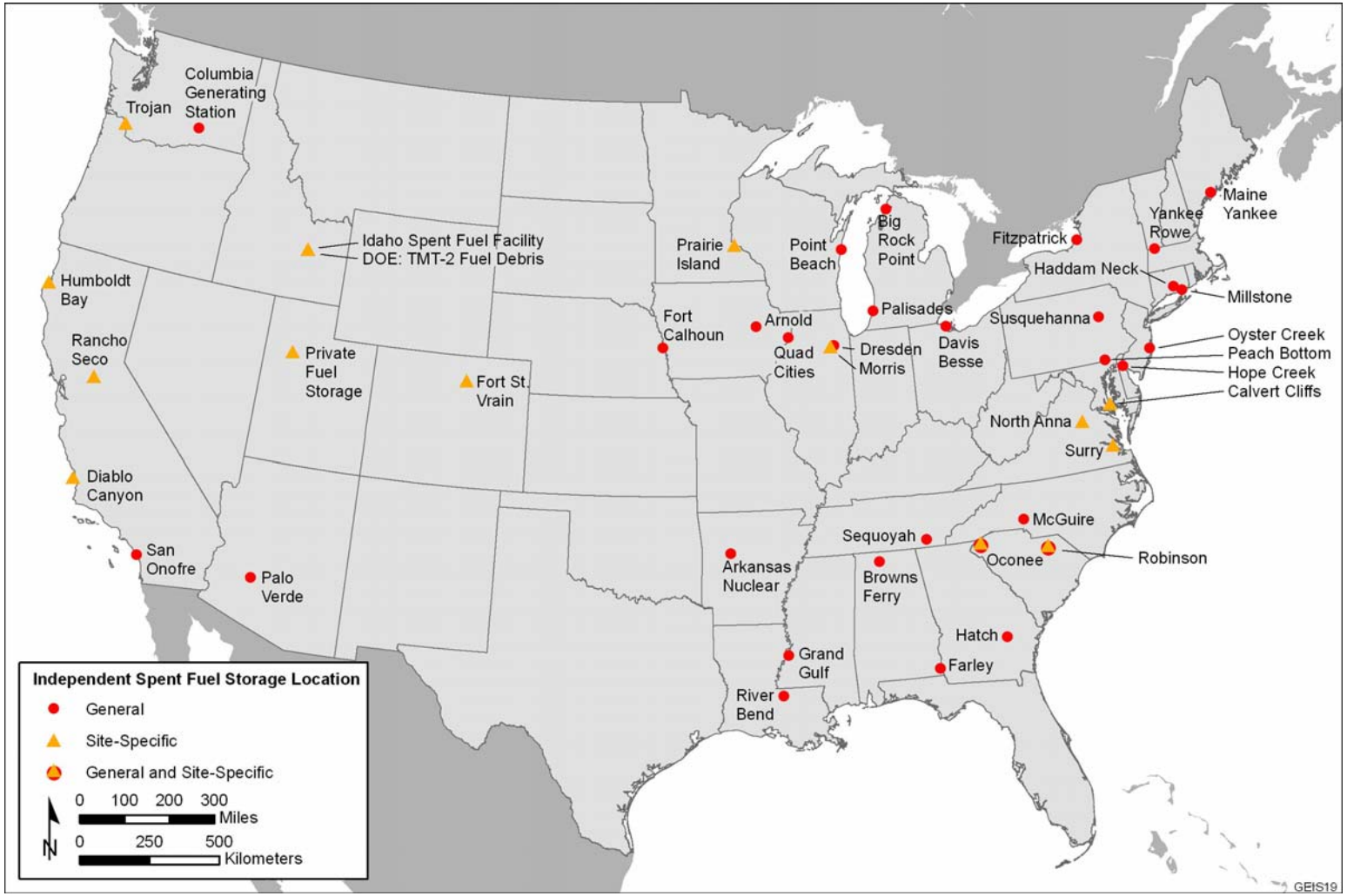

Figure 3.11-2. Locations of Independent Spent Fuel Storage Installations Licensed by the NRC (Source: NRC 2007j)

Longer-burnup fuel is fuel from which more energy can be obtained before it is taken out of the reactor and declared spent. As a result of using this fuel, less spent fuel is generated for the same amount of energy produced in a reactor.

Although plants running out of storage space may enter into agreements with others that have space for sale or lease, this approach is widely viewed as an interim measure, practical only for utilities that own more than one nuclear plant (NRC 1996).

Other Wastes Associated with Commercial Nuclear Power Plants

Hazardous Waste: A solid waste or combination of solid wastes that, because of its quantity, concentration, or physical, chemical, or infectious characteristics, may (1) cause or significantly contribute to an increase in mortality or an increase in serious irreversible or incapacitating reversible illness or (2) pose a substantial present or potential hazard to human health or the environment when improperly treated, stored, transported, disposed of, or otherwise managed (as defined in the Resource Conservation and Recovery Act, as amended, Public Law 94-580).

Mixed Waste: Waste that is both hazardous and radioactive.

Nonradioactive Nonhazardous Waste: Waste that is neither radioactive nor hazardous.

3.11.2 Hazardous Waste

Hazardous waste is defined by the EPA in 40 CFR Part 261, “Identification and Listing of Hazardous Waste,” as solid waste that (1) is listed by the EPA as being hazardous; (2) exhibits one of the characteristics of ignitability, corrosivity, reactivity, or toxicity; or (3) is not excluded by the EPA from regulation as being hazardous. All aspects of hazardous waste generation, treatment, transportation, and disposal are strictly regulated by the EPA or by the States under agreement with the EPA per the regulations promulgated under RCRA (PL 94-580).

The types of hazardous waste that nuclear power plants generate include waste paints, lab packs, solvents, and lead batteries. The quantities of these wastes generated at individual plants are highly variable but, generally, relatively small when compared with the quantities at most other industrial facilities that generate hazardous waste. Most nuclear power plants accumulate their hazardous waste onsite as authorized under RCRA and transport it to a treatment facility where it undergoes treatment. The remaining residues are sent to a permanent disposal facility. There are quite a few RCRA-permitted treatment and disposal facilities throughout the United States that are used by the owners of nuclear power plants.

There is a class of hazardous waste, called universal waste, that the EPA has authorized to be handled differently from the other kinds of hazardous waste. The EPA’s universal waste regulations streamline hazardous waste management standards for Federally designated universal wastes, which include batteries, pesticides, mercury-containing equipment, and

lamps. The regulations govern the collection and management of these widely generated wastes, thus facilitating environmentally sound collection and proper recycling or treatment.

The Federal universal waste regulations are set forth in 40 CFR Part 273. States can modify the universal waste rule and add additional universal waste(s) in individual State regulations. Nuclear power plants follow the regulations set forth by the EPA or by their State agencies, as applicable, to manage their universal waste.

3.11.3 Mixed Waste

Wastes that are both radioactive and hazardous are called mixed waste. They are subject to dual regulation: by the EPA or an authorized State for their hazardous component, and by the NRC or an agreement State for their radioactivity. The types of mixed wastes generated at nuclear power plants include organics (e.g., liquid scintillation fluids, waste oils, halogenated organics), metals (e.g., lead, mercury, chromium, and cadmium), solvents, paints, and cutting fluids. The quantity of mixed waste generated varies considerably from plant to plant (NRC 1996). Overall, the quantities generated during operations are generally relatively small, but because of the added complexity of dual regulation, it is more problematic for plant owners to manage and dispose of mixed wastes than the other types of wastes. Similar to hazardous waste, mixed waste is generally accumulated onsite in designated areas as authorized under RCRA, then shipped offsite for treatment as appropriate and for disposal. The only disposal facility that is authorized to receive mixed LLW for disposal at present is the EnergySolutions facility discussed under Section 3.11.1.1 on LLW.

Occupational exposures and any releases from onsite treatment of these and any other types of wastes are considered in evaluating compliance with the applicable Federal standards and regulations, for example, 10 CFR Part 20, 40 CFR Part 190, and Appendix I to 10 CFR Part 50.

3.11.4 Nonradioactive, Nonhazardous Waste

Like any other industrial facility, nuclear power plants generate wastes that are not contaminated with either radionuclides or hazardous chemicals. These wastes include trash, paper, wood, and sewage. Solid wastes, defined as nonhazardous by 40 CFR Part 261, are collected and disposed of in a local landfill. Sanitary wastes defined as nonhazardous by 40 CFR Part 261 are generally treated at an onsite sewage treatment plant, and the residues are sent to local landfills. Some power plants collect their sanitary waste in septic tanks and empty the tanks periodically, shipping the pumped sewage to a local sanitary waste treatment plant. The uncontaminated wastes and sewage are tested for radionuclides before being sent offsite to make sure that there is no inadvertent contamination. Any offsite releases from the onsite sewage treatment plants are conducted under NPDES permits. Most plants also collect and test the stormwater runoff from their sites before discharging it offsite.

3.11.5 Pollution Prevention and Waste Minimization

Waste minimization and pollution prevention are important elements of operations at all nuclear power plants. The licensees are required to consider pollution prevention measures as dictated by the Pollution Prevention Act (Public Law 101-508) and RCRA (PL 94-580).

In addition, licensees have waste minimization programs in place that are aimed at minimizing the quantities of waste sent offsite for treatment or disposal. Waste minimization techniques employed by the licensees may include (1) source reduction, which includes (a) changes in input materials (e.g., using materials that are not hazardous or are less hazardous), (b) changes in technology, and (c) changes in operating practices; and (2) recycling of materials either onsite or offsite. For example, the licensees tend to reuse lead shielding components onsite until they have no further use for them. The establishment of a waste minimization program is also a requirement for managing hazardous wastes under RCRA.

3.12 References

10 CFR Part 20. *Code of Federal Regulations*, Title 10, *Energy*, Part 20, “Standards for Protection Against Radiation.”

10 CFR Part 50. *Code of Federal Regulations*, Title 10, *Energy*, Part 50, “Domestic Licensing of Production and Utilization Facilities.”

10 CFR Part 51. *Code of Federal Regulations*, Title 10, *Energy*, Part 51, “Environmental Protection Regulations for Domestic Licensing and Related Regulatory Functions.”

10 CFR Part 61. *Code of Federal Regulations*, Title 10, *Energy*, Part 61, “Licensing Requirements for Land Disposal of Radioactive Waste.”

10 CFR Part 71. *Code of Federal Regulations*, Title 10, *Energy*, Part 71, “Packaging and Transportation of Radioactive Material.”

10 CFR Part 72. *Code of Federal Regulations*, Title 10, *Energy*, Part 72, “Licensing Requirements for the Independent Storage of Spent Nuclear Fuel, High-Level Radioactive Waste, and Reactor-Related Greater than Class C Waste.”

24 CFR Part 51. *Code of Federal Regulations*, Title 24, *Housing and Urban Development*, Part 51, “Environmental Criteria and Standards.”

36 CFR Part 60. *Code of Federal Regulations*, Title 36, *Parks, Forests, and Public Property*, Part 60, "National Register of Historic Places."

36 CFR Part 800. *Code of Federal Regulations*, Title 36, *Parks, Forests, and Public Property*, Part 800, "Protection of Historic Properties."

40 CFR Part 50. *Code of Federal Regulations*, Title 40, *Protection of the Environm*ent, Part 50, "National Primary and Secondary Ambient Air Quality Standards."

40 CFR Part 61. *Code of Federal Regulations*, Title 40, *Protection of Environment*, Part 61, "National Emission Standards for Hazardous Air Pollutants."

40 CFR Part 125. *Code of Federal Regulations*, Title 40, *Protection of the Environment*, Part 125, "Criteria and Standards for the National Pollutant Discharge Elimination System."

40 CFR Part 190. *Code of Federal Regulations*, Title 40, *Protection of Environment*, Part 190, "Environmental Radiation Protection Standards for Nuclear Power Operations."

40 CFR Part 261. *Code of Federal Regulations*, Title 40, *Protection of Environment*, Part 261, "Identification and Listing of Hazardous Waste."

40 CFR Part 273. *Code of Federal Regulations*, Title 40, *Protection of Environment*, Part 273, "Standards for Universal Waste Management."

49 CFR Part 171. *Code of Federal Regulations*, Title 49, *Transportation*, Part 171, "General Information, Regulations, and Definitions."

49 CFR Part 172. *Code of Federal Regulations*, Title 49, *Transportation*, Part 172, "Hazardous Materials Table, Special Provisions, Hazardous Materials Communications, Energy Response Information, and Training Requirements."

49 CFR Part 173. *Code of Federal Regulations*, Title 49, *Transportation*, Part 173, "Shippers General Requirements for Shipments and Packagings."

49 CFR Part 174. *Code of Federal Regulations*, Title 49, *Transportation*, Part 174, "Carriage by Rail."

49 CFR Part 175. *Code of Federal Regulations*, Title 49, *Transportation*, Part 175, "Carriage by Aircraft."

49 CFR Part 176. *Code of Federal Regulations*, Title 49, *Transportation*, Part 176, "Carriage by Vessel."

49 CFR Part 177. *Code of Federal Regulations*, Title 49, *Transportation*, Part 177, "Carriage by Public Highway."

Advisory Committee on the Biological Effects of Ionizing Radiation (BEIR). 2006. *Health Risks from Exposure to Low Levels of Ionizing Radiation*. BEIR-VII, National Research Council, National Academy of Sciences, Washington, D.C.

American Cancer Society (ACS). 2001. *Cancer Facts and Figures*. Available URL: http://www.cancer.org/statistics/cff98/enviromental.html (Accessed October 4, 2007).

Armantrout, N.B. (compiler). 1998. *Glossary of Aquatic Habitat Inventory Terminology*. American Fisheries Society, Bethesda, Maryland.

Armour, C.L. 1991. *Guidance for Evaluating and Recommending Temperature Regimes to Protect Fish.* Biological Report 90(22). U.S. Fish and Wildlife Service, Washington, D.C. (December).

Atomic Energy Act of 1954, as amended. 42 USC 2011 et seq.

Batty, R.S., and J.H.S. Blaxter. 1992. "The Effect of Temperature on the Burst Swimming Performance of Fish Larvae." *Journal of Experimental Biology* 170:187–201.

Beeton, A.M. 2002. "Large Freshwater Lakes: Present State, Trends, and Future." *Environmental Conservation* 29(1):21-38.

Beitinger, T.L., W.A. Bennett, and R.W. McCauley. 2000. "Temperature Tolerances of North American Freshwater Fishes Exposed to Dynamic Changes in Temperature." *Environmental Biology of Fishes* 58:237–275.

Berk, S.G., J.H. Gunderson, A.L. Newsome, A.L. Farone, B.J. Hayes, K.S. Redding, N. Uddin, E.L. Williams, R.A. Johnson, M. Farsian, A. Reid, J. Skimmyhorn, and M.B. Farone. 2006. "Occurrence of Infected Amoebae in Cooling Towers Compared with Natural Aquatic Environments: Implications for Emerging Pathogens." *Environmental Science and Technology* 40(23):7440–7444.

Boice Jr., J.D., M.T. Mumma, W.J. Blot, and C.W. Heath Jr. 2005. "Childhood Cancer Mortality in Relation to St. Lucie Nuclear Power Plant." *Journal of Radiological Protection* 25:229–240.

Bonneville Power Administration (BPA). 1998. *Living and Working Safely Around High-Voltage Power Lines*. DOE/BP-1821, U.S. Department of Energy. (January).

Bonneville Power Administration (BPA). 2000. *Transmission System Vegetation Management Program Final Environmental Impact Statement*. DOE/EIS-0285, U.S. Department of Energy, Portland, Oregon. (May).

Burrows, S., and D.A. Hagemeyer. 2006. *Occupational Radiation Exposure at Commercial Nuclear Power Reactors and Other Facilities 2005.* NUREG-0713, U.S. Nuclear Regulatory Commission. (December).

Centers for Disease Control and Prevention (CDC). 2005. *Legionellosis: Legionnaires' Disease (LD) and Pontiac Fever*. Atlanta, Georgia. Available URL: http://www.cdc.gov/ncidod/dbmd/diseaseinfo/legionellosis_g.htm (Accessed September 7, 2007).

Centers for Disease Control and Prevention (CDC). 2007. *Salmonellosis*. Atlanta, Georgia. Available URL: http://www.cdc.gov/ncidod/dbmd/diseaseinfo/salmonellosis_g.htm (Accessed September 10, 2007).

Christensen, S.W, J.A. Solomon, S.B. Gough, R.L. Tyndall, and C.B. Fliermans. 1983. *Legionnaire's Disease Bacterium in Power Plant Cooling Systems: Phase I Final Report*. EPRI/EA-3153, Electric Power Research Institute, Palo Alto, California.

Claireaux, G., C. Couturier, and A.-L. Groison. 2006. "Effect of Temperature on Maximum Swimming Speed and Cost of Transport in Juvenile European Sea Bass (*Dicentrarchus labrax*)." *Journal of Experimental Biology* 209:3420–3428.

Clean Air Act (CAA). 1970. 42 USC 7401 et seq.

Clean Water Act (CWA). 33 USC 1251 et seq.

Coastal Zone Management Act. 1972. 16 USC 1456.

Comprehensive Environmental Response, Compensation and Liabilities Act (CERCLA). 42 USC 9601 et seq (1980).

Council on Environmental Quality (CEQ). 1997a. *Environmental Justice: Guidance Under the National Environmental Policy Act*. Executive Office of the President, Washington, D.C.

Council on Environmental Quality (CEQ). 1997b. 40 CFR 1500–1508.

Cowardin, L., V. Carter, F. Golet, and E. LaRoe. 1979. *Classification of Wetlands and Deepwater Habitats of the United States*. FWS/OBS-79/31, Office of Biological Services, U.S. Fish and Wildlife Service, U.S. Department of the Interior.

Crooks, K.R., and M.E. Soule. 1999. "Mesopredator Release and Avifaunal Extinctions in a Fragmented System." *Nature* 400:563–566.

D'Amore, S.C. 1985. "Digital Analytical Method for Calculating Corona Noise on HVC Power Line, Carrier Communication Channels." *IEEE Transactions on Power Apparatus and Systems*, Vol. PAS-104 (5):1018–1024.

Deacon, J. 2003. *The Microbial World: Thermophilic Microorganisms*. The University of Edinburgh, Institute of Cell and Molecular Biology, Edinburgh, United Kingdom. Available URL: http://helios.bto.ed.ac.uk/bto/microbes/thermo.htm (Accessed September 7, 2007).

Dermott, R., and D. Kerec. 1997. "Changes to the Deepwater Benthos of Eastern Lake Erie since the Invasion of *Dreissena*: 1979–1993." *Canadian Journal of Fisheries and Aquatic Sciences* 54:922–930.

Edsall, T., and M. Charlton. 1997. *Nearshore waters of the Great Lakes*. Published by U.S. Environmental Protection Agency and Environment Canada. Available URL: http://www.on.ec.gc.ca/solec/nearshore-water/paper/part5.html.

Electric Power Research Institute (EPRI). 1982. *Transmission Line Reference Book: 345 kV and Above*. Second Edition, Palo Alto, California.

Ellingson, E.F. 1979. *Transformer Noise Abatement Tuned Using Tuned Sound Enclosure Panels*. Institute of Electrical and Electronics Engineers.

Endangered Species Act of 1973. 16 USC 1531–1544.

Evans, D.R., and J.E. Gates. 1997. "Cowbird Selection of Breeding Areas: The Role of Habitat and Bird Species Abundance." *Wilson Bulletin* 109:470–480.

Executive Order 11988. 1977. *Floodplain Management*. 42 FR 26951. (May 24).

Executive Order 11990. 1977. *Protection of Wetlands*. 42 FR 26961. (May 24).

Executive Order 12898. 1994. *Federal Actions to Address Environmental Justice in Minority Populations and Low-Income Populations*. 59 FR 7629. (February 16).

Federal Insecticide, Fungicide, and Rodenticide Act (FIFRA). 1996. 7 USC 135 et seq.

Federal Interagency Committee on Noise (FICN). 1992. *Federal Agency Review of Selected Airport Noise Analysis Issues*. Technical Report, Vol. 2. (August).

Florida Department of Health (FDOH). 2001. *Report Concerning Cancer Rate in Southeastern Florida*. Bureau of Environmental Epidemiology, Division of Environmental Health, Tallahassee, Fla. (July 17).

Frankel, A.D., M.D. Petersen, C.S. Mueller, K.M. Haller, R.L. Wheeler, E.V. Leyendecker, R.L. Wesson, S.C. Harmsen, C.H. Cramer, D.M. Perkins, and K.S. Rukstales. 2005. *Scientific Investigations Map 2883, Seismic-Hazard Maps for the Conterminous United States*. U.S. Geological Survey. Available URL: http://pubs. usgs.gov/sim/2005/2883/ (Accessed October 3, 2007).

Fremling, C., and B. Drazkowski. 2000. *Ecological, Institutional, and Economic History of the Upper Mississippi River.* Upper Mississippi Basin Stakeholders Network, Winona, Minnesota. Available URL: http://www.umbsn.org/news/documents/UMR_Ecological_History.htm (Accessed February 21, 2003).

Giusti, E.V., and E.L. Meyer. 1977. *Water Consumption by Nuclear Powerplants and Some Hydrological Implications*. Circular 745, U.S. Geological Survey, Washington, D.C.

Gould, J.M., E.J. Sternglass, J.D. Sherman, J. Brown, W. McDonnell, and J.J. Mangano. 2000. "Strontium-90 in Deciduous Teeth as a Factor in Early Childhood Cancer." *International Journal of Health Services* 30:519–539.

Gulf States Marine Fisheries Commission (GSMFC). 2005. *Corbicula fluminea (Muller, 1774)*. Ocean Springs, Mississippi. Available URL: http://nis.gsmfc.org/nis_factsheet.php?toc_id=128 (Accessed February 5, 2008).

Hall, C.A.S., R. Howarth, B. Moore, III, and C.J. Vörösmarty. 1978. "Environmental Impacts of Industrial Energy Systems in the Coastal Zone." *Annual Review of Energy* 3:395–475.

Hallenbeck, W.H., and G.R. Brenniman. 1989. "Risk of Fatal Amoebic Meningoencephalitis from Waterborne *Naegleria fowleri*." *Environmental Management* 13(2):227–232.

Harlow, J.H. 2003. *Electric Power Transformer Engineering*. Electric Power Engineering Series, Vol. 11, Harlow Engineering Associates, Mentone, Alabama.

Harrison, F.L. 1985. "Effect of Physiochemical Form on Copper Availability to Aquatic Organisms." Pages 469–484 in R.D. Cardwell et al., eds., *Seventh Symposium on Aquatic Toxicology and Hazard Assessment*. ASTM STP 854, American Society for Testing and Materials, Philadelphia, Pennsylvania.

Huntsville Times. 2007. "Hot Weather Forces Partial Shutdown of Alabama Nuclear Plant." Posted by Associated Press. (August 17). Available URL: http://blog.al.com/breaking/2007/08/hot_weather_forces_partial_shu.html (Accessed November 11, 2007).

Illinois Department of Public Health (IDPH). 2000. *Health and Hazardous Substances Registry Newsletter*. Division of Epidemiologic Studies, Springfield, Illinois. (January).

Illinois Department of Public Health (IDPH). 2006. *Pediatric Cancer Incidence and Mortality in the Vicinity of Nuclear Power Plants in Illinois*. Division of Epidemiologic Studies, Springfield, Illinois. (January).

Indian Point Energy Center (Indian Point). 2005. *Annual Radioactive Effluent Release Report*.

Institute of Electrical and Electronic Engineers, Inc. (IEEE). 2007. *National Electrical Safety Code*. C2-2007, New York, New York.

International Commission on Radiological Protection (ICRP). 1977. *Recommendations of the International Commission on Radiological Protection.* Publication 26. Pergamon Press, Oxford, U.K.

International Commission on Radiological Protection (ICRP). 1991. *1990 Recommendations of the International Commission on Radiological Protection*. ICRP Publication 60. Pergamon Press, Oxford, United Kingdom.

Iowa Department of Natural Resources (IDNR). Undated. *Zebra Mussel Dreissena polymorpha*. Des Moines, Iowa. Available URL: http://www.iowadnr.com/fish/news/exotics/zebra.html (Accessed February 5, 2008).

Jones, T.S., and R.I. McLean. 2005. *Environmental Radionuclide Concentrations in the Vicinity of the Calvert Cliffs Nuclear Power Plant and Peach Bottom Atomic Power Station: 2002–03*. PPRP-R-29, Maryland Department of Natural Resources, Maryland Power Plant Research Program, Annapolis, Maryland. (December). Available URL: http://esm.versar.com/PPRP/bibliography/PPRP_R_29/PPRP_R_29.pdf (Accessed November 28, 2007).

Kendall, P. 2007. *Bacterial Food-Borne Illness*. Fact Sheet No. 9.300. Cooperative Extension, Colorado State University, Fort Collins, Colorado. Available URL: http://www.ext.colostate.edu/pubs/foodnut/09300.html (Accessed September 7, 2007).

Lagler, K.F., J.E. Bardach, and R.R. Miller. 1962. *Ichthyology*. John Wiley & Sons, Inc., New York, New York.

Laist, D.L., and J.E. Reynolds, III. 2005. "Influence of Power Plants and Other Warm-Water Refuges on Florida Manatees." *Marine Mammal Science* 21(4):739–764.

Lane, J.A., C.B. Portt, and C.K. Minns. 1996. "Nursery Habitat Characteristics of Great Lake Fishes." *Canadian Manuscript Report of Fisheries and Aquatic Sciences* 2338.

Low-Level Radioactive Waste Policy Act (LLRWPA). 1980. 42 USC 2021 et seq.

Low-Level Radioactive Waste Policy Amendments Act (LLWPAA). 1985. 42 USC 2021b et seq.

Magnuson, J.J., L.B. Crowder, and P.A. Medvick. 1979. "Temperature as an Ecological Resource." *American Zoologist* 19(1):331–343. (abstract)

Magnuson-Stevens Fishery Conservation and Management Act (MSFCMA). 1976. 16 USC 1801–1884.

Mangano, J.J., J.M Gould, E.J. Sternglass, J.D. Sherman, and W. McDonnell. 2003. "An Unexpected Rise in Strontium-90 in U.S. Deciduous Teeth in the 1990s." *The Science of the Total Environment* 317(1-3):37–51. (December 30).

Manville, A.M. 2005. "Bird Strikes and Electrocutions at Power Lines, Communication Towers, and Wind Turbines: State of the Art and State of the Science – Next Steps Toward Mitigation." In *Bird Conservation Implementation in the Americas: Proceedings 3rd International Partners in Flight Conference 2002*, C.J. Ralph and T.D. Rich, Editors. USDA Forest Service General Technical Report PSW-GTR-191, Pacific Southwest Research Station, Albany, California.

Maricopa County Air Quality Department (MCAQD). 2006. *Periodic Emissions Inventory for PM_{10}, 2002, Maricopa County, Arizona, Nonattainment Area.* Available URL: http://www.maricopa.gov/aq/divisions/planning_analysis/docs/02PM-EI-revised.pdf. (Accessed November 25, 2008).

Marine Mammal Protection Act (MMPA). 1972. 16 USC 1361–1421h.

Maruvada, S. 2000. *Corona Performance of High-Voltage Transmission Lines*. Research Studies Press Ltd., Philadelphia, Pennsylvania.

McLean, R., W.A. Richkus, S.P. Schreiner, and D. Fluke. 2002. *Maryland Power Plant Cooling Water Intake Regulations and Their Application in Evaluation of Adverse Environmental Impact*. PPRP-R-127, Maryland Department of Natural Resources, Maryland Power Plant Research Program, Annapolis, Maryland. (March). Available URL: http://esm.versar.com/PPRP/316/PPRP-127.pdf (Accessed November 28, 2007).

Metz, W. (editor). 1983. *Population and Land Use Change in the Vicinity of Operating Nuclear Power Station – An Anthology.* Prepared for U.S. Nuclear Regulatory Commission, Office of Regulatory Research, Division of Health, Siting, and Waste Management, by Brookhaven National Laboratory, Upton, Long Island, New York. (April).

Morgan, D.E., M. Keser, J.T. Swenarton, and J.F. Foertch. 2003. "Population Dynamics of the Asiatic Clam, *Corbicula fluminea* (Müller) in the Lower Connecticut River: Establishing a Foothold in New England." *Journal of Shellfish Research* 22(1):193–203.

Morrow, J. V., and J.C. Fischenich. 2000. *Habitat Requirements for Freshwater Fishes.* EMRRP Technical Notes Collection, ERDC TN-EMRRPSR-06, U.S. Army Engineer Research and Development Center, Vicksburg, Mississippi. (May). Available URL: http://el.erdc.usace.army.mil/elpubs/pdf/sr06.pdf (Accessed November 12, 2007).

Murdy, E.O., R.S. Birdsong, and J.A. Musick. 1997. *Fishes of Chesapeake Bay*. Smithsonian Institution Press, Washington, D.C.

National Cancer Institute. 1990. *Cancer in Populations Living near Nuclear Facilities*. Bethesda, Maryland.

National Council on Radiation Protection and Measurement (NCRP). 1987. *Radiation Exposure of the U.S. Population from Consumer Products and Miscellaneous Sources.* NCRP Report 95. Bethesda, Maryland. (December 30).

National Environmental Policy Act of 1969 (NEPA). 42 USC 4321 et seq.

National Historic Preservation Act of 1966, as amended (NHPA). 16 USC 470aa et seq.

National Marine Fisheries Service (NMFS). 2002. "Small Takes of Marine Mammals Incidental to Specified Activities; Taking of Marine Mammals Incidental to Power Plant Operations." *Federal Register* 67(1):61–62. (January 2).

National Oceanic and Atmospheric Administration (NOAA). 2007. *Tornado Climatology*. Available URL: http://www.ncdc.noaa.gov/oa/climate/severeweather/tornadoes.html (Accessed October 3, 2007).

New Jersey Department of Environmental Protection (NJDEP). 1998. "Control and Prohibition of Particles from Manufacturing Processes." *New Jersey Administrative Code*, Title 7, Chapter 27, Subchapter 6.

New Jersey Department of Environmental Protection (NJDEP). 2007. *Hope Creek Air Operating Permit,* Title V, Permit No. BOP05003, FID 65500.

Nuclear Energy Institute (NEI). 2003. *Economic Benefits of Millstone Power Station: An Economic Impact Study by the Nuclear Energy Institute*. (July).

Nuclear Energy Institute (NEI). 2004a. *Economic Benefits of Diablo Canyon Power Plant: An Economic Impact Study by the Nuclear Energy Institute in Cooperation with Pacific Gas & Electric Company*. (February).

Nuclear Energy Institute (NEI). 2004b. *Economic Benefits of Indian Point Energy Center: An Economic Impact Study by the Nuclear Energy Institute*. (April).

Nuclear Energy Institute (NEI). 2004c. *Economic Benefits of the Duke Power-Operated Nuclear Power Plants: An Economic Impact Study by the Nuclear Energy Institute*. (December).

Nuclear Energy Institute (NEI). 2004d. *Economic Benefits of Palo Verde Nuclear Generating Station: An Economic Impact Study by the Nuclear Energy Institute*. (November).

Nuclear Energy Institute (NEI). 2005a. *Economic Benefits of Three Mile Island Unit 1: An Economic Impact Study by the Nuclear Energy Institute*. (November).

Nuclear Energy Institute (NEI). 2005b. *Economic Benefits of Wolf Creek Generating Station: An Economic Impact Study by the Nuclear Energy Institute*. (July).

Nuclear Energy Institute (NEI). 2006a. *Economic Benefits of Grand Gulf Nuclear Station: An Economic Impact Study by the Nuclear Energy Institute in Cooperation with Entergy*. (December).

Nuclear Energy Institute (NEI). 2006b. *Economic Benefits of the Exelon Pennsylvania Nuclear Fleet: An Economic Impact Study by the Nuclear Energy Institute*. (August).

Nuclear Energy Institute (NEI). 2006c. *Economic Benefits of PPL Susquehanna Nuclear Power Plant: An Economic Impact Study by the Nuclear Energy Institute in Cooperation with PPL Corporation*. (November).

Nuclear Energy Institute (NEI). 2007a. *Industry Ground Water Protection Initiative – Final Guidance Document*. NEI 07-07 [Final], Washington D.C. (August). Available URL: http://adamswebsearch2.nrc.gov/idmws/doccontent.dll?library=PU_ADAMS^PBNTAD01&ID=072670589 (Accessed November 5, 2007).

Nuclear Energy Institute (NEI). 2007b. *Disposal of Low-Level Radioactive Waste*. Washington, D.C. (April). Available URL: http://www.nei.org/keyissues/nuclearwastedisposal/lowlevelradioactivewaste/ (Accessed October 24, 2007).

Nuclear Information and Resource Service. 2007. *Rising Temperatures Undermine Nuclear Power's Promise*. Available URL: http://www.nirs.org/climate/background/ucsrisingtemps82307.pdf (Accessed November 11, 2007).

Nuclear Waste Policy Act (NWPA). 1982. 42 USC 10101 et seq.

Nuclear Waste Policy Amendments Act of 1987. 1987. PL 100-203. 42 USC 10261 et seq.

Occupational Safety and Health Act. 1970. 29 USC 651, et seq.

Patty, S.S., and D. Hill. 2006. *Status Report on Investigations of Potential Human Health Effects Associated with Power Frequency Electric and Magnetic Fields (EMF)*. DNR 12-1232007-183, PPSE-T-44. Prepared for Public Service Commission of Maryland. (October).

Pennak, R.W. 1953. *Fresh-water Invertebrates of the United States*. The Ronald Press Company, New York, New York.

Pollution Prevention Act. 1990. 42 USC 13101 et seq.

Pruppacher, H.R., and J.D. Klett. 1980. *Microphysics of Clouds and Precipitation.* D. Reidel Publishing Company, Dordrecht, Holland.

Resource Conservation and Recovery Act (RCRA). 1976. 42 USC 6901 et seq.

Roosenburg, W.H. 1969. "Greening and Copper Accumulation in the American Oyster, *Crassostrea virginica*, in the Vicinity of a Steam Electric Generating Station." *Chesapeake Science* 10:41–252.

Sackschewsky, M.R. 1997. *Threatened and Endangered Species Evaluation for 75 Licensed Commercial Nuclear Power Generating Plants*. Pacific Northwest National Laboratory, Richland, Washington.

Sackschewsky, M.R. 2004. *Threatened and Endangered Species Evaluation for Operating Commercial Nuclear Power Generating Plants*. PNNL-14468, prepared by Pacific Northwest National Laboratory for the U.S. Nuclear Regulatory Commission and U.S. Department of Energy.

Safe Drinking Water Act (SDWA). 1974. 42 USC 300F et seq.

Science News. 1998. "Something's Bugging Nuclear Fuel." 153(21):325. (May 23).

Southern California Edison. 2007. "Power Generation - San Onofre Nuclear Generating Station." Available URL: http://www.sce.com/PowerandEnvironment/PowerGeneration/SanOnofreNuclearGeneratingStation/PublicSafety.htm (Accessed November 7, 2007).

Sprecher, S.L., and K.D. Getsinger. 2000. *Zebra Mussel Chemical Control Guide*. ERDC/EL TR-00-1. U.S. Army Corps of Engineers, Engineer Research and Development Center, Vicksburg, Mississippi. (January).

System Energy Resources, Inc. 2005. Early Site Permit Application for the Grand Gulf Nuclear Station Site, Part 3, Environmental Report Section 2.0, revision 2. Available URL: http://adamswebsearch2.nrc.gov/idmws/ViewDocByAccession.asp?AccessionNumber=ML052780449 (Accessed October 17, 2007).

Texas Tech University (TTU). 2006. *A Recommendation for an Enhanced Fujita Scale.* Submitted to the National Weather Service and Other Interested Users by TTU Wind Science and Engineering Center, Lubbock, Texas. (January 26).

Todar, K. 2004. "Pseudomonas aeruginosa." In *Todar's Online Textbook of Bacteriology*. University of Wisconsin-Madison, Department of Bacteriology, Madison, Wisconsin. Available URL: http://textbookofbacteriology.net/pseudomonas.html (Accessed September 7, 2007).

Toxic Substances Control Act (TSCA). 1976. 15 USC 2601 et seq.

Tyndall, R.L. 1981. *Presence of Pathogenic Micro-Organisms in Power Plant Cooling Waters, Report for October 1, 1979 to September 30, 1981*. NUREG/CR-2980 (ORNL/TM-8523), Oak Ridge National Laboratory, Oak Ridge, Tennessee.

Tyndall, R.L. 1983. *Presence of Pathogenic Microorganisms in Power Plant Cooling Waters: Final Report for October 1, 1981, to June 30, 1983.* NUREG/CR-3364 (ORNL/TM-8809), Oak Ridge National Laboratory, Oak Ridge, Tennessee.

Tyndall, R.L., S.W. Christensen, and J.A. Solomon. 1985. *Legionnaires' Disease Bacteria in Power Plant Cooling Systems: Phase II Final Report*. EPRI/EA-4017, Electric Power Research Institute, Palo Alto, California.

Tyndall, R.L., K.S. Ironside, P.L. Metler, E.L. Tan, T.C. Hazen, and C.B. Fliermans. 1989. "Effect of Thermal Additions on the Density and Distribution of Thermophilic Amoebae and Pathogenic Naegleria fowleri in a Newly Created Cooling Lake." *Applied and Environmental Microbiology* 55(3):722–732.

U.S. Atomic Energy Commission (AEC). 1973. *Final Environmental Statement Related to the Nuclear Generating Station Diablo Canyon Units 1 & 2*. (May).

U.S. Atomic Energy Commission (AEC). 1974. *Final Environmental Statement Related to the Operation of Oyster Creek Nuclear Generating Station*. Jersey Central Power and Light Company. (December).

U.S. Bureau of Labor Statistics (BLS). 2005a. *Fatal Occupational Injuries by Event or Exposure, All United States. 2005*. U.S. Department of Labor, Washington, D.C. Available URL: http://www.bls.gov/iif/oshwc/cfoi/cfch0005.pdf (Accessed October 14, 2007).

U.S. Bureau of Labor Statistics (BLS). 2005b. *2005 News Release, National Census of Fatal Occupational Injuries in 2005*. USDL-06-1364, U.S. Department of Labor, Washington, D.C. Available URL: http://www.bls.gov/iif/oshwc/cfoi/cfnr0012.pdf (Accessed October 14, 2007).

U.S. Bureau of Labor Statistics (BLS). 2005c. *Incidence Rates of Nonfatal Occupational Injuries and Illnesses by Industry and Case Types, 2005*. U.S. Department of Labor, Washington, D.C. Available URL: http://www.bls.gov/iif/oshwc/osh/os/ostb1619.pdf (Accessed October 14, 2007).

U.S. Census Bureau (USCB). 2005. *Glossary, Definitions and Explanations of Terms, Decennial Census Terms*. Available URL: http://www.census.gov/main/www/glossary.html (Accessed September 15, 2007).

U.S. Census Bureau (USCB). 2007. *Current Population Reports*. Series P60, Washington, D.C. Available URL: http://www.census.gov/main/www/cprs.html (Accessed September 2007).

U.S. Department of Agriculture (USDA). 2001. *Acres of Prime Farmland, 1997: National Resources Conservation Service Map m4983*. Available URL: http://www.nrcs.usda.gov/technical/land/meta/m4983.html (Accessed October 8, 2007).

U.S. Department of Energy (DOE). 2002. *A Graded Approach to Evaluating Radiation Doses to Aquatic and Terrestrial Biota*. DOE-STD-1153-2002, Washington, D.C. (July 2002).

U.S. Department of Energy (DOE). 2007. *Notice of Intent to Prepare an Environmental Impact Statement for the Disposal of Greater-Than-Class C Low-Level Radioactive Waste.* Office of Environmental Management, Washington, D.C. (see 72 FR 40135). Available URL: http://www.gtcceis.anl.gov/ (Accessed October 19, 2007).

U.S. Environmental Protection Agency (EPA). 1974. *Information on Levels of Environmental Noise Requisite to Protect Public Health and Welfare with an Adequate Margin of Safety.* EPA-550/9-74-004, Washington, D.C. Available URL: http://www.nonoise.org/library/levels74/levels74.htm (Accessed November 17, 2008).

U.S. Environmental Protection Agency (EPA). 1996. *Protecting Natural Wetlands, A Guide to Stormwater Best Management Practices*. EPA-843-B-96-001, Office of Water (October).

U.S. Environmental Protection Agency (EPA). 2002. *Case Study Analysis for the Proposed Section 316(b) Phase II Existing Facilities Rule*. EPA-821-R-02-002, Office of Science and Technology, Washington, D.C. (February).

U.S. Environmental Protection Agency (EPA). 2007. *National Pollutant Discharge Elimination System — Suspension of Regulations Establishing Requirements for Cooling Water Intake Structures at Phase II Existing Facilities*. Available URL: http://www.epa.gov/fedrgstr/EPA-WATER/2007/July/Day-09/w13202.htm (Accessed October 17, 2007).

U.S. Environmental Protection Agency (EPA). 2008. *National Ambient Air Quality Standards (NAAQS)*. Available URL: http://www.epa.gov/air/criteria.html, last updated March 28, 2008 (Accessed August 2008).

U.S. Fish and Wildlife Service (USFWS). 2007a. *National Wetlands Inventory.* U.S. Department of the Interior. Available URL: http://wetlandsfws.er.usgs.gov/NWI/index.html (Accessed November 7, 2007).

U.S. Fish and Wildlife Service (USFWS). 2007b. *USFWS Threatened and Endangered Species System (TESS)*. Available URL: http://ecos.fws.gov/tess_public/StartTESS.do (Accessed November 20, 2007).

U.S. General Accounting Office (GAO). 2004. *Low-Level Radioactive Waste – Disposal Availability Adequate in Short Term, but Oversight Needed to Identify Any Future Shortfalls*. GAO-04-604, Washington, D.C. (June). Available URL: http://www.gao.gov/new.items/d04604.pdf (Accessed October 24, 2007).

U.S. Geological Survey (USGS). 1999. *Ecological Status and trends of the Upper Mississippi River System 1998: A Report of the Long Term Resource Monitoring Program*. TRMP 99-T001, Upper Midwest Environmental Science center, La Crosse, Wisconsin. Available URL: http://www.umesc.usgs.gov/reports_publications/status_and_trends.html (Accessed November 28, 2007).

U.S. Geological Survey (USGS). 2007. *National Land Cover Database 2001 (NLCD 2001)*. Available URL: http://www.mrlc.gov/nlcd.php (Accessed September 5, 2007).

U.S. Nuclear Regulatory Commission (NRC). 1974. *Measuring, Evaluating, and Reporting Radioactivity in Solid Wastes and Releases of Radioactive Materials in Liquid and Gaseous Effluents from Light-Water-Cooled Nuclear Power Plants*, Revision 1. Regulatory Guide 1.21. (June).

U.S. Nuclear Regulatory Commission (NRC). 1977. *Calculation of Annual Doses to Man from Routine Releases of Reactor Effluents for the Purpose of Evaluating Compliance with 10 CFR Part 50, Appendix 1*. Regulatory Guide 1.109, Office of Standards Development. (October).

U.S. Nuclear Regulatory Commission (NRC). 1993. Vol. 14 in *Radioactive Materials Released from Nuclear Power Plants*. NUREG/CR-2907.

U.S. Nuclear Regulatory Commission (NRC). 1996. *Generic Environmental Impact Statement for License Renewal of Nuclear Plants*. NUREG-1437, Vols. 1 and 2, Office of Nuclear Regulatory Research, Washington, D.C.

U.S. Nuclear Regulatory Commission (NRC). 1999. *Generic Environmental Impact Statement for License Renewal of Nuclear Plants, Supplement 1: Regarding the Calvert Cliffs Nuclear Power Plant*. NUREG-1437, Supplement 1, Office of Nuclear Reactor Regulation, Washington, D.C. (October).

U.S. Nuclear Regulatory Commission (NRC). 2002a. *Generic Environmental Impact Statement for Decommissioning of Nuclear Facilities, Supplement 1: Regarding the Decommissioning of Nuclear Power Reactors*. NUREG-0586, Supplement 1, Washington, D.C.

U.S. Nuclear Regulatory Commission (NRC). 2002b. *Generic Environmental Impact Statement for License Renewal of Nuclear Plants, Supplement 5: Regarding Turkey Point, Units 3 and 4*. NUREG-1437, Supplement 5, Office of Nuclear Reactor Regulation, Washington, D.C. (January).

U.S. Nuclear Regulatory Commission (NRC). 2003a. *Generic Environmental Impact Statement for License Renewal of Nuclear Plants, Supplement 11: Regarding the St. Lucie Units 1 and 2*. NUREG-1437, Supplement 11, Washington, D.C., Office of Nuclear Reactor Regulation, Washington, D.C. (May).

U.S. Nuclear Regulatory Commission (NRC). 2003b. *Generic Environmental Impact Statement for License Renewal of Nuclear Plants, Supplement 13: Regarding H.B. Robinson Steam Electric Plant, Unit No. 2.* NUREG-1437, Supplement 13, Office of Nuclear Reactor Regulation, Washington, D.C. (December).

U.S. Nuclear Regulatory Commission (NRC). 2003c. *Generic Environmental Impact Statement for License Renewal of Nuclear Plants*, *Supplement 12: Regarding the Fort Calhoun Station, Unit 1*. NUREG-1437, Supplement 12, Office of Nuclear Reactor Regulation, Washington, D.C. (August).

U.S. Nuclear Regulatory Commission (NRC). 2003d. *Generic Environmental Impact Statement for License Renewal of Nuclear Plants, Supplement 10: Regarding Peach Bottom Atomic Power Station, Units 2 and 3*. NUREG-1437, Supplement 10, Office of Nuclear Reactor Regulation, Washington, D.C. (January).

U.S. Nuclear Regulatory Commission (NRC). 2004a. *Generic Environmental Impact Statement for License Renewal of Nuclear Plants, Supplement 17: Regarding Dresden Nuclear Power Station, Units 2 and 3*. NUREG-1437, Supplement 17, Office of Nuclear Reactor Regulation, Washington, D.C. (June).

U.S. Nuclear Regulatory Commission (NRC). 2004b. *Generic Environmental Impact Statement for License Renewal of Nuclear Plants, Supplement 15: Regarding Virgil C. Summer Station*. NUREG-1437, Supplement 15, Office of Nuclear Reactor Regulation, Washington, D.C. (February).

U.S. Nuclear Regulatory Commission (NRC). 2004c. *Generic Environmental Impact Statement for License Renewal of Nuclear Plants, Supplement 16: Regarding the Quad Cities Nuclear Power Station, Units 1 and 2*. NUREG-1437, Supplement 16, Office of Nuclear Reactor Regulation, Washington, D.C. (June).

U.S. Nuclear Regulatory Commission (NRC). 2005a. *Generic Environmental Impact Statement for License Renewal of Nuclear Plants, Supplement 21: Regarding Browns Ferry Nuclear Plant, Units 1, 2, and 3.* NUREG-1437, Supplement 21, Office of Nuclear Reactor Regulation, Washington, D.C. (June).

U.S. Nuclear Regulatory Commission (NRC). 2005b. *Staff Review of the National Academies Study of the Health Risks from Exposure to Low Levels of Ionizing Radiation (BEIR VII)*. Commission paper SECY-05-0202. ADAMS Accession Number ML052640532. (October 29).

U.S. Nuclear Regulatory Commission (NRC). 2006a. *Tornado Climatology of the Contiguous United States.* NUREG/CR-4461, Rev. 2, Division of Risk Assessment and Special Projects, Office of Nuclear Regulatory Research, Washington, D.C.

U.S. Nuclear Regulatory Commission (NRC). 2006b. *Generic Environmental Impact Statement for License Renewal of Nuclear Plants, Supplement 27: Regarding Palisades Nuclear Plant*. NUREG-1437, Supplement 27, Office of Nuclear Reactor Regulation, Washington, D.C. (October).

U.S. Nuclear Regulatory Commission (NRC). 2006c. *Liquid Radioactive Release Lessons Learned Task Force Final Report*. (September).

U.S. Nuclear Regulatory Commission (NRC). 2006d. *Generic Environmental Impact Statement for License Renewal of Nuclear Plants, Supplement 24: Regarding Nine Mile Point Nuclear Station, Units 1 and 2.* NUREG-1437, Supplement 24, Office of Nuclear Reactor Regulation, Washington, D.C. (May).

U.S. Nuclear Regulatory Commission (NRC). 2006e. *Generic Environmental Impact Statement for License Renewal of Nuclear Plants, Supplement 25: Regarding Brunswick Steam Electric Plant, Units 1 and 2*. NUREG-1437, Supplement 25, Office of Nuclear Reactor Regulation, Washington, D.C. (April).

U.S. Nuclear Regulatory Commission (NRC). 2006f. *Generic Environmental Impact Statement for License Renewal of Nuclear Plants, Supplement* 26: *Regarding Monticello Nuclear Generating Plant*. NUREG-1437, Supplement 26, Office of Nuclear Reactor Regulation, Washington, D.C. (September).

U.S. Nuclear Regulatory Commission (NRC). 2007a. *2007–2008 Information Digest.* NUREG-1350, Vol. 19, Washington, D.C. (August). Available URL: http://www.nrc.gov/reading-rm/doc-collection/nuregs/staff/sr1350/v19/sr1350v19.pdf (Accessed November 8, 2007).

U.S. Nuclear Regulatory Commission (NRC). 2007b. *Meteorological Monitoring Programs for Nuclear Power Plants.* Regulatory Guide 1.23, Rev. 1. (March).

U.S. Nuclear Regulatory Commission (NRC). 2007c. *Generic Environmental Impact Statement for License Renewal of Nuclear Plants, Supplement 28: Regarding Oyster Creek Nuclear Generating Station*. NUREG-1437, Supplement 28, Office of Nuclear Reactor Regulation, Washington, D.C. (January).

U.S. Nuclear Regulatory Commission (NRC). 2007d. *Plant Sites with Groundwater Contamination*. Available URL: http://www.nrc.gov/reactors/operating/ops-experience/tritium/sites-grndwtr-contam.html (Accessed October 17, 2007).

U.S. Nuclear Regulatory Commission (NRC). 2007e. *Generic Environmental Impact Statement for License Renewal of Nuclear Plants, Supplement 29: Regarding Pilgrim Nuclear Power Station.* NUREG-1437, Supplement 29, Office of Nuclear Reactor Regulation, Washington, D.C. (July).

U.S. Nuclear Regulatory Commission (NRC). 2007f. *Generic Environmental Impact Statement for License Renewal of Nuclear Plants, Supplement 30: Regarding Vermont Yankee Nuclear Power Station.* NUREG-1437, Supplement 30, Office of Nuclear Reactor Regulation, Washington, D.C. (August).

U.S. Nuclear Regulatory Commission (NRC). 2007g. *Radiation Protection and the "Tooth Fairy" Issue*. Available URL: http://www.nrc.gov/reading-rm/doc-collections/fact-sheets/tooth-fairy.html (Accessed October 4, 2007).

U.S. Nuclear Regulatory Commission (NRC). 2007h. *Low-Level Waste Compacts*. Available URL: http://www.nrc.gov/waste/llw-disposal/compacts.html (Accessed October 18, 2007).

U.S. Nuclear Regulatory Commission (NRC). 2007i. *Typical Dry Cask Storage System*. Available URL: http://www.nrc.gov/waste/spent-fuel-storage/diagram-typical-dry-cask-system.html (Accessed October 18, 2007).

U.S. Nuclear Regulatory Commission (NRC). 2007j. *Locations of Independent Spent Fuel Storage Installations*. Available URL: http://www.nrc.gov/waste/spent-fuel-storage/locations.html (Accessed October 25, 2007).

United Nations Scientific Committee on the Effects of Atomic Radiation (UNSCEAR). 2000. *Sources and Effects of Ionizing Radiation: UNSCEAR 2000 Report to the General Assembly, with Scientific Annexes. Vol. I: Sources*. New York, New York. Available URL: http://www.unscear.org/unscear/en/publications/2000_1.html (Accessed October 4, 2007).

Veil, J.A., J.K. Rice, and M.E.S. Raivel. 1997. *Biocide Usage in Cooling Towers in the Electric Power and Petroleum Refining Industries.* Prepared by Argonne National Laboratory, Argonne, Illinois, for the U.S. Department of Energy, Office of Fossil Energy, Washington, D.C. (September). Available URL: http://www.ead.anl.gov/pub/doc/ANL-Biocide_Usage.pdf (Accessed November 1, 2007).

Vér, I.L., and L.L. Beranek. 2006. *Noise and Vibration Control Engineering: Principles and Applications, 2nd ed.*, John Wiley & Sons, Inc., Hoboken, N.J.

Wertheimer, N., and E. Leeper. 1979. "Electrical Wiring Configurations and Childhood Cancer." *American Journal of Epidemiology* 109:273–284.

Williams, J.D., M.L. Warren, K.S. Cummings, J.L. Harris, and R.J. Neves. 1993. "Conservation Status of Freshwater Mussels of the United States and Canada." *Fisheries* 18:6–22.

Wright, T., J. Tomlinson, T. Schueler, K. Cappiella, A. Kitchell, and D. Hirschman. 2006. *Direct and Indirect Impacts of Urbanization on Wetland Quality: Wetlands and Watersheds Article # 1.* Prepared by Center for Watershed Protection for U.S. Environmental Protection Agency (EPA), Office of Wetlands, Oceans and Watersheds, Washington, D.C. (December).

4. Environmental Consequences and Mitigating Actions

4.1 Introduction

The U.S. Nuclear Regulatory Commission (NRC) evaluated the environmental consequences of the proposed action (i.e., license renewal) including the (1) impacts associated with continued operations and refurbishment activities similar to those that have occurred during the current license term; (2) impacts of various alternatives to the proposed action; (3) impacts from the termination of nuclear power plant operations and decommissioning after the license renewal term (with emphasis on the incremental effect caused by an additional 20 years of operation); (4) impacts associated with the uranium fuel cycle; (5) impacts of postulated accidents (design-basis accidents and severe accidents); (6) cumulative impacts of the proposed action; and (7) resource commitments associated with the proposed action, including unavoidable adverse impacts, the relationship between short-term use and long-term productivity, and irreversible and irretrievable commitment of resources.

Contents of Chapter 4

- Introduction (Section 4.1)
- Land use and visual resources (Section 4.2)
- Air quality, and noise (Section 4.3)
- Geology and soils (Section 4.4)
- Hydrology (Section 4.5)
- Ecology (Section 4.6)
- Historic and cultural resources (Section 4.7)
- Socioeconomics (Section 4.8)
- Human health (Section 4.9)
- Environmental justice (Section 4.10)
- Waste management and pollution prevention (Section 4.11)
- Impacts Common to All Alternatives (Section 4.12)
- Cumulative Impacts of the Proposed Action (Section 4.13)
- Resource commitments

In evaluating impacts for this revision of the *Generic Environmental Impact Statement for License Renewal of Nuclear Plants* and its Addendum 1 (NRC 1996, 1999a; referred to collectively in this document as the "1996 GEIS"), the staff used the NRC's standard of significance that is based on the Council on Environmental Quality (CEQ) terminology for "significantly" (see Title 40, Section 1508.27 in the *Code of Federal Regulations* [40 CFR 1508.27]), which considers both "context" and "intensity." The NRC established three significance levels – small, moderate, and large – and has used these levels and associated definitions as standard practice in preparing its environmental

impact statements (EISs). As indicated in Section 1.5, the definitions of the three significance levels are as follows:

- **Small impact:** Environmental effects are not detectable or are so minor that they will neither destabilize nor noticeably alter any important attribute of the resource.

- **Moderate impact:** Environmental effects are sufficient to alter noticeably, but not to destabilize, important attributes of the resource.

- **Large impact:** Environmental effects are clearly noticeable and are sufficient to destabilize important attributes of the resource.

These levels are used for describing the impacts of all aspects of the proposed action as well as the impacts of alternatives to the proposed action. Resource-specific definitions are provided where applicable.

4.1.1 Environmental Consequences of the Proposed Action

As described in Section 2.1, a number of activities associated with the proposed action could have environmental consequences. The proposed action includes the activities associated with normal operations during the license renewal term, including (1) plant operation, (2) activities needed to support operations and meet infrastructure requirements (e.g., road improvements, new parking lots, waste storage facilities, and new ancillary buildings), and (3) refurbishment actions needed to replace critical portions of reactor systems.

The assessment includes a determination of the magnitude of the impact (small, moderate, or large, as defined above) and whether or not the analysis of the environmental issue could be applied to all plants. Issues are assigned a Category 1 or a Category 2 designation as follows:

Category 1 issues are those that meet all of the following criteria:

(1) The environmental impacts associated with the issue were determined to apply either to all plants or, for some issues, to plants having a specific type of cooling system or other specified plant or site characteristics.

(2) A single significance level (i.e., small, moderate, or large) was assigned to the impacts (except for collective offsite radiological impacts from the fuel cycle and from the disposal of high-level waste and spent fuel).

(3) The mitigation of adverse impacts associated with the issue was considered in the analysis, and it was determined that additional plant-specific mitigation measures would probably not be sufficiently beneficial to warrant implementation.

For issues that meet the three Category 1 criteria, no additional plant-specific analysis is required in future supplemental EISs (SEISs) unless new and significant information is identified.

Category 2 issues are those that do not meet one or more of the criteria of Category 1 and for which, therefore, an additional plant-specific review is required.

A total of 78 impact issues that are related to the proposed action were identified (summarized in Table 2.1-1). For each potential environmental impact issue identified, the GEIS revision (1) describes the nuclear power plant activity that could affect the resource, (2) identifies the resource that is affected, (3) evaluates past license renewal reviews and other available information, (4) assesses the nature and magnitude of the environmental impact on the affected resource, (5) characterizes the significance of the effect, (6) determines whether the results of the analysis apply to all nuclear power plants (whether the impact issue is Category 1 or Category 2), and (7) considers additional mitigation measures for adverse impacts. In cases for which the issue differs from that presented in the 1996 GEIS, the rationale for the new treatment is presented.

4.1.2 Environmental Consequences of Continued Operations and Refurbishment Activities during the License Renewal Term

In most cases, the impacts of continued operations and refurbishment activities during the license renewal term are similar to the impacts that have resulted from the operation of licensed nuclear power plants during the current license term.

The activities that would occur during normal operations of the license renewal term and that are thus the subject of this evaluation are discussed in Section 2.1. It is important to note that the impacts of the original construction of the nuclear power plants and past operational impacts are not the focus of this evaluation of environmental consequences. Both the impacts of original construction and the impacts of past operations have affected and, in many cases, established the current conditions at each plant and vicinity. These conditions serve as the baseline for the impact analyses presented in this section. Past impacts are presented in the description of the affected environment in Chapter 3. In most cases, impacts of the proposed action would not represent a change from current conditions and are considered small. In other cases, the proposed action could result in a change from current conditions, and the impacts could be considered moderate or large.

A total of 78 impact issues (including 5 issues related to waste management at both nuclear power plants and other nuclear fuel cycle facilities) that are related to continued operations and refurbishment activities during the license renewal term were identified and evaluated; they are summarized in Table 2.1-1). These impact issues are discussed by resource topic in the remainder of this section. The assessment approaches specific to each resource area are described in Appendix D.

4.1.3 Environmental Consequences of the No-Action Alternative

The no-action alternative represents a decision by the NRC not to issue a renewed operating license. If a license is not renewed, the licensee would have to shut the plant down. At some point in time, all plants eventually would be required to shut down and undergo decommissioning. Under the no-action alternative, these eventualities would occur sooner than if the NRC issued a renewed license.

Denying license renewal and ceasing operation under the no-action alternative may lead to a variety of potential outcomes, but these are essentially the same as the ones that would eventually occur once plant operations ceased after license renewal (see Section 4.12.2 for a discussion of these effects). Reactor shutdown would result in a net reduction in power production capacity. The power not generated by the nuclear plant during a license renewal term would likely be replaced by (1) generating alternatives other than the nuclear plant, (2) demand-side management, (3) power purchased from other electricity providers, or (4) some combination of these options. Note that NRC's consideration of the no-action alternative does not involve the determination of whether any power is needed or should be generated. 2.2The decision to generate power and the determination of how much power is needed are at the discretion of State, Federal (non-NRC) and utility officials.

4.1.4 Environmental Consequences of Alternative Energy Sources

This alternative considers the potential environmental impacts that could result from construction and operation of alternative electricity generation technologies (including a new nuclear reactor) that could replace the power contributed by an existing nuclear plant. The analyses provided in each resource area in this chapter apply to a discrete set of electricity-generating technologies that the NRC, on the basis of reviews of energy technologies and available literature, believes are either currently viable on a utility scale or can be expected to become so within the foreseeable future. Other technologies that hold promise for becoming part of the bulk electricity portfolio sometime in the future are mentioned but are not evaluated fully after their probable development path and schedule toward utility-scale bulk electricity production are considered. Although the analyses below are provided for individual discrete technologies, the NRC recognizes that, should the need arise to replace the generating capacity of a reactor, either because its operating license will not be renewed or because of

changes in strategies to meet changing regional or local demand, the necessary alternative power is likely to be provided by a suite or portfolio of technologies, including, perhaps, expansions of the capacities of one or more existing power-generating facilities within the region. The number of possible combinations of the technologies discussed below to replace lost capacity is quite large. An evaluation of even a small fraction of these possible combinations would not significantly advance the knowledge base supporting the licensing decision. Consequently, individual technologies rather than combinations are explicitly evaluated as alternatives in this GEIS. Data on commercial products or services are included for information purposes only. No endorsement is implied. The NRC does not engage in energy planning decisions and makes no judgment as to which of the energy alternatives evaluated herein would be the most likely alternative in any given case.

In addition to the installation of alternative energy technologies, replacement power could also be provided by importing power over the bulk electricity grid. Power replaced through energy purchases would likely have similar characteristics to some of the alternatives evaluated below, and would be dependent on available energy sources at the time of the purchase. At the time of publication, coal, natural gas, and nuclear are the most-prevalent sources of purchased replacement power, though an increasing number of renewable sources are emerging. As such, the effects of purchased power are likely to be similar to the effects of operating a combination of other alternatives, or similar to the fossil or nuclear alternatives. Impacts overall are likely to be lower for purchased power (if existing generation and transmission capacity is available) since no construction is necessary. On the other hand, since existing plants are likely to have less-stringent emissions controls, operational impacts to air quality, human health, ecology, and environmental justice may be slightly greater for purchased power than for new construction.

4.1.5 Environmental Consequences of Terminating Nuclear Power Plant Operations and Decommissioning

All operating nuclear power plants will terminate operations and be decommissioned at some point after the end of their operating licenses or after a decision is made to cease operations. License renewal would potentially delay this eventuality for an additional 20 years beyond the current license period. The impacts of decommissioning nuclear plants were evaluated in the *Generic Environmental Impact Statement for Decommissioning Nuclear Facilities: Supplement 1, Regarding the Decommissioning of Nuclear Power Reactors*, NUREG-0586 (NRC 2002a). The effects of license renewal on the impacts of terminating nuclear power plant operations and decommissioning are considered a single environmental issue. Because the impacts are expected to be small at all plants and for all environmental resources, it is considered a Category 1 issue. The impacts of terminating nuclear power plant operations and decommissioning for each resource area are discussed in Section 4.12.2.

4.2 Land Use and Visual Resources

4.2.1 Environmental Consequences of the Proposed Action – Continued Operations and Refurbishment Activities

Since September 11, 2001, changes in onsite land use have occurred at nuclear power plants across the nation, with increased restrictions on site access and changes in barricades and landscaping to enhance security. Generally, land use conditions are expected to continue unchanged until plant decommissioning. Similarly, the use of transmission line rights-of-way (ROWs) is projected to continue with few, if any, changes in restrictions and easements.

In addition, the presence and visual profiles of operating nuclear power plants and transmission lines have been well established during the current licensing term. These conditions would remain unchanged during the 20-year license renewal term.

4.2.1.1 Land Use

In the 1996 GEIS, the impacts of nuclear power plant operations on onsite land use, power line right of way, and offsite land use (license renewal term and refurbishment) were evaluated separately. While impacts to onsite land use and power line right of ways were determined to be small at all plants, anticipated changes in population and tax revenues attributed to license renewal and power plant refurbishment were predicted to have small to moderate impacts on offsite land use. Subsequent license renewal reviews have shown, however, that license renewal and power plant refurbishment have had little or nor effect on offsite land use.

Land use impact issues evaluated for the revised GEIS include: (1) the impacts of continued plant operations and refurbishment activities on onsite land use; (2) the impacts of continued plant operations and refurbishment activities on offsite land use; and (3) the impacts of transmission line ROWs on offsite land use.

Impacts on Onsite Land Use

Operational activities at a nuclear power plant during the license renewal term would be similar to those occurring during the current license term. Generally, onsite land use conditions would remain unchanged. However, additional spent nuclear fuel and low-level radioactive waste generated during the license renewal term could require the construction of new or expansion of existing onsite storage facilities. Should additional storage facilities be required, this action would be addressed in separate license reviews conducted by the NRC. The NRC has not identified any information or situations during previous license renewal reviews that would alter the conclusion that impacts would be small for all commercial nuclear power plants.

On the basis of these considerations, the NRC concludes that the impact of continued plant operations during the license renewal term and refurbishment on onsite land use would be small for all nuclear plants and remains a Category 1 issue.

Impacts on Offsite Land Use

The impacts of continued plant operations during the license renewal term and refurbishment on offsite land use were evaluated separately in the 1996 GEIS. The NRC predicted that impacts associated with refurbishment and changes in population and tax revenue on offsite land use could range from small to moderate. Subsequent license renewal reviews, however, have shown no power plant-related population changes or significant tax revenue changes due to license renewal. Non-outage employment levels at nuclear power plants have remained relatively unchanged or have decreased. With no increase in the number of workers, there has been no increase in housing, infrastructure, or demand for services beyond what has already occurred. Operational activities during the license renewal term would be similar to those occurring during the current license term and would not affect offsite land use beyond what has already been affected. The NRC has not identified any information or situations, including low population areas or population and tax revenue changes resulting from license renewal that would alter the conclusion that impacts would be small for all nuclear power plants.

For plants that have the potential to impact a coastal zone or coastal watershed, as defined by each State participating in the National Coastal Zone Management Program, licensees must certify that the proposed activity is consistent with the State Coastal Zone Management Program. Licensees must coordinate with the State agency that manages the State Coastal Zone Management Program with regard to the compatibility certification process for Federal projects within coastal zones.

On the basis of these considerations, the NRC concludes that the impact of continued plant operations during the license renewal term and refurbishment on offsite land use would be small at all plants and is considered a Category 1 issue.

Impacts of Transmission Line ROWs on Offsite Land Use

Operational activities during the license renewal term would be similar to those occurring during the current license term and would not affect offsite land use in transmission line ROWs beyond what has already been affected. Certain land use activity in the ROW is usually restricted. Land cover is generally managed through a variety of maintenance procedures so that vegetation growth and building construction do not interfere with power line operation and access. Land use within ROWs are limited to activities that do not endanger power line operation; these include recreation, off-road vehicle use, grazing, agricultural cultivation,

irrigation, roads, environmental conservation, and wildlife areas. Transmission lines do not preclude the use of the land for farming or environmental and recreational use. Transmission lines connecting nuclear power plants to the electrical grid are no different from transmission lines connecting any other power plant.

The impact of transmission lines on offsite land use during the license renewal term were considered to be small for all plants and were designated as a Category 1 issue in the 1996 GEIS. No new information that would alter that conclusion has been identified in subsequent license renewal reviews.

On the basis of these considerations, the NRC concludes that the impact of transmission lines on offsite land use during the license renewal term would be small for all plants and remains a Category 1 issue.

4.2.1.2 Visual Resources

In the 1996 GEIS, the NRC considered the visual resource impacts of continued plant operations, refurbishment, and transmission lines separately. Subsequent license renewal environmental reviews conducted by the NRC have shown that the appearance of nuclear power plants and transmission lines have not changed significantly over time, so aesthetic impacts are not anticipated. The three issues identified in the 1996 GEIS were combined and are evaluated as a single issue.

Aesthetic Impacts

As previously discussed, the NRC considered the impacts of continued plant operations during the license renewal term and refurbishment on visual resources separately in the 1996 GEIS. The NRC concluded that for both issues the impacts on visual resources would be small for all plants and both were determined to be Category 1 issues, because the existing visual profiles of nuclear power plants were not expected to change during the license renewal term.

A case study performed for the 1996 GEIS found a limited number of situations where nuclear power plants had a negative effect on visual resources. Negative perceptions were based on aesthetic considerations (for instance, the plant is out of character or scale with the community or the viewshed), physical environmental concerns, safety and perceived risk issues, an anti-plant attitude, or an anti-nuclear orientation. It is believed that these negative perceptions would persist regardless of mitigation measures. Subsequent license renewal reviews have not revealed any new information that would change this perception.

In addition, the visual appearance of transmission lines is not expected to change during the license renewal term. After the containment building and cooling towers, transmission line

towers are probably the most frequently observed structure associated with nuclear power plants. Transmission lines from nuclear power plants are generally indistinguishable from those from other power plants. Since electrical transmission lines are common throughout the U.S., they are generally perceived with less prejudice than the nuclear power plant itself. Also, the visual impact of transmission lines tends to wear off when viewed repeatedly. Replacing or moving towers or burying cables to reduce the visual impact would be impractical from both an efficiency and cost-benefit perspective. The impact of transmission lines during the license renewal term on visual resources was considered to be small for all plants and designated as a Category 1 issue in the 1996 GEIS. No new information that would alter that conclusion has been identified in subsequent license renewal reviews.

On the basis of these considerations, the NRC concludes that the aesthetic impacts of continued plant operations during the license renewal term, refurbishment, and transmission lines on visual resources would be small for all plants and remains a Category 1 issue.

4.2.2 Environmental Consequences of Alternatives to the Proposed Action

Construction – Construction of a new power plant would involve the permanent commitment of land for the power plant, plant intake and discharge structures, water treatment facilities, and cooling towers. Other construction-related land use impacts would include land clearing, excavations, drilling of monitoring wells, and the installation of temporary support facilities. Material laydown areas and onsite concrete batch plants would also represent additional temporary land use and visual impacts. These would be removed after the power plant is completed. Depending on location, construction of electrical substation, switchyards, transmission lines, railroad spurs, access roads may also be required. Some of these facilities could affect offsite land use.

Construction at an existing nuclear power plant site or brownfield site would have less of an impact on land use and visual resources than a greenfield site. Construction at an existing nuclear power plant site would have the least impact on land use, because the plant could make use of existing intake and discharge structures, substations, transmission lines, office buildings, parking lots, and access roads. Constructing a power plant at a greenfield site would remove land from other productive uses such as agriculture. It could convert potential prime farmland to industrial use. In addition, construction at a greenfield site would have a more dramatic impact on visual resources, since the industrial power plant would likely be significantly different from the surrounding landscape. Constructing at a brownfield site would have less of an impact on the land use than a greenfield site.

The increase in traffic to and from the construction site could require changes to existing transportation infrastructure and traffic patterns resulting in offsite land use impacts and visual impacts. These impacts would cease at the end of construction.

Operations – Land would be in use throughout the period of power plant operation. Visual resources would also be affected. Visual impacts would be similar to other industrial activities at an existing nuclear power plant site or brownfield site. However, the height of new buildings structures as well as transmission line, meteorological, and cooling towers could add to the visual impact. Condensate plumes during plant operations may be visible for some distance during certain weather conditions.

4.2.2.1 Fossil Energy Alternatives

Construction – Impacts on land use from constructing coal- or natural gas-fired power plants would be similar. However, a coal-fired power plant would need more land than a natural gas-fired plant due to the need for coal fuel delivery and waste storage facilities. As a result, the coal-fired power plant would also have a higher visual impact.

4.2.2.2 New Nuclear Alternatives

Construction – Land would be required for the construction of spent nuclear fuel and low-level radioactive waste storage facilities. The appearance of the reactor containment and turbine buildings would add to the visual impact.

4.2.2.3 Renewable Alternatives

Construction – Land requirements for renewable energy facilities vary greatly. Biomass fueled energy facilities with utility-scale capacities could require at least 300 ac (122 ha). Flat plate solar photovoltaic systems would require approximately 6.2 ac (2.5 ha)/MW; however, improvements in photovoltaic cell efficiency could reduce the amount of land required to 0.68 ac (0.28 ha)/MW by 2030. Solar thermal facilities with concentrators would require substantial land area. Projected land requirements for advanced power tower facilities generating 200 MW(e) in the year 2030 would be 612 ac (247 ha). Given the expected capacity factor of advanced power tower facilities, the land requirements equate to 1.1×10^{-3} ha/MWh/yr (EERE 1997). Land area required for an advanced solar power trough facility operating in 2030 with a rated capacity of 320 MW would be 792 ac (320 ha) (EERE 1997).

Wind energy facilities would require approximately 0.3 ac (0.12 ha)/MW. Utility-scale wind farms would require relatively large areas. However, unlike solar technologies, once construction is completed, land areas between the turbines can be put to other beneficial (nonintrusive) use. Substantially lesser amounts of land area would be required for geothermal facilities (estimated at 173 ac [70 ha] for a 49 MW facility) (BLM 1999), and very small amounts of land (for cable landings and substations, estimated at 100 ac [40.4 ha] for utility-scale offshore energy facilities) would be required for offshore wind and current facilities.

For renewable energy technologies that utilize combustion and/or steam cycles, the appearance of buildings, height and prominence of smokestacks, and condensate plumes, would have a visual impact.

Operations – The operational impacts of alternative energy technologies on land use and visual resources are presented in the following subsections.

Hydroelectric Energy Sources

Hydroelectric dams and reservoirs capable of generating utility-scale power would be substantial in scale and prominence and have a visual impact. Large dams that also serve as flood control could significantly affect land use patterns upstream and downstream beyond the decommissioning of the facility.

Geothermal

Geothermal facilities would be less prominent, typically located in remote areas and may generate a steam plume that is visible from long distances. Visual resources would be affected by wellheads, exposed transfer piping, and power plant structures, and could have a dramatic impact on a remote area. The intermittent creation of steam condensate plumes would be visible from great distances.

Wind

A relatively large area of land would be required for wind energy; however, only about 5 to 10 percent of the land area would be utilized by turbines, power collection and conditioning systems, and other support facilities. Land affected by the installation of buried power and communication cables interconnecting each turbine with a power substation would be minimally intrusive. Wind farms, although less complex than combustion-based facilities in their visual appearance, would have a visual impact due to the height of the turbines. Offshore wind farms could be sufficiently distant from the shore to attenuate most, if not all, of the visual impacts on onshore observers.

Biomass

The physical appearance of a biomass fuel-fired energy facility would be similar to that of a fossil fuel fired facility. The industrial footprint would be less. Additional land would be required, however, for growing biomass crops.

Municipal Solid Waste, Refuse-Derived Fuel and Landfill Gas

The physical appearance of a municipal solid waste, refuse-derived and landfill gas-fired energy facility would be similar to that of a fossil fuel fired facility. The industrial footprint would be less.

Additional land would be required, however, for refuse-derived fuel, or landfill gas handling facilities (e.g., storage piles, hammermills, grinders, bucket conveyors, blowers, pneumatic conveyance systems). Buildings, smokestacks, cooling towers, and condensate plumes would have a visual impact.

Solar Thermal

Land would be required for the powerblock (steam cycle, turbine/generator building, substation, cooling towers, condensate plume, and support equipment). Visual impacts would occur if a power tower technology is employed as well as the array of solar collectors.

Solar Photovoltaic

Utility-scale facility would require a very large area of land. Visual resources would be affected by the size of the facility.

Ocean Wave and Current

Land use would be only slightly affected by land-based support systems (cable landing, substation, and warehouse and repair facility); existing piers and docks are expected to be sufficient to support the offshore facility during operation. Above-water components are expected to be relatively inconspicuous, even when equipped with marker lights; their relatively small height above the water, their distance from shore, and the curvature of the earth may serve to partially or completely conceal them from onshore observers.

4.3 Air Quality and Noise

4.3.1 Environmental Consequences of the Proposed Action – Continued Operations and Refurbishment Activities

Ambient air quality and noise conditions at all nuclear power plants and associated transmission lines have been well established during the current licensing term. Notwithstanding significant changes to the nature and type of industrial activities in the area, these conditions are expected to remain unchanged during the 20-year license renewal term.

The focus of this section is the impacts of continued operations and refurbishment activities during the license renewal term on air quality and noise. Refurbishment and associated construction activities can affect air quality (e.g., fugitive dust, vehicle and equipment exhaust emissions, and automobile exhaust from commuter traffic). Baseline air quality, noise, and related meteorological conditions at operating plants are discussed in Sections 3.3.1 and 3.3.2, respectively. License renewal is expected to result in a continuation of similar conditions for an extended period commensurate with the license renewal term, typically 20 years. As a result,

the criteria air pollutants emitted and the noise generated during normal continued plant operations over the license renewal term are not expected to change substantially and thus should remain small.

4.3.1.1 Air Quality

Two issues related to impacts on air quality during the license renewal term are considered in this section:

- Impacts of continued operations (not considered in the 1996 GEIS) and refurbishment activities on air quality (this issue was evaluated in the 1996 GEIS); and

- Impacts of transmission lines on air quality. This issue was evaluated in the 1996 GEIS.

Impacts of Continued Operations and Refurbishment Activities on Air Quality

Continued Operations – The impact of continued plant operations during the license renewal term on air quality was not identified as an issue in the 1996 GEIS. It is evaluated here because of the potential for air quality to be affected by the operations of fossil-fuel-fired equipment needed for normal operations and by the operations of cooling towers in plants that use a closed-cycle cooling system. These potential impacts are discussed below.

Impacts on air quality during normal plant operations can result from operations of fossil-fuel-fired equipment needed for various plant functions (see Section 3.3.2). Each licensed plant typically employs emergency diesel generators for use as a backup power source. Emergency diesel generators and fire pumps typically require State or local operating permits. These generators provide a standby source of electric power for essential equipment required during plant upset or an emergency event. They also provide for safe reactor shutdown and for the maintenance of safe conditions at the power station during such an event. These diesel generators are typically tested once a month with several test burns of various durations (e.g., 1 to several hours). In addition to these maintenance tests, longer-running endurance tests are also typically conducted at each plant. Each generator is typically tested for 24 hours on a staggered test schedule (e.g., once every refueling outage). Plants with nonelectric fire pumps, typically also diesel-fired, usually employ test protocols identical or similar to those used for emergency generators. Maintenance procedures during these tests would include, for example, checks for leaks of lubricating oil or fuel from equipment, and pumps would be replaced as required. Most, if not all, State air pollution regulations provide exemptions for air pollution sources that are not routinely operated, which can be defined as sources with insignificant activity meeting specified operating criteria (e.g., so many hours of continuous operation over specified periods or so many hours of operation per year).

In addition to the emergency diesel generators, fossil fuel (i.e., diesel-, oil-, or natural-gas-fired) boilers are used primarily for evaporator heating, plant space heating, and/or feed water purification. These units typically operate at a variable load on a continuous basis throughout the year unless end use is restricted to one application, such as space heating. Air emissions include carbon monoxide (CO), nitrogen oxides (NO_x), carbon dioxide (CO_2), methane (CH_4), nitrous oxide (N_2O), particulate matter (PM), and volatile organic compounds (VOCs) for diesel-, natural-gas-, and oil-fired units. Natural-gas-fired units emit only trace amounts of VOCs and PM that has an aerodynamic diameter of 10 μm or less (PM_{10}). The utility boilers at commercial plants are relatively small when compared with most industrial boilers and are typically regulated through State-level operating permits.

The potential impact from emergency generators and boilers on air quality would be expected to be small for all plants, and, given the infrequency and short duration of maintenance testing, it would not be an air quality concern even at those plants located in or adjacent to nonattainment areas. The locations of the currently designated nonattainment areas near nuclear plants are shown in Section 3.3.2.

As discussed in Section 3.3, cooling tower drift can increase downwind PM concentrations, impair visibility, ice roadways, cause drift deposition, and damage vegetation and painted surfaces. There are currently 24 licensed nuclear power plants that use wet cooling towers in closed-cycle cooling systems. Most of the plants use two or more towers for reactor heat removal. Of the 47 operating towers, 24 are natural draft cooling towers and 23 are mechanical draft cooling towers. There are currently no dry or hybrid (combinations incorporating elements of both dry and wet design) systems being used at operating nuclear plants. Only 1 of the 47 towers (a natural draft cooling tower at the Hope Creek plant in New Jersey) is operating at a plant that uses high-salinity water for cooling system makeup. A recent air quality impact analysis associated with emissions related to cooling tower drift droplets and PM for this worst-case situation found that the impacts of cooling tower operations on air quality were small, as summarized in Section 3.3.2.

Thus, although there is the potential for some air quality impacts to occur as a result of equipment and cooling tower operations, even in the worst-case situation (Hope Creek), the impacts would be considered small, at least in part because licensees would be required to operate within State permit requirements. On the basis of these considerations, the NRC concludes that the impact of continued operations during the license renewal term on air quality would be small for all plants, and would be a Category 1 issue.

Refurbishment Activities – Potential sources of impacts on air quality during refurbishment activities associated with continued operations during the license renewal term include (1) fugitive dust from site excavation and grading and (2) emissions from motorized equipment,

construction vehicles, and workers' vehicles. Some refurbishment activities would be performed on equipment inside existing buildings and would not generate air emissions.

With application of adequate controls or mitigation measures and best practices, the air quality impacts from these air pollution sources would be small and of relatively short duration. The disturbed area for refurbishment actions, if required, is expected to be 4 ha (10 ac) or less (see Section 4.2.1). During site excavation and grading, some PM in the form of fugitive dust would be released into the atmosphere. Because of the (1) small size of the disturbed area, (2) relatively short construction period, (3) availability of paved roadways at existing facilities, and (4) use of best management practices (such as watering, chemical stabilization, and seeding), fugitive dust resulting from these construction activities would likely be minimal.

Construction vehicles and other motorized equipment would generate exhaust emissions that include small amounts of CO, NO_x, VOCs, and PM. These emissions would be temporary (restricted to the construction period) and localized (occurring only in the immediate vicinity of construction areas). Emissions from construction equipment and vehicles (e.g., CO, hydrocarbons, and PM from use of diesel fuels) and from fugitive dust emissions from ground-clearing and grading activities could be small or moderate. For refurbishment occurring in geographical areas with poor or marginal air quality, the emissions generated from these activities could be cause for concern in a few cases (e.g., building demolition, debris removal, and new construction). However, the 1990 Clean Air Act Amendments include a provision that no Federal agency shall support any activity that does not conform to a State Implementation Plan designed to achieve the National Ambient Air Quality Standards (NAAQS) for criteria pollutants (sulfur dioxide [SO_2], nitrogen dioxide [NO_2], CO, ozone [O_3,], lead [Pb], PM_{10}, and PM with a mean aerodynamic diameter of 2.5 μm or less [$PM_{2.5}$]).

On November 30, 1993, the EPA issued its Final General Conformity Rule in the *Federal Register* (58 FR 63214) implementing the new requirements in the Clean Air Act, effective January 31, 1994. The regulations are codified in 40 CFR Part 51, Subpart W, and Part 93, Subpart B. The final rule requires Federal agencies to ensure that a proposed Federal action in air quality nonattainment or maintenance areas conforms to the applicable State Implementation Plan before the action is taken and to prepare a written conformity analysis and determination for each pollutant for which the total of direct and indirect emissions caused by a proposed Federal action would exceed established threshold emission levels in a nonattainment or maintenance area. An area is designated as nonattainment for a criteria pollutant if it does not meet NAAQS for the pollutant. A maintenance area is one that a State has redesignated from nonattainment to attainment. The current nationwide designations of nonattainment and maintenance areas are identified in Section 3.3.2, with county-specific maps of nuclear power plants shown in Section D.2 in Appendix D.

The EPA recommends that mobile emissions from construction vehicles and equipment should generally be considered as indirect emissions in a conformity analysis. Emissions from construction equipment and vehicles are expected to be small for anticipated refurbishment projects on the basis of activities that have occurred to date; however, larger projects may require a sizeable workforce that could contribute vehicle exhaust emissions that could exceed the *de minimis* thresholds for CO, NO_x, and VOCs (the latter two contribute to the formation of O_3) in nonattainment and maintenance areas. In addition, the amount of fugitive dust generated by dust resuspension from larger projects involving construction vehicle use onsite or vehicle use in the vicinity of construction activities may approach or exceed the threshold for PM_{10} in serious nonattainment areas (70 tons/yr). However, dust suppression measures could be implemented in areas of concern. In addition, the EPA suggests that there may be some flexibility in the rigor of a conformity analysis, particularly with regard to the specific site, extent of activities, pollutants that are in nonattainment, severity of the nonattainment, State regulatory agency involved, and the Federal agency's control over workers' vehicles. In summary, emissions from vehicle exhaust and fugitive dust could result in impacts, but a general conclusion about the significance of the potential impact cannot be drawn without considering the compliance status of each site and specific information about the activities expected during the license renewal term.

In the 1996 GEIS, the NRC concluded that the impacts from plant refurbishment associated with license renewal on air quality could range from small to large, although these impacts were expected to be small for most plants. Air quality impacts resulting from construction vehicle, equipment, and fugitive dust emissions could be small or moderate depending on project and plant-specific details. On the basis of these considerations, the NRC concludes that the impact of refurbishment activities on air quality during the license renewal term would be small for most plants, but could be moderate for plants located in or near air quality nonattainment or maintenance areas, depending on the nature of the planned activity. The impacts would be temporary and cease once projects were completed. Therefore, the impact on air quality from refurbishment activities remains a Category 2 issue.

Air Quality Effects on Transmission Lines

Small amounts of ozone and substantially smaller amounts of oxides of nitrogen are produced by transmission lines during corona, a phenomenon that occurs when air ionizes near isolated irregularities on the conductor surface such as abrasions, dust particles, raindrops, and insects. Several studies have quantified the amount of ozone generated and concluded that the amount produced by even the largest lines in operation (765 kV) is insignificant (SNYPSC 1978; Scott-Walton et al. 1979; Janes 1980; Varfalvy et al. 1985). Monitoring of ozone levels for two years near a Bonneville Power Administration 1200-kV prototype line revealed no increase in ambient ozone levels caused by the line (Bracken and Gabriel 1981; Lee et al. 1989). Ozone concentrations generated by transmission lines are therefore too low to cause any significant

effects. The minute amounts of oxides of nitrogen produced are similarly insignificant. A finding of small significance is supported by the evidence that production of ozone and oxides of nitrogen are insignificant and does not measurably contribute to ambient levels of those gases. Potential mitigation measures (e.g., burying transmission lines) would be very costly and would not be warranted. This is a Category 1 issue.

Impacts on crop production that may have been caused by transmission line interference with aerial spraying have been reported by one field study of cotton, rice, and soybean fields crossed by a 500-kV line in eastern Arkansas (Parsch and Norman 1986). This study hypothesized that crop yields could be reduced either by electromagnetic fields (EMFs) or by inadequate aerial spraying directly under the power lines. Only cotton yields were found to be reduced; 15 percent less lint was produced under the lines than 150 ft from the lines. The resulting loss of income from cotton was estimated as $85.25 per year for an 1100-ft (335-m) span of the lines, based on a 15 percent yield reduction and an average lint yield of 480 lb/acre. The field sampling and statistical analyses were extensive; the observed yield reduction appeared to be real rather than a sampling error. However, the study could not determine whether the EMF or line interference with aerial spraying caused the yield reduction.

4.3.1.2 Noise

One issue related to noise impacts during the license renewal term and refurbishment is considered in this section:

- Impacts of continued operations and refurbishment activities on noise. This issue was evaluated in the 1996 GEIS.

Noise from nuclear plant operations can often be detected offsite relatively close to the plant site boundary. Sources of noise and the relative magnitude of impacts during normal nuclear power plant operations are discussed in Section 3.3.3. Major sources of noise at an operating nuclear power plants are cooling towers, turbines, transformers, large pumps, and cooling water system motors. Nuclear plant operations have not changed appreciably with time, and no change in noise levels or noise-related impacts are expected during the license renewal term. Since no change is expected in the amount of noise generated during the license renewal term, the only issue of concern is the number of people now living close to the nuclear power plant who are exposed to operational noise.

Given the industrial nature of the power plant and the number of years of plant operation, noise from a nuclear plant is generally nothing more than a continuous minor nuisance. However, noise levels may sometimes exceed the 55 dBA level that the U.S. Environmental Protection Agency (EPA) uses as a threshold level to protect against excess noise during outdoor activities (EPA 1974). However, according to the EPA this threshold does “not constitute a

standard, specification, or regulation," but was intended to provide a basis for state and local governments establishing noise standards. Nevertheless, noise levels at the site boundary are expected to remain well below regulatory standards for offsite residents.

Noise would also be generated by construction-related activities and equipment used during refurbishment. However this noise would occur for relatively short periods of time (several weeks) and is not expected to be distinguishable from other operational noises at the site boundary nor create an adverse impact on rearby residents.

In the 1996 GEIS, the NRC concluded that noise was not a problem at operating plants and was not expected to be a problem at any nuclear plant during the license renewal term. The magnitude of noise impacts was therefore determined to be small for all plants, and the issue was designated as Category 1. No new information altering this conclusion has been identified in subsequent license renewal reviews.

On the basis of these considerations, the NRC concludes that the noise impact of continued nuclear plant operations during the license renewal term and refurbishment would be small for all plants, and remains a Category 1 issue.

4.3.2 Environmental Consequences of Alternatives to the Proposed Action

Construction –Air quality impacts would include criteria pollutants from construction vehicles and equipment and dust from land clearing and grading. VOCs could be released from organic solvents used in cleaning, during the application of protective coatings, and the onsite storage and use of petroleum-based fuels. Construction vehicles and equipment would also generate noise. Impacts, however, would be temporary, and both air quality and noise impacts would return to pre-construction levels after construction was completed.

Air quality and noise impacts from construction activities would be similar whether occurring at a greenfield site, brownfield site, or at an existing nuclear power plant. The impacts would be greatest, however, at a greenfield site because cleaner ambient air quality and noise conditions, even though greenfield sites may also be found in NAAQS nonattainment areas. Onsite concrete batch plants, if required, would also contribute to construction-related dust and noise.

Operations – Air quality would be affected during operations by cooling tower drift; auxiliary power equipment, building heating, ventilation, and air conditioning (HVAC) systems; and vehicle emissions. Auxiliary power equipment could include standby diesel generators and power systems for emergency power and auxiliary steam.

Ambient noise levels would be affected by cooling towers (water pumps, cascading water, or fans), transformers, turbines, pumps, compressors, loudspeakers, other auxiliary equipment such as standby generators, and vehicles. Air quality and noise impacts would be the greatest at greenfield sites.

4.3.2.1 Fossil Energy Alternatives

Construction – Air quality and noise impacts would be the same as described in Section 4.3.2. The impact analysis for fossil energy alternatives is based on projected impacts of facilities studied by the U.S. Department of Energy's (DOE's) National Energy Technology Laboratory (NETL). Baseline performance and cost data for 12 technologies are presented in a report issued by NETL (NETL 2007).

An independent study conducted by the U.S. Environmental Protection Agency (EPA) on some of the technologies in the NETL report provides additional environmental impact data (EPA 2006). However, due to different power plant designs and fuel used in the NETL and EPA studies the data are not directly comparable. Nevertheless, data from both studies are presented to provide a range of environmental impacts. Most of the data presented in the following sections are extracted from those two reports.

Operations – Fossil fuel power plants without pollution-control devices can have a significant impact on air quality. The burning of fossil fuels is a major source of criteria pollutants and greenhouse gases, primarily CO_2, as well as other hazardous air pollutants. The exact nature of these pollutants depends on the chemical constituency of the fuel, combustion technology, air pollution control devices, and onsite management of fuel (e.g., coal) and waste material. Sources of noise include coal delivery, coal crushing, and fuel and waste handling activities.

The EPA has identified 13 trace elements likely to be emitted from an integrated gasification combined cycle (IGCC) facility, including arsenic, cadmium, lead, mercury, and selenium. The average concentrations of trace elements emitted in pounds emitted per million Btu input (lb/10^6 Btu) are as follows: antimony (4), arsenic (2.1), beryllium (0.09), cadmium (2.9), chloride (740), chromium (2.7), cobalt (0.57), fluoride (38), lead (2.9), manganese (3.1), mercury (1.7), nickel (3.9), and selenium (2.9) (EPA 2006).

Table 4.3.2.1–1 displays some of the anticipated air quality impacts of coal-burning technologies (EPA 2006). Table 4.3.2.1-2 shows projected emissions of criteria and hazardous air pollutants from fossil fuel plants (NETL 2007). The values presented in the two tables represent the possible range of operational emissions that could result from fossil-fuel-fired power plants.

Fossil fueled power plants not equipped with carbon capture and storage devices will emit large amounts of CO_2 and lesser amounts of other greenhouse gases. EPA projections of CO_2 emissions from a 500-MW integrated gasification combined cycle facility burning bituminous, sub-bituminous, and lignite coals are 1441 lb/MWh (or 199 lb/MMBtu), 1541 lb/MWh (208 lb/MMBtu), and 1584 lb/MWh (211 lb/MMBtu), respectively (EPA 2006). However, as can be seen from the data presented in Table 4.3.2.1-2, CO_2 emissions can be reduced by as much as 90 percent with the installation of carbon capture and storage devices.

4.3.2.2 New Nuclear Alternatives

Construction – Air quality and noise impacts for the construction of a new nuclear power plant would be the same as described in Section 4.3.2.

Operations – An operating nuclear plant would have minor air emissions associated with diesel generators and other small-scale intermittent sources. Air quality and noise impacts would be the same as described in Section 4.3.2.

4.3.2.3 Renewable Alternatives

Construction – Air quality and noise impacts for the construction of land-based alternative energy technologies would be the same as described in Section 4.3.2. Air quality impacts associated with the construction of offshore power generating facilities and support structures include the emission of criteria pollutants from construction barges and equipment (e.g., cranes, compressors) and vehicles delivering materials and crews to embarkation locations on the shore, and dust from the construction of onshore facilities (e.g., cable landings, substations).

Table 4.3.2.1–1. Projected Air Quality Impacts for Selected Power Production Technologies Burning Various Ranks of Coal[(a)]

		Projected Air Quality Impacts (lb/MWh)							SO_2 Removal Percent	NO_x Removal Basis[(f)]
Fuel	Technology[(b)]	NO_x (NO_2)	SO_2	CO	Particulate[(c)]	VOCs	Lead[(d)]	Mercury[(e)]		
Bituminous coal	IGCC	0.355	0.311	0.217	0.051	–	1.0×10^{-6} to 2.4×10^{-6}	5.50×10^{-6}	99	15 ppmvd @ 15 percent O_2
	Subcritical PC	0.528	0.757	0.880	0.106	0.021	3.40×10^{-5} to 18×10^{-5}	6.69×10^{-6}	98	0.06 lb/MMBtu
	Supercritical PC	0.494	0.709	0.824	0.099	0.020	3.18×10^{-5} to 17×10^{-5}	6.26×10^{-6}	98	0.06 lb/MMBtu
	Ultra-Supercritical PC	0.442	0.634	0.737	0.088	0.018	2.84×10^{-5} to 15×10^{-5}	5.6×10^{-6}	98	0.06 lb/MMBtu
Sub-bituminous coal	IGCC	0.326	0.089	0.222	0.052	–	1.0×10^{-6} to 2.4×10^{-6}	3.11×10^{-6}	97.5	15 ppmvd @ 15 percent O_2
	Subcritical PC	0.543	0.589	0.906	0.109	0.025	18×10^{-5} to 23×10^{-5}	3.80×10^{-6}	87[(g)]	0.06 lb/MMBtu
	Supercritical PC	0.500	0.541	0.832	0.100	0.023	16.6×10^{-5} to 21×10^{-5}	3.49×10^{-6}	87[(g)]	0.06 lb/MMBtu
	Ultra-supercritical PC	0.450	0.488	0.750	0.090	0.020	15×10^{-5} to 19×10^{-5}	3.15×10^{-6}	87[(g)]	0.06 lb/MMBtu
Lignite coal	IGCC	0.375	0.150	0.225	0.053	–	1.0×10^{-6} to 2.4×10^{-6}	5.48×10^{-6}	99	15 ppmvd @ 15 percent O_2
	Subcritical PC	0.568	0.814	0.947	0.114	0.026	18.9×10^{-5} to 24×10^{-5}	6.9×10^{-6}	95.8	0.06 lb/MMBtu
	Supercritical PC	0.524	0.751	0.873	0.105	0.024	17.5×10^{-5} to 22×10^{-5}	6.37×10^{-6}	95.8	0.06 lb/MMBtu
	Ultra-supercritical PC	0.498	0.714	0.830	0.100	0.022	16.6×10^{-5} to 21×10^{-5}	6.06×10^{-6}	95.8	0.06 lb/MMBtu

Footnotes on next page.

Table 4.3.2.1–1. (cont.)

IGCC = integrated gasification combined cycle.

(a) Proximate analyses values (weight percent) for bituminous/sub-bituminous/lignite study coals include: weight percent ash 9.70/4.50/17.92; moisture 11.12/27.40/31.24; fixed carbon 44.19/36.70/22.96; volatiles 34.99/31.40/28.08. Higher heating values (btu/lb) for study coals are: 11,667/8,800/6,312.

(b) None of the technologies represented in this table is equipped with carbon capture and storage (CCS) capability. The EPA study (EPA 2006) on which data in this table are based included only coal combustion technologies.

(c) Particulate removal is 99.9 percent or greater for IGCC cases and 99.8 percent for bituminous coal, 99.7 percent for sub-bituminous coal, and 99.9 percent for lignite coal in the pulverized coal (PC) cases. Particulate matter emission rates shown include the overall filterable particulate matter only.

(d) Little empirical evidence exists on the behavior of lead in IGCC facilities. The EPA anticipates that approximately 5 percent of the lead in the input coal will be emitted to the air, while the remaining lead will remain with gasifier slag and other solid wastes generated in other gas cleaning units.

(e) As with lead, the behavior of mercury in IGCC systems is not well understood. It is anticipated that as much as 60 percent of coal-derived mercury will be potentially emitted to the atmosphere; however, fabric filters and scrubbers installed for particulate and SO_2 controls may effectively capture as much as 98 percent of the mercury present in exhaust gases. With the advent of mercury emission regulations and the installation of other devices specifically designed to capture mercury, the EPA expects that a larger fraction of mercury contained in the coal will ultimately be found in solid wastes generated in those mercury capture devices.

(f) A percent removal for NO_x cannot be calculated with a basis (i.e., an uncontrolled unit), for comparison. Also, the PC and IGCC technologies use multiple technologies (e.g., combustion controls, selective catalytic reduction [SCR]) to control NO_x. NO_x emission comparisons are based on emission levels expressed in parts per million volume (dry basis) (ppmvd) at 15 percent oxygen for IGCC and lb/MMBtu for PC cases.

(g) A relatively low SO_2 removal efficiency of 87 percent results from a relatively low sulfur content in sub-bituminous coal of only 0.22 percent. Higher removal efficiencies occur with higher sulfur-content coals.

Source: EPA 2006

Table 4.3.2.1-2. Performance and Cost Data for Fossil-Fuel-Fired Power Plants That Are Likely Alternatives to Retired Nuclear Reactors

Parameter	Integrated Gasification Combined Cycle					
	General Electric Energy		ConocoPhillips		Shell	
CO_2 capture	No	Yes	No	Yes	No	Yes
Gross power output (kWe)	770,350	744,960	742,510	693,840	748,020	693,555
Auxiliary power requirement (kWe)	130,100	189,285	119,140	175,600	112,170	176,420
Net power output (kWe)	640,250	555,675	623,370	518,240	635,850	517,135
Coal flow rate (lb/hr)	489,634	500,379	463,889	477,855	452,620	473,176
Natural gas flow rate (lb/hr)	NA[(a)]	NA	NA	NA	NA	NA
Higher heating value (HHV) thermal input (kWe)	1,674,044	1,710,780	1,685,023	1,633,771	1,547,493	1,617,772
Net plant HHV efficiency (percent)	38.2	32.5	39.3	31.7	41.1	32.0
Net plant HHV heat rate (Btu/kWh)	8,922	10,505	8,681	10,757	8,304	10,674
CO_2 emissions (lb/hr)	1,123,781	114,476	1,078,144	131,328	1,054,221	103,041
CO_2 emissions (tons/yr) @ CF[(b)]	3,937,728	401,124	3,777,815	460,175	3,693,990	361,056
CO_2 emissions (lb/MMBtu)	197	19.6	199	23.6	200	18.7
CO_2 emissions (kg/MWh)[(b)]	662	69.7	659	85.9	639	67.4
CO_2 emissions (lb/MWh)[(b)]	1,469	154	1,452	189	1,409	149
CO_2 emissions (lb/MWh)[(c)]	1,755	206	1,730	253	1,658	199
SO_2 emissions (lb/hr)	73	56	68	48	66	58
SO_2 emissions (tons/yr) @ CF[(b)]	254	196	237	167	230	204
SO_2 emissions (lb/MMBtu)	0.012	0.0096	0.0125	0.0085	0.0124	0.0105
SO_2 emissions (kg/MWh)[(c)]	0.0427	0.0341	0.0413	0.0311	0.0398	0.0380
SO_2 emissions (lb/MWh)[(c)]	0.0942	0.0751	0.0909	0.0686	0.0878	0.0837
NO_x emissions (lb/hr)	313	273	321	277	309	269
NO_x emissions (tons/yr) @ CF[(b)]	1,096	955	1,126	972	1,082	944
NO_x emissions (lb/MMBtu)	0.055	0.047	0.059	0.050	0.058	0.049
NO_x emissions (kg/MWh)[(c)]	0.184	0.166	0.196	0.181	0.187	0.176
NO_x emissions (lb/MWh)[(c)]	0.406	0.366	0.433	0.400	0.413	0.388
PM emissions (lb/hr)	41	41	38	40	37	39
PM emissions (tons/yr) @ CF[(b)]	142	145	135	139	131	137
PM emissions (lb/MMBtu)	0.0071	0.0071	0.0071	0.0071	0.0071	0.0071
PM emissions (kg/MWh)[(c)]	0.024	0.025	0.023	0.026	0.023	0.026
PM emissions (lb/MWh)[(c)]	0.053	0.056	0.052	0.057	0.050	0.057
Hg emissions (lb/hr)	0.0033	0.0033	0.0031	0.0032	0.0030	0.0032
Hg emissions (tons/yr) @ CF[(b)]	0.011	0.012	0.011	0.011	0.011	0.011
Hg emissions (lb/MMBtu)	0.571	0.571	0.571	0.571	0.571	0.571
Hg emissions (kg/MWh)[(b)]	1.92E-06	2.03E-06	1.89E-06	2.08E-06	1.83E-06	2.08E-06
Hg emissions (lb/MWh)[(b)]	4.24E-06	4.48E-06	4.16E-06	4.59E-06	4.03E-06	4.55E-06

Table 4.3.2.1-2. (cont.)

Parameter	Pulverized Coal Boiler				NGCC	
	PC Subcritical		PC Supercritical		Advanced F Class	
CO_2 capture	No	Yes	No	Yes	No	Yes
Gross power output (kWe)	583,315	679,923	580,260	663,445	570,200	520,090
Auxiliary power requirement (kWe)	32,870	130,310	30,110	117,450	9,840	38,200
Net power output (kWe)	550,445	549,613	550,150	545,995	560,360	481,890
Coal flow rate (lb/hr)	437,699	646,589	411,282	586,627	NA	NA
Natural gas flow rate (lb/hr)	NA	NA	NA	NA	165,182	165,182
HHV thermal input (kWe)	1,496,479	2,210,668	1,406,161	2,005,660	1,103,363	1,103,363
Net plant HHV efficiency (%)	36.8%	24.9%	39.1%	27.2%	50.8%	43.7%
Net plant HHV heat rate (Btu/kWh)	9,276	13,724	8,721	12,534	6,719	7,813
CO_2 emissions (lb/hr)	1,038,110	152,975	975,370	138,681	446,339	44,634
CO_2 emissions (tons/yr) @ CF[(b)]	3,864,884	569,524	3,631,301	516,310	1,661,720	166,172
CO_2 emissions (lb/MMBtu)	203	20.3	203	20.3	119	11.9
CO_2 emissions (kg/MWh)[(c)]	807	102	762	94.8	355	38.9
CO_2 emissions (lb/MWh)[(c)]	1,780	225	1,681	209	783	85.8
CO_2 emissions (lb/MWh)[(d)]	1,886	278	1,773	254	797	93
SO_2 emissions (lb/hr)	433	Negligible	407	Negligible	Negligible	Negligible
SO_2 emissions (tons/yr) @ CF[(b)]	1,613	Negligible	1,514	Negligible	Negligible	Negligible
SO_2 emissions (lb/MMBtu)	0.0848	Negligible	0.0847	Negligible	Negligible	Negligible
SO_2 emissions (kg/MWh)[(c)]	0.3369	Negligible	0.3179	Negligible	Negligible	Negligible
SO_2 emissions (lb/MWh)[(c)]	0.7426	Negligible	0.7007	Negligible	Negligible	Negligible
NO_x emissions (lb/hr)	357	528	336	479	34	34
NO_x emissions (tons/yr) @ CF[(b)]	1,331	1,966	1,250	1,784	127	127
NO_x emissions (lb/MMBtu)	0.070	0.070	0.070	0.070	0.009	0.009
NO_x emissions (kg/MWh)[(c)]	0.278	0.352	0.263	0.328	0.027	0.030
NO_x emissions (lb/MWh)[(c)]	0.613	0.777	0.579	0.722	0.060	0.066
PM emissions (lb/hr)	66	98	62	89	Negligible	Negligible
PM emissions (tons/yr) @ CF[(b)]	247	365	232	331	Negligible	Negligible
PM emissions (lb/MMBtu)	0.0130	0.0130	0.0130	0.0130	Negligible	Negligible
PM emissions (kg/MWh)[(c)]	0.052	0.065	0.049	0.061	Negligible	Negligible
PM emissions (lb/MWh)[(c)]	0.114	0.144	0.107	0.134	Negligible	Negligible
Hg emissions (lb/hr)	0.0058	0.0086	0.0055	0.0078	Negligible	Negligible
Hg emissions (tons/yr) @ CF[(b)]	0.022	0.032	0.020	0.029	Negligible	Negligible
Hg emissions (lb/MMBtu)	1.14	1.14	1.14	1.14	Negligible	Negligible
Hg emissions (kg/MWh)[(c)]	4.54E-06	5.75E-06	4.29E-06	5.35E-06	Negligible	Negligible
Hg emissions (lb/MWh)[(c)]	1.00E-05	1.27E-05	9.45E-06	1.18E-05	Negligible	Negligible

(a) NA = not applicable.
(b) Capacity factor (CF) is 80% for IGCC cases and 85% for PC and NGCC cases.
(c) Value is based on gross output.
(d) Value is based on net output.
Source: NETL 2007a

Construction-related noise impacts would be substantially different offshore than those associated with onshore construction since these activities would be distant from most human receptors and because noise propagates much greater distances in water. Marine animals that use noise for navigation (e.g., echolocation) would be affected by construction-related noise.

Sources of noise would include crew vessels and construction and equipment barges; seismic technologies used to characterize the site; explosives or pile driving to construct foundations for offshore wind turbines or anchoring devices for wave, tidal, and current energy capturing equipment; and excavation of sea bottoms for installation of buried power and communication cables. Construction-related impacts on air quality and noise would generally be temporary.

Operations – The operational impacts of alternative energy technologies on air quality and noise are presented in the following subsections.

Hydroelectric Energy Sources

Air quality would be affected by minor emissions of criteria pollutants during plant operations, primarily from workforce vehicles and internal combustion engines on pumps, air compressors, emergency power generators, and other support equipment.

Geothermal

Air quality would be affected by the release of criteria pollutants from vehicles and equipment utilizing internal combustion engines. Air quality would be affected by the release of dissolved hydrogen sulfide from geothermal fluids during well operation; installation of hydrogen sulfide control/capture devices on wellheads would be required to regulate release to acceptable levels. Air quality would be affected by the release of greenhouse gases, estimated to be 1570 lb/hr of greenhouse gases (carbon dioxide 92.3 percent, methane 0.1 percent) during operation. Greenhouse gas emission rate is approximately 26 times less than the rate of release from a fossil fuel-fired power plant. Air quality could also be affected by the release of small amounts of acid rain precursors (NO_x, SO_2).

During winter months, air quality and visibility would be affected by ground-level fogging/icing that could occur from cooling towers. Ambient noise levels would be affected by cooling towers, compressors, and internal combustion engines and manipulation of fluids under high pressure. Noise could be as much as 45 dB above background at offsite locations.

Wind

Wind farms would have no discernible impacts on air quality. Noise impacts would include aerodynamic noise from the turbine rotor and mechanical noise from turbine drivetrain components.

Noise from offshore wind farms consisting of aerodynamic and mechanical noise from the wind turbine transmitted underwater via the tower could affect marine species, especially those that use echolocation to navigate. Onshore components of offshore wind facilities would affect land animals when located at or near important habitats. Because of water density, noise travels proportionally greater distances under water; thus, the area over which noise impacts may occur would be much greater for offshore wind farms

Biomass

Air impacts would result from feedstock handling activities (storage, crushing/grinding, loading conveyors, etc.) and combustion. Combustion of biomass generally results in smaller amounts of greenhouse gas (primarily CO_2) than combustion of fossil fuel. For some biomass sources such as energy crops, the amount of CO_2 released during their combustion is roughly equivalent to the amount absorbed by the plants during their growing cycle. Except for greenhouse gas emissions of vehicles and equipment used to plant, cultivate, and harvest, energy crops are considered to be greenhouse gas-neutral with respect to their application in electrical energy production. Conversion to energy of biomass that would otherwise be managed as a solid waste represents a net greenhouse gas "sink" since combustion for energy production avoids the greenhouse gas emissions (primarily methane) that would have resulted from the landfilling and decomposition of such materials. Example criteria pollutant impacts (in lb/MWh) include:

SO_x	Wood waste burned in stoker boiler	0.08
	Fluidized bed combustion	0.08
	Energy crops combusted in IGCC system	0.05
NO_x	Wood waste burned in stoker boiler	2.1
	Fluidized bed combustion	0.9
	Energy crops combusted in IGCC system	2.2
CO	Wood waste burned in stoker boiler	12.2
	Fluidized bed combustion	0.17
	Energy crops combusted in IGCC system	0.23
PM_{10}	Wood waste burned in stoker boiler	0.50
	Fluidized bed combustion	0.3
	Energy crops combusted in IGCC system	0.01

(NREL 2003).

A 200-MW cofiring wood biomass coal facility (where biomass is 15 percent of the total heat input) operating in 2030 with an 80 percent capacity factor providing 771 GWh/yr electricity would have the following air emissions:

SO_2 36,200 MT/yr (40,544 T/yr)

CO_2 2,900,200 MT/yr (3,248,224 T/yr)

(EERE 1997).

Noise impacts from biomass combustion facilities would be similar in nature and magnitude to coal-fired plants of equivalent size and capacity.

Municipal Solid Waste, Refuse-Derived Fuel and Landfill Gas

Air impacts from combustion of refuse-derived fuel would be dependent on the quality of the fuel. Criteria and hazardous air pollutants could be released if not removed during refuse-derived fuel production. Air pollutants of concern include hydrochloric acid, NO, sulfuric acid, arsenic, cadmium, chromium (VI), dioxins/furans, various PAHs, chlorinated benzenes, dienes, phenols, and PCBs. Air quality could be affected by the release of dioxins and other PAHs from the incomplete combustion of fuel. Noise impacts from municipal solid waste, refuse-derived fuel, and landfill gas combustion facilities would be similar in nature and intensity to coal-fired and natural gas-fired power plants. Noise sources would include municipal solid waste feedstock preparation activities (cutting grinding, etc., to produce a feedstock of uniform size) and pump and compressor noise from the collection and transfer of landfill gas.

Solar Thermal

Dust could be released due to the removal of vegetation. Noise during operations would include mechanical noise from operation of powerblock components (steam cycle and cooling system pumps, turbines, and generators), and pump noise from circulation of heat transfer fluids, cooling tower noise (fans, cascading water).

Solar Photovoltaic

Dust could be released from the plant site due to the removal of vegetation. Individual photovoltaic cells could release toxic heavy metals to the atmosphere (primarily cadmium, selenium, and arsenic) in the event of fire. Virtually no discernible noise or air quality impacts would result from the routine operation of the facility.

Ocean Wave and Current

Air quality would be only minimally affected by facility operation; air quality would be affected by the release of criteria pollutants during periodic inspection, maintenance, and repair; vessels are expected to burn low-sulfur diesel fuel. Onshore air quality would be affected by the release of criteria pollutants from workforce vehicles and the possible release of fugitive dust from onshore support facilities. Mechanical noise from moving parts and hydrodynamic noise from the interaction of turbine blades with water would minimally affect the ambient above-water noise environment; underwater noise sources (primarily turbine blades, mechanical noise from other moving parts, and vessel propellers) could travel great distances and could affect marine organisms, especially those utilizing echolocation.

4.4 Geology and Soils

4.4.1 Environmental Consequences of the Proposed Action – Continued Operations and Refurbishment Activities

The impacts on geology and soils during the license renewal term were not considered in the 1996 GEIS. Geology and soils conditions at all nuclear power plants and associated transmission lines have been well established during the current licensing term. These conditions are expected to remain unchanged during the 20-year license renewal term.

The impact of continued operations and refurbishment activities during the license renewal term on geologic and soil resources would consist of soil disturbance for projects, such as replacing or additing buildings, roads, parking lots, and belowground and aboveground utility structures. Implementing best management practices would reduce soil erosion and subsequent impacts on surface water quality. These practices include, but are not limited to, minimizing the amount of disturbed land, stockpiling topsoil before ground disturbance, mulching and seeding in disturbed areas, covering loose materials with geotextiles, using silt fences to reduce sediment loading to surface water, using check dams to minimize the erosive power of drainages, and installing proper culvert outlets to direct flows in streams or drainages. Detailed geotechnical analyses would be required to address the stability of slope cuts in the creation of roads or other refurbishment-related construction projects. Depending on the plant location and design, riverbank or coastline protection might need to be upgraded, especially at water intake or discharge structures, if natural flows, such as storm surges, cause an increase in erosion. In addition, the Farmland Protection Policy Act requires Federal agencies to take into account agency actions affecting the preservation of farmland.

As discussed in Section 3.4, nuclear power plants are constructed according to seismic specifications in 10 CFR Part 50, Appendix S. Spent fuel pools are designed with reinforced concrete, allowing them to remain operable through the largest earthquake that has occurred or is expected to occur in the vicinity of a nuclear power plant.

Plant-specific environmental reviews conducted by the NRC have not identified any significant impact issues related to gology and soils. Consequently, the impact of continued operations and refurbishment activities would be small for all nuclear plants and a Category 1 issue.

4.4.2 Environmental Consequences of Alternatives to the Proposed Action

Construction – Land would be cleared of vegetation during construction. Soils would be stored onsite for redistribution at the end of construction. Land clearing during construction and the

installation of power plant structures and impervious pavements would alter surface drainage. Natural drainage patterns at brownfield sites have been previously altered.

Operation – No additional impacts on geology and soils are anticipated beyond those occurring during construction.

4.4.2.1 Renewable Alternatives

Operations – The operational impacts of alternative energy technologies on geology and soils are presented in the following subsections.

Hydroelectric Energy Sources

Geology and soils in the immediate area of a dam and reservoir would be affected by sedimentation in the reservoir basin and changes in upstream and downstream erosion patterns. Dams would induce downstream impacts such as low and high flow conditions, changes in sediment transport and deposition patterns, and channel erosion or scouring.

Geothermal

The power plant could be affected by earthquakes or volcanic activity in the seismically active area in which the geothermal resource is located. The injection of cooled geothermal fluids might induce microseismic activity. The removal of large quantities of groundwater and geothermal fluids could result in land subsidence.

Biomass

Soils would be affected by contaminants potentially present in runoff from unprotected piles of feedstock materials, fly ash and bottom ash, and scrubber sludge. Farming could result in soil erosion and the release of pesticides and fertilizers to nearby water bodies or to shallow groundwater aquifers.

Solar Thermal and Photovoltaic

This alternative requires a large amount of land. To avoid a fire hazard, solar collection devices would need to be kept free of vegetation. This practice could result in soil erosion in cleared areas by wind and precipitation runoff.

4.5 Hydrology

Hydrologic conditions at all nuclear power plants and associated transmission lines have been well established during the current licensing term. However, continued operations and refurbishment activities could have an impact on water resources during the license renewal term. This section describes the potential impact of these activities on surface water and groundwater resources.

4.5.1 Environmental Consequences of the Proposed Action – Continued Operations and Refurbishment Activities

Continued operations and refurbishment activities during the license renewal term could affect surface water and groundwater resources in a manner similar to what has occurred during the current license term (see Sections 3.5.1 and 3.5.2, respectively).

4.5.1.1 Surface Water

For the most part, no significant surface water impacts are anticipated during the license renewal term that would be different from those occurring during the current license term. Certain operational changes (such as a power uprate) affecting surface water would be evaluated by the NRC in a separate environmental assessment. For potential impacts to water resources, the use of surface water is of greatest concern because of the high volumetric flow rates required for condenser cooling at power plants. Withdrawals from surface water bodies are high for both once-through and closed-cycle cooling systems. Consumptive water use occurs through evaporation and drift, especially from cooling towers, and may affect water availability downstream of plants along rivers. Associated impacts on surface water quality may result from the discharge of thermal effluent containing chemical additives. Other potential impacts on surface water are the result of normal industrial plant activities during the license renewal term.

The following issues concern impacts on surface water that may occur during the license renewal term:

- Impacts of continued operations and refurbishment activities on surface water use and quality (combination of two issues evaluated in the 1996 GEIS: (1) impacts of refurbishment on surface water quality and (2) impacts of refurbishment on surface water use);

- Altered current patterns at intake and discharge structures (evaluated in the 1996 GEIS);

- Altered salinity gradients (evaluated in the 1996 GEIS);
- Altered thermal stratification of lakes (evaluated in the 1996 GEIS);
- Scouring caused by discharged cooling water (evaluated in the 1996 GEIS);
- Discharge of metals in cooling system effluent (evaluated in the 1996 GEIS);
- Discharge of biocides, sanitary wastes, and minor chemical spills (combination of two issues evaluated in the 1996 GEIS: (1) discharge of chlorine or other biocides and (2) discharge of sanitary wastes and minor chemical spills);
- Water use conflicts for plants with once-through cooling systems (evaluated in the 1996 GEIS);
- Water use conflicts for plants with cooling ponds or cooling towers using makeup water from a river with low flow (evaluated in the 1996 GEIS);
- Effects of dredging on water quality (new issue not considered in the 1996 GEIS); and
- Temperature effects on sediment transport capacity (evaluated in the 1996 GEIS).

Impacts of Continued Operations and Refurbishment on Surface Water Use and Quality

This issue is a combination of two 1996 GEIS issues (impacts of refurbishment on surface water quality and impacts of refurbishment on surface water use). Continued operations and refurbishment activities could result in soil erosion and spills of hydrocarbon fuels, paints, or other chemicals which may affect the quality of receiving waters. Because best management practices (e.g., minimizing the amount of disturbed land, mulching and seeding in disturbed areas, using silt fences to reduce sediment loading to surface water, using check dams and installing proper culvert outlets to minimize the erosive power of drainages) are expected to be followed during such activities, soil erosion would be minimized. Implementation of spill prevention and control plans would reduce the likelihood of any liquid chemical spills.

Water is used during refurbishment activities for concrete production or dust control; however, the volume used would be insignificant when compared with that used by the cooling system. Depending on site factors, the facility might opt to use groundwater for refurbishment purposes. In addition, if the refurbishment took place during a reactor shutdown, the overall water use by the facility would be greatly reduced.

The impacts of continued operations and refurbishment on surface water use and quality during the license renewal term were considered to be small for all plants and were designated as Category 1 issues in the 1996 GEIS. No new information in plant-specific SEISs or associated literature has been identified that would change this conclusion. On the basis of these considerations, the impact of continued operations and refurbishment activities on surface water resources would be small for all nuclear plants and remains a Category 1 issue.

Altered Current Patterns at Intake and Discharge Structures

The large flow rates associated with cooling system water use have the potential to alter current patterns. The degree of influence depends on the design and location of the intake and discharge structures and the characteristics of the surface water body. The effect on currents near the intake and discharge locations is expected to be localized, and any problems would have been mitigated during the early operational period of a plant (NRC 1996). Most nuclear power plants are sited on large bodies of water to make use of the water for cooling purposes. The size of large rivers, lakes, or reservoirs precludes significant current alterations except in the vicinity of the structures. For ocean shore or bay settings, the effect is further reduced when compared with the strong natural water movement patterns. For example, current patterns have been modified at the Oyster Creek plant, which is located inland from Barnegat Bay in New Jersey. The once-through cooling system for this plant was created by modifying two small rivers originally flowing parallel into the bay. On the north side of the plant, the South Branch of the Forked River was enlarged between the plant and the bay to serve as an intake canal. On the south side of the plant, Oyster Creek was enlarged between the plant and the bay for use as a discharge canal. Near the plant, the two waterways were joined. Bay water is pulled from the bay through the intake canal to the plant, against the original flow direction of the lowest reach of the South Branch of the Forked River. Flow at the mouth of this river is therefore both reversed and significantly increased, while flow at the mouth of the Oyster Creek discharge canal is significantly increased. While current patterns in Barnegat Bay in the immediate vicinity of the intake and discharge canals are affected by operations, the effect is minor on the overall Barnegat Bay system (NRC 1996, 2007b).

This issue has no relevance to plants relying on cooling ponds because they are man-made features without natural currents.

Impacts from altered current patterns at intake and discharge structures during the license renewal term were considered to be small for all plants and were designated as a Category 1 issue in the 1996 GEIS. No new information has been identified in plant-specific SEISs or associated literature that would change this conclusion. On the basis of these considerations, the impact of altered current patterns at intake and discharge structures would be small for all nuclear plants and remains a Category 1 issue.

Altered Salinity Gradients

This issue relates to plants located on estuaries and addresses changes in salinity caused by cooling system water withdrawals and discharges. Using the same example site as for the current patterns issue, the Oyster Creek plant's construction included modification of the lower reaches of two creeks. These portions of the creeks were originally brackish, with a mix of freshwater from their upper reaches and tidally influenced bay water. Because of the cooling system operations, the water quality of these lower reaches now essentially matches that of Barnegat Bay, with contributions of freshwater from their upper reaches being relatively minor. These lower reaches are also affected by occasional dredging activities, and the discharge canal receives water to which heat and chemicals have been added. The salinity changes do not affect the upper portions of these streams. In the 1996 GEIS, only minor effects had been noted in Barnegat Bay.

In the 1996 GEIS and Clavert Cliffs SEIS (NRC 1999b), the Calvert Cliffs plant on the Chesapeake Bay, has not had important effects on bay salinity. Altered salinity gradients are expected to be noticeable only in the immediate vicinity of intake and discharge structures.

Impacts from altered salinity gradients at intake and discharge structures during the license renewal term were considered to be small for all plants and were designated as Category 1 issues in the 1996 GEIS. No new information has been identified in plant-specific SEISs or associated literature that would alter this conclusion. On the basis of these considerations, the impact of altered salinity gradients would be small for all nuclear plants and remains a Category 1 issue.

Altered Thermal Stratification of Lakes

Because cooling systems typically withdraw from the deeper, cooler portion of the water column of lakes or reservoirs and discharge to the surface, they have the ability to alter the thermal stratification of the surface water. This is not considered an issue for rivers or oceans because of mixing caused by natural turbulence.

A thermal plume of discharge water loses heat to the atmosphere and to the receiving surface water body. It also undergoes mixing with the surface water. In the 1996 GEIS, examples included the Oconee plant in South Carolina, where the withdrawal of cool, deep water for cooling purposes favors warmwater fish species at the expense of coolwater fish. Mitigation of this effect is possible by modifying the allowable discharge water temperature. In an example from the McGuire power plant in North Carolina, a modeling study indicated that increasing the permitted discharge temperature would reduce the withdrawal of cool, deep water and conserve coolwater species habitat.

Thermal plumes may be studied through field measurements and modeling studies. For plants on lakes or reservoirs, the thermal effect on stratification is examined periodically through the National Pollutant Discharge Elimination System (NPDES) permit renewal process. Problems with thermal stratification due to nuclear power plant operations have not been encountered.

Impacts from altered thermal stratification of lakes and reservoirs during the license renewal term were considered to be small for all plants and were designated as Category 1 issues in the 1996 GEIS. No new information has been identified in plant-specific SEISs or associated literature that would alter this conclusion. On the basis of these considerations, the impact of altered thermal stratification of lakes would be small for all nuclear plants and remains a Category 1 issue.

Scouring Caused by Discharged Cooling Water

The high flow rate of water from a cooling system discharge structure has the potential to scour sediments and redeposit them elsewhere. The scouring will remove fine-grained sediments, resulting in turbidity, and leave behind coarse-grained sediments.

The degree of scouring depends on the design of the discharge structure and the character of the sediments. Scouring is expected to occur only in the vicinity of the discharge structure where flow rates are high. While scouring is possible during reactor startup, operational periods would typically have negligible scouring. Natural sediment transport processes could bring fresh sediment into the discharge flow area. These processes include transport due to ocean currents, tides, river meandering, and storm events.

In the 1996 GEIS, scouring had not been noted as a problem at most plants and had been observed at only three nuclear power plants (Calvert Cliffs, Connecticut Yankee [no longer operating], and San Onofre). The effects at these plants were localized and minor.

Impacts from scouring caused by discharged cooling water during the license renewal term were considered to be small for all plants and were designated as a Category 1 issue in the 1996 GEIS. No new information has been identified in plant-specific SEISs or associated literature that would alter this conclusion. On the basis of these considerations, the impact of scouring caused by discharged cooling water is small for all nuclear plants and remains a Category 1 issue.

Discharge of Metals in Cooling System Effluent

Heavy metals such as copper, zinc, and chromium can be leached from condenser tubing and other components of the heat exchange system by circulating cooling water. These metals are normally addressed in NPDES permits because high concentrations of them can be toxic to

aquatic organisms. During normal operations, concentrations are normally below laboratory detection levels. However, plants occasionally undergo planned outages for refueling, with stagnant water remaining in the heat exchange system. During an outage at the Diablo Canyon plant in California, the longer residence time of water in the cooling system resulted in elevated copper levels in the discharge when operations resumed; abalone (*Haliotis spp.*) deaths were attributed to the increased copper (NRC 1996). At the Robinson plant in South Carolina, the gradual accumulation of copper in its reservoir resulted in impacts on the bluegill (*Lepomis macrochirus*) population. In both cases, copper condenser tubes were replaced with titanium ones, and the problem was eliminated (NRC 1996).

Impacts from the discharge of metals in cooling system effluent during the license renewal term were considered to be small for all plants and were designated as a Category 1 issue in the 1996 GEIS. No new information has been identified in plant-specific SEISs or associated literature that would alter this conclusion. On the basis of these considerations, the impact of the discharge of metals in cooling system effluent would be small for all nuclear plants and remains a Category 1 issue.

Discharge of Biocides, Sanitary Wastes, and Minor Chemical Spills

The use of biocides is common and is required to control biofouling and nuisance organisms in plant cooling systems. However, the types of chemicals, their amounts or concentrations, and the frequency of their use may vary. The use of biocides at nuclear power plants was discussed generally in Section 3.5.1. Ultimately, any biocides used in the cooling system are discharged to surface water bodies. The discharge of treated sanitary waste also occurs at plants. Discharge may occur via onsite wastewater treatment facilities, via an onsite septic field, or through a connection to a municipal sewage system. Minor chemical spills collected in floor drains are associated with industry in general and are a possibility at all plants. Each of these factors represents a potential impact on surface water quality. In the 1996 GEIS, the impacts of these releases were evaluated as two issues: (1) discharge of chlorine or other biocides and (2) discharge of sanitary wastes and minor chemical spills. Here they are treated as a single issue.

Discharge of cooling water is monitored through individual State NPDES programs. The flow rate and chemical content of the water at discharge outfalls are regulated by State oversight in accordance with the NPDES permit. Wastewater discharge is also covered through NPDES permitting, and it includes biochemical monitoring parameters. Discharge from building drains is also addressed in the NPDES permit. Because of State regulatory involvement, and because regulatory and resource agencies have not found significant problems with outfall monitoring, the impacts from the discharge of chlorine and other biocides and minor spills of sanitary wastes and chemicals during license renewal and refurbishment were considered to be small for all plants and designated as Category 1 issues in the 1996 GEIS. No new information has

been identified in plant-specific SEISs or associated literature that would alter this conclusion. On the basis of these considerations, the discharge of biocides, sanitary wastes, and minor chemical spills would be small for all nuclear plants and remains a Category 1 issue.

Water Use Conflicts (Plants with Once-Through Cooling Systems)

Nuclear power plant cooling systems may compete with other users relying on surface water resources, including downstream municipal, agricultural, or industrial users. Once-through and closed-cycle cooling systems have different water consumption rates. Once-through cooling systems return most of their withdrawn water to the same surface water body, with evaporative losses of less than 3 percent (Solley et al. 1998). Consumptive use by plants with once - through cooling systems during the license renewal term is not expected to change unless power uprates, with associated increases in water use, are proposed. Such uprates would require an environmental assessment by the NRC.

Future scenarios for water availability focus on climate change and associated changes in precipitation and temperature patterns. Increased temperatures and/or decreased rainfall would result in lower river flows, increased cooling pond evaporation, and lowered water levels in the Great Lakes or reservoirs. While weather will vary from year to year, the results of climate change models and the projected changes to surface water runoff in the 21st century (NETL 2006) predicted increases in runoff in the eastern United States and decreases in runoff in the western United States, where water is currently less available. Regardless of overall climate change, droughts could result in problems with water supplies and allocations. Because future agricultural, municipal, and industrial users would continue to share their demands for surface water with power plants, conflicts might arise if the availability of this resource decreased. This situation would then necessitate decisions by local, State, and regional water planning officials.

Population growth around nuclear power plants has caused increased demandcaused increased demand on municipal water systems, including systems that rely on surface water. Municipal intakes located downstream of a nuclear power plant could experience water shortages, especially in times of drought. Water demands upstream of a plant could impact the water availability at the plant's intake.

In the 1996 GEIS, impacts of continued operations and refurbishment on water use conflicts associated with once-through cooling systems were considered to be small and were designated as a Category 1 issue. No new information has been identified in plant-specific SEISs or associated literature that would alter this conclusion. On the basis of these considerations, the NRC concludes that the impact on water use conflicts from the continued operation and refurbishment activities would be small for plants that utilize once-through cooling and remains a Category 1 issue.

Water Use Conflicts (Plants with Cooling Ponds or Cooling Towers Using Makeup Water from a River with Low Flow)

Nuclear power plant cooling systems may compete with other users relying on surface water resources, including downstream municipal, agricultural, or industrial users. Closed-cycle cooling is not completely closed, because the system discharges blowdown water to a surface water body and withdraws water for makeup of both the consumptive water loss due to evaporation and drift (for cooling towers) and blowdown discharge. For plants using cooling towers, the makeup water needed to replenish the consumptive loss of water to evaporation can be significant and is reported at 60 percent or more of the condenser flow rate by Solley et et al. (1998). Cooling ponds will also require makeup water as a result of naturally occurring evaporation, evaporation of the warm effluent, and possible seepage to groundwater.

Consumptive use by plants with cooling ponds or cooling towers using makeup water from a river with low flow during the license renewal term is not expected to change unless power uprates, with associated increases in water use, are proposed. Such uprates would require an environmental assessment by the NRC.

As stated earlier, increased temperatures and/or decreased rainfall would result in lower river flows, increased cooling pond evaporation, and lowered water levels in the Great Lakes or reservoirs. Regardless of overall climate change, droughts could result in problems with water supplies and allocations. Conflicts might arise due to competing agricultural, municipal, and industrial user demands for surface water with power plants. Closed cooling systems are more susceptible to these issues than once-through cooling systems because they consume more water. For this reason, climate change is more of a potential concern for water use conflicts among closed systems.

Population growth around nuclear power plants has caused increased demand on municipal water systems, including systems that rely on surface water. Municipal intakes located downstream of a nuclear power plant could experience water shortages, especially in times of drought. Similarly, water demands upstream of a plant could impact the water availability at the plant's intake.

The SEIS for the Wolf Creek plant in Kansas identified a site-specific water use conflict with a small to moderate impact (NRC 2008a). Makeup water for the Wolf Creek cooling lake (Coffee County Lake) is withdrawn from the Neosho River downstream of John Redmond Reservoir. The ecosystem downstream of this reservoir includes an endangered fish species, the Neosho madtom (*Noturus placidus*), which may be affected by the plant's water use during periods when the lake level is low and makeup water is obtained from the Neosho River.

As discussed in the 1996 GEIS, water use conflicts have also been observed for plants with closed-cycle cooling systems. The Limerick plant on the Schuylkill River in Pennsylvania is cited as an example of a plant on which limits were imposed on the rate of withdrawal from a river for the purpose of avoiding water use conflicts, including downstream water availability and water quality. Availability problems for downstream habitat and users have also been identified as a conflict at the Palo Verde plant in Arizona and may be anticipated at other plants.

Water use conflicts associated with plants with cooling ponds or cooling towers using make-up water from a river with low flow were considered to vary among sites because of differing site-specific factors, such as makeup water requirements, water availability (especially in terms of varying river flow rates), changing or anticipated changes in population distributions, or changes in agricultural or industrial demands. No new information has been identified in plant-specific SEISs or associated literature has been identified that would alter this conclusion.

On the basis of these considerations, the impact of water use conflicts from the continued operation and refurbishment activities at plants with cooling ponds or cooling towers using makeup water from a river with low flow could be small or moderate, depending on factors such as plant-specific design characteristics affecting consumptive water use, the characteristics of the water body serving as the source for makeup water, and the amount of competing use for that water. Because the impact could vary among nuclear plants, the issue is considered to be Category 2.

Effects of Dredging on Water Quality

Dredging in the vicinity of surface water intakes, canals, and discharge structures takes place in order to remove deposited sediment and maintain the function of plant cooling systems. Dredging may also be needed to maintain barge shipping lanes. Whether accomplished by mechanical, suction, or other methods, dredging disturbs sediments in the surface water body and affects surface water quality. In pristine locations, the impact will affect the turbidity of the water column. In areas affected by industries, dredging can also mobilize heavy metals, polychlorinated biphenyls (PCBs), or other contaminants in the sediments.

The frequency of dredging depends on the rate of sedimentation. At the Oyster Creek plant in New Jersey, dredging took place during site construction to create canals for the once-through cooling system (NRC 2007b). Depth measurements are performed here every two years, and dredging has taken place on portions of the canal system since construction. At the Susquehanna plant in Pennsylvania, the plant's river intake and diffuser pipe are dredged annually (NRC 2008b). In general, maintenance dredging affects localized areas for a brief period of time. Dredging operations are performed under permits issued by the U.S. Army Corps of Engineers (USACE). State permits may also be required. The permitting process may include planning for the sampling and disposal of the dredged sediments.

The impact of dredging has not been found to be a problem at operating nuclear power plants. Dredging has localized effects on water quality that tend to be short-lived. The impact of dredging on water quality would be small for all nuclear plants and is considered a Category 1 issue.

Temperature Effects on Sediment Transport Capacity

Increased temperature and the resulting decreased viscosity have been hypothesized to change the sediment transport capacity of water, leading to potential sedimentation problems, altered turbidity of rivers, and changes in riverbed configuration. Coutant (1981) discussed the theoretical basis for such possible changes, as well as relevant field investigations, and concluded that there is no indication that this is a significant problem at operating power stations. Examples of altered sediment characteristics are more likely the result of power plant structures (e.g., jetties or canals) or current patterns near intakes and discharges; such alterations are readily mitigated.

Based on review of literature and operational monitoring reports, consultations with utilities and regulatory agencies, and public comments on previous license renewal reviews, there is no evidence that temperature effects on sediment transport capacity have caused adverse environmental effects at any existing nuclear power plant. Regulatory agencies have expressed no concerns regarding the impacts of temperature effects on sediment transport capacity. Furthermore, because of the small area near the plant affected by increased water temperature, it is not expected that plant operations would have a significant impact. Effects are considered to be of small significance for all plants. No change in the operation of the cooling system is expected during the license renewal term so no change in effects on sediment transport capacity is anticipated. This is considered a Category 1 issue.

4.5.1.2 Groundwater

Operational activities during the license renewal term would be similar to those occurring during the current license term and would not affect groundwater resources. The impact issues of concern are availability of groundwater and the effect of nuclear plant operations on water quality.

The following nine issues concern impacts on groundwater that may occur during the license renewal term:

- Impacts of continued operations and refurbishment activities on groundwater use and quality (issue modified from the 1996 GEIS to include the impacts of continued operations);

- Groundwater use conflicts for plants that withdraw less than 100 gallons per minute (gpm) (378 L/min) (evaluated in the 1996 GEIS);

- Groundwater use conflicts for plants that withdraw more than 100 gpm (378 L/min) including those using Ranney wells (combination of two issues from the 1996 GEIS: (1) groundwater use conflicts for potable and service water and dewatering for plants that use more than 100 gpm (378 L/min) and (2) groundwater use conflicts for plants that use Ranney wells);

- Groundwater use conflicts for plants with closed-cycle cooling systems that withdraw makeup water from a river (issue modified from the 1996 GEIS to include all rivers);

- Groundwater quality degradation resulting from water withdrawals (combination of two issues from the 1996 GEIS: (1) groundwater quality degradation for plants that use Ranney wells and (2) groundwater quality degradation from saltwater intrusion);

- Groundwater quality degradation for plants using cooling ponds in salt marshes (evaluated in the 1996 GEIS);

- Groundwater quality degradation for plants using cooling ponds at inland sites (evaluated in the 1996 GEIS);

- Groundwater and soil contamination (new issue not considered in the 1996 GEIS); and

- Radionuclides released to groundwater (new issue not considered in the 1996 GEIS);

Impacts of Continued Operations and Refurbishment Activities on Groundwater Use and Quality

As mentioned in Section 3.5.2, the original construction of some plants required dewatering of a shallow aquifer, and operational dewatering takes place at some plants. This is accomplished by systems of pumping wells or drain tiles. Continued operations and refurbishment activities during the license renewal term are not expected to require any significant dewatering that would have an incremental effect over that which has already taken place. During continued operations and refurbishment, any wastes or spills (e.g., fuels and paints) affecting groundwater quality would be addressed in a manner consistent with best management practices, such as using secondary containment for fuels and implementing spill prevention and control plans. Soils contaminated by spills may need to be excavated for remediation before the chemicals leach to the shallow groundwater.

In the 1996 GEIS, the groundwater impacts associated with refurbishment activities were considered to be small for all nuclear plants and designated as Category 1. No new information has been identified in plant-specific SEISs or associated literature that would alter this conclusion. On the basis of these considerations, the impact of continued operations and refurbishment activities during the license renewal term on groundwater use and quality would be small for all nuclear plants and remains a Category 1 issue.

Groundwater Use Conflicts for Plants That Withdraw Less Than 100 Gallons per Minute

Water wells are commonly used at sites to provide water for the potable water system, although municipal water is available at some nuclear plants. Groundwater may also be used for landscaping (see Section 3.5.2). At some sites, groundwater is the source for the makeup and service water systems. In this case, the water undergoes treatment to prepare it for the intended use.

The pumping of groundwater creates a cone of depression in the potentiometric surface around the pumping well. The amount the water table or potentiometric surface declines and the overall extent of the cone depend on the pumping rate, characteristics of the aquifer (e.g., its permeability), whether the aquifer is confined or unconfined, and certain boundary conditions (including the nearby presence of a hydrologically connected surface water body). Generally, plants with a peak withdrawal rate of less than 100 gpm (378 L/min) do not have a significant cone of depression. Their potential for causing conflict with other groundwater users would depend largely on the proximity of the other wells. As stated in the 1996 GEIS, cones of depression usually do not extend past the property boundary, reducing the possibility of a groundwater use conflict.

In the 1996 GEIS, the groundwater impacts associated with continued operations during the license renewal term were considered to be small for all nuclear plants and designated as Category 1. No new information has been identified in plant-specific SEISs or associated literature that would alter this conclusion. On the basis of these considerations, the impact on groundwater use conflicts from continued operations during the license renewal term for all nuclear plants that withdraw less than 100 gpm (378 L/min) would be small and remains a Category 1 issue.

Groundwater Use Conflicts for Plants That Withdraw More Than 100 Gallons per Minute

This issue is a combination of two issues in the 1996 GEIS: (1) groundwater use conflicts (potable and service water and dewatering; plants that use greater than 100 gpm [378 L/min]) and (2) groundwater use conflicts (plants that use Ranney wells).

Nuclear power plants withdraw groundwater for various purposes (see Section 3.5.2). Most plants use groundwater to supply their potable water and service water needs. In some cases, groundwater is pumped to intentionally lower high water tables. At the Grand Gulf plant in Mississippi, Ranney wells in the Mississippi River alluvium are used to provide cooling system makeup water (see Section 3.5.2).

As described in the section above, the pumping of groundwater is expected to create a cone of depression around the well, with the degree of aquifer dewatering dependent on various factors. A nuclear plant may have several wells, with combined pumping in excess of 100 gpm (378 L/min). Overall site pumping rates of this magnitude have the potential to create conflicts with other local groundwater users if the cone of depression extends to the offsite well(s). Large offsite pumping rates for municipal, industrial, or agricultural purposes may, in turn, lower the water level at power plant wells. For any user, allocation is normally determined though a State-issued permit.

Groundwater use conflicts have not been observed at any nuclear power plants, and no significant change in water well systems is expected over the license renewal term. If a conflict did occur, it might be possible to resolve it if the power plant relocated its well or wellfield to a different part of the property. The siting of new wells would be determined through a hydrogeologic assessment.

In the 1996 GEIS, groundwater use conflicts were considered for plants that withdraw more than 100 gpm (378 L/min) or plants that use Ranney wells. The staff concluded that the impacts of continued operations and refurbishment would not necessarily be the same at all nuclear plant sites (i.e., a Category 2 issue) because of site-specific factors (e.g., well pump rates, well locations, and hydrogeologic factors) and that the impacts could be small, moderate, or large. No new information has been identified in plant-specific SEISs or associated literature that would alter this conclusion. On the basis of these considerations, groundwater use conflicts for plants that withdraw more than 100 gpm (378 L/min) could be small, moderate, or large, depending on the plant-specific characteristics described above and remains a Category 2 issue.

Groundwater Use Conflicts for Plants with Closed-Cycle Cooling Systems That Withdraw Makeup Water from a River

In the case of plants with cooling towers that rely on a river for makeup of consumed (evaporated) cooling water, it is possible water withdrawals from the river could lead to groundwater use conflicts with other users. This situation could occur because of the interaction between groundwater and surface water, especially in the setting of an alluvial aquifer in a river valley. Consumptive use of the river water, if significant enough to lower the river's water level, would also influence water levels in the alluvial aquifer. Shallow wells of

nearby groundwater users could therefore have reduced water availability or go dry. During times of drought, the effect would be occurring naturally, although withdrawals for makeup water would increase the effect. In the 1996 GEIS, a situation at the Duane Arnold plant in Iowa was described in which a reservoir on a small tributary is used as a secondary supply of makeup water for the plant's cooling towers. During low-flow conditions in the plant's usual source of water, the Cedar River, the plant is not allowed to withdraw the river water. Instead, it uses the reservoir temporarily. Because the high rate of water usage can lower the water level in the reservoir significantly, local users of shallow groundwater may be affected. As described for other issues above, this situation is highly dependent on the vicinity's hydrogeologic framework and the locations, depths, and pump rates of wells, in addition to the amount that the surface water level declines.

In the 1996 GEIS, groundwater use conflicts for plants that use cooling towers withdrawing makeup water from a river during continued operations and refurbishment would not necessarily be the same at all nuclear plant sites because of site-specific factors (e.g., the amount of surface water decline, well pump rates, well locations, and hydrogeologic factors) and that the impact could be small, moderate, or large. Therefore, this issue was considered Category 2. No new information has been identified in plant-specific SEISs or associated literature that would alter this conclusion. On the basis of these considerations, groundwater use conflicts for nuclear plants that use closed-cycle cooling systems that withdraw makeup water from a river could have small, moderate, or large impacts depending on the plant-specific characteristics of surrounding areas described above and remains a Category 2 issue.

Groundwater Quality Degradation Resulting from Water Withdrawals

This issue is a combination of two related issues in the 1996 GEIS: (1) groundwater quality degradation for plants that use Ranney wells and (2) groundwater quality degradation (saltwater intrusion). These two issues both consider the possibility of groundwater quality becoming degraded as a result of drawing water of potentially lower quality into the aquifer. For this reason, they are discussed here as a single issue.

A well near a river may draw lower-quality river water into the aquifer as a function of the interaction between groundwater and surface water. An example of Ranney wells (see Section 3.5.2) at the Grand Gulf plant in Mississippi causing induced infiltration of Mississippi River water into the alluvial aquifer was discussed in the 1996 GEIS. While site-specific hydrogeologic factors and well design may provide some control on the flow of surface water to the well, the bulk of the groundwater pumped by a well in an alluvial aquifer near a river is expected to be induced surface water, with a smaller component of groundwater from the direction opposite the river. If well pumping is continuous, the only portion of the shallow aquifer significantly affected by induced infiltration remains in the capture zone of the well(s).

Therefore, the portion of the aquifer with water quality parameters approaching those of the river water would usually be located on the power plant's property.

Wells in a coastal setting (ocean shore or estuary) have the potential to cause saltwater intrusion into the aquifer. This water quality problem is a common concern for large pumping centers associated with municipal or industrial users. The degree of saltwater intrusion depends on the cumulative pumping rates of wells, their screen depths, and hydrogeologic conditions. Deep, confined aquifers, for example, may be separated from saline aquifers closer to the surface.

Impacts related to groundwater quality degradation for nuclear plants that use Ranney wells and groundwater quality degradation (saltwater intrusion) were designated as Category 1 issues in the 1996 GEIS. No new information has been identified in plant-specific SEISs or associated literature that would alter this conclusion. On the basis of these considerations, groundwater quality degradation resulting from water withdrawals would be small for all nuclear plants and remains a Category 1 issue.

Groundwater Quality Degradation for Plants Using Cooling Ponds in Salt Marshes

Nuclear plants that use cooling ponds as part of their cooling water system discharge effluent to the pond. The effluent's concentration of contaminants and other solids increases relative to that of the makeup water as it passes through the cooling system. These changes include increased total dissolved solids (since they concentrate as a result of evaporation), increased heavy metals (because cooling water contacts the cooling system components), and increased chemical additives to prevent biofouling. Because all the ponds are unlined (NRC 1996), the water discharged to them can interact with the shallow groundwater system and may create a groundwater mound. In this case, groundwater below the pond can flow radially outward, and this groundwater would have some of the characteristics of the cooling system effluent.

In salt marsh locations, the groundwater is naturally brackish and cannot be used for human use other than in industrial applications. Two nuclear plants, South Texas in Texas and Turkey Point in Florida, have cooling systems (cooling pond and cooling canal system, respectively) located in salt marshes. Plants relying on brackish water cooling systems would not further degrade the quality of the shallow aquifer relative to its use classification. Plants relying on cooling ponds in salt marsh settings are expected to have a small impact on groundwater quality. This is the same conclusion reached in the 1996 GEIS. No new information has been identified in plant-specific SEISs or associated literature that would alter this conclusion. On the basis of these considerations, the impact of groundwater quality degradation for nuclear plants using cooling ponds in salt marshes would be small and is considered a Category 1 issue.

Groundwater Quality Degradation for Plants Using Cooling Ponds at Inland Sites

The above discussion on cooling ponds relates to this issue. Some nuclear power plants that rely on unlined cooling ponds are located at inland sites surrounded by farmland or forest or undeveloped open land. Degraded groundwater has the potential to flow radially from the ponds and reach offsite groundwater wells. The degree to which this occurs depends on the water quality of the cooling pond; site hydrogeologic conditions (including the interaction of surface water and groundwater); and the location, depth, and pump rate of water wells. Mitigation of significant problems stemming from this issue could include lining existing ponds, constructing new lined ponds, or installing subsurface flow barrier walls. Groundwater monitoring networks would be necessary to detect and evaluate groundwater quality degradation. The degradation of groundwater quality associated with cooling ponds has not been reported for any inland nuclear plant sites.

The 1996 GEIS considered the impacts of this issue during continued operations and concluded that the impact would not necessarily be the same at all sites (i.e., a Category 2 issue) and could be small, moderate, or large. No new information has been identified in plant-specific SEISs or associated literature that would alter this conclusion.

On the basis of these considerations, the impacts of groundwater quality degradation for plants using cooling ponds at inland sites could be small, moderate, or large, depending on site-specific differences in the cooling pond's water quality; site hydrogeologic conditions (including the interaction of surface water and groundwater); and the location, depth, and pump rate of water wells. The issue is considered a Category 2 issue.

Groundwater and Soil Contamination During Continued Operations and Refurbishment Activities

The contamination of groundwater and soil can result from general industrial practices at any site and is not limited to those occurring at nuclear power plants. Activities that result in contamination may include the use of solvents, hydrocarbon fuels (diesel and gasoline), heavy metals, or other chemicals. These materials all have the potential to affect groundwater and soil if released. Furthermore, contaminants present in the soil can act as long-term sources of contamination to underlying groundwater.

Based on previous plant-specific reviews, these types of groundwater and soil contamination problems have occurred at many operating plants. Examples of the types of contamination that may be present at a plant include hydrocarbon leaks or spills at a storage tank, leaked or spilled solvents from barrels, and a hydraulic oil line break (NRC 2006d), thallium in soil at a seepage pit, heavy metals in soil at a sand blasting site, a diesel fuel line leak, methyl tertiary butyl ether (MTBE) from spills of a gasoline storage tank, PCBs in soil as a result of former dielectric fluid

use (NRC 2007b), and hydrocarbon spills and sulphuric acid leaks (NRC 2008b). These situations have required regulatory involvement by State agencies during both monitoring and remediation phases. Remediation has taken place in the form of excavation and recovery wells. The number of occurrences of such problems can be minimized by means of proper chemical storage, secondary containment, and leak detection equipment.

An additional source of groundwater contamination can be the use of wastewater lagoons. At the Cook plant in Michigan, permitted wastewater ponds are used for receiving treated sanitary wastewater and for process wastes from the turbine room sump. Groundwater monitoring has shown that concentrations of water quality parameters have increased to levels above background but below drinking water standards (NRC 2005a). As a result, in an arrangement with the county, the use of groundwater by other users in a designated area has been restricted.

Remediation of groundwater contamination can involve long-duration cleanup processes that depend on the types, properties, and concentrations of the contaminants; aquifer properties; groundwater flow field characteristics; and remedial objectives. Contaminants may be able to migrate to onsite potable wells or to the wells of offsite groundwater users. Groundwater monitoring programs would be expected to identify problems before contaminated groundwater reached receptors; however, monitoring wells need to be present and in proper locations in order to detect contaminants. On the basis of these considerations, the impact of groundwater and soil contamination during operations and refurbishment activities could be small or moderate, depending on the factors described above and is considered a Category 2 issue.

Radionuclides Released to Groundwater

There is growing concern about radionuclides detected in groundwater at nuclear power plants. These releases have occurred as leaks in at least 14 plants (NRC 2006a). Tritium, being the most mobile radionuclide in soil and groundwater, is of particular concern. Concentrations of tritium in sampled onsite groundwater at many of these plants ranged well above the EPA drinking water standard of 20,000 pCi/L. Examples include onsite monitoring well samples of up to 250,000 pCi/L at the Braidwood plant in Illinois, up to 211,000 pCi/L at the Indian Point plant in New York (NRC 2008c), up to 486,000 pCi/L at the Dresden plant in Illinois, more than 30,000 pCi/L at the Watts Bar plant in Tennessee, and 71,400 pCi/L at the Palo Verde plant in Arizona. Examples of samples taken either directly from the source of the leak or from nearby onsite monitoring wells include samples with up to 200,000 pCi/L of tritium at the Callaway plant in Missouri, up to 15,000,000 pCi/L at the Salem plant in New Jersey, and up to 750,000 pCi/L at the Seabrook plant in New Hampshire. At the Byron plant in Illinois, tritium in monitoring wells was above the background level but below drinking water standards (up to 3800 pCi/L). The location and construction of the monitoring wells relative to potential leak locations have

not been evaluated. For each example, it is possible that a different well placement could detect higher or lower activity concentrations.

Other reported instances (NRC 2006a) of tritium above background levels have been a result of operator error, licensed discharge, or leaks or discharges to drain systems. At the Oyster Creek plant in New Jersey, a mistake involving a valve allowed tritium-contaminated water to flow to the discharge canal. Sampling of this water showed levels of 16,000 pCi/L. At the Wolf Creek plant in Kansas, an onsite lake receiving liquid effluent was found to have a tritium activity concentration of 13,000 pCi/L (NRC 2008a). The Perry plant in Ohio had water samples in its drainage system with an activity concentration of 60,000 pCi/L. In each of these cases, the tritium present at the surface could infiltrate or seep into the groundwater system.

The NRC does not consider these tritium releases to be a health risk to the public or onsite workers in any of these cases (NRC 2006a) because the tritiated groundwater is expected to remain onsite. However, an exception is the event at Braidwood, which resulted in detectable concentrations of tritium at an offsite location. Sampling of an offsite residential well at Braidwood showed 1600 pCi/L of tritium which is above the background level but well below EPA's drinking water standard. Risk to workers would arise if onsite wells were used for the potable water system and if the leak was in the capture zone of the well. However, the NRC requires that the onsite potable well water be monitored for radioactivity to protect the workers.

As discussed in Section 3.5.2, groundwater monitoring efforts are increasing in accordance with industry guidelines (Nuclear Energy Institute 2007). With these monitoring networks, the presence and extent of any tritium plumes (both onsite and offsite) will become clearer. These new monitoring well networks are expected to provide information about any existing tritium groundwater plumes and future system leaks by siting additional wells at key locations. Well design and depth would be determined through a site-specific assessment of the hydrogeology and the subsurface infrastructure. Because the leaks are typically underground, detection does not occur promptly. In addition to monitoring wells, leak detection equipment or surveillance of accessible piping and components containing radioactive materials would improve the chance of discovery of a tritium leak before significant activity reached an aquifer.

On the basis of occurrences at several nuclear plants, the impact of radionuclide releases to groundwater quality could be small or moderate, depending on the occurrence and frequency of leaks and the ability to respond to leaks in a timely fashion. The issue is considered a Category 2 issue.

4.5.2 Environmental Consequences of Alternatives to the Proposed Action

Construction – Construction-related impacts on hydrology (land clearing during and impervious pavements) would alter surface drainage patterns and groundwater recharge zones. Surface

water runoff over disturbed ground and material stockpiles could increase levels of dissolved and suspended solids and other contaminants. Groundwater withdrawn from onsite wells and dewatering systems could depress the water table and possibly change the direction of groundwater flow near the plant. Concrete production and wetting of ground surfaces and unpaved roadways for fugitive dust control could require substantial amounts of water. Appropriate permits, including a Clean Water Act Section 404 permit, Section 401 certification, and Section 402(p) NPDES general stormwater permit, would be required prior to construction. Surface drainage patterns would be affected.

Operation – Most electrical power plants require water for cooling. As a result, fossil-fueled and nuclear power plants are generally located near large surface water bodies, including lakes, rivers, or oceans. Water cooling systems at power plants use either once-through or closed-cycle systems. Water can also be purchased from municipalities or commercial water providers or obtained from onsite wells or a combination of the above.

Potential impacts to surface waters could occur from blowdown and evaporative losses in the steam cycle and cooling system and from drift of chemically treated cooling water from the cooling tower. Releases of industrial wastewaters would be controlled by an NPDES permit.

4.5.2.1 Fossil Energy Alternatives

Operation – Fossil fuel power plants require a continuous supply of water to operate. Water demands vary greatly among technologies, ranging from a low of 3,760 gpm (14,222 L/m) for an integrated gasification combined cycle (IGCC) technology without carbon capture and storage to more than 14,000 gpm (53,000 L/m) for a subcritical pulverized coal unit with carbon capture and storage. EPA estimates of raw water usage for various coal-burning technologies, normalized to a nominal generating capacity of 500 MW(e), appear in Table 4.5.2.1–1. Hydrology would be affected not only by water withdrawals but by reintroduction of water from steam cycle, cooling tower, and gasifier blowdown water. Hydrology would also be affected by wastewater generated by coal and exhaust-gas cleaning devices that may be operating and by other ancillary industrial activities.

Table 4.5.2.1–1. Raw Water Usage Estimates for Fossil Fuel Electric Power Technologies

Technology	Coal Rank		
	Bituminous	Sub-Bituminous	Lignite
	Water Usage expressed as lb/MWh (lb/MMBtu input) [gal/min]		
IGCC	4,960 (685) [4,950][(a)]	5,010 (676) [5,000][(a)]	5,270 (700) [5,259][(b)]
Subcritical PC[(c)]	9,260 (1,050) [9,241]	9,520 (1,050) [9,501]	9.960 (1,050) [9,940]
Supercritical PC[(c)]	8,460 (1,050) [8,443]	8,830 (1,060) [8,812]	9,200 (1,055) [9,182]
Ultra-supercritical PC[(c)]	7,730 (1,050) [7,717]	7,870 (1,050) [7,857]	8,710 (1,050) [8,695]

IGCC = integrated gasification combined cycle.
(a) 500-MW(e) (net) unit equipped with a slurry-feed gasifier.
(b) 500-MW(e) (net) unit equipped with a solid-feed gasifier.
(c) 500-MW(e) (net) unit.
Source: EPA 2006

Water usage is a function of the coal combustion technology, heating value of the coal being consumed, the design of the primary cooling systems (e.g., once-through versus closed-cycle, mechanical versus natural draft, dry cooling, and wet/dry hybrid cooling), and the operation of various other devices, such as gasifiers and gas-cleaning units (including flue gas desulfurization), all of which require water.

4.5.2.2 New Nuclear Alternatives

Operation – Hydrology would be affected by operation of the cooling system and by discharges of blowdown water from the cooling system and steam cycle, both of which can introduce chemical contaminants and heat to the receiving surface water body. Operation of these systems could also affect hydrology by reducing available surface water volume, altering current patterns at intake and discharge structures, altering salinity gradients, scouring and increases in sediment caused by discharges of treated cooling water, and increasing water temperature. Hydrologic impacts would vary, depending on the surface water source used for cooling as well as the cooling water system employed. Hydrology can also be affected by the plant's service water system, which provides water for turbine and reactor auxiliary equipment cooling, reactor shutdown cooling, and other services. Surface water and groundwater can also be affected by discharges authorized under permits and by accidental spills and leaks of radionuclides, chemicals, and fuels to the ground surface. Overall, impacts on hydrology at a greenfield site could be significant and depend highly on local circumstances and factors such as other dependencies on the hydrologic resources. Hydrologic impacts on a brownfield site or an existing nuclear facility could also be significant, depending on whether or not the new nuclear plant could use the existing cooling water system.

4.5.2.3 Renewable Alternatives

Operations – The operational impacts of alternative energy technologies on water resources are presented in the following subsections.

Hydroelectric Energy Sources

Reservoirs could be affected by changes in water temperature and amounts of dissolved oxygen. Surface water temperatures in the reservoir could be affected when water flow is reduced. Warm water released from the top of the dam and cooler water released from the lower portions of the dam could affect river water temperatures downstream. Additionally, both low- and high-flow conditions would alter sediment transport and deposition patterns.

Geothermal

Hydrology would be affected by water consumed by the facility; the project could consume up to 6.8 ac-ft/yr of water during operation. Degradation and loss of integrity of geothermal wells could affect shallow groundwater quality through the release of contaminants. Liners installed on any surface impoundments should be sufficient to protect surface water resources from contamination by industrial fluids (including geothermal fluids) during routine operation.

Wind

No impacts on hydrology are expected to result from routine operation of either onshore or offshore wind farms.

Biomass

Water demands for cooling and steam would be similar to those of a fossil fuel-fired power plants. Water demand could equal evaporative water loss from cooling tower and flue gas scrubbers, and blowdown waters discharged from steam cycle and cooling water systems. Water demand could range from 3000 to 5000 gpm. Water quality would be affected by contaminants released in runoff from piles of feedstock materials, fly and bottom ash, and scrubber sludge.

Solar Thermal

There is a potential for contamination from accidental release of working fluids (heat transfer fluids) or thermal storage media (molten salts) contained in binary systems. For an advanced power tower facility operating in 2030 and using a wet mechanical cooling tower, projected

water demands (i.e., consumptive use as a result of water lost to evaporation) would be 2.4 m^3/MWh (EERE 1997).

4.6 Ecology

4.6.1 Environmental Consequences of the Proposed Action – Continued Operations and Refurbishment

Environmental conditions at all nuclear power plants and associated transmission lines have been well established during the current licensing term. These conditions are expected to remain unchanged during the 20-year license renewal term. The following section describes the effects of continued operations and refurbishment activities on terrestrial and aquatic resources over the license renewal term.

Continued operations and refurbishment are not expected to change substantially over the license renewal term. Therefore, license renewal generally represents a continuation of current environmental stresses that have existed over many years of operation. However, due to the ever-changing nature of biological communities, the impacts of continued operation may change. These conditions are described in Sections 3.6.1 (Terrestrial Ecology), 3.6.2 (Aquatic Ecology), and 3.6.3 (Threatened, Endangered, and Protected Species and Essential Fish Habitat). The factors associated with continued operations and refurbishment activities that could affect these resources over the 20-year license renewal term are presented in the following sections.

4.6.1.1 Terrestrial Ecology

Continued operations of the nuclear power plants during the 20-year license renewal term are expected to include operation of cooling towers, operation of once-through cooling systems and cooling ponds, management of transmission line ROWs, maintenance of site facilities, releases of gaseous and liquid effluents, and potentially, and refurbishment-related construction activities. Terrestrial habitats and wildlife would continue to be exposed to cooling tower drift; maintenance activities associated with ROWs, cooling systems, and site facilities; and chemical and radiological releases. Cooling towers and transmission lines would continue to be potential collision hazards for birds, wildlife near the site would be exposed to elevated noise levels, and refurbishment-related construction activities could result in habitat loss and disturbance of wildlife. Details regarding these impacting factors are presented in Section 3.6.1.

This section considers the following issues related to terrestrial resources:

- Effects of continued operations, maintenance, and refurbishment activities on terrestrial resources (issue modified from the 1996 GEIS to include the impacts of continued operations and maintenance activities);

- Exposure of terrestrial biota to radionuclides (new issue not considered in the 1996 GEIS);

- Cooling system (excluding cooling tower) impacts on terrestrial resources (issue modified from the 1996 GEIS to include once-through cooling systems as well as cooling ponds);

- Cooling tower impacts on vegetation (combination of two issues from the 1996 GEIS: (1) cooling tower impacts on agricultural crops and ornamental vegetation, and (2) cooling tower impacts on terrestrial ecology);

- Bird collisions with cooling towers and transmission lines (combination of two issues in the 1996 GEIS: (1) bird collisions with cooling towers and (2) bird collision with transmission lines);

- Water use conflicts with terrestrial resources (plants with cooling ponds or cooling towers using makeup water from a river with low flow) (separated from water use conflicts for surface water in 1996 GEIS);

- Transmission line ROW management impacts on terrestrial resources (combination of two issues from the 1996 GEIS: (1) power line ROW management effects on wildlife and (2) floodplains and wetlands on power line ROWs. This issue includes impacts on upland plant communities); and

- Effects of electromagnetic fields on flora and fauna (plants, agricultural crops, honeybees, wildlife, livestock) (issue from the 1996 GEIS).

Effects of Continued Operations on Terrestrial Resources

Continued operations, refurbishment, and maintenance activities could continue to affect onsite terrestrial resources during the license renewal term at all operating nuclear power plants. Factors that could potentially result in impacts include landscape maintenance activities, storm water management, and elevated noise levels. These impacts would, for the most part, be similar to past and ongoing impacts. The 1996 GEIS did not evaluate the impact of continued operations and maintenance on onsite biota, but this issue has been identified by the NRC for

consideration in this GEIS revision on the basis of environmental reviews performed for plant-specific SEISs.

Nuclear power plant sites are typically maintained as modified habitats with lawns and other landscaped areas; however, they may also include disturbed early successional habitats or even small areas of relatively undisturbed habitat. Onsite developed areas are generally maintained by mowing and the application of herbicides or pesticides. The diversity of plant species in these areas is generally kept at a reduced level. Plant species often consist of cultivated varieties or weedy species tolerant of disturbance. Areas of the nuclear plant site outside the security fence may include natural areas, such as forests or shrublands, in various degrees of disturbance. Onsite wetlands may be affected by storm water management. Effects may include changes in plant community characteristics, altered hydrology, decreased water quality, and sedimentation (EPA 1993, 1996; Wright et al. 2006). Impervious surfaces within the watershed generally result in increased runoff and reduced infiltration, causing changes in the frequency or duration of inundation or soil saturation and greater fluctuations in wetland water levels. Runoff may contain sediments, contaminants from road and parking surfaces, or herbicides. Erosion of wetland substrates and plants can result from increased flow velocities from impervious surfaces. Onsite wildlife near transformers or cooling towers are exposed to elevated noise levels that could disrupt behavioral patterns. Maintenance of landscaped areas generally keeps wildlife diversity lower than in surrounding habitats. Wildlife species occurring on sites within the security areas are typically limited by low habitat quality and generally include common species adapted to industrial sites.

The characteristics of terrestrial habitats and wildlife communities currently on nuclear power plant sites have generally developed in response to many years of typical operations and maintenance programs. While some may have reached a relatively stable condition, some habitats and populations of some species may have continued to change gradually over time. Operations and maintenance activities during the license renewal term are expected to be similar to current activities (see Section 2.1). Because the species and habitats present on the sites (i.e., weedy species and habitats they make up) are generally tolerant of disturbance, it is expected that continued operations during the license renewal term would maintain these habitats and wildlife communities in their current state, or maintain current trends of change.

Terrestrial habitats and wildlife could be affected by ground disturbance from refurbishment-related construction activities. Land disturbed during the construction of new independent spent fuel storage installations (ISFSIs) would range from about 1 to 4 ha (2.5 to 10 ac). Other activities may include new parking areas for plant employees, access roads, buildings, and facilities. Temporary project support areas for equipment storage, worker parking, and material laydown areas could also result in the disturbance of habitat and wildlife. In the 1996 GEIS, the NRC considered only the impacts of refurbishment on terrestrial habitats and concluded that the

impacts would not necessarily be the same at all sites (i.e., a Category 2 issue) and could range from small to large.

Operational activities occurring in undeveloped portions of the site would affect terrestrial habitats and wildlife. Some wildlife would be displaced to nearby available habitats. However, competition would increase for many species, reducing the likelihood of survival of displaced individuals. Indirect effects could include fugitive dust, alteration of hydrology from changes in surface water flow patterns and infiltration to shallow groundwater, water quality degradation, or establishment of invasive species. Species that are more sensitive to disturbance may be displaced by more tolerant species. Affected habitats may include uplands or wetlands on or near the activity as well as wetlands within the watershed. Alterations in vegetative cover, the compaction of upland soils, or the development of impervious surfaces within the watershed generally result in more runoff and less infiltration to shallow groundwater, causing an increase or decrease in the hydrologic input to nearby wetlands (EPA 1993; 1996; Wright et al. 2006). Effects include changes in the frequency or duration of inundation or soil saturation and greater fluctuations in wetland water levels. Runoff often contains sediments, contaminants from road and parking surfaces, or herbicides used in managing ROW or site vegetation (EPA 1993, 1996; Wright et al. 2006). The erosion of wetland substrates and plants can result from increased flow velocities. Actions that result in the discharge of dredge or fill material into wetlands that are under the jurisdiction of the Clean Water Act (CWA) require a Section 404 permit from the U.S. Army Corps of Engineers (USACE). Actions that could potentially affect threatened or endangered species would require consultation with the U.S. Fish and Wildlife Service (USFWS) under Section 7 of the ESA, or with State resource agencies. Rare or unique plant communities, sensitive habitats such as wetlands or rookeries, or high-quality undisturbed habitats may occur in or near potentially affected areas. Impacts on such habitats could be considered large if they caused the destabilization of a resource. Impacts would be considered small if only previously disturbed or other lower-quality habitats were affected.

Successful application of environmental review procedures, employed by the licensees at many of the operating nuclear plant sites, would result in the identification and avoidance of important terrestrial habitats. In addition, the application of best management practices to minimize the area affected; to control fugitive dust, runoff, and erosion from project sites; to reduce the spread of invasive nonnative plant species; and to reduce disturbance of wildlife in adjacent habitats could greatly reduce the impacts of continued operations and refurbishment activities.

Site-specific factors related to refurbishment activities may vary considerably among nuclear power plant sites. The habitats present on or in the vicinity of nuclear power plants also vary greatly. Therefore, a generic determination of potential impacts on terrestrial resources from refurbishment or other activities is not possible. Impacts on terrestrial habitats and wildlife would depend on site-specific factors, and impact assessments would need to be conducted on a site-specific basis prior to license renewal. Consistent with this finding, the NRC concluded in

the 1996 GEIS that the impacts of refurbishment actions could be significant if important resources are affected, depending on site-specific conditions.

On the basis of these considerations, the NRC concludes that the impact of continued operations, refurbishment, and maintenance activities similar to those occurring during the current license term on terrestrial resources could be small, moderate, or large, depending on site-specific differences in the terrestrial resources present, project-specific activities, and the effectiveness of mitigation measures. The issue is therefore considered a Category 2 issue.

Exposure of Terrestrial Organisms to Radionuclides

This section addresses the issue of potential impacts of radionuclides on terrestrial organisms resulting from normal operations of a nuclear power plant during the license renewal term. This issue was not evaluated in the 1996 GEIS. However, public concerns about the impacts of radionuclides on terrestrial organisms at some nuclear power plants have led to an evaluation of the issue in this GEIS revision.

Radionuclides may be released from nuclear power plants into the environment via a number of pathways. Releases into terrestrial environments often result from deposition of small amounts of radionuclide particulates released from power plant vents during normal operations. These releases typically include noble gases such as krypton, xenon, and argon (which are not deposited), tritium, isotopes of iodine, and cesium, and they may also include strontium, cobalt, and chromium. Radionuclides may also be released into the aquatic environment in the liquid effluent discharged from the plant's cooling system. Radionuclides, such as tritium, that enter shallow groundwater from cooling ponds, can be taken up by terrestrial plant species, including both upland species and wetland species, where wetlands receive groundwater discharge. Terrestrial biota may be exposed to ionizing radiation from radionuclides through direct contact with water or other media, inhalation, or ingestion of food, water, or soil.

The uptake of radionuclides, such as tritium and cesium, from soil and water by many plant species and their incorporation into plant tissues have been well demonstrated (Bell et al. 1988; Hinton et al. 1996; Hinton et al. 1999; Hitchcock et al. 2005; Kaplan et al. 2005; Sahr et al. 2005; NCRP 2006; Pinder et al. 2006). The degree of uptake varies according to the degree to which the radionuclide binds to the sediment particles (the partition coefficient [Kd] of the nuclide and sediment constituents, such as clay particles) as well as other environmental factors, such as pH or the concentrations of other elements such as potassium (NCRP 2006). The effects on plants of chronic exposure to radionuclides range from reduced trunk growth, canopy cover, stem growth, photosynthetic capacity, seed production and germination in trees, and reduced reproductive potential in herbaceous plants, to chromosome damage as well as mortality in both groups (IAEA 1992; Real et al. 2004; Sahr et al. 2005). Growth effects have been observed at dose rates above 0.01 rad/h (100 μGy/h), while chromosome effects have

occurred at 2.0×10^{-6} rad/h (0.02 μGy/h) (Real et al. 2004). Radionuclides are transferred to herbivores and subsequently to higher trophic levels, such as predators (Meyers-Schone and Walton 1990; Kelsey-Wall et al. 2005; Beresford et al. 2005; NCRP 2006).

The DOE guideline for radiation dose rates from environmental media recommends limiting the radiation dose to riparian and terrestrial mammals to less than 0.1 rad/d (0.001 Gy/d) and limiting the dose to terrestrial plants to less than 1.0 rad/d (0.01 Gy/d) (DOE 2002a). These guidelines were developed on the basis of experimental evidence that negative effects would not occur at these doses. The effects of ionizing radiation on populations of terrestrial organisms have been given considerable attention in the literature. A report by the International Atomic Energy Agency (IAEA 1992) described invertebrate organisms as being less sensitive to ionizing radiation than are vertebrates. There is additional evidence indicating that some terrestrial wildlife species may be more resistant to ionizing radiation than are humans. For instance, Ulsh et al. (2000) examined the effects of cesium-137 radiation on cellular processes of wild turtles and humans. They discovered that human fibroblasts were 1.7 times more sensitive to ionizing radiation than the fibroblasts of wild turtles.

Eisler (1994) summarized studies examining the effects of ionizing radiation on aquatic and terrestrial organisms and reported that chronic doses at the minimum treatment dose of 90 rad/d (0.9 Gy/d) reduced the growth of some bird species. Few studies examine the effects of ionizing radiation on birds at doses lower than 90 rad/d (0.9 Gy/d), and none of them observed any adverse effects. For example, Zach et al. (1993) found no negative effects on the breeding performance of adults or the growth of nestling tree swallows (*Tachycineta bicolor*) at doses as low as 0.014 rad/d (1.4×10^{-4} Gy/d). Eisler (1994) also reported that an acute exposure of 1.1 rad (0.011 Gy) was demonstrably harmful to small mammals. In a summary by Real et al. (2004), radiological dose rates as low as 1 rad/d (0.01 Gy/d) could be potentially harmful to some terrestrial plant species, although most effects were observed at doses greater than 100 rad/d (1 Gy/d). Furthermore, IAEA (1992) concluded that irradiation at chronic dose rates of 1 rad/d (0.01 Gy/d) or less are not likely to negatively affect plant populations.

Genetic effects of ionizing radiation on terrestrial biota have not been demonstrated at doses below the DOE guidelines. Turner et al. (1971) found that doses as low as 4 rad/d (0.04 Gy/d) adversely affect the reproductive capabilities of the leopard lizard (*Crotaphytus wislizenii*), and Nagasawa et al. (1990) observed chromosomal aberrations in the cells of hamsters at acute radiation doses as low as 2 rad (0.02 Gy). The European Committee on Radiation Risk (ECRR) reviewed studies concerning the effects of low-level radiation exposures on a variety of animal species. Although study details were not provided, the ECRR noted that a wide range of animal studies show juvenile mortality effects from internal irradiation, which have not been addressed by the International Commission on Radiological Protection (ICRP) or other risk agencies (ECRR 2003).

The NRC conducted a review of all operating nuclear power plants to evaluate the potential impacts of radionuclides on terrestrial biota from continued operations. Site-specific radionuclide concentrations in water, sediment, and soils were obtained from Radiological Environmental Monitoring Program (REMP) reports for 15 nuclear plants. These 15 plants were selected to represent sites with a range of radionuclide concentrations in the media, including plants with high annual worker total effective dose equivalent (TEDE) values (Tables 3.9-5 and 3.9-6) or public exposures (Tables 3.9-9, 3.9-10, and 3.9-11) for both boiling water reactors (BWRs) and pressurized water reactors (PWRs). The RESRAD-BIOTA dose evaluation model (DOE 2004e) was used to calculate estimated dose rates for terrestrial biota by using the media concentrations presented in the REMP reports (see Section D.5 in Appendix D for further details on the approach used).

Results of the RESRAD-BIOTA dose modeling are presented in Table 4.6.1.1–1, showing the total dose estimates for three different terrestrial ecological receptors: riparian animal (an animal that was assumed to spend approximately 50 percent of its time in aquatic environments and 50 percent of its time in terrestrial environments), terrestrial animal, and terrestrial plant. The maximum estimated dose rate calculated for any of the nuclear power plants is 0.0354 rad/d (3.54×10^{-4} Gy/d) (riparian animal at the Browns Ferry plant), which is below the guideline value of 0.1 rad/d (0.001 Gy/d) for a riparian animal receptor. It is unlikely that the normal operations of these power plants would have adverse effects on terrestrial biota resulting from radionuclide releases because the calculated doses are below protective guidelines and thus would not significantly affect populations.

Table 4.6.1.1–1. Estimated Radiation Dose Rates to Terrestrial Ecological Receptors from Radionuclides Measured in Water, Sediment, and Soils at U.S. Nuclear Power Plants

Power Plant	Sum of Total Dose (rad/d) for Receptor [(a)]			Source
	Riparian Animal	Terrestrial Animal	Terrestrial Plant	
Arkansas Nuclear	4.62×10^{-4}	3.37×10^{-7}	1.04×10^{-7}	Entergy 2006a
Browns Ferry	3.54×10^{-2}	1.10×10^{-2}	1.03×10^{-2}	TVA 2003
Calvert Cliffs	2.90×10^{-7}	2.65×10^{-3}	2.49×10^{-4}	CEG 2003
Columbia	2.62×10^{-3}	4.45×10^{-4}	2.82×10^{-5}	Energy Northwest 2005
Comanche Peak	1.50×10^{-2}	2.89×10^{-6}	9.37×10^{-7}	TXU 2004
D.C, Cook	2.48×10^{-3}	2.22×10^{-3}	2.44×10^{-4}	IMP 2006
Hatch	2.39×10^{-3}	1.82×10^{-6}	5.19×10^{-7}	Southern Company 2003
Fort Calhoun	5.26×10^{-4}	3.41×10^{-7}	1.06×10^{-7}	OPPD 2004
Indian Point	2.30×10^{-3}	2.22×10^{-3}	2.44×10^{-4}	Entergy 2006b
Millstone	3.31×10^{-3}	2.20×10^{-3}	2.20×10^{-4}	DNC 2004
Nine Mile Point	2.40×10^{-3}	1.83×10^{-6}	5.24×10^{-7}	CEG 2004
Palisades	6.00×10^{-6}	2.89×10^{-7}	9.48×10^{-8}	NMC 2004
Point Beach	7.79×10^{-3}	2.48×10^{-2}	2.12×10^{-2}	EIML 2005
San Onofre	7.79×10^{-3}	2.48×10^{-2}	2.12×10^{-2}	SCE 2005
Vermont Yankee	7.56×10^{-3}	1.85×10^{-6}	5.30×10^{-7}	Entergy 2003

(a) Dose rates were estimated with RESRAD-BIOTA (DOE 2004e) by using site-specific radionuclide concentrations in water, sediment, and soils obtained from the REMP reports.

On the basis of these calculations and a review of the available literature, the NRC concludes that the impact of routine radionuclide releases from past and current operations on terrestrial biota would be small at all nuclear plants and would not be expected to appreciably change during the renewal period. It is considered a Category 1 issue.

Cooling System Impacts on Terrestrial Resources

Terrestrial vegetation and wildlife could be affected by the continued operation of cooling systems at nuclear power plants during the 20-year license renewal term. This issue applies to nuclear power plants with once-through cooling systems and cooling ponds. In the 1996 GEIS, the NRC evaluated the impacts to terrestrial ecology from cooling ponds but not the impacts from once-through cooling systems. Impacts of cooling ponds on terrestrial resources were

considered to be small for all plants that used cooling ponds and were designated as Category 1 issues in the 1996 GEIS. The impact on terrestrial resources from the operations of other cooling systems has been identified by the NRC for consideration in this GEIS revision. The impacts of cooling tower operations are considered as a separate issue elsewhere in this section.

Primary impacts of continued operation of the cooling systems at nuclear power plants include alterations of the physical environment that terrestrial organisms inhabit. Such changes to the physical environment may include increased water temperatures; humidity and fogging; contaminants in surface water or groundwater; and disturbance of wetlands from dredging, disposal of dredged material, and erosion of shoreline wetlands. Water temperatures in cooling ponds, canals, and reservoirs may increase as warmwater effluent is discharged from the power plants. The elevated water temperatures associated with the cooling system may affect the distributions of some terrestrial plant and animal species associated with riparian or wetland communities. For example, the growth of plants along the cooling pond shoreline is restricted by the thermal effluent at the H.B. Robinson plant in South Carolina (NRC 2003b). Increased humidity and fogging around the cooling system discharge resulting from elevated water temperatures may alter the distributions of some vegetation communities. The cooling system may also transport contaminants generated during normal power plant operations to animal and plant receptors. Terrestrial biota may be exposed to contaminants released from the power plant's cooling system, either by direct contact with the cooling system effluent or through uptake from aquatic food sources near the cooling system. Terrestrial plants and wildlife associated with wetland or riparian communities along the receiving water body may be exposed, as well as wildlife that forage in these waters, such as waterfowl. In these cases, contaminants associated with the cooling system may have adverse impacts on terrestrial organisms. Maintenance dredging near cooling system intakes or outfalls may disturb wetland habitats along with accumulated sediments, and sedimentation from dredging disposal may indirectly affect wetlands. Shoreline wetlands or riparian habitats may be affected by erosion resulting from high-velocity effluent discharges or altered current patterns. The impacts of the cooling system are of concern if water temperature, humidity and fogging levels, contaminants associated within the discharged effluent, maintenance activities, or discharge flows have adverse effects on local plant and animal populations.

The NRC examined the potential impacts of the operation of nuclear power plant cooling systems on terrestrial resources during the 20-year license renewal term by reviewing published site-specific radiological effluent release (RER) reports, site environmental reports (ERs), and SEISs. For this analysis, a total of eight nuclear power plants with different types of cooling systems were investigated to determine the effects of cooling system operation on terrestrial resources. The type of cooling system that operated at each of the eight power plants reviewed, and a summary of the contaminants evaluated in the aquatic effluent, are shown in Table 4.6.1.1–2.

Table 4.6.1.1–2. Contaminants Evaluated in Cooling Systems at Selected Power Plants

Power Plant	Cooling System	Contaminants	References
Dresden	Cooling lake and spray canal	Chlorine, tritium, heavy metals	NRC 2004a; Exelon 2003
Oyster Creek	Once-through cooling	Chlorine, tritium, VOCs	NRC 2007b
Palisades	Mechanical draft cooling tower	Chlorine, tritium, bromine, oil	NRC 2006d
Peach Bottom	Once-through cooling with towers	Chlorine, tritium, strontium	NRC 2003a; Exelon 2001
Pilgrim	Once-through cooling	Chlorine, tritium, heavy metals	NRC 2007c
Turkey Point	Closed-cycle canal	Chlorine, tritium	NRC 2002b; FPL 2000
Vermont Yankee	Once-through cooling and towers	Chlorine, copper, iron, zinc	NRC 2007a
Wolf Creek	Closed-cycle cooling pond	Chlorine, tritium	WCNOC 2002; WCGS 2003

Contaminants investigated to be of potential concern in the liquid effluent associated with cooling systems at nuclear power plants include chlorine and other biocides, tritium, heavy metals, volatile organic compounds (VOCs), oil products, and strontium. The concentrations of these contaminants have been found to be low within the liquid effluent discharged from the nuclear power plants. Although water screening guidelines have not been established for terrestrial biota, compliance with NPDES permits ensures that nonradioactive contaminant concentrations discharged from the cooling system are low enough to have only small impacts on water quality and aquatic communities. Although these requirements are not designed specifically to be protective of terrestrial biota, the water concentrations of contaminants associated with cooling systems are much lower than the lowest concentrations known to have adverse effects on terrestrial organisms. For instance, chlorine-contaminated drinking water begins to damage the cells of laboratory rodents at concentrations as low as 25 to 30 parts per million (ppm) (EPA 1989), whereas Carlton et al. (1986) found no effects of chlorine concentrations of 1, 2, or 5 ppm on the growth or reproductive capabilities of laboratory rats. The NPDES permits at nuclear power plants limit chlorine discharges to a maximum of 0.2 ppm, which is less than those concentrations reported to have no adverse effects on laboratory animals. At the Wolf Creek plant in Kansas, the use of a biocide (chlorine) in the cooling system was predicted to cause periodic mortality to organisms in the discharge area of the plant's cooling lake (Wolf Creek Lake). It was estimated that 0.68 to 1.08 mg/L of total residual chlorine was required to be discharged in order for any negative impacts on aquatic or terrestrial organisms to be observed. Impacts on terrestrial species could include toxicity

effects of chlorine as well as potential reductions in availability of aquatic food species. However, the implementation of the NPDES limits the discharge of biocides to a maximum of 0.2 mg/L (WCNOC 2002), thus ensuring that the impacts of the discharge of biocides in the cooling system effluent on aquatic and terrestrial organisms are minimal.

From a review of the 2006 RER reports for the power plants, quarterly tritium releases in liquid effluent may be as high as 1.69×10^{-5} µCi/mL. These concentrations do not exceed the public health-regulated tritium concentrations specified in 10 CFR 20, Appendix B, Table 2, which is set at 0.001 µCi/mL for water effluent concentrations. Tritium concentrations discharged in liquid effluent are much lower than those reported to have adverse effects on terrestrial wildlife. For example, Cahill et al. (1975) exposed rats to 1, 10, 50, or 100 µCi/mL of tritium in drinking water per day. They found that rats exposed to the higher doses (50 and 100 µCi/mL) experienced shorter life spans, whereas no adverse chronic effects were observed in rats at the two lower doses (1 and 10 µCi/mL). Therefore, the discharge of contaminants on terrestrial resources during the license renewal term is considered to be of small significance.

In the operation of the cooling system, contaminants (e.g., heavy metals) may be leached from condenser tubing and discharged by the power plant's cooling system. Elevated concentrations of these contaminants are toxic to aquatic and terrestrial organisms. In the past, the use of copper alloy condenser tubes in the cooling systems at the H.B. Robinson plant in South Carolina and Diablo Canyon plant in California resulted in the discharge of copper in the liquid effluent, which was observed to have adverse effects on the morphology and reproduction of resident bluegill populations (Harrison 1985). Terrestrial wildlife that feed on these fish in the receiving waters could be exposed to elevated copper levels. Also, potential reductions in populations of prey species could affect predator species. However, the replacement of the copper alloy condenser tubes with tubes made of different materials (e.g., titanium) has rectified this problem.

Thermal impacts on terrestrial habitats or wildlife exposed to elevated temperatures have not been identified at the nuclear power plants; however, as noted above, the growth of plants along portions of cooling pond shorelines may be restricted by high-temperature effluents. Temperature increases in receiving water bodies due to effluent discharges are regulated through NPDES permits to limit the extent of temperature increases for the protection of biota. In addition, because the plant communities present have been influenced by many years of facility operation, the elevated temperatures are unlikely to result in mortality of wetland and riparian plants that may be exposed to the discharges because species that are intolerant of elevated temperatures are unlikely to be growing near the outfall. The heated effluents could lengthen the growing season for wetland or riparian plant communities present. A potentially beneficial effect of the heated discharges at the Turkey Point plant in Florida has been the development of suitable habitat for the American crocodile (*Crocodylus acutus*), an established population of which occupies the cooling canal system. In addition, ice-free open water areas

that provide foraging opportunities for the bald eagle (*Haliaeetus leucocephalus*) and various waterfowl species are often maintained by heated discharges during winter months at a number of nuclear plants in northern states. These benefits would be expected to continue during the license renewal term.

The impingement of waterfowl at the cooling water intakes has been observed at some nuclear plants, such as the Cook plant in Michigan, the Nine Mile Point plant in New York, and the Point Beach plant in Wisconsin. About 400 ducks, primarily lesser scaup (*Aythya affinis*), were impinged at the D.C. Cook plant in December 1991 (Mitchell and Carlson 1993); about 100 ducks, both greater scaup (*Aythya marila*) and lesser scaup, were impinged in January 2000 at the Nine Mile Point plant (NRC 2006e). At Point Beach, a number of double-crested cormorants (*Phalacrocorax auritus*) were impinged in September 1990, and 33 birds (mostly gulls) were impinged from June 2001 through December 2003 (NRC 2005b). Changes in operational procedures, such as the periodic cleaning of zebra mussels off intake structures, and changes in intake structure design, have been implemented to minimize the impacts on waterfowl. It is likely that any impingement over the license renewal term would result in only minor effects on waterfowl populations.

Groundwater quality can be degraded by contaminants present in cooling ponds and cooling canals. Deep-rooted terrestrial plants could be exposed to these contaminants. In addition, biota could be exposed to contaminants at locations of groundwater discharge, such as wetlands or riparian areas. However, as noted above, contaminant concentrations are typically very low, and any effects on terrestrial plants would be expected to be small. Mitigation may also be implemented where sensitive resources could be affected. At the Turkey Point plant in Florida, for example, the flow of hypersaline groundwater from the cooling canals toward the Everglades to the west is prevented by an interceptor ditch, located along the west side of the canal system, from which groundwater inflow is extracted (NRC 2002b).

Surface water or groundwater that is withdrawn by nuclear power plants may potentially reduce the availability of water to terrestrial biota, such as those associated with wetlands or riparian areas along surface water bodies used as sources of cooling water, or those supported by groundwater discharges to wetlands or riparian areas. For once-through cooling systems, flow reductions from consumptive use generally represent a small decrease in water availability and have not resulted in water use conflicts for terrestrial resources. For example, losses due to the operation of the cooling system at the Peach Bottom plant in Pennsylvania, which operates as a once-through system with helper cooling towers, represent less than 2 percent of the minimum monthly average river flow of the cooling water source (NRC 2003a). However, for some closed-cycle systems, consumptive water use may result in conflicts with requirements for the protection of riparian, wetland, or other communities, primarily where the nuclear plants are located on small bodies of water or small streams. Although water withdrawal rates are much lower for closed-cycle systems (which require makeup water as a result of evaporative losses)

than for once-through systems, consumptive losses may be relatively high. Because of restrictions imposed on water withdrawal and consumption rates, which are protective of biotic resources, reductions in plant operations may be required under certain conditions when there are low water levels, such as during droughts. During extensive droughts, temporary impacts on riparian and wetland communities could occur.

Impacts on terrestrial biota associated with the operation of the cooling system have not been reported as a problem at any of the nuclear power plants evaluated. No adverse effects on terrestrial plants or animals have been reported as a result of increased water temperatures, fogging, humidity, or reduced habitat quality. Because of the low concentrations of contaminants within the liquid effluents associated with the cooling systems, the uptake and accumulation of contaminants in the tissues of wildlife exposed to the contaminated water or aquatic food sources are not expected to be a significant issue, and the impacts are expected to be small for all plants. Potential mitigation measures would include regular monitoring of the cooling systems for water quality and measures to exclude wildlife from contaminated ponds. On the basis of these considerations, the NRC concludes that the impact of continued operation of the cooling systems on terrestrial resources would be small for all nuclear plants and is considered a Category 1 issue.

Cooling Tower Impacts on Vegetation

Continued operation of cooling towers could affect vegetation during the license renewal term. This issue applies only to operating nuclear power plants with cooling towers. The issue is a combination of two issues evaluated in the 1996 GEIS: (1) impacts of cooling tower drift on agricultural crops and ornamental vegetation and (2) impacts of cooling tower drift on terrestrial ecology. Impacts of cooling tower emissions on these resources were considered to be small for all plants and were designated as Category 1 issues in the 1996 GEIS.

As discussed in Section 3.6.1, terrestrial habitats in the vicinity of nuclear power plant cooling towers have been exposed to deposition of cooling tower drift particulates (including salt), deposition of water droplets on vegetation from drift, structural damage from freezing vapor plumes, and increased humidity. Drift contains small amounts of particulates that are dispersed from cooling towers over a wide area, with particulates from natural draft towers dispersing over a larger area and at a lower deposition rate than from mechanical draft towers (NRC 1996). However, most of the deposition from cooling towers occurs in relatively close proximity to the towers. Generally, deposition rates from these cooling towers have been below those that are known to result in measurable adverse impacts on plants, and no deposition effects on agricultural crops or plant communities have been observed at most of the nuclear power plants (NRC 1996). Exceptions have been observed at some nuclear plants; however, the impacts have been addressed by changes to cooling tower operations. For example, high levels of sulfate deposition, along with temporary excessive icing conditions at the Palisades plant on the

southeast shoreline of Lake Michigan, resulted in the loss of about 5 ac (2 ha) of dune forest near the cooling towers and its replacement with a dense scrub-shrub community within several years of the startup of operations (NRC 2006b). These conditions were subsequently resolved by changes made to the cooling system.

Salt deposition from cooling tower drift is a potential impacting factor that can affect coastal power plants that use high-salinity water for cooling. The only such nuclear plant is the Hope Creek plant in New Jersey, which has natural draft cooling towers and withdraws cooling water from the Delaware River estuary (see Section 3.3.2 for a discussion of Hope Creek cooling tower drift emissions). High rates of deposition on plants or soil can result in injury to plants from acute effects and may result in changes to plant communities from chronic effects (Talbot 1979). Salt-tolerant species may increase in abundance, while sensitive species may decrease. Some salt-tolerant species are invasive and may become dominant in affected areas. However, no measurable effects from cooling tower drift on plant communities in the vicinity of Hope Creek have been observed (NRC 1996). The Palo Verde plant in Arizona uses cooling water with somewhat elevated salt concentrations. Studies have detected elevated levels of salt in plant leaves near the plant; however, the studies showed that no changes to native plants or crop production occurred (see Section 3.3.2 for a discussion of cooling tower drift emissions from the Palo Verde plant).

Impacts from icing have been rare, minor, and localized near nuclear power plant cooling towers and have been corrected by changes in tower operation at the plants where they occurred. For example, icing damaged oak trees adjacent to the cooling towers at the Prairie Island plant in Minnesota, changing the tree canopy structure and reducing acorn viability. Changes in tower operations eliminated the impacts (NRC 1996). Impacts from increased humidity have not been observed at nuclear power plants.

The continued operation of nuclear power plants would not be expected to result in increases in deposition rates from cooling towers or the accumulation of deposition constituents in soils. Because of the solubility of these materials, they are generally removed through precipitation. Plant communities in the vicinity of cooling towers have been exposed to many years of cooling tower operations, and are unlikely to change during the license renewal term. Any effects of icing during the renewal period would continue to be rare, minor, and localized. On the basis of these considerations, the NRC concludes that the impact of continued operation of cooling towers on plant communities would be small for all nuclear plants and is considered a Category 1 issue.

Bird Collisions with Cooling Towers and Transmission Lines

This section addresses the issue of avian mortality resulting from collisions of birds with natural draft cooling towers and transmission lines at nuclear power plants. Natural draft towers, which

are tall structures (usually taller than 100 m [330 ft]), cause some mortality, whereas mechanical draft towers, which are smaller (usually shorter than 30 m [100 ft]), cause negligible mortality (NRC 1996). Because of these facts, mechanical draft towers are not addressed here. The impacts from birds colliding with cooling towers and transmission lines were evaluated by reviewing the primary literature for avian collision mortality associated with all types of man-made objects, as well as the results of monitoring studies conducted at six nuclear plants. The magnitude of the impact of the mortality caused by cooling towers is determined by examining the actual numbers and species of birds killed and comparing this mortality with the total avian mortality resulting from other man-made objects relative to bird population size.

Throughout the United States, it has been estimated that millions of birds are killed each year when they collide with man-made objects, including cooling towers, radio and television towers, buildings, vehicles, wind generation facilities, transmission lines, and numerous other objects (Erickson et al. 2001). Many of these deaths can be considered unlawful take under the Endangered Species Act or the Migratory Bird Treaty Act. Bird mortality resulting from collisions with man-made structures is of concern if the stability of the local or migratory population of any bird species is threatened or if the reduction in numbers within any bird population significantly impairs its function within the ecosystem.

The number of collision-related bird deaths varies, depending on the type of man-made object. For example, Table 4.6.1.1–3 shows the estimated annual bird collision mortality in the United States. Collisions with buildings and windows account for the greatest number of collision mortalities annually, whereas wind generation facilities account for the least number of collision-related deaths (Table 4.6.1.1–3; Erickson et al. 2001). These estimates differ largely as a result of the density of the man-made structures in the study areas. It is estimated that more than 98 million commercial and residential buildings exist across the United States (Klem 1990; Erickson et al. 2001); compare this number with the number of wind turbines, which is less than 20,000 in 29 States (Manville 2005).

There are nearly 100,000 communication towers registered with the Federal Communications Commission (FCC 2003), some of which have been observed to cause a large number of avian collision mortalities (Able 1973; Kemper 1996; Crawford and Engstrom 2001). Most of these large mortality events at communication towers occur at night during spring and fall migration periods involving songbirds that appear to become confused by tower lights (Taylor and Kershner 1986; Larkin and Frase 1988; Manville 2005). For example, a single television tower in northern Florida, Crawford and Engstrom (2001) reported more than 44,000 bird collision mortalities over a 29-year period. Communication towers involved with the most bird collisions are tall (exceeding 1000 ft [305 m]), illuminated at night with incandescent lights, guyed, and located near wetlands and bird migration pathways (Manville 2005). During nights of heavy

Table 4.6.1.1–3. Estimated Annual Bird Collision Mortality in the United States

Source	Annual Mortality[(a)]
Vehicles[(b)]	60 million to 80 million
Buildings and windows[(c)]	98 million to 980 million
Powerlines[(d)]	10,000 to 174 million
Communication towers[(e)]	4 million to 50 million
Wind generation facilities[(f)]	10,000 to 40,000

(a) Estimated annual mortality was extrapolated from literature reviews.
(b) Includes automobiles, trains, and airplanes.
(c) Includes buildings and attached structures such as smokestacks and windows.
(d) Includes all electric communication lines and transmission lines.
(e) Includes radio, television, cellular, microwave, and public safety towers.
(f) Includes wind turbines and supporting structures.
Source: Erickson et al. 2001

cloud cover or fog, the incandescent lights illuminating the communication towers may attract migrating songbirds to the towers, increasing the likelihood of collisions. Compared to communication towers, cooling towers at nuclear power plants are shorter (less than 650 ft [200 m]) and are illuminated with low-intensity light sources (1.0 ft candle or less), such that migrating birds may not be as attracted to them, thus decreasing the likelihood of collision.

Natural draft cooling towers and transmission lines create collision hazards for migratory and local bird species. Monitoring of bird collisions has been done at several nuclear plants with natural draft cooling towers, including the Susquehanna plant on the Susquehanna River near Berwick in eastern Pennsylvania, the Davis-Besse plant on the shore of Lake Erie in north central Ohio, the Beaver Valley plant on the Ohio River in extreme western Pennsylvania, the former Trojan plant on the Columbia River in extreme northwestern Oregon, the Three Mile Island plant near Harrisburg in southeastern Pennsylvania, and the Arkansas plant on Dardanelle Lake in northwestern Arkansas. The following information regarding those plants was obtained from nuclear plant annual monitoring reports and from Temme and Jackson (1979).

At the Susquehanna plant, surveys were conducted on weekdays during the spring and fall bird migrations from 1978 through 1986. (Unit 1 began operating in 1983 and Unit 2 came online in 1985.) The plant's natural draft towers are 165-m (540-ft) tall and illuminated at the top with 480-V aircraft warning strobe lights. About 1500 dead birds (total for all survey years, an average of 166 per year) representing 63 species were found; they had apparently collided with the cooling towers. Other birds were probably lost in the tower basin water during plant operation. Most of the birds were songbirds. Fewer collisions seemed to occur during plant

operation, when cooling tower plumes and noise may have frightened birds away from the towers.

At Davis-Besse, extensive surveys for dead birds were conducted from fall 1972 to fall 1979. Early morning surveys at the 152-m-tall (499-ft-tall) cooling tower were made almost daily from mid-April to mid-June and from the first of September to late October. After the tower began operating in the fall of 1976, some dead birds were lost through the water outlets of the tower basin. A total of 1561 dead birds were found, an average of 195 per year. The dead birds included 1229 at the cooling tower, 224 around Unit 1 structures, and 108 at the meteorological tower. Most were night-migrating songbirds, particularly wood-warblers (family Parulidae), vireos (*Vireo* spp.), and kinglets (*Regulus* spp.). Waterfowl that were abundant in nearby marshes and ponds suffered little collision mortality. Most collision mortalities at the cooling tower occurred during years when the cooling tower was not well illuminated (1974 to spring 1978). After the completion of Unit 1 structures and installation of many safety lights around the buildings in the fall of 1978, collision mortality was significantly reduced (average of 236 per year from 1974 through 1977, 135 in 1978, and 51 in 1979). This reduction was accomplished by installing low-intensity light sources (1.0-ft-candle or less) to illuminate the cooling tower, which allowed birds to see and avoid it. It appears that the lights at nuclear plants do not confuse birds to the extent that lights on radio or TV towers sometimes do.

At Beaver Valley, surveys were conducted at the natural draft tower in the spring and fall seasons from 1974 through 1978. A total of 27 dead birds were found. At the Trojan plant, surveys were conducted weekly in 1984 and 1988 at the 152-m-tall (499-ft-tall) cooling tower, meteorological tower, switchyard, and generation building. No dead birds were found. At the 113-m-tall (371-ft-tall) cooling towers at Three Mile Island, 66 dead birds were found from 1973 through 1975. No dead birds were found at the Arkansas plant, where monitoring at the natural draft tower was done twice weekly from October 15 through April 15 in 1978–79 and 1979–80.

The available data on cooling-tower collision mortality suggest that cooling towers at nuclear power plants cause only a very small fraction of the total annual bird collision mortality from all sources. A very high percentage of all collision mortalities occur during the spring and fall bird migration periods and involve primarily songbirds migrating at night. The relatively few nuclear power plants in the United States that have natural draft towers (24 towers at operating nuclear power plants), combined with the relatively low bird mortality at individual natural draft towers, indicates that (1) bird populations are not greatly affected by collisions with nuclear power plant cooling towers and (2) the contribution of cooling towers to the cumulative effects of bird collision mortalities is very small. Mechanical draft cooling towers, which are not nearly as tall as natural draft towers, pose little risk to migrating birds.

Because the frequency of avian mortality resulting from collisions with cooling towers is small for any species, it is unlikely that the losses would threaten the stability of local migratory bird

populations or result in a noticeable impairment of the function of a species within local ecosystems. There is no reason to believe that the annual mortality rate resulting from collision of birds with any cooling tower would be different during the license renewal term. Mitigation measures may include illuminating the natural draft cooling towers at night with low-intensity lights so birds can see the towers and avoid collisions. Because cooling towers represent only a small part of total bird collision mortality, it is not expected that there will be any incremental impact on bird populations from cooling tower collision mortality as a result of license renewal. The impact from bird collisions with cooling towers during the license renewal term was considered to be small for all nuclear plants and was designated as a Category 1 issue in the 1996 GEIS. No new information has been identified in the plant-specific SEISs prepared to date or the literature that would alter that conclusion.

The potential for birds to collide with transmission lines depends on a number of factors, such as bird species, migration behavior, and location and physical characteristics of the transmission line (Bevanger 1988; Janss 2000; Manville 2005). Larger-bodied bird species such as raptors are more likely to collide with transmission lines (Harness and Wilson 2001; Manville 2005), whereas smaller-bodied birds such as migrating songbirds are more likely to collide with towers (Temme and Jackson 1979). This difference is most likely the result of differences in the behavior of raptors and songbirds. Raptors are known to use utility structures as perch locations and nest sites more often than do songbirds (Blue 1996; Manville 2005), whereas nocturnal migrating songbirds may become confused by the lights on communication towers (Crawford and Engstrom 2001). Lights are not a contributing factor in bird collisions at transmission lines because lights are not generally used to mark transmission lines.

It is unknown to what extent bird populations are negatively affected by deaths caused by collisions with transmission lines. Generally, bird mortality resulting from collisions with transmission lines has appeared to be only a small fraction of total mortality; therefore, it has not been considered to have significant population impacts (Stout and Cornwell 1976; Banks 1979). However, rare, threatened, or endangered species may be affected by transmission lines, particularly if the lines pass through areas where such species are concentrated (Sergio et al. 2004; Sundar and Choudhury 2005). There are no reports of relatively high collision mortality occurring at the transmission lines associated with nuclear power plants in the United States. The length of transmission lines associated with nuclear plants is considerably less than the total 500,000 mi (800,000 km) of transmission lines estimated within the United States (Manville 2005). Therefore, transmission lines associated with nuclear power plants are likely responsible for only a small fraction of total bird collision mortality.

Because the literature does not indicate there is a significant impact from collision mortality on overall species populations and because there are no known instances in which nuclear plant transmission lines have affected local bird populations, it is not expected that the mortality

resulting from bird collisions with transmission lines associated with nuclear plants and an additional 20 years of plant operation would cause long-term reductions in bird populations.

The impact of bird collisions with transmission lines during the license renewal term was considered to be small for all plants and was designated as a Category 1 issue in the 1996 GEIS. No new information was identified in the site-specific SEISs prepared to date or the literature that would alter that conclusion. On the basis of these considerations, the NRC concludes that the impact of bird collisions with cooling towers and transmission lines during the license renewal term would be small for all nuclear plants and remains a Category 1 issue.

Water Use Conflicts with Terrestrial Resources (Plants with Cooling Ponds or Cooling Towers Using Makeup Water from a River with Low Flow)

In the 1996 GEIS, water use conflicts water use conflicts included ecological impacts on aquatic and riparian communities. Water use conflicts with terrestrial resources in riparian communities could occur when water that supports these resources is diminished either because of decreased availability due to droughts; increased water demand for agricultural, municipal, or industrial usage; or a combination of such factors. For example, Wolf Creek uses Coffee County Lake for cooling (NRC 2008a). Makeup water for the lake is withdrawn from the Neosho River downstream of John Redmond Reservoir. The Neosho River is a small river with low water flow during drought conditions. The riparian communities downstream of this reservoir may be affected by the plant's water use during periods when the lake level is low and makeup water is obtained from the Neosho River. For the Wolf Creek plant, the water use conflict impact is small to moderate and a site-specificcondition. The potential range of impact levels at plants with cooling ponds or cooling towers using makeup water from a small river with low flow applying for license renewal in the future cannot be determined at this time. The NRC concludes that the impact of water use conflicts with riparian communities is a plant-specific Category 2 issue.

Transmission Line Right-of-Way (ROW) Management Impacts on Terrestrial Resources

This section evaluates the extent to which plant communities and wildlife populations could be affected by transmission line ROW management during the license renewal term at all nuclear power plants. This issue is a combination of two issues that were evaluated in the 1996 GEIS: (1) impacts of ROW management on terrestrial resources and (2) impacts of ROW management on floodplains and wetlands. Impacts on these resources were considered to be small for all plants and were designated as Category 1 issues in the 1996 GEIS.

Generally, ROW management involves clearcutting, selective cutting of tall woody vegetation, mowing, or herbicide application. These activities alter the physical features of vegetation communities by reducing vegetation height, density, and species diversity, which may impact

wildlife populations inhabiting those areas. The cutting of woody vegetation is usually not needed in grassland, desert, or shrub habitats, so associated impacts are not an issue there. Habitat quality in the ROW and nearby areas may be affected, and ROW management may affect local wildlife populations. Data on the effects of maintenance of transmission line ROWs specifically associated with nuclear power plants are not available, but the literature applies to such transmission lines because the methods used to maintain transmission line ROWs are similar for any transmission line ROW at any facility.

Plant communities are affected by the presence of maintained ROWs as well as other ongoing maintenance activities. The principal impacts associated with transmission line ROWs occur as a result of the initial clearing activities during transmission line installation. During installation, forested upland and wetland habitats in ROWs are typically converted to scrub-shrub communities, herbaceous upland, or emergent wetland types when trees are removed. Effects are less extensive where ROWs are established in grassland, desert, or shrub habitats. ROW effects extend beyond the area of direct disturbance. Transmission line ROWs established in otherwise undeveloped areas contribute to habitat fragmentation and affect the distribution of species in undisturbed areas along the corridors. The effects of habitat fragmentation associated with clearings and the creation of edges may continue to develop over a considerable period of time, since some species are lost while others become established (Saunders et al. 1991). Clearings in wooded areas tend to contribute to an increase in deer populations and increased access to forest interior areas (Alverson et al. 1988). The gradual loss of some plant species from these areas due to browsing may extend over many decades.

The operation of heavy equipment during ROW maintenance activities can result in soil compaction, affecting the establishment of some native plant species. ROW corridors occasionally provide a route for the introduction or expansion of invasive species populations into new areas. Significant changes in vegetation cover, such as removal of the tree canopy, and compaction of upland soils within the watershed of a wetland generally result in increased runoff and reduced infiltration to shallow groundwater, causing an increase or decrease in hydrologic input to nearby wetlands (EPA 1993, 1996; Wright el al. 2006). Effects include changes in the frequency or duration of inundation or soil saturation and greater fluctuations in wetland water levels. Runoff often contains sediments, contaminants from road and parking surfaces, or herbicides used in ROW or site vegetation management. Erosion of wetland substrates and plants can result from increased flow velocities that result from the changes in runoff and surface drainage patterns.

The presence of the ROWs would continue to affect the habitats within and adjacent to the transmission line corridors during the license renewal term; there would be more light and less soil moisture than found in undisturbed habitats. The plant communities that became established during the years of the initial operating license would generally remain altered communities, with a different species composition and community structure than undisturbed

habitats. In many areas, ROW management would prevent the development of mature plant communities. Plant species that are typically associated with high-quality, undisturbed native habitats and are intolerant of disturbed conditions would generally continue to be excluded from ROWs. Although species diversity may be high in these disturbed habitats, many of the species may be common or weedy native species or nonnatives. However, in some areas, rare or protected species that require open canopies, such as the golden sedge (*Carex lutea*), Cooley's meadowrue (*Thalictrum cooleyi*), and rough-leaf loosestrife (*Lysimachia asperulaefolia*), which occur within the Brunswick Steam Electric Plant ROWs in North Carolina, would continue to occur under the conditions existing within the ROWs. Invasive upland or wetland species that became established within the ROWs during the initial operating license would continue to exclude native species and reduce species diversity (BPA 2000). Invasive species populations may continue to expand unless aggressive management efforts are implemented.

Plant communities in and along ROWs are generally maintained in a modified condition for safe and efficient operation of the transmission lines. To protect the electric conductors, ROW management typically includes the periodic cutting of tall trees and application of herbicides. Tree cutting is a minor management activity in regions where tree growth in ROWs is limited, such as in grasslands, desert, or shrubland areas. Mowing is also frequently used as a management method to control the growth of woody species and promote the establishment of grassland or other herbaceous habitat types. Management activities and transmission line repair occasionally result in the erosion of exposed soils where vegetation has been removed or where soils are disturbed by equipment. Management activities that result in the disturbance, compaction, or exposure of soils may promote the establishment of invasive species (BPA 2000). Erosion of upland soils may result in sedimentation or increased turbidity in wetlands within the watershed. Herbicides used to manage undesirable species may drift onto nontarget species or affect wetland communities through runoff from treated areas (BLM 2007). The operation of heavy equipment in wetlands during ROW maintenance or transmission line repair can damage or compact wetland soils and vegetation.

Many of the nuclear power plants incorporate mitigation into their ROW management plans to protect wetlands or other sensitive or high-quality habitats. For example, within the ROWs of the Millstone plant in Connecticut, precautions are taken to protect and promote quality habitats. Herbicide use is prohibited within 10 ft of wetlands or surface water, and mowing is conducted only from November through April to protect saturated soils and minimize loss of fruit and seeds (NRC 2005c). ROW maintenance practices used at the Brunswick plant in North Carolina, such as methods of herbicide use, are designed to preserve and protect rare and listed plant species and sensitive natural areas known to occur within the ROWs. Established procedures are in place to protect rare and listed plant species if they are encountered by maintenance crews (NRC 2006b). At the Browns Ferry plant in Alabama, field studies are conducted to inventory and protect listed plant species and sensitive habitats. Species

populations are monitored, and habitats are managed and maintained. In the most sensitive areas, vehicles and equipment are prohibited, and all vegetation clearing is done by hand (NRC 2005d).

Most data on the impacts of transmission line ROWs on wildlife are for relatively moist areas of the United States where vegetation growth is rapid and vegetation must be controlled to prevent its interference with the transmission lines. In arid regions, little or no vegetation control is required, and the potential effects on wildlife are small. Potential effects are also small where lines cross croplands, because no vegetation management is required. The following discussion is therefore applicable primarily to forested regions where the utility must control vegetation on transmission line ROWs.

The maintenance of a transmission line ROW could directly affect wildlife as the result of (1) continued habitat loss or alteration; (2) displacement due to noise during maintenance activities; (3) mortality from maintenance equipment, conductors, or wires; (4) reduced mobility of some species, such as amphibians, across the cleared ROW; and (5) toxicity from herbicide or fuel spills. ROW creation establishes, and maintenance activities maintain, a new habitat type that divides a pre-existing and usually much larger habitat type, such as a forest (Yahner et al. 2004). The increased amount of edge along the boundary of the two habitats may affect wildlife by (1) increasing rates of predation among nesting birds, (2) restricting wildlife dispersal and migration patterns, (3) negatively affecting wildlife species that require large undisturbed areas, or (4) increasing local wildlife abundance and diversity.

Many studies identify the potential effects of ROW maintenance on wildlife populations. Transmission line ROWs may represent a barrier for species, such as large mammalian carnivores, that require large tracts of contiguous forested habitat (Crooks 2002). ROW maintenance may also have negative effects on smaller, less mobile wildlife species. For example, studies have shown that some amphibian species have difficulty crossing disturbed habitat and may experience increased rates of mortality as a result of physiological stress (Gibbs 1998; Rothermel 2004).

Traditionally, habitat edges have been considered to be beneficial to wildlife because species diversity is usually greater there (Yahner 1988). However, some species such as neotropical migrating songbirds that prefer interior forest habitat may be adversely affected by the increase in edge habitat associated with ROW clearings. These species require large blocks of forest for successful reproduction and survival (Wilcove 1988). Studies have found that nests of these bird species placed near edges are more likely to fail as a result of predation or nest parasitism than nests located near the forest interior (Paton 1994; Robinson et al. 1995). This failure is often due to an increase in the abundance of predators (e.g., skunks and raccoons) and nest parasites (e.g., brown-headed cowbirds [*Molothrus ater*] that lay their eggs in the nests of other birds), which are capable of proliferating in disturbed areas and edge habitats

(Evans and Gates 1997; Crooks and Soulé 1999). Increased predation and nest parasitism rates along edge habitats have reduced the populations of some neotropical bird species to the point where they have become locally extinct (Crooks and Soulé 1999).

Numerous studies indicate that wildlife populations can benefit from ROW management. Ongoing research on the effects of ROW management on wildlife has been conducted for more than 50 years at the State Game Lands 33 Research Project in Pennsylvania (Yahner 2004). Results of the studies conducted at that site indicate that long-term management of the ROW may provide an essential food source and cover habitat for insects, amphibians and reptiles, numerous bird species, and mammals such as black bear (*Ursus americanus*) and white-tailed deer (*Odocoileus virginianus*). Even species of concern, such as neotropical migrant birds, have been commonly observed using the brushy habitats provided by the ROW. Yahner et al. (2002, 2004) found that herbicide treatments in the ROW did not have any adverse effects on the nesting success of neotropical migrating bird species like the eastern towhee (*Pipilo erythrophthalmus*). King and Byers (2002) discovered that songbird nesting success was greater within the brushy ROW habitat than in nearby vegetation communities.

In a study of rodent populations in Oregon, Wolff et al. (1997) found higher densities of gray-tailed voles (*Microtus canicaudus*) in disturbed open habitats than in other habitats. They also found no effect of habitat disturbance on vole survival, reproductive success, or population size. Johnson et al. (1979) found that the diversity of small mammals was greater in ROW habitats than in adjacent forest habitats. There is also evidence that ROW maintenance can provide suitable habitat for some important insect populations, such as butterflies (Bramble et al. 1999). Thus, the management of ROW habitats may provide suitable habitat for a number of wildlife species, including some sensitive species such as neotropical migrant songbirds.

An important aspect of ROW management is the consideration of management strategies that limit the adverse effects on wildlife species. Herbicides are generally not highly toxic to wildlife when they are properly applied for ROW management. Therefore, toxic effects of herbicides on wildlife are generally of little concern to wildlife biologists or wildlife managers. Of the papers reviewed for this analysis, none expressed serious concern about toxic effects. In fact, some management techniques using herbicides have been proposed to maintain the function of the ROW and maximize the amount of suitable habitat for wildlife species. Yahner et al. (2002) proposed a phased approach to control the growth of undesirable plants, such as large trees, and maintain an early successional shrub-like plant community along the ROW. This objective could be accomplished through a combination of mechanical treatments (e.g., mowing) and selective herbicide applications. This approach could minimize the costs associated with vegetation management along a ROW and might be an important conservation tool for numerous wildlife species (Marshall and Vandruff 2002; Yahner et al. 2002).

The overall impact of transmission line ROW areas appears to be neither significantly adverse nor significantly beneficial. The consensus among wildlife biologists appears to be that although the initial habitat destruction associated with ROW clearing can have numerous consequences on wildlife populations, the proper management of transmission line ROW areas does not have significant adverse impacts on current wildlife populations, and ROW management can provide valuable wildlife habitats. Of the papers reviewed for this evaluation, none identified any significant impact of transmission line corridors on wildlife. The evidence supports a conclusion that continued ROW management during the license renewal term will not lower habitat quality or cause significant changes in wildlife populations in the surrounding habitat. On the basis of these considerations, the NRC concludes that the impact of continued transmission line ROW management on terrestrial resources is small for all nuclear plants and remains a Category 1 issue.

Effects of Electromagnetic Fields on Flora and Fauna (Plants, Agricultural Crops, Honeybees, Wildlife, Livestock)

The effects of electromagnetic fields on terrestrial biota are considered to be of small significance if the overall health, productivity, and reproduction of individual species appear unaffected.

The EMFs produced by operating transmission lines up to 1100 kV have not been reported to have any biologically or economically significant impact on plants, wildlife, agricultural crops, or livestock (Lee et al. 1989; Miller 1983). Areas under and in the vicinity of the lines have been studied numerous times. Vegetation, foliar damage due to EMF-induced corona at leaf margins, agricultural crop production, wildlife population abundance, livestock production, and potential livestock avoidance of the lines have been investigated. Also, many laboratory experiments with plants and laboratory animals have been conducted, often using electric fields much stronger than those occurring under transmission lines.

Plants – Studies have shown that minor damage to plant foliage and buds can occur in the vicinity of strong electric fields. For example, tree foliage and buds that are close to transmission lines can be damaged and upward or outward growth of branches can be reduced. Damage typically occurs only to the tips and margins of leaves in the uppermost plant parts that are the closest to the lines. The damage in the form of a leaf burn is most prevalent on small pointed leaves and is similar to leaf damage that might occur as a result of drought or other environmental stresses. The damage generally does not interfere with overall plant growth (Miller 1983).

The damage is thought to result from heating caused by induced corona at the leaf tips and margins. The electric field is greatly focused by leaf points or marginal teeth, thus increasing its strength to the point that corona (Section 4.6.1.3) occurs. Night-vision instruments have shown

this corona as a glow of light concentrated at leaf tips and margins. The damage apparently does not extend to lower levels of the plant because the electric field weakens with distance from the lines and because the upper plant parts shield the lower parts from the electric field.

In one experiment under an 1100-kV prototype line, the upward growth of alder and Douglas fir trees was reduced by this damage, with the result that the crowns of the trees became somewhat flattened on top and the overall crown developed a broader appearance than usual (Rogers et al. 1984). The growth of the lower parts of the trees and of lower-growing plants such as pasture grass, barley, and peas appeared unaffected (Rogers and Hinds 1983). In another experiment, 50-kV/m fields had no apparent effect on corn germination or the growth of corn seedlings; and the growth of corn, bluegrass, and alfalfa apparently was not affected by fields of 25–50 kV even though minor damage occurred to the outer fringes of the uppermost leaves (Bankoske et al. 1976). Germination of sunflower seeds in a 5-kV/m electric field was reduced by about 5 percent in some cases [4 out of 11 replicates (Marino et al. 1983)]. An experiment with several species of agricultural plants found that a maximum of about 1 percent of the total plant tissue was damaged by exposing the plants to 50-kV/m fields (Poznaniak and Reed 1978).

Lee et al. (1989) reviewed several papers reporting studies in Indiana, Tennessee, and Arkansas. The productivity of corn and other crop plants was not affected by electric fields of 12 to 16 kV/m under a 765-kV line and a UHV test line in Indiana, although plants under the larger line suffered some leaf tip damage from induced corona. Corn production in Tennessee may have been reduced by electric fields up to 8.5 kV/m, but the authors indicated the results were inconclusive. An Arkansas study found normal yields of rice and soybeans, but a 15 percent reduced yield of cotton beneath a 500-kV line (see Section 4.3.1.1). The researchers could not determine whether the reduced cotton yield resulted from electric field or ineffective aerial application of agricultural chemicals beneath the line.

Honeybees – Several studies have shown that honeybees in hives under transmission lines are affected by EMF (Greenburg et al. 1985; Rogers and Hinds 1983; Warren et al. 1981). Adverse effects include increased propolis (a reddish resinous cement) production, reduced growth, greater irritability, and increased mortality. These effects can be greatly reduced by shielding the hives with a grounded metal screen or by moving the hives away from the lines (Rogers and Hinds 1983; Lee 1980). Bindokas et al. (1988) showed that these impacts were not caused by direct effects of the electric fields on the bees but by voltage buildup and electric currents within the hives and the resultant shocks to bees. Bees kept in moisture-free nonconductive conditions were not adversely affected, even in electric fields as strong as 100 kV/m.

Wildlife and Livestock – Chronic exposure to EMF is experienced by small birds and mammals that primarily inhabit ROW corridors and by birds (primarily raptors) that nest in transmission

line towers. EMF exposures to larger animals and livestock are usually relatively brief because these animals inhabit relatively large areas instead of small areas beneath the lines. Exposures occur as these larger animals pass beneath the lines or as birds fly by the lines.

The voluminous literature on population studies of small bird and mammal species in transmission line corridors (presented earlier in this section) has expressed virtually no concern for possible impacts of EMF. These species apparently thrive underneath the lines, where their abundance appears to depend on habitat quality rather than on the strength of the electric fields to which they are exposed or the size of the line. For example, the density of breeding birds under 500-kV lines in eastern Tennessee is greater than that in adjacent forests (Kroodsma 1984, 1987) and appears to be greater than bird density in most grassland habitats or agricultural fields. Also, the density of small mammal populations near these lines appears to depend on habitat type rather than on the presence of the lines (Schreiber et al. 1976). A Minnesota study of a 500-kV line found little evidence of either a positive or negative effect of the power line on bird populations (Niemi and Hanowski 1984). Bird and small mammal populations under an 1100-kV line in Oregon were also apparently unaffected by line operations (Rogers and Hinds 1983). Habitat use by elk in western Montana was apparently unaffected by operation of a 500-kV line, as the elk used habitats along the power line in proportion to their availability (Canfield 1988).

Raptors, ravens, and some water bird species frequently nest and perch on transmission line towers, particularly in grassland areas where other suitable nest sites are lacking. Thus, the birds are able to use habitats without suitable nest sites – habitats that they otherwise would not have used (Gilmer and Stewart 1983; Williams and Colson 1989). On high-voltage lines supported by metal lattice towers, the birds usually nest on the top (bridge) of the tower where the strength of the electric field is minimal (e.g., 5 kV/m or less) (Lee 1980). Lee found 80 percent of 110 nests on towers to be located on the tower bridge and cited previous studies that showed similar results.

The success of these tower nests in producing young appears to be no different from nests located in areas not exposed to EMF. In central North Dakota, 113 ferruginous hawk nests in high-voltage transmission line towers (18 percent of a total of 628 nests found) had a higher success rate (87 percent) than nests in other locations (however, a hail storm that missed the lines reduced the success of some other nests). The number of fledglings per occupied nest was 2.8 for ground nests (which were larger than tower or tree nests), 2.6 for tower nests, 2.3 for haystack nests, and 2.0 for tree nests (Gilmer and Stewart 1983). In Idaho, Steenhof et al. (1993) studied nesting success of ravens and raptors on a 576-km (370-mile) segment of 500-kV transmission line constructed in 1981. From 1981 through 1989 (the last year reported by Steenhof et al. 1993), the numbers of these species nesting on transmission towers increased to 133 pairs, including roughly 64 percent common ravens, 21 percent red-tailed hawks, 9 percent ferruginous hawks, 6 percent golden eagles, and 0.3 percent great

horned owls. Nesting success of these birds averaged 65 percent to 86 percent and was similar to or better than that of the same species nesting on other structures. Lee (1980) reported finding 110 hawk and raven nests on 260 miles of 230-kV and 500-kV lines of the Bonneville Power Administration. Although the success of these nests was not monitored, the author reported that, based on a literature review, it was unlikely that nesting would be adversely affected by EMF found in most locations in transmission line towers.

Livestock in both field and laboratory studies have shown no significant impacts when exposed to EMF. Lee et al. (1989) reviewed about 10 reports on effects of transmission lines on livestock in the United States and Sweden. These studies found no evidence that the growth, production, or behavior of beef and dairy cattle, sheep, hogs, or horses were affected by EMF. The studies involved 11 farms along a 765-kV line in Indiana, 55 dairy farms near 765-kV lines in Ohio, 36 herds of cattle near 400-kV lines in Sweden, a mail survey of 106 farms in Sweden, a study of fertility of 58 cows under a 400-kV line in Sweden compared with 58 in a control area, 30 swine raised beneath a 345-kV line in Iowa compared with 30 raised in a control area, and cattle behavior under an 1100-kV prototype line in Oregon. Cattle under the 1100-kV test line in Oregon were startled by the first occurrence of corona noise when the line was reenergized after a reactor shutdown period (Rogers and Hinds 1983). From 1977 through 1981, grazing of cattle in pasture under the line appeared to be unaffected by line operation. In 1980–1981, the cattle spent more time near the line during periods when it was deenergized than when it was operating, but spent an increasing amount of time under the line when it was operating as the growing season progressed (Rogers and Hinds 1983).

In the Indiana study (Amstutz and Miller 1980), performance of livestock frequently under a 765-kV line on 11 farms was studied during a 2-year period (1977–1979; 9 farms participated for the full 2 years). Animals included 10 horses, 55 sheep, 149 beef cattle, 337 hogs, and 429 dairy cattle. Maximum field voltage levels recorded near ground level were about 9.1 kV/m. General health, behavior, and performance of the animals were not affected by the transmission line EMF.

In the Swedish study of cow fertility, 58 heifers were exposed to a 400-kV, 50-Hz transmission line from June to mid-October 1985 (Algers and Hultgren 1987). The length of exposure was 15 to 20 times longer than the average exposure per year for Swedish dairy herds exposed to 400-kV lines. No effects were observed on the frequency of malformations, the length or variation of the estrous cycle, the midcycle plasma progesterone level, the intensity of estrus, the number of inseminations per pregnancy, the overall conception rate, or the fetal viability. Previous studies of cattle showed no significant effects of EMF on reproduction.

Conclusion – No significant impacts of EMF on terrestrial biota have been identified. Although foliage very close to lines can be damaged, the overall productivity and reproduction of native and agricultural plants appear unaffected. Also, no evidence suggests significant impacts on

individual animals or wildlife populations that are chronically exposed to EMF under transmission lines or in the towers. Livestock behavior and production also appear unaffected by line operation. Therefore, the potential impact of EMF on terrestrial biota is expected to be of small significance for all plants. The only potential mitigation would be to exclude plants and animals from the right of way, a measure with very severe impacts of its own. However, because the impact is of small significance and because mitigation measures could create additional environmental impacts and would be costly, no mitigation measures beyond those implemented during the current term license would be warranted. This is a Category 1 issue.

4.6.1.2 Aquatic Ecology

Continued operations of the nuclear power plants during the 20-year license renewal term includes the operation of the cooling system (once-through, cooling ponds, or cooling towers), transmission line ROW maintenance, releases of gaseous and liquid effluents, facility maintenance, and refurbishment-related construction activities. Aquatic organisms would continue to be subject to impingement, entrainment, thermal discharges, chemical and radiological contaminants, and erosion and sedimentation. This section considers eleven issues concerning impacts of the proposed action on aquatic resources:

- Impingement and entrainment of aquatic organisms at plants with once-through cooling or cooling ponds (combination of three issues from the 1996 GEIS: (1) impingement of fish and shellfish, (2) entrainment of fish and shellfish in early life stages, and (3) entrainment of phytoplankton and zooplankton);

- Impingement and entrainment of aquatic organisms at plants with cooling towers (combination of three issues from the 1996 GEIS: (1) impingement of fish and shellfish, (2) entrainment of fish and shellfish in early life stages, and (3) entrainment of phytoplankton and zooplankton);

- Thermal impacts on aquatic organisms of plants with once-through cooling or cooling ponds (combination of five issues from the 1996 GEIS: (1) heat shock, (2) cold shock, (3) thermal plume barrier to migrating fish, (4) distribution of aquatic organisms, and (5) premature emergence of aquatic insects);

- Thermal impacts on aquatic organisms of plants with cooling towers (combination of five issues from the 1996 GEIS: (1) heat shock, (2) cold shock, (3) thermal plume barrier to migrating fish, (4) distribution of aquatic organisms, and (5) premature emergence of aquatic insects);

- Effects of cooling water discharges on dissolved oxygen and gas supersaturation (combination of three issues from the 1996 GEIS: (1) gas supersaturation, (2) low dissolved oxygen in the discharge, (3) and eutrophication);

- Effects of non-radiological contaminants on aquatic organisms (issue modified from the 1996 GEIS – accumulation of contaminants in sediments or biota – to include contaminant effects other than just accumulation);

- Impact of radionuclides on aquatic organisms (new issue not considered in the 1996 GEIS);

- Impact of dredging on aquatic organisms (new issue not considered in the 1996 GEIS);

- Water use conflicts with aquatic resources (plants with cooling ponds or cooling tower using makeup water from a river with low flow);

- Refurbishment impacts on aquatic resources (issue in the 1996 GEIS);

- Impacts of transmission line ROW management on aquatic resources (new issue not considered in the 1996 GEIS);

- Losses from parasitism, predation, and disease among organisms exposed to sublethal stresses (issue in the 1996 GEIS); and

- Stimulation of nuisance organisms (e.g., shipworms) (issue in the 1996 GEIS).

Impingement and Entrainment of Aquatic Organisms

Impingement occurs when organisms are held against the intake screen or netting placed within intake canals. Most impingement involves fish and shellfish. Table 4.6.1.2–1 lists some of the fish species commonly impinged at power plants. At some nuclear power plants, other vertebrate species may also be impinged on the traveling screens or on intake netting placed within intake canals. These include five species of sea turtle: loggerhead (*Caretta caretta*), green (*Chelonia mydas*), Kemp's ridley (*Lepidochelys kempi*), leatherback (*Dermochelys coriacea*), and hawksbill (*Eretmochelys imbricata*). Impingement of these sea turtles has occurred at the Diablo Canyon and San Onofre plants on the California coast and at the Salem, Oyster Creek, Brunswick, St. Lucie, and Crystal River plants on the Atlantic coast (Gunter et al. 2001). Waterfowl have also been impinged at several plants; examples are double-crested cormorants (*Phalacrocorax auritus*) at Point Beach plant in Wisconsin (NRC 2005b), lesser scaup (*Aythya affinis*) at Cook in Michigan (Mitchell and Carlson 1993), and lesser scaup and greater scaup (*A. marila*) at Nine Mile Point in New York (NRC 2006d). Isolated incidents of impingement or other impacts from power plants have been reported for other vertebrates, such as the American crocodile (*Crocodylus acutus*) at Turkey Point in Florida and the West Indian manatee (*Trichechus manatus*) at Turkey Point and St. Lucie in Florida (Gunter et al. 2001). Small numbers of harbor (*Phoca vitulina*), gray (*Halichoerus grypus*), harp (*Pagophilus groenlandicus*), and hooded (*Cystophora cristata*) seals have been impinged at Seabrook in New Hampshire (NMFS 2002). Impingement impacts are expected to continue during the license renewal term. The impacts of impingement are different for once-through and closed-cycle cooling systems and are therefore discussed separately below.

Impingement

Impingement is the entrapment of all life stages of fish and shellfish on the outer part of an intake structure or against a screening device during periods of water withdrawal (40 CFR § 125.83).

Entrainment

Entrainment is incorporation of all life stages of fish and shellfish with intake water flow entering and passing through a cooling-water intake structure and into a cooling water system (40 CFR § 125.83).

Entrainment occurs when planktonic organisms pass through the intake screens and travel through the condenser cooling system. Aquatic organisms that can be entrained include ichthyoplankton (fish eggs and larvae), larval stages of shellfish and other macroinvertebrates, zooplankton, and phytoplankton. Table 4.6.1.2–1 lists fish species commonly entrained at power plants. In addition to the entrainment of fish and shellfish in early life stages, the entrainment of a phytoplankton and zooplankton was evaluated in the 1996 GEIS, and entrainment was categorized as a Category 1 issue for all cooling systems. This issue has been combined with the issue of entrainment of fish and shellfish in early life stages in this

GEIS revision. Entrainment impacts are expected to continue during the license renewal term. The impingement and entrainment are different for once-through and closed-cycle cooling systems and are therefore discussed separately below.

Table 4.6.1.2–1. Fish Species Commonly Impinged or Entrained at Power Plants

Ecosystem Type	Fish Species
Rivers	Alewife (*Alosa pseudoharengus*)
	Gizzard shad (*Dorosoma cepedianum*)
	Common carp (*Cyprinus carpio*)
	White bass (*Morone chrysops*)
	Sunfish (*Lepomis* spp.)
	Crappie (*Pomoxis* spp.)
	Yellow perch (*Perca flavescens*)
	Freshwater drum (*Aplodinotus grunniens*)
Great Lakes	Alewife (*Alosa pseudoharengus*)
	Gizzard shad (*Dorosoma cepedianum*)
	Yellow perch (*Perca flavescens*)
	Rainbow smelt (*Osmerus mordax*)
Estuaries	Bay anchovy (*Anchoa mitchilli*)
	Tautog (*Tautoga onitis*)
	Atlantic menhaden (*Brevoortia tyrannus*)
	Gulf menhaden (*Brevoortia patronus*)
	Winter flounder (*Pleuronectes americanus*)
	Weakfish (*Cynoscion regalis*)
Oceans	Bay anchovy (*Anchoa mitchilli*)
	Striped anchovy (*Anchoa hepsetus*)
	Silver perch (*Bairdiella chrysura*)
	Cunner (*Tautogolabrus adspersus*)
	Scaled sardine (*Harengula jaquana*)
	Queenfish (*Seriphus politus*)

Impingement and Entrainment of Aquatic Organisms at Plants with Once-Through Cooling and Cooling Ponds

In the 1996 GEIS, the NRC considered that for plants with a once-through cooling systems or cooling ponds, the impacts of impingement and entrainment of aquatic organisms were small at many plants but moderate to large at a few nuclear plants. Therefore, impingement and entrainment were considered Category 2 issues. For plants that operate in a hybrid mode, impingement and entrainment would be small at most nuclear plants, but could be moderate or large at a few plants, and were also considered Category 2 issues.

Impingement is more of a concern at nuclear plants that have once-through cooling because these plants require a larger amount of water than plants that operate under closed-cycle (NRC 1996). Impingement monitoring at the Palisades nuclear power plant in Michigan demonstrated this difference. In 1972, when the plant used once-through cooling, 654,000 fish were impinged yearly at a water withdrawal rate of 400,000 gpm. In 1976, cooling towers were added to the plant, and it began operating as a closed-cycle plant. Intake withdrawal rate was reduced to 78,000 gpm, and impingement dropped to 7200 fish per year (Consumers Energy Company and Nuclear Management Company 2001). McLean et al. (2002) reported that the magnitude of impingement at Maryland power plants with similar intake designs within Chesapeake Bay differed greatly according to the location of the intake.

Impingement at the Quad Cities plant in Illinois is often an order of magnitude higher from February through April than during summer and fall, even though the cooling water intake flow is only half that of the rest of the year (Bodensteiner and Lewis 1992). Impingement at Quad Cities was primarily composed of young-of-year and juveniles; in the case of gizzard shad (*Dorosoma cepedianum*) and freshwater drum (*Aplodinotus grunniens*), fish of these ages cannot tolerate near-freezing to freezing temperatures during winter and early spring. Other species, such as the bluegill (*Lepomis macrochirus*), channel catfish (*Ictalurus punctatus*), and white bass (*Morone chrysops*), are also prominent in winter impingement collections (Bodensteiner and Lewis 1992, 1994; LaJeone and Monzingo 2000). Although the number of fish impinged at Quad Cities was relatively high (e.g., nearly 3 million in 1989), most (up to 90 percent) of the fishes that entered the intake forebay were dead or moribund. Therefore, even if these fish were not impinged, they would have still been lost from the fishery (LaJeone and Monzingo 2000). Similar results have been noted for impingement of threadfin shad (*D. petenense*) at the McGuire plant in North Carolina (NRC 2002c) and gizzard shad at the Summer plant in South Carolina (NRC 2004b).

For the Pilgrim plant in Massachusetts, the NRC concluded that impingement during continued operation of the plant would have a moderate impact on the Jones River population of the rainbow smelt (*Osmerus mordax*) on the basis of an observed decline of that population,

uncertainty about the stock's status, impingement rates, and low impingement survivability. Impingement had a small to moderate impact on all other species (NRC 2007c).

For the Wolf Creek plant in Kansas, the NRC concluded that impingement during continued operation of the plant could have small to moderate impacts at the makeup water screen house during periods when river water levels were low, because fish would have less available habitat to use as a refuge and would likely be exposed to greater pumping frequency and volume removals from the Neosho River (NRC 2008a). During most of the license renewal term, the impacts of impingement would be small (NRC 2007d).

Various methods that have been used to reduce impingement include returning impinged fish to the water source, bypassing fish at the intake screens, and preventing the approach of fish to the intake area (Lieberman and Muessio 1978). Various deflection methods that have been used at power plants to reduce impingement include physical barriers, visual stimuli (e.g., air-bubble screens and static or strobe lights), water velocity and pressure changes, electrical shocks, and sound (Maes et al. 2004). Stocking, restoring habitat, and installing cooling towers are also mitigation options.

At the Doel nuclear power plant on the Scheldt Estuary in Belgium, an acoustic deterrent system decreased total impingement of estuarine fishes by about 60 percent. Avoidance response varied among species from no effect to highly efficient (Maes et al. 2004). As observed at most plants that have used sound deterrent, decreases in impingement at the Doel plant were most noticeable for clupeids, with a 94.7 percent decrease for the Atlantic herring (*Clupea harengus*) and 87.9 percent decrease for the European sprat (*Sprattus sprattus*) (Maes et al. 2004).

At the Fitzpatrick plant in New York, the sound deterrent system reduced the density of fishes near the intake by as much as 96 percent (Ross et al. 1993). Alewife (*Alosa pseudoharengus*) impingement was reduced by 81 to 84 percent during a year following an unusually cold winter and was predicted to reduce alewife impingement by 87 percent during most years (Ross et al. 1996). Similar decreases in alewife impingement have been observed at the D.C. Cook plant in Michigan (NRC 2005a) and Point Beach plant in Wisconsin (NRC 2005b). During or following unusually cold winters, alewife populations can experience high mortalities, so a proportion of the impinged alewives would undoubtedly consist of dead or moribund individuals. Also, a decline in an alewife's condition (e.g., after spawning) may result in a weaker response to sound systems, thus increasing its potential to be impinged (Ross et al. 1993; Dunning et al. 1992).

At the Surry plant in Virginia, about 94 percent of all fish impinged were returned alive to the river through the fish return system. Only five species had less than 80 percent survival. These were the spot (*Leiostomus xanthurus*), Atlantic menhaden (*Brevvortia tyrannus*), blueback

herring (*A. aestivalis*), threadfin shad, and bay anchovy (*Anchoa mitchilli*) (NRC 2002d). These species generally are susceptible to physical injuries while impinged (e.g., because of their delicate scales). A mitigation program at St. Lucie involves Florida Power and Light Company periodically trapping fish from the intake canal, tagging them, and releasing them in the ocean. The goal is to tag and release 1000 fish per year (NRC 2003a). At the Calvert Cliffs plant in Maryland, about 5.25 million blue crabs (*Callinectes sapidus*) were impinged between 1975 and 1982, but impingement survival was 99 percent (NRC 1999b).

Physical stresses present during impingement are affected by screen wash frequency, screen rotation speed, and screen modifications intended to reduce stress associated with fish separation and handling. When screens are infrequently washed, impinged organisms may become moribund from repeated attempts to free themselves and may suffocate against the screen (Jinks 2005). Generally, species with heavier skeletal structures, thick scales or bony scutes, thick protective slimes, or hard exoskeletons are most likely to resist physical injury and desiccation during impingement (Jinks 2005).

Although fish return systems can decrease impingement mortality, some stressed and injured fish returned to the water body may take a number of days to die. Even those with minor damage may develop a bacterial or fungal infection that eventually leads to mortality. Also, returned fish may be exhausted, disoriented, and damaged, which makes them more susceptible to predation (Henderson et al. 2003). Replacing conventional intake screens with Ristroph screens is unlikely to result in a significant reduction in impingement mortality at localities where clupeid and sciaenid species predominate (Henderson et al. 2003).

While planktonic organisms are generally not uniformly distributed throughout a water body, it is often assumed that withdrawal of a certain percentage of the source water would result in entrainment of that percentage of the planktonic organisms that pass by a plant (EPA 2002). At Browns Ferry in Alabama, the portion of the river flow that passed through the plant was found to be higher than the percentage of larval fishes in the river that were entrained (NRC 2005c). Fish species with free-floating early life stages are those most susceptible to entrainment (EPA 2002). For power plants (nuclear and fossil) located in the Great Lakes, the number of fish entrained increased with increasing power capacity (Kelso and Milburn 1979).

Entrained organisms are exposed to heat, mechanical, pressure, and chemical stresses (NRC 1996). Entrained organisms are basically exposed to a rapid temperature rise that is essentially equivalent to the temperature rise across the condensers during their passage through the plant (Schubel et al. 1977). It has been conservatively concluded that mortality of planktonic organisms is assumed to be 100 percent. For ichthyoplankton, this assumption is based on the extreme delicacy of eggs and the fact that their skeleton, musculature, and integument are soft, thereby providing only a minimal amount of protection for vital organs (EPA 2002). Nevertheless, these killed organisms provide food for consumers and

decomposers in the receiving water body (Fox and Moyer 1973). Conversely, bacteria and other microorganisms that are entrained may increase in number as a result of prolonged exposure to increased heat (Fox and Moyer 1973; see Section 3.9.3). At the Quad Cities plant in Illinois, LaJeone and Monzingo (2000) concluded that as long as discharge temperatures do not exceed 37.8°C (100°F), some entrainment survival would occur.

Fish eggs and larvae have a high natural mortality rate; thus, the number of entrained ichthyoplankton that would have survived to become adult fish is much lower than the number of eggs and larvae entrained (EPA 2002). In a laboratory study on the exposure of larval common shrimp (*Crangon crangon*) and lobster (*Homarus gammarus*) and adult copepods (*Acartia tonsa*) to simulated entrainment stresses (i.e., thermal, mechanical, chlorine, and pressure effects, both alone and in combination), it was concluded that most individuals of each species would survive passage through a nuclear power station under normal operating conditions. Since the experiments on these crustaceans demonstrated that each species has different responses to different stressors, the only generalization that could be made is that mortality from the totality of entrainment passage would be 10 to 20 percent (Bamber and Seaby 2004). About 70 percent of the copepod entrained at the Millstone plant in Connecticut suffered mortality, but this loss only represented 0.1 to 0.3 percent of the copepod production of eastern Long Island Sound (Carpenter et al. 1974). At the Calvert Cliffs plant in Maryland, entrainment survival for the five most abundant zooplankton species was 65 to 100 percent (NRC 1999b).

Except for one sample (when discharge temperatures at the D.C. Cook plant in Michigan exceeded 35°C [95°F] and resulted in a 14 to 22 percent mortality difference in zooplankton), there was no relationship between zooplankton mortality and discharge water temperatures, suggesting that mechanical stress was the major cause of zooplankton entrainment mortality. During the period of the study, chlorination was infrequent because entrained sand provided sufficient scouring action to negate the need for biocides. The sand may have added to the mechanical stress experienced by entrained zooplankton. Zooplankton mortality was significantly greater in the discharge waters than the intake waters, but differences averaged less than 3 percent. Such small losses due to entrainment cannot be detected in the lake. It was concluded that fish predation rather than entrainment was the major source of zooplankton mortality in inshore waters during most of the year (Evans et al. 1986).

Mitigation has been used to minimize entrainment losses. This includes several measures that also minimize impingement impacts (e.g., using closed-cycle cooling and designing intakes to minimize velocities through the intake screens). At the McGuire plant in North Carolina, about 45 percent of the cooling water is obtained from the low-level intake, which pulls water from the hypolimnion at a depth of about 30 m (100 ft), where few planktonic organisms occur. Therefore, entrainment is minimized (NRC 2002c). Skimmer walls inside the intake bays at the Robinson plant in South Carolina similarly reduce entrainment (NRC 2003b). At the Millstone

plant, potential mitigation measures that were identified included reducing intake flows during the winter flounder (*Pleuronectes americanus*) spawning season; conducting regular inspections, maintenance, or refueling during the spawning season; importing fish into the areas; installing fine mesh screens on the intakes; or installing cooling towers (NRC 2005c).[(a)]

On July 9, 2004, the EPA published a final rule in the *Federal Register* (EPA 2004b) that addressed cooling water intake structures at existing power plants, including nuclear plants, where flow levels exceed a minimum threshold value of 50 million gallons per day (gpd). The rule was Phase II in the EPA's development of CWA 316(b) regulations that established national requirements applicable to the location, design, construction, and capacity of cooling water intake structures at existing facilities that exceed the threshold value for water withdrawals. Section 316(b) of the CWA requires that the location, design, construction, and capacity of the cooling water intake structures reflect the best technology available for minimizing adverse environmental impacts. On July 9, 2007, the EPA (2007a) published a suspension of regulations establishing requirements for cooling water intake structures at Phase II existing facilities. As a result, all permits for Phase II facilities should include conditions under Section 316(b) of the CWA that are developed on a best professional judgment basis. Best professional judgment is used by NPDES permit writers to develop technology-based permit conditions on a case-by-case basis by using all reasonably available and relevant data. Any site-specific mitigation required under the NPDES permitting process would result in a reduction in the impacts of continued plant operations.

In the 1996 GEIS, the NRC considered the impacts of license renewal on impingement and entrainment of aquatic organisms to be small, moderate, or large at plants with once-through cooling or cooling ponds (i.e., a Category 2 issue). No new information has been identified in the plant-specific SEISs prepared to date or in the literature that would alter those conclusions.

On the basis of these considerations, the NRC concludes that the impingement and entrainment of aquatic organisms over the license renewal term at nuclear plants with once-through cooling or cooling ponds could be small, moderate, or large and is considered a Category 2 issue. The magnitude of the impact would depend on plant-specific characteristics of the cooling system (including location, intake velocities, screening technologies, and withdrawal rates) and characteristics of the aquatic resource (including population distribution, status, management objectives, and life history).

[(a)] It should be noted that the NRC cannot impose mitigation requirements on licensees. The Atomic Safety and Licensing Appeal Board, in the "Yellow Creek" case, determined that the EPA has sole jurisdiction over the regulation of water quality with respect to the withdrawal and discharge of waters for nuclear power stations, and it also determined that the NRC is prohibited from placing any restrictions or requirements on the licensees of those facilities with regard to water quality (Tennessee Valley Authority [Yellow Creek Nuclear Plant, Units 1 and 2], ALAB-515, 8 NRC 702, 712-13 [1978]).

Impingement and Entrainment of Aquatic Organisms at Plants with Cooling Towers

Removal of any substantial volume of water from a natural body of water by a cooling system will likely also remove or kill some of the aquatic organisms that live there through impingement or entrainment. However, the number of individuals that could be removed from a population before detectable negative effects would occur is often not known. The potential for impingement and entrainment of aquatic organisms is influenced by a variety of factors such as:

- Amount of water withdrawn relative to the size of the cooling water source,
- Location and configuration of intake structures,
- Type of water body from which water is withdrawn and the conditions within that water body,
- Proximity of withdrawal structures to sensitive biological habitats (e.g., spawning and nursery habitats),
- Sensitivity of populations of impinged and entrained organisms to potential losses of individuals, and
- Mitigation measures in place to reduce impingement and entrainment.

Of these factors, the volume of water withdrawn relative to the size of the water source appears to be the best predictor of the number of organisms that would be impinged or entrained within a given aquatic system (Henderson and Seaby 2000). Because the volume of water withdrawn by a power plant is minimized when a closed-cycle cooling system is employed, the impacts to aquatic organisms from impingement and entrainment would be smaller than the impacts from impingement and entrainment that would occur if a once-through cooling system was employed instead.

In the 1996 GEIS, the NRC determined that impingement and entrainment of fish and shellfish was a Category 1 issue for plants with cooling towers, because the level of impingement and entrainment of fish and shellfish with this type of cooling system was not found to be a problem at operating plants, and was not expected to be a problem during the license renewal term (NRC 1996). This finding was also based on the lower rates of water withdrawal required for plants with cooling towers when operating in a closed-cycle mode. Withdrawal rates would not be reduced in situations where cooling towers are used in a helper mode to cool discharge

temperatures under once-through operating conditions. These types of systems are included under the evaluation of once-through systems above.

In considering the impingement and entrainment effects of closed-cycle cooling systems on aquatic ecology, the NRC evaluated the same issues that were evaluated for plants with once-through cooling systems or cooling ponds. On the basis of reviews of the literature and license renewal SEISs published to date, reduced populations of aquatic biota attributable to occurrences of impingement and entrainment have not been reported for any existing nuclear power plants with cooling towers operated in closed-cycle mode.

On the basis of these considerations, the NRC concludes that the impingement and entrainment of aquatic organisms at plants with cooling towers operating as a closed-cycle cooling system over the license renewal term would be small and remains a Category 1 issue.

Effects of Thermal Discharges on Aquatic Organisms

During the license renewal term, aquatic resources would continue to be affected by thermal discharges from the cooling system. The potential impacts of thermal discharges are different for once-through and closed-cycle cooling systems and are therefore discussed separately below.

Thermal Impacts on Aquatic Organisms (Plants with Once-Through Cooling and Cooling Ponds)

In the 1996 GEIS, the NRC determined that for plants with a once-through cooling system or cooling ponds, the effects of thermal discharge on aquatic biota (primarily due to heat shock) was small at many plants. However, because the effects were considered moderate or large at a few nuclear plants, heat shock was considered a Category 2 issue that required a site-specific assessment before license renewal. The potential for thermal discharge effect is considered to be greatest at plants with once-through cooling systems (NRC 1996), primarily because of the higher discharge temperatures and larger thermal plume area.

The potential impacts of thermal discharges during the 20-year license renewal term were evaluated by reviewing published site ERs, license renewal SEISs, and the scientific literature. For all of these plants, it was determined that the impacts of thermal discharges during the license renewal term were small. However, according to York et al. (2005), thermal discharges from the Diablo Canyon and San Onofre plants (located along the California coast) have had significant impacts on aquatic habitats. (Both of these plants employ once-through cooling systems and have not yet been reviewed for license renewal.) Thus, thermal discharges could be a concern during the license renewal term for plants with once-through cooling systems, especially for plants located in areas where restoration efforts are underway to increase fish

populations or reestablish migratory fish species or where thermal discharge plumes could encompass otherwise high-quality habitats.

In general, adverse thermal environmental effects have been minimized at many power plants through design features, such as locating the discharge structures in areas where warmer water would be rapidly diluted (Beitinger et al. 2000). The potential for thermal discharge impacts is greatest in shallow, enclosed, and/or poorly mixed water bodies (Hall et al. 1978).

Heat shock occurs when the water temperature meets or exceeds the thermal tolerance of a species. The duration of exposure to elevated temperatures is a major factor contributing to heat shock (NRC 2007e). In most situations, fish are capable of moving out of an area as their thermal tolerance limits are approached. However, occasional heat shock events have been reported at some nuclear power plants. At the Pilgrim plant in Massachusetts, only two fish mortality incidents that could be attributed to heat shock have occurred. In 1975, about 3000 Atlantic menhaden were killed, and in 1978, about 2300 clupeids (schooling fish such as menhaden sardines, and shad) were killed (NRC 2007e). At the McGuire plant in North Carolina, five dead striped bass (*Morone saxatilis*) were found in and near the discharge; their deaths may or may not have been related to heat shock (NRC 2002c). About 300 dead fish, mostly striped bass, were killed when cooling lake temperatures near the La Salle County Station in Illinois exceeded 35°C (95°F). A similar heat shock event happened at the Braidwood Nuclear Station's cooling lake when about 1000 fish, mostly gizzard shad, died (NRC 2005f).

Cold shock can occur when organisms acclimated to the elevated temperatures of a thermal plume are abruptly exposed to temperature decreases when the artificial source of heating stops. Such events are most likely to occur during winter. Cold shock events have only rarely occurred at nuclear plants (e.g., Haddam Neck [no longer operating], Prairie Island, Monticello, and Oyster Creek). Fish mortalities usually involved only a few fish and did not result in population-level effects (NRC 1996). Gradual shutdown of plant operations generally precludes cold shock events.

The potential exists for thermal plumes to create a barrier to migrating fishes if the mixing zone covers an extensive cross-sectional area of a river and exceeds the fish avoidance temperature (NRC 1996). For example, concerns were expressed that thermal discharge from the Vermont Yankee plant could effect both spawning and outmigration of American shad (*Alosa sapidissima*) and Atlantic salmon (*Salmo salar*) and potentially cause a reduction in Atlantic salmon smoltification, particularly since a hydroelectric facility was located immediately downstream of the plant and because the fish passage facility and thermal discharge were located on the same side of the river (NRC 2007a). In the 316(b) demonstration to support increased discharge temperature limits at the Vermont Yankee plant, it was determined that the smolts would not be delayed because the thermal plume covered only a small cross section of

the Connecticut River. To date, significant impacts on migratory fishes have not been reported for nuclear power plants.

Heated effluents could accelerate the development of immature stages of aquatic insects in freshwater systems, resulting in premature emergence. If adults emerge before the normal seasonal cycle, they may be unable to feed or reproduce. Premature emergence has been observed in laboratory investigations (e.g., Nebeker 1971) but not in field investigations (e.g., Langford 1975). Heated effluents could also stimulate population growth of macroinvertebrates. Thermal discharges from the Oconee plant in South Carolina stimulated the population growth of oligochaetes (aquatic worms) in the immediate vicinity of the power plant (less than 5 percent of the total cooling reservoir surface). However, the local changes in oligochaete populations could not be linked to the direct increases in water temperatures, but they may have been directly or indirectly affected by increases in zooplankton, vegetation, and current velocities in the area of the discharge (Nichols 1981).

Sublethal effects from thermal discharges (e.g., stunning or disorientation of fishes) could alter predator-prey interactions by increasing the susceptibility of affected individuals to predation. Schubel et al. (1977) concluded that the exposure of fish larvae (e.g., blueback herring, American shad, striped bass) to an excess of 15°C (59°F) in temperature would significantly increase their vulnerability to predation. However, population- or community-level effects from power plant influences on predator-prey relationships have not been demonstrated in the field (NRC 1996). Malnutrition is also a chronic effect that fish can experience when overwintering within thermal plumes (Hall et al. 1978). Thermal discharges have also been hypothesized to increase the susceptibility of fishes to diseases and parasites as a result of a combination of the increased density of fish within the thermal plume (potentially leading to increased exposure to infectious diseases or other stresses), the fish being more prone to infection in warmer water, and the ability of diseases and parasites to develop faster at higher temperatures. Other potential temperature-related impacts on aquatic resources could include the loss of smolt characteristics in salmon (McCormick et al. 1999) or premature spawning (Hall et al. 1978). These sublethal effects would be related to a multitude of cumulative activities that can occur with an aquatic ecosystem and cannot be attributed to a single stressor.

Thermal discharges can allow nuisance species, such as the Asiatic clam (*Corbicula fluminea*) and zebra mussel (*Dreissena polymorpha*), to become established or proliferate (NRC 1996). The heated discharges from the Oyster Creek plant in New Jersey increased the distribution and abundance of a nonnative, tropical-subtropical, wood-boring shipworm species (*Teredo bartschi*). However, this species has not been observed in Oyster Creek or Barnegat Bay since 1982, possibly because of a combination of low winter temperatures that occurred in Oyster Creek during a station outage, the pathological effects of a parasite, the removal of a substantial amount of driftwood, and the replacement of untreated structural wood (NRC 1996). At the North Anna plant in Virginia, the higher water discharges related to plant operation were

found to increase the growing season of the water hyacinth (*Hydrilla verticillata*). Nuisance levels of this plant resulted. The water hyacinth was brought under control by stocking triploid (sterile) herbivorous grass carp (*Ctenopharyngodon idella*) (NRC 2002e).

Mitigative measures that have been employed to reduce thermal discharge effects include lowering the effluent temperatures before discharges reach the receiving water body (e.g., the cooling pond at the Dresden plant in Illinois or the cooling canal system at the Turkey Point plant in Florida) or enhancing rapid mixing and heat dissipation (e.g., high-velocity jet diffusers at Fitzpatrick in New York) (NRC 1996). At the Surry plant in Virginia, the thermal discharge was located about 6 mi (9.7 km) upstream of the intake structure to protect downstream oyster beds from potential thermal discharge impacts (NRC 2002d). Fish kills that occurred in the 1980s within the discharge canal at the Summer plant in South Carolina were eliminated by removing a hump in the discharge canal, limiting reservoir drawdowns, and dredging the discharge canal (NRC 2004b).

In the 1996 GEIS, the NRC considered the impacts of heat shock on aquatic biota during the license renewal term to be small, moderate, or large at plants with once-through cooling or cooling ponds (i.e., a Category 2 issue), and it considered the impacts of cold shock, interference with fish migration, distribution of aquatic organisms, and premature emergence of aquatic insects to be small for all plants (i.e., Category 1). No new information that would alter those conclusions was identified in the plant-specific SEISs prepared to date or in the literature.

On the basis of these considerations, the NRC concludes that the impact of thermal discharges on aquatic organisms at nuclear plants with once-through cooling systems or cooling ponds over the license renewal term could be small, moderate, or large, and is considered a Category 2 issue. The magnitude of the impact would depend on plant-specific characteristics of the cooling system (including location and type of discharge structure, discharge velocities and volume, and three-dimensional characteristics of the thermal plume) and characteristics of the aquatic resource (including the species present and their physiology, habitat, population distribution, status, management objectives, and life history).

Thermal Impacts on Aquatic Organisms (Plants with Cooling Towers)

In the 1996 GEIS, the NRC determined that for plants with cooling towers, the effects of thermal discharges (including heat shock, cold shock, interference with fish migration, distribution of aquatic organisms, and premature emergence of aquatic insects) on aquatic biota were Category 1 issues because thermal effects associated with this type of cooling system were not found to be a problem at operating plants and are not expected to be a problem during the license renewal term (NRC 1996). This finding was based, in part, on the presence of smaller thermal plumes at plants with closed-cycle cooling towers than would occur if a once-through cooling system was used at those plants.

In considering the thermal discharge effects of closed-cycle cooling systems on aquatic resources, the NRC evaluated the same issues that were evaluated for the once-through systems discussed above. On the basis of reviews of the literature and license renewal SEISs published to date, it was determined that these potential effects would not significantly reduce the population of aquatic organisms near any existing nuclear power plants.

In the 1996 GEIS, the NRC considered the impacts of thermal discharges on aquatic organisms during the license renewal term to be small at nuclear plants with cooling towers (i.e., a Category 1 issue). No new information has been identified in the plant-specific SEISs prepared to date or in the literature that would alter those conclusions. On the basis of these considerations, the NRC concludes that the impact of thermal discharges on aquatic organisms at nuclear plants with cooling towers over the license renewal term would be small and remains a Category 1 issue.

Effects of Cooling Water Discharge on Dissolved Oxygen, Gas Supersaturation, and Eutrophication

The potential effects on aquatic biota from low dissolved oxygen levels, gas supersaturation, and eutrophication in the cooling water discharge of nuclear power plants were identified as Category 1 issues in the 1996 GEIS. These three issues are combined and discussed together here.

The availability of oxygen is a requirement for the metabolism of aerobic organisms. It also influences inorganic chemical reactions. For aquatic organisms with gills, the concentration of dissolved oxygen in the water is one of the most important parameters to consider for evaluating water quality. In general, dissolved oxygen concentrations of less than 3 ppm in warmwater habitats or less than 5 ppm in coldwater habitats can adversely affect fish (Morrow and Fischenich 2000). Oxygen dissolves into water via diffusion from the surrounding air, by aeration (i.e., mixing with atmospheric air due to turbulent movement of the water), and as a product of photosynthesis. The level of dissolved oxygen in water is highly dependent on

temperature, and the amount of oxygen that can dissolve in a given volume of water (i.e., the saturation point) is inversely proportional to the temperature of the water. Thus, when other chemical and physical conditions are equal, the warmer the water is, the less dissolved oxygen it can hold. An increase in water temperature also affects the amount of oxygen that aquatic organisms need by increasing the chemical reaction rates and metabolic rates. The rates of many chemical reactions in water approximately double for every 10°C (18°F) increase in temperature. Thus, the addition of a heat load to an aquatic ecosystem via the discharge of cooling water has the potential to stress aquatic biota by simultaneously increasing metabolic rates and the need for oxygen and by reducing dissolved oxygen concentrations to suboptimal levels.

The potential for effects on biota from a reduction in the dissolved oxygen concentration is greater in ecosystems where dissolved oxygen levels are already approaching suboptimal levels as a result of other factors that affect the environment. Thus, organisms in ecosystems where (1) the biological demand for dissolved oxygen is elevated as a result of increased levels of detritus or nutrients (e.g., eutrophication from runoff containing fertilizers or manure or from the release of dead, entrained organisms in the discharge of once-through cooling systems) or (2) low flow levels and high ambient temperatures already exist (e.g., as a result of drought conditions or hot weather) may be more susceptible to negative effects if dissolved oxygen levels are reduced further. For this reason, dissolved oxygen limits are regulated in many NPDES permits to ensure that minimum levels will be maintained.

After cooling water is discharged, additional oxygen dissolves in the water as a result of diffusion and the introduction of oxygen released by aquatic plants and algae is a by-product of photosynthesis (during daylight hours only). The saturation point for the water increases as it cools, and aeration due to turbulent movement can further increase the rate of oxygenation. For these reasons, effects on aquatic biota due to low dissolved oxygen levels are not expected to extend beyond the thermal mixing zone. Thus, even in cases where dissolved oxygen levels in the immediate vicinity of the discharge structures of power plants may be too low to support some aquatic biota, the amount of aquatic habitat affected is typically small relative to that available in the receiving water body as a whole. Discharge systems are typically designed to minimize the affected area by promoting mixing of introduced warmer water with ambient water from the receiving system, by increasing turbulence near the discharge point, or by introducing air into the water.

The impacts of low dissolved oxygen concentrations in the discharge are considered to be of small significance if populations of aquatic organisms in the vicinity of the plant are not reduced. On the basis of reviews of literature and operational monitoring reports, dissolved oxygen concentrations have been adequate for maintaining aquatic ecosystems in the water bodies that receive cooling water from currently operating nuclear power plants. Operational mitigation measures (increasing the oxygenation of water released from an upstream dam) have been

effective at the one plant (Sequoyah plant in Tennessee) for which periodic low dissolved oxygen levels in the receiving water (Chickamauga Reservoir) were identified as potentially affecting downstream mussel beds and sauger (*Sander canadensis*) reproduction during the initial license term.

In addition to the effects of cooling systems on dissolved oxygen described above, rapid heating of water in the condenser cooling system also decreases the solubility and saturation point for other dissolved gases. Thus, as the water passing through the cooling system is heated, the water becomes supersaturated with gases. Although the levels of dissolved gases will equilibrate to normal values as the water cools and mixes with ambient waters, tissues of aquatic organisms that remain in the supersaturated effluent for extended periods can become equilibrated to the increased partial pressures of gases within the effluent. If these organisms are subsequently exposed to water with lower partial pressures (which occurs when the water cools or when the organisms move to water in other locations or at other depths), dissolved gas (especially nitrogen) within the tissues may come out of solution and form embolisms (bubbles) within the affected tissues, most noticeably the eyes and fins. The resulting condition is known as gas bubble disease. Swelling and hemorrhages in tissues can cause behavioral abnormalities or death, depending on the number of bubbles that form and the tissues that are affected (Noga 2000). Fish mortalities generally occur at gas supersaturation levels above 110 to 115 percent (EPA 1986). Aquatic insects and crustaceans appear to be more tolerant of supersaturated water than fish (Nebeker et al. 1981).

The ability to detect and avoid supersaturated waters varies among species. A fish can avoid supersaturated waters by either not entering the affected area or by diving to avoid the onset of supersaturated conditions near the surface. Some species, however, may not avoid supersaturated waters until symptoms of gas bubble disease occur; at that point, some fish may already have been lethally exposed. Other species may be attracted to supersaturated waters due to stimuli such as warmwater discharges (Gray et al. 1983).

Gas supersaturation and gas bubble disease have resulted in the death of fish in the discharge of some steam-electric power plants, as has been reported in the past from the Pilgrim plant in Massachusetts (NRC 1996, 2007c). Gas supersaturation and gas bubble disease are also commonly associated with hydroelectric dams, typically resulting when water that is mixed with air while traveling over spillways is subsequently pushed to depth within stilling basins (Parametrix, Inc. 1975). The death of organisms due to gas supersaturation in heated effluents from power plants appears to be most likely at plants that have discharge canals where fish may reside for extended periods of time (i.e., long enough to equilibrate with supersaturated effluents). Gas solubility tends to increase with decreases in water temperatures; therefore, gas bubble disease at steam-electric stations would be most likely to occur during winter months (McInerny 1990). As reported in the 1996 GEIS, observed incidences of gas bubble disease at the Waukegan Generating Station (a coal-fired plant on Lake Michigan), Marshall

Steam Station (a coal-fired plant on Lake Norman), and the Pilgrim plant involved fish residing in discharge canals. At the Pilgrim plant, the loss of approximately 43,000 Atlantic menhaden in 1973 was attributed to gas bubble disease (McInerny 1990), and other species of fish may also have been affected (Fairbanks and Lawton 1977). Promoting the rapid mixing of effluents with receiving waters (e.g., with jet diffuser systems) appears to effectively prevent such mortalities by inhibiting residence of organisms in the thermal plume (Lee and Martin 1975) and by limiting the extent of the area where supersaturated conditions may occur. Restricting entry of fish into discharge canals may also be effective at controlling mortality. A fish barrier net was installed in the discharge canal at the Pilgrim plant after the mortality events observed during the 1970s, although subsequent implementation of engineering controls have mitigated conditions so that the use of the net has not been required since then.

Impacts from gas supersaturation are considered to be of small significance if populations of aquatic organisms in the vicinity of the plant are not reduced. On the basis of reviews of the available scientific literature, plant-specific ERs, and the SEISs that have been completed to date, deaths of aquatic organisms attributable to gas supersaturation have not been a concern at most existing nuclear power plants. Operational and structural mitigation measures have been effective at controlling effects on fish at the Pilgrim plant, where fish kills attributable to gas supersaturation occurred during the initial license period. In no case has a substantial effect on populations of aquatic organisms been observed. Use of engineering controls (e.g., use of jet diffusers for cooling water discharge systems) that prevent the occurrence of mortality due to gas bubble disease at individual power plants also reduces the likelihood that discharges from cooling systems would contribute to cumulative effects.

Unless the operation of the cooling system or the ambient conditions that affect levels of dissolved oxygen or gas supersaturation in the receiving waters were to change substantially, it is anticipated that there would be no change in effects of low dissolved oxygen concentrations or gas supersaturation on aquatic biota during the license renewal term. Overall, effects of low dissolved oxygen concentrations and gas supersaturation attributable to cooling water discharges are considered to be of small significance for all plants.

For some plants, the potential for effects of low dissolved oxygen concentrations or gas supersaturation on aquatic resources could be further reduced by changing from a once-through cooling system to a closed-cycle cooling system or by reducing the plant's generation rate. However, because the continued effects of operations on dissolved oxygen concentrations and gas supersaturation are considered to be of small overall significance to populations of aquatic resources and because implementation of these changes would be costly, it is believed that such changes are not warranted on the basis of controlling levels of dissolved gases. Impacts of license renewal on dissolved oxygen levels and on the incidence of gas bubble disease were considered to be small for all nuclear plants and were designated

as Category 1 issues in the 1996 GEIS. No new information has been identified in the plant-specific SEISs prepared to date or in the literature that would alter those conclusions.

On the basis of these considerations, the NRC concludes that the impact on aquatic biota from the alteration of dissolved oxygen levels and gas supersaturation associated with continued operations over the license renewal term would be small for all nuclear plants and remains a Category 1 issue.

Effects of Nonradiological Contaminants on Aquatic Organisms

The potential for nonradiological contaminants to accumulate in sediments or aquatic biota was identified as a Category 1 issue in the 1996 GEIS. This was originally raised as an issue of concern at a few power plants that used copper alloy condenser tubes, but this concern has been successfully mitigated by replacing copper alloy tubes with those made from other metals (e.g., titanium). An operating nuclear power plant can contribute other contaminants by concentrating existing constituents from the water body (e.g., in blowdown at closed-cycle plants) or by the addition of chemicals to cooling water during plant operations (e.g., biocides).

Biocides are used in cooling water systems to prevent the buildup of microorganisms that can impede heat transfer across heat exchange surfaces. Biocides are also used to prevent excessive growth of algae or other organisms that attach to structures, which can reduce cooling water flow by blocking pipes, tubing, and other water conveyances. For example, zebra mussels and Asiatic clams within the intakes or cooling systems of power plants can cause partial to total blockage of grates and pipes or cause damage to pipes and facilities, requiring the plants to temporarily suspend operations in order to remove the blockage or repair the damage. To prevent this from happening, plants in areas where these mollusks occur generally use nonoxidizing molluscicides (e.g., quaternary ammonium salts, glutaraldehyde, isothiazoline, triazine, and carbamates). The amount of a biocide that is applied to the cooling waters is controlled so that the concentrations that are discharged from the cooling system are too low to cause adverse effects to native mussels in the receiving water body. Allowable concentrations for biocides in discharged cooling waters are governed by NPDES permit restrictions to reduce the potential for toxic effects on nontargeted organisms (e.g., native mussels and fishes). At the Browns Ferry plant in Alabama, small sponge rubber balls are continuously recirculated through the condenser tubes to keep them clear of Asiatic clams and thus reduce the use of molluscicides (NRC 2005c). Also, various means can be used to minimize the discharged concentrations of biocides in the blowdown, including closing the blowdown valve before biocides are added, discharging blowdown to large sediment or retention ponds, and dechlorination (Veil et al. 1997).

As reported in the 1996 GEIS, heavy or toxic metals (e.g., copper, zinc, and chromium) may be leached from condenser tubing and other heat exchangers and discharged by power plants as

small-volume waste streams or corrosion products. Although heavy metals are found in small quantities in natural waters (and many are essential micronutrients), concentrations in the power plant discharge are typically controlled in the NPDES permit because excessive concentrations of heavy metals can be toxic to aquatic organisms. Discharge of metal and other toxic contaminants may also be subject to individual control strategies developed by the States to control toxic pollutants under the CWA. These strategies for point source discharges of toxic pollutants are implemented through the NPDES permit program. Heavy metal concentrations in discharges during normal operations are generally low. However, reactor shutdowns for testing and refueling keep stagnant water in contact with condenser tubes and other metal structures for extended periods and may allow abnormally large amounts of metals to be leached into the water.

The ability of aquatic organisms to bioaccumulate heavy metals, even at low concentrations, has led to concerns about toxicity both to the humans and biota that consume contaminated fish and shellfish. For example, the bioconcentration of copper discharged from the Chalk Point plant (a fossil fuel power plant on Chesapeake Bay) resulted in discoloration ("greening") effects on eastern oysters (*Crassotrea virginica*) (Roosenburg 1969), and the bioaccumulation of copper released from the Robinson plant in South Carolina resulted in malformations and decreased reproductive capacity among bluegill in the cooling reservoir. Replacement of copper alloy tubes with tubes made from other metals (e.g., titanium) alleviated the elevated copper levels in both of these cases (NRC 1996, 2003b).

Concentrations of heavy metals and other contaminants in the discharges of nuclear power plants are normally quickly diluted or flushed from the area by the large volumes of the receiving water. The discharge of metals and other toxic contaminants may also be subject to controls implemented by State or Federal agencies through the NPDES permit process. Impacts of contaminant discharges are considered to be of small significance if water quality criteria (e.g., NPDES permits) are not violated and if aquatic organisms in the vicinity of the plant are not bioaccumulating the contaminants.

The accumulation of contaminants in sediments and biota was designated as a Category 1 issue in the 1996 GEIS. No new information has been identified in plant-specific SEISs prepared to date or in the reviewed literature that would alter those conclusions. However, this issue has been modified to look at contaminant effects other than accumulation. As long as changes to the cooling system do not occur during the license renewal term and the discharge requirements of the NPDES permit are met, no impact of contaminants on aquatic biota would be anticipated. On the basis of these considerations, the NRC concludes that the impact of contaminants on aquatic organisms associated with continued operations would be small for all nuclear plants and remains a Category 1 issue.

Exposure of Aquatic Organisms to Radionuclides

The potential impacts of radionuclides on aquatic organisms from normal operations of a nuclear power plant during the license renewal term were not identified as an issue in the 1996 GEIS. However, the impact of radionuclides on aquatic organisms has been raised as an issue by the public for several of the plants that have undergone license renewal, and that issue is reviewed here.

Aquatic biota can be exposed externally to ionizing radiation from radionuclides in water, sediment, and other biota, and aquatic biota can be exposed internally via ingested food and water and, in certain situations, absorption through the skin and respiratory organs (Blaylock et al. 1993). No evidence of significant differences in sensitivity to radionuclides between marine and freshwater organisms has been reported (Blaylock et al. 1993). Some radionuclides tend to follow pathways similar to their nutrient analogs and can therefore be transferred rapidly through the food chain. These include (1) radionuclides such as strontium-90, barium-140, radon-226, and calcium-46 that behave like calcium and are therefore accumulated in bony tissues; (2) radionuclides such as iodine-129 and iodine-131 that act like stable iodine and accumulate in thyroid tissue; (3) radionuclides such as potassium-40, cesium-137, and rubidium-86 that follow the general movement of potassium and can be distributed throughout the body; and (4) radionuclides such as tritium, which resembles stable hydrogen, that are distributed throughout the body of an organism (Ahier and Tracy 1995).

Fish, especially developing eggs and young, appear to be the aquatic organisms that are the most sensitive to the effects of ionizing radiation, while phytoplankton and zooplankton are relatively resistant to effects from exposure (NCRP 1991; Blaylock et al. 1993). DOE's guideline for radiation dose rates from environmental sources recommends limiting the radiation dose to aquatic biota to no more than 1 rad/d (0.01 Gy/d). As described in Blaylock et al. (1993), this guideline was derived by reviewing the results of experimental data (NCRP 1991) that indicated there would not be any negative population-level effects on aquatic biota at doses up to 1 rad/d (0.01 Gy/d). That review reported that significant histological effects on the gonads of small tropical fish were detected at a dose of 1 rad/d (0.01 Gy/d), although the majority of controlled studies that examined the potential chronic effects of ionizing radiation on aquatic organisms did not find significant effects unless the dose was much greater than 1 rad/d (0.01 Gy/d) (NCRP 1991). Real et al. (2004) summarized several chronic irradiation studies on fish (mostly from gamma radiation at dose rates of 0.2 to 120 rad/d [0.02 to 1.2 Gy/d]) that reported effects, such as lowered fecundity, delayed spawning, reduced testis mass and sperm production, reduced immune response, reduced larval survival, and increased vertebral anomalies. They concluded that dose rates of less than approximately 10 rad/d (0.1 Gy/d) to any life stage are unlikely to affect survival (Real et al. 2004). Kryshev and Sazykina (1998) reported that ecological effects of ionizing radiation on aquatic biota occur at dose rates between 0.2 and 80,000 rad/d (0.002 and 800 Gy/d)]. For

comparison, Brown et al. (2004) used models to estimate doses to aquatic biota from naturally occurring radionuclides as ranging from 0.00024 to 0.11 rad/d (2.4×10^{-6} to 1.1×10^{-3} Gy/d) for European freshwater ecosystems and 0.00024 to 0.06 rad/d (2.4×10^{-6} to 6.0×10^{-4} Gy/d) for European marine waters.

Table 4.6.1.2–2. Estimated Radiation Dose Rates to Aquatic Animals from Radionuclides Measured in Water and Sediments at U.S. Nuclear Power Plants

Plant	Estimated Dose Rates (rad/d)[a]		
	Water	Sediment	Total
Arkansas Nuclear	1.87×10^{-4}	1.98×10^{-6}	1.89×10^{-4}
Browns Ferry	1.43×10^{-2}	2.88×10^{-5}	1.43×10^{-2}
Calvert Cliffs	1.53×10^{-7}	1.09×10^{-10}	1.54×10^{-7}
Columbia	5.01×10^{-2}	2.17×10^{-5}	5.01×10^{-2}
Comanche Peak	5.82×10^{-2}	1.03×10^{-4}	5.83×10^{-2}
D.C. Cook	5.01×10^{-2}	1.46×10^{-4}	5.02×10^{-2}
Hatch	5.02×10^{-2}	1.22×10^{-5}	5.02×10^{-2}
Fort Calhoun	1.06×10^{-1}	5.71×10^{-6}	1.06×10^{-1}
Indian Point	5.01×10^{-2}	2.03×10^{-5}	5.01×10^{-2}
Millstone	5.02×10^{-2}	5.73×10^{-4}	5.08×10^{-2}
Nine Mile Point	5.02×10^{-2}	1.02×10^{-5}	5.02×10^{-2}
Palisades	1.34×10^{-7}	3.65×10^{-6}	3.78×10^{-6}
Point Beach	2.67×10^{-3}	2.73×10^{-4}	2.95×10^{-3}
San Onofre	1.12×10^{-2}	3.00×10^{-4}	1.15×10^{-2}
Vermont Yankee	5.02×10^{-2}	1.11×10^{-3}	5.13×10^{-2}

(a) Dose rates were estimated with RESRAD-BIOTA (DOE 2004e) by using site-specific radionuclide concentrations in water and sediments obtained from REMP reports.

Dose rates for aquatic biota were calculated with the RESRAD-BIOTA dose evaluation model (DOE 2004e) using site-specific radionuclide concentrations in water and sediments reported in the REMP reports for 15 NRC-licensed power plants (Table 4.6.1.2–2). (See Section D.5 in Appendix D for a description of the methodology used.) These 15 plants represent plants with a range of radionuclide concentrations in environmental media. The total estimated dose rates for aquatic biota for these plants were all less than 0.2 rad/d (0.002 Gy/d), considerably less than the guideline value of 1 rad/d (0.01 Gy/d). Thus, it is anticipated that normal operations of these facilities would not result in negative effects on aquatic biota. Effects on populations of

aquatic biota from such doses would be small. A 25-year study of gamma-ray-emitting radionuclide levels near the Susquehanna plant in Pennsylvania indicated that there have been no known environmental impacts on aquatic resources (Patrick et al. 2007). On the basis of the reviewed literature and the dose rates that have been estimated for aquatic biota from site-specific data, the NRC concludes that the impact of radionuclides on aquatic biota from past operations would be small for all plants, and it would not be expected to change appreciably during the renewal period. Therefore, the impact of radionuclides on aquatic biota that would result from continued operations is considered a Category 1 issue.

Effects of Dredging on Aquatic Biota

Dredging is an activity that is performed at some power plants to remove accumulated sediments from intake and discharge areas (or, more rarely, to maintain barge slips) and may have localized impacts on aquatic biota. The impacts of dredging were not evaluated in the 1996 GEIS.

Sediment (especially sand and silt) that enters water bodies through the process of erosion can accumulate and gradually fill in some areas. Because of this, maintenance dredging may be required at some power plants to keep cooling water intakes and discharges clear of sediment (Allen et al. 2004; NRC 2007b,c). Dredging may also occur as part of power plant operation to maintain appropriate water circulation in water bodies that provide cooling water (e.g., at the Millstone plant; NRC 2005c) or to maintain access for barges (e.g., at the Calvert Cliffs plant in Maryland; NRC 1999b). Dredging can be accomplished in a number of ways (e.g., using various types of mechanical or hydraulic dredges), but it generally entails excavating a layer of sediment from the affected areas and transporting it to onshore or offshore areas for disposal.

Dredging can affect aquatic biota in a variety of ways. Except for some deep-burrowing animals or motile animals, such as larger crustaceans and fish, that may survive dredging through avoidance, it is assumed that organisms living on or in the affected sediments will be killed. Sediments suspended in the water column during dredging activities may settle onto and bury adjacent habitats, clog the feeding structures of filter-feeding organisms, or reduce light penetration. The potential for impacts on aquatic organisms as a result of direct effects of suspended sediment depends on the types of organisms present in the affected area, the amount and particle sizes of the sediment, and the duration of dredging activities (Nichols et al. 1990; Wilber and Clarke 2001).

The recovery of benthic communities in habitats disturbed by dredging depends, in part, on the characteristics of the remaining sediments (Diaz 1994; Haynes and Makarewicz 1982), the sources and types of organisms available to recolonize from surrounding areas, and the size of the disturbed area (Whitlatch et al. 1998). In soft-sediment environments, such as those that are most likely to require dredging in the vicinity of power plant intakes,

recovery of animal communities generally occurs relatively quickly (sometimes within weeks) especially if the dredged areas are relatively small (e.g., Diaz 1994). In some cases, however, recovery of benthic communities may take several years (e.g., Kaplan et al. 1975; Guerra-García et al. 2003). Recovery of benthic communities following dredging also tends to be faster in areas exposed to periodic disturbances, such as tidally influenced habitats (Diaz 1994).

Sediments in and around cities and industrial areas are often contaminated with a variety of pollutants. These pollutants are introduced to waterways from point sources such as combined sewer overflows, municipal and industrial discharges and spills, or may be introduced from nonpoint sources such as surface runoff and atmospheric deposition (EPA 2004a). Contaminants that have accumulated in buried layers of sediment are often less readily bioavailable or less chemically active (EPA 2004a). Depending on the concentrations of specific contaminants in accumulated sediments, there could be increased bioavailability and increased toxicity of those contaminants if they are resuspended in the water column due to dredging activities (Petersen et al. 1997; Su et al. 2002; EPA 2004a). On the basis of a review of the information in the ERs and SEISs that have been prepared for previous renewal applications, the levels of chemical and radionuclide contamination of sediments in the areas near power plant intakes and discharges that would need to be dredged are likely to be relatively low. For example, as reported in the SEIS for license renewal for the Pilgrim Nuclear Power Station in Massachusetts, the toxicity of sediments to marine organisms, which was evaluated prior to dredging the intake channel, was found to be low (NRC 2007c).

In general, maintenance dredging for nuclear power plant operations would occur infrequently, would be of relatively short duration, and would affect relatively small areas. For example, at the Peach Bottom Atomic Power Station in Pennsylvania, it is estimated that dredging of the intake basins is performed approximately once every 20 years and a total area of approximately 2.4 ha (6 ac) would need to be dredged (NRC 2003a). The intake and discharge canals at the Oyster Creek Nuclear Generating Station in New Jersey have been dredged approximately every 3 to 10 years (NRC 2007b), and the intake area for the Monticello Nuclear Generating Plant in Minnesota requires dredging every 6 to 8 years (NRC 2006c). It is anticipated that maintenance dredging would be primarily undertaken in areas containing soft sediments that would be recolonized fairly rapidly by benthic organisms in surrounding areas. In addition, permits from the USACE, State environmental agencies, or other applicable regulatory authorities would be required prior to initiating dredging. Site-specific evaluation of potential environmental impacts, including potential impacts on listed species of aquatic organisms, would be considered as part of the permitting process, and appropriate mitigation measures, if needed, could be identified and implemented.

Available scientific literature, plant-specific ERs, and the SEISs that were reviewed indicate that the effects of these dredging activities on populations or communities of aquatic organisms

would likely be small at all plants where they occur. On the basis of these considerations, the NRC concludes that the impact of dredging on aquatic resources would be small for all nuclear plants and is considered a Category 1 issue.

Water Use Conflicts with Aquatic Resources (Plants with Cooling Ponds or Cooling Towers Using Make-Up Water from a River with Low Flow))

In the 1996 GEIS, water use conflicts included ecological impacts on aquatic and riparian communities. Water use conflicts with aquatic resources in instream communities could occur when water that supports these resources is diminished either because of decreased availability due to droughts; increased water demand for agricultural, municipal, or industrial usage; or a combination of such factors.

Increased temperatures and/or decreased rainfall would result in lower river flows, increased cooling pond evaporation, and lowered water levels in the Great Lakes or reservoirs. Regardless of overall climate change, droughts could result in problems with water supplies and allocations. Because future agricultural, municipal, and industrial users would continue to share their demands for surface water with power plants, conflicts might arise if the availability of this resource decreased.

Water use conflicts with aquatic resources could occur when water to support these resources is diminished either because of decreased water availability due to droughts; increased demand for agricultural, municipal, or industrial usage; or due to to a combination of such factors. Water use conflicts with biological resources in instream communities is a concern due to to the duration of license renewal and potentially increasing demands on surface water.

For example, Wolf Creek uses Coffee County Lake for cooling (NRC 2008a). Makeup water for the lake is withdrawn from the Neosho River downstream of John Redmond Reservoir. The Neosho River is a river with low water flow during drought conditions. The aquatic communities in the Neosho River downstream include an endangered fish species, the Neosho madtom (*Noturus placidus*), that may be affected by the plant's water use during periods when the lake level is low and makeup water is obtained from the Neosho River. For the Wolf Creek plant, the water use conflict impact is small to moderate and a site-specific condition. The potential range of impact levels at plants with cooling ponds or cooling towers using makeup water from a river with low flow applying for license renewal in the future cannot be determined at this time. The impact of water use conflicts with instream communities is considered a plant-specific Category 2 issue.

Refurbishment Impacts on Aquatic Resources

Impacts on aquatic resources from refurbishment activities could occur at all operating nuclear power plants during the license renewal term as a result of (1) direct disturbance of aquatic habitats within project areas, (2) sedimentation of nearby aquatic habitats as a consequence of soil erosion, (3) changes in water quantity or water quality (e.g., grading that affects surface runoff patterns or depletions or discharges of water into aquatic habitats), or (4) releases of chemical contaminants into nearby aquatic systems. In some cases, impacts have a potential to continue to occur throughout the period covered by license renewal. In the 1996 GEIS, the NRC considered only the impact of refurbishment on aquatic habitats and concluded that the impact would be small at all nuclear plants (i.e., a Category 1 issue).

The surface area disturbed during construction of new waste storage facilities (e.g., ISFSIs) would be expected to range from about 1 to 4 ha (2.5 to 10 ac). Other supporting activities that could occur at specific sites may include the construction of new parking areas for plant employees, utility corridors, access roads, or new buildings or facilities, or the demolition of existing buildings. Land used for equipment storage, worker parking, and material laydown areas could result in disturbance to aquatic resources within the plant boundaries. Surface water habitats could also be affected by drain ponds, block or redirect streams, or place rip-rap along shorelines. The size and nature of the water body, and other project-specific aspects, organisms within the affected habitats could be displaced or killed, or the community structure within the water body could be altered.

The potential for soil erosion and sediment loading of nearby aquatic habitats is typically proportional to the amount of surface disturbance, erosion potential of the soil, slope, condition of disturbed areas at any given time, and proximity to aquatic habitats. Ground-disturbing activities have a higher erosion potential. Mitigation measures include controlling surface runoff with ditches, berms, and sedimentation basins; prompt revegetation to control erosion; stockpiling and reusing excavated topsoil; and various other techniques used to control soil erosion and water pollution. These mitigation measures (often referred to as best management practices) are expected to be implemented as part of project activities undertaken during the license renewal term to minimize impacts on surface water quality and aquatic resources.

During refurbishment, effluent discharges from the cooling system of a nuclear power plant would either remain similar to those occurring during normal operations during refurbishment or would decrease if the plant was partially or totally shut down. Consequently, effects of changes in water withdrawals and discharges during refurbishment would be of small significance. The impact on aquatic biota from water use would not be expected to substantially change during refurbishment or maintenance activities from the impact during existing operations.

During ground-disturbing activities, contaminants could enter aquatic habitats as a result of runoff from project sites or from accidental releases of fuels or lubricants. The level of impacts from releases of toxicants would depend on the type and volume of chemicals entering the waterway, the location of the release, the nature of the water body (e.g., size, volume, flow rates, and water chemistry), and the types and life stages of organisms present in the affected area. In general, lubricants and fuel would not be expected to enter waterways as long as construction machinery and fuel storage areas and fueling locations were located away from water bodies, and spill prevention and control measures are inplace.

Obstructions to fish movement could occur in streams with low flows. Restrictions on fish movement would likely be most significant if they occurred in streams that supported species that need to move to specific areas in order to reproduce.

The impact of refurbishment on aquatic habitats was evaluated in the 1996 GEIS and considered a Category 1 issue. Permits from various Federal, State, and local governmental authorities are typically required for ground-disturbing activities. For example, refurbishment may require the issuance of permits under Section 404 of the CWA if the activities were to directly affect aquatic habitats. With proper application of environmental reviews, permitting processes, and best management practices, impacts on sensitive aquatic habitats would likely be avoided. The NRC concludes that the impact of refurbishment activities on aquatic resources is small and remains a Category 1 issue.

Impacts of Transmission Line ROW Maintenance on Aquatic Resources

Impacts on aquatic resources from transmission line ROW maintenance could occur as a result of the direct disturbance of aquatic habitats, soil erosion, changes in water quality (from sedimentation and thermal effects), or inadvertent releases of chemical contaminants from herbicide use. These impacts could occur throughout the license renewal term. The NRC did not evaluate the impact of transmission line ROW maintenance on aquatic biota in the 1996 GEIS, but this issue has been identified by the NRC for consideration in this GEIS revision on the basis of past environmental reviews conducted for plant-specific SEISs.

Water quality impacts could result from maintaining transmission line ROWs and, as necessary, service roads. Where access roads cross or border on surface waters, soil erosion could cause elevated turbidity and sedimentation. Application of appropriate control techniques (e.g., establishing and maintaining vegetated buffer strips between the road and the body of water) would reduce impacts. Because ROWs are normally maintained by mowing, selective cutting, and/or selective application of herbicides, soil erosion from transmission line corridors should not normally be a problem. Potential toxic effects of herbicides that are applied to transmission line ROWs and subsequently transported to surface waters should be considered in the ROW maintenance program. By using herbicides approved for ROW use in accordance

with the Federal Insecticide, Fungicide, and Rodenticide Act, significant adverse effects of herbicides on aquatic ecosystems should be minimized. Maintenance activities in the vicinity of stream and river crossings employ procedures to minimize erosion and shoreline disturbance (e.g., control of vegetation within streamside buffer zones is generally accomplished by manual techniques) while encouraging small tree, shrub, and other low-growth vegetative cover. The nature or frequency of these activities is not expected to change substantially during the license renewal term.

For small streams in particular, trees may have grown sufficiently between cutting cycles to provide stream shading. Removal of these trees to maintain required conductor clearance could increase water temperature. Coldwater species may avoid such areas. The normal reaction of fish exposed to stressful temperatures is to move along the temperature gradient until preferred temperatures are encountered. Fish could avoid elevated temperatures within the opened ROW by swimming upstream or downstream to areas of groundwater inflow, to deep holes, or to shaded areas. However, effects that result in avoidance of specific areas by some species could represent a partial loss of available habitat. Thermal conditions of larger streams (e.g., those that are 3 m [10 ft] wide or wider) would be generally unaltered, since they are mostly unshaded.

Most transmission line ROWs are maintained on a 3- to 6-year cycle, so impacts on a water body would be infrequent. Any adverse impacts would be localized and temporary and would occur primarily on small streams. To minimize potential impacts from siltation and sedimentation, herbicide application, and stream warming, the licensee or owner of the transmission line typically adheres to standard mitigation practices (application of herbicides according to label instructions and by licensed personnel) listed in the vegetation management plan. Most operators establish stream buffer setbacks within which herbicides cannot be applied, and most widely used herbicides (e.g., glyphosate, fosamine, and imazapyr) pose minimal risks to aquatic organisms.

Changes in aquatic species diversity, abundance, or health from transmission line ROW maintenance are likely to be small. The continued use of proper management practices with respect to soil erosion and application of herbicides is expected. Consequently, it is anticipated that the impact of transmission lines on surface water quality and aquatic resources would be small. The decision to renew the license for a specific plant would affect only the portion of the transmission line that connects the power plant to the first substation. In many cases, the first substation is within or near the boundary of the plant property, and only a short distance of transmission line would be affected by the license renewal decision. Consequently, the amount of aquatic habitat crossed by this portion of a transmission line is also likely to be small.

The impact on aquatic resources of maintaining transmission line ROWs was not identified as an issue in the 1996 GEIS. However, the impact is expected to be small, short term, and

localized. The NRC concludes that the impact of transmission line ROW maintenance on aquatic resources would be small for all nuclear plants and is considered a Category 1 issue.

Losses from Predation, Parasitism, and Disease Among Organisms Exposed to Sublethal Stresses

Sublethal power plant stresses may alter predator-prey interactions in the receiving body of water. Aquatic organisms that are stunned but not killed by entrainment, impingement, or thermal effects may still suffer "indirect" mortality through increased susceptibility to predators. Numerous laboratory studies have been carried out to evaluate the level of indirect mortality that might occur following heat and cold shocks or entrainment (reviews in Cada et al. 1981; Coutant 1981). These studies have commonly demonstrated increased susceptibility to predation, but field evidence of such effects is often limited to anecdotal information such as observations of enhanced feeding activity of seagulls and predatory fish near power plant outfalls. For example, Barkley and Perrin (1971) and Romberg et al. (1974) reported increased concentrations of predators feeding on forage fish attracted to thermal plumes. Neither quantification of the levels of stress needed to increase predation rates, nor prediction of the subsequent population- and community-level effects of such changes can be made easily in the field. It is likely that operation of once-through cooling systems will cause some changes in predator-prey relationships, but the best evidence for impacts (or lack of impacts) may come from long-term monitoring of fish populations. Neither the literature reviews nor consultations with agencies and utilities (Appendix F) have revealed studies that demonstrate population- or community-level effects from power-plant-induced alterations of predator-prey relationships.

Elevated water temperatures in power plant discharges have been hypothesized to increase the susceptibility of fish to diseases and parasites. Langford (1983) cites a number of factors that could contribute to such an effect, including the tendency for fish to congregate in the heated discharge area in greater than normal concentrations, increased stresses on fish in warmer water that makes them more prone to infection, and the ability of some diseases and parasites to develop faster at higher temperatures. Additionally, it has been suggested that stress and injury from entrainment and impingement contribute to increased susceptibility of fish to disease, parasites, and predation. Coutant (1981) noted that although some studies of increased disease and parasitism in heated waters have found localized effects, most were not adequately designed to determine the significance of the effects to the overall population. The greatest risks appear to be associated with changes in animal concentrations; crowding can occur among fish that are attracted to heated effluents in the winter or that avoid heated water in the summer by occupying limited cool-water refugia. Crowding increases the chances of exposure to infectious diseases and may also lead to other stresses (decreased food supply or reduced oxygen concentrations) that increase susceptibility to disease (Coutant 1987). Despite limited laboratory studies that confirm this phenomenon, population-level effects in the vicinity of plants have not been observed.

Effects of sublethal stresses on the susceptibility of aquatic organisms to predation, parasitism, and disease are considered to be of small significance if changes are localized and populations in the receiving waterbody are not reduced. Based on reviews of literature and operational monitoring reports, consultations with utilities and regulatory agencies, and comments on the draft GEIS, these forms of indirect, power plant-induced mortality have not been shown to cause reductions in the overall populations near any existing nuclear power plants. Effects are considered to be of small significance for all plants. Although sublethal power plant stresses could contribute to cumulative impacts experienced by aquatic biota, monitoring has revealed no evidence for significant effects; the regulatory and resource agencies consulted in the preparation of this GEIS did not express concerns about the contribution of sublethal power plant stresses to cumulative impacts. No change in operation of the cooling system is expected during the license renewal term, so no change in effects of sublethal stresses is anticipated. Effects of sublethal stresses could be reduced by changing to a closed cycle cooling system or by reducing the plant's generation rate. However, because the effects of sublethal stresses are considered to be impacts of small significance this is considered a Category 1 issue.

Stimulation of Aquatic Nuisance Species (e.g., Shipworms)

An aquatic nuisance species is “a nonindigenous species that threatens the diversity or abundance of native species or the ecological stability of infested waters, or commercial, agricultural, aquacultural or recreational activities dependent on such waters” (Nonindigenous Aquatic Nuisance Prevention and Control Act of 1990). A variety of nuisance or nonnative species may become established or proliferate as a result of power plant operations, including fouling organisms such as the Asiatic clam and the recently introduced zebra mussel. Aspects of the operation of the power plants (e.g., warm temperatures or high flow rates that bring food to filter-feeding organisms) may be conducive to the growth and development of these organisms. Asiatic clams and zebra mussels may become so abundant as to cause operational difficulties for the power plant and may out-compete native clams and mussels in thermally enriched waters. A population of tropical, nonnative blue tilapia (*Oreochromis aureus*) became established in the Susquehanna River in Pennsylvania by congregating in thermal effluents during the winter. Exposure to rapid temperature decreases (cold shock) killed these fish and eradicated the population from the vicinity of a steam-electric power plant.

Langford (1983) reports a number of instances in which wood-boring crustaceans and mollusks, notably "shipworms," have caused concern in British waters. Although increased abundance of shipworms in the area influenced by heated power plant effluents caused substantial damage to wooden structures, replacement of old wood with concrete or metal structures eliminated the problem. Langford concluded that increased temperatures could enhance the activity and reproduction of wood-boring organisms in enclosed or limited areas but that elevated temperature patterns were not sufficiently stable to cause widespread effects.

In the United States, the influence of the operation of Oyster Creek Nuclear Generating Station on shipworm abundance and distribution has been extensively studied (see summary in Richards et al. 1984). Although numerous studies have varied somewhat in their conclusions, there is agreement that heated effluents from the plant increased the distribution and abundance of shipworms (Kennish et al. 1984). This species has not been found in Oyster Creek or Barnegat Bay since 1982, perhaps because of low water temperatures in Oyster Creek during a station outage in the winter of 1981–82 and the pathological effects of a parasite [GPU Nuclear Corporation response to NUMARC survey (NUMARC 1990)]. In addition, the removal of substantial amounts of driftwood and the replacement of untreated structural wood is thought to have contributed to reducing the populations of wood-boring organisms in Oyster Creek. No other concerns about nuisance organisms were cited by the regulatory or resource agencies contacted for this GEIS (Appendix F). Measures taken by licensees to control nuisance species (e.g., increased chlorination or use of molluscicides) may result in impacts on other species. This impact is also controlled by the NPDES permitting procedures.

The effects of stimulating the growth of nuisance organisms are considered to be of small significance to aquatic resources if these organisms are restricted to the condenser cooling system (e.g., Asiatic clam; zebra mussel) or do not proliferate beyond the immediate vicinity of the plant. Based on review of literature and operational monitoring reports, consultations with utilities and regulatory agencies, and comments on the draft GEIS, nuisance organisms such as Asiatic clam may be an operational problem, but they have not impacted aquatic resources near most existing nuclear power plants. Mitigation measures were effective at the one plant that experienced problems with nuisance organisms (e.g., shipworms). Effects are considered to be of small significance for all plants. The regulatory and resource agencies consulted in the preparation of this GEIS did not express concerns about the contribution of power plant operations to other activities that might encourage the growth of nuisance organisms (i.e., cumulative effects). No change in operation of the cooling system is expected during the license renewal term, so no change in the growth or distribution of nuisance organisms is anticipated. Effects on nuisance organisms could be reduced by changing to a closed-cycle cooling system or by reducing the plant's generation rate. The stimulation of nuisance aquatic organisms by operation of existing power plants is a Category 1 issue.

Summary

The issues and the need for these issues to be addressed in license renewal applications of existing nuclear power plants with once-through cooling systems are summarized in Table 4.6.1.2–3. The operational experience of existing nuclear power plants indicates that many early aquatic resource issues that caused a concern in the 1970s when nuclear power

generation was new have not materialized as problems at any facility and some problems at a few nuclear power plants with once-through cooling systems have since been mitigated.

Some aquatic resource issues warrant further monitoring and, in some cases, mitigative measures to define and correct adverse impacts. The entrainment and impingement of fish and the discharge of large volumes of heated effluents into small or warm ambient waters were a source of concern at some nuclear power plants. Such issues were examined and resolved through either the National Environmental Policy Act (NEPA) process during the licensing of the facility or the mechanisms of NPDES permitting and associated 316(a) and (b) determinations. They were found either acceptable or mitigated. For some plants with once-through cooling systems, the large volumes of water withdrawn, heated, and discharged back to the receiving water may cause adverse effects to fish and shellfish populations during the license renewal term. Because impacts of entrainment of fish and shellfish, impingement, and thermal discharge effects could be small, moderate, or large, depending on the plant, these are Category 2 issues for plants with once-through cooling systems. These issues will need to be analyzed in the supplemental NEPA document at the time of license renewal.

4.6.1.3 Threatened, Endangered, and Protected Species and Essential Fish Habitat

The impacts associated with continued nuclear power plant operations and refurbishment activities during the license renewal term that could affect threatened and endangered species and special status species and habitats are similar to those described for terrestrial resources (Section 4.6.1.1) and aquatic resources (Section 4.6.1.2). Continued operations during the 20-year license renewal term would be expected to include such stressors as operation of cooling towers, operation of once-through cooling systems and cooling ponds, transmission line ROW management, maintenance of site facilities, releases of gaseous and liquid effluents, withdrawal of surface water, and potentially refurbishment activities. Details are presented in Section 3.6.3. There are several Federal Acts that provide protection to certain species and habitats are treated here as a single issue that includes impacts to biological resources such as threatened and endangered species and their critical habitat (issue modified from the 1996 GEIS to include the impacts on both Federally and State-listed species and the impacts of continued operations and refurbishment activities), and essential fish habitats (EFH) protected under the Magnuson-Stevens Act, and mammalian species protected under the Marine Mammal Protection Act.

Table 4.6.1.2–3. Significance Level of Aquatic Resources Impacts for License Renewal of Existing Nuclear Power Plants that Use Once-Through Cooling Systems

Issue	Impact Significance[(a)]
Surface Water Quality, Hydrology, and Use Issues	
Water use conflicts (plants with once-through cooling)	1
Water use conflicts (plants with cooling ponds or cooling towers using makeup water from a river with low flow)	1
Altered current patterns at intake and discharge structures	1
Altered salinity gradients	1
Temperature effects on sediment transport capacity	1
Altered thermal stratification of lakes	1
Scouring from discharged cooling water	1
Discharge of chlorine or other biocides	1
Discharge of metals in waste water	1
Discharge of sanitary wastes and minor chemical spills	1
Effects of consumptive water use on riparian communities	1
Aquatic Ecology	
Impingement and entrainment of aquatic organisms (plants with once-through cooling systems or cooling ponds)	2
Thermal impacts to aquatic organisms (plants with once-through cooling or cooling ponds)	2
Effects of cooling water discharge on dissolved oxygen and gas supersaturation	1
Effects of nonradiological contaminants on aquatic organisms	1
Stimulation of nuisance species (e.g., shipworms)	1
Losses from predation, parasitism, and disease among organisms exposed to sublethal stresses	1
Effects of dredging on aquatic organisms	1
Water use conflicts with aquatic organisms (plants with cooling ponds or cooling towers using makeup water from a river with low flow)	2
Refurbishment impacts on aquatic resources	1
Impacts of transmission line ROW maintenance	1
Impingement and entrainment of aquatic organisms (plants with cooling towers)	1
Thermal impacts to aquatic organisms (plants with cooling towers)	1
Effects of cooling water discharge on dissolved oxygen, gas supersaturation, and eutrophication	1

(a) A "1" means impact significance expected to be small at all sites. A "2" means that the impact may be of moderate or large significance at some sites.

Threatened, Endangered, and Protected Species and Essential Fish Habitat

Terrestrial Threatened and Endangered Species – Continued operations and refurbishment activities at all nuclear plants could have an impact on Federally or State-listed threatened and endangered species during the license renewal term. Factors that could potentially result in impacts on listed terrestrial species include habitat disturbance, cooling tower drift, operation and maintenance of cooling systems, transmission line ROW maintenance, collisions with cooling towers and transmission lines, and exposure to radionuclides. In the 1996 GEIS, the NRC considered only the impacts of refurbishment on threatened and endangered terrestrial species and concluded that the impacts would not necessarily be the same at all sites (i.e., a Category 2 issue) and could range from small to large. For this GEIS revision, the impacts of continued operations were also considered.

Federally listed threatened and endangered terrestrial species are protected under the Endangered Species Act (ESA) of 1973, while State-listed species are protected under provisions of various State regulations. Prior to license renewal, the NRC must consult with the U.S. Fish and Wildlife Service (USFWS) to determine the presence of any Federally listed species or critical habitat at or near the site and assess the potential for impacts from continued operation of the plant or associated transmission lines. The appropriate State agencies also would be contacted regarding procedures for assessing impacts to State-listed species. The impacts of refurbishment activities on threatened or endangered species must also be considered during project planning, and consultation with the USFWS must be initiated if the possibility for impacts exists. Guidance for the consultation process is provided in the *Endangered Species Consultation Handbook* (USFWS and NMFS 1998).

Site-specific factors related to continued operations and refurbishment activities may vary widely among nuclear power plants. The listed species on or in the vicinity of nuclear power plants also range widely, depending on numerous factors such as the plant location and habitat types present (see Section 3.6.3). In addition, the list of threatened and endangered species is not static and is frequently modified by the USFWS and State agencies, with new listings being added as some species are determined to be eligible, other species being delisted (removed from the list), or the listing category of some species being changed because of changes in the status of or threats to the species population. Therefore, a generic determination of potential impacts on listed species during a nuclear power plant's license renewal term is not possible. Impacts on threatened and endangered species would depend on site-specific factors, and impact assessments would need to be conducted on a site-specific basis. Nuclear plants known to support terrestrial listed species on the site or along transmission line ROWs generally have monitoring programs to identify changes in populations and report impacts to the USFWS and State agencies. Monitoring provides information that can be used for developing or adjusting mitigation during the license renewal term.

Aquatic Threatened or Endangered Species, Marine Mammals, and Essential Fish Habitat –

Potential impacts of continued operations and refurbishment activities on Federally or State-listed threatened and endangered species, protected marine mammals, and EFH could occur during the license renewal term. This issue applies to all operating nuclear power plants. Impacts to these resources that have occurred at operating nuclear plants are discussed in Section 3.6.3.1. Factors that could potentially result in impacts to these species and habitats include impacts of refurbishment, other ground-disturbing activities, release of contaminants, effects of cooling water discharge on dissolved oxygen, gas supersaturation, eutrophication, thermal discharges, entrainment, impingement, reduction in water levels due to the cooling system operations, dredging, radionuclides, and transmission line ROW maintenance. In the 1996 GEIS, the NRC considered potential impacts on threatened and endangered aquatic species from the operation of all nuclear power plants as a Category 2 issue and concluded that the impacts could range from small to large.

Power plants (nuclear and otherwise) that use estuarine or marine waters for cooling could entrain or impinge sea turtles (National Research Council 1990). The impingement mortality of sea turtles (all of which are Federally listed) has been one of the most pressing concerns to date with regard to the effects of nuclear power plant operations on listed species. Sea turtles are commonly encountered at some coastal nuclear plants, including the St. Lucie plant in Florida, the Oyster Creek plant in New Jersey, and the Brunswick plant in North Carolina. Between 1977 and 1997, the average number of sea turtles removed from the intake canal at the St. Lucie plant was 266 per year (Gunter et al. 2001). These included loggerhead, green, leatherback, hawksbill, and Kemp's ridley sea turtles. Most were loggerhead and green sea turtles, with an average of 150 and 103 removed per year, respectively. Among the sea turtles removed, about 4 percent of the loggerheads, 2 percent of the green, and 13 percent of the Kemp's ridley sea turtles were dead (Gunter et al. 2001). Sixty-eight sea turtles were impinged on intake screens at the Oyster Creek plant between 1992 and 2005, and 28 (41 percent) of those individuals died (NRC 2007c). The incidental take limit established by the NMFS for Kemp's ridley sea turtles was exceeded at the Oyster Creek plant in 2004, which required re-initiation of ESA Section 7 consultation with the NMFS (NRC 2007c). All three sea turtle species have been collected, as recently as 2004, in the vicinity of the Brunswick plant intake canal in North Carolina (NRC 2006e). Seventy-five percent of these turtles were released unharmed to the ocean or transported to a sea turtle facility for rehabilitation. Special panels have been installed at the diversion structure of the Brunswick plant, located at the entrance to the intake canal, to minimize the potential for sea turtles to enter the intake canal (NRC 2006e). The licensees of the St. Lucie, Oyster Creek, and Brunswick plants have also implemented programs to monitor the intake canals for sea turtles and to capture and release to the wild any sea turtles observed in the intake canals (NRC 2003a, 2007c, 2006e). In addition, the licensee of the St. Lucie plant has initiated programs to monitor turtle nests on nearby beaches and has implemented facility lighting restrictions (NRC 2003a). Incidental takes of sea turtles

have also been recorded for other plants that use estuarine or marine waters for cooling, including the Crystal River and Salem plants (Sackschewsky 2004). Sea turtles also have the potential to occur in the vicinity of other nuclear power plants located near estuarine or marine ecosystems, including the Calvert Cliffs, Diablo Canyon, Hope Creek, and Millstone plants (Sackschewsky 2004). In the SEISs prepared for the Calvert Cliffs plant (NRC 1999b) and the Millstone plant (NRC 2005c), it was determined that continued operations would not adversely affect endangered sea turtles.

Many nuclear plants whose operations are known to affect special status aquatic species or for which special status species are known to occur within the waterbodies crossed by transmission line ROWs have established monitoring programs and implemented mitigations in consultation with the USFWS or National Marine Fisheries Service (NMFS). For some plants, incidental take limits have been established to ensure that effects on species do not exceed specific levels. Exceeding these incidental take limits would require the NRC to reinitiate consultation with USFWS or NMFS. Continued implementation of these actions would reduce the potential for adverse impacts to listed species during the license renewal term.

Prior to license renewal, the NRC should consult with the USFWS and NMFS to determine the presence of and possible impacts on any ESA-listed aquatic species. Guidance for the ESA consultation process is provided in the *Endangered Species Consultation Handbook* (USFWS and NMFS 1998). The NRC should also contact the NMFS for license renewal applications for plants located in areas that may contain EFH for Federally managed marine or anadromous fisheries or for plants that may have an effect on protected marine mammals. In addition, the appropriate State agencies should be contacted to determine the potential for State-listed species to be affected by continued operations and refurbishment activities during the license renewal term. Subsequent consultation could be required for specific maintenance or refurbishment activities undertaken at a plant during the license renewal term.

Site-specific factors related to operations and refurbishment varies widely among nuclear power plants. The special status aquatic species and habitats in the vicinity of nuclear power plants and their transmission lines also vary widely, depending on numerous factors such as the plant location and habitat types present (see Section 3.6.3.2). In addition, the lists of special status species and habitats are not static and are frequently modified by the USFWS, NMFS, and State agencies, with new listings being added as some species are determined to be eligible, other species being delisted (removed from the list), or the listing category of some species being changed because of changes in the status of or threats to the species population. EFH designations and status also can change through time. Therefore, a generic determination of potential impacts on species and habitats during a nuclear power plant's license renewal term is not possible. Impacts on special status species and habitats would depend on site-specific factors, and impact assessments would need to be conducted on a site-specific basis in the plant-specific SEISs prepared for license renewal applications.

On the basis of these considerations, the NRC concludes that the impact of continued operations and refurbishment activities on threatened, endangered, and protected species and habitats could be small, moderate, or large, depending on plant-specific design and operating characteristics, environmental review procedures established for ground-disturbing activities, the occurrence of species and habitats, and other site-specific considerations. This issue is a plant-specific, or Category 2 issue.

4.6.2 Environmental Consequences of Alternatives to the Proposed Action

Construction – Ecological impacts are site-dependent. Impacts would depend on the location of proposed facilities, the size of the area affected, and the specific ecological characteristics of the area to be developed. Vegetation would be removed from construction and material storage areas, and along utility pathways. Some disturbed areas would be re-vegetated after plant construction. Native vegetation could be displaced by invasive species in areas disturbed by construction. Some areas near access roads may be affected by the release of fugitive dust.

Construction-related noise could disturb wildlife. Permanent habitat loss could occur for some species. Despite reclamation efforts, a certain amount of natural habitat at greefield sits could be permanently lost. Industrial development at brownfield and existing nuclear power plant sites have already affected or altered the natural habitat.

Operations – Various impacts on ecological resources can be anticipated throughout the operating period of an electrical power plant. Impacts include fugitive dust; impingement and entrainment of fish and other aquatic organisms; heated effluent from cooling water discharge and blowdown; gasifier and boiler blowdowns; steam water treatment; cooling tower drift (fogging and ice); salt deposition; maintenance of transmission line ROWs; bird collisions; and wildlife avoidance behavior due to operational activities and noise. Aquatic ecosystems would be affected by cooling water discharge, steam-cycle blowdown, and other (NPDES-permitted) wastewater. Onsite maintenance, accumulation of contaminants in sediment or biota, changes in levels of dissolved oxygen in surface water, dredging, and possible deposition of radionuclides would also impact aquatic resources.

4.6.2.1 Fossil Energy Alternatives

Operations – Operational impacts include acid precipitation. EPA estimates acid emission rates from coal-fired power plants could range from: IGCC, 0.004 to 0.30 lb/ MWh; subcritical PC, 0.018 to 0.088 lb/MWh; supercritical PC, 0.017 to 0.082 lb/ MWh; ultra-supercritical PC, 0.015 to 0.074 lb/MWh.

4.6.2.2 Renewable Alternatives

Construction – Dams and reservoirs would alter river flow and temperature, which could affect aquatic and terrestrial resources downstream. Dams create a barrier to fish migration if fish passages are not installed. Aquatic and terrestrial resources would have to adapt to the newly created reservoir. Disruptions to the sea bottom for installation of power and communication cables would affect benthic populations and other species that rely on benthic organisms for food. Unique ecological impacts could result from construction of offshore facilities from boat traffic to and from the construction site. Other impacts include underwater noise, alteration of sediment transport and deposition patterns, and possible disruption of onshore and nearshore nesting areas.

Operations – The operational impacts of alternative energy technologies on terrestrial and aquatic ecology are presented in the following subsections.

Hydroelectric Energy Sources

Downstream conditions could be affected by dam operations (store-and-release of water) that could vary river flow conditions. Aquatic and terrestrial resources would be affected by fluctuating water levels downstream of the dam. Aquatic organisms could become stranded temporarily when river levels are lowered. Temperature and nutrient stratification in the reservoir and reduced levels of dissolved oxygen could result in hypotoxic or anoxic conditions for aquatic organisms. Aquatic and riparian ecosystems downstream would be affected by a variety of dam-induced conditions, such as changes in sediment transport and deposition patterns, and channel erosion or scouring. Hydropower operations could enhance populations of nonnative aquatic biota and riparian plants.

Geothermal

Birds and bats could be affected by contact with geothermal fluids temporarily stored in surface impoundments.

Wind

Aerodynamic and mechanical noise from wind turbines would affect wildlife. Collisions with wind turbines would increase bird and bat mortality. However technological advances allow rotors to turn at lower speeds, thus reducing the potential for bird and bat strikes. Underwater noise impacts from offshore facilities would extend to great distances due to the density of water. Offshore facilities could impact threatened and endangered species, marine mammals, birds, or sea turtles. Other impacts include disturbance of nesting areas, alteration of key habitat, underwater noise, or fuel spills.

Biomass

Habitat loss could occur from the cultivation of energy crops. Deposition of toxic constituents from municipal solid waste feedstock could affect aquatic and terrestrial ecosystems.

Solar Thermal and Photovoltaic

Synthetic organic heat transfer fluids could affect surrounding vegetation. Misalignment of mirrors could also increase fire risk.

Ocean Wave and Current

Boat traffic, noise, navigation safety lights, inspection and maintenance activities could affect marine mammals, fish, and sea turtles. Sea turtles could be affected by wave-topping devices. Onshore nesting areas could be affected. Fish, sea turtles, and marine mammals could collide with underwater turbines.

4.7 Historic and Cultural Resources

4.7.1 Environmental Consequences of the Proposed Action – Continued Operations and Refurbishment

Historic and cultural resources include archaeological sites, historic structures, and traditional cultural properties. Continued operations and refurbishment activities at a nuclear power plant during the license renewal term can affect historic and cultural resources through (1) ground-disturbing activities associated with plant operations, supporting activities (e.g., new parking lots or buildings), major refurbishment actions, landscaping, or recreational use of plant property and (2) activities associated with transmission line maintenance (e.g., maintenance of access roads or removal of danger trees).

The area of potential effect for license renewal is generally considered to be the area at the power plant site and its immediate environs that may be affected by continued operations and refurbishment activities. The area of potential effect may extend beyond the immediate environs in those instances where continued operations and refurbishment activities could affect known and unknown historic and cultural resources. This determination is made irrespective of ownership or control of the lands of interest.

The historic and cultural resources present at each site can be quite different and can be assessed only at a plant-specific level. However, some factors related to license renewal can be discussed generically. Most plant sites have not been examined for the presence of historic and cultural resources. As discussed in Section 3.7, there was the potential for historic and cultural resources to be present at most sites prior to construction. However, much of the land immediately surrounding the power block was disturbed down to bedrock at the time of construction. This construction would have eliminated any potential for historic and cultural resources to be present in portions of the plant site. A review of past plant activities conducted by cultural resource professionals and approved by the appropriate State Historic Preservation Office (SHPO) would identify areas that have the potential to contain historic and cultural resources.

The National Historic Preservation Act of 1966 (NHPA) requires consideration of project impacts on "significant" historic and cultural resources only. Significance is determined through an evaluation by a cultural resource professional, as discussed in Section 3.7. Only through consultation with the SHPO and the NRC could the appropriate mitigation of impacts be determined for the resources being impacted.

Only one impact issue is evaluated:

- Impact of continued operations and refurbishment activities on historic and cultural resources located onsite and in transmission line rights-of-way.

This issue was addressed in the 1996 GEIS; however, some changes to the process for considering historic and cultural resources have been made, and the range of historic and cultural resources has been expanded to include traditional cultural properties.

Impact of Continued Operations and Refurbishment on Historic and Cultural Resources

Most nuclear plant sites were not investigated for the presence of historic and cultural resources prior to construction; therefore, most licensees are not aware of the occurrence or status of historic and cultural resources on their site. Archaeological sites are generally identifiable only through field investigations and are expected to be the most common resource present. Historic era cultural resources are more easily identifiable without field investigations. In some cases, the power plant may be considered a historic resource that is eligible for listing on the *National Register of Historic Places* (*National Register*) for its design or engineering and would require consideration under the NHPA. Traditional cultural properties are generally identifiable only through consultation. Although it is unlikely that any traditional cultural properties would be known at existing plants, there is the potential for these resources to be present at nuclear power plants.

Activities associated with continued operations of a nuclear power plant have the potential to affect historic and cultural resources if present. The activities associated with plant operations would need to be reviewed on a plant-specific basis to determine if they could affect historic and cultural resources. Some operational activities, construction projects, refurbishment actions, landscaping activities, and recreational activities have the potential to disturb the ground surface. Ground-surface disturbance can result in the alteration of historic and cultural resources. These activities could include, but are not limited to, grading an area for use, excavating soil to be used in landscaping or filling, driving large vehicles over undisturbed areas, or making new agricultural use of previously undisturbed portions of the site. All of these activities can damage or move artifacts.

The consideration of an undertaking's effect on historic and cultural resources applies only to Federal actions. The Federal undertaking considered in this document is license renewal. It is acknowledged that plant operations could affect significant historic and cultural resources. Some support activities that take place after renewal are not necessarily reviewed by the NRC and are not considered individual undertakings. Under Section 106 of the NHPA, the NRC must take into account the effect of the undertaking on any historic and cultural resources included in or eligible for inclusion in the *National Register*. Therefore, to assess the impact of continued operations on these resources, all historic and cultural resources that could be affected must be known at the time of license renewal. To achieve this objective, field investigations should be performed on the entire plant site. The eligibility of a historic and cultural resource for listing on the *National Register* should be determined, and a process for considering these resources should be developed before renewing the license.

Many nuclear power plant sites have environmental review procedures that aid in ensuring that no known or unknown historic or cultural resources are affected by a project or activity. Procedures that incorporate the process identified in Section 106 of the NHPA would provide the greatest protection to the resource. The Section 106 process begins with consultation with the SHPO and Federally recognized Native American Tribes. The Section 106 process also includes determining if any historic and cultural resources that are over 50 years in age are present in the area of potential effects through field identification, document reviews, and consultation with Federally recognized Native American Tribes. If a historic or cultural resource that is eligible for the *National Register* is present, a determination of adverse or no adverse effect would be developed in consultation with the SHPO for the action as well as any necessary mitigation.

Most transmission line ROWs were not surveyed prior to construction; therefore, the location of historic and cultural resources along the lines is generally not known. Of the three types of historic and cultural resources (historic structures, archaeological resources, and traditional cultural properties), archaeological resources have the greatest potential to remain within transmission line ROWs. It is unlikely that any historic-era structures would remain within the

ROW, and traditional cultural properties are generally identifiable only through consultation. Most maintenance activities would not affect historic and cultural resources within a transmission line ROW. Activities such as mowing or spreading herbicides would not be expected to affect most historic and cultural resources. Only activities that could result in ground disturbance or erosion would be of concern. These activities would include the removal of danger trees and improvement of access roads.

Section 106 of the NHPA applies only to undertakings in the transmission ROW in which there is Federal involvement. For license renewal, this would only apply to those transmission lines that are currently needed to connect the power plant to the regional electrical distribution grid because these are the only lines whose existence is dependent on license renewal. Potential effects on historic and cultural resources within the transmission line ROWs associated with the nuclear plants are considered only during license renewal by the NRC. Some activities that take place along the transmission lines have the potential to affect historic and cultural resources. For activities connected to license renewal, the resources in the transmission line ROWs must be identified. The means for considering the effects of transmission line maintenance on these resources should be determined before renewal of the license.

Transmission line maintenance plans are developed and followed by power line companies. These plans could address the appropriate treatment of historic and cultural resources within the ROW. Incorporation of the procedures identified in Section 106 of the NHPA would provide the greatest protection for cultural resources. These procedures could include a process for addressing unexpected discovery of historic and cultural resources in the ROW. If a historic or cultural resource was affected by maintenance activities, the appropriate mitigation would be developed in consultation with the SHPO.

Most plant-specific SEISs have reviewed impacts associated with transmission line ROW maintenance activities. In the 1996 GEIS, the NRC considered the impact of continued operations and refurbishment on historic and cultural resources at the plants and concluded that it would not be the same at all plants (i.e., a Category 2 issue) and could range from small to large. No new information has been identified that would alter this conclusion.

On the basis of these considerations, the NRC concludes that the impact of continued operations and refurbishment activities on onsite historic and cultural resources could be small, moderate, or large, depending on the nature and type of the resources at a site and remains a Category 2 issue.

4.7.2 Environmental Consequences of Alternatives to the Proposed Action

Construction – Before constructing a new power plant at a greenfield, brownfield, or existing nuclear power plant site, a cultural resource inventory would need to be performed for any

property that has not been previously surveyed. Any land acquired to support the power plant would also need to be surveyed for cultural resources, as well as identification and recording existing historic and cultural resources. Studies would be needed for all areas of potential disturbance at the proposed power plant site and along associated corridors where new construction would occur (e.g., roads, transmission corridors, rail lines, or other ROWs).

Operation – Activities associated with power plant operations have the potential to affect historic and cultural resources if present. Some operational activities, construction projects, landscaping activities, and recreational activities have the potential to disturb the ground surface. Ground disturbance can adversely affect historic and cultural resources. These activities could include, but are not limited to, grading an area for use, excavating soil to be used in landscaping or filling, driving large vehicles over undisturbed areas, or making use of previously undisturbed portions of the site. All of these activities can damage or move artifacts.

4.7.2.1 Renewable Alternatives

Operations – The operational impacts of alternative energy technologies on historic and cultural resources are presented in the following subsections.

Hydroelectric Energy Sources

Fluctuations of river flow could erode embankments affecting downstream historic and cultural resources.

Wind

Historic and cultural resources would be affected by the presence of wind turbines in the viewshed.

Ocean Wave and Current

Historic and cultural resources located offshore could be affected by kinetic energy by ocean wave and/or current-energy-capturing devices.

4.8 Socioeconomics

4.8.1 Environmental Consequences of the Proposed Action – Continued Operations and Refurbishment Activities

This section describes the socioeconomic impacts associated with the continued operation and refurbishment of nuclear power plants. Regional socioeconomic conditions have already been affected by the construction and initial operation of the plant. The socioeconomic impact of plant operations is ongoing and has become well established during the current licensing term for all nuclear power plants.

The number of jobs created by license renewal and refurbishment activities at a nuclear power plant can have an effect on socioeconomic conditions in the region around each plant. Job creation can be differentiated by two types: (1) refurbishment/construction–related jobs, which are transient in nature, short in duration, and less likely to have a lasting impact on community services; and (2) operations–related jobs, which tend to be more stable, longer in duration, and more likely to have a permanent impact on community services. Because of the relatively short duration of refurbishment activities, construction workers generally seek temporary/rental housing and require a limited range of goods and services from the community. Operations workers relocating to the region for long-term employment require more permanent housing and a full range of goods and services from the community.

A review of license renewal applications received by the NRC since the 1996 GEIS has shown little or no need to increase the number of workers at a nuclear power plant during the license renewal term. In addition, refurbishment activities, such as steam generator and vessel head replacement, have not required the large numbers of workers and months of time that was conservatively estimated in the 1996 GEIS. Therefore, license renewal is not likely to affect socioeconomic conditions in the vicinity of a nuclear power plant beyond what is currently being experienced, and any impacts from refurbishment activities would be similar to what has been experienced during regularly scheduled plant refueling and maintenance outages.

The analysis presented in this section considers five socioeconomic impact issues including the original impact issues addressed in the 1996 GEIS. The impacts of refurbishment are also included. The five issues are:

- Impacts on employment and income, recreation and tourism (impacts on employment and income were not addressed in the 1996 GEIS). Also included in this issue are the impacts on recreation and tourism (impacts on tourism and recreation were addressed in the 1996 GEIS as part of the impact on “Public services: public safety, social services, and tourism and recreation”);

- Impacts on tax revenue (considered in the 1996 GEIS, but not identified as an issue in Table B-1);

- Impacts on community services and education (impacts on "Public services: public safety, social services…"; "Public services: public utilities"; "Public services, education (license renewal term)"; "Public services, education (refurbishment)" were considered as separate impact issues in the 1996 GEIS. All but "Public services: …tourism and recreation" are considered in this combined issue);

- Impacts on population and housing (both impacts were considered in the 1996 GEIS, although population impacts was not identified as an issue in Table B-1); and

- Impacts on local transportation (considered in the 1996 GEIS as part of the impact on "Public services, Transportation").

Impacts on Employment and Income, Recreation and Tourism

A nuclear power plant creates employment and income opportunities in the communities around it. Consequently, the plant and the people and communities surrounding it can be described as a dynamic socioeconomic system. A power plant needs people, goods, and services from the communities to operate the plant and generate electric power; and the communities, in turn, benefit from the electrical power and provide the people, goods, and services to run the plant. Plant employees residing in the community receive income from the plant in the form of wages, salaries, and benefits. Employees and their families, in turn, spend this income on goods and services within the community thereby creating additional opportunities for employment and income. In addition, people and businesses in the community receive income for the goods and services sold to the power plant. Payments for these goods and services create additional employment and income opportunities in the community. The measure of a communities' ability to support the operational demands of a power plant depends on the ability of the community to respond to changing socioeconomic conditions.

As previously discussed, it is unlikely that the number of permanent operations workers would increase at a nuclear power plant during the license renewal term. While it was estimated in the 1996 GEIS that up to 60 additional workers per unit could be required during the license renewal term, subsequent environmental reviews have shown little or no need for additional operations workers. In addition, refurbishment activities, such as steam generator and vessel head replacement, have not required the numbers of workers and the months of time conservatively estimated in the 1996 GEIS. Consequently, employment levels at a nuclear power plant are not expected to change as a result of license renewal.

Some communities also experience seasonal transient population growth associated with local regional tourism and recreational activities. Income from these activities creates additional employment and income opportunities in the regions arround nuclear power plants. Nuclear power plants located in coastal regions, notably Pilgrim located near Plymouth and Cape Cod, Massachusetts; the D.C. Cook and Palisades plants on the eastern shore of Lake Michigan and the Oyster Creek plant on the New Jersey shore north of Atlantic City, have summer, weekend, and retirement populations and a range of recreational and environmental amenities that attract visitors. Some areas, such as the region around the Vermont Yankee plant in Vermont, attract visitors interested in outdoor recreational activities, such as camping, hiking, and skiing.

As discussed in Section 4.2.1.2, the NRC considered the impacts of continued plant operations during the license renewal term and refurbishment on visual resources in the 1996 GEIS, which could affect tourism and recreational business interests. The NRC concluded in the 1996 GEIS that the impacts on visual resources would be small for all plants and was a Category 1 issue, primarily because the impact had already occurred and the visual profile of nuclear power plants were not expected to change as a result of license renewal. Also, visual impacts tend to wear off over time when viewed repeatedly.

However, a case study performed for the 1996 GEIS found situations where nuclear power plants have had a negative effect on visual resources. Negative perceptions were based on aesthetic considerations (for instance, the plant is out of character or scale with the community or the viewshed), physical environmental concerns, safety and perceived risk issues, an anti-plant (or utility) attitude, or an anti-nuclear orientation. It is believed that some of these negative perceptions would persist regardless of mitigation measures. Subsequent license renewal reviews have not revealed any new information that would change this perception.

Nevertheless, the effects of nuclear power plant operations on employment and income, tourism and recreation are ongoing and have become well established during the current licensing term for all nuclear plants. The impacts from plant operations in support of license renewal and during the license renewal term on employment and income in the region around each nuclear power plant would be no different from what is currently being experienced. In addition, tourism and recreational activities in the vicinity of nuclear plants are not expected to change as a result of license renewal. On the basis of these considerations, the NRC concludes that the impact of continued nuclear plant operations and refurbishment activities on employment and income, recreation and tourism would be small and is therefore considered a Category 1 issue.

Impacts on Tax Revenues

Operating nuclear power plants are an important source of tax revenue for many local governments and public school systems. Tax revenue from power plants generally comes from

property tax payments or other forms of payments such as payments in lieu of (property) taxes (PILOT) levied on the utility, although taxes on energy production have also been collected from a number of nuclear power plants. County and municipal governments and local public school districts receive tax revenue either directly or indirectly through state tax and revenue-sharing programs.

Counties and municipal governments in the vicinity of a nuclear power plant also receive revenue from sales taxes and fees paid by the power plant and its employees. Changes in the number of workers and the amount of taxes paid to county, municipal governments, and public schools can affect socioeconomic conditions in the counties around the nuclear plant.

A review of license renewal applications received by the NRC since the 1996 GEIS has shown that refurbishment activities, such as steam generator and vessel head replacement, have not had a noticeable affect on the assessed value of nuclear plants, thus changes in tax revenues are not anticipated from future refurbishment activities. Refurbishment activities involving the one-for-one replacement of existing components and equipment are generally not considered a taxable improvement. Also, property tax assessments; proprietary payments in lieu of tax stipulations, settlements, and agreements; and state tax laws are continually changing the amount of taxes paid to taxing jurisdictions by nuclear plant owners. These changes are independent of license renewal and refurbishment activities.

The primary impact of license renewal would be the continuation or change in the amount of taxes paid by nuclear power plant owners to local governments and public school systems. The impact of nuclear plant operations on tax revenues in local communities and the impact that the expenditure of tax revenues has on the region are not expected to change appreciably from the amount of taxes paid during the current license term. Tax payments during the license renewal term would be similar to those currently being paid by each nuclear plant. On the basis of these considerations, the NRC concludes that the impact of continued nuclear plant operations and refurbishment on tax revenue would be small and is therefore considered a Category 1 issue.

Impacts on Community Services and Education

In the 1996 GEIS, impacts on public (community) services and education were determined based on the projected number of “in-migrating” workers accompanied by their families. In addition, impacts on “Public services: public safety, social services…”; “Public services: public utilities”; “Public services, education (license renewal term)”; “Public services, education (refurbishment)” were considered as separate impact issues in the 1996 GEIS. All but “Public services: …tourism and recreation” are considered in this combined issue.

The four 1996 GEIS issues are combined because all public services are equally affected by changes in plant operations and refurbishment activities at nuclear plants. Any changes in the

number of workers at a nuclear plant will affect the demand for public services from local communities. Environmental reviews conducted by NRC since the 1996 GEIS have shown, however, that the number of workers at relicensed nuclear plants has not changed significantly because of license renewal, so demand-related impacts on community services, including public utilities, are no longer anticipated from future license renewals.

In addition, refurbishment activities, such as steam generator and vessel head replacement, have not required the large numbers of workers and the months of time that was conservatively analyzed in the 1996 GEIS, so significant impacts on community services are no longer anticipated. Because of the relatively short duration of refurbishment-related activities, workers are not expected to bring families and school-age children with them; therefore, impacts from refurbishment on educational services are also no longer anticipated.

Taxes paid by nuclear power plant owners support a range of community services, including public water, safety, fire protection, health, and judicial, social, and educational services. In some communities, tax revenues from power plants can have a noticeable impact on the quality of services available to local residents. Although many of the community services paid for by tax revenues from power plants are used by plant workers and their families, the impact of nuclear plant operations on the availability and quality of community services and education is small and is not expected to change as a result of license renewal. On the basis of these considerations, the NRC concludes that the impact of continued nuclear plant operations and refurbishment activities on community services and education would be small and is therefore considered a Category 1 issue.

Impacts on Population and Housing

Socioeconomic impact analyses of resources (e.g., housing) affected by changes in regional population are based on employment trends at nuclear power plants. Population growth from increased employment and spending at a nuclear power plant is important because it is one of the main drivers of socioeconomic impacts. Plant-induced population growth, while not an impact itself, was studied as a potential influence on a number of impact issues analyzed in the 1996 GEIS. As previously discussed, however, employment levels at nuclear power plants are expected to remain relatively constant with little or no population growth or increased demand for permanent housing during the license renewal term. The operational effects on population and housing values and availability in the vicinity of nuclear power plants are not expected to change from what is currently being experienced, and no demand-related impacts are expected during the license renewal term.

The increased number of workers at nuclear power plants during regularly scheduled plant refueling and maintenance outages does create a short-term increase in the demand for temporary (rental) housing units in the region around each plant. However, because of the

short duration and the repeated nature of these scheduled outages and the general availability of rental housing units (including portable trailers) in the vicinity of nuclear power plants, employment-related housing impacts have had little or no long-term impact on the price and availability of rental housing. Refurbishment impacts would be similar to what is experienced during routine plant refueling and maintenance outages.

License renewal reviews conducted since the 1996 GEIS have shown that housing has not been an issue at relicensed nuclear plants including those plants located in “sparsely populated areas.” Therefore, impacts to these resources are no longer anticipated from future license renewals. On the basis of these considerations, the NRC concludes that the impact of continued nuclear plant operations and refurbishment activities on population and housing would be small and is therefore considered a Category 1 issue.

Impacts on Local Transportation

Transportation impacts depend on the size of the workforce, the capacity of the local road network, traffic patterns, and the availability of alternate commuting routes to and from the plant. Because most sites have only a single access road, there is often congestion on these roads during shift changes.

Nevertheless, license renewal is not likely to affect local transportation conditions in the vicinity of a nuclear power plant beyond what is currently being experienced. Transportation impacts are ongoing and have become well established during the current licensing term for all nuclear power plants. As previously discussed, it is unlikely that the number of permanent operations workers would increase at a nuclear power plant during the license renewal term. While it was estimated in the 1996 GEIS that up to 60 additional workers per unit could be required during the license renewal term, subsequent environmental reviews have shown little or no need for additional operations workers. In addition, refurbishment activities, such as steam generator and vessel head replacement, have not required the numbers of workers and the months of time conservatively estimated in the 1996 GEIS. Consequently, employment at nuclear power plants during the license renewal term is expected to remain unchanged. Refurbishment impacts would be similar to what has been experienced during routine plant refueling and maintenance outages.

The increased number of workers at nuclear power plants during regularly scheduled plant refueling and maintenance outages have caused short-term increases in traffic volumes on roads in the vicinity of each plant. However, because of the relative short duration of these outages, increased traffic volumes have had little or no lasting impact. Therefore, there would be no transportation impacts during the license renewal term beyond those already being experienced. On the basis of these considerations, the NRC concludes that the impact of

continued operations and refurbishment activities on local transportation would be small and is therefore considered a Category 1 issue.

4.8.2 Environmental Consequences of Alternatives to the Proposed Action

Construction – The scale of the socioeconomic impacts would be related to the complexity of the facility and the size of the workforce. The duration of the impact would be determined by the time required to complete construction. Socioeconomic impacts may be more dramatic and disproportionately larger at greenfield sites located in rural areas. Overall, construction is expected to have a temporary effect on the local economy.

Most construction workers would be local. However, additional workers may be required from outside the immediate area. Because construction is temporary, most of the workforce would likely commute to the job site rather than relocate. Construction is likely to have limited impacts on most local services such as public utilities, public safety, tourism, and recreation. Materials needed for construction (e.g., sand, gravel, fill, etc.) are expected to be provided locally. However, the majority of construction materials and technology components are expected to be imported. Transportation impacts during construction would include commuter and truck material and equipment delivery traffic to and from the construction site.

Operation – A new power plant would have an ongoing effect on the local economy. The operational workforce would increase demand for social services. Impacts on socioeconomics would depend on site location. Property values for nearby private residences could be affected.

Impacts may be greater on communities in rural areas. Local economies have the potential to be directly or indirectly affected by changes in power plant operations. The power plant and the communities that support it can be described as a dynamic socioeconomic system. The communities provide the people, goods, and services required by power plant operations. Plant operations, in turn, create the demand and pay for the people, goods, and services in the form of wages, salaries, and benefits for jobs and dollar expenditures for goods and services. The measure of the communities' ability to support the demands of the power plant depends on their ability to respond to changing environmental, social, economic, and demographic conditions. Transportation impacts include increased commuter traffic during shift changes and deliveries of materials and equipment to the power plant.

4.8.2.1 Fossil Fuel Alternatives

Operation – Impacts would include transportation impacts associated with coal deliveries to the power plant (primarily by rail) and the removal of wastes and by-products.

4.8.2.2 New Nuclear Alternatives

Operation – The existence of the nuclear power plant could have a negative effect on recreation and tourism.

4.8.2.3 Renewable Alternatives

Operations – The operational impacts of alternative energy technologies on socioeconomics are presented in the following subsections. A small workforce would be required to operate alternative technology power plants.

Hydroelectric Energy Sources

The reservoir would create recreational opportunities including construction of parks, campgrounds, and boat ramps. Traffic in the vicinity of the dam could increase as a result of recreational opportunities created by the reservoir.

Geothermal

Recreation in the area could be adversely affected by noise, sites, and odors from plant operations.

Wind

Recreation may be adversely affected by the visual impact of the wind turbines. Transportation impacts are expected to be limited. Large vehicles could be required for the replacement of equipment.

Biomass

Increased truck and rail traffic bringing biomass fuel to the facility and removing solid wastes to offsite disposal facilities could impact local transportation.

Ocean Wave and Current

Some tourists and recreational users on coastal beaches could be affected by the sight and sound (helicopter and boat traffic). Wave energy devices that float on the ocean surface could affect navigation.

4.9 Human Health

4.9.1 Environmental Consequences of the Proposed Action – Continued Operations and Refurbishment Activities

Human health conditions at all nuclear power plants and associated transmission lines have been well established during the current licensing term. These conditions are expected to remain unchanged during the 20-year license renewal term.

4.9.1.1 Environmental Consequences of Normal Operating Conditions

This section provides an evaluation of the impacts of radiological, chemical, microbiological, EMFs, and other hazards on occupational personnel and members of the public from continued operation and refurbishment activities during the license renewal term. This evaluation extends to all U.S. commercial nuclear power reactors. For safe and reliable operation of a nuclear power plant, it is necessary to perform routine maintenance on plant systems and components. Maintenance activities conducted at nuclear power plants include inspection, surveillance, and repair and/or replacement of material and equipment to maintain the current licensing basis of the plant and ensure compliance with environmental and public safety requirements. Certain activities can be performed while the reactor is operating, and others require that the reactor be shut down. Long-term outages are scheduled for refueling and for certain types of repairs or maintenance activities, such as the replacement of steam generators for PWRs.

<u>Radiological Impacts</u>

Two environmental issues related to radiological exposure and risk are reviewed here: (1) occupational radiological exposure and (2) radiological exposure to the public, both of which would result from continued operation and refurbishment activities during the license renewal term. These issues were evaluated in the 1996 GEIS, but the impacts of refurbishment were considered separately from those of operations.

For the purposes of assessing radiological impacts, impacts are considered to be “small” if releases and doses do not exceed permissible levels in the NRC’s regulations. This definition of “small” applies to occupational doses as well as to doses to individual members of the public. Accidental releases or noncompliance with the standards could conceivably result in releases that would cause moderate or large radiological impacts. Such conditions are beyond the scope of regulations for controlling normal operations and providing an adequate level of

protection. Environmental consequences and human health effects of potential accidents are addressed in Section 4.9.1.2.

Occupational Radiological Exposure

The occupational radiological exposures from current operations at nuclear power plants are discussed in Section 3.9.1.2, and the risk estimates from this radiation exposure are discussed in Section 3.9.1.4.

In the 1996 GEIS, the impacts from occupational radiological exposure from refurbishment and continued operations were evaluated separately. To estimate radiation-related impacts on workers over the license renewal term, occupational radiation exposure was used as the environmental impact initiator that was quantified. It was assumed that occupational radiation exposure would change relative to current nuclear plant operations as a result of actions taken to support license renewal. To evaluate the impacts, two types of license renewal programs were considered: a “typical” or “mid-stream” license renewal program, and a “conservative” or “bounding” program (NRC 1996). Each program applied to both PWRs and BWRs. Thus, in all, four scenarios were considered. It was assumed that activities carried out in support of license renewal would be performed primarily during selected outages. Five types of outages were considered: normal refuelings, 5-year in-service inspection (ISI) outages, 10-year ISI outages, current-term refurbishment outages, and major refurbishment outages. The potential actions and activities that would be undertaken during these outages were identified. All of the rules and regulations, in particular, the Maintenance Rule (10 CFR 50.65, *Requirements for Monitoring the Effectiveness of Maintenance at Nuclear Power Plants*), were taken into account in developing typical license renewal or plant-life extension (NRC 1996). The occupational exposure for each of the five types of outages was estimated for all four scenarios (see Table 4.9.1.1–1).

For refurbishment efforts, dose estimates for activities during each of the four current-term refurbishment outages were 11 and 10 person-rem for PWRs and BWRs, respectively, for the typical case; and 200 and 191 person-rem, respectively, for the conservative case. Dose estimates for the assumed single period of major refurbishment were 79 and 153 person-rem for PWRs and BWRs, respectively, for the typical case; and 1380 and 1561 person-rem, respectively, for the conservative case. The issue was designated as a Category 1 issue in the 1996 GEIS.

Table 4.9.1.1–1. Additional Collective Occupational Dose (person-rem) for Different Actions Under Typical and Conservative Scenarios During the License Renewal Term

Outage Type	Typical BWR	Conservative BWR	Typical PWR	Conservative PWR
Normal refueling[(a)]	4	10	3	7
5-yr ISI[(b)] refueling[(c)]	71	27	30	35
10-yr ISI refueling[(d)]	91	108	51	66
Current-term refurbishment[(e)]	10	191	11	200
Major refurbishment outage[(f)]	153	1561	79	1380
Total all occurrences	457	2666	261	2374

(a) 8 occurrences, 2-month duration each.
(b) ISI = in service inspection.
(c) 2 occurrences, 3-month duration each.
(d) 1 occurrence, 4-month duration for conservative and 3-month duration for typical scenario.
(e) 4 occurrences, 4-month duration for conservative and 3-month duration for typical scenario.
(f) 1 occurrence, 9-month for conservative and 4-month duration for typical scenario.
Source: Tables 2.8 and 2.11 in the 1996 GEIS.

For continued operations during the license renewal term, the NRC observed in the 1996 GEIS that the greatest increment to occupational dose over the present dose would occur during a 10-year ISI refueling. In a typical case, the occupational dose would increase over the present dose by 91 person-rem for a BWR and by 51 person-rem for a PWR. In a conservative case, the occupational dose would increase over the present dose by 108 person-rem and 66 person-rem, respectively, for BWRs and PWRs. It was noted that there is about an 8 percent increase in collective radiation dose over current operating experience. The individual occupational doses would be well below regulatory limits (i.e., the impact would be small), and the issue was designated as a Category 1 issue.

For estimating the impacts from continued operation and refurbishment activities during the license renewal term in this GEIS revision, the occupational exposure histories for all commercial nuclear power plants were evaluated for trends.

Throughout the nuclear power industry, modification and upgrade activities have continued at each operating plant. They have included a broad range of activities in response to NRC requirements and industry initiatives, including post-Three-Mile-Island upgrades, radioactive waste system modifications, and spent fuel storage upgrades. In addition, several nuclear power plants have undergone major refurbishment efforts, such as PWR steam generator replacement and the replacement of coolant recirculation piping in BWRs. These activities offered a significant potential for occupational exposure. Thus, occupational exposure histories

accumulated to date reflect normal operation plus modifications and additions to existing systems. This information forms the basis for evaluating the occupational doses that result from refurbishment and continued operations during the license renewal term. The data in Tables 3.9-8 and 3.9-9 show that there are variations in occupational dose from year to year, but there is no consistent trend that shows that occupational doses are increasing over time.

Since 1996, about 30 nuclear power plants have undergone an environmental review for license renewal. Many nuclear power plants have already replaced major components like steam generators during their current license term. Moreover, as part of the license renewal application, the plants have conducted an aging management review. All of the plants expect to conduct the activities related to managing impacts from aging during plant operation or normal refueling and other outages, but they do not plan any outage specifically for the purpose of refurbishment. The applicants have indicated that the activities conducted during the license renewal term are expected to be within the bounds of normal operations; thus, even the typical scenario in the 1996 GEIS can be considered conservative.

Overall, data presented in Tables 3.9-3 to 3.9-13 provide ample evidence that occupational doses at all commercial power plants are far below the occupational dose limit of 5 rem/yr established by 10 CFR Part 20 and that the continuing efforts to maintain doses at as low as is reasonably achievable (ALARA) levels have been successful.

The wide range of annual collective doses experienced at PWRs and BWRs in the United States results from a number of factors, such as the reactor design, amount of required maintenance, and amount of reactor operations and in-plant surveillance. Because these factors can vary widely and unpredictably, it is very difficult to determine in advance a specific year-to-year annual occupational radiation dose for a particular plant throughout its operating lifetime. On occasion, relatively high collective occupational doses (as compared with the average annual collective dose) may be unavoidable, even at plants with radiation protection programs designed to ensure that occupational doses will be kept to ALARA levels.

During 2005, with occupational radiation protection programs in place, nuclear power plants maintained an annual average individual dose of 0.12 rem and 0.18 rem for PWRs and BWRs, respectively (Table 3.9-11), compared with an exposure limit of 5 rem. For all nuclear power plants combined, the occupational doses to individual workers are estimated to average 0.15 rem/yr (Table 3.9-4). At these dose levels, the average increase in fatal individual cancer risk to a worker is approximately 6×10^{-5}/yr (using the ICRP risk coefficient of 4×10^{-4}/rem from Table 3.9-20). If the reactor operates for 60 years, the cumulative increase in fatal cancer to an individual worker is estimated to be 3.6×10^{-3} (a 50 percent increase over the baseline of 40 years of operations). However, it is very unlikely that the same worker would be employed for all 60 years of plant operations.

The average collective occupational exposure for the year 2005 was roughly 171 person-rem per plant at BWRs and about 79 person-rem per plant at PWRs (Table 3.9-10). For 2005, 50 percent of the PWRs reported collective doses between 44 and 107 person-rem, while 50 percent of the BWRs reported collective doses between 94 and 198 person-rem (see Figure 3.9-1). For 2005, no worker received doses greater than 3 rem. Only 17 workers (0.01 percent) received an occupational dose exceeding 2 rem during 2005. At BWRs, less than 0.03 percent of the workers received doses greater than 2 rem. At PWRs, no worker received a dose greater than 2 rem, and less than 0.3 percent of the workers received doses greater than 1 rem (Table 3.9-12).

Over the years, ALARA programs continue to limit occupational doses. Occupational doses have shown a declining trend over the past 10 years and have recently leveled off. As plants age, there may be slight increases in radioactive inventories, which would result in slight increases in occupational radiation doses, but that trend has not yet appeared.

Overall, data presented in Tables 3.9-1 to 3.9-13 provide evidence that doses to nearly all radiation workers are far below the worker dose limit established by 10 CFR Part 20 and that the continuing efforts to maintain doses at ALARA levels have been successful.

It is expected that occupational doses from refurbishment activities associated with license renewal and occupational doses for continued operations during the license renewal term would be similar to the doses during the current operations and bounded by the analysis conducted in the 1996 GEIS. It is estimated that the occupational doses would be much less than the regulatory dose limits, as described above. Expected occupational radiation exposures meet the standard for being of small significance. No mitigation measures beyond those implemented during the current license term would be warranted, because the ALARA process continues to be effective in reducing radiation doses. The risks to an individual worker from radiological exposure would increase by 50 percent as a result of the plant operating for 20 more years, but it is unlikely that the same worker would be employed for all 60 years of plant operations.

In the 1996 GEIS, the NRC concluded that the occupational radiological exposure impact during license renewal and refurbishment would be small for all plants; it was therefore designated as a Category 1 issue. No new information has been identified in the SEISs prepared to date or the literature that would alter that conclusion. On this basis, the NRC concludes that the impact of continued operations and refurbishment activities on occupational radiological exposure would be small for all nuclear plants and remains a Category 1 issue.

Radiological Exposure to the Public

Radiological exposures to the public from current operations at nuclear power plants are discussed in Section 3.9.1.3. That section includes a discussion of the effluent pathways used in calculating dose and the radiological monitoring performed by each site to ensure that unanticipated buildup of radioactivity have not occurred in the environment. The risk estimates for the public from radiation exposure are discussed in Section 3.9.1.4.

Refurbishment Activities – To determine the relative significance of the estimated public dose from refurbishment, the public dose during the year refurbishment activities occurred was compared with the doses in consecutive years. Exposure from other ongoing support activities similar to those that occurred during the current license term (e.g., construction of new parking lots, access roads, and buildings) would be less than or equal to the impacts associated with refurbishment.

In the 1996 GEIS, the NRC identified the replacement of steam generators at PWRs and the replacement of recirculation piping at BWRs as the major anticipated refurbishment activities. Public radiation exposures from refurbishment activities during the license renewal term can be evaluated on the basis of information derived from past occurrences and projections for other repairs. Effluents anticipated during major refurbishment actions were estimated on the basis of historical information derived for steam generator replacements at PWRs and replacements of recirculation piping at BWRs. These refurbishment tasks have already taken place several times within the commercial nuclear power reactor industry. From these estimates, the maximum individual dose to the member of the public was compared with the design objective of Appendix I to 10 CFR Part 50 (Table 3.9-2) and with baseline effluents produced during normal reactor operations.

Public radiation exposures from gaseous and liquid effluents produced during refurbishment can be evaluated on the basis of effluent data from the replacement of steam generators and recirculation piping. During the replacement of steam generators and recirculation piping, releases of effluents have occurred under controlled conditions and in accordance with ALARA principles. Similar refurbishment efforts that may occur as part of the license renewal process would also take place under controlled conditions and in accordance with ALARA principles.

The first several plants to replace steam generators estimated the amounts of radioactivity expected to be released in liquid and gaseous effluents as a result of the repair (Parkhurst et al. 1983). Actual effluent measurements were performed in several cases. In the 1996 GEIS, the NRC listed the radioactive effluent releases for early steam generator replacements and compared them with typical 1986 effluent releases for PWRs and BWRs (see Table 3.10 in NRC 1996). It was found that the effluent releases were approximately the same or much less than those from normal operations for a year. For BWR recirculation piping

replacement, the NRC compared the annual release and dose commitment information for five reactor sites (Cooper, Monticello, Nine Mile Point, Peach Bottom, and Vermont Yankee) during recirculation piping replacement with the data from normal operations of the same plants. It was found that the radiation doses to the public were similar to or less than those resulting from normal operations (see Table 3.11 in NRC 1996). On the basis of this finding, the NRC concluded in the 1996 GEIS that gaseous effluents and liquid discharges occurring during a 9-month refurbishment action would not be expected to result in maximum individual doses exceeding the design objectives of Appendix I to 10 CFR 50 or the allowable EPA standards of 40 CFR Part 190 (Table 3.9-2).

For estimating the impacts from refurbishment activities during the license renewal term in this GEIS revision, radioactive effluent releases and the dose to the public from the gaseous and liquid effluent releases were evaluated for the three sites that have gone through steam generator replacement in recent years. The effluent releases and the doses that occurred during the year refurbishment was done are compared with the values for prior and subsequent years.

Table 4.9.1.1–2 presents the radioactive effluent releases at three sites that have had their steam generators replaced in recent years. For Arkansas Unit 2, the steam generator was replaced in 2000, and the effluent releases are listed from 1999 to 2003. For Calvert Cliffs Unit 1, the steam generator was replaced in 2002, for Unit 2, it was replaced in 2003. The effluent releases are listed from 2000 to 2004. For Palo Verde Unit 2, the steam generator was replaced in 2003. The effluent releases are listed from 2001 to 2005. For this site, there are no liquid effluent releases beyond the site boundary. The data show that the effluent releases for the year that the steam generators were replaced are on the same order of magnitude or much less than the effluent releases for the following year. The effluent releases were also much less than or on the same order of magnitude as those shown in Table 3.10 of the 1996 GEIS.

Table 4.9.1.1–3 presents the dose to the public from the gaseous and liquid effluent releases for the same three sites. No significant difference in the dose from normal operations was observed when the steam generator was replaced. All doses are much less than the design objectives shown in Table 3.9-2. Tables 4.9.1.1–2 and 4.9.1.1–3 show that effluents and dose impacts during the year when a steam generator replacement is performed do not differ significantly from those in years of normal operations.

It is expected that doses during any future recirculation piping replacement would not be much different than the doses shown in Table 3.11 in the 1996 GEIS. The NRC is updating these tables for recent year data. The NRC will also assess dose contributions from the numerous plants that have replaced reactor vessel heads.

When a major refurbishment is performed, it is expected that more work will be performed and thus the amounts of some of the effluents, especially atmospheric particulates and possibly some liquid effluents associated with decontamination, may be slightly greater than those found during the steam generator changeouts or recirculation piping replacements.

Continued Operations – During normal operations after license renewal, small quantities of radioactivity (fission, corrosion, and activation products) will continue to be released to the environment in a manner similar to that occurring during present operations (see Section 3.9.1). The concentration of radioactive materials in soils and sediments increases in the environment at a rate that depends on the rate of release and the rate of removal. Removal can take place through radioactive decay or through chemical, biological, or physical processes. For a given rate of release, the concentrations of longer-lived radionuclides and, consequently, the dose rates attributable to them would continue to increase if license renewal was granted.

Regulatory Guide 1.109 (NRC 1977) provides guidance for calculating the dose for significant release pathways. To account for the buildup of radioactive materials, buildup factors are included in the calculations. Initially, most of the calculations for the construction and operating stage permits used 15 years as the approximate midpoint of a facility's operating life. This value is now more often taken to be 20 years. The potential license renewal term is an additional 20 years; thus, the effective midlife is 30 years.

The accumulation of radioactive materials in the environment is of concern not only with regard to license renewal but also with regard to operation under current licenses. NRC reporting rules require that pathways that may arise as a result of unique conditions at a specific site be considered in licensees' evaluations of radiation exposures. If an exposure pathway is likely to contribute significantly to total dose (10 percent or more to the total dose from all pathways), it must be routinely monitored and evaluated. Environmental monitoring programs are in place at all sites to provide a backup to the calculated doses based on effluent release measurements. Since these programs are ongoing for the duration of the license, locations where unique situations give rise to significant pathways that are not detailed in NRC Regulatory Guide 1.109 are to be identified if and when they become significant. If such pathways result in doses at a plant exceeding the design objectives of Appendix I to 10 CFR Part 50, action is required.

The radiation dose to the public from current operations results from gaseous effluent releases and from liquid effluent releases, as presented in Section 3.9.1.3.3. At present, for all operating nuclear plants, doses to the maximally exposed individual (MEI) are much less than the design objectives of Appendix I to 10 CFR Part 50 (Table 3.9-2). No aspect of future operation has been identified that would substantially alter this situation.

Maximum individual doses are reported in annual effluent release reports, and if these doses exceed Appendix I to 10 CFR Part 50 design objectives, the NRC would pursue remedial

action. Thus these issues are handled on a case-by-case basis. Many plants have gone through license renewal, and no aging phenomenon that would increase public radiation doses has been identified. The operating reactors are not expected to reach regulatory dose limits more often in the period after license renewal than they do at present. For these reasons, dose impacts on MEIs in the public during future operation under license renewal are judged to be unchanged from those during present operations. The MEI dose ranges from 0.02 to 15.3 mrem/yr (see Table 3.9-16). At these dose levels, the increase in fatal cancer risk (using ICRP risk coefficients) to the MEI ranges from 1×10^{-8} to 7.7×10^{-6} for 1 year of reactor operations. Although dose rates (mrem/yr) are not expected to change during license renewal, the cumulative dose (total mrem) would increase as a result of 20 more years of operations. If the reactor operates for 60 years, it is estimated that the increase in fatal cancer risk to the MEI would range from 6×10^{-7} to 4.6×10^{-4} (a 50 percent increase over the baseline of 40 years of operation). However, it is unlikely that the same person would be exposed to these doses for 60 years of plant operations.

Table 4.9.1.1–2. Radioactive Effluent Releases for Three Nuclear Power Plants That Recently Replaced Steam Generators

	Releases (Ci) in Gaseous Effluent					Releases (Ci) in Liquid Effluent			
Year[a]	Fission and Activation Products	Gross Alpha	Iodines	Particulates	Tritium	Dissolved and Entrained Gases	Fission and Activation Products	Gross Alpha	Tritium
Arkansas Unit 2									
1999	3.9×10^{1}	0	0	3.9×10^{-5}	3.7×10^{1}	2.3×10^{-2}	8.5×10^{-2}	4.4×10^{-4}	5.9×10^{2}
2000	**4.5**	**3.4×10^{-7}**	**0**	**7.4×10^{-6}**	**2.0×10^{1}**	**2.1×10^{-1}**	**2.6×10^{-1}**	**1.2×10^{-1}**	**5.0×10^{2}**
2001	1.7×10^{-1}	0	0	0	2.4×10^{1}	5.0×10^{-3}	7.2×10^{-2}	8.9×10^{-4}	4.9×10^{2}
2002	4.6×10^{-1}	0	1.7×10^{-5}	0	2.8×10^{1}	5.3×10^{-2}	2.0×10^{-2}	0	5.6×10^{2}
2003	3.9×10^{-1}	0	1.0×10^{-6}	0	2.5×10^{1}	9.9×10^{-2}	3.7×10^{-2}	0	7.0×10^{2}
Calvert Cliffs Units 1 and 2[b]									
2000	9.7×10^{1}	ND[c]	5.8×10^{-4}	ND	3.7×10^{1}	1.2×10^{-1}	2.7×10^{-1}	1.4×10^{-4}	1.1×10^{3}
2001	7.3×10^{1}	ND	1.2×10^{-3}	ND	2.0×10^{1}	6.3×10^{-2}	6.8×10^{-1}	4.7×10^{-5}	1.4×10^{3}
2002	**1.1×10^{2}**	**ND**	**2.7×10^{-3}**	**ND**	**2.4×10^{1}**	**1.9×10^{-1}**	**3.1×10^{-1}**	**ND**	**9.6×10^{2}**
2003	**1.6×10^{2}**	**ND**	**1.8×10^{-3}**	**ND**	**2.8×10^{1}**	**8.9×10^{-2}**	**6.7×10^{-2}**	**ND**	**8.1×10^{2}**
2004	1.6×10^{2}	ND	1.5×10^{-3}	2.7×10^{-4}	2.5×10^{1}	3.5×10^{-1}	2.8×10^{-2}	ND	1.5×10^{3}
Palo Verde Unit 2[d]									
2001	1.9×10^{2}	ND	7.2×10^{-4}	2.8×10^{-4}	6.3×10^{2}	None	None	None	None
2002	1.7×10^{2}	ND	9.7×10^{-3}	2.2×10^{-4}	2.7×10^{2}	None	None	None	None
2003	**9.2×10^{1}**	**ND**	**6.4×10^{-3}**	**7.3×10^{-4}**	**1.1×10^{3}**	**None**	**None**	**None**	**None**
2004	8.7×10^{-1}	ND	1.2×10^{-5}	3.3×10^{-10}	4.8×10^{2}	None	None	None	None
2005	4.6	ND	1.1×10^{-4}	5.6×10^{-5}	6.2×10^{2}	None	None	None	None

(a) Years in which steam generators were replaced are presented in bold text.
(b) Steam generator was replaced for Unit 1 in 2002 and for Unit 2 in 2003. The site reported releases from both units together.
(c) ND = Not detected.
(d) There were no liquid effluent releases beyond the site boundary.
Sources: Sites' annual effluent release reports

Table 4.9.1.1–3. Dose to the Maximally Exposed Individual (MEI) from Gaseous and Liquid Effluent Releases for Three Nuclear Power Plants That Recently Replaced Steam Generators

	Gaseous Effluents				Liquid Effluents	
Year[a]	**Total Body (mrem)**	**Gamma (mrad)**	**Beta (mrad)**	**Critical Organ (mrem)**	**Total Body (mrem)**	**Critical Organ (mrem)**
Arkansas Unit 2						
1999	2.3×10^{-2}	1.2×10^{-3}	3.8×10^{-3}	2.4×10^{-2}	1.7×10^{-3}	2.1×10^{-3}
2000	**NA[b]**	**NA**	**NA**	**NA**	**NA**	**NA**
2001	1.5×10^{-2}	0	0	1.5×10^{-2}	1.0×10^{-3}	1.2×10^{-3}
2002	1.7×10^{-2}	0	1.0×10^{-4}	2.1×10^{-2}	1.6×10^{-3}	1.9×10^{-3}
2003	1.6×10^{-2}	0	1.0×10^{-4}	1.6×10^{-2}	1.3×10^{-3}	1.5×10^{-3}
Calvert Cliffs Units 1 and 2[c]						
2000	NR[d]	1.0×10^{-3}	7.0×10^{-3}	7.6×10^{-1}	3.0×10^{-1}	2.1×10^{-1}
2001	NR	1.0×10^{-3}	4.0×10^{-3}	3.5×10^{-2}	5.0×10^{-3}	4.3×10^{-1}
2002	**NR**	$\mathbf{1.0 \times 10^{-3}}$	$\mathbf{6.0 \times 10^{-3}}$	$\mathbf{1.7 \times 10^{-2}}$	$\mathbf{6.0 \times 10^{-3}}$	$\mathbf{2.0 \times 10^{-1}}$
2003	**NR**	$\mathbf{2.0 \times 10^{-3}}$	$\mathbf{1.0 \times 10^{-2}}$	$\mathbf{5.0 \times 10^{-2}}$	$\mathbf{2.0 \times 10^{-3}}$	$\mathbf{2.0 \times 10^{-2}}$
2004	NR	2.0×10^{-3}	8.0×10^{-3}	4.0×10^{-2}	2.0×10^{-3}	5.0×10^{-3}
Palo Verde Unit 2[e]						
2001	NR	1.6×10^{-2}	6.1×10^{-2}	2.4×10^{-1}	None	None
2002	NR	1.8×10^{-2}	5.3×10^{-2}	3.7×10^{-1}	None	None
2003	**NR**	$\mathbf{9.3 \times 10^{-3}}$	$\mathbf{3.1 \times 10^{-2}}$	$\mathbf{4.8 \times 10^{-1}}$	**None**	**None**
2004	NR	1.0×10^{-3}	5.0×10^{-4}	1.7×10^{-1}	None	None
2005	NR	2.9×10^{-3}	2.0×10^{-3}	2.2×10^{-1}	None	None

(a) Years in which steam generators were replaced are presented in bold text.
(b) NA = Site's effluent release report not available.
(c) Steam generator was replaced for Unit 1 in 2002 and for Unit 2 in 2003. The site reported doses from both units together.
(d) NR = Not reported in the site's effluent release report.
(e) There were no liquid effluent releases beyond the site boundary.
Sources: Sites' annual effluent release reports
To convert mrem to mSv multiply by 0.01.

One of the pathways considered in calculating the MEI doses is direct radiation from operating plants. Radiation fields are produced around nuclear plants as a result of radioactivity within the reactor and its associated components, low-level storage containers, and components such as steam generators that have been removed from the reactor (as described in Section 3.9). Direct radiation from sources within a light water reactor (LWR) plant is due primarily to nitrogen-16, a radionuclide produced in the reactor core by neutron activation of oxygen-16 from the water. Because the primary coolant of an LWR is contained in a heavily shielded area, dose rates in the vicinity of LWRs are generally undetectable and less than 1 mrem/yr at the site boundary. Some plants (mostly BWRs) do not have completely shielded secondary systems and may contribute some measurable offsite dose. However, these sources of direct radiation will be unaffected by license renewal.

In addition to the regulations within 10 CFR Part 20.1101 that speak directly to required operation under ALARA principles, 10 CFR Part 50.36a imposes conditions on licensees in the form of technical specifications on effluents from nuclear power reactors. These specifications are intended to keep releases of radioactive materials to unrestricted areas during operations to ALARA levels. Appendix I to 10 CFR Part 50 provides numerical guidance on dose-design objectives and limiting conditions for the operation of LWRs to meet the ALARA requirements. These regulations will remain in effect during the period of license renewal (see Section 3.9.1.1.2).

About 30 nuclear power plants that have gone through license renewal since 1996 have concluded that the radiation dose to the public will continue at current levels associated with normal operations and are expected to remain much lower than the applicable standards.

Offsite doses to the public attributable to refurbishment activities were examined for the MEI. Because the focus of the analysis is on annual dose, only the results based on the most likely major refurbishment action were examined (i.e., replacing steam generators in PWRs and primary recirculation piping in BWRs). For this action, doses to the public were found to be small. To date, effluents and doses during periods of major refurbishments have not been seen to differ significantly from those during normal operations. Consequently, gaseous effluents and liquid discharges occurring during major refurbishment actions are not expected to result in maximum individual doses exceeding the design objectives of Appendix I to 10 CFR Part 50 or the allowable EPA standards of 40 CFR Part 190 (Table 3.9-2).

Radiation doses to members of the public from the current operations of nuclear power plants have been examined from a variety of perspectives, and the impacts were found to be well within design objectives and regulations in each instance. No effect of aging that would significantly affect the radioactive effluents has been identified. Public doses are expected to remain well within design objectives and regulations. The cumulative cancer risk to the MEI

would increase by 50 percent because the plant would operate for 20 more years, but the risk would still be small when compared with the cancer risk from background radiation.

Because there is no reason to expect effluents to increase in the period after license renewal, doses from continued operation are expected to be well within regulatory limits. No mitigation measures beyond those implemented during the current term license would be warranted, because current mitigation practices have kept public radiation doses well below regulatory standards and are expected to continue to do so.

Public radiological exposure impacts during license renewal and refurbishment were considered to be small for all plants and were designated as Category 1 issues in the 1996 GEIS. No new information has been identified in the plant-specific SEISs prepared to date, the literature, or effluent and monitoring reports prepared by operating plants that would alter that conclusion. On the basis of these considerations, the NRC concludes that the impact of continued operations and refurbishment activities on public radiological exposure would be small for all nuclear plants and remains a Category 1 issue.

Chemical Hazards

In nuclear power plants, chemical effects could result from discharges of chlorine or other biocides, small-volume discharges of sanitary and other liquid wastes, chemical spills, or heavy metals leached from cooling system piping and condenser tubing. Impacts of chemical discharges to human health are considered to be small if the discharges of chemicals to water bodies are within effluent limitations designed to ensure protection of water quality, and if ongoing discharges have not resulted in adverse effects on aquatic biota. During the license renewal term, human health impacts from chemicals are expected to be the same as those experienced during operations in the original license term (see Section 3.9.2 for more details).

One environmental issue related to chemical hazards is reviewed here: the impact on human health from chemicals. This issue was not evaluated in the 1996 GEIS.

Human Health Impact from Chemicals

The types of chemical hazards that exist at a nuclear power plant are discussed in Section 3.9.2. Plant workers may encounter hazardous chemicals when the chemistries of the primary and secondary coolant systems are being adjusted, biocides are being applied to address the fouling of cooling system components, equipment containing hazardous oils or other chemicals is being repaired or replaced, solvents are being used for cleaning, or other equipment is being repaired. Exposures to hazardous chemicals are minimized when plant workers follow good industrial hygiene practices.

Reviews of the literature and operational monitoring reports and consultations with utilities and regulatory agencies that were done for the 1996 GEIS indicated that the effects of the discharge of chlorine and other biocides on water quality would be of small significance for all plants. Small quantities of biocides are readily dissipated and/or chemically altered in the body of water receiving them, so significant cumulative impacts to water quality would not be expected. Major changes in the operation of the cooling system are not expected during the license renewal term, so no change in the effects of biocide discharges on the quality of the receiving water is anticipated. Any such changes would require a separate NEPA review that would include an examination of human health effects. Effects of biocide discharges could be reduced by increasing the degree to which discharge water is treated, reducing the concentration of biocides, or treating only a portion of the plant cooling and service water systems at one time. Discharges of sanitary wastes are regulated by NPDES permit, and discharges that do not violate the permit limits are considered to be of small significance.

The effects of minor chemical discharges and spills at nuclear plants on water quality have been of small significance and mitigated as needed. Significant cumulative impacts on water quality would not be expected because the small amounts of chemicals released by these minor discharges or spills are readily dissipated in the receiving water body. Spills and off-specification discharges occur so seldom that regulatory agencies have not expressed any concern about them with regard to operating nuclear power plants. While there may be additional management practices or discharge-control devices that could further reduce the frequency of accidental spills and off-specification discharges, they are not warranted because impacts are already small and occur at a low frequency.

Heavy metals (e.g., copper, zinc, and chromium) may be leached from condenser tubing and other heat exchangers and discharged by power plants as small-volume waste streams or corrosion products. Although all are found in small quantities in natural waters (and many are essential micronutrients), concentrations in the power plant discharge are controlled in the NPDES permit because excessive concentrations of heavy metals can be toxic to aquatic organisms.

Nuclear power plants are required to submit to the Federal EPA and the State in which they are located annual reports on the environmental releases of listed toxic chemicals manufactured, processed, or otherwise used that are above Federally and State-identified threshold quantities. The disposal of essentially all of the hazardous chemicals used at nuclear power plants is regulated by Resource Conservation and Recovery Act (RCRA) or NPDES permits. The NRC requires nuclear power plants to operate in compliance with all of its permits, thereby minimizing adverse impacts to the environment and on workers and the public. It is anticipated that all plants will continue to operate in compliance with all applicable permits, and no mitigation measures beyond those implemented during the current term license would be warranted as a result of license renewal.

On the basis of these considerations, the health impact from chemicals to workers and the public is considered small at all nuclear plants. This is a Category 1 issue.

Microbiological Hazards

Some microorganisms associated with nuclear power plant cooling towers and thermal discharges can have deleterious impacts on the health of plant workers and the public. Certain microorganisms can benefit from thermal effluents. The potential for adverse health effects from microorganisms on nuclear power plant workers is an issue for plants that use cooling towers. Potential adverse health effects on the public from microorganisms in thermal effluents is an issue for nuclear plants that use cooling ponds, lakes, or canals, and that discharge to rivers. During the license renewal term, plant workers and members of the public would be exposed to microbiological hazards in the same way that they are exposed during operations in the original license term (see Section 3.9.3 for details).

Two environmental issues related to microbiological hazards are reviewed here: microbiological hazards to plant workers and microbiological hazards to the public. These two issues are the same as those evaluated in the 1996 GEIS (NRC 1996).

Microbiological Hazards to Plant Workers

The types of microbiological hazards that exist for nuclear power plant workers are discussed in Section 3.9.3. Pathogens of concern include *Salmonella* spp, *Shigella* spp, *Pseudomonas aeruginosa,* thermophilic fungi, *Legionella* spp, and *N. fowleri*. These species are all associated with nuclear plants that use cooling towers as part of their cooling water system. Because of the presence of these microorganisms, workers at nuclear power plants are typically required to use respiratory protection when cleaning cooling towers and condensers. Prairie Island Nuclear Generating Plant, which had high concentrations of *N. fowleri* in the circulating water, successfully controlled the pathogen and protected workers through chlorination before its yearly downtime operation (NRC 1980). The NRC has concluded that microorganisms that live in high-radiation and extreme heat conditions typical of the spent fuel pool do not pose a risk to plant workers (NRC 1999a).

No change in existing microbiological hazards is expected over the license renewal term. It is considered unlikely that any plants that have not already experienced occupational microbiological hazards would do so during the license renewal term or that hazards would increase over that period. It is anticipated that all plants will continue to employ proven industrial hygiene principles so that adverse occupational health effects associated with microorganisms will be of small significance at all sites, and no mitigation measures beyond those implemented during the current term license would be warranted. Aside from continued

application of accepted industrial hygiene procedures, no additional mitigation measures are expected to be warranted as a result of license renewal. This is a Category 1 issue.

Microbiological Hazards to the Public

N. fowleri which is the pathogenic strain of the free-living amoebae *Naegleria spp.*, appears to be the most likely microorganism that may pose a public health hazard resulting from nuclear power plant operations. Increased populations of *N. fowleri* may have significant adverse impacts. On entry into the nasal passage of a susceptible individual, *N. fowleri* will penetrate the nasal mucosa. The ensuing infection results in a rapidly fatal form of encephalitis. Fortunately, humans in general are resistant to infection with *N. fowleri*. Hallenbeck and Brenniman (1989) have estimated individual annual risks for primary amebic meningoencephalitis caused by the free-living *N. fowleri* to swimmers in freshwater to be approximately 4×10^{-6}. Exposure to *Legionella* spp. from power plant operations would not generally impact the public because concentrated aerosols of the bacteria would not traverse plant boundaries. The information available on microorganisms that may inhabit high-radiation, high-temperature environments (such as the spent fuel pool) indicates that they are very unlikely to significantly increase in number in the environment and that they would not have a deleterious effect on public health (NRC 1999a).

From the studies presented in Section 3.9.3, it is clear that heavily used bodies of freshwater merit special attention and also possibly routine monitoring for pathogenic *Naegleria*. Since *Naegleria* concentrations in freshwater can be enhanced by thermal effluents, nuclear power plants that use cooling lakes, canals, ponds, or rivers may enhance the populations of naturally occurring thermophilic organisms. There are currently 23 reactor sites that fit this category. Data for 14 sites from this category that have gone through license renewal were reviewed to predict the level of thermophilic microbiological organism enhancement at any given site with current knowledge. For all 14 sites, no actual hazards to public health from enhancement of thermophilic microbiological organisms were identified, documented, or substantiated. However, without site-specific data, the same conclusion cannot be drawn for all reactor sites that would go through license renewal.

Changes in microbial populations and in the public use of water bodies might occur after the operating license is issued and the application for license renewal is filed. Other factors could also change, including the average temperature of the water, which could result from climate change that affected water levels and air temperature. Finally, the long-term presence of a power plant might change the natural dynamics of harmful microorganisms within a body of water. Therefore, the magnitude of the potential public health impacts associated with thermal enhancement of thermophilic organisms could be small, moderate, or large, depending on plant-specific conditions. This hazard is a Category 2 issue.

Electromagnetic Fields

Nuclear power plants use power-transmission systems that consist of switching stations or substations located on the plant site and transmission lines located primarily offsite that connect the power plant to the regional electric grid. Electric fields and magnetic fields, collectively referred to as the electromagnetic field (EMF), are produced by operating transmission lines. During the license renewal term, members of the public who live, work, or pass near an associated operating transmission line may be exposed to the EMF in the same way that they are exposed during operations during the current license term (see Section 3.9.4 for more detail). The issue of potential chronic effects from the EMF surrounding a transmission line is the same as that presented in the 1996 GEIS. The issue is evaluated below by reviewing the relevant literature. It should be noted that the scope of the evaluation of transmission lines in this GEIS revision is reduced from that of the 1996 GEIS. For this revision, only those transmission lines currently needed to connect the nuclear power plants to the regional electric distribution grid are considered within scope. Thus, the number and length of the transmission lines being evaluated are greatly reduced.

Ongoing Research on the Effect of Electromagnetic Fields

In 1990, the EPA's Office of Health and Environmental Assessment reviewed epidemiology studies, chronic lifetime animal tests, and laboratory studies of biological phenomena related to carcinogenesis. The review indicated that some epidemiological studies found an association between EMF and certain types of cancers, but others did not find any association. It was concluded that the scientific issues concerning the relationship between EMF and adverse health effects are very complex and difficult to interpret (EPA 1990). Without an understanding of how these EMF fields are interacting with biological functions, the knowledge gained from scientific studies was of limited value both in evaluating the importance of the study results and in devising protection strategies for the public and for utility workers.

A substantial body of evidence has been accumulated indicating that EMF fields may influence biological function at exposure levels capable of producing relatively high current densities (10 to 100 mA/m^2) (IRPA/INIRC 1990). Such exposures have been suggested to induce chromosome aberrations, alter the distribution in molecular weights during protein synthesis, inhibit production of melatonin, alter calcium binding in brain tissue, influence RNA transcription, and produce a variety of other effects (OTA 1989). Questions concerning the potential carcinogenic effects of EMF field exposure have been raised as a result of suggestive epidemiological findings and some laboratory experiments. One accepted model on the development of cancer is the initiation-promotion paradigm (Easterly 1981). Most investigators conclude that EMF fields are not likely to act as initiators because they have not been shown to cause genetic damage (Aldrich and Easterly 1987). EMF effects on RNA transcription, however, could imply increased reduction of oncogene products, and some investigators

consider such data to be indicative of genetic effects (Goodman et al. 1987; Goodman and Henderson 1986, 1988). It has not been shown that EMF fields are cancer promoters, but the presence of some reported EMF biological effects reveals the need for further study of this issue (Byus et al. 1987).

In 1992, the U.S. Congress authorized the Electric and Magnetic Fields Research and Public Information Dissemination Program (EMF-RAPID) in the Energy Policy Act (Public Law 102-486). The National Institute of Environmental Health Sciences (NIEHS), National Institutes of Health (NIH), and DOE were designated to direct and manage a program of research and analysis aimed at providing scientific evidence to clarify the potential for health risks from exposure to EMF (NIEHS 1999).

Over the course of this program, DOE and NIEHS managed more than 100 cellular and animal studies, exposure assessment studies, and engineering studies. No additional epidemiology studies were conducted; however, analyses of the studies that had already been conducted were an important part of the assessments (NIEHS 2002). In 1998, NIEHS completed the review of a comprehensive body of scientific research on the potential health effects of EMF. NIEHS organized several technical symposia and a working group meeting to review EMF research. The working group was made up of scientists representing a wide range of disciplines (including engineering, epidemiology, cellular biology, medicine, toxicology, statistics, and pathology) brought together to review and evaluate the RAPID research and other research.

In June 1999, the NIEHS submitted the report, *NIEHS Report on Health Effects from Exposure to Power-Line Frequency Electric and Magnetic Fields* (i.e., extremely low frequency electromagnetic fields [ELF-EMFs]) to Congress. In part, the report (NIEHS 1999) concluded the following:

> The scientific evidence suggesting that ELF-EMF exposures pose any health risk is weak. The strongest evidence for heath effects comes from associations observed in human populations with two forms of cancer: childhood leukemia and chronic lymphocytic leukemia in occupationally exposed adults… In contrast, the mechanistic studies and the animal toxicology literature fail to demonstrate any consistent pattern across studies and the animal toxicology literature fail to demonstrate any consistent pattern across studies although some sporadic findings of biological effects have been reported. No indication of increased leukemia in animals has been observed…. Virtually all of the laboratory evidence in animals and humans and most of the mechanistic work done in cells fail to support a causal relationship between ELF-EMF at environmental levels and changes in biological function or disease status. The lack of consistent, positive findings in animal or mechanistic studies weakens the

> belief that this association is actually due to ELF-EMF, but it cannot completely discount the epidemiological findings.

The NIEHS concluded that ELF-EMF exposure cannot be recognized as entirely safe because of weak scientific evidence that exposure may pose a leukemia hazard. In the NIEHS opinion, this finding is insufficient to warrant aggressive regulatory concern. However, because virtually everyone in the United States uses electricity and is therefore routinely exposed to ELF-EMF, passive regulatory action is warranted, such as a continued emphasis on educating both the public and the regulatory community on ways in which to reduce exposure. NIEHS suggested that the power industry continue its current practice of siting power lines to reduce exposure and continue to explore ways to reduce the creation of magnetic fields around transmission and distribution lines without creating new hazards. NIEHS also encourages the use of technologies that lower exposures from neighborhood distribution lines, provided they do not increase other risks, such as those from accidental electrocution or fire. NIEHS does not believe that other cancers or noncancer outcomes provide sufficient evidence of a risk to warrant concern (NIEHS 1999).

In the United Kingdom, the National Radiological Protection Board (NRPB) established an independent Expert Advisory Group on Non-Ionizing Radiation (AGNIR) that reviewed scientific evidence relating possible adverse health effects to low-frequency EMFs (NPRB 2001, 2004). The earlier review (NRPB 2001) provided no firm evidence of a carcinogenic hazard to children or adults from exposure to normal levels of low-frequency EMFs, but made a number of recommendations for epidemiological studies and experimental work. The NRPB review in 2004 (NRPB 2004) concluded that currently, the results of these studies on EMF and health do not warrant quantitative restrictions on exposure to EMF. However, such studies, together with people's concerns, provide a basis for precautionary measures (NRPB 2004).

The World Health Organization (WHO) recently published an environmental health criteria monograph (WHO 2007) that addresses the possible health effects of ELF-EMF exposure. It reviewed the scientific literature on biological effects to assess the health risk from ELF-EMF exposure. It concluded the following about childhood leukemia:

> Scientific evidence suggesting that everyday, chronic low-intensity (above 0.3 to 0.4 μT) low-frequency magnetic field exposure poses a health risk is based on epidemiological studies demonstrating a consistent pattern of increased risk for childhood leukemia. Uncertainties in the hazard assessment include the role that control selection bias and exposure misclassification might have on the observed relationship between magnetic fields and childhood leukemia. In addition, virtually all of the laboratory evidence and the mechanistic evidence fail to support a relationship between low-level ELF magnetic fields and changes in biological function or disease status. Thus, on balance, the evidence is not

> strong enough to be considered causal, but sufficiently strong to remain a concern.

The potential for transmission line EMF to cause adverse health impacts in humans has been reviewed by many scientific groups. The hazard is assessed by a standard scientific approach that considers data from epidemiologic, laboratory, and biophysical studies. A number of epidemiologic studies have reported a small degree of association between measures of EMF and several diseases such as childhood leukemia. Other studies have failed to find an association. A causal basis for the EMF associations is not supported by laboratory and biophysical evidence, and the actual basis remains unexplained. Nonetheless, in 2002, the International Agency for Research on Cancer (IARC 2002) designated EMF as a class 2B carcinogen ("possibly carcinogenic"), on the basis of "consistent statistical associations of high-level residential magnetic fields with a doubling of the risk of childhood leukemia." The WHO (2007) monograph did not change the EMF classification on the basis of new human, animal, and in vitro studies published since the IARC (2002). In 2002, the California Department of Health Services issued a report (CADHS 2002) concluding that "EMFs can cause some degree of increased risk of childhood leukemia, adult brain cancer, Lou Gehrig's disease, and miscarriage." Kheifets et al. (2005) assessed the potential susceptibility of children to EMFs and recommended additional research and the development of precautionary policies.

The WHO (2007) monograph also reviewed literature that looked at a number of other diseases such as cancers in children and adults, depression, suicide, reproductive dysfunction, developmental disorders, immunological modifications, and neurological disease. On the basis of this review, it concluded the following:

> The scientific evidence supporting a linkage between ELF magnetic fields and any of these diseases is much weaker than for childhood leukemia and in some cases (for example, for cardiovascular disease or breast cancer) the evidence is sufficient to give confidence that magnetic fields do not cause the disease.

Extensive investigations of animals exposed at much higher levels of magnetic fields (up to 5 mT) have not demonstrated adverse health effects (Boorman et al. 2000). The elevated levels of EMF exposure in occupational settings likewise do not show a consistent pattern of increased risk for acute myocardial infarction or chronic coronary heart disease (Sahl et al. 2002). Laboratory studies of cells and tissues do not support the hypothesis that EMF exposure at ambient levels is a significant risk factor for human disease (NIEHS 1999). The failure to observe biological effects from EMF exposure may be due to the fact that, mechanistically, effects of EMF on biology are very weak (Valberg et al. 1997) or the association between the epidemiological results on childhood leukemia and EMF be the result of chance or a confounding factor (Draper et al. 2005).

Transmission Line Exposures Relative to Domestic Exposures

An important question regarding regulations is whether transmission line exposures contribute significantly to total EMF field exposures. In most cases, fields produced inside the home by appliances and electrical wiring are greater than the contributions from transmission line fields. Exceptions to this rule are individuals living next to a high-voltage transmission line ROW. Also relevant is the fact that exposures to transmission line fields are considered more continuous than those to appliance fields because transmission line fields permeate large areas (e.g., an entire home). Fields generated by appliances are generally more localized, resulting in intermittent exposures as individuals move around and as the appliances are turned on and off.

The earth's atmosphere produces slowly varying electric fields that average less than a few hundred V/m, and the earth's core produces a steady magnetic field in a range from about 0.3 to 0.6 G. Near appliances, the magnetic fields can be high, but they diminish sharply with distance. Table 4.9.1.1–4 shows the magnetic fields at different distances from household appliances (HCCP 2007). Typical house wiring and appliances contribute a 60-Hz magnetic field that can be up to about 3 mG (not in the vicinity of appliances). Some comparisons (of induced currents) among transmission line exposures, domestic exposures, and exposures

Table 4.9.1.1–4. Magnetic Fields at Different Distances from Household Appliances

	Magnetic Fields (mG) at Different Distances		
Household Appliance	**3 cm**	**30 cm**	**100 cm**
Microwave oven	750–2000	40–80	3–8
Fluorescent lamp	400–4000	5–20	0.1–3
Electric cooking stove	60–2000	4–40	0.1–1
Television	25–500	0.4–20	0.1–2
Clothes washer	8–400	2–30	0.1–2

Source: HCCP 2007

used in biological effects experiments can be made by using induced current density as an exposure metric. According to data provided in OTA (1989), field strengths on the ROW of a 500-kV line induce body currents that are higher than those induced by domestic exposures produced by typical electrical appliances. A comparison with the results of biological effects experiments (OTA 1989) shows that while current densities in many biological effects experiments are higher than those typically induced by household exposures, some current densities are significantly lower. These comparisons are based, however, on average current

densities predicted in humans, because EMF dosimetry has not advanced to the point of determining specific current densities in various tissues and organs. Moreover, researchers have not identified what field characteristics are important biologically.

Conclusion on Electromagnetic Fields

A review of the biological and physical studies of 60-Hz EMFs did not find any consistent evidence that would link harmful effects with field exposures. EMF fields are unlike other agents that have a toxic effect (e.g., toxic chemicals and ionizing radiation) in that dramatic acute effects cannot be forced, and longer-term effects, if real, are subtle. Nonetheless, a wide range of biological responses have been reported to be affected by EMF fields.

Even if clear adverse effects were apparent in the epidemiology literature or with some biological assay, considerable additional work would be required to determine how and what to mitigate, because evidence suggests that some EMF biological effects do not follow the typical "more intensity is worse" relationship. Furthermore, there may be a subtle relationship between the intensity of the local geomagnetic field and the appearance of effects for some intensities of 60-Hz fields. This complicating evidence points to the fact that, while much experimental and epidemiological evidence has been accrued, the pieces still do not fit together very well.

Because of inconclusive scientific evidence, the chronic effects of EMF are considered uncertain, and currently, no generic conclusion on human impacts is possible. The NRC will continue to monitor the research initiatives – both those within the national EMF program and others internationally – to evaluate the potential carcinogenicity of EMF fields as well as other progress in the EMF study disciplines. If the NRC finds that the appropriate Federal health agencies have reached a consensus that there are adverse health effects, all future license renewal applicants will have to address the health effects in the license renewal process.

<u>Other Hazards</u>

Two additional human health issues are addressed in this section: (1) human health impacts from physical occupational hazards and (2) human health impacts from shock hazards from transmission lines. The human health impact from occupational hazards was not discussed in the 1996 GEIS. The human health impact from shock hazards is the same as that evaluated in the 1996 GEIS.

Nuclear power plants are industrial facilities that have many of the typical occupational hazards found at any other electric power generation utility. Workers at or around nuclear power plants would be involved in some electrical work, electric power line maintenance, repair work, and maintenance activities and exposed to some potentially hazardous physical conditions

(e.g., excessive heat, cold, and pressure). The issue of physical occupational hazards is generic to all nuclear power plants.

Transmission lines are needed to transfer energy from the nuclear power plant to consumers. The workers and general public at or around the nuclear power plants and along the transmission lines are exposed to the potential for acute electrical shock from these lines. The issue of electrical shock is generic to all nuclear power plants.

During the license renewal term, human health impacts from physical occupational hazards and acute shock hazards would be the same as those from operations during the original license term (see Section 3.9.5 for more detail).

Physical Occupational Hazards

The types of occupational hazards that exist at a nuclear power plant are discussed in Section 3.9.5. The issue of occupational hazards is evaluated by comparing the rate of fatal injuries and nonfatal occupational injuries and illnesses in the utility sector with the rate in all industries combined. Occupational hazards can be minimized when workers adhere to safety standards and use appropriate personal protective equipment; however, fatalities and injuries from accidents can still occur. Data for occupational injuries from the U.S. Bureau of Labor Statistics for 2005 (BLS 2005a,b,c) indicate that the rate of fatal injuries in the utility sector is less than the rate for many sectors (construction; transportation and warehousing; agriculture, forestry, fishing, and hunting; wholesale trade; and mining) and that the incidence rate for nonfatal occupational injuries and illnesses is the least for electric power generation, followed by electric power transmission control and distribution (see Section 3.9.5). The fatality rate for electric power line installers and repairers can be estimated at 0.032 percent (BLS 2005a). It is expected that over the license renewal term, workers would continue to adhere to safety standards and use protective equipment, so adverse occupational impacts would be of small significance at all sites, and no mitigation measures beyond those implemented during the current license term would be warranted. The impact of these hazards is a Category 1 issue.

Shock Hazards

The greatest hazard from a transmission line is direct contact with the conductors. Tower designs preclude direct public access to the conductors. However, electrical contact can be made without physical contact between a grounded object and the conductor. Secondary shock currents are produced when humans make contact with (1) capacitively charged bodies, such as a vehicle parked near a transmission line, or (2) magnetically linked metallic structures, such as fences near transmission lines. A person who contacts such an object could receive a shock and experience a painful sensation at the point of contact. The intensity of the shock

would depend on the EMF strength, size of the object, and how well the object and person were insulated from ground.

Design criteria for nuclear power plants that limit hazards from steady-state currents are based on the National Electrical Safety Code (NESC), adherence to which requires that utility companies design transmission lines so that the short-circuit current to ground produced from the largest anticipated vehicle or object is limited to less than 5 mA (IEEE 2007). With respect to shock safety issues and license renewal, three points must be made. First, in the licensing process for the earlier licensed nuclear plants, the issue of electrical shock safety was not addressed. Second, some plants that received operating licenses with a stated transmission line voltage may have chosen to upgrade the line voltage for reasons of efficiency, possibly without reanalysis of induction effects. Third, since the initial NEPA review for those utilities that evaluated potential shock situations under the provision of the NESC, land use may have changed, resulting in the need for a reevaluation of this issue. The electrical shock issue, which is generic to all types of electrical generating stations, including nuclear plants, is of small significance for transmission lines that are operated in adherence with the NESC. Without a review of the conformance of each nuclear plant's transmission lines with NESC criteria, it is not possible to determine the significance of the electrical shock potential generically; it could be small, moderate, or large. The impact of this hazard is a Category 2 issue.

4.9.1.2 Environmental Consequences of Postulated Accidents

Chapter 5 of the 1996 GEIS assessed the impacts of postulated accidents at nuclear power plants (NPPs) on the environment. The postulated accidents included design basis accidents and severe accidents (e.g., those with core melt). The impacts considered included:

- Dose and health effects of accidents (5.3.3.2 through 5.3.3.4);
- Economic impacts of accidents (5.3.3.5); and
- Impact of uncertainties on results (5.3.4).

The estimated impacts were based upon the analysis of severe accidents at 28 NPPs,[(a)] as reported in the Environmental Impact Statements (EIS) and/or Final Environmental Statements (FES) prepared for each of the 28 plants in support of their operating licenses. With few exceptions, the severe accident analyses were limited to consideration of reactor accidents

(a) The 28 sites are listed in Table 5.1 of the 1996 GEIS. There are a total of 44 units included in this list, but 4 of these units never operated (Grand Gulf 2, Harris 2, Perry 2, and Seabrook 2). For the purpose of this document, this list will be referred to as containing 28 NPPs, but when mean values are calculated for this subset of NPPs, all 40 units that operated are considered.

caused by internal events. The GEIS addressed the impacts from external events qualitatively. The severe accident analysis for the 28 plants was extended to the remainder of plants whose EISs did not consider severe accidents (since such analysis was not required at the time the other plants' EISs were prepared). The estimates of environmental impact contained in the 1996 GEIS used 95th percentile upper confidence bound (UCB) estimates whenever available. This provides conservatism to cover uncertainties, as described in Section 5.3.3.2.2 of the 1996 GEIS. The 1996 GEIS concluded that the probabilistically weighted consequences and impacts were small compared to other risks to which the populations surrounding NPPs are routinely exposed.

Appendix E of this document provides an update on postulated accident risk. Since the NRC's understanding of accident risk has naturally evolved since the issuance of the 1996 GEIS, Appendix E assesses more recent information on postulated accidents that might alter the conclusions in Chapter 5 of the 1996 GEIS. This update considers how these developments would affect the conclusions in the original GEIS, and provides comparative data where appropriate.

The different sources of new information can be generally categorized by their effect of either decreasing, not affecting, or increasing the best-estimate environmental impacts associated with postulated severe accidents. Those areas where a decrease in best-estimate impacts would be expected are:

- New internal events information (decreases by an order of magnitude), and
- New source term information (significant decreases).

Areas likely leading to either a small change or no change include:

- Use of BEIR-VII risk coefficients.

Last, those areas leading to an increase in best-estimate impacts would consist of:

- Consideration of external events (comparable to internal event impacts),
- Power uprates (small to moderate increase),
- Higher fuel burnup (small to moderate increases),
- Low power and reactor shutdown events (could be comparable to internal event impacts), and

- Spent fuel pool accidents (could be comparable to internal event impacts).

Given the difficulty in conducting a rigorous aggregation of these results, with the differences in the information sources utilized, a fairly simple approach is taken. The latter group contains three areas where the increase could be comparable to the current risk and two areas where the increase could approach 30–40 percent. The net increase from these five areas would therefore be (in a simplistic sense) approximately 470 percent[(a)] (increase by a factor of 4.7). The reduction in risk due to newer internal event information would account for a decrease by a factor of 5 to 100. Some of the reduction in internal event risk is due to newer source term information, so this area will not be double-counted here. The net effect of an increase on the order of 500 percent and a decrease on the order of 500 percent to 10,000 percent would be than lower estimated impacts.

Furthermore, even if one assumed that the net effect of the new information was no change in risk, the information provided throughout Appendix E demonstrates that the level of conservatism in the upper bound estimates utilized in the 1996 GEIS is much larger than the individual (or cumulative) deltas from the updated information. In particular, Section E.3.1 of Appendix E demonstrated that the 1996 GEIS values were a factor of 2 to 4 higher than the underlying EIS values.

With respect to uncertainties, the 1996 GEIS contained an assessment of uncertainties in the information used to estimate the environmental impacts. Section 5.3.5 of the 1996 GEIS discusses the uncertainties and concludes that they could cause the impacts to vary anywhere from a factor of 10 to a factor of 1,000. This range of uncertainties bounds the uncertainties discussed in Section E.3.9 of Appendix E of this document, which ranged from a factor of 3 to 10, as well as the uncertainties brought out by the other sources of new information.

Given the discussion in Sections E.3.1 through E.3.8 in Appendix E of this document, it is concluded that the reduction in environmental impacts from the use of new information outweighs any increases resulting from new considerations. As a result, the findings in the 1996 GEIS remain valid. In addition, it is reasonable based on the discussion in Appendix E that, in license renewal applications, the impacts from reactor accidents at full power (including internal and external events) should continue to be considered in assessing Severe Accident Mitigation Alternatives (SAMAs). The impacts of all other new information do not contribute sufficiently to the environmental impacts to warrant their inclusion in the SAMA analysis, since the likelihood of finding cost-effective plant improvements is small. However, alternatives to

(a) This approximation simply assumes that each comparable area results in an increase of 100% and the other two areas (uprates and burnup) each result in an increase of 35%.

mitigate severe accidents still must be considered for all plants that have not considered such alternatives. The table below provides a summary of the conclusions discussed above.

Table 4.9.1.2–1. Summary of Issues Covered in Appendix E

Topic (Section)	Conclusions
New Internal Events Information (Section E.3.1)	New information on the risk and environmental impacts of severe accidents caused by internal events indicates that PWR and BWR core damage frequencies (CDFs) are generally comparable to or less than those forming the basis of the 1996 GEIS. In some cases, these differences are significant (approaching 1 order of magnitude). Comparison of population dose from newer assessments illustrates a reduction in impact by a factor of 5 to 100 when compared to older assessments, and an additional factor of 2 to 4 due to the conservatism built into the 1996 GEIS values. This would also mean that contamination of open bodies of water and economic impacts would, in most cases, be significantly less. Additionally, the likelihood of basemat melt-through accidents is significantly less than that used in the analysis supporting the 1996 GEIS.
Consideration of External Events (Section E.3.2)	The 1996 GEIS did not explicitly consider severe accidents initiated by external events in assessing environmental impacts. When the environmental impacts of external events are considered, they can be comparable to those from internal events; however, they are generally significantly lower than the estimates used in the 1996 GEIS. This conclusion would also apply to the contamination of open bodies of water, groundwater and economic impacts.
New Source Term Information (Section E.3.3)	Increased peak fuel burn-up from 42 to 75 Gwd/mt for PWRs, and 60 to 75 Gwd/mt for BWRs, is estimated to result in small to moderate increases (up to 38%) in the environmental impacts in the event of a severe accident.
Power Uprates (Section E.3.4)	Based on a comparison of the change in large early release frequency (LERF) for extended power uprates, a small to moderate increase in environmental impacts results from the increase in operating power level.
Higher Fuel Burn-up (Section E.3.5)	Increased peak fuel burn-up from 42 to 75 GWd/MT for PWRs, and 60 to 75 GWd/MT for BWRs, is estimated to result in small to moderate increases (up to 38 percent) in the environmental impacts in the event of a severe accident.
Consideration of Low Power and Reactor Shutdown Events (Section E.3.6)	In summary, it is concluded that the environmental impacts from accidents at low power and reactor shutdown conditions are generally comparable to those from accidents at full power when comparing the NUREG/CR-6143 and NUREG/CR-6144 values to NUREG-1150 values. Even so, the 1996 GEIS estimates of the environmental impact of severe accidents bound the potential impacts from accidents at low power and reactor shutdown. Finally, as cited above and discussed in SECY-97-168, industry initiatives taken during the early 1990s have also contributed to the improved safety of low power and reactor shutdown operation.

Table 4.9.1.2–1. (Cont.)

Topic (Section)	Conclusions
Consideration of Spent Fuel Pool Accidents (Section E.3.7)	In summary, it is concluded that the environmental impacts from accidents at spent fuel pools (SFPs) (as quantified in NUREG-1738) can be comparable to those from reactor accidents at full power (as estimated in NUREG-1150). Subsequent analyses performed, and mitigative measures employed since 2001 have further lowered the risk of this class of accidents. In addition, even the conservative estimates from NUREG-1738 are much less than the impacts from full power reactor accidents as estimated in the 1996 GEIS.
Use of BEIR-VII Risk-Coefficient (Section E.3.8)	The current process and scope of SAMA analysis is sufficient for determining the need for additional mitigative measures.
Uncertainties (Section E.3.9)	The impact and magnitude of uncertainties, as estimated in the 1996 GEIS, bound the uncertainties introduced by the new information and considerations.
SAMAs (Section E.4)	The current process and scope of SAMA analysis is sufficient for determining the need for additional mitigative measures.
Summary/Conclusion (Section E.5)	Given the new and updated information, the reduction in estimated environmental impacts from the use of new internal event and source term information outweighs any increases from the consideration of external events, power uprates, higher fuel burn-up, low power and reactor shutdown risk, and SFP risk.

4.9.2 Environmental Consequences of Alternatives to the Proposed Action

Construction – Impacts on workers are expected to be similar to those experienced during construction of any major industrial facility. Impacts from construction of combustion-based renewable energy facilities are expected to be the same as those for construction of fossil fuel facilities. Construction would increase traffic on local roads, which could affect the health of the general public. Human health impacts would be the same for all facilities whether located on greenfield sites, brownfield sites, or at an existing nuclear plant. Personal protective equipment, training, and engineered barriers would protect the workforce.

Summaries of statistics maintained by the U.S. Department of Labor, Bureau of Labor Statistics (Meyer and Pegula 2006) indicate that construction activities are responsible for a significant share of workplace accidents. In 2004, the construction industry accounted for 1 in 5 fatal workplace injuries and 1 in 10 nonfatal workplace injuries. With a workforce of 10,272,000 workers in 2004, the private construction industry registered 1234 total fatalities in the following categories: falls, 445 (36 percent); transportation incidents, 287 (23 percent) (highway 148,

non-highway 45, worker struck by vehicle/mobile equipment, 78); contact with objects and equipment, 267 (18 percent) (struck by object, 150; caught in or crushed in collapsing materials 71); exposure to harmful substances and environments, 170 (14 percent); and contact with electric current, 122 (10 percent). Over that same period, of a total of 401,000 nonfatal injuries and illnesses in the construction industry (nonfatal injuries that resulted in at least one day away from work) totaled 153,200 in the following categories: overexertion, 30,460 (20 percent); struck by object, 27,950 (18 percent); fall to lower level, 20,950 (14 percent); fall to same level, 12,700 (8 percent); and struck against object, 12,720 (8 percent).

4.9.2.1 Fossil Energy Alternatives

Environmental Consequences of Normal Operating Conditions

Operations – In 2006, the U.S. Department of Labor's (DOL's) Bureau of Labor Statistics revealed 134,400 individuals employed in the fossil fuel electric power generation industrial sector (North American Industry Classification System (NAICS) Code 221112) (DOL 2007a). For 2006 (DOL 2007b), DOL documented 17 total fatalities for all of the electric power generating industrial sector (NAICS Code 22111) and 5 fatalities for fossil fuel electric power generation. In 2006, the nonfatal injury and illness incident rate was 3.9 cases per 100 fulltime workers, slightly higher than the incident rate of 3.1 cases per 100 full-time workers for the entire electric power generation sector. Total reportable incidents occurred at a rate of 2.2 per 100 full-time workers. Those incidents that resulted from lost time at work occurred at a rate of 1.2 cases per 100 full-time workers.

Human health risks are associated with the management and disposal of coal combustion waste. Human health risks may extend beyond the facility workforce to human and are proximate to the coal combustion waste disposal facility. The character and the constituents of coal combustion waste depend on both the chemical composition of the source coal and the technology used to combust it. Generally, the primary sources of adverse consequences from coal combustion waste are the presence of leachable, toxic (and, in some cases, carcinogenic) heavy metals primarily contained in fly ash and bottom ash, especially arsenic, selenium, and mercury. With future implementation of regulations limiting mercury emissions, the amount of mercury present in coal combustion waste is expected to rise, and, depending on the particular chemical speciation, the amount of leachable mercury in coal combustion waste may also increase. Depending on the coal source, radionuclides may also be present in coal combustion waste.

The EPA is considering regulations specific to disposal of coal combustion waste under the authority of Subtitle D of the Resource Conservation and Recovery Act (RCRA) (EPA 2007b). Preliminary (draft) risk assessments of historical disposal practices for coal combustion waste in landfills and surface water impoundments identified both direct and indirect (food chain

contamination) pathways for human exposure. Overall, when all types of landfills and surface impoundments are evaluated in aggregate, the cancer risk criterion for arsenic (1×10^{-6}) can be exceeded for both unlined units (5×10^{-4}) and clay-lined units (2×10^{-4}). Arsenic cancer risks are higher for unlined surface impoundments (9×10^{-3}) and for clay-lined units (3×10^{-3}). Composite (synthetic) liners, which have been used in the majority of the most recently constructed landfills and surface impoundments, greatly reduce infiltration of leachable constituents, so much so that risks at all percentiles fall below both the cancer and noncancer risk criteria for both landfills and surface impoundments.

Although future alternative power generating facilities are most likely to use offsite disposal of coal combustion waste, some short-term storage of coal combustion waste (either in open piles or in surface impoundments) is likely to take place onsite, thus establishing the potential for leaching of toxic constituents into the local environment. Mobility studies indicate that toxic constituents take hundreds to thousands of years to leach through the bottoms of landfills and less than 100 years to leach through the bottom surface impoundments. However, because each batch of coal combustion waste would likely remain in interim onsite storage for only a short period, the potential for release of toxic constituents into the environment is greatly reduced. Offsite disposal facilities would be designed and operated in a manner that minimizes impacts from leached constituents.

Environmental Consequences of Accidents

Accidents involving fossil fuel energy sources that affect the functionality of the boiler or the steam cycle would have the most significant impacts. Steam explosions and other mechanical failures have the potential for adverse consequences on the workforce, but are not likely to directly affect the surrounding public or natural resources. Failures of pollution control devices would have an immediate but short-term impact on the environment because of the resulting release of pollutants. However, operating permits would require immediate shutdown of combustion sources whose pollution control devices became inoperative and prohibit continued operation that bypasses the failed control device. However, pollution control device failures, as well as other accidents that are sufficiently severe so as to require the shutdown of operations, would result in indirect impacts on the public in the form of reduced available power and possible short-term brownouts or blackouts. Although power might be restored relatively quickly, longer-term impacts may include a temporary rise in the levelized cost of electricity.

Overall, impacts on the environment from accidents at a fossil-fuel fired plant are expected to be short-lived and small. Longer-term impacts on socioeconomics could be anticipated both as a result of job loss and (temporary) higher costs of energy, but overall would be expected to be small.

4.9.2.2 New Nuclear Alternatives

Environmental Consequences of Normal Operating Conditions

Operations – Operational human health impacts for a new nuclear plant would include radiation exposure to the public (at very low levels) and to the operational workforce; impacts from exposure to microbiological organisms; occupational safety risks; impacts from electromagnetic fields; and exposure to chemicals used onsite by the workers. Impacts on human health, in most cases, were determined to be small in 10 CFR Part 51, Appendix B, Table B-1, and although the table is specific to license renewal, similar human health impacts would be expected from the operation of a new nuclear facility. Human health impacts would be the same for all facilities, whether located on greenfield sites, brownfield sites, or sites located at a previously existing nuclear plant, and are expected to be small.

Environmental Consequences of Accidents

A detailed analysis of postulated accidents in currently operating reactors (affected by license renewal) is provided in Section 4.9.1.2. Although the analysis is specific to license renewal, the impacts are representative of the impacts expected for new reactors. As previously discussed, the new reactor designs incorporate additional safety features not found in currently operating reactors. As a result, it is expected that the risks associated with the new reactors would be comparable to or less than the risks associated with currently operating reactors. Before a license is granted, the application for a new reactor would undergo a detailed safety and environmental review to ensure that the plant, if constructed, would operate in accordance with all applicable NRC rules and regulations.

4.9.2.3 Renewable Alternatives

Operations – The operational impacts of alternative energy technologies on human health are presented in the following subsections.

Hydroelectric Energy Sources

Impacts on workers include working near energized systems and high pressure water.

Geothermal

Operating workers could be affected by exposure to toxic gases and other constituents present in geothermal fluids, energized systems, including high pressure and high temperature gases and fluids, and electromagnetic fields associated with the generation, conditioning, and

transmission of electricity. Workers could be affected by exposure to toxic constituents, including boron, arsenic, radon, and mercury.

Wind

Operational hazards for the workforce include working at heights, near rotating mechanical or energized equipment, and working in extreme weather. Additional hazards unique to offshore wind farms include navigating and working in heavy seas. Potential impacts to workers and the public include ice thrown from rotor blades and blades thrown from mechanical failure and disintegration. Potential impacts also include EMF exposure, aviation safety, electromagnetic interference, and exposure to low-frequency sound.

Biomass

Human health risks to workers are expected to be similar to workers in a coal combustion facility. Work hazards include exposure to heat, gases, chemicals, high temperature liquids, and energized mechanical and electrical equipment. The potential exists for exposure to inhalable particulates and polyaromatic hydrocarbons (PAHs) resulting from incomplete combustion of complex organic molecules. The public could be affected by fugitive dust and contaminated water.

Municipal Solid Waste, Refuse-Derived Fuel and Landfill Gas

Combustion of municipal solid waste and/or refuse-derived fuel may result in the release of constituents that are persistent, bioaccumulative, and toxic, PAHs, and chlorinated hydrocarbons. The workforce as well as nearby residents could be affected by the release of toxic constituents to the air. The workforce could also be affected by exposure to toxic wastes.

Solar Thermal

Potential hazards to workforce include exposure to extremely hot heat transfer fluids or burned from misaligned mirrors and contact with energized system components.

Solar Photovoltaic

Workers could be exposed to airborne toxic heavy metals (e.g., cadmium) and silicon if the photovoltaic cell loses integrity from a fire. Workers could also inhale silicon dust if the integrity of photovoltaic cells was compromised by an accident.

Ocean Wave and Current

Operation of wave- and current-energy capturing systems would not be expected to affect human health. Workers could be affected by possible exposure to energized systems, inclement weather conditions, and high sea states. Workers could be affected by work underwater inspecting and repairing cables and tethers.

4.10 Environmental Justice

4.10.1 Environmental Consequences of the Proposed Action – Continued Operations and Refurbishment Activities

Impacts of nuclear plant operations and refurbishment on minority and low-income populations living in the vicinity of nuclear power plants were not addressed in the 1996 GEIS because guidance for implementing Executive Order 12898 was not available at the time. Environmental justice was listed in Table B-1 in Appendix B, Subpart A, of 10 CFR Part 51, but was not assigned an issue category or impact significance. The finding stated that "The need for and the content of an analysis of environmental justice will be addressed in plant-specific reviews."

The analysis evaluated the potential for disproportionately high and adverse human health and environmental effects on minority and low-income populations that could result from nuclear plant operations and refurbishment of a nuclear power plant. Adverse health effects are measured in terms of the risk and rate of fatal or nonfatal adverse impacts on human health. Disproportionately high and adverse human health effects occur when the risk or rate of exposure to an environmental hazard for a minority or low-income population is significant and exceeds the risk or exposure rate for the general population or for another appropriate comparison group. Minority and low-income populations are subsets of the general public residing around the site, and all are exposed to the same risks and hazards generated from various operations at the nuclear plant site. Continued operations and other activities associated with license renewal could affect air, land, water, and ecological resources in the region around each nuclear power plant site, which might, create health and other environmental effects on the general population. Depending on the proximity of minority and low-income populations in relation to each nuclear plant, the environmental impacts of license renewal could have a disproportionate effect on these populations.

There is considerable variation in the representation of minority and low-income populations within 50 mi (80 km) of each nuclear power plant site. Sites located in the southern and southwestern United States have large minority populations (e.g., Browns Ferry, Brunswick,

Catawba, Farley, North Anna, Robinson, Summer, and Surry plants). Sites located close to metropolitan areas also have larger minority populations as well as larger low-income populations (e.g., Dresden, Ginna, Indian Point, and Pilgrim plants).

The location and significance of environmental impacts may affect population groups that are particularly sensitive because of their resource dependencies or practices (e.g., subsistence agriculture, hunting, or fishing) that reflect the traditional or cultural practices of minority and low-income populations. The analysis of special pathway receptors can be an important part of the identification of resource dependencies or practices. Special pathways take into account the levels of contaminants in native vegetation, crops, soils and sediments, surface water, fish, and game animals on or near the power plant sites in order to assess the risk of radiological exposure through subsistence consumption of fish, native vegetation, surface water, sediment, and local produce; the absorption of contaminants in sediments through the skin; and the inhalation of airborne particulates. All licensed nuclear plants have a comprehensive radiological environmental monitoring program to assess the impact of site operations on the environment. Samples are collected from the aquatic and terrestrial pathways applicable to these sites. Aquatic pathways include fish, surface water, and sediment; terrestrial pathways include airborne particulates, radioiodine, milk, food products, crops, and direct radiation. Concentrations of contaminants in native vegetation, crops, soil, sediment, surface water, fish, and game animals in areas surrounding nuclear power plants have generally been found to be quite low (at or near the threshold of detection) and seldom above background levels.

Pathways associated with continued operations and other activities at nuclear plants associated with the license renewal might affect human populations were considered. Also considered was the extent to which minority and low-income populations in the area around these plants could be disproportionately affected, through resource dependencies and practices (e.g., subsistence agriculture, hunting, or fishing). In addition, plant-specific impacts that could affect minority and low-income populations were also identified at nuclear power plants. Although the overall impact of nuclear plants on the general population has usually been found to be small, because of these unique considerations, the additional examination of the nature and geographic extent of impacts and population demographics should be considered on a plant-specific basis.

On the basis of these considerations, the impact of continued operations and other activities on minority and low-income populations could be small to moderate, depending on the plant and site-specific conditions, and is therefore determined to be a Category 2 issue.

4.10.2 Environmental Consequences of Alternatives to the Proposed Action

Construction – Minority and low-income populations could be affected by the construction of a power plant. The extent of disproportionate effect is difficult to determine since it would depend on the location of the plant. For example, increased demand for rental housing during

construction could disproportionately affect low-income populations. However, demand for rental housing could be mitigated if the plant is constructed near a metropolitan area. Power plants would likely be sited at brownfield sites situated near low-income and minority populations. Construction would also create employment opportunities for minority and low-income individuals. However, construction at a brownfield site could disproportionately affect minority and low-income populations residing in the vicinity of the proposed plant site. Minority and low-income populations may be disproportionately affected by air emissions and noise from construction and by increased truck and commuter traffic.

Increased fossil fuel consumption may affect employment opportunities and environmental conditions in low-income regions that supply the fossil fuel. Power plants that rely on fossil fuels would likely be sited at brownfield sites situated near low-income and minority populations.

Operation – Low-income populations that rely on subsistence consumption of fish and wildlife, living near power plants could be disproportionately affected. Minority and low-income populations may be disproportionately affected by air emissions and noise from facility operation and by increased truck and commuter traffic.

4.11 Waste Management and Pollution Prevention

4.11.1 Environmental Consequences of the Proposed Action – Continued Operations and Refurbishment Activities

The effects of license renewal (including operations and refurbishment that would occur during the license renewal term) on waste management is presented in this section. Baseline conditions at operating reactors are discussed in Section 3.11. License renewal is expected to result in a continuation of these conditions for an extended period commensurate with the license renewal term, usually 20 years. The annual quantities of waste generated during the license renewal term are not expected to change from the amount generated during the current licensed term. However, the accumulated quantity of waste material needing long-term storage or disposal is expected to be approximately 50 percent larger.

The impacts associated with onsite waste management activities at nuclear plants are addressed in other parts of Chapter 4 under various resource discussions. These activities include waste collection, treatment, packaging, and loading onto conveyance vehicles for shipment offsite. These activities are considered to be part of the normal operations at the site. For example, the annual radioactive effluent release reports issued by the sites include a summary of radioactive effluent releases from all the facilities on the site, including the waste management and storage facilities. The same reports also provide data on volume and

radioactivity content of solid radioactive waste shipped offsite for processing and disposal. Similarly, the radiological environmental monitoring program conducted at each site measures the direct radiation as well as environmental concentrations of all radionuclides originating at the site as well as background radiation. The impact from the transportation of wastes from the reactor to a third-party waste treatment center or directly to a disposal site is addressed generically in Table S-4 in 10 CFR 51.52 (see Section 4.2.212.1.1).

The issues that are addressed in this section are

- Low-level radioactive waste (LLW) storage and disposal,
- Onsite storage of spent nuclear fuel,
- Offsite radiological impacts of spent nuclear fuel and high-level waste disposal,
- Mixed waste storage and disposal, and
- Nonradiological waste storage and disposal.

These are five of the nine issues evaluated in the 1996 GEIS (NRC 1996) in the chapter on the uranium fuel cycle and waste management. They relate to waste management at all nuclear fuel cycle facilities, including nuclear power plants. The other four issues, which pertain specifically to aspects of the uranium fuel cycle other than the nuclear power plants themselves, are addressed in Section 4.2.212.1.1. As discussed in Section 4.2.212.1.1, the other nuclear fuel cycle facilities include uranium mining and milling, uranium hexafluoride (UF_6) production, isotopic enrichment, fuel fabrication, fuel reprocessing, and disposal facilities.

Low-Level Radioactive Waste Storage and Disposal

Section 3.11.1.1 provides the quantities and characteristics of LLW that are normally generated at nuclear plants under routine operating conditions. As stated in the introduction to Section 4.11.1, these baseline conditions are expected to continue during the license renewal term.

Prior to July 1, 2008, most of the LLW generated at reactor sites is shipped offsite for disposal either immediately after generation or after a brief storage period onsite (see Section 3.11.1.1). This trend is expected to continue. However, the Barnwell disposal facility in South Carolina, ceased accepting waste from States that are not a part of the Atlantic compact as of July 2008. As a result, the only remaining disposal facility that is available to those 36 States and to the nuclear power plant operators in those States is the EnergySolutions facility in Clive, Utah, which is licensed to accept only Class A LLW. Under these circumstances, the options

available to the nuclear power plants in those States are to store their Class B and C (and Class A as appropriate) wastes onsite or offsite until a disposal facility becomes available. Such activities are conducted in accordance with NRC regulations and any applicable State or local requirements. One new facility is being developed by the Waste Control Specialists in Texas for the Texas compact, comprised of Texas and Vermont. That facility is currently undergoing licensing procedures by the State of Texas (an NRC agreement State).

The NRC believes that the comprehensive regulatory controls that are in place and the low public doses being achieved at reactors ensure that the radiological impacts on the environment will remain small during the term of a renewed license. The maximum additional onsite land that may be required for LLW storage during the term of a renewed license and associated impacts would be small. Nonradiological impacts on air and water would be negligible. The radiological and nonradiological environmental impacts of long-term disposal of LLW from any individual plant at licensed sites are small. In addition, the NRC concludes that there is reasonable assurance that sufficient LLW disposal capacity will be made available when needed for facilities to be decommissioned consistent with NRC decommissioning requirements.

On the basis of the above considerations, the impact of license renewal on LLW storage and disposal is considered small for all sites. As in the 1996 GEIS, this issue is considered to be a Category 1 issue.

In addition to being generated at the reactor sites, LLW is also generated from the rest of the uranium fuel cycle as part of the front-end operations during the mining and milling of uranium ores and during the steps leading up to the manufacture of new fuel. If the recycling option is made available and the decision is made to reprocess the spent fuel in the United States, the reprocessing operations would also generate LLW. The impacts associated with management of LLW from these other fuel cycle operations are addressed in Table S-3 in 10 CFR 51.51 (see Section 4.12.1.1).

Onsite Storage of Spent Nuclear Fuel

The Commission determined, in the 1996 GEIS, that on-site storage of spent fuel during the term of a renewed operating license is a Category 1 issue. Under the Waste Confidence Rule, the NRC has determined that spent fuel can be stored onsite for at least 30 years beyond the current license (which may include the term of a revised or renewed license) operating life of nuclear power plants safely and with minimal environmental impact. Further, the Commission also concluded that continued storage of existing spent fuel and storage of spent fuel generated during the license renewal term can be accomplished safely and without significant environmental impacts, as radiological impacts will be well within regulatory limits. The

following discussion provides information regarding the NRC staff's further consideration of additional potential impacts of onsite storage of spent nuclear fuel.

As discussed in Section 3.11.1.2, spent nuclear fuel is currently stored at reactor sites either in spent fuel pools or in ISFSIs. This onsite storage practice is expected to continue until an ultimate repository for spent fuel and HLW is established and DOE takes possession of the spent fuel. DOE's current plans estimate that the Yucca Mountain repository will start operating sometime around the 2017 to 2020 time frame. However, the license application for the Yucca Mountain repository is a separate and independent review that is being performed by the NRC outside the regulatory scope of license renewal.

Interim storage needs vary among plants, with older units likely to lose pool storage capacity sooner than newer ones. Given the uncertainties in the opening of a geologic repository at Yucca Mountain and the lack of other options for DOE to take possession of spent fuels, as originally envisioned in the Nuclear Waste Policy Act (NWPA), it is likely that future expanded spent fuel storage capacity will be needed at all nuclear power plants. The NWPA, as amended, prohibits the emplacement of more than 70,000 metric tonnes of heavy metal (MTHM) (154 million lb of heavy metal) in the first repository for spent nuclear fuel disposal until a second repository is in operation. DOE has indicated that of the 70,000 MTHM initially to be approved for the first repository, 63,000 MTHM (139 million lb of heavy metal) will come from commercial spent nuclear fuel and the remaining 7000 MTHM (15.4 million lb of heavy metal) will be DOE materials (DOE 2002b). Under existing licenses, the cumulative spent fuel generation for commercial plants could exceed 63,000 MTHM in the early to mid 2010s. To be able to dispose of all of the spent fuel in a geologic repository like Yucca Mountain, even without any license renewals, additional disposal capacity would be required in the form of an expansion of the capacity of the first repository or construction of a second repository.

In 2006, The DOE announced a new initiative called the Global Nuclear Energy Partnership (GNEP), and is currently preparing an EIS for its implementation. The GNEP initiative calls for recycling of spent nuclear fuel in advanced reactors and, in the process, decrease the quantity of material that needs to be disposed of in a geologic repository by an estimated factor of 50 to 100 (DOE 2007b). Consequently, if GNEP is implemented, there will be sufficient disposal capacity in the first repository for all the existing reactors, with or without license renewal. However, the outcome of GNEP is still uncertain, and the demonstration of the proposed GNEP fuel recycling facilities is not expected until about 2020 (DOE 2006a). The actual facilities would be expected to come on line some time after that if the implementation phase proceeds as planned. A full implementation of the GNEP initiative, in its intended form, would likely further reduce the onsite storage burden for commercial nuclear plants, and potentially further reduce the impacts of onsite storage of spent nuclear fuel.

As discussed in the 1996 GEIS, current and potential environmental impacts from spent fuel storage onsite at the current reactor sites have been studied extensively and are well understood. The storage of spent fuel in spent fuel pools was considered for each plant in the safety and environmental reviews at the construction permit and operating license stage. The NRC has studied the safety and environmental effects from the temporary storage of spent fuel after the cessation of reactor operations, and it published a generic determination of no significant environmental impact (the Waste Confidence Rule) in its regulations at 10 CFR 51.23. 10 CFR 51.23 (a) states:

> The Commission has made a generic determination that, if necessary, spent fuel generated in any reactor can be stored safely and without significant environmental impact for at least 30 years beyond the licensed life for operation (which may include the term of a revised or renewed license) of that reactor at its spent-fuel storage basin or at either on-site or off-site independent fuel storage installations. Further, the Commission believes that there is reasonable assurance that at least one mined geological repository will be available within the first quarter of the twenty-first century, and sufficient repository capacity will be available within 30 years beyond the licensed life for operation of any reactor to dispose of the commercial high-level waste and spent fuel originating in such reactor and generated up to that time.

As cited in the *Federal Register* on October 9, 2008 (73 FR 59547), the Commission undertook another review of its Waste Confidence findings as part of an effort to enhance the efficiency of combined operating license proceedings for applications for nuclear power plants anticipated in the near future. To assure that its Waste Confidence findings are up to date, the Commission has proposed to update two of the rule's findings. Public comment was requested on the proposed changes. After a thorough review of the comments, a final version of the rule will be issued. The Commission proposed that the second and fourth findings in the Waste Confidence Decision be revised as follows:

Finding 2: The Commission finds reasonable assurance that sufficient mined geologic repository capacity can reasonably be expected to be available within 50–60 years beyond the licensed life for operation (which may include the term of a revised or renewed license) of any reactor to dispose of the commercial high-level radioactive waste and spent fuel originating in such reactor and generated up to that time.

Finding 4: The Commission finds reasonable assurance that, if necessary, spent fuel generated in any reactor can be stored safely without significant environmental impacts for at least 60 years beyond the licensed life for operation (which may include the term of a revised or renewed license) of that reactor in a combination of storage in its spent fuel storage basin and either onsite or offsite independent spent fuel storage installations.

In its proposed amendments to 10 CFR 51.23 (a), the Commissions stated:

> Section 51.23 (a) would be amended to provide the Commission's generic determination that, if necessary, spent fuel generated in any reactor can be stored safely and without significant environmental impacts beyond the licensed life for operation (which may include the term of a revised or renewed license) of that reactor at its spent fuel storage basin or at either onsite or offsite ISFSIs until a disposal facility can reasonably be expected to be available.

If revised, the proposed 10 CFR 51.23(a) would continue to support the NRC staff's finding in the 1996 GEIS that spent fuel can be stored onsite with minimal environmental impact.

After considering the information presented above regarding other potential additional impacts related to onsite storage of nuclear spent fuel, the NRC concludes that the issue remains a Category 1 issue, and that no new information has altered this conclusion.

Offsite Radiological Impacts from Disposal of Spent Nuclear Fuel and High-Level Waste

In the 1996 GEIS, the Commission determined offsite radiological impacts (spent fuel and high level waste disposal) to be a Category 1 issue. Furthermore, the ultimate disposal of spent nuclear fuel in a potential future geologic repository is a separate and independent licensing action that is outside the regulatory scope of license renewal. However, because of questions and concerns that have been raised regarding this issue during scoping for the GEIS, the following discussion provides relevant information with respect to developments pertaining to the consideration of an ultimate repository site for the disposal of spent nuclear fuel.

At the time the 1996 GEIS was issued, there were no established regulatory limits for offsite releases of radionuclides from the ultimate disposal of spent nuclear fuel and HLW, since a candidate repository site had not been established. It was assumed that for such a site, limits would eventually be developed along the lines of those given in the 1995 National Academy of Sciences (NAS) report, "Technical Bases for Yucca Mountain Standards.

On February 15, 2002, on the basis of a recommendation by the Secretary of Energy, the President recommended the Yucca Mountain site for the development of a repository for the geologic disposal of spent nuclear fuel and HLW. Congress approved this recommendation on July 9, 2002, in Joint Resolution 87, which designated Yucca Mountain as the repository for spent nuclear waste. On July 23, 2002, the President signed Joint Resolution 87 into law. Public Law 107-200, 116 *Statutes at Large* (Stat.) 735 of 2002 designates Yucca Mountain as the site for the development of the repository for spent nuclear waste.

Subsequently, the EPA developed Yucca-Mountain-specific repository release standards, which were also adopted by the NRC in 10 CFR Part 63 (see 74 *FR* 10811). These standards:

- Establish a dose limit of 15 millirem (0.15 mSv) per year for the first 10,000 years after disposal;
- Establish a dose limit of 100 millirem (1.0 mSv) annual exposure per year between 10,000 years and 1 million years;
- Require the Department of Energy to consider the effects of climate change, earthquakes, volcanoes, and corrosion of the waste packages to safely contain the waste during the 1 million-year period; and
- Are consistent with the recommendations of the NAS by establishing a radiological protection standard for this facility at the time of peak dose up to 1 million years after disposal.

On June 3, 2008, the DOE submitted a license application to the NRC, seeking authorization to construct a geologic repository for the disposal of spent nuclear fuel and high-level waste at Yucca Mountain, Nevada. As part of the site characterization and recommendation process for the proposed geologic repository at Yucca Mountain, Nevada, the DOE is required by the Nuclear Waste Policy Act of 1982 to prepare an EIS. By law, the NRC is required to adopt DOE's EIS, to "the extent practicable," as part of any possible NRC construction authorization decision. DOE submitted the following NEPA documents along with its application, which include analyses that address radiological impacts to workers and the public.

- *Final Environmental Impact Statement for a Geologic Repository for the Disposal of Spent Nuclear Fuel and High-Level Radioactive Waste at Yucca Mountain, Nye County, Nevada* (FEIS) (February 2002) (DOE/EIS-0250F) (ML032690321)
- *Final Supplemental Environmental Impact Statement for a Geologic Repository for the Disposal of Spent Nuclear Fuel and High-Level Radioactive Waste at Yucca Mountain, Nye County, Nevada* (Repository SEIS) (June 2008) (DOE/EIS-0250F-S1) (ML081750191)

The NRC formally accepted for docketing DOE's license application for Yucca Mountain, Nevada on September 8, 2008. In its acceptance, NRC staff also recommended that the Commission adopt, with further supplementation, the EIS and supplements prepared by DOE (73 *FR* 53284). With respect to radiological impacts, DOE's FEIS and Repository SEIS indicate that the disposal of spent nuclear fuel and high-level waste would be small with exposures well below regulatory limits. As of the publishing date of this draft GEIS, the license application for

Yucca Mountain continues to be reviewed by the NRC staff as a separate and independent licensing action outside the regulatory scope of license renewal and the GEIS.

This information regarding the ultimate disposal of spent nuclear fuel and high-level waste does not alter the 1996 GEIS findings that impacts associated with such a proposed spent nuclear fuel and high-level radioactive waste disposal facility would not be sufficiently large to require the NEPA conclusion, for any plant, that the option of extended operation under 10 CFR Part 54 should be eliminated. Accordingly, although the Commission has not assigned a single level of significance to the impact of spent fuel and HLW disposal, this issue is considered to be a Category 1 issue.

Storage and Disposal of Nonradioactive Waste

This issue addresses the storage and disposal of nonradioactive waste generated at commercial nuclear power plants and during the rest of the uranium fuel cycle during the license renewal term. Nonradioactive waste consists of hazardous and nonhazardous waste. Storage and disposal of hazardous waste generated at nuclear plants is discussed in Section 3.11.2. As indicated in that section, nuclear plants generate small quantities of hazardous waste during operation and refurbishment. A special class of hazardous waste, known as universal waste, consisting of commonly used yet hazardous materials (batteries, pesticides, mercury-containing equipment, and lamps), is also generated. Similar types of hazardous wastes are also generated at other uranium-fuel-cycle facilities. The management of hazardous wastes generated at all of these facilities, both onsite and offsite, is strictly regulated by the EPA or the responsible State agencies per the requirements of RCRA.

As does any industrial facility, nuclear power plants and the rest of the uranium-fuel-cycle facilities also generate nonradioactive nonhazardous waste (see Section 3.11.4). These wastes are managed by following good housekeeping practices and are generally disposed of in local landfills permitted under RCRA Subtitle D regulations.

In the 1996 GEIS, the impacts associated with managing nonradioactive wastes at uranium fuel cycle facilities, including nuclear power plants, were found to be small. It was indicated that no changes to nonradioactive waste generation would be anticipated for license renewal, and that systems and procedures are in place to ensure continued proper handling and disposal of the wastes at all plants. The issue was considered a Category 1 issue in the 1996 GEIS, and no new information that would alter this conclusion has been identified.

Storage and Disposal of Mixed Waste

This issue addresses the storage and disposal of mixed waste generated at nuclear power plants and other uranium-fuel-cycle facilities during the license renewal term. As discussed in

Section 3.11.3, nuclear power plants generate small quantities of mixed waste. Other uranium-fuel-cycle facilities are also expected to generate small quantities of mixed waste. Mixed waste is regulated both by the EPA or the authorized State agency under RCRA and by the NRC or the Agreement State agency under the Atomic Energy Act (AEA; Public Law 83-703). The waste is either treated onsite or sent offsite for treatment followed by disposal at a permitted landfill.

The comprehensive regulatory controls and the facilities and procedures that are in place at nuclear power plants ensure that the mixed waste is properly handled and stored and that doses to and exposure to toxic materials by the public and the environment are negligible at all plants. License renewal will not increase the small but continuing risk to human health and the environment posed by mixed waste at all plants. The radiological and nonradiological environmental impacts from the long-term disposal of mixed waste at any individual plant at licensed sites are considered small for all sites. The issue was considered a Category 1 issue in the 1996 GEIS, and no new information that would alter this conclusion has been identified.

4.11.2 Environmental Consequences of Alternatives to the Proposed Action

Construction – Construction-related wastes include various fluids from the onsite maintenance of construction vehicles and equipment (e.g., used lubricating oils, hydraulic fluids, glycol-based coolants, spent lead-acid storage batteries) and incidental chemical wastes from the maintenance of equipment and the application of corrosion-control protective coatings (e.g., solvents, paints, coatings), construction-related debris (e.g., lumber, stone, and brick), and packaging materials (primarily wood and paper). All materials and wastes would be accumulated onsite and disposed of or recycled through licensed offsite disposal and treatment facilities. Life-cycle management of chemicals and wastes generated during construction and pollution prevention initiatives (such as spill prevention plans) will serve to mitigate the impact of wastes. The impacts of waste management are expected to be the same for greenfield, brownfield, and existing nuclear power plant sites.

Operation – Solid wastes would be generated throughout the period of plant operations. The character of wastes would depend on chemical constituents of the fuel, efficiency of combustion, and operational efficiencies of the various air pollution control devices. Wastes routinely associated with the maintenance of mechanical and electrical equipment include: used lubricating oils and hydraulic fluids, cleaning solvents, corrosion control paints and coatings, and dielectric fluids.

4.11.2.1 Fossil Fuel Alternatives

Operation – Solid wastes in the form of coal combustion waste (and, in some instances, flue gas desulfurization sludge and spent catalysts) would be generated during plant operations.

The exact character of the coal combustion waste would depend on the chemical constituents of the coal, efficiency of the combustion device, and operational efficiencies of the various air pollution control devices.

4.11.2.2 New Nuclear Alternatives

Operation – Liquid, gaseous, and solid radioactive waste management systems would be used to collect and treat radioactive materials during operations. Waste processing systems would be designed to meet the objectives of Appendix I to 10 CFR Part 50. The primary source of radioactive waste from a new nuclear facility is fission products that escape from the fuel rods into the reactor coolant. Coolant could also become contaminated from neutron activation of the primary cooling system. LLW disposal is assumed to occur at an offsite location, while spent fuel would be stored onsite either in spent fuel pool storage or aboveground dry storage.

Nonradioactive effluent and wastes include cooling water and steam condensate blowdowns that contain various water-treatment chemicals or biocides, wastes from the onsite treatment of cooling water and steam cycle water, floor and equipment drain effluent, stormwater runoff, laboratory waste, trash, hazardous waste, effluent from the sanitary sewer system, miscellaneous gaseous emissions, and liquid and solid effluent. Liquid effluents would be regulated by NPDES permits. All other wastes would be properly disposed of in accordance with Federal, State, and local regulations. Waste impacts for a nuclear plant are described in Section 4.11.1 and in 10 CFR 51, Appendix B, Table B-1. Impacts are expected to be small for all facilities, whether located on greenfield sites, brownfield sites, or at existing nuclear plant sites.

4.11.2.3 Renewable Alternatives

Operations – The operational impacts of alternative energy technologies on waste management are presented in the following subsections.

Geothermal

Small amounts of industrial solid wastes associated with onsite maintenance of equipment and infrastructure would be generated, including: used oils, used glycol-based antifreeze, waste lead-acid storage batteries, spent cleaning solvents, and excess corrosion control coatings. Operational solid wastes could include precipitates (scale) resulting from cooling and depressurized hydrothermal fluids that must be periodically removed from equipment; some precipitates may include naturally occurring radioactive material (NORM).

Wind

Minimal amounts of wastes are generated from the maintenance of wind turbines; wastes consist mainly of spent lubricating and gear oils removed from equipment during routine preventive maintenance, small amounts of battery electrolyte from onsite back-up power systems, and minor amounts of solvents and coatings from ongoing corrosion control activities. Modern turbine designs allow for the easy removal of malfunctioning equipment for replacement and repair; consequently, wastes generated onsite would be limited to preventive maintenance-related wastes.

Biomass

Major operating wastes would include fly ash and bottom ash that results from the combustion of the carbonaceous fuels. Scrubbers for control of sulfur oxide emissions would not be expected to be needed for units combusting wood and energy crops that have little to no sulfur content. Temporary storage of operational solid wastes onsite could affect local ecological systems, especially surface waters.

Municipal Solid Waste, Refuse-Derived Fuel and Landfill Gas

Small amounts of industrial solid wastes typically associated with maintenance of equipment and infrastructure would be generated, including used oils and lubricants, used glycol-based coolants, waste lead-acid batteries, spent cleaning solvents, and excess corrosion control wastes. Operating wastes also would include small amounts of sanitary wastewaters and sanitary solid wastes from support of the workforces. Toxic constituents in municipal solid waste or refuse-derived fuel could cause solid wastes from air pollution devices to become hazardous due to leachability of toxic constituents. Sanitary wastewater and well as wastewaters from industrial operations would be containerized and removed to offsite treatment; cooling water blowdown and steam cycle blowdown may be discharged to the land surface or to surface impoundments. Temporary storage of operational solid wastes on site could impact local ecological systems, especially surface waters.

Solar Thermal

Spills and leaks of the heat transfer fluids could occur; affected soil would need to be removed and disposed of properly. Routine maintenance-related wastes would be expected. Spills or leaks from electrical components could create waste dielectric fluids (all assumed to be free of polychlorinated biphenyls [PCBs]).

Solar Photovoltaic

Proper precautions would have to be made for the disposal of solar cells, although recycling of materials would reduce impacts.

Ocean Wave and Current

Wastes associated with facility operation would include small amounts of wastes related to facility maintenance, including waste lubricating oils, hydraulic fluids, cleaning solvents, and protective corrosion-control paints and coatings. Wastes also include those associated with the application of antifouling agents to the underwater portions of components to control interference by marine organisms. Major repairs of electrical components could result in waste dielectric fluids (mineral oil).

4.12 Impacts Common to All Alternatives

4.12.1 Environmental Consequences of Fuel Cycles

4.12.1.1 Uranium Fuel Cycle

This section addresses the environmental impacts associated with the uranium fuel cycle as they apply to license renewal. In the United States, all currently operating commercial plants are light water reactors and use uranium for fuel. Therefore, in this section and in the rest of this GEIS, the term “uranium fuel cycle” is used interchangeably with “nuclear fuel cycle.”

Uranium Fuel Cycle Facilities

The NRC evaluated the environmental impacts that would be associated with operating uranium fuel cycle facilities other than the reactors themselves in two NRC documents: WASH-1248 (NRC 1974) and NUREG-0116 (NRC 1976). The types of facilities considered in these two documents include:

- Uranium mining – facilities where the uranium ore is mined.
- Uranium milling – facilities where the uranium ore is refined to produce uranium concentrates in the form of triuranium octaoxide (U_3O_8).

- Uranium hexafluoride (UF_6) production – facilities where the uranium concentrates are converted to UF_6.

- Isotopic enrichment – facilities where the isotopic ratio of the uranium-235 isotope in natural uranium is increased to meet the requirements of light water reactors.

- Fuel fabrication – facilities where the enriched UF_6 is converted to uranium dioxide (UO_2) and made into sintered UO_2 pellets. The pellets are subsequently encapsulated in fuel rods, and the rods are assembled into fuel assemblies ready to be inserted into the reactors. Two options were considered: (1) carrying out all steps involved in manufacturing the fuel assemblies at the same location and (2) carrying the steps out at two separate facilities (at one facility, UO_2 is produced in powder form from the enriched UF_6, and at the other facility, the fuel assemblies are manufactured).

- Reprocessing – facilities that disassemble the spent fuel assemblies, chop up the fuel rods into small sections, chemically dissolve the spent fuel out of sectioned fuel rod pieces, and chemically separate the spent fuel into reusable uranium, plutonium, and other radionuclides (primarily fission products and actinides).

- Disposal – facilities where the radioactive wastes generated at all fuel cycle facilities including the reactors, are buried. Spent nuclear fuel that is removed from the reactors and not reprocessed was also assumed to be disposed of at a geologic repository.

In addition to impacts occurring at the above facilities, the impacts associated with the transportation of radioactive materials among these facilities, including the transportation of wastes to disposal facilities, were evaluated. The results were summarized in a table and promulgated as Table S–3 in 10 CFR 51.51(b). Table S–3 is provided for ease of reference. 10 CFR 51.51(a) states:

> Every environmental report prepared for the construction permit stage of a light-water-cooled nuclear power reactor, and submitted on or after September 4, 1979, shall take Table S–3, Table of Uranium Fuel Cycle Environmental Data, as the basis for evaluating the contribution of the environmental effects of uranium mining and milling, the production of uranium hexafluoride, isotopic enrichment, fuel fabrication, reprocessing of irradiated fuel, transportation of radioactive materials and management of low level wastes and high level wastes related to uranium fuel cycle activities to the environmental costs of licensing the nuclear power reactor. Table S–3 shall be included in the environmental report and may be supplemented by a discussion of the environmental significance of the data set forth in the table as weighed in the analysis for the proposed facility.

Consideration of Environmental Justice

As stated in NRC's *Policy Statement on the Treatment of Environmental Justice Matters in NRC Regulatory and Licensing Actions* (69 FR 52040), "An NRC EJ [environmental justice] analysis should be limited to the impacts associated with the proposed action (*i.e.*, the communities in the vicinity of the proposed action). EJ-related issues differ from site to site and normally cannot be resolved generically. Consequently, EJ, as well as other socioeconomic issues, are normally considered in site-specific EISs. Thus, due to the site-specific nature of an EJ analysis, EJ-related issues are usually not considered during the preparation of a generic or programmatic EIS. EJ assessments would be performed as necessary in the underlying licensing action for each particular facility." (See 69 FR 52046).

The environmental impacts of various individual operating uranium fuel cycle facilities are addressed in separate EISs prepared by NRC. These documents include analyses that address human health and environmental impacts to minority and low-income populations. Electronic copies of these EISs are available through the NRC's public Web site under Publications Prepared by NRC Staff document collection of the NRC's Electronic Reading Room at http://www.nrc.gov/reading-rm/doc-collections/; and the NRC's Agency wide Documents Access and Management System (ADAMS) at http://www.nrc.gov/reading-rm/adams.html.

Specific categories of natural resource use included in Table S–3 relate to land use; water consumption and thermal effluents; radioactive releases; burial of transuranic waste, HLW, and LLW; and radiation doses from transportation and occupational exposures. The contributions in the table for reprocessing, waste management, and transportation of wastes are maximized for either of the two fuel cycles (uranium only and no recycle); that is, the cycle that results in the greater impact is used. For each resource area, Table S–3 presents a result that has been integrated over the entire fuel cycle except the reactors. The only exception to this is that the waste quantities provided under the entry called "solids (buried on site)" also includes wastes generated at the reactor. The environmental impact values are expressed in terms normalized to show the potential impacts attributable to processing the fuel required for the operation of a 1000-MW(e) nuclear power plant for one year at an 80 percent availability factor to produce about 800 MW-yr (0.8 GW-yr) of electricity. This is referred to as 1 reference reactor year.

Table S–3. Table Taken from 10 CFR 51.51 on Uranium Fuel Cycle Environmental Data
(Normalized to model light water reactor annual fuel requirement [WASH-1248] or reference reactor year [NUREG-0116])[(a)]

Environmental Considerations	Total	Maximum Effect per Annual Fuel Requirement or Reference Reactor Year of Model 1,000 MWe Light Water Reactor
Natural Resource Use		
Land (acres)		
Temporarily committed[(b)]	100	
Undisturbed area	79	
Disturbed area	22	Equivalent to a 110 MWe coal-fired power plant.
Permanently committed	13	
Overburden moved (millions of MT)	2.8	Equivalent to 95 MWe coal-fired power plant.
Water (millions of gallons)		
Discharged to air	160	Equal to 2 percent of model 1,000 MWe light water reactor with cooling tower.
Discharged to water bodies	11,090	
Discharged to ground	127	
Total	11,377	Less than 4 percent of model 1,000 MWe light water reactor with once-through cooling.
Fossil Fuel		
Electrical energy (thousands of MW-hour)	323	Less than 5 percent of model 1,000 MWe output.
Equivalent coal (thousands of MT)	118	Equivalent to the consumption of a 45 MWe coal-fired power plant.
Natural gas (millions of scf)	135	Less than 0.4 percent of model 1,000 MWe energy output.
Effluents-Chemical (MT)		
Gases (including entrainment)[(c)]		
SO_x	4,400	
NO_x[(d)]	1190	Equivalent to emissions from 45 MWe coal-fired plant for a year.
Hydrocarbons	14	
CO	29.6	
Particulates	1154	
Other gases		
F	0.67	Principally from UF_6 production, enrichment, and reprocessing. Concentration within range of State standards and below level that has effects on human health.
HCl	0.014	

Table S–3. (cont.)

Environmental Considerations	Total	Maximum Effect per Annual Fuel Requirement or Reference Reactor Year of Model 1,000 MWe Light Water Reactor
Liquids		
SO^{-}_{4}	9.9	From enrichment, fuel fabrication, and reprocessing steps. Components that constitute a potential for adverse environmental effects are present in dilute concentrations and receive additional dilution by receiving bodies of water to levels below permissible standards. The constituents that require dilution and the flow of dilution water are NH_3: 600 cfs, NO_3: 20 cfs, fluoride: 70 cfs.
NO^{-}_{3}	25.8	
Fluoride	12.9	
Ca^{++}	5.4	
$C1^{-}$	8.5	
Na^{+}	12.1	
NH_3	10.0	
Fe	0.4	
Tailings solutions (thousands of MT)	240	From mills only – no significant effluents to environment.
Solids	91,000	Principally from mills – no significant effluents to environment.
Effluents – Radiological (curies)		
Gases (including entrainment)		
Rn-222	–	Presently under reconsideration by the Commission.
Ra-226	0.02	
Th-230	0.02	
Uranium	0.034	
Tritium (thousands)	18.1	
C-14	24	
Kr-85 (thousands)	400	
Ru-106	0.14	Principally from fuel reprocessing plants.
I-129	1.3	
I-131	0.83	
Tc-99	–	Presently under consideration by the Commission.
Fission products and transuranics	0.203	
Liquids		
Uranium and Progeny	2.1	Principally from milling – included tailings liquor and returned to ground – no effluents; therefore, no effect on the environment.
Ra-226	0.0034	From UF_6 production.
Th-230	0.0015	
Th-234	0.01	From fuel fabrication plants – concentration 10 percent of 10 CFR 20 for total processing 26 annual fuel requirements for model light water reactor.
Fission and activation products	5.9×10^{-6}	

Table S–3. (cont.)

Environmental Considerations	Total	Maximum Effect per Annual Fuel Requirement or Reference Reactor Year of Model 1,000 MWe Light Water Reactor
Solids (buried on site)		
Other than high level (shallow)	11,300	9,100 Ci comes from low-level reactor wastes and 1,500 Ci comes from reactor decontamination and decommissioning – buried at land burial facilities. 600 Ci comes from mills – included in tailing returned to ground. Approximately 60 Ci comes from conversion and spent fuel storage. No significant effluent to the environment.
Transuranic and high level waste (deep)	1.1×10^7	Buried at Federal Repository.
Effluents – thermal (billions of Btu)	4,063	Less than 5 percent of model 1000 MWe light water reactor.
Transportation (person-rem)		
Exposure of workers and general public	2.5	
Occupational exposure	22.6	From reprocessing and waste management.

(a) In some cases where no entry appears, it is clear from the background documents that the matter was addressed and that, in effect, the table should be read as if a specific zero entry had been made. However, there are other areas that are not addressed in the table. Table S–3 does not include health effects from the effluents described in the table, estimates of releases of radon-222 from the uranium fuel cycle, or estimates of technetium-99 released from waste management or reprocessing activities. These issues may be the subject of litigation in the individual licensing proceedings.
Data supporting this table are given in the *Environmental Survey of the Uranium Fuel Cycle*, WASH–1248, April 1974; the *Environmental Survey of the Reprocessing and Waste Management Portion of the LWR Fuel Cycle*,' NUREG-0116 (Supp. 1 to WASH–1248); the *Public Comments and Task Force Responses Regarding the Environmental Survey of the Reprocessing and Waste Management Portions of the LWR Fuel Cycle*, NUREG–0216 (Supp. 2 to WASH–1248); and in the record of the final rulemaking pertaining to *Uranium Fuel Cycle Impacts from Spent Fuel Reprocessing and Radioactive Waste Management*, Docket RM-50-3. The contributions from reprocessing, waste management, and transportation of wastes are maximized for either of the two fuel cycles (uranium only and no recycle). The contribution from transportation excludes transportation of cold fuel to a reactor and of irradiated fuel and radioactive wastes from a reactor, which are considered in Table S-4 of Sec. 51.20(g). The contributions from the other steps of the fuel cycle are given in columns A–E of Table S–3A of WASH–1248.
(b) The contributions to temporarily committed land from reprocessing are not prorated over 30 years, since the complete temporary impact accrues regardless of whether the plant services one reactor for one year or 57 reactors for 30 years.
(c) Estimated effluents based upon combustion of equivalent coal for power generation.
(d) 1.2 percent from natural gas use and process.
Source: 10 CFR 51.51

A detailed discussion of impacts associated with the production and processing of fuel needed for one reference reactor year operation of the model light water reactor was provided in the 1996 GEIS (NRC 1996). Included in the discussion were the collective offsite radiological impacts that would be associated with radon-222 and technetium-99 releases to the environment during the fuel cycle operations, which Table S–3 does not address. The 1996 GEIS also provided a discussion on the sensitivity of the impacts to recent changes in the fuel cycle (Section 6.2.3 in the 1996 GEIS). For example, when Table S–3 was originally prepared, the model reactor was assumed to be refueled once a year, and the fuel was assumed to remain in the reactor to a burnup level of 33,000 MWd/MTU. The 1996 GEIS discussed the

effects of higher fuel burnups up to 62,000 MWd/MTU and the fact that most reactors now refuel once every 18 months or 24 months. The technological changes in the various fuel cycle operations (e.g., the in situ mining of uranium rather than the open pit mining assumed in WASH–1248, and the potential for using more efficient isotopic enrichment processes through the gaseous centrifuge rather than the energy-intensive gaseous diffusion process that was and is still being used in the United States) were also discussed. It was concluded that even though certain fuel cycle operations and fuel management practices have changed over the years, the assumptions and methodology used in preparing Table S–3 were conservative enough that the impacts described by the use of Table S–3 would still be bounding. The NRC believes that this conclusion still holds.

One part of the fuel cycle that was not discussed either in the technical support documents for the original Table S–3 or in the 1996 GEIS was the disposition of the depleted UF_6 tails generated during the enrichment process. Originally, these tails were intended to be used as a feedstock to make fuel for proposed fast breeder reactors. However, the United States abandoned the fast breeder reactor program in 1978. Before the creation of the United States Enrichment Corporation in 1993, DOE was the custodian of all the depleted UF_6 generated in the United States at the three gaseous diffusion plants (in Oak Ridge, Tennessee; Portsmouth, Ohio; and Paducah, Kentucky). DOE prepared several NEPA documents evaluating the impacts associated with the disposition of approximately 700,000 MT (1.54 billion lb) of depleted UF_6 (DOE 1999, 2004a,b, 2007a). DOE decided to convert the depleted UF_6 back to U_3O_8 and dispose of it as LLW (DOE 2004c,d). The results of these analyses indicate that the operational impacts of the depleted UF_6 management facilities would not be very different from the impacts estimated for other parts of the fuel cycle in Table S–3. In particular, the impacts of the depleted UF_6 conversion facilities, where the depleted UF_6 is converted to U_3O_8, would be similar to the impacts of the UF_6 production facilities, where U_3O_8 is converted to UF_6. If the depleted uranium oxide is disposed of as LLW, the conversion product corresponding to one reference reactor year would be in addition to the LLW quantities already listed in Table S–3. This value is estimated to be approximately 12 Ci (4.4×10^{11} Bq) (35 MT of uranium per RRY multiplied by 0.34 Ci/MT of depleted uranium).

Transportation

The impacts associated with transporting fresh fuel to one 1000 MW(e) model light water reactor and with transporting spent fuel and radioactive waste (LLW and mixed waste) from that light water reactor are provided in Table S–4 in 10 CFR 51.52. Similar to Table S–3, and as indicated in 10 CFR 51.52, every environmental report prepared for the construction permit stage of a commercial nuclear power plant must contain a statement concerning the transport of fuel and radioactive waste to and from the reactor. A similar statement is also required in license renewal applications. Table S–4 forms the basis of such a statement.

Table S–4. Table Taken from 10 CFR 51.52 on the Environmental Impact of Transporting Fuel and Waste to and from One Light-Water-Cooled Nuclear Power Reactor[(a)]

Normal Conditions of Transport			
		Environmental Impact	
Heat (per irradiated fuel cask in transit)		250,000 Btu/hr	
Weight (governed by Federal or State restrictions)		73,000 lb per truck; 100 tons per cask per rail car	
Traffic density:			
Truck		Less than 1 per day	
Rail		Less than 3 per month	
Exposed Population	**Estimated No. of Persons Exposed**	**Range of Doses to Exposed Individuals[(b)] (per reactor year)**	**Cumulative Dose to Exposed Population (per reactor year)[(c)]**
Transportation workers	200	0.01 to 300 millirem	4 person-rem
General public:			
Onlookers	1100	0.003 to 1.3 millirem	3 person-rem
Along route	600,000	0.0001 to 0.06 millirem	
Accidents in Transport			
		Environmental Risk	
Radiological effects		Small[(d)]	
Common (nonradiological) causes		1 fatal injury in 100 reactor years; 1 nonfatal injury in 10 reactor years; $475 property damage per reactor year	

(a) Data supporting this table are given in the Commission's *Environmental Survey of Transportation of Radioactive Materials to and from Nuclear Power Plants*, WASH–1238, December 1972, and Supp. 1, NUREG–75/038, April 1975.
(b) The Federal Radiation Council has recommended that the radiation doses from all sources of radiation other than natural background and medical exposures should be limited to 5000 millirem per year for individuals as a result of occupational exposure and should be limited to 500 millirem per year for individuals in the general population. The dose to individuals due to average natural background radiation is about 130 millirem per year.
(c) Man-rem is an expression for the summation of whole body doses to individuals in a group. Thus, if each member of a population group of 1,000 people received a dose of 0.001 rem (1 millirem), or if 2 people received a dose of 0.5 rem (500 millirem) each, the total man-rem dose in each case would be 1 man-rem.
(d) Although the environmental risk of radiological effects stemming from transportation accidents is currently incapable of being numerically quantified, the risk remains small, regardless of whether it is being applied to a single reactor or a multireactor site.
Source: 10 CFR 51.52

A discussion of the values included in Table S–4 and how they may change during the license renewal term was included in Section 6.3 of the 1996 GEIS. However, after the 1996 GEIS was issued and during the rulemaking process for codifying Table B–1 in 10 CFR Part 51, a number of comments were received from the public that raised some questions about the adequacy of Table S–4 for license renewal application reviews. As a result, the NRC reevaluated the transportation issues and the adequacy of Table S–4 for license renewal application reviews. In 1999, the NRC issued an addendum to the 1996 GEIS (NRC 1999a) in which the agency evaluated the applicability of Table S–4 to future license renewal proceedings, given that the spent fuel is likely to be shipped to a single repository (as opposed to several destinations, as originally assumed in the preparation of Table S–4) and given that shipments of spent fuel are likely to involve more highly enriched fresh fuel (more than 4 percent as assumed in Table S–4) and higher-burnup spent fuel (longer than 33,000 MWd/MTU as assumed in Table S–4). In the addendum, the NRC evaluated the impacts of transporting the spent fuel from reactor sites to the candidate repository at Yucca Mountain and the impacts of shipping more highly enriched fresh fuel and higher-burnup spent fuel. On the basis of the evaluations, the NRC concluded that the values given in Table S–4 would still be bounding, as long as the (1) enrichment of the fresh fuel was 5 percent or less, (2) burnup of the spent fuel was 62,000 MWd/MTU or less, and (3) higher-burnup spent fuel (higher than 33,000 MWd/MTU) was cooled for at least 5 years before being shipped offsite. The conditions evaluated in Addendum 1 have not changed, and no new conditions have been introduced that would alter the conclusions in Addendum 1 (NRC 1999a). A later study found that the impacts presented in Table S–4 would bound the potential environmental impacts that would be associated with transportation of spent nuclear fuel with up to 75,000 MWd/MTU burnup, provided that the fuel is cooled for at least 5 years before shipment (Ramsdell et al. 2001). Table S–4 as currently encoded in 10 CFR 51.52 is provided.

Consideration of Environmental Justice

The human health impacts of transporting spent nuclear fuel are addressed in an addendum to the 1996 GEIS (NRC 1999a) in which the agency evaluated the applicability of Table S–4 to future license renewal proceedings given that the spent fuel is likely to be shipped to a single repository. As part of the site characterization and recommendation process for the proposed geologic repository at Yucca Mountain, Nevada, the DOE is required by the Nuclear Waste Policy Act of 1982 to prepare an EIS. By law, the NRC is required to adopt DOE's EIS, to "the extent practicable," as part of any possible NRC construction authorization decision. As a result, DOE prepared and submitted to NRC the *Supplemental Environmental Impact Statement for a Geologic Repository for the Disposal of Spent Nuclear Fuel and High-Level Radioactive Waste at Yucca Mountain, Nye County, Nevada* (Repository SEIS) DOE/EIS-0250F-S1) (DOE 2008). This document includes analyses that address human health and environmental impacts to minority and low-income populations.

As noted in DOE's Repository SEIS, shipments of spent nuclear fuel (as well as fresh fuel) would use the nation's existing railroads and highways. DOE estimates that transportation-related impacts to land use; air quality; hydrology; biological resources and soils; cultural resources; socioeconomics; noise and vibration; aesthetics; utilities, energy, and materials; and waste management would be small. The small effect on the population as a whole would be likely for any segment of the population, including minority and low-income populations, as well as members of American Indian tribes.

DOE did not identify any potentially high and adverse impacts to members of the public from the transport of spent nuclear fuel. DOE determined that subsections of the population, including minority or low-income populations, would not receive disproportionate impacts, and no unique exposure pathways, sensitivities, or cultural practices that would expose minority or low-income populations to disproportionately high and adverse impacts were identified. DOE concluded that no disproportionately high and adverse impacts would result from the national transportation of spent nuclear fuel to Yucca Mountain (DOE 2008). On September 8, 2008, NRC staff recommended that the Commission adopt, with supplementation, DOE's Repository EIS and supplements (73 *FR* 53284).

Impact Issues

Nuclear fuel is needed for the operation of light water reactors during the license renewal term in the same way that it is needed during the current license period. Therefore, the factors that affect the data presented in Tables S–3 and S–4 do not change whether a light water reactor is operating under its original license or a renewed license. In the 1996 GEIS, there are nine issues that relate to uranium fuel cycle and waste management. Five of these issues that relate to waste management are addressed in Section 4.11.

The remaining four impact issues, which are discussed here, are:

- Offsite radiological impacts (individual effects from other than the disposal of spent fuel and HLW),
- Offsite radiological impacts (collective effects from other than the disposal of spent fuel and HLW),
- Nonradiological impacts of the uranium fuel cycle, and
- Transportation impacts.

Individual Offsite Radiological Impacts (*individual effects from sources other than the disposal of spent fuel and HLW*)

This issue addresses the radiological impacts on individuals who live near uranium fuel cycle facilities. The primary indicators of impact are the concentrations of radionuclides in the effluents from the fuel cycle facilities and the radiological doses received by a maximally exposed individual (MEI) on the site boundary or at some location away from the site boundary. As discussed in Section 3.9.1, an MEI can be exposed to radiation from radionuclides found in the effluents of nuclear fuel cycle facilities and from radiation "shine" from buildings, storage facilities, and storage tanks containing radioactive material. The basis for establishing the significance of individual effects is the comparison of the releases in the effluents and the MEI doses with the permissible levels in applicable regulations. The analyses performed by the NRC in the preparation of Table S-3 and found in the 1996 GEIS indicate that as long as the facilities operate under a valid license issued by either the NRC or an agreement State, the individual effects meet the applicable regulations. On the basis of these considerations, the NRC has concluded that the impacts on individuals from radioactive gaseous and liquid releases during the license renewal term would remain at or below the NRC's regulatory limits. Accordingly, the NRC concludes that offsite radiological impacts of the uranium fuel cycle (individual effects from sources other than the disposal of spent fuel and high-level waste) are small. The efforts to keep the releases and doses as low as is reasonably achievable (ALARA) will continue to apply to fuel-cycle-related activities. This was considered a Category 1 issue in the 1996 GEIS. No new information has been identified that would alter this conclusion.

Collective Offsite Radiological Impacts (collective effects from sources other than the disposal of spent nuclear fuel and HLW)

The focus of this issue is the collective radiological doses to and health effects on the general public resulting from uranium fuel cycle facilities over the license renewal term. The radiological doses received by the general public are calculated on the basis of releases from the facilities to the environment, as provided in Table S–3. These estimates were provided in the 1996 GEIS for the gaseous and liquid releases listed in Table S–3 as well as for radon-222 and technetium-99 releases, which are not listed in Table S–3. The population dose commitments were normalized for each year of operation of the model 1000-MW(e) LWR (RRY).

On the basis of the analyses provided in the 1996 GEIS, the estimated involuntary 100-year dose commitment to the U.S. population resulting from the radioactive gaseous releases from uranium fuel cycle facilities (excluding the reactors and releases of Rn-222 and Tc-99) was estimated to be 400 person-rem (4 person-Sv) for 1 RRY. Similarly, the environmental dose commitment to the U.S. population from the liquid releases was estimated to be 200 person-rem (3 person-Sv) per RRY. As a result, the total estimated involuntary 100-year dose commitment to the U.S. population from radioactive gaseous and liquid releases listed in

Table S-3 was given as 600 person-rem (6 person-Sv) per RRY (see Section 6.2.2 of NRC 1996).

The 1996 GEIS also provided a detailed analysis of potential doses to the U.S. population from Rn-222 releases, which primarily occur during mining and milling operations and as emissions from mill tailings, and Tc-99 releases, which primarily occur during the enrichment process (Section 6.2.2 of NRC 1996). The U.S. population doses resulting from the Rn-222 releases and Tc-99 releases for 1 RRY are summarized in Table 4.12.1.1–1. The total population dose from all releases to the environment, including the Rn-222 and Tc-99 releases, is given as 938.6 person-rem (9.386 person-Sv) per RRY. Because of an oversight in the 1996 GEIS, the sum of population doses was given as 740 person-rem, and the total dose over the 20-year

Table 4.12.1.1–1. Population Doses from Uranium Fuel Cycle Facilities Normalized to One Reference Reactor Year

Source	Collective Dose (person-rem)[(a)]
Gaseous releases	400
Liquid releases	200
Rn-222 releases from uranium mining and milling	140
Rn-222 releases from unreclaimed open-pit mines	96
Rn-222 releases from stabilized tailings piles	2.6
Tc-99 releases from enrichment plants	100
Total	938.6

(a) To convert person-rem to person-Sv, multiply by 0.01.
Source: modified from NRC 1996

renewal period was listed as 14,800 person-rem (148 person-Sv) (740 person-rem per RRY multiplied by 20 years). The correct values would be approximately 940 person-rem per RRY and 18,800 person-rem (188 person-Sv) for 20 years.

As discussed in the 1996 GEIS, the dose estimates given above were based on highly conservative assumptions (i.e., the doses are overestimated). In actuality, the doses received by most members of the public would be so small that they would be indistinguishable from the variations in natural background radiation. The 1996 GEIS further estimated the health effects on the general public in terms of cancer fatalities by multiplying the calculated doses by risk conversion factors obtained from the literature. The estimated health effect was stated as 0.6 cancer fatality per RRY, or 12 cancer fatalities for each additional 20-year LWR operating term. The 1996 GEIS also stated that these estimates were highly uncertain and that much of

the calculated doses, especially the contribution of radon releases from mines and tailing piles, consisted of tiny doses summed over large populations. It was stated that this practice may result in health effect estimates that may not be meaningful.

There are no regulatory limits applicable to collective doses to the general public from fuel cycle facilities. All regulatory limits are based on individual doses. All fuel cycle facilities are designed and operated to meet the applicable regulatory limits.

As discussed in the 1996 GEIS, despite the lack of definitive data, some judgment as to the regulatory NEPA implications of these matters should be made and it makes no sense to repeat the same judgment in every case. The Commission concludes that these impacts are acceptable in that these impacts would not be sufficiently large to require the NEPA conclusion, for any plant, that the option of extended operation under 10 CFR Part 54 should be eliminated. Accordingly, while the Commission has not assigned a single level of significance for the collective effects of the fuel cycle, this issue is considered Category 1.

Nonradiological Impacts of the Uranium Fuel Cycle

This section addresses the nonradiological impacts associated with the uranium fuel cycle facilities as they relate to license renewal. Data on the nonradiological impacts of the fuel cycle are provided in Table S–3. These data cover land use, water use, fossil fuel use, and chemical effluents. The significance of the environmental impacts associated with these data was evaluated in the 1996 GEIS on the basis of several relative comparisons. The land requirements were compared to those for a coal-fired power plant that could be built to replace the nuclear capacity if the operating license is not renewed. Water requirements for the uranium fuel cycle were compared to the annual requirements for a nuclear power plant. The amount of fossil fuel (coal and natural gas) consumed to produce electrical energy and process heat during the various phases of the uranium fuel cycle was compared to the amount of fossil fuel that would have been used if the electrical output from the nuclear plant were supplied by a coal-fired plant. Similarly, the gaseous effluents sulfur dioxide (SO_2), nitrogen oxide (NO), hydrocarbons, CO, and PM released as a consequence of the coal-fired electrical energy used in the uranium fuel cycle were compared with equivalent quantities of the same effluents that would be released from a 45-MW(e) coal-fired plant. It was noted that the impacts associated with uses of all of the above resources would be small. Any impacts associated with nonradiological liquid releases from the fuel cycle facilities would also be small. As a result, the aggregate nonradiological impact of the uranium fuel cycle resulting from the renewal of an operating license for a plant would be small, and it was considered a Category 1 issue in the 1996 GEIS. No new information has been identified that would alter this conclusion.

Transportation Impacts

This section addresses the impacts associated with transportation of fuel and waste to and from one light water reactor during the license renewal term. Table S–4 in 10 CFR 51.52 forms the basis for analysis of these impacts in evaluating the applications for license renewal from owners of light water reactors. As discussed previously in this section, the applicability of Table S–4 for license renewal applications was extensively studied in the 1996 GEIS (NRC 1996) and its Addendum 1 (NRC 1999a). The impacts were found to be small, and the findings were stated as follows:

> The impacts of transporting spent fuel enriched up to 5 percent uranium-235 with average burnup for the peak rod to current levels approved by NRC up to 62,000 MWd/MTU and the cumulative impacts of transporting high-level waste to a single repository, such as Yucca Mountain, Nevada are found to be consistent with the impact values contained in 10 CFR 51.52(c), Summary Table S–4 – Environmental Impact of Transportation of Fuel and Waste to and from One Light-Water-Cooled Nuclear Power Reactor. If fuel enrichment or burnup conditions are not met, the applicant must submit an assessment of the implications for the environmental impact values reported in §51.52.

The issue was assigned to Category 1. No new information has been identified that would alter this conclusion.

4.12.1.2 Energy Alternative Fuel Cycles

Fossil Energy Alternatives

The environmental consequences of the fuel cycle for a fossil-fuel-fired plant result from the initial extraction of the fuel from its natural setting, fuel cleaning and processing, transport of the fuel to the facility, and management and ultimate disposal of solid wastes resulting from combustion of the fuel.

The environmental impacts of coal mining vary with the location and type of mining technology employed, but generally includes:

- Significant change in land uses, especially when surface mining is employed.
- Degradation of visual resource values.
- Air quality impacts, including release of criteria pollutants from vehicles and equipment, release of fugitive dust from ground disturbance and vehicle travel on unpaved surfaces,

release of VOCs from the storage and dispensing of vehicle and equipment fuels and the use of solvents and coatings in maintenance activities, and release of coalbed methane into the atmosphere as coal seams are exposed and overburden removed.

- Noise impacts from the operation of vehicles and equipment and the possible use of explosives.

- Impacts on geology and soils due to land clearing, excavations, soil and overburden stockpiling (for strip mining operations), and mining.

- Hydrological impacts, including degradation of surface water quality due to increased sediment and runoff to surface water bodies, possible degradation of groundwater resources due to consumptive use and potential contamination (especially when shaft mining techniques are employed), as well as generation of wastewater from coal cleaning operations and other supporting industrial activities.

- Ecological impacts, including extensive loss of natural habitat, loss of native vegetative cover, disturbance of wildlife, possible introduction of invasive species, changes to surface hydrology, and degradation of aquatic systems.

- Impacts on historic and cultural resources within the mine footprint, as well as additional potential impacts resulting from auxiliary facilities and appurtenances (e.g., access roads, rail spurs).

- Direct socioeconomic impacts from employment of the workforce and indirect impacts from increased employment in service and support industries.

- Potential environmental justice impacts as a result of the presence of low-income or minority populations in the surrounding communities and/or within the workforce.

- Potential health impacts on workers from exposure to airborne dust, gases such as methane, and exhaust from internal combustion engines on vehicles and mining machinery.

- Generation of coal wastes and industrial wastes associated with the maintenance of vehicles and equipment; increased potential for spills of fuels from onsite fuel storage and dispensing.

New Nuclear Alternatives

Environmental impacts of the fuel cycle result from the initial extraction of the fuel from its natural setting, transport of the fuel to the facility, and management and ultimate disposal of solid wastes resulting from combustion of the fuel. For the fuel cycle associated with a nuclear power plant, these activities include uranium mining and milling, the production of uranium hexafluoride, isotopic enrichment, fuel fabrication, reprocessing of irradiated fuel, transportation of radioactive materials, and management of low-level wastes and high-level wastes (10 CFR 51). The NRC has summarized environmental data associated with the uranium fuel cycle in Table S-3 of 10 CFR 51.51. The analysis provides a basis for evaluating environmental effects of the fuel cycle for all nuclear power plants, regardless of site location. The information is based on a 1000-MW LWR with an 80 percent capacity factor. The impacts associated with the transportation of fuel and waste to and from a power reactor are summarized in Table S-4 of 10 CFR 51.52. Detailed analysis of the uranium fuel cycle is also considered in Section 4.12.1.1. Although it is specific to the impacts of license renewal, it is applicable to the new nuclear plant alternative because the advanced reactor designs use the same type of fuel as existing operational designs. One difference may be that the new reactor may have a power rating of greater than 1000 MW(e), in which case the impacts would be proportionally higher. However, all impacts associated with the uranium fuel cycle, as discussed in Section 4.12.1.1, would still be small.

Renewable Alternatives

The term “fuel cycle” has varying degrees of relevance for renewable energy facilities. Clearly, the term has meaning for renewable energy technologies that rely on combustion of fuels such as biomass grown or harvested for the express purpose of power production. The term is somewhat more difficult to define for renewable technologies such as wind, solar, geothermal, and ocean wave and current. Those natural energy resources exist regardless of any effort to harvest them for electricity production. The common technological strategy for harvesting energy from such natural resources is to convert the kinetic or thermal energy inherent in that resource to mechanical energy or torque. The torque is then applied directly (e.g., as in the case of a wind turbine) or indirectly (e.g., for those facilities that utilize conventional steam cycles to drive turbines that drive generators) to produce electricity. However, because those renewable technologies capture very small fractions of the total kinetic or thermal energy contained in those resources, impacts from the presence or absence of the renewable energy technology are often indistinguishable.

Environmental consequences of fuel cycles for biomass (e.g., energy crops, wood wastes, municipal solid waste, refuse-derived fuel, landfill gas) include the following:

- Land use impacts from the growing and harvesting of the energy crops.
- Reduced impacts on land from the avoidance of land disposal of anthropogenic biomass feedstocks such as municipal solid waste and refuse-derived fuel.
- Visual impacts from the establishment of farm fields and forest areas and processing facilities for the growing, harvesting, and preparation of biomass feedstocks.
- Air impacts from operation of vehicles and equipment used in the planting, cultivating, and harvesting of energy crops.
- Reductions in greenhouse gas emissions from landfills as a result of the capture and destruction by combustion of landfill gas for energy production.
- Removal of greenhouse gases from the air (e.g., CO_2) by growing crops.
- Noise impacts from the operation of agriculture and silviculture equipment and transport vehicles in otherwise rural settings with low ambient noise levels.
- Soil impacts from the cultivation of fields and the potential for increased sediment in precipitation runoff.
- Hydrologic impacts from irrigation of the energy crops; impacts on groundwater resources from water removal for agricultural or silvicultural purposes or industrial water uses associated with the preparation of biomass feedstocks.
- Ecological impacts from the loss of habitat resulting from crop production; loss of hydrologic resources due to diversion for irrigation purposes; potential intrusion of invasive species on disturbed land surfaces, and potential contamination of adjacent habitat by pesticide and fertilizer runoff.
- Ecological impacts from the alteration of habitat due to human presence and activities in agricultural and silvicultural areas.
- Historic and cultural resource impacts from inadvertent destruction of resources in virgin fields that have not undergone appropriate efforts to survey, identify, and relocate cultural resources that may be present.

- Human health impacts from the exposure of workers to pesticides and fertilizers used in growing biomass fuels; work around mechanical planting, cultivating, and harvesting equipment; work in weather extremes; and exposure to dangerous plants and wildlife.

- Waste impacts in the form of residual wastes from the application of pesticides and fertilizers and wastes associated with the routine maintenance of equipment and vehicles used in crop production and transport (used lubricating oils, hydraulic fluids, glycol-based coolants, and battery electrolytes from maintenance of equipment and vehicles with internal combustion engines).

- Positive economic impacts from the creation of jobs in the agriculture, silviculture, and transportation sectors.

4.12.2 Environmental Consequences of Terminating Nuclear Power Plant Operations and Decommissioning

4.12.2.1 Termination of Nuclear Power Plant Operations and Decommissioning of Existing Nuclear Power Plants

This section describes and discusses the environmental consequences of terminating nuclear power plant operations and decommissioning, but the only impacts attributable to the proposed action (license renewal) are the effects of an additional 20 years of operations on the impacts of decommissioning. The majority of the impacts associated with plant operations would cease with reactor shutdown; however, some impacts would remain unchanged, while others would continue at reduced or altered levels. Some new impacts might also result directly from terminating nuclear power plant operations. Ancillary systems that are dedicated solely to reactor operations would cease operations completely; however, impacts from their physical presence could continue if they were not removed coincident with reactor shutdown. For sites with more than one unit, the operation of any ancillary systems that supported the units that continued to operate would be reduced in proportion to the reduced demand on them but would not stop entirely. Impacts associated with the mere physical presence of dedicated systems that remained in place or shared ancillary systems that continued to operate would remain unchanged.

Terminating nuclear power plant operations would result in the cessation of actions necessary to maintain the reactor, as well as a significant reduction in the workforce. NRC presumes that terminating nuclear power plant operations would not immediately lead to the dismantlement of the reactor or other infrastructure, much of which would still be in use to support other units onsite that continued to operate. Even for sites with just one unit, some facilities would remain in operation to ensure that the site was maintained in safe shutdown condition. Electrical

generators might continue to operate as synchronous condensers to stabilize voltage on the bulk electricity grid to which the reactor was connected.

Land Use

The termination of nuclear power plant operations would cause a reduction in the workforce at a nuclear plant, and the value placed on the facility for tax purposes would likely depreciate. The impact on taxing authorities that receive revenue from the nuclear power plant would depend on the percentage of revenue that they derived from the plant. Depending on the future need to replace electrical generating capacity, a replacement power plant could change the tax base and impact offsite land use. However, existing substations are expected to remain and be maintained after the termination of reactor operations to support the power grid.

Temporary onsite land use changes during decommissioning are anticipated to be comparable to changes that occur during construction and operations and would not require additional land. The major activities that require land temporarily include the staging of equipment, accommodation of workers (e.g., parking, training, site security access, office space, changing facilities), and removal of large components. The locations of these areas would depend on the layout of the plant. Temporary changes in onsite land use would not change the fundamental use of the reactor site.

There would be no difference in offsite land use impacts whether decommissioning occurred at the end of its current 40-year operating license or following a 20-year license renewal term. In either case, the impact of license renewal after terminating plant operations and decommissioning on onsite and offsite land use would be small and generic at all nuclear plants.

Visual Resources

Terminating nuclear power plant operations would not change the visual appearance of the nuclear power plant. The most notable change, however, would be the elimination of the condensate plumes from cooling towers (under certain meteorological conditions). The appearance of the plant would change as structures are removed.

Decommissioning may involve the demolition and dismantlement of one or more of the main buildings or structures at a nuclear power plant. A case study conducted for the 1996 GEIS found a limited number of situations in which the presence of nuclear power plants fostered perceptions of adverse impacts on visual resources. License renewal would delay decommissioning and prolong the visual impact. As discussed in the decommissioning GEIS (NRC 2002a), the visual impact of the nuclear plant site may not improve following decommissioning because the site could remain in industrial use.

Transmission lines and ROWs are expected to continue operating and to cause little or no additional impacts beyond those that have already occurred. A 20-year delay caused by license renewal would have no visual impact from continued transmission line operation.

Visual resource impacts associated with terminating plant operations and decommissioning after a 20-year license renewal will not change as a consequence of the delay. The impact of license renewal on visual resources would be small at all nuclear plants.

Air Quality

After the termination of operations, air emissions from the nuclear power plant would continue, but at greatly reduced levels. Air quality impacts would range from very small and would approach undetectable levels. Natural or mechanical draft cooling tower drift would be greatly reduced or would be eliminated. Air emissions from ancillary facility operations (e.g., boilers, emergency diesel generators) would continue until decommissioning.

The NRC evaluated the following activities in the decommissioning GEIS (NRC 2002a) that could impact air quality:

- Worker transportation to and from the site;
- Demolition of buildings and structures, including new structures added during refurbishment;
- Shipment of materials and debris to offsite locations;
- Operation of concrete batch plants (e.g., ENTOMB decommissioning options);
- Dismantling of systems and removing of equipment; and
- Movement and open storage of material onsite.

These activities typically occur over a period of years, from the time the facility ceases operation until the decommissioning is complete. The magnitude and the timing of the potential impacts of each decommissioning activity would vary from plant to plant.

Building and major plant structure demolition and the operation of the batch plant during decommissioning would have the greatest impact on air quality. Fugitive dust would vary in the size of the particles released. Depending on meteorological conditions, larger particles would settle to the ground near the demolition site.

Demolition would generally be limited to a small number of short-duration events. Mitigation measures, such as synchronized scheduling and the application of water sprays or chemical dust suppressants, could minimize the amount of fugitive dust released from the site.

The decommissioning option to ENTOMB the plant would require large amounts of concrete and aggregate. Unloading dry cement at the concrete batch plant and loading mixers or trucks would generate large amounts of dust. Depending on meteorological conditions, large particles of dust would settle out of the air quickly and air quality impacts would be localized near the concrete batch plant. Dust control measures used at concrete batch plants include enclosed dumping and unloading areas and conveyors and filters and water sprays.

The NRC concluded that the impact of decommissioning on air quality would be small for all plants in the decommissioning GEIS (NRC 2002a). The impact on air quality after the license renewal term is not expected to be different from the impact that would have occurred without license renewal.

Noise

During decommissioning, noise would generally be far enough away from sensitive receptors outside the plant boundaries that the noise would be attenuated to nearly ambient levels and would be scarcely noticeable offsite (NRC 2002a). However, during the demolition of concrete, the noise levels offsite could be loud enough (60 to 65 dBA at the nearest receptor site) that activities might need to be curtailed during early morning and evening hours. It is highly unlikely, on the basis of past decommissioning experience, that the offsite noise level from a plant during decommissioning would be sufficient to cause hearing loss. However, in one case, noise from decommissioning of a spent fuel pool's cooling system was reported to be up to 107 dB near the source, but it dropped to 50 dB at distances less than 1.6 km (1 mi) away (NRC 2002a). Nearby residents complained about these noise levels; engineering changes were made to the fans that were causing the noise, and the issue was resolved. Noise abatement procedures could also be used during decommissioning in order to reduce noise.

The NRC concluded that the noise impact of decommissioning would be small for all plants in the decommissioning GEIS (NRC 2002a). The noise impact from terminating nuclear plant operations and decommissioning after the license renewal is not expected to be different from the impact that would have occurred without license renewal.

Geology and Soils

Termination of nuclear plant operations is not expected to impact geology and soils. Heavy construction equipment would be engaged in demolition activities during decommissioning.

These vehicles would primarily use paved surfaces, but would also cross open ground in some locations. This would create the possibility for soil erosion from areas formerly covered with lawns or natural grasses. The demolition and removal of buildings, foundation slabs, parking lots, and roads, would expose more soil to possible erosion.

High slopes and surface runoff increase erosion potential. The soil distribution across a site may include some soils that are more susceptible to water or wind erosion. The loss of soil increases the turbidity in surface water draining off the site.

Erosion problems could be mitigated by using best management practices during decommissioning. These include, but are not limited to, minimizing the amount of disturbed land; stockpiling topsoil before construction or regrading; replacing the topsoil and adding seed and mulch in disturbed areas as soon as possible after disturbance; using silt fences to reduce sediment loading to surface water; using check dams to minimize the erosive power of drainages or creeks; and installing proper culvert outlets to minimize erosion in creeks.

Site geologic resources would not be affected by decommissioning. Geologic resources in the form of gravel or crushed stone might be needed to construct temporary roads that would be used by the heavy equipment involved in demolition.

The impact from terminating plant operations and decommissioning on geology and soils after a license renewal is not expected to be significantly different from the impacts that would have occurred without license renewal.

Hydrology – Surface Water and Groundwater

After the termination of plant operations, water use would be dramatically reduced; however, water demands would continue for the service water system to support such activities as temperature control of the spent fuel pool and other miscellaneous industrial maintenance applications. Surface water or groundwater intake and consumptive use would be very low compared with use during the operational phase. Discharge of liquid wastes and biocides would also be proportionately reduced.

Because the site workforce would be reduced, the volume of sanitary sewage effluent would be less than it had been during the operational period. Pumping rates for groundwater used for the potable water system after the termination of plant operations would also decrease because of the reduced workforce.

Impacts to site hydrology from soil erosion and storm events are expected to be unchanged from the operational period. Such erosion would be mitigated as part of general site maintenance during any phase in the power plant's life cycle.

The possibility of groundwater becoming contaminated through chemical spills or radionuclide release would be smaller after operations cease.

Dewatering, if needed to maintain the stability of structure foundations, is expected to continue as it did during the operational phase.

During decommissioning, the activities that have the potential to affect water use include:

- Maintenance of the spent fuel pool,
- Staffing changes (generally the staff size is decreased),
- Cooling of cutting equipment during removal of the reactor vessel and internals,
- High-pressure sprays of water on surfaces during decontamination,
- Dust suppression during destruction of structures, and
- The making of concrete for facility entombment.

The activities identified in the decommissioning GEIS (NRC 2002a) that have the potential to affect water quality include:

- Maintenance of the spent fuel pool,
- Draining and flushing of the cooling systems and processing of the liquid,
- High-pressure sprays of water on surfaces during decontamination, and
- Management of water used in dust suppression during destruction of structures.

At individual sites, the source of water for each of these uses may be surface water or groundwater. The decision on which source of water to use may ultimately be based on a combination of availability, infrastructure, permitting, and water quality and chemistry.

Some of the activities listed above could affect surface water quality. These include the use of high-pressure sprays of water during decontamination, dust suppression, and equipment cooling, and the discharge of various process waters. For decontamination, best management practices would need to be followed to manage the sprayed water. Both the decontamination

water and the process waters would need to be discharged in accordance with NPDES permit requirements.

The early stages of decommissioning and dismantling may involve a temporary, slight increase in the size of the overall site staff (NRC 2002a). The amount of sanitary system discharge would therefore increase slightly. Depending on when any onsite wastewater treatment plant, onsite septic system, or municipal sewage system connection would stop operating, temporary portable toilet facilities might be used for the decommissioning workforce. The number and capacity of such facilities would depend on the size of the workforce, which could vary during different phases of the decommissioning process.

In the decommissioning GEIS (NRC 2002a), evaluations focused on water use and water quality. The following activities were identified as having the potential to affect surface water.

- Cooling water systems,
- Discharge from dewatering systems, and
- Stormwater management and erosion control.

Surface water would remain the largest source of water used during decommissioning; it would be used to cool the spent fuel. However, this usage, as well as makeup water requirements, would be significantly smaller than during reactor cooling at an operating power plant. Demand for spent fuel cooling water would decrease over time as the fuel aged. Other activities listed above would also require amounts of water that would be low compared to cooling and makeup water requirements.

Dewatering systems would continue to discharge to surface water. The effect on surface water quality would be unchanged from the effect during the operational phase.

Stormwater management and erosion control would continue to be maintained during decommissioning to reduce the potential for effects on surface water quality, especially turbidity. Soil erosion can be minimized through best management practices, as discussed in Section 4.4.1. Chemical spills during decommissioning also have the potential to affect surface water quality. However, best management practices for handling fuels and other chemicals used in the operational phase should continue to be in place.

The natural variability in the climate, especially precipitation, has the potential to influence the availability of surface water. However, because it seems that there have not been any surface water availability problems at operating power plants with relatively higher water requirements for reactor cooling, severe drought is not expected to affect decommissioning.

In the decommissioning GEIS (NRC 2002a), the NRC concluded that the impacts on water use and water quality from decommissioning would be small for all plants. The effect of license renewal on the water quality impacts from decommissioning was considered a Category 1 issue in the 1996 GEIS. On the basis of a review of current information, these conclusions are considered valid for surface water. An additional 20 years of operation during the license renewal term would not change the magnitude of these impacts.

The activities listed above include some that may affect groundwater quality through the infiltration of water used for various purposes (e.g., cooling of cutting equipment, decontamination spray, and dust suppression). Best management practices are expected to be employed as appropriate to collect and manage these waters.

In the decommissioning GEIS (NRC 2002a), evaluations focused on water use and water quality. The following activities were identified as having the potential to affect groundwater:

- Potable water from wells,
- Dewatering systems, and
- Leachate from rubble.

Potable water would be required during decommissioning. The typical source for this supply is onsite groundwater, though surface water or an offsite municipal source of surface water or groundwater may be used at some sites. The early stages of decommissioning and dismantling may involve a temporary, slight increase in the size of the overall site staff, and a proportional increase in the need for potable water may occur (NRC 2002a).

Dewatering is expected to continue as it does during the operational phase, without increased drawdown at nearby onsite or offsite wells.

The NRC proposed that groundwater chemistry may change as rainwater infiltrates through rubble. The increased pH could promote the subsurface transport of radionuclides and metals. However, this effect is expected to occur only over a short distance as a function of the buffering capacity of soil (NRC 2002a). Offsite transport of groundwater contaminants is not expected.

In the decommissioning GEIS (NRC 2002a), the NRC concluded that the impacts on water use and water quality from decommissioning would be small for all plants. The effect of license renewal on the water quality impacts from decommissioning was considered a Category 1 issue in the 1996 GEIS. On the basis of a review of current information, these conclusions are

considered valid for groundwater. An additional 20 years of operation during the license renewal term would not change the magnitude of these impacts.

Ecology

The termination of nuclear power plant operations would reduce some impacts and eliminate others. Impacts from systems that continue operating to support other units (i.e., where the license term for each unit does not end at the same time) on the plant site may continue to affect terrestrial or aquatic biota, but at a reduced level of impact.

Impacting factors that would cease following reactor shutdown would include cooling tower drift, cooling system maintenance and effluent discharges, and atmospheric emissions of radionuclides. If there are other reactor units at the power plant and they continue to operate, these factors would be reduced, but not eliminated. A number of impacting factors would continue to affect terrestrial resources, however. Until removed during decommissioning, cooling towers and transmission lines would continue to be collision hazards for birds.

Impacting factors on aquatic resources that are expected to stop or decrease after reactor shutdown include the withdrawal of water for cooling, discharge of heated cooling water, dredging activities, and onsite construction activities. Cooling demands of a reactor in cold shutdown will be greatly reduced, as will be the rate of water withdrawal to maintain appropriate water volumes and chemical quality in the cooling system. However, water withdrawal may not be completely eliminated unless or until fuel assemblies are removed from the reactor core. Also, water withdrawal rates will continue unchanged to support other units and facilities onsite that remain operational. Nevertheless, the impingement and entrainment of aquatic organisms would substantially decrease after plant operations cease, and the potential for impacts on aquatic communities from these factors would be reduced. In general, the termination of entrainment and impingement would have positive effects on affected organisms.

As identified in Section 4.6.1.2, the discharge of heated cooling water during operations has the potential to affect aquatic resources by altering the thermal regimes to which aquatic organisms are exposed, lowering the level of dissolved oxygen, and promoting gas supersaturation. Because the plant would discharge significantly smaller volumes of heated water after operations cease, the NRC anticipates that the plant's influence on the thermal conditions in the receiving waters would be greatly reduced.

During the years of plant operations, it is likely that an aquatic community that was acclimated to warmer temperatures and biocides would have developed within the mixing zone. Some aquatic organisms may have become established in the mixing zone because of the warmer environment, and these organisms likely would be adversely affected as the water temperature cooled and the original conditions were restored within the body of water. Organisms

susceptible to cold shock could be affected, depending on the timing and rate of change in water temperatures. Such effects, which occur primarily during winter months, would occur only during the initial period after the plant ceases operations, and they could be minimized by initiating reactor shutdown during seasons when cold shock would be less likely to occur and by gradually reducing inputs of heated effluent to the system. As a consequence of the return to a more natural thermal regime, it is anticipated that the composition of the aquatic organisms in that area would return to a composition similar to that in the surrounding areas of the receiving waters. Recovery of an aquatic community to the normal background composition is a process of variable duration that depends on the mobility of the organisms, sources of colonists, rate of growth and maturation of the species, and other factors (Cairns 1990). Populations of some invasive species, such as the water hyacinth (*Hydrilla verticillata*) that proliferates at the North Anna plant in Virginia as a result of the elevated temperature of discharges, may decline as water temperatures in the receiving body of water fall.

The impacts from the termination of nuclear power plant operations on a cooling pond depend largely on whether the pond continues to exist. For cooling ponds that are maintained during plant operation by pumping water from another water body, the ponds would likely revert to a terrestrial system after pumping stopped. Even if ponds are maintained by natural flow, water may no longer be impounded. Restoration of these previously impounded areas may be necessary to minimize adverse ecological impacts associated with the exposure of previously inundated substrates. If the ponds continued to exist, the nuclear plant's thermal effects on them would cease. Cessation of the heated effluent would change the composition and dynamics of the pond community until it resembled that of other ponds in the region not used for cooling.

Because there would no longer be a need to withdraw or discharge cooling water, it is also anticipated that dredging would no longer be needed in the vicinity of cooling water structures. Therefore, the potential for dredging to affect aquatic biota would also be eliminated, unless the cooling water system was still needed to cool other electrical generating systems. As described in Section 4.6.1.2, gas supersaturation has the potential to occur within the mixing zone of some power plants. Even though such effects have been reduced with mitigation measures, such as the use of diffusers in the discharge area, the potential for gas supersaturation and subsequent effects on biota as a result of plant operations would be eliminated or decrease from the potential under the proposed action. Activities that result in ground disturbance (e.g., new construction, maintenance of some areas) may also cease or decrease at power plants that are shut down as a consequence of the no-action alternative, but there would be some level of maintenance needed until the plant was decommissioned. This would result in a decrease or the cessation of potential effects on aquatic resources from the direct disturbance of aquatic habitats and the sedimentation that could occur as a result of ground disturbance in adjacent areas.

Because some structures may be left in place until decommissioning has been completed, there is a potential for some effects on aquatic resources to continue regardless of whether or not the reactor at a plant is operating. For example, dams constructed to maintain supplies of water for operational needs may continue to prevent migration of anadromous fish unless the structures are removed. In addition, maintenance activities would continue along the transmission line ROWs regardless of whether the plant is operating or not.

At coastal plants, the termination of nuclear plant operations could have a beneficial impact on the Federally listed loggerhead sea turtle (threatened), green sea turtle (*Chelonia mydas*, threatened), leatherback sea turtle (endangered), hawksbill sea turtle (endangered), and Kemp's ridley sea turtle (endangered), which have been impinged at several nuclear power plants (e.g., St. Lucie and Oyster Creek). Similarly, potential benefits to the Federally endangered West Indian manatee and pinnipeds, protected under the Marine Mammal Protection Act, could occur. For example, the West Indian manatee has been impinged at St. Lucie, and incidental takes of harbor seals, gray seals, harp seals, and hooded seals occur at the Seabrook plant. Potential impingement and entrainment losses of special status fish species could also decrease. Reactor shutdown could also decrease impacts on EFH, although only minimal adverse effects have been identified for the operating plants for which EFH assessments have been prepared (i.e., Pilgrim, Vermont Yankee, and Oyster Creek plants). Elimination of high-temperature discharges at plants in Florida may reduce habitat suitability for the West Indian manatee, particularly during winter. However, the West Indian manatee occupies other habitats in Florida that do not have artificially elevated temperatures, and it uses a number of thermal discharges from fossil fuel plants along both coasts of Florida (Laist and Reynolds 2005).

The NRC evaluated the potential impacts of decommissioning on ecological resources in the decommissioning GEIS (NRC 2002a). The conclusions of that evaluation are summarized here, but the focus of the present evaluation is on the incremental effects that would result from deferring decommissioning to a later date as a result of renewing the license for plant operations. In the 1996 GEIS, the NRC concluded that the ecological impacts of decommissioning activities would be the same with or without license renewal and was designated a Category 1 issue.

The NRC (2002a) evaluated potential impacts on terrestrial ecological resources during the decommissioning process via both direct and indirect disturbance of native plant or animal communities in the vicinity of the plant site. In most cases, the impacting factors and the potential impacts from decommissioning activities are similar to impacts that could occur as a consequence of continued operations and refurbishment activities at operating facilities. Direct impacts of decommissioning on terrestrial ecological resources could result from activities such as the clearing of native vegetation or filling of a wetland. Indirect impacts could result from erosion, dust, or noise. In most cases, land disturbances during decommissioning would result

in relatively short-term impacts, and the land would either recover naturally or would be landscaped appropriately for an alternative use after completion of decommissioning (NRC 2002a). The NRC determined that impacts on terrestrial resources from dust generation, noise, surface erosion and runoff, and migratory bird collisions associated with decommissioning would be minor and would continue only until decommissioning activities were completed (NRC 2002a). The effects of such impacts could be minimized by using standard best management practices.

At most commercial nuclear facilities, there is a relatively distinct operational area where most or all site activities occur. This operational area usually includes all areas within the protected area fence; the intake, discharge, cooling, and other associated structures; and adjacent paved, graveled, and maintained landscaped areas. The operational area may include the entire area disturbed during facility construction, but it is often considerably smaller. In most cases, the amount of land required to support the decommissioning process is relatively small and is a small portion of the overall plant site. Usually, the areas disturbed or used to support decommissioning are within the operational areas of the site and are also within the protected area. Decommissioning activities conducted within the operational areas are not expected to have a detectable impact on important terrestrial resources (NRC 2002a). However, it is expected that some sites will require the reconstruction or installation of new transportation links, such as railroad spurs, road upgrades, or barge slips, for the completion of decommissioning. The NRC (2002a) concluded that for facilities at which the decommissioning activities would be limited to existing operational areas, the potential impacts on terrestrial ecology would be small. It was further concluded that if habitat disturbance beyond the operational areas is anticipated, the impact on terrestrial resources could be small, moderate, or large and would have to be determined through a site-specific analysis.

In most cases, the impacting factors and the potential impacts on aquatic resources from decommissioning activities are similar in nature to impacts that could occur as a consequence of refurbishment activities for operating facilities. Direct impacts of decommissioning on aquatic resources could result from activities, such as removing shoreline or in-water structures (i.e., the intake or discharge facilities); dredging a stream, river, or ocean bottom; or depositing fill in a stream or bay. Indirect impacts could result from effects such as runoff and sedimentation from disturbed upland areas (NRC 2002a). During decommissioning, aquatic habitats at the plant site might also be disturbed in order to construct support facilities, such as a dock for barges or a bridge over a stream or some other body of water. In addition, aquatic environments away from the plant site could be disturbed during the upgrading or installation of new transportation systems (e.g., a new rail line to support the removal of large components) or during the installation or modification of transmission lines. In most cases, aquatic habitat disturbances from decommissioning would result in relatively short-term impacts on small areas, and either the affected aquatic habitats would recover naturally or the impacts could be

mitigated (NRC 2002a). Typically, these impacts would be temporary and would not detectably alter or destabilize important ecological attributes (NRC 2002a).

If decommissioning did not include removal of shoreline or in-water structures and if all decommissioning activities were confined to the plant operational areas, impacts from decommissioning on aquatic resources would be expected to be minor and would result primarily from increased sediment from physical alterations of the site. In such cases, it is expected that the impact on aquatic resources would be nondetectable, nondestabilizing, and easily mitigated (NRC 2002a). Greater impacts on aquatic resources could occur if decommissioning entailed the removal of structures from the shoreline or in-water environment, removal of contaminated soil in or near an aquatic environment, or dredging and significant modification of barge loading facilities (NRC 2002a).

Permits for discharge to the aquatic environment during operations are almost always for discharge amounts that are greater than planned or realized during decommissioning. In almost all cases examined, licensees expect to restrict activities to previously disturbed areas and operate within the limits of operational permits (NRC 2002a). The NRC (2002a) concluded that for facilities at which the decommissioning activities would be limited to existing operational areas, the potential impacts on aquatic resources would be small. It further concluded that if habitat disturbance beyond the operational areas was anticipated, the impacts on aquatic resources could be small, moderate, or large and would have to be determined through site-specific analysis.

In most cases, the impacting factors and the potential impacts on threatened or endangered species (including other special status species or habitats) from decommissioning activities are similar in nature to impacts that could occur as a consequence of refurbishment activities for operating facilities. These species could be affected during the decommissioning process, either through direct effects or through disturbances of habitats on which the species rely for food or shelter. If a nuclear plant ceased operations for an extended period of time, the situation could allow the establishment of onsite populations of protected species that could be adversely affected by subsequent facility decommissioning at the end of the storage period (NRC 2002a).

The greatest potential for impacts from decommissioning on protected species is associated with physical alteration or dismantlement of the facilities, landscape, or aquatic environment. The impacts of decommissioning could result from activities similar to those described for terrestrial and aquatic resources. The NRC (2002a) concluded that the potential impacts on threatened and endangered species may be small, moderate, or large and that the adverse impacts and associated significance of the impacts must be determined on a site-specific basis.

The impacts of decommissioning on ecological resources depend primarily on the types of decommissioning activities that are conducted and whether those activities occur inside or outside the existing operational area. Although many of the activities that could affect ecological resources during decommissioning are the same as the activities that occur during the normal operation of a nuclear power plant, the length of time that operations have been ongoing will not change the level of impacts associated with decommissioning. Therefore, deferring decommissioning by renewing a plant's license would have the same impacts on ecological resources, if any, as would occur as a result of starting decommissioning sooner. The impact from the termination of plant operations and decommissioning on ecological resources attributable to license renewal would be small for all nuclear plants.

Historic and Cultural Resources

The termination of nuclear plant operations would not affect historic or cultural resources.

The NRC conducted an analysis of the potential effects of decommissioning on historic and archaeological (cultural) resources and found that the potential onsite impacts at sites where the disturbance of lands would not go beyond the operational areas would be small (NRC 2002a). The continued operation of a plant under a renewed license would not be expected to alter this conclusion. Similar activities are expected to continue before and after license renewal. The majority of impacts on historic and cultural resources would have occurred during the original construction of the plant. Continued use has the potential to affect these resources, as discussed in Section 4.7.1. There is nothing inherent in using a plant for a longer time that would increase or decrease the impact on these resources from decommissioning. Adherence to procedures that take into account the impact on historic and cultural resources would mitigate any additional impacts.

Delaying decommissioning is not expected to have any effect on historic and cultural resources within a transmission line ROW. Impacts on historic and cultural resources would likely have occurred during initial construction. On the basis of these considerations, the effect of license renewal on the impacts from the termination of plant operations and decommissioning would be small at all nuclear plant sites.

Socioeconomics

Terminating nuclear plant operations and reducing plant staff would have an impact on regional employment and income and the quality and availability of community services. Nuclear power plants generate a significant amount of employment and income in the local economies, which would no longer occur with the cessation of plant operations. Plant wage and salary expenditures as well as other expenditures would decrease. Demand for services and housing

would disappear or substantially decline. Indirect employment and income created as a result of nuclear power plant operations would also disappear or be reduced.

The termination of plant operations would also have an impact on population and housing. Plants located in rural communities have relatively small housing markets, low median house values, and stable vacancy rates. Loss of plant employment in rural communities would likely mean plant workers and their families would leave the area in search of jobs elsewhere, creating a decline in demand for housing, depressing housing prices and values. Conversely, housing markets in semi-urban regions in the vicinity of metropolitan areas generally experience more rapid, housing turnover, higher prices, and lower vacancy rates. While the loss of plant employment in semi-urban regions may mean some out-migration of workers, many plant employees would be able to find more opportunities for employment. In addition, the impact on the housing market could be offset by demand for housing with employment growth in other parts of the regional economy.

The impacts from the loss of tax revenue due to the termination of plant operations and the availability of community services and public education could be small to large. Nuclear power plants generally provide significant tax revenue to state, county, township, municipal, and public school districts. This revenue is spent on education, public safety, transportation, and community services. The loss of tax revenues from the nuclear plant could mean the reduction and/or the elimination of some community services and a potential deterioration in the quality of public educational services. Any traffic congestion caused by the nuclear plant workforce would be reduced due to plant closure. The impacts of decommissioning are summarized from the NRC Decommissioning GEIS (NRC 2002a).

Although the socioeconomic impact from the termination of plant operations and decommissioning could be large, license renewal would only delay the timing of the impact and would not affect its magnitude. On the basis of these considerations, the NRC concludes that the incremental effect of license renewal on the impact of decommissioning would be small for all socioeconomic issues at all nuclear plants.

Human Health

With the termination of plant operations, there would be a period between the time when a reactor stopped operating and when the decommissioning of the plant began that could range from months to years. During that period, the reactor would be placed in a cold shutdown condition and maintained. The fuel might be removed from the core and put in the spent fuel storage pool. Activities related to placing the reactor in shutdown status could result in potential radiation exposure to workers. There might be some liquid effluent releases to the environment, although at a lower level, that could result in radiation exposure to the public. The regulatory requirements and dose limits during this period for workers and the public are the

same as those for operating reactors (see Section 3.9.1.1). The radiological impacts on workers and members of the public during this time period would be less than those during current operations and those expected during decommissioning.

Public exposure to EMFs would decrease after transmission lines were de-energized. Power would still be provided to the site, and workers might be exposed to EMFs during this period. It is expected that the impacts from EMFs during this period would be less than the impacts from current operations.

Because reactor shutdown would result in the cessation or reduction of cooling system operations, the public would not be exposed to chemical and microbiological hazards associated with these operations. The plant workers might be exposed to chemical, microbiological, and other hazards during this period, but the hazards would be small and bounded by the hazards either during operations or decommissioning.

The remainder of this section evaluates the effects of license renewal on the human health impacts from the termination of nuclear power plant operations and decommissioning. The issues considered here include the impacts from radiological exposure and risk, chemical hazards, microbiological hazards, physical occupational hazards, and electrical hazards. Work during decommissioning activities is generally done according to an environmental safety and health plan that serves as a guidebook for anticipating hazards and preventing any injury or harm. In the 1996 GEIS, the NRC considered the effect of license renewal on only the radiation dose impacts of decommissioning.

The human health impacts from physical, chemical, and microbiological hazards during the termination of plant operations and decommissioning would be small for all plants. The effect of license renewal on the impact from terminating plant operations and decommissioning on human health also would be small at all plants. Doses to the public would be well below applicable regulatory standards, regardless of which decommissioning option was used. Collective occupational doses would increase no more than 0.1 person-rem, attributable to the buildup of long-lived radionuclides during the license renewal term, but the individual worker doses would be well below the existing dose limits. On the basis of these considerations, the NRC concludes that the effect of license renewal on the impact from decommissioning on human health would be small for all nuclear plants.

<u>Radiological Exposure</u>

During decommissioning activities, workers are exposed to radioactive materials that are present in the reactor and support facilities, and members of the public may be exposed to radioactive materials that are released to the environment. The regulatory requirements and dose limits during decommissioning are the same as those for operating reactors (see

Section 3.9.1.1). Many activities during decommissioning are similar to the activities that occur during normal maintenance outages, such as decontamination of piping and surfaces; removal of piping, pumps, and valves; and removal of heat exchangers. Some of the activities, such as removal of the reactor vessel or demolition of facilities, are unique to decommissioning. The decommissioning GEIS (NRC 2002a) evaluated the potential radiological impacts of decommissioning activities for both PWRs and BWRs. Public and occupational radiation exposures from decommissioning activities were evaluated on the basis of information derived from recent decommissioning experience.

Occupational Radiation Exposure

Both the 1996 GEIS and the decommissioning GEIS provide estimated collective occupational radiation doses for decommissioning PWRs and BWRs for the three decommissioning options. The decommissioning GEIS also includes the estimated collective occupational radiation dose for plants that are currently in the decommissioning process. The DECON method had the highest dose, followed by ENTOMB and then SAFSTOR. According to the decommissioning GEIS, occupational doses to individual workers during decommissioning activities are estimated to average approximately 5 percent of the regulatory dose limits established in 10 CFR Part 20 and to be similar to, or lower than, the doses experienced by workers in operating facilities.

A 20-year extension in operations would increase the occupational doses from long-lived radionuclides such as niobium-94, but these increases would not be significant for the DECON option because short-lived radionuclides (primarily cobalt-60) are the principal contributor to the occupational dose (NRC 1996). For the SAFSTOR option, an additional 20 years of operations would increase the amount of niobium-94 by 50 percent. The contribution of niobium-94 to the collective dose for this decommissioning option for 40 years of plant operation is less than 0.2 person-rem; therefore, the increase in dose during decommissioning after 20 additional years of operations would be less than 0.1 person-rem. Total worker doses may increase, but individual worker doses would be well below the regulatory limits. The NRC concluded that the impact of an additional 20 years of plant operation on the radiological doses to workers would be of small significance for all nuclear plants.

Radiation Exposure to the Public

According to the 1996 GEIS, the radiation dose to the public during decommissioning would result primarily from waste shipment for both PWRs and BWRs, and the dose would be almost exclusively attributable to the shipment of short-lived radionuclides, mainly cobalt-60. During decommissioning, the estimated increased risk of fatal cancer to an average member of the public would be much less than 1×10^{-6} (NRC 2002a). If a plant operated an additional 20 years, only the quantities of long-lived radionuclides would increase, and only the dose caused by the long-lived radionuclides would increase. As discussed in the 1996 GEIS, the

dose to the public from long-lived radionuclides after 40 years of plant operation is expected to be negligible, and the increase in quantities of long-lived radionuclides after an additional 20 years would result in a negligible dose (less than 0.1 person-rem). Accordingly, the NRC concluded that the contribution of license renewal to radiological impacts to the public from decontamination would be of small significance at all nuclear plants.

Chemical Hazards – Decommissioning involves many activities that expose workers to chemical hazards, including paints, asbestos, lead, polychlorobiphenyls, mercury, quartz, and other hazardous materials in building materials. During decommissioning, workers may also be exposed to fumes (that often include lead and arsenic) and smoke from flame cutting and welding. According to the decommissioning GEIS, with proper planning, workplace design, and engineering controls, supplemented by the use of personal protective equipment and administrative solutions, the impact of chemical hazards on workers would be of small significance at all nuclear plants. A 20-year delay caused by license renewal would not change the projected human health impact from chemical hazards because (1) there would not be any more hazardous chemicals present, (2) the workers would still would have a proper work plan, and (3) all required controls would be in place.

Microbiological Hazards – During decommissioning, workers may be exposed to molds and other biological organisms that grow in and on buildings. Proven industrial hygiene principles mitigate the risk of developing diseases from these organisms. According to the decommissioning GEIS, if a thorough inspection of the facility is conducted and proper cleansing and personal protective equipment are used when biological agents are identified, the impacts of biological agents on workers would be small. A 20-year license renewal would not change the microbiological hazards associated with decommissioning at any nuclear plant because the workers would still be using proper cleansing and personal protective equipment when biological hazards were identified.

Electromagnetic Fields – Operating transmission lines produce an EMF. When a nuclear power plant ceases to operate, no electricity is transmitted. Therefore, the public's exposure to EMF could decrease unless the power that was no longer being generated at the plant was replaced by new power generation. Power would still be provided to the site, and workers might be exposed to EMF during decommissioning. It is expected that the impacts during decommissioning would be bounded by the impacts from current operations. The EMF impact associated with decommissioning after a 20-year license renewal term would not differ from that without renewal.

Other Hazards – The major sources of physical occupational hazards during decommissioning involve the operation and use of construction and transportation equipment. Workers may be exposed to extreme temperatures while working outdoors. They may operate cranes near power lines, dig near buried cables, and encounter electrical hazards. During demolition or dismantlement, the workers may use cutting torches, which can start fires. It is expected that all of the activities would be anticipated in advance, and that proper precautions would be taken to minimize any adverse impacts. A 20-year delay in decommissioning caused by license renewal would have no effect on the projected human health impact from other hazards, because the workers would have the proper work planning, workplace design, and controls in place. Moreover, the conditions would not be more hazardous after an additional 20 years.

Accidents During the Termination of Nuclear Plant Operations and Decommissioning

The impacts of postulated accidents during the license renewal term are discussed in Section 4.9.1.2. The general characteristics, including the source terms, of postulated accidents are expected to be similar after reactor shutdown; therefore, the consequences would also be expected to be similar. Because of the enhanced aging management activities and extended life of certain systems, structures, and components, there may be small differences in the probabilities of occurrence of these accidents after reactor shutdown. These differences, however, are not expected to be significant, and the risks of accidents after reactor shutdown would be expected to be similar to or less than the risks discussed in Section 4.9.1.2 for the proposed action.

The impacts associated with accidents that can occur during the decontamination and decommissioning of nuclear power plants were analyzed in the Decommissioning GEIS (NRC 2002a). The radiological impacts of accidents were discussed in Section 4.3.9 of the same document, and nonradiological impacts were discussed in Section 4.3.10. Radiological accidents that were considered in the analysis included both those that relate to onsite storage and handling of spent nuclear fuel and those that are unrelated to spent nuclear fuel. The non-fuel-related accidents centered on decontamination, dismantlement, and storage-type accidents. The accidents included fires, handling accidents, explosions (e.g., explosion of liquid propane gas tanks), and accidental releases of liquid radioactive wastes from storage tanks.

Nonradiological accidents were considered under occupational issues and included physical, chemical, ergonomic, and biological hazards. The category of physical hazards included potential injuries or deaths resulting from the operation and use of construction and transportation equipment. Electrical hazards, including the potential for electrocution, were also considered. The potential exposure of workers to chemical and biological agents was considered under both normal operations and accidents. Ergonomic conditions were evaluated from the point of view of ergonomic stress such as discomfort and fatigue affecting the workers' performance and safety.

The NRC made the following conclusions regarding radiological accidents associated with decommissioning on the basis of the evaluations conducted for the decommissioning GEIS (NRC 2002a):

> The NRC has considered available information, including comments received on the draft of Supplement 1 of NUREG-0586, concerning the potential impacts of non-spent-fuel-related radiological accidents resulting from decommissioning. This information indicates that, with the mitigation procedures in place, the impacts of radiological accidents are neither detectable nor destabilizing. Therefore, the NRC makes the generic conclusion that the impacts of non-spent-fuel-related radiological accidents are SMALL. The NRC has considered mitigation and concludes that no additional measures are likely to be sufficiently beneficial to be warranted.
>
> The NRC has considered available information, including comments received on the draft of Supplement 1 of NUREG-0586, on the potential impacts of spent-fuel-related radiological accidents resulting from decommissioning. The NRC affirms the conclusions in the Waste Confidence Rule and concludes that the impacts of spent fuel storage are SMALL. The NRC concludes that additional mitigation measures are not likely to be sufficiently beneficial to be warranted.

The conclusion regarding the occupational issues, which included nonradiological accidents, was as follows:

> The NRC has considered available information, including comments received on the draft of Supplement 1 of NUREG-0586, on the potential impacts of decommissioning activities on occupational issues. This information indicates that the impacts on occupational issues are not detectable or destabilizing. Therefore, the NRC makes a generic conclusion that, for all plants, the potential impacts on occupational issues are SMALL. The NRC has considered mitigation measures and concludes that no additional mitigation measures are likely to be sufficiently beneficial to be warranted.

License renewal would merely delay when accidents associated with the termination of nuclear power plant operations and decommissioning could occur and would not affect their probability or consequence.

Environmental Justice

Termination of nuclear plant operations could have small to moderate adverse impact on minority and low-income populations resulting from loss of employment and income. The curtailment of plant tax revenues affecting the coverage and quality of community services and education could disproportionately affect low-income and minority populations. Many of the regions surrounding nuclear plants have lower-than-average per capita income and larger-than-average populations living below the poverty line, and minority individuals may rely more heavily on community-funded services than the general population. Impacts from the loss of employment, income, and tax revenues could be offset if replacement power generating facilities were built or other employment opportunities were created at or near existing nuclear power plant sites.

Decommissioning activities following the termination of plant operations could affect air, land, water, and ecological resources in the area around each nuclear power plant site, which might produce high and adverse health and other environmental impacts on the general population. Population groups that have particular resource dependencies or practices (e.g., subsistence agriculture, hunting, fishing) could be disproportionately affected. It is unlikely that license renewal would substantially alter the impact of decommissioning on minority and low-income populations around each nuclear plant.

The pathways through which the environmental impacts associated with decommissioning activities at nuclear plants might affect human populations, and the extent to which minority and low-income populations could be disproportionately affected, have been identified in the decommissioning GEIS (NRC 2002a). At some plants, resource dependencies and practices (e.g., subsistence agriculture, hunting, fishing) have been identified. In addition, location-dependent disproportionately high and adverse impacts affecting minority and low-income populations have been also identified near some nuclear plants. It is expected that the impact of decommissioning after a license renewal term would be similar to that identified in the decommissioning GEIS (NRC 2002a).

Although the impact from the termination of nuclear power plant operations and decommissioning on minority and low-income populations could be more than small, license renewal would merely delay the occurrence of this impact and would not affect its magnitude.

On the basis of these considerations, the NRC concludes that the effect of license renewal on the environmental justice impacts from the termination of nuclear power plant operations and decommissioning would be small for all nuclear plants.

Waste Management and Pollution Prevention

After termination of nuclear plant operations, there would be a period before the beginning of decommissioning when the reactor would be placed in a cold shutdown condition and maintained. The fuel might be removed from the core and put in the spent fuel storage pool. There might also be activities related to placing the reactor in shutdown status that could result in the generation of some waste. The types of waste generated during this period would be the same as the types of waste generated during operations and decommissioning. The quantities of waste generated would be smaller than the quantities generated during either operations or decommissioning. The impacts associated with the management of LLW, hazardous waste, mixed waste, and nonradioactive and nonhazardous waste during operations and decommissioning would be small. These impacts would also be small when the reactor was in shutdown status pending decommissioning. All pollution prevention and waste minimization measures instituted during operations would likely continue to be used to minimize releases to the environment and minimize the quantities of waste generated. As discussed in Section 4.11.1, under the Waste Confidence Rule, the NRC has determined that spent nuclear fuel could be stored onsite safely and with a minimal environmental impact for at least 30 years beyond the operating life (including the license renewal term when applicable) of nuclear power plants.

The decommissioning process, by its very nature, generates wastes. The wastes generated are shipped offsite, where they are permanently disposed of, or stored onsite for a certain period or indefinitely. Under the three decommissioning options analyzed in the decommissioning GEIS (NRC 2002a), the DECON process would generate the most waste. In this process, the equipment, structures, and portions of the facility and site that contain radioactive contaminants are removed and decontaminated to a level that permits termination of the license after cessation of operations. In the SAFSTOR process or ENTOMB process, the materials are left onsite temporarily or permanently, respectively.

The impacts from decommissioning that result in the generation of wastes and their onsite management until they are loaded onto vehicles to be shipped offsite are addressed under other disciplines discussed in Section 4.12.2.1. This section addresses the impacts from transporting the wastes to disposal facilities and from their disposal. If there are interim locations offsite where wastes undergo treatment before being sent to a disposal facility, they are also discussed here.

The types of wastes generated during decommissioning would include LLW, mixed waste, hazardous waste, and nonradioactive, nonhazardous waste (see Section 3.11 for waste type definitions). No spent fuel, HLW, or transuranic waste would be generated during decommissioning because spent fuel would have been removed from the reactor and stored in either the reactor's spent fuel pool or in an ISFSI before the start of decommissioning.

It is expected that most of the waste generated during decommissioning would be LLW and nonradioactive, nonhazardous waste. There would be small quantities of mixed waste (mostly paints, waste oils, solvents, and metals such as lead or cadmium) that would be managed per the requirements of the Resource Conservation and Recovery Act (RCRA) for its hazardous component and the Atomic Energy Act (AEA) for its radioactive component, as described in Section 3.11.3. The quantities of hazardous waste that would be generated would also be small and would mainly consist of paints, solvents, and batteries. Some of the materials used to decontaminate surfaces could also end up being classified as mixed waste. Both mixed wastes and hazardous wastes could be sent to an authorized waste treatment center for incineration or some other form of treatment before being sent to a disposal facility authorized to accept such waste. All of these activities would be conducted according to permits and requirements established under RCRA. The nonradioactive, nonhazardous waste, consisting mainly of rubble and debris, would be sent to a local landfill.

The impacts associated with transporting equipment and materials (radiological and nonradiological) offsite during decommissioning are analyzed in Section 4.3.17 of the decommissioning GEIS (NRC 2002a). The materials transported offsite would include all wastes generated onsite. Radiological impacts would include exposure of transportation workers and the general public along the transportation routes. Nonradiological impacts would include increased traffic volume, additional wear and tear on roadways, and potential traffic accidents. It was concluded that the transportation impacts would not be destabilizing. Therefore, the NRC made the generic conclusion that for all plants, the potential transportation impacts would be small.

There might be small differences in the quantities and characteristics of the waste that would be generated during decommissioning after the license renewal term and the waste that would be generated after the original license period. If the plant license was not renewed, the reactor could be decommissioned at the end of the current license term, whereas if the license was renewed, the decommissioning would take place approximately 20 years later. Additional waste might accumulate at the site, or the radioactivity of some components undergoing decommissioning might be slightly higher at the end of the license renewal term. For example, if there were any refurbishment activities during the license renewal term that resulted in equipment (e.g., steam generators) being taken out of service and subsequently stored onsite awaiting disposition during decommissioning, the amounts of certain types of waste (e.g., LLW) generated from decommissioning under the proposed action would be more than the amounts generated during the original license period. Because of the differences in timing, some of the materials in and around the core of the reactor might have slightly higher radioactivity under the proposed action as a result of a buildup in long-lived radionuclides. This situation would mainly affect the amount of greater-than-Class C LLW at the site. Assuming that the spent nuclear fuel continued to be stored onsite during the license renewal term, there would also be more

spent fuel to manage. Similarly, if certain LLW classes (e.g., Class A, B, and C wastes) had to be stored onsite for long periods (for the reasons discussed in Section 4.11.1), the amounts of those wastes that would have to be addressed during decommissioning might be larger after the license renewal term. However, it is not expected that these differences would significantly alter the practices employed to manage the wastes or the impacts associated with managing the wastes generated during decommissioning.

The decommissioning activities would be designed and implemented in ways to prevent pollution and minimize the amount of waste generated. All the methods mentioned in Section 3.11.5, including source reduction and recycling of materials either onsite or offsite, would be used. Under source reduction, the licensees would use decontaminating agents and technologies that would generate less waste, particularly mixed and hazardous waste. They would also implement procedures and practices that would be aimed at preventing or minimizing gaseous and liquid releases to the environment and the quantities of waste generated.

The quantity of LLW that would be generated from the decommissioning of a model 1000-MW(e) power plant is included in the quantities of LLW reported on in Section 4.12.1.1. The quantities of mixed waste and hazardous waste that would be generated from decommissioning of nuclear power plants would be relatively small and managed in a way that would protect human health and the environment to meet RCRA requirements. Clean wastes (wastes that are neither radioactive nor hazardous) would be disposed of at a local permitted landfill. The transportation of wastes from a model LWR is also reported on in Section 4.12.1.1. The offsite transportation of equipment and wastes from a power plant undergoing decommissioning was also analyzed in the decommissioning GEIS (NRC 2002a), and the impact was found to be small.

On the basis of these considerations, the NRC concludes that the effect of license renewal on the waste management impacts from the termination of nuclear power plant operations and decommissioning would be small for all plants.

4.12.2.2 Termination of Plant Operations and Decommissioning of Energy Alternative Power Plants

Fossil Energy Alternatives

The environmental consequences from the termination of power plant operations and the decommissioning a fossil fuel energy facility are dependent on the completeness and sufficiency of the approved decommissioning plan. It is reasonable to expect that approvable decommissioning plans would include, at least, the following elements and requirements:

- Removal of all unneeded structures and facilities to at least 3 ft (1 m) below grade (in order to provide an adequate root zone for site revegetation).

- Removal of all coal, all coal combustion waste, and all FGD sludge and/or by-products.

- Removal of water intake and discharge structures.

- Dismantlement and/or removal of all ancillary facilities, including rail spurs, coal handling and preparation facilities, cooling towers, natural gas pipelines, onsite wastewater treatment facilities, and access roads.

- Removal of all surface water intake and discharge structures.

- Removal of all accumulated sludge, and closure and removal of all surface water impoundments.

- Proper closure of all onsite groundwater wells.

- An aggressive recycling program for removed equipment and dismantled building components; materials awaiting recycling would be stored at an offsite facility.

- Minimal delay times for removed materials and equipment at temporary laydown areas.

- Expeditious disposal of solid and hazardous wastes at approved facilities; as necessary, remediation of waste handling and storage areas.

- Cleanup and remediation of all incidental spills and leaks.

- Successful execution of an approved revegetation plan for the site.

- Other actions as necessary to ensure restoration of the site to a condition equivalent in character and value to the greenfield or brownfield site on which the facility was first constructed.

Assuming that decommissioning occurs according to a decommissioning plan as described above, environmental consequences (at either a greenfield site or a brownfield site) would include:

- Short-term impacts on air quality and noise from the operation of vehicles and equipment used to deconstruct structures and facilities and the increased number of workforce vehicles traveling to and from the site; impacts include release of criteria

pollutants and generation of fugitive dust and noise (including from the possible use of explosives to deconstruct buildings or structures); impacts would be similar to, but of shorter duration than, those experienced during facility construction.

- Short-term impacts on land use and visual resources due to increased human activities on the site and establishment of temporary holding areas for dismantled components and other deconstruction debris (some of which may be at offsite locations – e.g., at rail headers).

- Short-term increase in local traffic as a result of increases in workforce personnel onsite and truck and rail traffic bringing deconstruction equipment to the site and transporting dismantled structures, removed equipment, and deconstruction debris.

- Long-term reestablishment of vegetation and wildlife communities.

- Restoration of visual values through removal of manmade structures and restoration of native vegetative and wildlife communities.

- Short-term increase in local economic activity with the increased dismantlement workforce and other related functions such as transportation, followed by a longer-term downturn of local economy due to loss of jobs of operational personnel.

- Reestablishment of original land use opportunities.

- Elimination of health and safety impacts on operating personnel and the general public from routine operation of the facility and as a result of accidents involving the facility; short-term increase in health and safety risk to decommissioning workforce due to complex and concentrated industrial activities, and short-term increase in risk of transportation-related accidents, due to increased traffic densities throughout decommissioning.

New Nuclear Alternatives

According to 10 CFR Part 52, decommissioning impacts for a nuclear power plant include all activities related to the safe removal of the facility or site from service and the reduction of residual radioactivity to a level that permits release of the property under restricted conditions or unrestricted use and termination of a license. The decommissioning process and the activities occurring during decommissioning would be similar to those associated with current reactors, (see Sections 2.1.3 and 4.12.2.1).

Environmental consequences would also be similar to those discussed in Section 4.12.2.1 and would include:

- Temporary impacts on land use and visual resources, including the construction of temporary buildings and parking lots and the addition or expansion of laydown areas. (Many plants have existing, previously disturbed areas available for these temporary land use activities.)

- Reduced (small) water use and water quality impacts as water consumption decreases significantly after cessation of operations. Dewatering and water used for spent fuel cooling would continue until spent fuel was removed from the site. Surface water runoff or release of substances would be possible but should not have a detectable effect on the environment.

- Temporary increases in local traffic that would result from the additional workforce onsite; truck and rail traffic bringing deconstruction equipment to the site; and the transport of dismantled structures, removed equipment, and waste from the site.

- Long-term reestablishment of vegetation and wildlife communities.

- Short-term improvements in the local economy because of the increased workforce for decommissioning activities, followed by a long-term downturn of the local economy because of the loss of jobs of operational personnel.

- Potential (regulated) radiological doses to the public and decommissioning workforce at the facility from activities such as removal of the reactor vessel and demolition of facilities.

- Increased but temporary occupational safety and health risk to the workforce due to complex and concentrated industrial activities.

Impacts on threatened and endangered species and environmental justice impacts are considered site-specific impacts. Land use involving offsite areas to support decommissioning, aquatic and terrestrial ecology for activities beyond the operational area, and historic and cultural resources for activities beyond the operational area that have not been surveyed for historic and cultural resources are all considered conditionally site-specific.

Renewable Alternatives

In most instances, the termination of power plant operations and the decommissioning of renewable energy systems would follow the reverse of construction. Impacts would be similar in nature to the impacts discussed in the Environmental Consequences of Construction of Renewable Energy Alternatives section above, albeit likely for shorter periods of time. Decommissioning is expected to follow a preapproved decommissioning plan and would involve not only removal of facility components and operational wastes and residues, but also reclamation of the land to its original state. Decommissioning scenarios are expected to involve the following actions:

- Removal of all unneeded structures and facilities to at least 3 ft (1 m) below grade (to provide an unencumbered root zone for site revegetation).
- Removal of all unspent biomass fuel and all solid wastes from combustion and facility maintenance.
- Removal of water intake and discharge structures (if present to support combustion facilities and steam cycles).
- Dismantlement and/or removal of all ancillary facilities, including rail spurs, biomass (and coal) fuel handling and preparation facilities, cooling towers, natural gas pipelines, onsite wastewater treatment facilities, and access roads.
- Removal of all surface water intake and discharge structures.
- Removal of all accumulated sludge, and closure and removal of all surface water impoundments.
- Proper closure of all onsite groundwater wells.
- Aggressive recycling program for removed equipment and dismantled building components; materials awaiting recycling would be stored at an offsite facility.
- Minimal delay times for removed materials and equipment at temporary laydown areas.
- Expeditious disposal of solid and hazardous wastes at approved facilities; remediation as necessary of waste handling and storage areas.
- Cleanup and remediation of all incidental spills and leaks.
- Successful execution of an approved revegetation plan for the site.

- Offsite ancillary facilities (access roads, utilities, pipelines, electrical transmission towers) would be removed unless it is determined that they can serve other purposes; buried utilities and pipelines could be abandoned in place if their removal would result in significant disruption to ecosystems.

- Other actions as necessary to ensure restoration of the site to a condition equivalent in character and value to the greenfield or brownfield site on which the facility was first constructed.

Termination of operations and decommissioning of offshore facilities could involve the following unique actions and strategies, depending on location:

- Wind turbine tower foundations and communication and power cables buried in the seafloor could be allowed to remain to avoid the disruption that would result from their removal.

- Underwater structures could be allowed to remain in place to serve as artificial fish habitats.

- Structures that served as electrical service platforms could be allowed to remain in place to serve as artificial reefs.

The termination of operations and the decommissioning of hydroelectric facilities could follow unique paths. For large store-and-release facilities, eliminating the dam and reservoir and restoring the river to its natural flow could have dramatic and adverse consequences to both upstream and downstream ecosystems. Especially where store-and-release dams serve purposes other than power generation (e.g., flood control and irrigation), complete elimination of the structures and reservoir and restoration of original river conditions would be at cross purposes. While turbines, generators, and other equipment associated with power production could be removed, the dam and reservoir would be expected to remain largely intact, as would fish ladders and passages. Penstocks and other devices that control the release of water from the reservoir are expected to remain functional. A reduced workforce would also remain to operate the dam for flood control and irrigation purposes. Impacts on upstream land uses would remain generally unaltered from the impacts during the dam's operating period.

Smaller scale, run-of-the-river dams (so called low-impact hydro facilities[(a)]) that have limited impact on upstream water levels and downstream water flow rates would likely be completely dismantled and removed during decommissioning.

4.13 Cumulative Impacts of the Proposed Action

Cumulative impact is defined by the CEQ in 40 CFR 1508.7. Actions to be considered in cumulative impact analyses include new and continuing activities, such as license renewal, that are conducted, regulated, or approved by a Federal agency. The cumulative impacts analysis takes into account all actions, however minor, since impacts from individually minor actions may be significant when considered collectively over time. The goal of the analysis is to identify potentially significant impacts to improve decisions and move toward more sustainable development (CEQ 1997; EPA 1999).

Definition of Cumulative Impact

The impact on the environment that results from the incremental impact of an action when added to other past, present, and reasonably foreseeable future actions, regardless of what agency (Federal or non-Federal) or person undertakes such other actions.

The analysis of cumulative impacts focuses on the resources that could be affected by the incremental impacts from continued operations of the nuclear plant. The CEQ discusses the assessment of cumulative effects in detail in its report entitled, *Considering Cumulative Effects Under the National Environmental Policy Act* (CEQ 1997). On the basis of the guidance provided in the CEQ report, a cumulative impact analysis would consider the following:

1. The geographic scope (i.e., regions of influence). The regions of influence encompass the areas of affect and the distances at which impacts associated with license renewal may occur. Geographic boundaries may vary by the resource area being evaluated and the distances over which an impact may occur (e.g., the evaluation of impacts on air quality may have a greater regional extent than that of impacts on historic and cultural resources).

2. The time frame for the analysis. The time frame incorporates the sum of the effects of renewal in combination with past, present, and future actions, since impacts may accumulate or develop over time. The reasonably foreseeable time frame for future actions evaluated is 20 years (based on the typical license renewal term) from the time the license renewal is granted. Past and present actions include all actions up to and

(a) Low-impact hydro facilities are considered to have a power capacity of less than 30 MW.

including the time of the license renewal application; future actions are those that are "reasonably foreseeable"; that is, they are ongoing (and will continue into the future), are funded for future implementation, or are included in firm, near-term plans. Past and present actions are generally accounted for in the baseline assessment presented in the affected environment sections for each resource area (Chapter 3 of this GEIS). The direct and indirect impact analyses present in Chapter 4 address the incremental impacts of license renewal. These analyses are carried forward to the cumulative impact analysis, which expands the analysis to consider other past, present, and future actions.

3. The potential impacting factors of each past, present, or reasonably foreseeable future action or activity. Both the license renewal and other actions (related and nonrelated) will generate factors that could contribute to cumulative impacts. The impacts of activities associated with the proposed action (license renewal) are discussed for each resource area in this chapter. In cases where the contributions of activities to an impacting factor are uncertain or not well known, a qualitative evaluation is made.

For some resource areas (e.g., water and aquatic resources), the contributions of ongoing actions within a region on cumulative impacts are regulated and monitored through a permitting process (e.g., NPDES) under State or Federal authority. In these cases, it may be assumed that cumulative impacts are managed as long as these actions (facilities) are in compliance with their respective permits. If, however, the analysis determines that a significant contribution to cumulative impacts would occur as a result of license renewal, measures to ensure that adverse impacts are avoided, minimized, or compensated could be identified. Several recent environmental analyses for license renewal applications have found that overall cumulative impacts in the region of influence of the power plant were significant (e.g., the Oyster Creek plant in New Jersey and the Susquehanna plant in Pennsylvania).

The following sections generically describe the potential impacting factors of past, present, and future actions that, together with the proposed action, could result in significant cumulative impacts. For the most part there would be no change to environmental conditions in the vicinity of nuclear power plants during the license renewal term beyond what is currently being experienced. Issues that could contribute to cumulative impacts are considered Category 2 issues and would require a plant-specific analysis as part of the license renewal review.

4.13.1 Land Use

Cumulative impacts on offsite land use typically result from the incompatibility of past, present, and reasonably foreseeable activities associated with many types of actions that occur in close proximity (e.g., urban development, industrial and commercial development, agricultural development, transportation development, and regional tourism and recreation). Because

communities manage growth and development through their land use control policies and regulations, these kinds of impacts are generally considered to be small. The magnitude of cumulative impacts resulting from all actions taking place within the region in which a power plant is located would depend on current land use patterns and proposed land use changes.

4.13.2 Visual Resources

Cumulative visual impacts result from an intrusion or perceptible contrast that affects the scenic quality of the landscape. Contrast results when there is a measurable difference between a structure and its surrounding landscape in terms of color, form (including scale), texture, or line. Visual impacts are related to activities (e.g., vegetation clearing and facility construction) and structures (e.g., houses, office buildings, and transmission lines) associated with urban sprawl and industrial and commercial development, and they tend to be higher in areas where structures are visible from a large area and therefore visible to a large number of people. The magnitude of cumulative impacts resulting from all actions taking place within the region in which a power plant is located would depend on the number of structures affecting the landscape, the degree of contrast, the degree of visibility (which, in turn, depends on the distance and angle from which the landscape is viewed), the value of the landscape, the number of viewers, the frequency and duration of views, and viewer perception of the impact level.

4.13.3 Air Quality

Cumulative impacts on air quality generally result from activities (e.g., earthmoving and vehicle traffic) associated with urban, industrial and commercial, agricultural, and transportation development. These activities give rise to dust, exhaust, and evaporative emissions that degrade air quality. The magnitude of cumulative impacts resulting from all actions taking place within the region in which a power plant is located would depend on the type (and intensity) of development within the airshed and its location relative to air quality nonattainment areas.

4.13.4 Noise

Noise levels in the vicinity of a power plant could result from activities (e.g., traffic) associated with urban development, industrial and commercial development, water projects, and transportation development. The magnitude of cumulative impacts resulting from these activities would depend on a plant's proximity to major urban centers, industrial complexes, and highways.

4.13.5 Geology and Soils

Cumulative impacts on geologic resources relate to issues concerning access to mineral or energy resources, destruction of unique geologic features, and mass movement induced by construction activities. These impacts typically result from land disturbance activities (e.g., earthmoving, blasting, grading, and excavation) associated with urban development, industrial and commercial development, water projects, and transportation development. Existing land use designations may also affect the access to mineral or energy resources. Impacts on soil resources relate to increases in the potential for soil erosion, which also occurs as a result of land disturbance activities. Vegetation clearing can increase the potential for soil erosion in the absence of soil erosion protection measures. The magnitude of cumulative impacts resulting from all actions taking place within the region in which a power plant is located would depend on the nature and location of the actions and whether appropriate mitigation measures are implemented to reduce the impacts.

4.13.6 Surface Water

Cumulative impacts on surface water resources relate to issues concerning water use and quality. Impacts typically result from activities (e.g., water withdrawal, effluent discharges, accidental spills) associated with urban development, industrial and commercial development, agricultural development, water projects (e.g., dredging), and grazing. Short-duration construction projects (e.g., vegetation clearing and road construction) can also result in surface water impacts if they increase soil erosion, which, in turn, increases sediment loading to nearby surface water bodies. The magnitude of cumulative impacts resulting from all actions taking place within the region in which a power plant is located would depend on the nature and location of the actions relative to surface water bodies, the number of actions (facilities or projects), and whether facilities comply with regulating agency requirements (e.g., permitted discharge limits).

Perhaps the most important source of surface water impacts is the withdrawal of water for plant cooling systems (both once-through and closed-cycle). These impacts relate to water use conflicts with other users. Although once-through systems return most of their withdrawn water (minus evaporative losses of less than 3 percent), surface water withdrawals for closed-cycle cooling systems can have significant impacts, because consumptive losses are much higher (up to 60 percent), resulting in the return of less water (Section 4.5). These impacts may be greater during times of drought, especially when temperatures are high.

4.13.7 Groundwater

Cumulative impacts on groundwater resources relate to issues concerning water use and quality. Impacts typically result from the water demands associated with urban, industrial and

commercial, and agricultural development. Short-duration construction projects could also result in groundwater impacts over time (e.g., from spills), unless best management practices (e.g., spill prevention and control plans and spill containment measures) are employed. The magnitude of cumulative impacts resulting from all actions taking place within the region in which a power plant is located would depend on the number of actions (facilities or projects) that draw water from the aquifer, the overall demand on the aquifer, the hydrogeologic characteristics of the aquifer, and whether facilities follow best management practices to protect groundwater resources from degradation and overpumping.

4.13.8 Ecology

Cumulative impacts on terrestrial habitats and wildlife include habitat loss and degradation, disturbance and displacement, injury and mortality, and obstruction of movement. Impacting factors include exposure to elevated noise levels and contaminants, altered surface water and groundwater quality and flow patterns, and hazards associated with direct contact with physical structures (e.g., bird collisions with buildings and other structures). Adverse impacts typically result from activities (e.g., construction) associated with urban sprawl, industrial and commercial development, agricultural development, transportation development, water projects, and regional tourism and recreation. Migratory species may be affected by activities carried out in locations remote from the nuclear plant sites. Plant communities (including floodplain and wetland communities) also may be affected by activities (e.g., clearing and grading) associated with these actions, creating conditions that favor the encroachment of invasive species. The magnitude of cumulative impacts resulting from all actions taking place within the region in which a power plant is located would depend on the nature and location of the actions relative to important wildlife habitats and plant communities, the number (and density) of actions, and the extent to which these actions (facilities or projects) employ mitigation measures to minimize such impacts.

Three scales of cumulative impacts on aquatic resources can be identified: (1) cumulative impacts due to the various impacts from an individual power plant (e.g., entrainment, impingement, thermal discharges, and chemical discharges), (2) cumulative impacts due to closely sited power plants, and (3) cumulative impacts due to multiple activities that affect the water body (e.g., dams, agriculture, urban, and industrial development) (York et al. 2005). Cumulative impacts on aquatic habitats and species include the (1) loss and degradation of habitat; (2) species disturbance, displacement, injury, and mortality; (3) obstruction of movement; and (4) the introduction and spread of invasive species. These impacts result from activities (e.g., increased water use and discharges to natural water bodies, increased and contaminated runoff) associated with urban sprawl; industrial, commercial, agricultural, and transportation development; water projects; and regional tourism and recreation. The magnitude of cumulative impacts resulting from all actions taking place within the region in which a power plant is located would depend on the nature and location of the actions relative

to important water bodies, the number (and density) of actions, and the extent to which these actions (facilities or projects) employ mitigation measures to minimize such impacts.

4.13.9 Historic and Cultural Resources

Cumulative impacts on historic and cultural resources relate to the damage or destruction of historic and cultural resources (i.e., archaeological sites, historic structures, and traditional cultural properties, or their context). These impacts typically result from land disturbance (e.g., earthmoving, blasting, grading, and excavation) or maintenance activities associated with urban, industrial and commercial, agricultural, and transportation development (e.g., vegetation clearing). Such activities may directly damage or destroy cultural artifacts or increase the potential for their exposure by accelerating erosion, leaving them vulnerable to theft and vandalism. The magnitude of cumulative impacts resulting from all actions taking place in the region where a power plant is located would depend on the nature and location of the actions and whether appropriate mitigation measures (in consultation with the SHPO) are implemented.

4.13.10 Socioeconomics

Cumulative impacts on the socioeconomic conditions in local communities relate to increases in employment and income, tax revenues, population and housing, community services and education, and transportation. These represent benefits that typically result from the economic activities associated with urban, industrial and commercial, agricultural, and transportation development and regional tourism and recreation. Significant employment and income are generated by various industries, including nuclear power plants. Expenditures associated with wages, salaries, and the procurement of materials and services create demand for a range of durable and nondurable goods, while wage and salary spending also increases demand for services and housing. Annual tax revenues to local and State government entities, primarily from property taxes, are also significant. These revenues, in turn, contribute to expenditures on local education, public safety, government services, and transportation, as well as employment and income in each host State. New industries increase the local population and the demand for housing and transportation networks. Adverse impacts include loss of jobs associated with changes in various industries, housing and other types of shortages associated with a rapid influx of workers to meet the demands of new projects, and changes in traffic patterns that could increase congestion on some transportation networks. The magnitude of cumulative impacts resulting from all actions taking place within the region in which a power plant is located would depend on the intensity of development in the area, the tax revenues generated, and the allocations of these revenues among local communities.

4.13.11 Human Health

Cumulative human health impacts relate to public exposure to radiological, chemical, and microbiological hazards and the potentially chronic effects of EMF exposure. Public exposures may occur as a result of environmental accumulations of harmful constituents released from various facilities associated with urban development, agriculture, and industrial and commercial development. The cumulative impacts of EMF exposure, while uncertain, would relate to activities (e.g., transmission lines and substations) associated with urban, industrial, and commercial development.

The magnitude of cumulative impacts resulting from all actions taking place within the region in which a power plant is located would depend on the nature and location of the actions, the number of actions (facilities or projects), the level of the public's exposure, and whether facilities comply with regulating agency requirements (e.g., permitted discharge limits).

4.13.12 Environmental Justice

Cumulative impacts can result when impacts on various individual resources (air, land, water, and ecology) combine to produce health and environmental impacts that are cumulatively high and adverse. Whether these impacts are disproportionately high and adverse to minority and low-income populations depends on the level of representation of these populations within the region. Sites that are close to metropolitan areas or that are located in rural areas in the south and southwest tend to have large minority and low-income populations. Adverse impacts from activities associated with urban sprawl and industrial, commercial, agricultural, and transportation development affect the resources on which these populations depend (e.g., fish, game animals, and native vegetation). The magnitude of cumulative impacts resulting from all actions taking place within the region in which a nuclear power plant is located would depend on the magnitudes of the impacts on various socioeconomic resources and the levels at which low-income and minority populations are represented within a region.

4.13.13 Waste Management and Pollution Prevention

Radioactive Waste – Spent fuel is currently stored at plant sites either in spent fuel pools or in aboveground ISFSIs until it can be shipped to a permanent repository (anticipated to be 2017 to 2020). Given the delays in the opening of the repository, however, it is likely that power plants would have to expand their spent fuel storage capacity beyond their original design. (The impacts of storage would be addressed under a general license or a specific license for the storage facility.) Waste volumes are projected to exceed the approved quantities of waste for Yucca Mountain by the early to mid 2010s; however, DOE's GNEP initiative, which could reduce waste quantities (decreasing the space requirement in the repository), is currently underway.

The magnitude of cumulative radiological impacts resulting from all actions taking place within the region in which a power plant is located would be small, because nuclear power plants are likely to be the only significant generators of radioactive waste within the region of concern and because onsite and offsite waste management activities already consider the cumulative effects at potential offsite disposal facilities. As a result, the cumulative impacts from radioactive waste management and pollution prevention would be equivalent to the impact from the overall incremental contribution of license renewal.

Other Wastes – The magnitude of cumulative impacts resulting from nonradioactive and mixed wastes resulting from all actions taking place within the region in which a power plant is located would be small, since waste-generating facilities must comply with Federal and State regulations in terms of storage, treatment, and disposal. In addition, facilities must employ procedures that ensure the proper handling and storage of wastes and monitoring for releases.

4.14 Resource Commitments Associated with the Proposed Action

This section addresses the resources that would be committed under the proposed action. In particular, it describes unavoidable adverse environmental impacts (Section 4.14.1), the relationship between short-term uses of the environment and the maintenance and enhancement of long-term productivity (Section 4.14.2), and the irreversible and irretrievable commitment of resources (Section 4.14.3) that would be associated with the proposed action. Potential unavoidable adverse environmental impacts and irreversible and irretrievable resource commitments that would be associated with alternatives to the proposed action are also discussed.

4.14.1 Unavoidable Adverse Environmental Impacts

Unavoidable adverse environmental impacts are impacts that would occur after implementation of all feasible mitigation measures. Continued nuclear plant operations and the implementation of any of the energy alternatives considered in this GEIS would result in some unavoidable adverse environmental impacts.

The impacts of continued nuclear plant operations that are anticipated to occur are discussed for each resource area in Sections 4.1 through 4.11. Some of these impacts cannot be avoided because they are inherently associated with nuclear plant operations and cannot be fully mitigated. Minor unavoidable adverse impacts on air quality would occur due to emission and release of various chemical and radiological constituents into the environment from plant

operations. Nonradiological emissions are expected to comply with EPA emissions standards, though the alternative of operating a fossil-fueled power plant in some areas may worsen existing air quality attainment issues. Chemical and radiological emissions would not exceed the National Emission Standards for Hazardous Air Pollutants. Other unavoidable adverse impacts (depending on the plant) include the impact on land use and visual resources, some minor noise effects, surface water and groundwater use, thermal effluents emitted to the environment from the power conversion equipment, and entrainment and impingement of aquatic organisms in the cooling water system.

During nuclear power plant operations, workers and members of the public would face unavoidable exposure to radiation and hazardous and toxic chemicals. Workers would be exposed to radiation and chemicals associated with routine plant operations and the handling of nuclear fuel and waste material. Workers would have a higher risk of exposure than members of the public, but doses would be administratively controlled and would not exceed any standards or administrative control limits. Construction and operation of alternative energy generating facilities would also result in unavoidable exposure to hazardous and toxic chemicals to workers and the general public.

Also unavoidable would be the generation of spent nuclear fuel and waste material, including LLW, hazardous waste, and nonhazardous waste. Hazardous and nonhazardous wastes would also be generated at non-nuclear power generating facilities. Wastes generated during plant operations would be collected, stored, and shipped for suitable treatment, recycling, or disposal in accordance with applicable Federal and State regulations. Due to the costs of handling these materials, power plant operators would be expected to conduct all activities and optimize all operations in a way that generates the smallest amount of waste practical. Although pollution prevention and waste minimization efforts are intended to prevent emissions to the environment and prevent and/or minimize the quantities of waste generated, some waste and emissions cannot be entirely eliminated due to current technology.

Many of these unavoidable impacts are being mitigated by incorporating safety features and/or applying operational procedures at the plants and are monitored by the plant owners and State agencies. Thermal, entrainment, and impingement impacts at plants with once-through cooling water systems are unavoidable. However, these impacts could be reduced by modifying the once-through cooling system, or by converting to a closed-cycle cooling system. Although closed-cycle cooling water systems can reduce thermal, entrainment, and impingement impacts, they increase water consumption (through cooling tower evaporation), fogging, icing, and salt drift.

Nuclear plants being considered for license renewal already exist and have been operating for decades. The environmental impacts considered for license renewal are those associated with continued plant operation and refurbishment. Alternatives to license renewal involve major

construction impacts. Unavoidable adverse impacts of the energy alternatives if the nuclear plants ceased operation at or before the expiration of current operating licenses may not be smaller and could be greater than those associated with the continued operation of existing plants.

Unavoidable adverse impacts would vary among plants and would depend on the specific characteristics of each plant and its interaction with the environment. These unavoidable adverse impacts would need to be evaluated in plant-specific SEISs.

4.14.2 Relationship Between Short-Term Use of the Environment and Long-Term Productivity

The operation of power generating facilities would result in short-term uses of the environment as described earlier in this Chapter. “Short term” is the period of time during which continued power generating activities would take place.

Power plant operations would necessitate short-term use of the environment and commitments of resources, and would also commit certain resources (e.g., land and energy) indefinitely or permanently. Certain short-term resource commitments would be substantially greater under most energy alternatives, including license renewal, than under the No-Action Alternative due to the continued generation of electrical power as well as continued use of generating sites and associated infrastructure. During operations, all energy alternatives would entail similar relationships between local short-term uses of the environment and the maintenance and enhancement of long term productivity.

Short-term use of the environment can affect long-term productivity of the ecosystem if that use alters the ability of the ecosystem to reestablish an equilibrium that is comparable to that of its original condition. An initial commitment regarding the trade-off between short-term use and long-term productivity at the nuclear power plant sites was made when the plants were first constructed decades ago. Renewal of the operating licenses and the continued operation of the plants would not alter any existing effects on long-term productivity, but they might postpone the availability of the sites at which the plants are located for other uses. The No Action Alternative would lead to a cessation of operations and shutdown of the plants (an eventuality regardless of current license renewal decisions).

Air emissions from power plant operations would introduce small amounts of radiological and nonradiological constituents to the region around the plant site. Over time, these emissions could result in increased concentrations and exposure, but are not expected to impact air quality or radiation exposure to the extent that public health and long-term productivity of the environment would be impaired.

Continued employment, expenditures, and tax revenues generated during power plant operations would directly benefit local, regional, and state economies over the short term. Local governments investing project-generated tax revenues into infrastructure and other required services could enhance economic productivity over the long term.

The management and disposal of spent nuclear fuel, LLW, hazardous waste, and nonhazardous waste would require an increase in energy and would consume space at treatment, storage, or disposal facilities. Regardless of the location, the use of land to meet waste disposal needs would reduce the long-term productivity of the land.

Power plant facilities would be committed to electricity production over the short term. After decommissioning these facilities and restoring the area the land could be available for other future productive uses.

The nature of the relationship between short-term use of the environment and long-term productivity would vary among plants and would depend on the specific characteristics of each plant and its interaction with the environment. This relationship would need to be evaluated in plant-specific SEISs.

4.14.3 Irreversible and Irretrievable Commitment of Resources

Irreversible and irretrievable commitment of resources for electrical power generation would include the commitment of land, water, energy, raw materials, and other natural and manmade resources required for power plant operations during the license renewal term and any refurbishment activities that might be carried out that would not otherwise have taken place if the operating licenses had not been renewed. This section describes the irreversible and irretrievable commitments of resources that have been identified in this GEIS. A commitment of resources is irreversible when primary or secondary impacts limit the future options for a resource. An irretrievable commitment refers to the use or consumption of resources neither renewable nor recoverable for future use. In general, the commitment of capital, energy, labor, and material resources would also be irreversible.

Resources include materials and equipment required for plant maintenance and operation, energy and water needed to run the plants, the nuclear fuel used by the reactors to generate electricity, and the land required to permanently dispose of the radioactive and nonradioactive wastes. Some of these resources can be retrieved and reused at the end of the license renewal term. For example, some reactor equipment can be used at other reactors or can be decontaminated and released for recycling or restricted or unrestricted use by others. However, some of the equipment and irradiated components that might be replaced during the license renewal term might not be reused or recycled and therefore need to be permanently disposed of. In addition, the fossil fuels used by the plants would be permanently lost. Most of

the water used by the plants relying on once-through cooling is returned to the surface water bodies that supply the cooling water. The relatively small portion of the water that evaporates to the air would be lost to the local water bodies and the region but would be returned to the environment as part of the hydrologic cycle, potentially within another watershed. For closed-cycle cooling systems, a much larger percent of the water used for cooling would be lost to evaporation, but that, too, would be returned as part of the hydrologic cycle.

The most significant irreversible and irretrievable commitment of resources related to nuclear power plant operations during the license renewal term would be the nuclear fuel used to generate electricity and the land used to dispose of wastes, including spent nuclear fuel generated during the license renewal term. The treatment, storage, and disposal of spent nuclear fuel, LLW, hazardous waste, and nonhazardous waste would require the irretrievable commitment of energy and fuel and could result in the irreversible commitment of space in disposal facilities. Some of the land used for the disposal of LLW may be available for other uses in a few hundred years because of the nearly complete decay of short-lived radionuclides in LLW, but most of the land used for the disposal of spent nuclear fuel or some mixed or hazardous wastes could be permanently lost to other users.

The irreversible and irretrievable commitment of resources would not be the same for all plants and would depend on the specific characteristics of plants and their resource needs. This commitment would need to be evaluated in plant-specific SEISs.

The implementation of any of the energy alternatives would entail the irreversible and irretrievable commitment of energy, water, chemicals, and, in some cases, fossil fuels. These resources would be committed over the entire life cycle of the power plant from construction, operation, and decommissioning, and would essentially be unrecoverable.

Energy expended would be in the form of fuel for equipment, vehicles, and power plant operations and electricity for power plant construction and facility operations. Electricity and fuels would be purchased from offsite commercial sources. Water would be obtained from existing water supply systems. These resources are generally available, and the amounts required are not expected to deplete available supplies or exceed available system capacities.

The irreversible and irretrievable commitment of material resources are the materials that cannot be recovered or recycled, materials that are rendered radioactive and/or cannot be decontaminated, and materials consumed or reduced to unrecoverable forms of waste. However, none of the resources used by these alternative power generating facilities is in short supply, and, for the most part, readily available.

Various materials and chemicals, including acids and caustics, would be required to support operations activities. These materials would be derived from commercial vendors, and their consumption is not expected to affect local, regional, or national supplies.

4.15 References

10 CFR Part 20. *Code of Federal Regulations*, Title 10, *Energy*, Part 20, "Standards for Protection Against Radiation."

10 CFR Part 50. *Code of Federal Regulations*, Title 10, *Energy*, Part 50, "Domestic Licensing of Production and Utilization Facilities."

10 CFR Part 51. *Code of Federal Regulations*, Title 10, *Energy,* Part 51, "Environmental Protection Regulations for Domestic Licensing and Related Regulatory Functions."

10 CFR Part 52. *Code of Federal Regulations,* Title 10, *Energy*, Part 52, "Early Site Permits; Standard Design Certifications; and Combined Licenses for Nuclear Power Plants."

10 CFR Part 54. *Code of Federal Regulations*, Title 10, *Energy,* Part 54, "Requirements for Renewal of Operating Licenses for Nuclear Power Plants."

10 CFR Part 63. *Code of Federal Regulations*, Title 10, *Energy,* Part 63, "Disposal of High-Level Radioactive Wastes in a Geologic Repository at Yucca Mountain, Nevada."

10 CFR Part 72. *Code of Federal Regulations*, Title 10, *Energy*, Part 72, "Licensing Requirements for the Independent Storage of Spent Nuclear Fuel, High-Level Radioactive Waste, and Reactor-Related Greater Than Class C Waste."

40 CFR Part 125. *Code of Federal Regulations*, Title 40, *Protection of the Environment*, Part 125, "Criteria and Standards for the National Pollutant Discharge Elimination System."

40 CFR Part 190. *Code of Federal Regulations*, Title 40, *Protection of Environment*, Part 190, "Environmental Radiation Protection Standards for Nuclear Power Operations."

40 CFR Part 191. *Code of Federal Regulations*, Title 40, *Protection of Environment*, Part 191, "Environmental Radiation Protection Standards for Management and Disposal of Spent Nuclear Fuel, High-Level and Transuranic Radioactive Waste."

40 CFR Part 197. *Code of Federal Regulations*, Title 40, *Protection of Environment*, Part 197, "Public Health and Environmental Radiation Protection Standards for Management and Disposal for Yucca Mountain, Nevada."

40 CFR Part 1508. *Code of Federal Regulations*, Title 40, *Protection of the Environment*, Part 1508, "Terminology and Index."

Able, K.P. 1973. "The Changing Seasons." *American Birds* 27:19–23.

Ahier, B.A., and B.L. Tracy. 1995. "Radionuclides in the Great Lake Basin." *Environmental Health Perspectives* 103:89–101.

Aldrich, T.E., and C.E. Easterly. 1987. "Electromagnetic Fields and Public Health." *Environmental Health Perspectives* 75:159–171.

Algers, B., and J. Hultgren. 1987. "Effects of Long-Term Exposure to a 400-kV, 50-Hz Transmission Line on Estrous and Fertility in Cows." *Preventive Veterinary Medicine* 5:21–36.

Allen, E., D. Bucaneg, N. Davis, J. Diamond, M. Layton, J. Klein, N. Nelson, M. Trask, D. Vidaver, and R. York. 2004. *Resource, Reliability and Environmental Concerns of Aging Power Plant Operations and Retirements*. Draft Staff White Paper 100-04-005D, California Energy Commission, Sacramento, California. (August). Available URL: http://www.energy.ca.gov/2004_policy_update/documents/2004-08-26_workshop/2004-08-04_100-04-005D.pdf (Accessed December 14, 2007).

Alverson, W.S., D.M. Waller, and S.L. Solheim. 1988. "Forests to Deer: Edge Effects in Northern Wisconsin." *Conservation Biology* 2:348–358.

Amstutz, H.E., and D.B. Miller. 1980. "A Study of Farm Animals near 765-kV Transmission Lines." *Bovine Practitioner* 15:51–62.

Atomic Energy Act of 1954, as amended. 42 USC 2011 et seq.

Bamber, R.N., and R.M.H. Seaby. 2004. "The Effects of Power Station Entrainment Passage on Three Species of Marine Planktonic Crustacean, *Acartia tonsa* (Copepoda), *Crangon crangon* (Decapoda) and *Homarus gammarus* (Decapoda)." *Marine Environmental Research* 57:281–294.

Bankoske, J.W., et al. 1976. "The Effects of High-Voltage Electric Fields on the Growth and Development of Plants and Animals." Pp. 112–23 in R. E. Tillman, ed., *Proceedings of the First*

National Symposium on Environmental Concerns in Rights-of-Way Management, *January 6–8, 1976*. Mississippi State University, Mississippi State, Mississippi.

Banks, R.C. 1979. *Human Related Mortality of Birds in the United States*. U.S. Fish and Wildlife Service Special Scientific Report 215, pp. 1–16.

Barkley, S.W., and C. Perrin. 1971. "The Effects of the Lake Catherine Steam Electric Plant Effluent on the Distribution of Fishes in the Receiving Embayment." Pages 384–92 in *Proceedings of the Twenty-Fifth Annual Conference of the Southeastern Association of Game and Fish Commissioners*, Columbia, South Carolina.

Beitinger, T.L., W.A. Bennett, and R.W. McCauley. 2000. "Temperature Tolerances of North American Freshwater Fishes Exposed to Dynamic Changes in Temperature." *Environmental Biology of Fishes* 58:237–275.

Bell, J.N.B., M.J. Minski, and H.A. Grogan. 1988. "Plant Uptake of Radionuclides." *Soil Use and Management* 4(3):76–84.

Beresford, N.A., S.M. Wright, C.L. Barnett, M.D. Wood, S. Gaschak, A. Arkhipov, T.G. Sazykina, and B.J. Howard. 2005. "Predicting Radionuclide Transfer to Wild Animals: An Application of a Proposed Environmental Assessment Framework to the Chernobyl Exclusion Zone." *Radiation and Environmental Biophysics* 44:161–168.

Bevanger, K. 1988. "Biological and Conservation Aspects of Bird Mortality Caused by Electricity Power Lines: A Review." *Biological Conservation*, Vol. 86, pp. 67–76.

Blaylock, B.G., M.L. Frank, and B.R. O'Neal. 1993. *Methodology for Estimating Radiation Dose Rates to Freshwater Biota Exposed to Radionuclides in the Environment*. ES/ER/TM-78, Oak Ridge National Laboratory, Tennessee. (September).

Bindokas, V. P., et al. 1988. "Mechanisms of Biological Effects Observed in Honey Bees (*Apis mellifera, L.*) Hived Under Extra-High-Voltage Transmission Lines: Implications Derived from Bee Exposure to Simulated Intense Electric Fields and Shocks." *Bioelectromagnetics*, 9(3), 285–301.

Blue, R. 1996. "Documentation of Raptor Nests on Electric Utility Facilities Through a Mail Survey." Pages 87–95 in D.M. Bird, D.E. Varland, and J.J. Negro (eds.). *Raptors in Human Landscapes: Adaptations to Built and Cultivated Environments*. Academic Press, Inc., San Diego, California.

Bodensteiner, L.R., and W.M. Lewis. 1992. "Role of Temperature, Dissolved Oxygen, and Backwaters in the Winter Survival of Freshwater Drum (*Aplodinotus grunniens*) in the Mississippi River." *Canadian Journal of Fisheries and Aquatic Sciences* 49:173–184.

Bodensteiner, L.R., and W.M. Lewis. 1994. "Downstream Drift of Fishes in the Upper Mississippi River During Winter." *Journal of Freshwater Ecology* 9(1):45–56.

Bonneville Power Administration (BPA). 2000. *Transmission System Vegetation Management Program Final Environmental Impact Statement*. DOE/EIS-0285, U.S. Department of Energy, Portland, Oregon, May.

Boorman, G.A., C.N. Rafferty, J.M. Ward, and R.C. Sills. 2000. "Leukemia and Lymphoma Incidence in Rodents Exposed to Low-Frequency Magnetic Fields." *Radiation Research* 153:627–636.

Bracken, T.C., and A.L. Gabriel. 1981. *Lyons Ozone Instrumentation Program and Data Analysis*. Laboratory Report No. EL-81-3, Bonneville Power Administration, Portland, Oregon.

Bramble, W.C., R.H. Yahner, and W.R. Byrnes. 1999. "Effect of Herbicide Maintenance of an Electric Transmission Line Right-of-Way on Butterfly Populations." *Journal of Arboriculture* 25:302–310.

Brown, J., S.R. Jones, R. Saxén, H. Thørring, and J. Vives I Batlle. 2004. "Radiation Doses to Aquatic Organisms from Natural Radionuclides." *Journal of Radiological Protection* 24:A63–A77.

Byus, C.V., S.E. Pieper, and W.R. Adey. 1987. "The Effects of Low-Energy 60-Hz Environmental Electromagnetic Field upon the Growth-Related Enzyme Ornithine Decarboxylase." *Carcinogenesis* 8:1385–1389.

Cada, G.F. et al. 1981. *Effects of Sublethal Entrainment Stresses on the Vulnerability of Juvenile Bluegill Sunfish to Predation*. ORNL/TM-7801, Oak Ridge National Laboratory, Oak Ridge, Tennessee.

Cahill, D.F., J.F. Wright, J.H. Godbold, J.M. Ward, J.W. Laskey, and E.A. Tompkins. 1975. "Neoplastic and Life-Span Effects of Chronic Exposure to Tritium. 1. Effects on Adult Rats Exposed During Pregnancy. *Journal of the National Cancer Institute* 55:371–374.

Cairns, J., Jr. 1990. "Lack of Theoretical Basis for Predicting Rate and Pathways of Recovery." *Environmental Management* 14:517–526.

California Department of Health Services (CADHS). 2002. *An Evaluation of the Possible Risks from Electric and Magnetic Field (EMF) from Power Lines, Internal Wiring, Electrical Occupations and Appliances*. California EMF Program. Available URL: www.dhs.ca.gov/ehib/emf/RiskEvaluation/riskeval.html (Accessed September 19, 2007).

Canfield, J.E. 1988. *Impact Mitigation and Monitoring of the BPA 500-kV Garrison-Taft Transmission Line – Effects on Elk Security and Hunter Opportunity: Final Report prepared for Bonneville Power Administration*, DOE/BP-1136, Montana Department of Fish, Wildlife and Parks, Helena, Montana.

Carlton, B.D., P. Barlett, A. Basaran, K. Colling, I. Osis, and M.K. Smith. 1986. "Reproductive Effects of Alternative Disinfectants." *Environmental Health Perspectives* 69: 237–241.

Carpenter, E.J., B.B. Peck, and S.J. Anderson. 1974. "Survival of Copepods Passing through a Nuclear Power Station on Northeastern Long Island Sound, USA." *Marine Biology* 24:49–55.

Clean Air Act of 1970, as amended. 42 USC 7401 et seq.

Clean Water Act (CWA). 33 USC 1251 et seq.

Coastal Zone Management Act of 1972 (CZMA), as amended. 16 USC 1451, et seq.

Constellation Energy Group (CEG). 2003. *Annual Radiological Environmental Operating Report for the Calvert Cliffs Nuclear Power Plant Units 1 and 2 and the Independent Spent Fuel Storage Installation*. Lusby, Maryland.

Constellation Energy Group (CEG). 2004. *Nine Mile Point Nuclear Station Units 1 and 2 2004 Annual Radiological Environmental Operating Report*. Docket Nos. 50-220, 50-410. Lycoming, New York.

Consumers Energy Company and Nuclear Management Company, LLC. 2001. *Palisades Nuclear Plant Biological Assessment of the 1999 Cooling Water Flow Increase at the Palisades Plant, near South Haven, Michigan*. Consumers Energy Company, Jackson, Michigan, and Nuclear Management Company, LLC, Covert, Michigan. (May).

Council on Environmental Quality (CEQ). 1997. *Considering Cumulative Effects Under the National Environmental Policy Act*. (January).

Coutant, C.C. 1981. *A Critical Review of Aquatic Ecological Effects of Power Plant Cooling*. U.S. Department of Energy, Office of Health and Environmental Research, Washington, D.C.

Coutant, C.C. 1987. "Thermal Preference: When Does an Asset Become a Liability?" *Environmental Biology of Fishes* 18(3):161–72.

Crawford, R.L., and R.T. Engstrom. 2001. Characteristics of Avian Mortality at a North Florida Television Tower: A 29-Year Study. *Journal of Field Ornithology* 72:380–388.

Crooks, K.R. 2002. "Relative Sensitivities of Mammalian Carnivores to Habitat Fragmentation." *Conservation Biology* 16:488–502.

Crooks, K.R., and M.E. Soulé. 1999. "Mesopredator Release and Avifaunal Extinctions in a Fragmented System." *Nature* 400:563–566.

Diaz, R.J. 1994. "Response of Tidal Freshwater Macrobenthos to Sediment Disturbance." *Hydrobiologia* 278:201–212.

Dominion Nuclear Connecticut (DNC). 2004. *Millstone Power Station Units 1, 2, and 3 2004 Annual Radiological Environmental Operating Report*. Docket Nos. 50-245, 50-336, 50-423. Waterford, Connecticut.

Draper, G., T. Vincent, M.E. Kroll, and J. Swanson. 2005. "Childhood Cancer in Relation to Distance from High Voltage Power Lines in England and Wales: A Case-Control Study." *BMJ* Vol. 330. (June 4). Available URL: http://bmj.com.cgi/content/full/330/7503/1290. (Accessed September 2007).

Dunning, D.J., Q.E. Ross, P. Geoghegan, J.J. Reichle, J.K. Menezes, and J.K. Watson. 1992. "Alewives Avoid High-Frequency Sound." *North American Journal of Fisheries Management* 12:407–416.

Easterly, C.E. 1981. "Cancer Link to Magnetic Fields: A Hypothesis." *American Journal of Epidemiology* 114(2):169–173.

Eisler, R. 1994. *Radiation Hazards to Fish, Wildlife, and Invertebrates: A Syntopic Review*. Biological Report 26. U.S. Department of the Interior, National Biological Service, Washington, D.C.

Endangered Species Act of 1973 (ESA). 16 USC 1531–1544.

Energy Northwest. 2005. *Columbia Generating Station 2005 Annual Radiological Environmental Operating Report*. Richland, Virginia.

Energy Policy Act of 2005. P.L. 109-058, August 8, 2005.

Entergy. 2003. *Vermont Yankee Nuclear Power Station 2003 Annual Radiological Environmental Operating Report*. Docket No. 50-271. Brattleboro, Vermont.

Entergy. 2006a. *Arkansas Nuclear One – Units 1 and 2 Annual Radiological Environmental Operating Report for 2006*. Russellville, Arkansas.

Entergy. 2006b. *Indian Point Nuclear Power Plants Units 1, 2, and 3 Annual Radiological Environmental Operating Report for 2006*. Docket Nos. 50-3, 50-247, 50-286. Buchanan, New York.

Environmental Incorporated Midwest Laboratory (EIML). 2005. *Radiological Environmental Monitoring Program (REMP) for the Point Beach Nuclear Power Plant*. Project No. 8006, Two Rivers, Wisconsin.

Erickson, W.P., G.D. Johnson, M.D. Strickland, K.J. Sernka, and R.E. Good. 2001. *Avian Collisions with Wind Turbines: A Summary of Existing Studies and Comparisons to Other Sources of Avian Collision Mortality in the United States*. National Wind Coordinating Committee Resource Document, Western EcoSystems Technology, Inc., Cheyenne, Wyoming. (August).

European Committee on Radiation Risk (ECRR). 2003. *Recommendations of the European Committee on Radiation Risk, Health Effects of Ionising Radiation Exposure at Low Doses for Radiation Protection Purposes*. Brussels, Belgium.

Evans, D.R., and J.E. Gates. 1997. "Cowbird Selection of Breeding Areas: The Role of Habitat and Bird Species Abundance." *Wilson Bulletin* 109:470–480.

Evans, M.S., G.J. Warren, and D.I. Page. 1986. "The Effects of Power Plant Passage on Zooplankton Mortalities: Eight Years of Study at the Donald C. Cook Nuclear Plant." *Water Research* 20(6):725–734.

Exelon Generating Company, LLC (Exelon). 2003. *Applicant's Environmental Report – Operating License Renewal Stage, Dresden Nuclear Power Station, Units 2 and 3*. Docket Nos. 50-237 and 50-249, Warrenville, Illinois. (January).

Exelon Generation Company, LLC (Exelon). 2001. *Applicant's Environmental Report – Operating License Renewal Stage Peach Bottom Units 2 and 3*. Kennett Square, Pennsylvania.

Fairbanks, R.B., and R.P Lawton. 1977. "Occurrence of Large Striped Mullet, *Mugil cephalus*, in Cape Cod Bay, Massachusetts." *Chesapeake Science* 18:309–310.

Federal Communications Commission (FCC). 2003. "Effects of Communication Towers on Migratory Birds." *Federal Register* 68:53696–53702.

Federal Insecticide, Fungicide, and Rodenticide Act, as amended (FIFRA). 7 USC 135 et seq.

Florida Power & Light Company (FPL). 2000. *Applicant's Environmental Report – Operating License Renewal Stage Turkey Point Units 3 and 4*. Miami, Florida.

Fox, J.L., and M.S. Moyer. 1973. "Some Effects of a Power Plant on Marine Microbiota." *Chesapeake Science* 14(1):1–10.

Gibbs, J.P. 1998. "Distribution of Woodland Amphibians Along a Forest Fragmentation Gradient." *Landscape Ecology* 13:263–268.

Gilmer, D.S., and R.E. Stewart. 1983. "Ferruginous Hawk Populations and Habitat Use in North Dakota." *Journal of Wildlife Management* 47:146–57.

Goodman, R., and A.S. Henderson. 1986. "Sine Waves Enhance Cellular Transcription." *Bioelectromagnetics* 7(1):23–29.

Goodman, R., and A.S. Henderson. 1988. "Exposure of Salivary Gland Cells to Low-Frequency Electromagnetic Fields Alters Polypeptide Synthesis." *Proceedings of the National Academy Science* 85:3928–3932.

Goodman, R., J. Abbott, and A.S. Henderson. 1987. "Transcriptional Patterns in the X Chromosome of *Sciara coprophilia* Following Exposure to Magnetic Fields." *Bioelectromagnetics* 8(1):1–7.

Gray, R.H., T.L. Page, and M.G. Saroglia. 1983. "Behavioral Response of Carp, *Cyprinus carpio*, and Black Bullhead, *Ictalurus melas*, from Italy to Gas Supersaturated Water." *Environmental Biology of Fishes* 8:163–167.

Greenberg, B. et al. 1985. *Extra-High Voltage Transmission Lines: Mechanisms of Biological Effects on Honeybees*. EPRI EA-4218, Electric Power Research Institute, Palo Alto, California.

Guerra-García, J.M., J. Corzo, and J. García-Gomez. 2003. "Short-Term Benthic Recolonization after Dredging in the Harbour of Ceuta, North Africa." *Marine Ecology* 24:217–229.

Gunter, L., P. Gunter, S. Cullen, and N. Burton. 2001. *Licensed to Kill: How the Nuclear Power Industry Destroys Endangered Marine Wildlife and Ocean Habitat to Save Money*. Prepared by Safe Energy Communication Council, Washington, D.C.; Nuclear Information and Resource Service, Washington, D.C.; Standing for Truth About Radiation, East Hampton, New York; and Humane Society of the United States, Washington, D.C.

Hall, C.A.S., R. Howarth, B. Moore, III, and C.J. Vorosmarty. 1978. "Environmental Impacts of Industrial Energy Systems in the Coastal Zone," *Annual Review of Energy* 3:395-475.

Hallenbeck, W.H., and G.R. Brenniman. 1989. "Risk of Fatal Amoebic Meningoencephalitis from Waterborne *Naegleria fowleri*." *Environmental Management* 13(2):227–232.

Harness, R.E., and K.R. Wilson. 2001. Electric-Utility Structures Associated with Raptor Electrocutions in Rural Areas." *Wildlife Society Bulletin* 29:612–623.

Harrison, F.L. 1985. "Effect of Physiochemical Form on Copper Availability to Aquatic Organisms." In R.D. Cardwell et al., eds., *Seventh Symposium on Aquatic Toxicology and Hazard Assessment*. ASTM STP 854. American Society for Testing and Materials, Philadelphia, Pennsylvania.

Harvard Center for Cancer Prevention (HCCP). 2007. *Electromagnetic Fields*. Available URL: http://www.hsph.harvard.edu/cancer/resources_materials/reports/HCCPreport_1electro.htm (Accessed October 10, 2007).

Haynes, J.M., and J.C. Makarewicz. 1982. "Comparison of Benthic Communities in Dredged and Undredged Areas of the St. Lawrence River, Cape Vincent, N.Y." *Ohio Journal of Science* 82:165–170.

Henderson, P.A. and R.M.H. Seaby. 2000. *Technical Evaluation of U.S. Environmental Protection Agency Proposed Cooling Water Intake Regulations for New Facilities*. Pices Conservation Ltd., Lymington, England.

Henderson, P.A., R.M.H. Seaby, and J.R. Somes. 2003. *A Comparison of Ecological Impacts of Power Plant Once-through, Evaporative and Dry Cooling Systems on Fish Impingement and Entrainment*. Pisces Conservation Ltd., Lymington, England. (May). Available URL: http://www.riverkeeper.org/document.php/135/Appendix_B_Pis.pdf (Accessed November 27, 2007).

Hinton, T.G., M. McDonald, Y. Ivanov, N. Arkhipov, and A. Arkhipov. 1996. "Foliar Absorption of Resuspended ^{137}Cs Relative to Other Pathways of Plant Contamination." *Journal of Environmental Radioactivity* 30(4):15–30.

Hinton, T.G., C.M. Bell, F.W. Whicker, and T. Philippi. 1999. "Temporal Changes and Factors Influencing 137Cs Concentration in Vegetation Colonizing an Exposed Lake Bed over a Three-Year Period." *Journal of Environmental Radioactivity* 44:1–19.

Hitchcock, D.R., C.D. Barton, K.T. Rebel, J. Singer, J.C. Seaman, J.D. Strawbridge, S.J. Riha, and J.I. Blake. 2005. "A Containment and Disposition Strategy for Tritium-Contaminated Groundwater at the Savannah River Site, South Carolina, United States." *Environmental Geosciences* 12(1):17–28.

Indiana Michigan Power (IMP). 2006. *Donald C. Cook Nuclear Plant Units 1 and 2 Annual Radiological Environmental Operating Report for 2006*. Docket Nos. 50-315, 50-316. Bridgman, Michigan.

Institute of Electrical and Electronic Engineers, Inc. (IEEE). 2007. *National Electrical Safety Code*. New York, New York.

International Agency for Research on Cancer. (IARC). 2002. "Non-Ionizing Radiation, Part 1: Static and Extremely Low Frequency (ELF) Electric and Magnetic Field." *IARC Monographs on the Evaluation of Carcinogenic Risks to Humans* 80:1–429.

International Atomic Energy Agency (IAEA). 1992. *Effects of Ionizing Radiation on Plants and Animals at Levels Implied by Current Radiation Protection Standards*. Technical Report No. 332. Vienna, Austria.

International Radiation Protection Association/International Non-Ionizing Radiation Commission (IRPA/INIRC). 1990. "Interim Guidelines on Limits of Exposure to 50/60 Hz Electric and Magnetic Fields." *Health Physics* 58(1):113–1122.

Janes, D.E. 1980. *Evaluation of Health and Environmental Effects of Extra-High-Voltage (EHV) Transmission*. U.S. Environmental Protection Agency, Office of Radiation Programs.

Janss, G.F.E. 2000. "Avian Mortality from Power Lines: A Morphological Approach of Species-Specific Mortality." *Biological Conservation* 95:353–359.

Jinks, S. 2005. *A Review of Impingement Survival Studies at Steam-Electric Power Stations.* Pages 219–241 in EPA 625-C-05-002, Proceedings Report Symposium on Cooling Water Intake Technologies to Protect Aquatic Organisms, Hilton Crystal City at National Airport, Arlington, Virginia, May 6-76, 2003, Available URL: http://www.epa.gov/waterscience/316b/meetings/symposium/proceedings.pdf (Accessed August 8, 2007).

Johnson, W.C., R.K. Schreiber, and R.L. Burgess. 1979. "Diversity of Small Mammals in a Powerline Right-of-Way and Adjacent Forest in East Tennessee." *American Midland Naturalist* 101:231–235.

Joint Resolution Approving the Site at Yucca Mountain, Nevada, for the Development of a Repository for the Disposal of High-Level Radioactive Waste and Spent Nuclear Fuel, pursuant to the Nuclear Waste Policy Act of 1982. 2002. Public Law 107-200. 116 Stat. 735.

Kaplan, D.I., T.G. Hinton, and A.S. Knox. 2005. "Cesium-137 Partitioning to Wetland Sediments and Uptake by Plants." *Journal of Radioanalytical and Nuclear Chemistry* 264(2):393–399.

Kaplan, E.H., J.R. Welker, M.G. Kraus, and S. McCourt. 1975. "Some Factors Affecting the Colonization of a Dredged Channel." *Marine Biology* 32:193–204.

Kelsey-Wall, A., J.C. Seaman, C.H. Jagoe, C.E. Dallas, K.F. Gaines. 2005. "Rodents as Receptor Species at a Tritium Disposal Site." *Journal of Environmental Radioactivity* 82:95–104.

Kelso, J.R., and G.S. Milburn. 1979. "Entrainment and Impingement of Fish by Power Plants in the Great Lakes Which Use the Once-Through Cooling Process." *Journal of Great Lakes Research* 5(2):182–194.

Kemper, C. 1996. "A Study of Bird Mortality at a West Central Wisconsin TV Tower from 1957–1995." *The Passenger Pigeon* 58:219–235.

Kennish, M.J. et al. 1984. "Anthropogenic Effects on Aquatic Communities." Pages 318–38 in M.J. Kennish and R.A. Lutz, eds., *Ecology of Barnegat Bay, New Jersey*, Springer-Verlag, New York.

Kheifets, L., M. Repacholi, R. Saunders, and E. van Deventer. 2005. "The Sensitivity of Children to Electromagnetic Fields." *Pediatrics* 116(2). (August). Available URL: www.pediatrics.org (Accessed September 20, 2007).

King, D.I., and B.E. Byers. 2002. "An Evaluation of Powerline Rights-of-Way as Habitat for Early Successional Shrubland Birds." *Wildlife Society Bulletin* 30:868–874.

Klem, D., Jr. 1990. "Bird Injuries, Cause of Death, and Recuperation from Collisions with Windows." *Journal of Field Ornithology* 61:115–119.

Kroodsma, R.L. 1984. "Effects of Power-Line Corridors on the Density and Diversity of Bird Communities in Forested Areas." Pages 551–61 in A.F. Crabtree, ed., *Proceedings of the Third International Symposium on Environmental Concerns in Rights-of-Way Management, San Diego, California, February 15–18, 1982*. Mississippi State University, Mississippi State, Mississippi.

Kroodsma, R.L. 1987. "Edge Effect on Breeding Birds Along Power-Line Corridors in East Tennessee." *American Midland Naturalist* 118:275–83.

Kryshev, I.I., and T.G. Sazykina. 1998. "Radioecological Effects on Aquatic Organisms in the Areas with High Levels of Radioactive Contamination: Environmental Protection Criteria." *Radiation Protection Dosimetry* 75:187–191.

Laist, D.W., and J.E. Reynolds, III. 2005. "Influence of Power Plants and Other Warm-Water Refuges on Florida Manatees." *Marine Mammal Science* 21(4):739–764.

LaJeone, L.J., and R.G. Monzingo. 2000. "316(b) and Quad Cities Station, Commonwealth Edison Company." *Environmental Science & Policy* 3:S313–S322.

Langford, T.E. 1975. "The Emergence of Insect from a British River, Warmed by Power Station Cooling-Water. Part II The Emergence Patterns of Some Species of *Ephemeroptera, Trichoptera* and *Megaloptera* in Relation to Water Temperature and River Flow, Upstream and Downstream of the Cooling-Water Outfalls." *Hydrobiologia* 47(1):91–133.

Langford, T.E. 1983. *Electricity Generation and the Ecology of Natural Waters*. Liverpool University Press, Liverpool, England.

Larkin, R.P., and B.A. Frase. 1988. "Circular Paths of Birds Flying near a Broadcasting Tower in Cloud." *Journal of Comparative Physiology* 102:90–93.

Lee, G.F., and P.H. Martin. 1975. "Dissolved Gas Supersaturation and Dilution in Thermal Plumes from Steam Electric Generating Stations." *Water Research* 9:643–648.

Lee, J.M., Jr. 1980. "Raptors and the BPA Transmission System." Pages 41–55 in R.P. Howard and J.F. Gore, eds., *Proceedings of the Workshop on Raptors and Energy*

Developments, Boise, Idaho, January 25–26, 1980. Bonneville Power Administration, U.S. Fish and Wildlife Service, Idaho Power Company, and the Idaho Chapter of the Wildlife Society.

Lee, J.M., Jr., V.L. Chartier, D.P. Hartmann, G.E. Lee, K.S. Pierce, F.L. Shon, R.D. Stearns, and M.T. Zeckmeister. 1989. *Electrical and Biological Effects of Transmission Lines: A Review*, DOE/BP-945, U.S. Department of Energy, Bonneville Power Administration, Portland, Oregon (June).

Lieberman, J.T., and P.H. Muessio. 1978. "Evaluation of an Air Bubbler to Mitigate Fish Impingement at an Electric Generating Plant." *Estuaries* 1(2):129–132.

Maes, J., A.W.H. Turnpenny, D.R. Lambert, J.R. Nedwell, A. Parmentier, and F. Ollevier. 2004. "Field Evaluation of a Sound System to reduce Estuarine Fish Intake Rates at a Power Plant Cooling Water Inlet." *Journal of Fish Biology* 64:938–946.

Magnuson-Stevens Fishery Conservation and Management Act of 1976 (FCMA). 16 USC 1801, et seq.

Manville, A.M., II. 2005. "Bird Strikes and Electrocutions at Power Lines, Communication Towers, and Wind Turbines: State of the Art and State of the Science – Next Steps Toward Mitigation, Bird Conservation Implementation in the Americas." Pages 1051–1064 in C.J. Ralph and T.D. Rich, eds., *Proceedings of the 3rd International Partners in Flight Conference 2002*. USDA Forest Service General Technical Report PSW-GTR-191, Pacific Southwest Research Station, Albany, California.

Marine Mammal Protection Act of 1972 (MMPA) 16 USC 1361 et seq.

Marino, A.A., et al. 1983. "Weak Electric Fields Affect Plant Development." *IEEE Transactions on Biomedical Engineering* BME30(12): 833–34.

Marshall, J.S., and L.W. Vandruff. 2002. "Impact of Selective Herbicide Right-of-Way Vegetation Treatment on Birds." *Environmental Management* 30(6): 801–806.

McCormick, S.D., R.A. Cunjak, B. Dempson, M.F. O'Dea, and J.B. Carey. 1999. "Temperature-Related Loss of Smolt Characteristics in Atlantic Salmon (*Salmo salar*) in the Wild." *Canadian Journal of Fisheries and Aquatic Sciences* 56:1649–1658.

McInerny, M.C. 1990. "Gas-Bubble Disease in Three Fish Species Inhabiting the Heated Discharge of a Steam-Electric Station Using Hypolimnetic Cooling Water." *Water, Air, and Soil Pollution* 49:7–15.

McLean, R., W.A. Richkus, S.P. Schreiner, and D. Fluke. 2002. "Maryland Power Plant Cooling Water Intake Regulations and Their Application in Evaluation of Adverse Environmental Impact." Maryland Power Plant Research Program PPRP-127. Available URL: http://esm.vesar.com/PPRP/316/PPRP-127.pdf (Accessed May 10, 2007).

Meyer, S.W., and S.M. Pegula. 2006. *Injuries, Illness, and Fatalities in the Construction Industry, 2004*. U.S. Department of Labor, Bureau of Labor Statistics, Washington, D.C. (May 24). Available URL: http://www.bls.gov/opub/cwc/print/sh20060519ar01p1.htm (Accessed October 15, 2007).

Meyers-Schone, L., and B.T. Walton. 1990. *Comparison of Two Freshwater Turtle Species as Monitors of Environmental Contamination*. ORNL/TM-11460, Environmental Sciences Division Publication No. 3454, Oak Ridge National Laboratory, Oak Ridge, Tennessee.

Miller, M.W. 1983. "Biological Effects from Exposure to Transmission Line Electromagnetic Fields," *International Right of Way Association* 30(3):8–15.

Mitchell, C.A., and J. Carlson. 1993. "Lesser Scaup Forage on Zebra Mussels at Cook Nuclear Plant, Michigan." *Journal of Field Ornithology* 64:219–222.

Morrow, J.V., and J.C. Fischenich. 2000. *Habitat Requirements for Freshwater Fishes*. EMRRP Technical Notes Collection, ERDC TN-EMRRPSR-06, U.S. Army Corps of Engineers, Engineer Research and Development Center, Vicksburg, Mississippi. (May). Available URL: http://el.erdc.usace.army.mil/elpubs/pdf/sr06.pdf. (Accessed November 12, 2007).

Nagasawa, H., J.B. Little, W.C. Inkret, S. Carpenter, K. Thompson, M.R. Raju, D.J. Chen, and G.F. Strniste. 1990. "Cytogenetic Effects of Extremely Low Doses of Plutonium-238 Alpha-particle Irradiation in CHO K-1 Cells." *Mutation Research* 244:233–238.

National Academy of Sciences (NAS). 1995. *Technical Bases for Yucca Mountain Standards*. Washington, D.C.

National Council on Radiation Protection and Measurements (NCRP). 1991. *Effects of Ionizing Radiation on Aquatic Organisms*. NCRP Report No. 109, Bethesda, Maryland. (August).

National Council on Radiation Protection and Measurements (NCRP). 2006. *Cesium-137 in the Environment: Radioecology and Approaches to Assessment and Management, Recommendations of the National Council on Radiation Protection and Measurements*. NCRP Report No. 154, Bethesda, Maryland. (November).

National Energy Technology Laboratory (NETL). 2006. *Emerging Issues for Fossil Energy and Water*. DOE/NETL-2006/1233, U.S. Department of Energy. (June). Available URL: http://www.netl.doe.gov/technologies/oil-gas/publications/AP/IssuesforFEandWater.pdf (Accessed November 15, 2007).

National Energy Technology Laboratory (NETL). 2007. *Cost and Performance Baseline for Fossil Energy Plants, Vol. 1, Bituminous Coal and Natural Gas to Electricity.* DOE/NETL 2007/1281, Final Report, U.S. Department of Energy, Pittsburgh, Pennsylvania. (May). Available URL: http://www.netl.doe.gov/energy-analyses/pubs/Bituminous%20Baseline_Final %20Report.pdf.

National Environmental Policy Act of 1969, as amended (NEPA). 42 USC 4321 et seq.

National Historic Preservation Act of 1966, as amended (NHPA). 16 USC 470aa et seq.

National Institute of Environmental Health Sciences (NIEHS). 1999. *NIEHS Report on Health Effects from Exposure to Power-Line Frequency Electric and Magnetic Fields*. NIH Publication No. 99-4493, Research Triangle Park, North Carolina.

National Institute of Environmental Health Sciences (NIEHS). 2002. *EMF Electric and Magnetic Fields Associated with the Use of Electric Power, Questions & Answers*. EMF RAPID Program Report. (June).

National Marine Fisheries Service (NMFS). 2002. "Small Takes of Marine Mammals Incidental to Specified Activities; Taking of Marine Mammals Incidental to Power Plant Operations." *Federal Register* 67(1):61–62. (January 2).

National Radiological Protection Board (NRPB). 2001. "Electromagnetic Fields and the Risk of Cancer." *Documents of the NRPB* 12(1). Chilton, Didcot, Oxfordshire, England.

National Radiological Protection Board (NRPB). 2004. "Review of the Scientific Evidence for Limiting Exposure to Electromagnetic Field." *Documents of the NRPB* 12(3). Chilton, Didcot, Oxfordshire, England.

National Renewable Energy Laboratory (NREL). 2003. *Highlights of Biopower Technical Assessment: State of the Industry and the Technology*. NREL/TP-510-33502, U.S. Department of Energy, Golden, Colorado. (April). Available URL: http://www.nrel.gov/ docs/fy03osti/33502.pdf (Accessed October 18, 2007).

National Research Council. 1990. *Decline of the Sea Turtles Causes and Prevention*. National Academy Press, Washington, D.C.

National Waste Policy Act of 1982 (NWPA). 42 USC 10101 et seq.

Nebeker, A.V. 1971. "Effect of High Winter Water Temperatures on Adult Emergence of Aquatic Insects." *Water Resources* 5:777–783.

Nebeker, A.V., F.D. Baker, and S.L. Weitz. 1981. "Survival and Adult Emergence of Aquatic Insects in Air-Supersaturated Water." *Journal of Freshwater Ecology* 1:243–250.

Nichols, S.R. 1981. "Effect of Thermal Effluents on Oligochaetes in Keowee Reservoir, South Carolina." *Hydrobiologia* 79:129–136.

Nichols, M., R.J. Diaz, and L.C. Schaffner. 1990. "Effects of Hopper Dredging and Sediment Dispersion, Chesapeake Bay." *Environmental Geology and Water Science* 15:31–43.

Niemi, G.J., and J.M. Hanowski. 1984. "Effects of a Transmission Line on Bird Populations in the Red Lake Peatland, Northern Minnesota." *Auk* 101:487–98.

Noga, E.J. 2000. *Fish Disease: Diagnosis and Treatment*. Iowa State University Press, Ames, Iowa, pp. 75–77.

Nonindigenous Aquatic Nuisance Prevention and Control Act. (1990). 16 U.S.C. 4701.

Nuclear Energy Institute (NEI). 2007. *Industry Ground Water Protection Initiative – Final Guidance Document*. NEI 07-07 (Final), Washington D.C. (August). Available URL: http://adamswebsearch2.nrc.gov/idmws/doccontent.dll?library=PU_ADAMS^PBNTAD01&ID=072670589 (Accessed November 5, 2007).

Nuclear Management and Resources Council (NUMARC). 1990. *Survey of U.S. Utility-Owned Nuclear Power Plants.* Oak Ridge National Laboratory, Oak Ridge, Tennessee, and NUMARC, Washington, D.C. (June).

Nuclear Management Company (NMC). 2004. *Palisades Nuclear Plant 2004 Radiological Environmental Operating Report*. Docket No. 50-255, Covert, Michigan.

Office of Energy Efficiency and Renewable Energy (EERE). 1997. *Renewable Energy Technology Characterizations.* Topical Report TR-109496, U.S. Department of Energy, Office of Utility Technologies, Washington, D.C. (December). Available URL: http://www1.eere.energy.gov/ba/pba/tech_characterizations.html (Accessed November 12, 2007).

Office of Technology Assessment (OTA). 1989. *Biological Effects of Power Frequency Electric and Magnetic Fields, Background Paper*. OTA-BP-E-53, U.S. Congress, Washington, D.C.

Omaha Public Power District (OPPD). 2004. *Fort Calhoun Nuclear Station 2004 Radiological Environmental Operating Report*. License No. DPR-40.

Parametrix, Inc. 1975. *Resource and Literature Review: Dissolved Gas Supersaturation and Gas Bubble Disease, 1975*. Report #75-0815-042FR. Submitted by Parametrix, Inc., Environmental Services Section, Seattle, Washington, to Northwest Utility Cooperative, Boise, Idaho.

Parkhurst, M.A., L. A. Rathbun, and D.W. Murphy. 1983. *Radiological Assessment of Steam Generator Repair and Replacement*. NUREG/CR-3540, U.S. Nuclear Regulatory Commission. (December).

Parsch, L.D., and M.D. Norman. 1986. "Impact of Powerlines on Crop Yields in Eastern Arkansas." *Arkansas Farm Research*, September–October.

Paton, P.W. 1994. "The Effect of Edge on Avian Nest Success: How Strong Is the Evidence?" *Conservation Biology* 8:17–26.

Patrick, R., J. Palms, D. Kreeger, and C. Harris. 2007. "Twenty-Five-Year Study of Radionuclides in the Susquehanna River via Periphyton Biomonitors." *Health Physics* 92(1):1–9.

Petersen, W., E. Willer, and C. Williamowski. 1997. "Remobilization of Trace Elements from Polluted Anoxic Sediments After Resuspension in Oxic Water." *Water, Air, and Soil Pollution* 99:515–522.

Pinder, J.E. III, T.G. Hinton, and F.W. Whicker. 2006. "Foliar Uptake of Cesium from the Water Column by Aquatic Macrophytes." *Journal of Environmental Radioactivity* 85:23–47.

Poznaniak, D.T., and T.J. Reed. 1978. "Recent Studies Examining the Biological Effects of UHV Transmission Line Ground Gradients." *Proceedings of the American Power Conference* 40:1272–84.

Ramsdell, Jr., J.V., et al. 2001. *Environmental Effects of Extending Fuel Burnup Above 60 GWd/MTU*. NUREG/CR-6703, PNNL-13257. Prepared by Pacific Northwest National Laboratory, Richland, Washington, for U.S. Nuclear Regulatory Commission, Office of Nuclear Reactor Regulation, Washington, D.C. (January).

Real, A., S. Sundell-Bergman, J.F. Knowles, D.S. Woodhead, and I. Zinger. 2004. "Effects of Ionizing Radiation Exposure on Plants, Fish, and Mammals: Relevant Data for Environmental Radiation Protection." *Journal of Radiological Protection* 24:A123–A137.

Richards, B.R., et al. 1984. "Shipworms." Pages 201–25 in M.J. Kennish and R.A. Lutz, eds., *Ecology of Barnegat Bay, New Jersey*, Springer-Verlag, New York.

Robinson, S.K., et al. 1995. "Regional Forest Fragmentation and the Nesting Success of Migratory Birds." *Science* 31:1987–1990.

Rogers, L., and R. Hinds. 1983. *Environmental Studies for a 1100-kV Power Line in Oregon*. Prepared by Battelle, Pacific Northwest Laboratories, Richland, Washington, for Bonneville Power Administration.

Rogers, L.E., et al. 1984. *Environmental Studies of a 1100-kV Prototype Transmission Line—Effects on Trees Growing Below the Line, An Annual Report for the 1984 Study Period*. Prepared by Battelle, Pacific Northwest Laboratories, Richland, Washington, for Bonneville Power Administration.

Romberg, G.P. et al. 1974. "Fish Behavior at a Thermal Discharge into Lake Michigan." Pages 296–312 in J. W. Gibbons and R. R. Sharitz, eds., *Thermal Ecology*, CONF-730505, National Technical Information Service, Springfield, Virginia.

Roosenburg, W.H. 1969. "Greening and Copper Accumulation in the American Oyster, *Crassostrea virginica*, in the Vicinity of a Steam Electric Generating Station." *Chesapeake Science* 10:41–252.

Ross, Q.E., D.J. Dunning, R. Thorne, J.K. Menezes, G.W. Tiller, and J.K. Watson. 1993. "Responses of Alewives to High-frequency Sound at a Power Plant Intake on Lake Ontario." *North American Journal of Fisheries Management* 13:291–303.

Ross, Q.E., D.J. Dunning, J.K. Menezes, M.K. Kenna, Jr., and G. Tiller. 1996. "Reducing Impingement of Alewives with High-frequency Sound at a Power Plant Intake on Lake Ontario." *North American Journal of Fisheries Management* 16:548–559.

Rothermel, B.B. 2004. "Migratory Success of Juveniles: A Potential Constraint on Connectivity for Pond-Breeding Amphibians." *Ecological Applications* 14:1535–1546.

Sackschewsky, M.R. 2004. *Threatened and Endangered Species Evaluation for Operating Commercial Nuclear Power Generating Plants*. Office of Nuclear Reactor Regulation, U.S. Nuclear Regulatory Commission, Washington, D.C. (January).

Sahl, J.D., et al. 2002. "Occupational Magnetic Field Exposure and Cardiovascular Mortality in a Cohort of Electric Utility Workers." *American Journal of Epidemiology* 156:913–918.

Sahr, T., G. Voight, W. Schimmack, H.G. Paretzke, and D. Ernst. 2005. "Low-Level Radiocaesium Exposure Alters Gene Expression in Roots of *Arabidopsis*." *New Phytologist* 168:141–148.

Saunders, D.A., R.J. Hobbs, and C.R. Margules. 1991. "Biological Consequences of Ecosystem Fragmentation: A Review." *Conservation Biology* 5:18–32.

Schreiber, R.K., et al. 1976. "Effects of Power Line Rights-of-Way on Small Nongame Mammal Community Structure." Pages 264–73 in R. E. Tillman, ed., *Proceedings of the First National Symposium on Environmental Concerns in Rights-of-Way Management, January 6–8, 1976*. Mississippi State University, Mississippi State, Mississippi.

Schubel, J.R., C.F. Smith, and T.S. Koo. 1977. "Thermal Effects of Power Plant Entrainment on Survival of Larval Fishes: A Laboratory Assessment." *Chesapeake Science* 18(3):290–298.

Scott-Walton, B. et al. 1979. *Potential Environmental Effects of 765-kV Transmission Lines: Views Before the New York State Public Service Commission, Cases 26529 and 26559, 1976–1978*. U.S. Department of Energy, Washington, D.C.

Sergio, F., L. Marchesi, P. Pedrini, M. Ferrer, and V. Penteriani. 2004. "Electrocution Alters the Distribution and Density of a Top Predator, the Eagle Owl Bubo bubo." *Journal of Applied Ecology* 41:836–845.

Solley, W.B., R.R. Pierce, and H.A. Perlman. 1998. *Estimated Use of Water in the United States in 1995*. U.S. Geological Survey Circular 1200. Available URL: http://onlinepubs.er.usgs.gov/djvu/CIR/circ_1200.djvu (Accessed November 15, 2007).

Southern California Edison (SCE). 2005. *2005 Annual Radiological Environmental Operating Report, San Onofre Nuclear Generating Station Units 1, 2, and 3 and Independent Spent Fuel Storage Facility*. Docket Nos. 50-206, 50-361, 50-362, San Clemente, California.

Southern Company. 2003. *Edwin I. Hatch Nuclear Plant Annual Radiological Environmental Operating Report for 2003*.

State of New York Public Service Commission (SNYPSC). 1978. *Opinion No. 78-13, Opinion and Order Determining Health and Safety Issues, Imposing Operating Conditions, and Authorizing, in Case 26529, Operation Pursuant to Those Conditions*, Power Authority of the State of New York, Albany, New York.

Steenhof, K., et al. 1993. "Nesting by Raptors and Common Ravens on Electrical Transmission Line Towers." *Journal of Wildlife Management* 57(2):271–81.

Stout, I.J., and G.W. Cornwell. 1976. "Nonhunting Mortality of Fledged North American Waterfowl." *Journal of Wildlife Management* 40:681–693.

Su, S.H., L.C. Pearlman, J.A. Rothrock, T.J. Iannuzzi, and B.L. Finley. 2002. "Potential Long-Term Ecological Impacts Caused by Disturbance of Contaminated Sediments: A Case Study." *Environmental Management* 29:234–249.

Sundar, K.S.G., and B.C. Choudhury. 2005. "Mortality of Sarus Cranes (Grus antigone) Due to Electricity Wires in Uttar Pradesh, India." *Environmental Conservation* 32:260–269.

Talbot, J. 1979. "A Review of Potential Biological Impacts of Cooling Tower Salt Drift." *Atmospheric Environment* 13:395–405.

Taylor, W.K., and M.A. Kershner. 1986. "Migrant Birds Killed at the Vehicle Assembly Building (VAB), John F. Kennedy Space Center." *Journal of Field Ornithology* 57:142–154.

Temme, M., and W.B. Jackson. 1979. "Cooling Towers as Obstacles in Bird Migrations." In *Bird Control Seminars Proceedings*, Internet Center for Wildlife Management. Available URL: http://digitalcommons.unl.edu/icwdmbirdcontrol/16 (Accessed November 7, 2007).

Tennessee Valley Authority (TVA). 2003. *Browns Ferry Nuclear Plant Units 1, 2, and 3 – Annual Radiological Environmental Operating Report for 2003*. Docket Nos. 50-259, 50-260, 50-296, Decatur, Alabama.

Turner, F.B., P. Litcht, J.D. Thrasher, P.A. Medica, and J.R. Lannom, Jr. 1971. "Radiation-Induced Sterility in Natural Populations of Lizards (*Crotaphytus wislinzenii* and *Cnemidophorus tigris*)." In D.J. Nelson, ed., Volume 1, *Radionuclides in Ecosystems, Proceedings of the Third National Symposium on Radioecology*. Oak Ridge, Tennessee. (May).

TXU Generation Company (TXU). 2004. *Comanche Peak Steam Electric Station (CPSES) Annual Radiological Environmental Operating Report for 2004*. Docket Nos. 50-445, 50-446. Glen Rose, Texas.

Ulsh, B.A., M.C. Muhlmann-Diaz, F.W. Whicker, T.G. Hinton, J.D. Congdon, and J. S. Bedford. 2000. "Chromosome Translocations in Turtles: A Biomarker in a Sentinel Animal for Ecological Dosimetry." *Radiation Research* 153:752–759.

U.S. Bureau of Labor Statistics (BLS). 2005a. *Fatal Occupational Injuries by Event or Exposure, All United States, 2005*. U.S. Department of Labor, Washington, D.C. Available URL: http://www.bls.gov/iif/oshwc/cfoi/cfch0005.pdf (Accessed October 14, 2007).

U.S. Bureau of Labor Statistics (BLS). 2005b. *2005 News Release, National Census of Fatal Occupational Injuries in 2005*. USDL-06-1364, U.S. Department of Labor, Washington, D.C. Available URL: http://www.bls.gov/iif/oshwc/cfoi/cfnr0012.pdf (Accessed October 14, 2007).

U.S. Bureau of Labor Statistics (BLS). 2005c. *Incidence Rates of Nonfatal Occupational Injuries and Illnesses by Industry and Case Types, 2005*. U.S. Department of Labor, Washington, D.C. Available URL: http://www.bls.gov/iif/oshwc/osh/os/ostb1619.pdf (Accessed October 14, 2007).

U.S. Bureau of Land Management (BLM). 1999. *Telephone Flat Geothermal Development Project, Final Environmental Impact Statement, Environmental Impact Report,* California Clearinghouse Number 97052078; DOI/FEIS 99-6; USFS/MDF/FEIS 99-1; DOE/FEIS-0298. (February). Available URL: http://www.osti.gov/bridge/purl.cover.jsp?purl=/894161-og5W8v/ (Accessed October 22, 2007).

U.S. Bureau of Land Management (BLM). 2007. *Final Vegetation Treatments Using Herbicides on Bureau of Land Management Lands in 17 Western States, Programmatic Environmental Impact Statement*. FES 07-21, U.S. Department of the Interior, Reno, Nevada. (June).

U.S. Department of Energy (DOE). 1999. *Programmatic Environmental Impact Statement for Alternative Strategies for the Long-Term Management and Use of Depleted Uranium Hexafluoride*. DOE/EIS-0269, Washington, D.C. (April). Available URL: http://web.ead.anl.gov/uranium/documents/ (Accessed October 25, 2007).

U.S. Department of Energy (DOE). 2002a. *A Graded Approach for Evaluating Radiation Doses to Aquatic and Terrestrial Biota*. DOE-STD-1153-2002, Washington, D.C. (July 2002).

U.S. Department of Energy (DOE). 2002b. *Final Environmental Impact Statement for a Geologic Repository for the Disposal of Spent Nuclear Fuel and High-Level Radioactive Waste at Yucca Mountain, Nye County, Nevada*. DOE/EIS-0250, Washington, D.C. (February). Available URL: http://www.ocrwm.doe.gov/documents/feis_2/index.htm (Accessed October 25, 2007).

U.S. Department of Energy (DOE). 2004a. *Final Environmental Impact Statement for Construction and Operation of a Depleted Uranium Hexafluoride Conversion Facility at the Paducah, Kentucky, Site*. DOE/EIS-0359, Washington, DC. (June). Available URL: http://web.ead.anl.gov/uranium/documents/ (Accessed October 25, 2007).

U.S. Department of Energy (DOE). 2004b. *Final Environmental Impact Statement for Construction and Operation of a Depleted Uranium Hexafluoride Conversion Facility, at the Portsmouth, Ohio, Site.* DOE/EIS-0360, Washington, D.C. (June). Available URL: http://web.ead.anl.gov/uranium/documents/ (Accessed October 25, 2007).

U.S. Department of Energy (DOE). 2004c. "Record of Decision for Construction and Operation of a Depleted Uranium Hexafluoride Conversion Facility at the Paducah, Kentucky, Site." *Federal Register* (143):44654–44658, Washington, D.C. (July 27). Available URL: http://web.ead.anl.gov/uranium/documents/ (Accessed October 25, 2007).

U.S. Department of Energy (DOE). 2004d. "Record of Decision for Construction and Operation of a Depleted Uranium Hexafluoride Conversion Facility at the Portsmouth, Ohio, Site." *Federal Register* 69(143):44649–44654. Washington, D.C. (July 27). Available URL: http://web.ead.anl.gov/uranium/documents/ (Accessed October 25, 2007).

U.S. Department of Energy (DOE). 2004e. *RESRAD-BIOTA: A Tool for Implementing a Graded Approach to Biota Dose Evaluation*. ISCORS Technical Report 2004-02, Interagency Steering Committee on Radiation Standards, Office of Air, Water and Radiation Protection Policy and Guidance, Washington, D.C. (January). Available URL: http://web.ead.anl.gov/resrad/documents/RESRAD-BIOTA_Manual_Version_1.pdf. (Accessed November 13, 2007).

U.S. Department of Energy (DOE). 2006a. *Report to Congress – Spent Nuclear Fuel Recycling Program Plan*. Washington, D.C. (May). Available URL: http://www.gnep.energy.gov/pdfs/snf RecyclingProgramPlanMay2006.pdf (Accessed October 25, 2007).

U.S. Department of Energy (DOE). 2007a. *Draft Supplement Analysis for Locations(s) to Dispose of Depleted Uranium Oxide Conversion Product Generated from DOE's Inventory of Depleted Uranium Hexafluoride (DOE/EIS-0359-SA1 and DOE/EIS-0360-SA1).* Washington, D.C. (March). Available URL: http://web.ead.anl.gov/uranium/documents/ (Accessed October 25, 2007).

U.S. Department of Energy (DOE). 2007b. *GNEP Overview Fact Sheet*. Washington, D.C. Available URL: http://www.gnep.energy.gov/pdfs/06-GA50506-01.pdf (Accessed October 25, 2007).

U.S. Department of Energy (DOE). 2008. *Final Supplemental Environmental Impact Statement for a Geologic Repository for the Disposal of Spent Nuclear Fuel and High-Level Radioactive Waste at Yucca Mountain, Nye County, Nevada* (DOE/EIS-0250F-S1). Washington, D.C. June. Available URL: http://www.ocrwm.doe.gov/ym_repository/seis/index.shtml. ML081750211, ML081750212, ML081750213, ML081750214, ML081750216, ML081750217, ML081750218.

U.S. Department of Labor (DOL). 2007a. *Industry Injury and Illness Data – 2006, Summary Table 1, Incident Rates of Non-Fatal Occupational Injuries and Illnesses by Industry and Case Types*. Bureau of Labor Statistics, Washington, D.C. Available URL: http://www.bls.gov/iif/oshwc/osh/os/osnr0028.txt (Accessed October 15, 2007).

U.S. Department of Labor (DOL). 2007b. *Census of Fatal and Occupational Injuries – Current and Revised Data for 2006*, Table A-1. Bureau of Labor Statistics, Washington, D.C. Available URL: http://www.bls.gov/iif/oshwc/cfoi/cftb0214.pdf (Accessed October 15, 2007).

U.S. Environmental Protection Agency (EPA). 1974. "*Information on Levels of Environmental Noise Requisite to Protect Public Health and Welfare with an Adequate Margin of Safety*." Report 550/9-74-004, Washington, D.C. Available online at http://www.nonoise.org/library/levels74/levels74.htm. March. (See also "*EPA Identifies Noise Levels Affecting Health and Welfare.*" September 21, 2007. Available online at http://www.epa.gov/history/topics/noise/01.htm. Accessed March 2, 2009).

U.S. Environmental Protection Agency (EPA). 1986. *Quality Criteria for Water*. EPA 440/5-86-001, Office of Water, Washington. D.C. (May).

U.S. Environmental Protection Agency (EPA). 1989. *Drinking Water Criteria Document for Chlorine, Hypochlorous Acid and Hypochlorite Ion*. Prepared by Environmental Criteria and Assessment Office, Cincinnati, Ohio, for the EPA Office of Drinking Water.

U.S. Environmental Protection Agency (EPA). 1990. *Evaluation of the Potential Carcinogenicity of Electromagnetic Fields*. EPA/600/6-90/005B, Workshop Review Draft, Washington, D.C. (October).

U.S. Environmental Protection Agency (EPA). 1993. *Natural Wetlands and Urban Stormwater: Potential Impacts and Management*, Office of Wetlands, Oceans, and Watersheds, Wetlands Division, Washington, D.C. (February).

U.S. Environmental Protection Agency (EPA). 1996. *Protecting Natural Wetlands, A Guide to Stormwater Best Management Practices*. EPA-843-B-96-001, Office of Water. (October).

U.S. Environmental Protection Agency (EPA). 1999. *Consideration of Cumulative Impacts in EPA Review of NEPA Documents*. EPA 315-R-99-002, Office of Federal Activities, Washington, D.C. (May).

U.S. Environmental Protection Agency (EPA). 2002. *Case Study Analysis for the Proposed Section 316(b) Phase II Existing Facilities Rule*. EPA-821-R-02-002, Office of Science and Technology, Washington, D.C. (February).

U.S. Environmental Protection Agency (EPA). 2004a. *The Incidence and Severity of Sediment Contamination in Surface Waters of the United States, National Sediment Quality Survey: Second Edition*. EPA-823-R-04-007, Office of Science and Technology, Washington, D.C. (November).

U.S. Environmental Protection Agency (EPA). 2004b. "National Pollutant Discharge Elimination System – Final Regulations to Establish Requirements for Cooling Water Intake Structures at Phase II Existing Facilities." *Federal Register* 69(131):41575–41624. (July 9).

U.S. Environmental Protection Agency (EPA). 2005. "Public Health and Environmental Radiation Protection Standards for Yucca Mountain, Nevada." *Federal Register* 70(161):49014–49068. (August 22).

U.S. Environmental Protection Agency (EPA). 2006. *Final Report: Environmental Footprints and Costs of Coal-Based Integrated Gasification Combined Cycle and Pulverized Coal Technologies*. EPA-430/R-06/006, Clean Air Markets, Office of Atmospheric Programs, Washington, D.C. (July). Available URL: http://www.epa.gov/air/caaac/coaltech/2007_01_epaigcc.pdf (Accessed October 12, 2007).

U.S. Environmental Protection Agency (EPA). 2007a. "National Pollutant Discharge Elimination System – Suspension of Regulations Establishing Requirements for Cooling Water Intake Structures at Phase II Existing Facilities." *Federal Register* 72(130):37107–37109. (July 9).

U.S. Environmental Protection Agency (EPA). 2007b. "Notice of Data Availability on the Disposal of Coal Combustion Wastes in Landfills and Surface Impoundments," *Federal Register* 72(167), Office of Solid Waste, Research Triangle Park, North Carolina, August 29. Available URL: http://www.epa.gov/fedrgstr/EPA-WASTE/2007/August/Day-29/f17138.pdf (Accessed October 15, 2007).

U.S. Fish and Wildlife Service and National Marine Fisheries Service (USFWS and NMFS). 1998. *Endangered Species Consultation Handbook, Procedures for Conducting Consultation and Conference Activities Under Section 7 of the Endangered Species Act*. Available URL: http://www.fws.gov/endangered/consultations/s7hndbk/s7hndbk.htm. (Accessed November 14, 2007).

U.S. Nuclear Regulatory Commission (NRC). 1974. *Environmental Survey of the Uranium Fuel Cycle*. WASH-1248, U.S. Atomic Energy Commission, Washington, D.C. (April).

U.S. Nuclear Regulatory Commission (NRC). 1976. *Environmental Survey of the Reprocessing and Waste Management Portions of the LWR Fuel Cycle, A Task Force Report*. NUREG-0116 (Supp. 1 to WASH-1248), Washington, D.C. (October).

U.S. Nuclear Regulatory Commission (NRC). 1977. *Calculation of Annual Doses to Man from Routine Releases of Reactor Effluents for the Purpose of Evaluating Compliance with 10 CFR Part 50, Appendix 1*. Regulatory Guide 1.109, Office of Standards Development. (October).

U.S. Nuclear Regulatory Commission (NRC). 1980. *Prairie Island Nuclear Generating Plant, Unit Nos. 1 and 2, Docket Nos. 50-282 and 50-306, Amendment to Facility Operating License*. Northern States Power Company.

U.S. Nuclear Regulatory Commission (NRC). 1996. *Generic Environmental Impact Statement for License Renewal of Nuclear Plants*. NUREG-1437, Vols. 1 and 2, Office of Nuclear Reactor Regulation, Washington, D.C.

U.S. Nuclear Regulatory Commission (NRC). 1999a. *Generic Environmental Impact Statement for License Renewal of Nuclear Plants, Main Report, Section 6.3 – Transportation, Table 9.1, Summary of Findings on NEPA Issues for License Renewal of Nuclear Power Plants, Final Report*. NUREG-1437, Addendum 1, Division of Regulatory Improvement Programs, Office of Nuclear Reactor Regulation, Washington, D.C. (August).

U.S. Nuclear Regulatory Commission (NRC). 1999b. *Generic Environmental Impact Statement for License Renewal of Nuclear Plants, Supplement 1: Regarding Calvert Cliffs Nuclear Power Plant*. NUREG-1437, Supplement 1, Office of Nuclear Reactor Regulation, Washington, D.C. (October).

U.S. Nuclear Regulatory Commission (NRC). 2002a. *Generic Environmental Impact Statement for Decommissioning of Nuclear Facilities, Supplement 1: Regarding the Decommissioning of Nuclear Power Reactors*. NUREG-0586, Supplement 1, Vols. 1 and 2, Office of Nuclear Reactor Regulation, Washington, D.C. (November).

U.S. Nuclear Regulatory Commission (NRC). 2002b. *Generic Environmental Impact Statement for License Renewal of Nuclear Plants, Supplement 5: Regarding Turkey Point, Units 3 and 4.* NUREG-1437, Supplement 5, Office of Nuclear Reactor Regulation, Washington, D.C. (January).

U.S. Nuclear Regulatory Commission (NRC). 2002c. *Generic Environmental Impact Statement for License Renewal of Nuclear Plants, Supplement 8: Regarding McGuire Nuclear Station, Units 1 and 2.* NUREG-1437, Supplement 8, Office of Nuclear Reactor Regulation, Washington, D.C. (December).

U.S. Nuclear Regulatory Commission (NRC). 2002d. *Generic Environmental Impact Statement for License Renewal of Nuclear Plants, Supplement 6: Regarding Surry Power Station, Units 1 and 2.* NUREG-1437, Supplement 6, Office of Nuclear Reactor Regulation, Washington, D.C. (November).

U.S. Nuclear Regulatory Commission (NRC). 2002e. *Generic Environmental Impact Statement for License Renewal of Nuclear Plants, Supplement 7: Regarding North Anna Power Station, Units 1 and 2*. NUREG-1437, Supplement 7, Office of Nuclear Reactor Regulation, Washington, D.C. (November).

U.S. Nuclear Regulatory Commission (NRC). 2003a. *Generic Environmental Impact Statement for License Renewal of Nuclear Plants, Supplement 10: Regarding Peach Bottom Atomic Power Station, Units 2 and 3*. NUREG-1437, Supplement 10, Office of Nuclear Reactor Regulation, Washington, D.C. (January).

U.S. Nuclear Regulatory Commission (NRC). 2003b. *Generic Environmental Impact Statement for License Renewal of Nuclear Plants, Supplement 13: Regarding H.B. Robinson Steam Electric Plant, Unit 2.* NUREG-1437, Supplement 13, Office of Nuclear Reactor Regulation, Washington, D.C. (December).

U.S. Nuclear Regulatory Commission (NRC). 2004a. *Generic Environmental Impact Statement for License Renewal of Nuclear Plants, Supplement 17: Regarding Dresden Nuclear Power Station, Units 2 and 3*. NUREG-1437, Supplement 17, Office of Nuclear Reactor Regulation, Washington, D.C. (June 2004).

U.S. Nuclear Regulatory Commission (NRC). 2004b. *Generic Environmental Impact Statement for License Renewal of Nuclear Plants, Supplement 15: Regarding Virgil C. Summer Nuclear Station.* NUREG-1437, Supplement 15, Office of Nuclear Reactor Regulation, Washington, D.C. (February).

U.S. Nuclear Regulatory Commission (NRC). 2005a. *Generic Environmental Impact Statement for License Renewal of Nuclear Plants, Supplement 20: Regarding Donald C. Cook Nuclear Plant Units No. 1 and 2*. NUREG-1437, Supplement 20, Office of Nuclear Reactor Regulation, Washington, D.C. (May).

U.S. Nuclear Regulatory Commission (NRC). 2005b. *Generic Environmental Impact Statement for License Renewal of Nuclear Plants, Supplement 23: Regarding Point Beach Nuclear Plant, Units 1 and 2*. NUREG-1437, Supplement 23, Office of Nuclear Reactor Regulation, Washington, D.C. (August).

U.S. Nuclear Regulatory Commission (NRC), 2005c. *Generic Environmental Impact Statement for License Renewal of Nuclear Plants, Supplement 22: Regarding Millstone Power Station, Units 2 and 3*. NUREG-1437, Supplement 22, Office of Nuclear Reactor Regulation, Washington, D.C. (July).

U.S. Nuclear Regulatory Commission (NRC). 2005d. *Generic Environmental Impact Statement for License Renewal of Nuclear Plants, Supplement 21: Regarding Browns Ferry Nuclear Plant, Units 1, 2, and 3*. NUREG-1437, Supplement 21, Office of Nuclear Reactor Regulation, Washington, D.C.. (June).

U.S. Nuclear Regulatory Commission (NRC). 2005e. "Implementation of a Dose Standard After 10,000 Years." *Federal Register* (173):53313–53320. Washington, D.C. (September 8).

U.S. Nuclear Regulatory Commission (NRC). 2005f. *Event Notification Report for June 29, 2005*. Operations Center, Washington, D.C. Available URL: http://www.nrc.gov/reading-rm/doc-collections/event-status/event/2005/20050629en.html (Accessed November 20, 2007).

U.S. Nuclear Regulatory Commission (NRC). 2006a. *Liquid Radioactive Release Lessons Learned Task Force Final Report*. (September 1). Available URL: http://adamswebsearch2.nrc.gov/idmws/doccontent.dll?library=PU_ADAMS^PBNTAD01&ID=062770207. (Accessed October 17, 2007).

U.S. Nuclear Regulatory Commission (NRC). 2006b. *Generic Environmental Impact Statement for License Renewal of Nuclear Plants, Supplement 25: Regarding New Brunswick Steam Electric Plant, Units 1 and 2*. Washington, D.C., Office of Nuclear Reactor Regulation, NUREG-1437, Supplement 25. (April).

U.S. Nuclear Regulatory Commission (NRC). 2006c. *Generic Environmental Impact Statement for License Renewal of Nuclear Plants, Supplement 26: Regarding Monticello Nuclear Generating Plant*. NUREG-1437, Supplement 26, Office of Nuclear Reactor Regulation, Washington, D.C. (August).

U.S. Nuclear Regulatory Commission (NRC). 2006d. *Generic Environmental Impact Statement for License Renewal of Nuclear Plants, Supplement 27: Regarding Palisades Nuclear Plant*. NUREG-1437, Supplement 27, Office of Nuclear Reactor Regulation, Washington, D.C. (October).

U.S. Nuclear Regulatory Commission (NRC). 2006e. *Generic Environmental Impact Statement for License Renewal of Nuclear Plants, Supplement 24: Regarding the Nine Mile Point*. NUREG-1437, Office of Nuclear Reactor Regulation, Washington, D.C. (May).

U.S. Nuclear Regulatory Commission (NRC). 2007a. *Generic Environmental Impact Statement for License Renewal of Nuclear Plants Supplement 30: Regarding Vermont Yankee Power Station*. NUREG-1437, Supplement 30, Office of Nuclear Reactor Regulation, Washington, D.C. (August).

U.S. Nuclear Regulatory Commission (NRC). 2007b. *Generic Environmental Impact Statement for License Renewal of Nuclear Plants, Supplement 28: Regarding Oyster Creek Nuclear Generating Station*. NUREG-1437, Supplement 28, Office of Nuclear Reactor Regulation, Washington, D.C. (January).

U.S. Nuclear Regulatory Commission (NRC). 2007c. *Generic Environmental Impact Statement for License Renewal of Nuclear Plants, Supplement 29: Regarding Pilgrim Nuclear Power Station*. NUREG-1437, Supplement 29, Office of Nuclear Reactor Regulation, Washington, D.C. (July).

U.S. Nuclear Regulatory Commission (NRC). 2007d. "Combined License Applications and Subsequent Documentation." Available URL: http://www.nrc.gov/reactors/new-licensing/col.html (Accessed November 15, 2007).

U.S. Nuclear Regulatory Commission (NRC). 2007e. "Early Site Permits-Licensing Reviews." Available URL: http://www.nrc.gov/reactors/new-licensing/esp.html (Accessed November 15, 2007).

U.S. Nuclear Regulatory Commission (NRC). 2008a. *Generic Environmental Impact Statement for License Renewal of Nuclear Plants, Supplement 32: Regarding Wolf Creek Generating Station*. NUREG-1437, Supplement 32, Office of Nuclear Reactor Regulation, Washington, D.C. (May).

U.S. Nuclear Regulatory Commission (NRC). 2008b. *Generic Environmental Impact Statement for License Renewal of Nuclear Plants, Supplement 34: Regarding Susquehanna*

Steam Electric Station. Draft, NUREG-1437, Supplement 34, Office of Nuclear Reactor Regulation, Washington, D.C. (January).

U.S. Nuclear Regulatory Commission (NRC). 2008c. *Indian Point Nuclear Generating Units 1 & 2 – NRC Inspection Report. Nos. 05000003/2007010 and 05000247/2007010*. Docket Numbers 50-003 and 50-247, Washington, D.C. Accessible at ML081340425.

Valberg, P.A.., R. Kavet, and C.N. Rafferty. 1997. "Can Low Level 50/60-Hz Electric and Magnetic Fields Cause Biological Effects?" *Radiation Research* 148(1):2–21. (July).

Varfalvy, L., et al. 1985. "Measurement and Statistical Analysis of Ozone from HVDC and HVAC Transmission Lines." *IEEE Transactions on Power Apparatus and Systems*, PAS-104(10), October.

Veil, J.A., J.K. Rice, and M.E.S. Raivel. 1997. *Biocide Usage in Cooling Towers in the Electric Power and Petroleum Refining Industries*. Prepared by Argonne National Laboratory, Argonne, Illinois, for the U.S. Department of Energy, Office of Fossil Energy, Washington, D.C. (September). Available URL: http://www.ead.anl.gov/pub/doc/ANL-Biocide_Usage.pdf (Accessed November 1, 2007).

Warren, J.L., et al. 1981. *Environmental Studies of a 1100 kV Prototype Transmission Line: An Annual Report for the 1980 Study Period*. Battelle, Pacific Northwest Laboratories, Richland, Washington.

Whitlatch, R.B., A.M. Lohrer, S.F. Thrush, R.D. Pridmore, J.E. Hewitt, V.J. Cummings, and R.N. Zajac. 1998. "Scale-Dependent Benthic Recolonization Dynamics: Life Stage-Based Dispersal and Demographic Consequences." *Hydrobiologia* 375/376: 217–226.

Wilber, D.H., and D.G. Clarke. 2001. "Biological Effects of Suspended Sediments: A Review of Suspended Sediment Impacts on Fish and Shellfish with Relation to Dredging Activities in Estuaries." *North American Journal of Fisheries Management* 21:855–875.

Wilcove, D.S. 1988. "Changes in the Avifauna of the Great Smoky Mountains: 1947–1983." *Wilson Bulletin* 100:256–271.

Williams, R.D., and E.W. Colson. 1989. "Raptor Associations with Linear Rights-of-Way," *Western Raptor Management Symposium and Workshop No. 12*, 173–92.

Wolf Creek Generating Station (WCGS). 2003. *Applicant's Environmental Report; Operating License Renewal Stage*. Docket No. 50-482, License No. NPF-42.

Wolf Creek Nuclear Operating Corporation (WCNOC). 2002. *Wolf Creek Generating Station Annual Environmental Operating Report 2002*. Docket No. 50-482, RA 03-0053.

Wolff, J.O., E.M. Schauber, and W.D. Edge. 1997. "Effects of Habitat Loss and Fragmentation on the Behavior and Demography of Gray-Tailed Voles." *Conservation Biology* 11:945–956.

World Health Organization (WHO). 2007. *Extremely Low Frequency Fields*. Environmental Health Criteria Monograph No. 238, Geneva, Switzerland. Available URL: http://www.who.int/pehemf/publications/elf_ehc/en/index.html.

Wright, T., J. Tomlinson, T. Schueler, K. Cappiella, A. Kitchell, and D. Hirschman. 2006. *Direct and Indirect Impacts of Urbanization on Wetland Quality: Wetlands and Watersheds Article # 1*. Prepared by Center for Watershed Protection for U.S. Environmental Protection Agency, Office of Wetlands, Oceans and Watersheds, Washington, D.C. (December).

Yahner, R.H. 1988. "Changes in Wildlife Communities near Edges." *Conservation Biology* 2:333–339.

Yahner, R.H. 2004. "Wildlife Response to More Than 50 Years of Vegetation Maintenance on a Pennsylvania, U.S., Right-of-Way." *Journal of Arboriculture* 30:123–126.

Yahner, R.H., et al. 2004. "Long-Term Effects of Rights-of-Way Maintenance via the Wire-Border Zone Method on Bird Nesting Ecology." *Journal of Arboriculture* 30: 288–294.

Yahner, R.H., R.J. Hutnik, and S.A. Liscinsky. 2002. "Bird Populations Associated with an Electric Transmission Right-of-Way." *Journal of Arboriculture* 28:123–130.

York, R., M. Foster, N. Davis, J. Schoonmaker, R. Unsworth, C. Holmes, J. O'Hagan, and J. McKinney. 2005. *Issues and Environmental Impacts Associated with Once-Through Cooling at California's Coastal Power Plants.* CEC-700-2005-013, California Energy Commission, Sacramento, California. (June). Available URL: http://www.energy.ca.gov/2005publications/CEC-700-2005-013/CEC-700-2005-013.pdf (Accessed May 21, 2007).

Zach, R., J.L. Hawkins, and S.C. Sheppard. 1993. "Effects of Ionizing Radiation on Breeding Swallows at Current Radiation Protection Standards." *Environmental Toxicology and Chemistry* 12:779.

5 List of Preparers

The overall responsibility for the preparation of this Generic Environmental Impact Statement revision was assigned to the U.S. Nuclear Regulatory Commission (NRC), Office of Nuclear Reactor Regulation. The revision was prepared by members of the Office of Nuclear Reactor Regulation with assistance from other NRC organizations, Argonne National Laboratory, and Information Systems Laboratories, Inc.

Name	Education/Expertise	Contribution
Nuclear Regulatory Commission		
Briana Balsam	B.S., Conservation Biology; 3 years of experience in environmental impact analysis	Ecology
Dennis Beissel	B.S., Geology, M.S., Geology; 39 years of commercial and government services in environmental and natural resource assessment	Hydrology; Air Quality/ Meteorology
Eric Benner	B.S., Nuclear Engineering, M.S., Environmental Engineering; 18 years of regulatory experience in reactor oversight and environmental assessment	RERB Branch Chief
Andrew Carrera	M.S., Radiation Health Science, B.S. in Biology; 3 years of research experience in nuclear medicine at NIH; 5 years of research experience in radiopharmacology and radiation oncology at Johns Hopkins University; 2 years of regulatory experience with NEPA reviews	Human Health; Waste Management/Fuel Cycle; Accidents
Jennifer Davis	B.A., Historic Preservation and Classical Civilization (archaeology); 2 years of fieldwork; 7 years of experience in NEPA compliance, project management, and cultural resources impact analysis and regulatory compliance	Project Manager; Cultural Resources; Decommissioning
Nathan Goodman	M.S., Environmental Science; 3 years of consulting experience in NEPA compliance; 3 years of regulatory experience with NEPA reviews	Terrestrial Ecology
Donald Helton	B.S., M.S., Nuclear Engineering; 7 years of experience in computational thermal hydraulic and severe accident analysis for reactors and spent fuel; additional limited experience in probabilistic risk assessment, consequence analysis, and incident response	Postulated Accidents; Severe Accident Mitigation Alternatives

Name	Education/Expertise	Contribution
Nuclear Regulatory Commission (cont.)		
Stephen Klementowicz	M.S., Health Physics; 27 years of commercial and regulatory experience in reactor health physics, radiological effluent and environmental monitoring programs, and radioactive waste	Human Health; Waste Management/Fuel Cycle; Accidents; Decommissioning
Justin Leous	M.P.A., Environmental Policy; 3 years of environmental project development and management	Alternatives
Ekatarina Lenning	M.S., Health Physics, Radiological Protection and Safety, B.S., Chemistry; 3 years of experience in radiological dose and risk assessment; 3 years of experience in environmental research and assessment, air/quality/meteorology, waste management	Air Quality and Meteorology; Human Health; Waste Management/Fuel Cycle; Accidents; Decommissioning
Dennis Logan	Ph.D., Marine Studies (Biological Oceanography), M.S., Marine Biology; 33 years of experience assessing the effects of anthropogenic actions on natural populations, including ecological and human health risk assessments, power plant-related environmental studies, and project management	Aquatic Ecology; Decommissioning
Sarah Lopas	M.P.A., Environmental Policy, B.A., Molecular Biology and Environmental Science; 6 years of experience in environmental site assessments, soil and groundwater remediation, and environmental impact statement preparation	Ecology; Alternatives
Jessie Muir	M.S., Environmental Engineering and Science; 5 years of consulting experience in regulatory compliance and waste management; 1 year of regulatory experience with NEPA reviews	Nonradiological Waste
Robert Palla	B.S., M.S., Mechanical Engineering; 27 years of experience in severe accident analysis; 19 years of experience in analysis of severe accident mitigation alternatives	Postulated Accidents; Severe Accident Mitigation Alternatives
Jeffrey Rikhoff	M.R.P., Regional Planning, M.S., Economic Development and Appropriate Technology; 21 years of experience in NEPA compliance, socioeconomics and environmental justice impact analysis, cultural resource impacts, and comprehensive land-use and development planning	Socioeconomics; Environmental Justice; Cultural Resources; Land Use; Decommissioning

Name	Education/Expertise	Contribution
Nuclear Regulatory Commission (cont.)		
Andrew Stuyvenberg	M.E.M., Environmental Economics and Policy, B.S., Biochemistry/Molecular Biology and Political Science; 3 years of experience in energy policy research and development, project management, utilities regulation, and energy investing	Alternatives
Scott Werts	Ph.D., Geology; 5 years of experience in groundwater, sedimentology and soil science physical and geochemical assessments; 2 years of experience in meteorology	Hydrology, Meteorology/Air Quality, Alternatives
Elizabeth Wexler	M.E.M., Environmental Management; 3 years of experience in environmental impact assessment	Aquatic Ecology
Argonne National Laboratory[(a)]		
Timothy Allison	M.S., Mineral and Energy Resource Economics, M.A., Geography; 21 years of experience in regional analysis and economic impact analysis	Socioeconomics; Environmental Justice
Halil Avci	Ph.D., Nuclear Engineering; 23 years of experience in environmental assessment, waste management, accident analysis, and project management	Assistant Project Team Leader; Waste Management/Fuel Cycle
John Hayse	Ph.D., Zoology; 23 years of experience in ecological research and environmental assessment	Aquatic Ecology
Sunita Kamboj	Ph.D., Health Physics, 16 years of experience in radiological dose and risk assessment	Human Health
Ronald Kolpa	M.S., Inorganic Chemistry, B.S., Chemistry; 36 years of experience in environmental regulation, auditing, and planning	Alternatives
James Kuiper	M.S., Biometrics, Certificate in Remote Sensing; 21 years of experience in GIS analysis, programming, and remote sensing	Geographic Information System Cartography and Analysis
Kirk LaGory	Ph.D., Zoology, M.En., Environmental Science; 33 years of experience in ecological research; 22 years of experience in environmental assessment	Team Leader
Michael Lazaro	M.S., Environmental/Nuclear Engineering, 34 years of experience in atmospheric science/ modeling research and development; 23 years of experience in environmental assessment	Air Quality and Meteorology; Noise
William Metz	Ph.D., Geography, M.A., Geography, M.B.A, M.I.S, Information Systems; 36 years of experience in socioeconomic and land-use assessment, emergency planning, and perception-based impact research	Land Use; Visual Resources
Marita Moniger	B.A., English; 31 years of experience in technical editing and writing	Technical Editor

Name	Education/Expertise	Contribution
Argonne National Laboratory (cont.)		
Ellen Moret	B.A., Environmental Studies; 4 years of experience in environmental impact statement preparation	Administrative Support, Alternatives
Michele Nelson	Graphic designer; 30 years of experience in graphical design and technical illustration	Graphics
Lee Northcutt	A.A.; 19 years of experience in program and editorial assistance; 12 years of experience in environmental impact statement preparation	Glossary
Daniel O'Rourke	M.S., Industrial Archaeology; 13 years of experience in cultural resource management; 8 years of experience in historical property issues	Cultural Resources
Terri Patton	M.S., Geology; 20 years of experience in environmental research and assessment	Cumulative Impacts
John Quinn	M.S., Geology; 20 years of experience in hydrogeology	Hydrology, Geology, Soils
Robert Van Lonkhuyzen	B.A., Biology; 19 years of experience in ecological research and environmental assessment	Terrestrial Ecology
William Vinikour	M.S., Biology with environmental emphasis; 31 years of experience in ecological research and environmental assessment	Aquatic Ecology
Leroy Walston	M.S., Biology; 4 years of experience in ecological and environmental research	Terrestrial Ecology
Konstance Wescott	M.A., Anthropology, B.A., Mathematics and Sociology/Anthropology; 21 years of experience in archaeology, 19 years in environmental assessment	Alternatives
Information Systems Laboratories, Inc.[(b)]		
Thomas King	M.S., Mechanical Engineering; 40 years of experience in nuclear reactor design, operation, safety reviews, rulemaking and research, including the environmental impacts of postulated accidents	Postulated Accidents
Christopher Chwasz	B.S., Nuclear Engineering and Radiological Sciences; 3 years of experience in nuclear science and nuclear power research	Postulated Accidents

(a) Argonne National Laboratory is operated for the U.S. Department of Energy by UChicago Argonne, LLC.
(b) Information Systems Laboratories, Inc., is located in Rockville, Maryland.

6 Distribution List

David Agnew	Cape Cod Downwinders
Jack Alexander	Entergy Nuclear
Rita Arditti	Women's Community Center Cancer Project
Rochelle Becker	San Luis Obispo Mothers for Peace
Tama Becker	San Luis Obispo Mothers for Peace
Rick Buckley	Entergy Nuclear
Brian Campbell	WATD
John Carlson	American Electric Power
Vera S Cohen	Women's Community Cancer Program and Toxic Action Center
Corey J Conn	Nuclear Energy Information Service
Alice Domby	General Public
Art Domby	Troutman Sanders, LLP
Emma Domby	General Public
Fred Emerson	Nuclear Energy Institute
Jerome S Fields	PPL
Carey W Fleming	Winston and Strawn
Sandra Gavutis	C-10 Research and Education Foundation
Guillermo Gonzalez	Office of Senator Feinstein
Terry Grebel	Pacific Gas and Electric
Debbie Grinnell	C-10 Research and Education Foundation
Oliver Hall	Massachusetts Public Interest Research Group
Milton Hirshberg, MD	Capedownwinders
Darcie Houck	California Energy Commission
Julea Hovey	Constellation Nuclear Service, Inc
Peggy Huang	General Public
Tim Judson	Citizens Awareness Network
Deb Katz	Citizens Awareness Network
Fred Katz	Climate Action Network
Rita Kilpatrick	Southern Alliance for Clean Energy
Jeanne M Kota	Sierra Club
Jan Kozyra	Progress Energy
Adele Kushner	Action for a Clean Environment
David J Lach	Entergy Nuclear
Mary Lampert	Pilgrim Security Watch
Bill Maher	Exelon Corporation

7 Glossary

Absorbed dose: The energy imparted by ionizing radiation per unit mass of tissue. The units of absorbed dose are the rad and the gray (Gy).

Acid rain: Also called acid precipitation or acid deposition, acid rain is precipitation containing harmful amounts of nitric and sulfuric acids formed primarily by sulfur dioxide and nitrogen oxides released into the atmosphere when fossil fuels are burned. It can be wet precipitation (rain, snow, or fog) or dry precipitation (absorbed gaseous and particulate matter, aerosol particles, or dust). Acid rain has a pH below 5.6. Normal rain has a pH of about 5.6, which is slightly acidic. The term pH is a measure of acidity or alkalinity and ranges from 0 to 14. A pH measurement of 7 is regarded as neutral. Measurements below 7 indicate increased acidity, while those above indicate increased alkalinity.

Activation products: Radionuclides produced from the interaction of radiation with matter. Generally it is the neutrons that interact with stable atoms and make them radioactive.

Activity: The rate of disintegration (transformation) or decay of radioactive material. The units of radioactivity are the curie (Ci) and the Becquerel (Bq).

Acute effects: Effects resulting from short-term exposure to relatively high levels of a stressing factor (e.g., contaminant, disease, electromagnetic field, noise, and radionuclides) over long periods.

Acute radiation exposure: A single accidental exposure to high doses of radiation for a short period of time, which may produce biological effects within a short time after exposure.

Adverse environmental impacts: Impacts that are determined to be harmful to the environment.

Advisory Council for Historic Preservation: A Federal oversight group that provides guidance on the application of Federal law concerning cultural resources and serves as an arbiter when disputes arise.

Aerobic: Requiring the presence of oxygen to support life.

Air quality: Assessment of the health-related and visual characteristics of the air, often derived from quantitative measurements of the concentrations of specific injurious or contaminating substances. Air quality standards are the prescribed levels of substances in the outside air that cannot be exceeded during a specific time in a specified area.

ALARA: Acronym for "as low as (is) reasonably achievable." This means making every reasonable effort to maintain exposures to ionizing radiation as far below the dose limits as practical, consistent with the purpose for which the licensed activity is undertaken, taking into account the state of technology, the economics of improvements in relation to state of technology, the economics of improvements in relation to benefits to the public health and safety, and other societal and socioeconomic considerations, and in relation to utilization of nuclear energy and licensed materials in the public interest (see 10 CFR 20.1003).

Alluvial: Refers to soil or earth material that has been deposited by running water, as in a riverbed, floodplain, or delta.

Alluvial aquifer: An aquifer composed of alluvial sediments, generally located in a river valley.

Alpha particle: Positively charged highly energetic ionizing radiation that consists of two protons and two neutrons.

Alternatives to the proposed action considered in the GEIS: (1) Not renewing the operating licenses of commercial nuclear power plants (no-action alternative). This is the only alternative to the proposed action that is within the NRC's decision-making authority; (2) replacing existing nuclear generating capacity with other energy sources (including fossil energy generation, new nuclear generation, and renewable energy); (3) compensating for lost nuclear generation capacity by using demand-side management (conservation) or purchasing power.

Ambient air: The surrounding atmosphere as it exists around people, plants, and structures.

Ambient noise level: The level of acoustic noise at a given location, such as in a room or outdoors, that is representative of typical conditions unaffected by human activities.

Ambient water temperature: The water temperature in a water body that is representative of typical conditions unaffected by human activities (e.g., the temperature of the surface water body away from the thermal effluent).

Anadromous: Pertaining to fish that spend a part of their life cycle in the sea and return to freshwater streams to spawn; for example, salmon, steelhead, and shad.

Annual dose: Dose received in one year.

Anoxic: Absence of oxygen. Usually used in reference to an aquatic habitat.

Anthracite coal: A hard, black coal averaging 86–97 percent carbon, but with a slightly lower heating value than bituminous coal. Anthracite coal deposits are rare in the United States and account for less than 1 percent of annual production. Its limited availability confines its use to specialty applications such as residential and industrial space heating.

Anthropogenic: Made or generated by a human or caused by human activity.

Aquatic biota: Consisting of, relating to, or being in water; living or growing in, or near the water. An organism that lives in, on, or near the water.

Aquifer: An underground layer of permeable, unconsolidated sediments or porous or fractured bedrock that yields usable quantities of water to a well or spring.

Archeological Resources Protection Act of 1979: Requires a permit for excavation or removal of archeological resources from public or Native American lands.

Atom: The smallest particle of an element that cannot be divided or broken up by chemical means. It consists of a central core of protons and neutrons, called the nucleus. Electrons revolve in orbits in the region surrounding the nucleus.

Atomic Energy Act: The Atomic Energy Act of 1954 is a United States Federal law that is, according to the Nuclear Regulatory Commission, “the fundamental U.S. law on both the civilian and the military uses of nuclear materials.” It covers the laws for the “development and the regulation of the uses of nuclear materials and facilities in the United States.” It was an amendment to the Atomic Energy Act of 1946 and substantially refined certain aspects of the law, including increased support for the possibility of a civilian nuclear industry.

Attainment: An area is deemed in attainment by the U.S. Environmental Protection Agency (EPA) when the air quality is monitored and the resultant concentrations are found to be consistently below the National Ambient Air Quality Standards (NAAQS). Areas can be in attainment for some pollutants, while designated as nonattainment for others. Some areas are designated as “maintenance” areas. These are regions that were initially designated as nonattainment or unclassifiable and have since attained compliance with the NAAQS.

Attenuation: The reduction in the level of sound.

Auxiliary buildings: Auxiliary buildings house support systems, such as the ventilation system, emergency core cooling system, laundry facilities, water treatment system, and waste treatment system. An auxiliary building may also contain the emergency diesel generators and, in some pressurized water reactors, the fuel storage facility. The facility's control room is often located in the auxiliary building.

Avian: Of, relating to, or characteristic of birds.

Barrel: A unit of volume equal to 42 U.S. gallons.

Background radiation: Radiation from cosmic sources; naturally occurring radioactive material, including radon (except as a decay product of source or special nuclear material); and global fallout as it exists in the environment from the testing of nuclear explosive devices or from past nuclear accidents such as Chernobyl and are not under the control of the licensee. Background radiation does not include radiation from sources, by-products, or special nuclear materials regulated by the Commission.

Becquerel: The unit of radioactive decay equal to 1 disintegration per second. 37 billion (3.7×10^{10}) becquerels = 1 curie (Ci).

BEIR reports: Series of reports issued by the National Research Council to advise the Federal government on the relationship between exposure to ionizing radiation and human health. BEIR stands for Biological Effects of Ionizing Radiation.

Benthic: Of, relating to, or occurring at the bottom of a body of water.

Best Available Control Technology (BACT): A pollution control standard created by the U.S. Environmental Protection Agency that is used to determine what air pollution control technology will be used to control a specific pollutant to a specified limit.

Best management practices: A practice or combination of practices that are determined to provide the most effective, environmentally sound, and economically feasible means of managing an activity and mitigating its impacts.

Beta particle: An electron that is ejected from the nucleus of a radioactive atom. It is much lighter than an alpha particle and can travel a longer distance in air compared to an alpha particle, but can still be stopped by a thin sheet of aluminum foil.

Bioavailability: A contaminant existing in a form that can be taken up by living organisms.

Biocide: A chemical agent, such as a pesticide, that is used to kill and control living organisms.

Biomass: Organic nonfossil material of biological origin constituting a renewable energy source.

Biota: The combined flora and fauna of a region.

Bituminous coal: A dense black or brown coal that has, on average 45–86 percent carbon by weight and a heating value as much as five times greater than lignite coal. U.S. deposits are 100–300 million years old and are found primarily in the states of West Virginia, Kentucky, and Pennsylvania, with lesser amounts in the Midwest. Bituminous coal is the most abundant rank of coal in the United States. It is used primarily to produce electricity, and in the industrial sector, to produce heat and process steam and as a starting material for the production of coke, an intensely hot-burning derivative fuel used in the steel industry.

Blast furnace: A furnace in which solid fuel (coke) is burned with an air blast to smelt ore.

Blowdown: Continual or periodic purging of a circulating working fluid to prevent buildup of impurities in the fluid.

Boiler: A device for generating steam for power, processing, or heating purposes; or hot water for heating purposes or hot water supply. Heat from an external combustion source is transmitted to a fluid contained within the tubes found in the boiler shell. This fluid is delivered to an end-use at a desired pressure, temperature, and quality.

Boiling water reactor (BWR): A reactor in which water, used as both coolant and moderator, boils in the core to produce steam, which drives a turbine connected to an electrical generator, thereby producing electricity.

Brownfield site: Abandoned, idled, or under-used industrial and commercial facilities in which expansion or redevelopment is sometimes complicated by real or perceived environmental contaminations. (See also greenfield site).

Btu: British thermal unit. A measure of the energy required to raise the temperature of one pound of water by one degree Fahrenheit.

Burnup spent fuel: See spent fuel burnup.

Cap and trade: An environmental policy instrument used by governments to limit the amount of pollutants emitted to the environment. The total emissions are capped at a specified level but polluters can trade the emission allowances among themselves as long as the total amount is not exceeded.

Capacity: See generator capacity.

Capacity factor: The actual energy output of an electricity-generating device divided by the energy output that would be produced if it operated at its rated power output for the entire year. Generally expressed as percentage.

Capacity rating: See rated power.

Carbon: A naturally abundant nonmetallic element that occurs in many inorganic and in all organic compounds, which exists freely as graphite and diamond and as a constituent of coal, limestone, and petroleum. Carbon is capable of chemical self-bonding to form an enormous number of chemically, biologically, and commercially important molecules. Carbon's atomic number is 6.

Carbon capture and storage: Refers to the capture of carbon dioxide generated at fossil-fueled power plants and storing of carbon dioxide so it is not released into the air. Underground storage media are being investigated for this (e.g., abandoned mines, depleted oil or natural gas fields, and other types of geologic media).

Carbon monoxide (CO): A colorless, odorless gas formed when carbon in fuel is not burned completely. Motor vehicle exhaust is a major contributor to nationwide CO emissions, followed by other engines and vehicles. CO interferes with the blood's ability to carry oxygen to the body's tissues and results in numerous adverse health effects. CO is listed as a criteria air pollutant under Title I of the Clean Air Act.

Carbonaceous: Consisting of, containing, relating to, or yielding carbon.

Carbon sequestration: See carbon capture and storage.

Carcinogenesis: The process by which normal cells are transformed into cancer cells.

Cask: A heavily shielded container used to store and/or ship radioactive materials. Lead and steel are common materials used in the manufacture of casks.

Category 1 issue: Environmental impact issues that meet all of the following criteria: (1) the environmental impacts associated with the issue have been determined to apply either to all nuclear plants or, for some issues, to nuclear plants that have a specific type of cooling system or other specified plant or site characteristics; (2) a single significance level (i.e., small, moderate, or large) has been assigned to the impacts (except for collective offsite radiological impacts from the fuel cycle and from high-level waste and spent fuel disposal); (3) mitigation of adverse impacts associated with the issue has been considered in the analysis, and it has been determined that additional plant-specific mitigation measures are likely not to be sufficiently beneficial to warrant implementation. For issues that meet the three Category 1 criteria, no additional plant-specific analysis is required in future Supplemental Environmental Impact Statements (SEISs) unless new and significant information is identified.

Category 2 issue: Environmental impact issues that do not meet one or more of the criteria of Category 1, and, therefore, additional plant-specific review for these issues is required.

Cesium: A metal that may be stable (nonradioactive) or unstable (radioactive). The most common radioactive form of cesium is cesium-137. Another fairly common radioisotope is cesium-134. Cesium-137 is much more significant as an environmental contaminant than cesium-134.

Chain reaction: A reaction that initiates its own repetition. In a fission chain reaction, a fissionable nucleus absorbs a neutron and fissions spontaneously, releasing additional neutrons. These, in turn, can be absorbed by other fissionable nuclei, releasing still more neutrons. A fission chain reaction is self-sustaining when the number of neutrons released in a given time equals or exceeds the number of neutrons lost by absorption in nonfissionable material or by escape from the system.

Chlorinated hydrocarbons: Organic compounds made up of atoms of carbon, hydrogen, and chlorine. All chlorinated hydrocarbons have a carbon-chlorine bond. Sometimes hydrogen is not present at all, as in carbon tetrachloride (CCl_4). Examples of chlorinated hydrocarbons include dichloro-diphenyl-trichloroethane (DDT) and polychlorinated biphenyls (PCBs). Chlorinated hydrocarbons tend to be very long-lived and persistent in the environment; they tend to be toxic; and they tend to accumulate in the food web and undergo biological amplification.

Chronic effects: Effects resulting from exposure to low levels of a stressing factor (e.g., contaminant, disease, electromagnetic field, noise, and radionuclides) over long periods.

Chronic radiation exposure: Long-term, low-level overexposure to radiation or radioactive materials.

Cladding: The thin-walled metal tube that forms the outer jacket of a nuclear fuel rod. It prevents corrosion of the fuel by the coolant and the release of fission products into the coolant. Aluminum, stainless steel, and zirconium alloys are common cladding materials.

Class I areas (Clean Air Act): Class I areas are Federally owned properties for which air quality-related values are highly prized and for which no diminution of air quality, including visibility, can be tolerated. Class I areas fall under the stewardship of four Federal agencies: the Bureau of Land Management, National Park Service, U.S. Fish and Wildlife Service, and the U.S. Forest Service. Air quality impacts in Class I areas are strictly limited, while restrictions in Class II areas are less strict.

Class II areas (Clean Air Act): See Class I areas.

Class 2B carcinogenic: Agents (e.g., electromagnetic fields [EMFs]) or substances that are possibly carcinogenic to humans.

Clean Air Act (CAA): Establishes national ambient air quality standards and requires facilities to comply with emission limits or reduction limits stipulated in State Implementation Plans (SIPs). Under this act, construction and operating permits, as well as reviews of new stationary sources and major modifications to existing sources, are required. The Act also prohibits the Federal government from approving actions that do not conform to SIPs.

Clean coal technologies: Technologies that would allow the continued use of coal (or coal-derived synthetic fuels) for electricity production, while at the same time, mitigating the potential adverse impacts to air quality and guaranteeing compliance with regulatory requirements. Clean coal initiatives include coal-cleaning processes to remove constituents that would ultimately be converted to problematic pollutants during combustion, synthesis of clean derivative fuels through coal gasification technologies, improved combustion technologies, and improved devices, and ancillary support systems for capturing and sequestering pollutants.

Clean Water Act (CWA): Act requiring National Pollutant Discharge Elimination System (NPDES) permits for discharges of effluents to surface waters, permits for stormwater discharges related to industrial activity, and notification of oil discharges to navigable waters of the United States.

Climatology: The meteorological study of climates and their phenomena.

Closed-cycle cooling: In this type of cooling water system, the cooling water is recirculated through the condenser after the waste heat is removed by dissipation to the atmosphere, usually by circulating the water through large cooling towers constructed for that purpose.

Coal: A readily combustible black or brownish-black rock whose composition, including inherent moisture, consists of more than 50 percent by weight and more than 70 percent by volume of carbonaceous material. It is formed from plant remains that have been compacted, hardened, chemically altered, and metamorphosed by heat and pressure over geologic time.

Coal bed methane: Methane is generated during coal formation and is contained in the coal microstructure. Typical recovery entails pumping water out of the coal to allow the gas to escape. Methane is the principal component of natural gas. Coal bed methane can be added to natural gas pipelines without any special treatment.

Coal combustion wastes: Wastes produced from the combustion of coal, which contains concentrated levels of numerous contaminants, particularly metals like arsenic, mercury, lead, chromium, cadmium, and radioactive elements found naturally in coal.

Coal gasification: The process of converting coal into gas. The basic process involves crushing coal to a powder, which is then heated in the presence of steam and oxygen to produce a gas. The gas is then refined to reduce sulfur and other impurities. The gas can be used as a fuel or processed further and concentrated into chemical or liquid fuel.

Coal-producing regions: *Appalachian Region*: Alabama, Georgia, eastern Kentucky, Maryland, North Carolina, Ohio, Pennsylvania, Tennessee, Virginia, and West Virginia; *Interior Region (with Gulf Coast)*: Arkansas, Illinois, Indiana, Iowa, Kansas, Louisiana, Michigan, Mississippi, Missouri, Oklahoma, Texas, and western Kentucky; *Western Region*: Alaska, Arizona, Colorado, Montana, New Mexico, North Dakota, Utah, Washington, and Wyoming. *Note:* Some States discontinue producing coal as reserves are depleted or as production becomes uneconomical.

Coal rank: The classification of coals according to their degree of progressive alteration from lignite to anthracite. In the United States, the standard ranks of coal include lignite, sub-bituminous coal, bituminous coal, and anthracite, and are based on fixed carbon, volatile matter, heating value, and agglomerating (or caking) properties.

Coal seam: A deposit of coal.

Coal synfuel: Any liquid fuel obtained from coal.

Coal washing: The process of removing noncombustible materials, sulfur, mercury, and other contaminants from coal. Coal washing involves grinding the coal into smaller pieces and separating materials according to density. One coal-washing technique involves feeding the coal into barrels that contain a fluid with a density that causes the coal to float, while unwanted material sinks and is removed from the fuel mix.

***Code of Federal Regulations (CFR)*:** The codification of the general and permanent rules published in the *Federal Register* by the executive departments and agencies of the Federal government. It is divided into 50 titles that represent broad areas subject to Federal regulation. Each volume of the CFR is updated once each calendar year and is issued on a quarterly basis.

Co-firing: The process of burning natural gas in conjunction with another fuel to reduce air pollutants.

Coke: A solid carbonaceous residue derived from low-ash, low-sulfur bituminous coal from which the volatile constituents are driven off by baking in an oven at temperatures as high as 2000°F so that the fixed carbon and residual ash are fused together. Coke is used as a fuel and as a reducing agent in smelting iron ore in a blast furnace. Coke from coal is gray, hard, and porous and has a heating value of 24.8 million Btu per ton.

Cold shutdown: The term used to define a reactor coolant system at atmospheric pressure and at a temperature below 200°F following a reactor cooldown.

Collective dose: The sum of the individual doses received in a given period by a specified population from exposure to a specified source of radiation.

Combined cycle: A technology through which electricity is produced from otherwise lost waste heat exiting from one or more gas (combustion) turbines. The exiting heat is routed to a conventional boiler or to a heat recovery steam generator for utilization by a steam turbine in the production of electricity. This process increases the efficiency of the electric generating unit.

Combustion: Chemical oxidation accompanied by the generation of light and heat.

Committed dose equivalent: The dose equivalent to organs or tissues of reference that will be received from an intake of radioactive material by an individual during the 50-year period following the intake.

Compact: A group of two or more States formed to dispose of low-level radioactive waste on a regional basis. The Low-Level Radioactive Waste Policy Act of 1980 encouraged States to form compacts to ensure continuing low-level waste disposal capacity. As of December 2000, 44 States have formed 10 compacts. No compact has successfully sited and constructed a disposal facility.

Condenser: A large heat exchanger designed to cool exhaust steam from a turbine below the boiling point so that it can be returned to the heat source as water. In a pressurized water reactor, the water is returned to the steam generator. In a boiling water reactor, it returns to the reactor core. The heat removed from the steam by the condenser is transferred to a circulating water system and is exhausted to the environment, either through a cooling tower or directly into a body of water.

Coniferous: Of or relating to or part of trees or shrubs bearing cones and evergreen leaves.

Containment or reactor building: The containment or reactor building in a pressurized water reactor (PWR) is a massive concrete or steel structure that houses the reactor vessel, reactor coolant piping and pumps, steam generators, pressurizer, pumps, and associated piping. The reactor building structure of a BWR generally includes a containment structure and a shield building. The BWR containment reactor building is a massive concrete or steel structure that houses the reactor vessel, the reactor coolant piping and pumps, and the suppression pool. It is located inside a somewhat less substantive structure called the shield building. The shield building for a BWR also generally contains the spent fuel pool and the new fuel pool. The reactor building for both PWRs and BWRs is designed to withstand natural disasters, such as hurricanes and earthquakes. The containment's ability to withstand such events and to contain the effects of accidents initiated by system failures constitutes the principal protection against releasing radioactive material to the environment.

Cooling pond: A natural or man-made body of water that is used for dissipating waste heat from power plants.

Cooling tower: Structures designed to remove excess heat from the condenser without dumping the heated cooling water directly into water bodies, such as lakes or rivers. There are two principal types of cooling towers: mechanical draft towers and natural draft towers. Most nuclear plants that have once-through cooling do not rely on cooling towers. However, five facilities with once-through cooling also have cooling towers.

Cooling tower drift: Water lost from a cooling tower in the form of liquid droplets entrained in the exhaust air. Drift is independent of water lost through evaporation. Units may be in lbs/hr or a percentage of circulating water flow. Drift eliminators control this loss from the tower.

Cooling-water intake structure: The structure and any associated constructed waterways used to withdraw cooling water from water bodies. The cooling water intake structure extends from the point at which water is withdrawn from the surface water source to the first intake pump or series of pumps.

Corona discharge: The electrical breakdown of air into charged particles that results in the creation of ions or charged particles in air due to electric field discharge near transmission lines, most noticeable during thunder or rain storms. Corona is a phenomenon associated with all energized transmission lines. It is the electrical breakdown of air into charged particles. The phenomenon appears as a bluish-purple glow on the surface of and adjacent to a conductor when the voltage gradient exceeds a certain critical value, thereby producing light, audible noise (described as crackling or hissing), and ozone.

Council on Environmental Quality (CEQ): Established by the National Environmental Policy Act (NEPA). Council on Environmental Quality regulations (40 CFR Parts 1500–1508) describe the process for implementing NEPA, including preparation of environmental assessments and environmental impact statements, and the timing and extent of public participation.

Criteria pollutants: A group of very common air pollutants whose presence in the environment is regulated by the EPA on the basis of certain criteria (information on health and/or environmental effects of pollution). Criteria air pollutants are widely distributed all over the United States. There are six common air pollutants for which National Ambient Air Quality Standards have been established by the EPA under Title I of the Clean Air Act: sulfur dioxide, nitrogen oxides, carbon monoxide, ozone, particulate matter ($PM_{2.5}$ and PM_{10}), and lead. Standards were developed for these pollutants on the basis of scientific knowledge about their health and environmental effects.

Critical habitat: Specific geographic areas, whether occupied by a listed species or not, that are essential for its conservation and that have been formally designated by rules published in the *Federal Register*.

Criticality: A term used in reactor physics to describe the state when the number of neutrons released by fission is exactly balanced by the neutrons being absorbed (by the fuel and poisons) and escaping the reactor core. A reactor is said to be “critical” when it achieves a self-sustaining nuclear chain reaction, as when the reactor is operating.

Crude oil: A mixture of hydrocarbons that exists in liquid phase in natural underground reservoirs and remains liquid at atmospheric pressure after passing through surface separating facilities. Depending upon the characteristics of the crude stream, it may also include: (1) small amounts of hydrocarbons that exist in the gaseous phase in natural underground reservoirs but are liquid at atmospheric pressure; (2) small amounts of nonhydrocarbons produced with the oil, such as sulfur and various metals, and (3) drip gases and liquid hydrocarbons produced from tar sands, oil sands, gilsonite, and oil shale.

Cultural Resources: The physical remains of past human activities that have historic or cultural meaning. They include archaeological sites (e.g., prehistoric campsites and villages), historic-era resources (e.g., farmsteads, forts, and canals), and traditional cultural properties (e.g., resource collection areas and sacred areas).

Cumulative dose: The total dose resulting from repeated or prolonged exposures to ionizing radiation over time.

Cumulative impacts: The impacts on the environment that result from the incremental impact of an action when added to other past, present, and reasonably foreseeable future actions, regardless of what agency (Federal or nonfederal) or person undertakes such other actions. See also Impacts significance levels.

Cumulative risk: The risk of a common toxic effect associated with concurrent exposure by all relevant pathways and routes of exposure to a group of chemicals that share a common mechanism of toxicity.

Curie (Ci): The basic unit used to describe the intensity of radioactivity in a sample of material. The curie is equal to 37 billion (3.7×10^{10}) disintegrations per second, which is approximately the activity of 1 gram of radium. A curie is also a quantity of any radionuclide that decays at a rate of 37 billion disintegrations per second. It is named for Marie and Pierre Curie, who discovered radium in 1898.

Decibel, A-weighted [dB(A)]: A standard unit for the measure of the relative loudness or intensity of sound. The relative intensity is the ratio of the intensity of a sound wave to a reference intensity. In general, a sound doubles in loudness with every increase of 10 dB. By convention, the intensity level of sound at the threshold of hearing for a young healthy individual is 0 dB.

Deciduous: Trees and shrubs that shed their leaves on an annual cycle.

Decommissioning: The process of closing down a facility followed by reducing residual radioactivity to a level that permits the release of the property for unrestricted use or restricted use (see 10 CFR 20.1003).

DECON: A method of decommissioning in which the equipment, structures, and portions of a facility and site containing radioactive contaminants are removed and safety buried in a low-level radioactive waste landfill or decontaminated to a level that permits the property to be released for unrestricted use shortly after cessation of operations.

Decontamination: Removal of unwanted radioactive or hazardous contamination by a chemical or mechanical process.

Deep-dose equivalent: The dose equivalent at a tissue depth of 1 cm; applies to external whole-body exposure.

Demand-side management (DSM): The planning, implementation, and monitoring of utility activities designed to encourage consumers to modify patterns of electricity usage, including the timing and level of electricity demand. It only refers to energy and load-shape modifying activities that are undertaken in response to utility-administered programs. It does not refer to energy and load-shaped changes arising from the normal operation of the marketplace or from government-mandated energy-efficiency standards. DSM covers the complete range of load-shape objectives, including strategic conservation and load management, as well as strategic load growth.

Demographics: A term used to describe specific population characteristics such as age, gender, education, and income level.

Densitometer: An apparatus for measuring the optical density of a material, such as a photographic negative.

Depleted uranium: Uranium having a percentage of uranium-235 smaller than the 0.7 percent found in natural uranium. It results from uranium isotope enrichment operations.

Deposition: The laying down of matter by a natural process (e.g., the settling of particulate matter out of air or water onto soil or sediment surfaces).

Design-basis accident: A postulated accident that a nuclear facility must be designed and built to withstand without loss to the systems, structures, and components necessary to ensure public health and safety.

Desquamation: To shed, peel, or come off in scales.

Detritus: Dead, decaying plant material.

Dewatering: To remove or drain water from an area.

Dielectric: A nonconductor of electricity.

Diesel generator: An electric generator that runs on diesel fuel.

Diffusion: A process in which substances are transported from one area to another due to differences in the concentration of that material or in temperature.

Disposal: The act of placing unwanted materials in an area with the intent of not recovering in the future.

Dissolved gas: Gas dissolved in water or in other liquid without change in its chemical structure.

Dissolved oxygen: Oxygen dissolved in water. Dissolved oxygen is necessary for the life of fish and most other aquatic organisms, and is one of the most important indicators of the condition of a water body.

DNA (deoxyribonucleic acid): One of two types of molecules that encode genetic information (the other is ribonucleic acid [RNA]). In humans, DNA is the genetic material, and RNA is transcribed from it. In some other organisms, RNA is the genetic material and, in reverse fashion, the DNA is transcribed from it.

Dose: The absorbed dose, given in rads (or in SI units, grays), that represents the energy absorbed from the radiation in a gram of any material. The biological dose or dose equivalent, given in rem or sieverts, is a measure of the biological damage to living tissue from radiation exposure.

Dose equivalent: The product of the absorbed dose in tissue, quality factor, and all other modifying factors at the location of interest. The units of dose equivalent are the rem and sievert (Sv).

Dose rates: The ionizing radiation dose delivered per unit of time (e.g., rem or sieverts per hour).

Dosimeter: A small, portable instrument (such as a film badge or thermoluminescent or pocket dosimeter) for measuring and recording the total accumulated personal dose of ionizing radiation.

Dredging: Removing accumulated sediments from a water body to increase depth or remove contaminants.

Dry cask: Large, rugged container made of steel or steel-reinforced concrete, 18 or more inches thick. A cask uses materials like steel, concrete and lead – instead of water – as a radiation shield. Depending on the design, a dry cask can hold from 7 to 56 twelve-foot-long fuel assemblies.

Dry cask storage: A method for storing spent nuclear fuel (see dry cask).

Dry steam: Geothermal plants that use the steam from the geothermal reservoir as it comes from wells, and route it directly through turbine/generator units to produce electricity.

Dual-fired unit: A generating unit that can produce electricity using two or more input fuels. In some of these units, only the primary fuel can be used continuously; the alternate fuel(s) can be used only as a start-up fuel or in emergencies.

Ecoregion: A geographically distinct area of land that is characterized by a distinctive climate, ecological features, and plant and animal communities.

Ecosystem: A group of organisms and their physical environment interacting and functioning as a unit.

Effective dose equivalent: The sum of the products of the dose equivalent to the organ or tissue and the weighting factors applicable to each of the body organs or tissues that are irradiated.

Effluent: Wastewater (treated or untreated) that flows out of a treatment plant, sewer, or industrial outfall. This term generally refers to wastes discharged into surface waters.

Electric power: The rate at which electric energy is transferred. Electric power is measured by capacity and is commonly expressed in megawatts (MW).

Electric power grid: A system of synchronized power providers and consumers connected by transmission and distribution lines and operated by one or more control centers. In the continental United States, the electric power grid consists of three systems: the Eastern Interconnect, the Western Interconnect, and the Texas Interconnect. In Alaska and Hawaii, several systems encompass areas smaller than the State (e.g., the interconnect serving Anchorage, Fairbanks, and the Kenai Peninsula).

Electricity: A form of energy characterized by the presence and motion of elementary charged particles generated by friction, induction, or chemical change.

Electricity generation: The process of producing electric energy or the amount of electric energy produced by transforming other forms of energy, commonly expressed in kilowatt hours (kWh) or megawatt hours (MWh).

Electromagnetic fields: The field of energy resulting from the movement of alternating electric current (AC) along the path of a conductor, composed of both electrical and magnetic components and existing in the immediate vicinity of, and surrounding, the electric conductor. Electromagnetic fields exist in both high-voltage electric transmission power lines and in low-voltage electric conductors in homes and appliances.

Electromagnetic radiation: A traveling wave motion resulting from changing electric or magnetic fields. Familiar electromagnetic radiation ranges from x-rays (and gamma rays) of short wavelength, through the ultraviolet, visible, and infrared regions, to radar and radio waves of relatively long wavelength.

Endangered species: Any species, plant or animal, that is in danger of extinction throughout all or a significant part of its range. Requirements for declaring a species endangered are found in the Endangered Species Act.

Endangered Species Act of 1973 (ESA): Requires consultation with the U.S. Fish and Wildlife Service and/or the National Marine Fisheries Service to determine whether endangered or threatened species or their habitats will be affected by a proposed activity and what, if any, mitigation measures are needed to address the impacts.

Energy: The capacity for doing work as measured by the capability of doing work (potential energy) or the conversion of this capability to motion (kinetic energy). Energy has several forms, some of which are easily convertible and can be changed to another form useful for work. Most of the world's convertible energy comes from fossil fuels that are burned to produce heat that is then used as a transfer medium to mechanical or other means in order to accomplish tasks. Electrical energy is usually measured in kilowatt hours, while heat energy is usually measured in British thermal units (Btu).

Energy demand: The energy needed by consumers at any point in time for household, business, or industrial purposes.

Energy Information Administration (EIA): An independent agency within the U.S. Department of Energy (DOE) that develops surveys, collects energy data, and analyzes and models energy issues. The EIA must meet (1) the requests of Congress, other elements within the DOE, Federal Energy Regulatory Commission, and Executive Branch; (2) its own independent needs; and (3) assist the general public or other interest groups, without taking a policy position.

Energy supply: Energy made available for use. Supply can be considered and measured from the point of view of the energy provider or the receiver.

ENTOMB: A method of decommissioning nuclear facilities in which radioactive contaminants are encased in a structurally long-lived material, such as concrete. The entombment structure is appropriately maintained and continued surveillance is carried out until the radioactivity decays to a level permitting unrestricted release of the property.

Entrainment: The incorporation of fish, eggs, larvae, and other plankton with intake water-flow entering and passing through a cooling water intake structure and into a cooling water system.

Environmental Assessment: (EA): A concise public document that a Federal agency prepares under the National Environmental Policy Act to provide sufficient evidence and analysis to determine whether a proposed action requires preparation of an environmental impact statement or whether a Finding of No Significant Impact can be issued. An EA must include brief discussions on the need for the proposal, the alternatives, and the environmental impacts of the proposed action and alternatives.

Environmental Impact Statement (EIS): A document required of Federal agencies by the National Environmental Policy Act for major proposals or legislation that will or could significantly affect the environment.

Environmental Justice: The fair treatment of people of all races, cultures, incomes, and educational levels with respect to the development, implementation, and enforcement of environmental laws, regulations, and policies.

Erythema: Superficial reddening of the skin due to the dilatation of blood vessels. Erythema is often a sign of infection or inflammation.

Essential Fish Habitat (EFH): Those waters and substrates necessary to fish for spawning, breeding, feeding or growth to maturity. EFH is protected under the Magnuson-Stevens Fishery Conservation and Management Act of 1976.

Estuary: A transitional zone along the coastline where ocean saltwater mixes with freshwater from the land, subject to tidal influences. Estuaries are often semi-enclosed by land, but their currents always have access to the open ocean.

Eutrophication: A condition in an aquatic ecosystem where high nutrient concentrations stimulate blooms of algae (e.g., phytoplankton). Algal decomposition may lower dissolved oxygen concentrations. Although eutrophication is a natural process in the aging of lakes and some estuaries, it can be accelerated by both point and nonpoint sources of nutrients.

Exceedance probability: The average frequency with which an event (e.g., flood) of a particular magnitude will be exceeded during a certain length of time. Expressed as the probability that a level will be exceeded in any year (the annual exceedance probability) or as the average recurrence interval (e.g, a 100-year flood).

Exposure: Being exposed to ionizing radiation, radioactive material, or other contaminants.

External dose: That portion of the dose equivalent received from radiation sources outside the body.

Fecundity: Number of eggs an animal produces during each reproductive cycle; the potential reproductive capacity of an organism or population.

Federal Energy Regulatory Commission (FERC): Independent Federal agency with jurisdiction over interstate electricity sales, wholesale electric rates, hydroelectric licensing, natural gas pricing, and oil pipeline rates.

***Federal Register*:** The official daily publication for rules, proposed rules, and notices of Federal agencies and organizations, as well as Executive Orders and other presidential documents.

Film badge: Photographic film used to measure ionizing radiation exposure for personnel monitoring purposes. The film badge may contain two or three films of differing sensitivities, and it may also contain a filter that shields part of the film from certain types of radiation.

Fission: The splitting of a nucleus into at least two other nuclei and the release of a relatively large amount of energy. Two or three neutrons are usually released during this type of transformation.

Fission products: The radioactive isotopes formed by the fission of heavy elements.

Floodplain: Low lands adjoining the channel of a river, stream, or watercourse; or ocean, lake, or other body of water, which have been or may be inundated by flood water, and those other areas subject to flooding.

Flue gas: The air coming out of a chimney after combustion in the burner it is venting. It can include nitrogen oxides, carbon oxides, water vapor, sulfur oxides, particles, and many chemical pollutants.

Flue gas desulfurization: Equipment (also referred to as scrubbers) used to remove sulfur oxides from the combustion gases of a boiler plant before discharge to the atmosphere. Chemicals such as lime are used as scrubbing media.

Fluidized-bed combustion: A method of burning particulate fuel, such as coal, in which the amount of air required for combustion far exceeds that found in conventional burners. The fuel particles are continually fed into a bed of mineral ash in the proportions of 1 part fuel to 200 parts ash, while a flow of air passes up through the bed, causing it to act like a turbulent fluid.

Fossil fuel: Fuel derived from ancient organic remains such as peat, coal, crude oil, and natural gas.

Fossil fuel plant: A plant using coal, petroleum, or gas as its source of energy.

Fossil-fuel electric (power) generation: Electric generation in which the prime mover is a turbine rotated by high-pressure steam produced in a boiler by heat from burning fossil fuels.

Fuel: Any material substance that can be consumed to supply heat or power. Includes petroleum, coal, and natural gas (the fossil fuels), and other consumable materials, such as uranium, biomass, and hydrogen.

Fuel assembly: A cluster of fuel rods (or plates) that are also called fuel pins or fuel elements. Many fuel assemblies make up a reactor core.

Fuel cladding: See cladding.

Fuel cycle: The entire set of sequential processes or stages involved in the utilization of fuel, including extraction, transformation, transportation, and combustion. Emissions generally occur at each stage of the fuel cycle.

Fuel oil: A liquid petroleum product less volatile than gasoline, used as an energy source. Fuel oil includes distillate fuel oil (No. 1, No. 2, and No. 4), and residual fuel oil (No. 5 and No. 6).

Fuel pellets: As used in pressurized water reactors and boiling water reactors, a pellet is a small cylinder approximately 3/8-in. in diameter and 5/8-inch in length, consisting of uranium fuel in a ceramic form – uranium dioxide (UO_2). Typical fuel pellet enrichments in nuclear power reactors range from 2.0 percent to 3.5 percent uranium-235.

Fuel rod: A long, slender tube that holds fissionable material (fuel) for nuclear reactor use. Fuel rods are assembled into bundles called fuel elements or fuel assemblies, which are loaded individually into the reactor core.

Fugitive dust: Particulate air pollution released to the ambient air from ground-disturbing activities related to construction, manufacturing, or transportation (i.e., the discharges are not released through a confined stream such as a stack, chimney, vent, or other functionally equivalent opening). Specific activities that generate fugitive dust include, but are not limited to, land-clearing operations, travel of vehicles on disturbed land or unpaved access roads, or onsite roads.

Fugitive emissions: Unintended leaks of gas from vessels, pipes, valves, or fittings used in the processing, transmission, and/or transportation of liquids or gases. These emissions can include the release of volatile vapors from a diesel fuel, natural gas, or solvent leak.

Fujita Scale: Classifies tornadoes based on wind damage. The scale ranges from F0 for the weakest to F5 for the strongest tornadoes.

Gamma rays: High-energy, short wavelength, electromagnetic radiation emitted from the nucleus of an atom. Gamma radiation frequently accompanies alpha and beta emissions and always accompanies fission. Gamma rays are very penetrating and are best stopped or shielded by dense materials, such as lead or depleted uranium. Gamma rays are similar to x-rays. See also X-rays and gamma rays.

Gas bubble disease: A condition that occurs when aquatic organisms are exposed to water with high partial pressures of certain gases (usually nitrogen) and then subsequently are exposed to water with lower partial pressures of the same gases. Dissolved gas (especially nitrogen) within the tissues comes out of solution and forms embolisms (bubbles) within the affected tissues, most noticeably the eyes and fins.

Gas supersaturation: Concentrations of dissolved gases in water that are above the normal saturation limit.

Gas turbine: A gas turbine consists typically of an axial-flow air compressor and one or more combustion chambers where liquid or gaseous fuel is burned and the hot gases are passed to the turbine, and where the hot gases expand, drive the generator, and are then used to run the compressor.

Gasification: A method for converting coal, petroleum, biomass, wastes, or other carbon-containing materials into a gas that can be (1) burned to generate power or (2) processed into chemicals and fuels.

Generator capacity: The maximum output, commonly expressed in megawatts (MW), that generating equipment can supply to system load, adjusted for ambient conditions.

Generic Environmental Impact Statement (GEIS): A GEIS assesses the scope and impact of environmental effects that would be associated with an action at numerous sites.

Geologic repository: A deep underground engineered facility used to permanently isolate used nuclear fuel or high-level nuclear waste while its radioactivity decays safely.

Geology: The study of the materials, processes, environments, and history of the earth, including rocks and their formations and structures.

Geothermal energy: Hot water or steam extracted from geothermal reservoirs in the earth's crust. Water or steam extracted from geothermal reservoirs can be used for geothermal heat pumps, water heating, or electricity generation.

Geothermal plant: A plant in which the prime mover is a steam turbine driven either by steam produced from hot water or by natural steam that derives its energy from heat found in rock.

Global warming: An increase in the near-surface temperature of the earth. Global warming has occurred in the distant past as the result of natural influences, but the term is today most often used to refer to the warming many scientists predict will occur as a result of increased anthropogenic emissions of greenhouse gases.

Global warming potential (GWP): An index used to compare the relative radiative forcing per unit molecule or unit mass change for varied greenhouse gases of different gases without directly calculating the changes in atmospheric concentrations. The GWPs of a particular greenhouse gas are calculated as a time-integrated ratio of the radiative or climate forcing that would result from the emission of one kilogram of that greenhouse gas to that resulting from the emission of one kilogram of carbon dioxide over a fixed period of time, such as 100 years.

Gonads: Male and female sex organs (ovaries and testes).

Graphite: Pure carbon in mineral form. Technically, graphite at 100 percent carbon is the highest rank of coal. However, its relatively limited availability and physical characteristics and chemical characteristics have limited its use as an energy source. Instead, it is used primarily in lubricants.

Gray: The international system (SI) unit of absorbed dose. One gray is equal to an absorbed dose of 1 Joule/kilogram (one gray equals 100 rads) (see 10 CFR 20.1004).

Greater-than-Class C Waste (GTCC): GTCC waste means low-level radioactive waste that exceeds the concentration limits of radionuclides established for Class C waste in 10 CFR 61.55.

Greenfield site: Vacant land that has never been developed or was formerly occupied by farms or low-density development that left the land free of environmental contamination. Greenfield sites are typically located in suburban or ex-urban areas and can be less costly to develop than the brownfield sites that are often located in urban areas.

Greenhouse gases: Those gases, such as water vapor, carbon dioxide, nitrous oxide, methane, hydrofluorocarbons (HFCs), perfluorocarbons (PFCs), and sulfur hexafluoride, that are transparent to solar (short-wave) radiation but opaque to long-wave (infrared) radiation, thus preventing long-wave radiant energy from leaving the earth's atmosphere. The net effect is a trapping of absorbed radiation and a tendency to warm the planet's surface.

Grid: See electric power grid.

Gross generation: The total amount of electric energy produced by generating units and measured at the generating terminal in kilowatt hours (kWh) or megawatt hours (MWh).

Groundwater: The water found beneath the earth's surface, usually in porous rock formations (aquifers), which may supply wells and springs. Generally, it refers to all water contained in the ground.

Habitat: The place, including physical and biotic conditions, where a plant or animal lives.

Half-life: The time in which one-half of the atoms of a particular radioactive substance disintegrate into another nuclear form. Measured half-lives vary from millionths of a second to billions of years. Also called physical or radiological half-life.

Hazardous air pollutants (HAPs): Air pollutants that are not covered by ambient air quality standards but which, as defined in the Clean Air Act, may present a threat of adverse human health effects or adverse environmental effects. Such pollutants include asbestos, beryllium, mercury, benzene, coke oven emissions, radionuclides, and vinyl chloride.

Hazardous waste: A solid waste or combination of solid wastes that, because of its quantity, concentration, or physical, chemical, or infectious characteristics, may (1) cause or significantly contribute to an increase in mortality or an increase in serious irreversible or incapacitating reversible illness or (2) pose a substantial present or potential hazard to human health or the environment when improperly treated, stored, transported, disposed of, or otherwise managed (as defined in the Resource Conservation and Recovery Act, as amended, Public Law 94-580).

Heat sink: Anything that absorbs heat. It is usually part of the environment, such as the air, a river, or a lake.

Heavy metals: Metallic elements with higher atomic weights, many of which are toxic at higher concentrations. Examples are mercury, chromium, cadmium, and lead.

High-level waste (HLW): The highly radioactive material resulting from the reprocessing of spent nuclear fuel. If not reprocessed, the spent nuclear fuel is also considered high-level waste.

Horizontal axis wind turbine: The most common type of wind turbine, in which the axis of rotation is oriented horizontally.

Hydrocarbons: Any compound or mix of compounds, solids, liquids, or gases, composed of carbon and hydrogen (e.g., coal, crude oil, and natural gas).

Hydrochlorofluorocarbons (HCFCs): Chemicals composed of one or more carbon atoms and varying numbers of hydrogen, chlorine, and fluorine atoms.

Hydroelectric power: The use of flowing water to produce electrical energy.

Hydrofluorocarbons (HFCs): A group of man-made chemicals composed of one or two carbon atoms and varying numbers of hydrogen and fluorine atoms. Most HFCs have 100-year Global Warming Potentials in the thousands.

Hydrology: The study of water that considers its occurrence, properties distribution, circulation, and transport and includes groundwater, surface water, and rainfall.

IGCC: See Integrated Gasification Combined Cycle technology.

Impacting factors: The mechanisms by which an action affects a given resource or receptor.

Impingement: The entrapment of aquatic organisms on the outer part of an intake structure or against a screening device during periods of intake water withdrawal.

IMPLAN: Input-output economic models based on economic accounts showing the flow of commodities to industries from producers and institutional consumers. The accounts also show consumption activities by workers, owners of capital, and imports from outside the region.

Impulse turbine: A turbine that is driven by high-velocity jets of water or steam from a nozzle directed onto vanes or buckets attached to a wheel.

Independent spent fuel storage installation (ISFSI): An ISFSI is designed and constructed for the interim storage of spent nuclear fuel and other radioactive materials associated with spent fuel storage. ISFSIs may be located at the site of a nuclear power plant or at another location. The most common design for an ISFSI, at this time, is a concrete pad with dry casks containing spent fuel bundles. ISFSIs are used by operating plants that require increased spent fuel storage capability because their spent fuel pools have reached capacity

In situ: In its original place.

Integrated Gasification Combined Cycle (IGCC) technology: An energy generation technology in which coal, water, and oxygen are fed to a gasifier, which produces syngas. This medium-Btu gas is cleaned (particulates and sulfur compounds removed) and fed to a gas turbine. The hot exhaust of the gas turbine and heat recovered from the gasification process is routed through a heat-recovery generator to produce steam, which drives a steam turbine to produce electricity.

Internal dose: That portion of the dose equivalent received from radioactive material taken into the body.

Ionizing radiation: Any radiation capable of displacing electrons from atoms or molecules, thereby producing ions. Some examples are alpha, beta, gamma, x-rays, neutrons, and ultraviolet light. High doses of ionizing radiation may produce severe skin or tissue damage.

Isotopic enrichment: A process by which the relative abundance of the isotopes of a given element are altered, thus producing a form of the element that has been enriched in one particular isotope and depleted in its other isotopic forms.

Landfill gas: Gas that is generated by decomposition of organic material at landfill disposal sites. The average composition of landfill gas is approximately 50 percent methane and 50 percent carbon dioxide and water vapor by volume. The methane percentage, however, can vary from 40 to 60 percent, depending on several factors including waste composition (e.g., carbohydrate and cellulose content). The methane in landfill gas may be vented, flared, or combusted to generate electricity or heat, or injected into a pipeline for combustion elsewhere.

Leachate: The liquid that has percolated through the soil or other medium.

License renewal: Renewal of the operating license of a nuclear power plant.

License renewal term: That period of time past the original or current license term for which the renewed license is in force. Although the length of license renewal terms can vary, they cannot exceed 20 years.

Licensee: The entity (usually an energy company) that holds the license to operate a nuclear power plant.

Light water reactors (LWRs): Reactors that use ordinary water as coolant, including BWRs and PWRs, the most common types used in the United States.

Lignite coal: Also referred to as brown coal, it is the youngest and lowest rank coal with respect to its value as an energy source. Lignite coal deposits are relatively young and have not experienced extremes of heat and pressure as have higher ranks of coal. On average, lignite coals contain 25–35 percent by weight carbon. They represent about 7 percent of the U.S. annual coal production and are used primarily to produce electricity.

Load shape: A method of describing peak load demand and the relationship of power supplied to the time of occurrence.

Lower limit of detection (LLD): The lowest limit that a detector can measure.

Lowest-observed-effects-level (LOEL): The lowest exposure level at which there are statistically or biologically significant increases in frequency or severity of an effect between the exposed population and its appropriate control group.

Low-income populations: Persons whose average family income is below the poverty line. The poverty line takes into account family size and age of individuals in the family. In 1999, the poverty line for a family of five with three children below the age of 18 was $19,882. For any family below the poverty line, all family members are considered to be below the poverty line.

Low-level radioactive waste (LLW): A general term for a wide range of wastes having low levels of radioactivity. Nuclear fuel cycle facilities (e.g., nuclear power reactors and fuel fabrication plants) that use radioactive materials generate low-level wastes as part of their normal operations. These wastes are generated in many physical and chemical forms and levels of contamination (see 10 CFR 61.2). Low-level radioactive wastes containing source, special nuclear, or by-product material are acceptable for disposal in a land disposal facility. For the purposes of this definition, low-level waste has the same meaning as in the Low-Level Radioactive Waste Policy Act, that is, radioactive waste not classified as high-level radioactive waste, transuranic waste, spent nuclear fuel, or by-product material as defined in Section 11e.(2) of the Atomic Energy Act (uranium or thorium tailings and waste).

Macroinvertebrates: Nonplanktonic, aquatic invertebrates, including insects, crustaceans, mollusks, and worms, which typically inhabit the bottom sediments of rivers, ponds, lakes, wetlands, or oceans. Their abundance and diversity are often used as an indicator of ecosystem health.

Maintenance areas: Regions that were initially designated as nonattainment or unclassifiable and have since attained compliance with the National Ambient Air Quality Standards. The Clean Air Act outlines several conditions that must be met before an area can be reclassified from nonattainment to an attainment maintenance area, one of which is the development and EPA approval of a maintenance plan.

Man-rem: See person-rem.

Marine: Of or pertaining to ocean environments.

Maximally exposed individual (MEI): A hypothetical individual who, because of proximity, activities, or living habits, could potentially receive the maximum possible dose of radiation or of a hazardous chemical from a given event or process.

Maximum Achievable Control Technology (MACT): The emission standard for sources of air pollution requiring the maximum reduction of hazardous emissions, taking cost and feasibility into account. Under the Clean Air Act Amendments of 1990, the MACT must not be less than the average emission level achieved by controls on the best performing 12 percent of existing sources, by category of industrial and utility sources.

Mechanical draft tower: Cooling tower system that sprays heated cooling water downward, while large fans pull air across the dropping water to remove the heat. As the water drops downward onto the slats in the cooling tower, the drops break up into a finer spray, and, thus, facilitate cooling.

Methane: A colorless, flammable, odorless hydrocarbon gas (CH_4), which is the major component of natural gas. Methane is an important source of hydrogen in various industrial processes. Methane is a greenhouse gas.

Methyl tertiary butyl ether (MTBE): A gasoline additive, an oxygenate produced by reacting methanol with isobutylene.

Microorganism: An organism that can be seen only through a microscope. Microorganisms include bacteria, protozoa, algae, and fungi.

Minority populations: Include American Indian or Alaskan Native; Asian; Native Hawaiian or other Pacific Islander; Black races; or people of Hispanic ethnicity. "Other" races and multiracial individuals may be considered as separate minorities.

Mitigation: A method or process by which impacts from actions can be made less injurious to the environment through appropriate protective measures.

Mixed waste: Waste that contains both radioactive and hazardous constituents.

Motile: Moving or having the power to move.

Municipal solid waste (MSW): Residential solid waste and some nonhazardous commercial, institutional, and industrial wastes.

National Ambient Air Quality Standards (NAAQS): Air quality standards established by the Clean Air Act, as amended. The primary NAAQS specify maximum outdoor air concentrations of criteria pollutants that would protect the public health within an adequate margin of safety. The secondary NAAQS specify maximum concentrations that would protect the public welfare from any known or anticipated adverse effects of a pollutant.

National Environmental Policy Act of 1969 (NEPA): Act requiring Federal agencies to prepare a detailed statement on the environmental impacts of their proposed major actions that may significantly affect the quality of the human environment.

National Historic Preservation Act (NHPA) of 1966, as amended: The primary law that addresses the impacts of Federal undertakings on archaeological or historic resources. Undertakings are defined in the NHPA as any project or activity that is funded or under the direct jurisdiction of a Federal agency, or any project or activity that requires a Federal permit, license, or approval.

National Pollutant Discharge Elimination System (NPDES): A Federal and State permitting system controlling the discharge of effluents to surface water and regulated through the Clean Water Act, as amended.

Native American Graves Protection and Repatriation Act: This act established the priority for ownership or control of Native American cultural items excavated or discovered on Federal or Tribal land after 1990 and the procedures for repatriation of items in Federal possession. The act allows the intentional removal from or excavation of Native American cultural items from Federal or Tribal lands only with a permit or upon consultation with the appropriate Tribe.

Natural-draft cooling towers: Natural-draft cooling towers use the differential pressure between the relatively cold outside air and the hot humid air on the inside of the tower as the driving force to move and cool water without the use of fans.

Natural gas: A gaseous mixture of hydrocarbon compounds, the primary one being methane.

Natural Gas Combined Cycle (NGCC) technology: An advanced power generation technology that improves the fuel efficiency of natural gas. Most new gas power plants in North America and Europe use NGCC technology.

Natural gas liquids (NGL): Those hydrocarbons in natural gas that are separated from the gas as liquids through the process of absorption, condensation, adsorption, or other methods in gas processing or cycling plants. Generally such liquids consist of propane and heavier hydrocarbons and are commonly referred to as lease condensate, natural gasoline, and liquefied petroleum gases. Natural gas liquids include natural gas plant liquids (primarily ethane, propane, butane, and isobutene).

Naturally occurring radioactive materials (NORM): Radioactive materials that are found in nature.

Neutron: An uncharged elementary particle, with a mass slightly greater than that of the proton, found in the nucleus of every atom heavier than hydrogen.

NGCC: See Natural Gas Combined Cycle.

Nitrogen oxides (NO_x): Nitrogen oxides include various nitrogen compounds, primarily nitrogen dioxide and nitric oxide. They form when fossil fuels are burned at high temperatures and react with volatile organic compounds to form ozone, the main component of urban smog. They are also a precursor pollutant that contributes to the formation of acid rain. Nitrogen oxides are among the six criteria air pollutants specified under Title I of the Clean Air Act.

No-Action Alternative: For this GEIS, the no-action alternative represents a decision by the Nuclear Regulatory Commission to not allow for continued operation of nuclear power plants beyond the current operating license terms. All plants eventually would be required to shut down and undergo decommissioning. Under the no-action alternative, these eventualities would occur sooner rather than later.

Noble gases: A gaseous chemical element that does not readily enter into chemical combination with other elements. Examples are helium, argon, krypton, xenon, and radon.

Noise: Unwanted sound; a subjective term reflective of societal values regarding what constitutes unwanted or undesirable intrusions of sound.

Nonattainment: Any area that does not meet the national primary or secondary ambient air quality standard established by the Environmental Protection Agency for designated pollutants, such as carbon monoxide and ozone.

Nonradioactive nonhazardous waste: Waste that is neither radioactive nor hazardous.

Nonrenewable fuels: Fuels that cannot be easily made or “renewed,” such as oil, natural gas, and coal.

Nonrenewable waste fuels: Municipal solid wastes from nonbiogenic sources and tire-derived fuels.

Nonstochastic effect: Health effects, the severity of which varies with the dose and for which a threshold is believed to exist. Radiation-induced cataract formation is an example of a nonstochastic effect (also called a deterministic effect).

North American Electric Reliability Council (NERC): A council formed in 1968 by the electric utility industry to promote the reliability and adequacy of bulk power supply in the electric utility systems of North America. NERC consists of regional reliability councils and encompasses essentially all the power regions of the contiguous United States, Canada, and Mexico.

North American Industry Classification System (NAICS): A coding system developed jointly by the United States, Canada, and Mexico to classify businesses and industries according to the type of economic activity in which they are engaged. NAICS replaces the Standard Industrial Classification (SIC) codes.

Nuclear fuel: Fuel that produces energy in a nuclear reactor through the process of nuclear fission.

Nuclear fuel cycle: The series of steps involved in supplying fuel for nuclear power reactors, including mining, milling, isotopic enrichment, fabrication of fuel elements, use in reactors, chemical reprocessing to recover the fissionable material remaining in the spent fuel, re-enrichment of the fuel material re-fabrication into new fuel elements, and waste disposal.

Nuclear power: (nuclear electric power): Electricity generated by the use of the thermal energy released from the fission of nuclear fuel in a reactor.

Nuclear power plant: A facility that uses a nuclear reactor to generate electricity.

Nuclear reactor: A device in which nuclear fission may be sustained and controlled in a self-supporting nuclear reaction. There are many types of reactors, but all incorporate certain features, including fissionable material or fuel, a moderating material (unless the reactor is operated on fast neutrons), a reflector to conserve escaping neutrons, provisions of removal of heat, measuring and controlling instruments, and protective devices. The reactor is the heart of a nuclear power plant.

Nuclear Regulatory Commission (NRC): An independent regulatory agency that is responsible for overseeing the civilian use of nuclear materials in the United States. The NRC was established on October 11, 1974, by President Gerald Ford as one of two successor organizations to the Atomic Energy Commission (AEC), which became defunct on that same day. The NRC took over the AEC's responsibility for seeing that civilian nuclear materials and facilities are used safely and affect neither the public health nor the quality of the environment. The Commission's activities focus on the nuclear reactors in the United States that are used to generate electricity on a commercial basis. It licenses the construction of new nuclear reactors and regulates their operation on a continuing basis. It oversees the use, processing, handling, and disposal of nuclear materials and wastes, inspects nuclear power plants and monitors both their safety procedures and their security measures, enforces compliance with established safety standards, and investigates nuclear accidents. The NRC's Commissioners are appointed by the President of the United States.

Occupational dose: The dose received by an individual in the course of employment in which the individual's assigned duties involve exposure to radiation or to radioactive material. Occupational dose does not include dose received from background radiation, from any medical administration the individual has received, from exposure to individuals administered radioactive materials and released in accordance with 10 CFR 35.75, from voluntary participation in medical research programs, or as a member of the general public.

Occupational exposure: An exposure that occurs during work with sources of ionizing radiation. For example, exposures received from working on a nuclear reactor, in nuclear reprocessing, or by a dental nurse taking x-rays would be classed as occupational.

Occupational Safety and Health Administration (OSHA): Independent Federal agency whose mission is to prevent work-related injuries, illnesses, and deaths. Congress created OSHA under the Occupational Safety and Health Act on December 29, 1970.

Once-through cooling system: In this cooling system, circulating water for condenser cooling is obtained from an adjacent body of water, such as a lake or river, passed through the condenser tubes, and returned directly at a higher temperature to the adjacent body of water.

Organ dose: Dose received as a result of radiation energy absorbed in a specific organ.

Organism: An individual of any form of animal or plant life.

Outer Continental Shelf (OCS): The OCS consists of the submerged lands, subsoil, and seabed, lying between the seaward extent of the States' jurisdiction and the seaward extent of Federal jurisdiction.

Overburden: Any material, consolidated or unconsolidated, that overlies a coal or other mineral deposit.

Ozone (O_3): A strong-smelling, reactive toxic chemical gas consisting of three oxygen atoms chemically attached to each other. It is formed in the atmosphere by chemical reactions involving nitrogen oxide and volatile organic compounds. The reactions are energized by sunlight. Ozone is a criteria air pollutant under the Clean Air Act and is a major constituent of smog.

Parabolic trough: A high-temperature (above 180°F) solar thermal concentrator with the capacity for tracking the sun using one axis of rotation. Also known as a power trough.

Particulate matter: Fine solid or liquid particles, such as dust, smoke, mist, fumes, or smog, found in air or emissions. The size of the particulates is measured in micrometers (µm). One micrometer is 1 millionth of a meter or 0.000039 inch. The U.S. Environmental Protection Agency has set standards for $PM_{2.5}$ and PM_{10} particulates.

Pathway (exposure): The way in which people are exposed to radiation or other contaminants. The three basic pathways are inhalation (contaminants are taken into the lungs), ingestion (contaminants are swallowed), and direct (external) exposure (contaminants cause damage from outside the body).

Peak load: The maximum load during a specified period of time.

Perfluorocarbons (PFCs): A group of man-made chemicals composed of one or two carbon atoms and four to six fluorine atoms, containing no chlorine. PFCs have no commercial uses and are emitted as a by-product of aluminum smelting and semiconductor manufacturing. PFCs have very high 100-year Global Warming Potentials and are very long-lived in the atmosphere.

Personal protective equipment (PPE): Clothing and equipment that are worn to reduce exposure to potentially hazardous chemicals and other pollutants.

Person-rem: The sum of the individual radiation dose equivalents received by members of a certain group or population. It may be calculated by multiplying the average dose per person by the number of persons exposed. For example, a thousand people, each exposed to one millirem, would have a collective dose of one person-rem.

Petroleum: A broadly defined class of liquid hydrocarbon mixtures. Includes crude oil, lease condensate, unfinished oils, refined products obtained from the processing of crude oil, and natural gas plant liquids. Volumes of finished petroleum products include nonhydrocarbon compounds, such as additives and detergents, after they have been blended into products.

Photosynthesis: The process in green plants and certain other organisms by which carbohydrates are synthesized from carbon dioxide and water using sunlight as an energy source. Most forms of photosynthesis release oxygen as a by-product. Chlorophyll typically acts as the catalyst in this process.

Photovoltaic and solar thermal energy: Energy radiated by the sun as electromagnetic waves (electromagnetic radiation) that is converted at electric utilities into electricity by means of solar (photovoltaic) cells or concentrating (focusing) collectors.

Photovoltaic cell (PVC): An electronic device consisting of layers of semiconductor materials fabricated to form a junction (adjacent layers of materials with different electronic characteristics) and electrical contacts and being capable of converting incident light directly into electricity (direct current).

Photovoltaic system: A system that converts light into electric current.

Phytoplankton: Small, often single-celled plants that live suspended in bodies of water.

Plutonium: A heavy, man-made, radioactive metallic element. The most important isotope is Pu-239, which has a half-life of more than 20,000 years; it can be used in reactor fuel and is the primary isotope in weapons.

PM_{10}: Particulate matter with a mean aerodynamic diameter of 10 micrometers (0.0004 in.) or less. Particles less than this diameter are small enough to be deposited in the lungs.

$PM_{2.5}$: Particulate matter with a mean aerodynamic diameter of 2.5 micrometers (0.0001 in.) or less.

Polycyclic aromatic hydrocarbons (PAHs): Aromatic hydrocarbons containing more than one fused benzene ring. PAHs are commonly formed during the incomplete burning of coal, oil and gas, garbage, or other organic substances.

Population dose: Dose received collectively by a population.

Power: The rate of producing, transferring, or using energy, most commonly associated with electricity. Power is measured in watts and often expressed in kilowatts (kW) or megawatts (mW).

Pressurized water reactor (PWR): A power reactor in which thermal energy is transferred from the core to a heat exchanger by high-temperature water kept under high pressure in the primary system. Steam is generated in the heat exchanger in a secondary circuit.

Prevention of Significant Deterioration (PSD): A Federal permit program for facilities defined as major sources under the New Source Review program. The intent of the program is to prevent the air quality in an attainment area from deteriorating.

Primary system: A term that refers to the circulating water system in a pressurized water reactor, which removes the energy from the reactor and delivers it to the heat exchanger.

Proposed Action: An action proposed by a Federal agency and evaluated in an environmental impact statement or environmental assessment. In this GEIS, the proposed action is to renew commercial nuclear power plant operating licenses.

Proton: A small particle, typically found within an atom's nucleus, that possesses a positive electrical charge. The number of protons is unique for each chemical element.

Proximity: Used sparingly to evaluate the remoteness of areas in which nuclear plants are located. A measure of the distance to larger cities.

Public dose: The dose received by members of the public from exposure to radiation or to radioactive material released by a licensee, or to any other source of radiation under the control of a licensee. Public dose does not include occupational dose or doses received from background radiation, from any medical administration the individual has received, from exposure to individuals administered radioactive materials and released in accordance with 10 CFR 35.75, or from voluntary participation in medical research programs.

Pulverized coal: Coal that has been crushed to a fine dust in a grinding mill. It is blown into the combustion zone of a furnace and burns very rapidly and efficiently.

Pumped-storage hydroelectric plant: A hydropower plant that usually generates electric energy during peak load periods by using water previously pumped into an elevated storage reservoir during offpeak periods when excess generating capacity is available to do so. When additional generating capacity is needed, the water can be released from the reservoir through a conduit to turbine generators located in a power plant at a lower level.

Putrescible: Subject to the biological decomposition of organic matter and associated with anaerobic (no oxygen present) conditions.

Pyrolysis: The thermal decomposition of biomass at high temperatures (greater than 400°F, or 200°C) in the absence of air. The end product of pyrolysis is a mixture of solids (char), liquids (oxygenated oils), and gases (methane, carbon monoxide, and carbon dioxide) with proportions determined by operating temperature, pressure, oxygen content, and other conditions.

Quality factor: The modifying factor that is used to derive dose equivalent from absorbed dose.

Rad: The special unit for radiation absorbed dose, which is the amount of energy from any type of ionizing radiation (e.g., alpha, beta, gamma, neutrons) deposited in any medium (e.g., water, tissue, air). A dose of one rad means the absorption of 100 ergs (a small but measurable amount of energy) per gram of absorbing tissue (100 rad=1 gray).

Radiation (ionizing radiation): Alpha particles, beta particles, gamma rays, x-rays, neutrons, high-speed electrons, high-speed protons, and other particles capable of producing ions. Radiation, as used in 10 CFR Part 20, does not include nonionizing radiation, such as radiowaves or microwaves, or visible, infrared, or ultraviolet light (see also 10 CFR 20.1003).

Radioactive decay: The decrease in the amount of any radioactive material with the passage of time due to the spontaneous emission from the atomic nuclei of either alpha or beta particles, often accompanied by gamma radiation.

Radioactive waste: Radioactive materials at the end of a useful life cycle or in a product that is no longer useful and should be properly disposed of.

Radioactivity: The spontaneous emission of radiation, generally alpha or beta particles, often accompanied by gamma rays, from the nucleus of an unstable isotope. Also, the rate at which radioactive material emits radiation. Measured in units of becquerels or disintegrations per second.

Radioisotope: An unstable isotope of an element that decays or disintegrates spontaneously, emitting radiation. Approximately 5000 natural and artificial radioisotopes have been identified.

Radionuclide: A radioisotope of an element.

Raptor: A bird of prey such as a falcon, hawk, or eagle.

Rated power: The design power level of an electrical generating device, which is the maximum power the device is allowed to generate.

Reactor vessel: A device in which nuclear fission may be sustained and controlled in a self-supporting nuclear reaction. It houses the core (made up of fuel rods, control rods, and instruments contained within a reactor vessel) of most types of power reactors.

Receptor: The individual or resource being affected by the impact.

Reference reactor year (RRY): Refers to one year of operation of a 1000-MW electric capacity nuclear power plant.

Refurbishment: Repair or replacement of reactor systems, structures, and components, such as turbines, steam generators, pressurizers, and recirculation piping systems.

Region of Influence: Area occupied by affected resources and the distances at which impacts associated with license renewal may occur.

rem (roentgen equivalent man): The acronym for roentgen equivalent man is a standard unit that measures the effects of ionizing radiation on humans. The dose equivalent in rem is equal to the absorbed dose in rads multiplied by the quality factor of the type of radiation (see 10 CFR 20.1004).

Renewable energy resources: Energy resources that are naturally replenishing but flow-limited. They are virtually inexhaustible in duration, but limited in the amount of energy that is available per unit of time. Renewable energy resources include biomass, hydro, geothermal, solar, wind, ocean thermal, wave action, and tidal action.

Renewable portfolio standards (RPSs): State policies that require electricity providers to generate a certain percentage, or, in some cases a certain specified amount, of electrical power through the use of renewable energy sources by a certain date.

Residual fuel oil: A general classification for the heavier oils, known as No. 5 and No. 6 fuel oils, that remain after the distillate fuel oils and lighter hydrocarbons are distilled away in refinery operations.

Resource Conservation and Recovery Act (RCRA): Act that regulates the storage, treatment, and disposal of hazardous and nonhazardous wastes.

Right-of-way: The land and legal right to use and service the land along which a transmission line is located. Transmission line right-of-ways are usually acquired in widths that vary with the kilovolt (kV) size of the line.

Riparian: Relating to, living in, or located on the bank of a river, lake, or tidewater.

Risk: The combined answers to the questions (1) What can go wrong?, (2) How likely is it?, and (3) What are the consequences?

Risk coefficient: A coefficient used to convert dose to risk.

roentgen equivalent man (rem): See rem.

Run-of-river hydroelectric plant: A hydropower plant that uses the flow of a stream as it occurs and has little or no reservoir capacity for storage.

SAFSTOR: A method of decommissioning in which the nuclear facility is placed and maintained in such condition that the nuclear facility can be safely stored and subsequently decontaminated to levels that permit release for restricted or unrestricted use.

Savanna: Grassland with scattered individual trees.

Scouring: The rapid erosion of sediment caused by the movement of water.

Scrubbers: Air pollution control devices that are used to remove particulates and/or gases from industrial or power exhaust streams.

Sediment: Particles of geologic origin that sink to the bottom of a body of water, or materials that are deposited by wind, water, or glaciers.

Seismic: Of, subject to, or caused by an earthquake or earth vibration.

Service water: Water used to cool heat exchangers or coolers in the power house other than the condenser. Service water may or may not be treated for use.

Shallow-dose equivalent: Applies to external exposure of the skin or an extremity, is taken as the dose equivalent at a tissue depth of 0.007 centimeters averaged over an area of 1 square centimeter.

Sievert (Sv): The international system (SI) unit for dose equivalent equal to 1 Joule/kilogram. 1 sievert = 100 rem. Named for physicist Rolf Sievert.

Sludge: A dense, slushy, liquid-to-semifluid product that accumulates as an end result of an industrial or technological process. Industrial sludges are produced from the processing of energy-related raw materials, chemical products, water, mined ores, sewage, and other natural and man-made products.

Socioeconomics: Social and economic characteristics of a human population. Includes both the social impacts of economic activity and the economic impacts of social activity.

Solar energy: The radiant energy of the sun, which can be converted into other forms of energy, such as heat or electricity.

Solar power tower: A solar energy conversion system that uses a large field of independently adjustable mirrors (heliostats) to focus solar rays on a near single point atop a fixed tower (receiver). The concentrated energy may be used to directly heat the working fluid of a Rankin cycle engine or to heat an intermediary thermal storage medium (such as a molten salt).

Solar radiation: A general term for the visible and near-visible (ultraviolet and near-infrared) electromagnetic radiation that is emitted by the sun. It has a spectral, or wavelength, distribution that corresponds to different energy levels; short wavelength radiation has a higher energy than long-wavelength radiation.

Solar thermal systems or concentrating solar power (CSP): See solar power tower.

Sound intensity: The measure of the amount of energy that is transported over a given area per unit of time. Sound intensity is expressed in units of W/m^2.

Sparseness: Used (with proximity) to evaluate the remoteness of areas in which nuclear plants are located. A measure of population density.

Spawning: Release or deposition of spermatozoa or ova, of which some will fertilize or be fertilized to produce offspring.

Spent fuel burnup: A measure of how much energy is extracted from the nuclear fuel before it is removed from the core. Its units are MW-day per metric tonne of uranium in fresh fuel.

Spent nuclear fuel: Nuclear reactor fuel that has been removed from a nuclear reactor because it can no longer sustain power production for economic or other reasons.

Spent-fuel pool: An underwater storage and cooling facility for spent fuel elements that have been removed from a reactor.

State Historic Preservation Officer (SHPO): The State officer charged with the identification and protection of prehistoric and historic resources in accordance with the National Historic Preservation Act.

State Implementation Plan (SIP): State-specific air quality plan for controlling air pollution emissions at levels that would attain and maintain compliance with the National Ambient Air Quality Standards or State-specific air quality standards. Each State must develop its own regulations to monitor, permit, and control air emissions within its boundaries.

Steam turbine: A device that converts high-pressure steam, produced in a boiler, into mechanical energy that can then be used to produce electricity by forcing blades in a cylinder to rotate and turn a generator shaft.

Stilling basin: An open structure or excavation at the foot of an overfall, chute, drop, or spillway to reduce the energy of the descending stream. A basin constructed to dissipate the energy of fast-flowing water (e.g., from a spillway or bottom outlet) and to protect the stream bed below a dam from erosion.

Stochastic effect: Health effects that occur randomly and for which the probability of the effect occurring, rather than its severity, is assumed to be a linear function of dose without threshold. Hereditary effects and cancer incidence are examples of stochastic effect.

Store and release dam: Hydropower facilities that store water in a reservoir behind a dam and release the water through turbines as needed to generate electricity.

Stratification: The formation, accumulation, or deposition of materials in layers, such as layers of freshwater overlying higher salinity water (saltwater) in estuaries.

Strip mine: An open cut in which the overburden is removed from a coal bed or other mineral deposit prior to the removal of the desired underlying material.

Sub-bituminous coal: Sub-bituminous coal has a higher heating value than lignite coal, due primarily to its average carbon content of 35–45 percent carbon and lower moisture levels. Sub-bituminous coal deposits in the United States are estimated to be at least 100 million years old. Sub-bituminous coal represents about 42 percent of annual U.S. coal production, with the majority being burned in boilers to produce steam to drive turbines that produce electricity. The major sub-bituminous deposits are in the Western states, primarily Wyoming.

Sulfur: A yellowish nonmetallic element. It is present at various concentrations in many fossil fuels whose combustion releases sulfur compounds that are considered harmful to the environment. Some of the most commonly used fossil fuels are categorized according to their sulfur content, with lower sulfur fuels usually selling at a higher price.

Sulfur dioxide (SO_2): A gas formed from burning fossil fuels. Sulfur dioxide is one of the six criteria air pollutants specified under Title I of the Clean Air Act.

Sulfur oxides (SO_x): Pungent, colorless gases that are formed primarily by fossil fuel combustion. Sulfur oxides may damage the respiratory tract, as well as plants and trees.

Supercritical and subcritical: Supercritical and subcritical define the thermodynamic state of the water in the steam cycle. In supercritical steam generating units, the pressure at which the steam cycle is maintained is above water's critical point so there is no distinction between water's liquid and gaseous phases and the steam behaves as a homogenous supercritical fluid. The supercritical point for water is 22.1 MPa (approximately 3207 pounds per square inch [psi]). Supercritical steam generators offer numerous advantages over their subcritical counterparts, including higher thermal efficiencies, greater flexibility in changing loads, and greater combustion efficiencies, resulting in lesser amounts of pollutants per units of power generated. No ultra-supercritical units are operating in the United States.

Supplemental Environmental Impact Statement (SEIS): A SEIS updates or supplements an existing EIS (such as the GEIS). The (Nuclear Regulatory) Commission directs the staff to issue site-specific supplements to the GEIS for each license renewal application.

Surface mine (surface mining): A coal-producing mine that is usually within a few hundred feet of the surface. Earth above or around the coal (overburden) is removed to expose the coalbed, which is then mined with surface excavation equipment, such as draglines, power shovels, bulldozers, loaders, and augers. It may also be known as an area, contour, open-pit, strip, or auger mine.

Surface water: Water on the earth's surface that is directly exposed to the atmosphere, as distinguished from water in the ground (groundwater).

Switchyard: A facility used at power plants to increase the electric voltage and feed into the regional power distribution system. Electricity generated at the plant is carried off the site by transmission lines.

Syngas: A gas mixture that contains varying amounts of carbon monoxide and hydrogen generated by the gasification of a carbon-containing fuel.

Tallgrass: Any of various grasses that are tall and that flourish with abundant moisture, typically associated with the prairies of the Midwestern United States.

Terrestrial: Belonging to or living on land.

Thermal: Having to do with heat. Also, a term used to identify a type of electric generating station, capacity, capability, or output in which the source of energy for the prime mover is heat.

Thermal efficiency: A measure of the efficiency of converting the thermal energy generated by the burning of the fossils fuels or the fission of nuclear fuel to electrical energy.

Thermal effluents: Heated discharge from a cooling water system.

Thermal plume: The hot water discharged from a power-generating facility or other industrial plant. When the water at elevated temperature enters a receiving stream or body of water, it is not immediately dispersed and mixed with the cooler waters. The warmer water moves as a single mass (plume) from the discharge point until it cools and gradually mixes with that of the receiving water.

Thermal stratification: The formation of layers of different temperatures in a lake or reservoir.

Thermophilic: Organisms such as bacteria that require a relatively high-temperature environment for normal development.

Threatened species: Any species that is likely to become an endangered species within the foreseeable future throughout all or a significant portion of its range. Requirements for declaring a species threatened are contained in the Endangered Species Act.

Total body dose: Sum of the dose received from external exposure to the total body, gonads, active blood-forming organs, head and trunk, or lens of the eye and the dose due to the intake of radionuclides by inhalation and ingestion where a radioisotope is uniformly distributed throughout the body tissues rather than being concentrated in certain parts.

Total effective dose equivalent (TEDE): The sum of the deep-dose equivalent (for external exposure) and the committed effective dose equivalent (for internal exposure).

Transformer: An electrical device for changing the voltage of alternating current.

Transmission: The movement or transfer of electric energy over an interconnected group of lines and associated equipment between points of supply and points at which it is transformed for delivery to consumers or is delivered to other electric systems. Transmission is considered to end when the energy is transformed for distribution to the consumer.

Transmission line: A set of conductors, insulators, supporting structures, and associated equipment used to move large quantities of power at high voltage, usually over long distances between a generating or receiving point and major substations or delivery points.

Transuranic waste: Material contaminated with transuranic elements that is produced primarily from reprocessing spent fuel and from use of plutonium in fabrication of nuclear weapons.

Tritium: A radioactive isotope of hydrogen with one proton and two neutrons. Because it is chemically identical to natural hydrogen, tritium can easily be taken into the body by any ingestion path. It decays by beta emission. It has a radioactive half-life of about 12.5 years.

Turbine: A device in which a stream of water or gas turns a bladed wheel, converting the kinetic energy of the flow into mechanical energy available from the turbine shaft. Turbines are considered the most economical means of turning large electrical generators. They are typically driven by steam, fuel vapor, water, or wind.

U.S. Environmental Protection Agency (EPA): The independent Federal agency, established in 1970, that regulates Federal environmental matters and oversees the implementation of Federal environmental laws.

Uranium: A radioactive element with the atomic number 92 and, as found in natural ores, an atomic weight of approximately 238. The two principal natural isotopes are uranium-235 (0.7 percent of natural uranium) and uranium-238 (99.3 percent of natural uranium). Natural uranium also includes a minute amount of uranium-234.

Universal waste: A special class of hazardous waste consisting of commonly used and yet hazardous materials: batteries, pesticides, mercury-containing equipment, and lamps.

Vertebrate: Any species having a backbone or spinal column including fish, amphibians, reptiles, birds, and mammals.

Visual impact: The creation of an intrusion or perceptible contrast that affects the scenic quality of a landscape.

Visual resources: Refers to all objects (man-made and natural, moving and stationary) and features such as landforms and water bodies that are visible on a landscape.

Volatile organic compounds (VOCs): A broad range of organic compounds that readily evaporate at normal temperatures and pressures. Sources include certain solvents, degreasers (e.g., benzene), and fuels. Volatile organic compounds react with other substances (primarily nitrogen oxides) to form ozone. They contribute significantly to photochemical smog production and certain health problems.

Waste coal: Usable material that is a by-product of previous coal processing operations. Waste coal may be relatively clean material composed primarily of coal fines, material in which extraneous noncombustible constituents have been partially removed, or mixed coal, soil, and rock (mine waste) burned as is in unconventional boilers, such as fluidized bed units. Examples include fine coal, coal obtained from a refuse bank or slurry dam, anthracite culm, bituminous gob, and lignite waste.

Wastewater: The used water and solids that flow to a treatment plant. Stormwater, surface water, and groundwater infiltration also may be included in the wastewater that enters a wastewater treatment plant.

Water quality: The condition of water with respect to the amount of impurities in it.

Weir: A dam in a waterway over which water flows and that serves to raise the water level or to direct or regulate flow.

Whole-body dose: Sum of the dose received from external exposure to the total body, gonads, active blood-forming organs, head and trunk, or lens of the eye and the dose due to the intake of radionuclides by inhalation and ingestion where a radioisotope is uniformly distributed throughout the body tissues rather than being concentrated in certain parts.

Wind energy: Kinetic energy present in wind motion that can be converted to mechanical energy for driving pumps, mills, and electric power generators.

Wind farm: One or more wind turbines operating within a contiguous area for the purpose of generating electricity. See also wind power plant.

Wind power plant: Wind turbines interconnected to a common utility system through a system of transformers, distribution lines, and (usually) one substation. Operation, control, and maintenance functions are often centralized through a network of computerized monitoring systems, supplemented by visual inspection.

Wind turbine: Wind energy conversion device that produces electricity; typically three blades rotating about a horizontal axis and positioned upwind of the supporting tower.

X-rays and gamma rays: Waves of pure energy that travel with the speed of light that are very penetrating and require thick concrete or lead shielding to stop them.

Yucca Mountain Repository: The site of the U.S. Department of Energy's proposed repository for spent nuclear fuel and high-level radioactive waste. The U.S. Environmental Protection Agency established the public health and environmental radiation protection standards for the facility.

Zooplankton: Small animals that float passively in the water column. Includes eggs and larvae of many fish and invertebrate species.

NRC FORM 335
(9-2004)
NRCMD 3.7

U.S. NUCLEAR REGULATORY COMMISSION

BIBLIOGRAPHIC DATA SHEET

(See instructions on the reverse)

1. REPORT NUMBER
(Assigned by NRC, Add Vol., Supp., Rev., and Addendum Numbers, if any.)

NUREG-1437, Volume 1, Revision 1

2. TITLE AND SUBTITLE

Generic Environmental Impact Statement for License Renewal of Nuclear Plants
Main Report
Draft Report for Comment

3. DATE REPORT PUBLISHED

MONTH	YEAR
July	2009

4. FIN OR GRANT NUMBER

5. AUTHOR(S)

6. TYPE OF REPORT

Technical

7. PERIOD COVERED *(Inclusive Dates)*

8. PERFORMING ORGANIZATION - NAME AND ADDRESS *(If NRC, provide Division, Office or Region, U.S. Nuclear Regulatory Commission, and mailing address; if contractor, provide name and mailing address.)*

Division of License Renewal
Office of Nuclear Reactor Regulation
U.S. Nuclear Regulatory Commission
Washington, DC 20555-0001

9. SPONSORING ORGANIZATION - NAME AND ADDRESS *(If NRC, type "Same as above"; if contractor, provide NRC Division, Office or Region, U.S. Nuclear Regulatory Commission, and mailing address.)*

Same as 8 above

10. SUPPLEMENTARY NOTES

11. ABSTRACT *(200 words or less)*

U.S. Nuclear Regulatory Commission (NRC) regulations allow for the renewal of commercial nuclear power plant operating licenses, depending on the outcome of an assessment to determine whether the nuclear plant can continue to operate safely and protect the environment during the 20-year period of extended operation. Renewal of a nuclear power plant operating license requires the preparation of an environmental impact statement (EIS). To support the preparation of these EISs, the NRC published the Generic Environmental Impact Statement for License Renewal of Nuclear Plants (GEIS) in 1996.

The NRC committed to review and revise the GEIS on a 10-year cycle, if necessary. This GEIS revision reviews and reevaluates the issues and findings of the 1996 GEIS. Lessons learned and knowledge gained during previous license renewal reviews provides a significant source of new information for this assessment. In addition, new research, findings, and other information were considered in evaluating the significance of impacts associated with license renewal. The intent of the GEIS is to determine which issues would result in the same impact at all nuclear power plants, and which issues require a plant-specific analysis for impact determinations. The GEIS is intended to improve the efficiency of the license renewal process by (1) providing an evaluation of the types of environmental impacts that may occur as a result of renewing the license of a nuclear power plant, (2) identifying and assessing the impacts that are expected to be generic (the same or similar), and (3) defining the number and scope of impacts that need to be addressed in plant-specific EISs. The GEIS revision identifies 78 environmental impact issues for consideration in plant-specific supplements to the GEIS.

12. KEY WORDS/DESCRIPTORS *(List words or phrases that will assist researchers in locating the report.)*

Generic Environmental Impact Statement for License Renewal of Nuclear Plants
GEIS
NUREG-1437, Revision 1
National Environmental Policy Act
NEPA
License Renewal

13. AVAILABILITY STATEMENT

unlimited

14. SECURITY CLASSIFICATION

(This Page)

unclassified

(This Report)

unclassified

15. NUMBER OF PAGES

16. PRICE

PRINTED ON RECYCLED PAPER

Printed
on recycled
paper

Federal Recycling Program

NUREG-1437
Vol. 1, Addendum 1

Generic Environmental Impact Statement for License Renewal of Nuclear Plants

Main Report
Section 6.3—Transportation
Table 9.1 Summary of findings on NEPA issues for license renewal of nuclear power plants

Final Report

U.S. Nuclear Regulatory Commission

Office of Nuclear Reactor Regulation

NUREG-1437
Vol. 1, Addendum 1

Generic Environmental Impact Statement for License Renewal of Nuclear Plants

Main Report
Section 6.3—Transportation
Table 9.1 Summary of findings on NEPA issues for license renewal of nuclear power plants

Final Report

Manuscript Completed: August 1999
Date Published: August 1999

Division of Regulatory Improvement Programs
Office of Nuclear Reactor Regulation
U.S. Nuclear Regulatory Commission
Washington, DC 20555-0001

ABSTRACT

This addendum to NUREG-1437, *Generic Environmental Impact Statement for License Renewal of Nuclear Plants,* documents the staff's analysis of the potential cumulative impacts of transporting spent nuclear fuel in the vicinity of a single high-level waste repository, and summarizes the staff's analyses undertaken to determine whether the environmental impacts of the transportation of higher enrichment and higher burnup spent nuclear fuel are consistent with the values of 10 CFR 51.52, Table S-4. The intent of the study is a generic analysis of the cumulative impacts associated with transportation of spent nuclear fuel as a result of nuclear power plant license renewal. The results of the analysis will be used to amend 10 CFR Part 51.53 and Appendix B to Subpart A of 10 CFR Part 51, and is not intended to support any other regulatory decision by the NRC. This addendum also includes an appendix that summarizes comments on the draft of the addendum, and documents the staff's responses to those comments.

CONTENTS

ABSTRACT iii
LIST OF FIGURES vii
LIST OF TABLES vii
ACRONYMS AND ABBREVIATION ix

1. INTRODUCTION 1
   1.1 PURPOSE OF THE ADDENDUM 1
   1.2 SCOPE OF THE ADDENDUM 1
   1.3 BACKGROUND 2

2. CUMULATIVE IMPACTS OF SPENT NUCLEAR FUEL TRANSPORTATION 4
   2.1 BACKGROUND ON THE PROPOSED HLW REPOSITORY 5
   2.2 APPROACH TO ANALYSIS 5
      2.2.1 Transportation and Route Scenarios 7
      2.2.2 Analysis of Routes Using the HIGHWAY Model 11
      2.2.3 The RADTRAN Model 11
   2.3 CUMULATIVE HEALTH RISKS OF SPENT FUEL TRANSPORTATION IN CLARK COUNTY, NEVADA 15
      2.3.1 Radiological Risks 15
      2.3.2 Nonradiological Risks 19
   2.4 CUMULATIVE IMPACTS OF ADDITIONAL RADIOACTIVE WASTE SHIPMENTS 21
   2.5 SUMMARY OF SNF TRANSPORT IMPACTS 22
   2.6 ENVIRONMENTAL JUSTICE 24

3. IMPLICATIONS OF HIGHER BURNUP FUEL FOR THE CONCLUSIONS IN TABLE S-4 26
   3.1 BACKGROUND 26
   3.2 ANALYSES 27
   3.3 CONCLUSIONS 29

4. SUMMARY AND CONCLUSIONS 30

5. REFERENCES 32

6. LIST OF PREPARERS 34

APPENDIX 1: STAFF RESPONSES TO PUBLIC COMMENTS ON ADDENDUM 1 AND THE PROPOSED RULE A1
APPENDIX 2: LISTINGS OF HIGHWAY ROUTES EXAMINED IN THIS STUDY A2
APPENDIX 3: SELECTED PAGES FROM THE RADTRAN 4 COMPUTER CODE RUNS A3

LIST OF FIGURES

1. Proposed Las Vegas beltway 9
2. Routes analyzed in this study 10

LIST OF TABLES

1. Transportation route parameters for RADTRAN analysis 12
2. Radionuclide inventory for the SNF shipments 14
3. Estimated cumulative radiation exposure resulting from SNF transport in Clark County 17
4. Cumulative radiological transportation risks resulting from SNF transport in Clark County 18
5. Total non-radiological truck fatalities, injuries, and accidents resulting from SNF shipments 21
6. Estimated cumulative radiation exposure resulting from transport of SNF and DOE radioactive waste in Clark County 23
7. Cumulative radiological transportation risks resulting from transport of SNF and DOE radioactive wastes in Clark County 23
8. 1990 distribution (in percent) of racial and ethnic population groups in Clark County, Nevada 25
9. Ethnic and racial groups (in percent) living within 0.5 mile (0.8 km) of the transportation routes 25
10. Fraction of persons along the transportation routes who are in poverty (percent) 26

ACRONYMS AND ABBREVIATIONS

CFR	*Code of Federal Regulations*
cm	centimeter
DOE	U.S. Department of Energy
DOT	U.S. Department of Transportation
EIS	environmental impact statement
FR	*Federal Register*
ft	foot
GEIS	*Generic Environmental Impact Statement for License Renewal of Nuclear Plants (NUREG-1437)*
HLW	high-level waste
in	inch
km	kilometer
lb	pound
LRFC	lifetime risk of fatal cancer
m	meter
mrem	millirem
mSv	millisievert
MTHM	metric tons of heavy metal (a conventional unit for high-level nuclear waste)
MT	metric ton [i.e., 1000 kilograms (about 2200 pounds)]
MTU	metric tons uranium
MWd	megawatt-days
NRC	U.S. Nuclear Regulatory Commission
NWPA	Nuclear Waste Policy Act
SNF	spent nuclear fuel
Sv	sievert

1. INTRODUCTION

1.1 PURPOSE OF THE ADDENDUM

This Addendum to NUREG-1437, *Generic Environmental Impact Statement for License Renewal of Nuclear Plants*, May 1996, supplements the analyses reported in Section 6.3 "Transportation," and especially Section 6.3.2, "Table S-4–Environmental Impacts of Transportation of Fuel and Waste to and From One Light-Water-Cooled Nuclear Power Reactor" of that report. The analyses reported in this addendum specifically address whether the environmental impacts of the transportation of higher enrichment and higher burnup spent nuclear fuel are consistent with the values of 10 CFR 51.52, Table S-4 as applicable to license renewal, continue to be applicable given that it is likely that spent fuel will be shipped to a single destination, such as the proposed repository at Yucca Mountain in Nye County, Nevada, and given that spent fuel shipments will involve higher enrichment and higher burnup fuel than was assumed in calculating the impacts shown in Table S-4. The analyses reported in this Addendum provide the basis for amending the U.S. Nuclear Regulatory Commission's (NRC) regulations for addressing the environmental impacts associated with the transportation of fuel and waste to and from a commercial nuclear power plant within the context of the license renewal review process. The amendment is to the provisions in 10 CFR 51.53(c) and in Appendix B to Subpart A of 10 CFR Part 51 which specify how Table S-4 is to be used in individual license renewal reviews. The values in Table S-4 are found to be bounding when accounting for spent fuel shipments to a single destination and for the shipment of higher enriched and higher burnup fuel. The amendment affects only the provisions in §51.53(c) and Appendix B to Subpart A that govern the use of impact values codified in 10 CFR 51.52 as it applies to reviews to renew the operating license of individual nuclear power plants. It is not intended that this Addendum support any other regulatory decision by the NRC.

1.2 SCOPE OF THE ADDENDUM

In NUREG-1437, Section 6.3 ("Transportation"), the radiological and nonradiological environmental impacts resulting from transportation of low-level radioactive waste and mixed waste[1] to off-site disposal facilities and of spent fuel to a monitored retrievable storage facility or a permanent repository were assessed. The environmental impacts from the transportation of fuel and waste attributable to license renewal were found to be small when they are within the impact parameters identified in 10 CFR 51.52. The findings in NUREG-1437 were codified in an amendment to 10 CFR Part 51 published in the *Federal Register* on June 5, 1996 (61 FR 28467). Public comments were solicited on the use of Table S-4 and several other areas of the final rule. This comment process identified two questions that should be addressed generically rather than requiring each license renewal applicant to address them individually. The first question is whether the environmental impact values contained in Table S-4 are still appropriate for use in license renewal reviews if spent fuel is transported to a single destination such as the candidate repository at Yucca Mountain, Nevada, even though the values in Table S-4 were developed from data reflecting spent fuel

[1]Mixed waste is low-level radioactive waste that also contains chemically hazardous constituents.

shipments to several destinations. The second question is whether the environmental impact values contained in Table S-4 are still appropriate for use in license renewal reviews given that applicants will be shipping spent fuel that is more highly enriched and irradiated longer than is accounted for in the analysis to develop Table S-4. Paragraph 51.52(a) requires a plant-specific analysis of transportation impacts if the uranium-235 enrichment exceeds 4 percent or if the average level of irradiation exceeds 33,000 megawatt-days per metric ton of uranium (MWd/MTU). The analyses in this Addendum are limited to these two questions. Numerous public comments that question the scope of the analyses were submitted on the draft Addendum. These comments and the NRC responses found in Appendix 1 provide further understanding of the purpose and scope of this Addendum to NUREG-1437.

1.3 BACKGROUND

On June 5, 1996, the Commission published in the *Federal Register* (61 FR 28467) a final rule amending its environmental protection regulations in 10 CFR Part 51 to improve the efficiency of the process of environmental review for applicants seeking to renew a nuclear power plant operating license for up to an additional 20 years. The rulemaking was based on the analyses reported in NUREG-1437 and was initiated with the objectives of (1) improving the efficiency of the license renewal process by drawing on the considerable experience of operating nuclear power plants in generic assessments of many of the environmental impacts, (2) reporting the analyses and findings in NUREG-1437, (3) codifying the findings in the Commission's environmental protection regulations so that repetitive reviews of those impacts that are well understood could be avoided.

In the statement accompanying the final rule, the Commission solicited comments on the treatment of low-level waste storage and disposal impacts, the cumulative radiological effects from the uranium fuel cycle, and the effects from the disposal of high-level waste (HLW) and spent fuel. The final rule would not become effective until these comments had been considered. A number of commentors argued that the requirements for the review of transportation of high-level waste in the rule were unclear with respect to (1) the use and legal status of 10 CFR 51.52, "Environmental effects of transportation of fuel and waste—Table S-4," in plant-specific license renewal reviews; (2) the conditions that must be met before an applicant may adopt Table S-4; and (3) the extent to which the generic effects of transporting spent fuel to a high-level waste repository should be considered in a plant-specific license renewal review.

After considering the comments received on the rule, the Commission republished the rule in the *Federal Register* on December 18, 1996 (61 FR 66537). The rule at 10 CFR 51.53(3)(c)(ii)(M) continued to require that "The environmental effects of transportation of fuel and waste shall be reviewed in accordance with 10 CFR 51.52." However, because of the comments received, the Commission added to that paragraph the requirement that

> The review of impacts shall also discuss the generic and cumulative impacts associated with transportation operation in the vicinity of a high-level waste repository site. The candidate site at Yucca Mountain should be used for the purpose of impact analysis as long as that site is under consideration for licensing.

Also in response to the comments, the Commission stated that

> As part of its effort to develop regulatory guidance for this rule, the Commission will consider whether further changes to the rule are desirable to generically address: (1) the issue of cumulative transportation impacts and (2) the implications that the use of higher burn-up fuel have for the conclusions in Table S-4. After consideration of these issues, the Commission will determine whether the issue of transportation impacts should be changed to Category 1.[2]

Chapter 6 of NUREG-1437 addresses the environmental impacts associated with the management of radiological and nonradiological wastes resulting from license renewal. Section 6.3, "Transportation," addresses the environmental impacts resulting from the shipment of (1) low-level radioactive waste and mixed waste[3] to off-site disposal facilities, (2) fresh fuel to the plant, and (3) spent nuclear fuel (SNF) from the plant to a monitored retrievable storage facility or permanent repository. Section 6.3 also provides an assessment of the applicability to license renewal of 10 CFR 51.52. In Section 6.3.4, the NRC concluded that "The environmental impacts from the transport of fuel and waste attributable to license renewal are found to be small when they are within the range of impact parameters identified in Table S-4." This finding was codified in Table B-1, "Summary of findings on NEPA issues for license renewal of nuclear power plants," of Appendix B to Subpart A of 10 CFR Part 51 in order to extend the use of Table S-4 to license renewal reviews. There were, however, certain circumstances not accounted for in the original analyses supporting Table S-4 and not adequately treated in the 1996 amendment for license renewal.

Summary Table S-4 was published in 10 CFR Part 51 to be used by an applicant for a nuclear power plant construction permit in its environmental report and by the NRC in its environmental impact statements. Table S-4, which accounts for the environmental effects of transportation of fuel and waste to and from the nuclear power plant, was intended to be a generic statement of transportation impacts that can be adopted in the review of any plant, as long as certain conditions identified in Part 51 are met. The environmental impact values in Table S-4 were developed from information available from actual shipments from nuclear power plants to a number of different destinations. Because a single destination at Yucca Mountain is now under consideration, it is necessary to determine whether it is reasonable to continue using the environmental impact values in Table S-4 in license renewal reviews. This Addendum provides the assessment to make that determination.

The environmental implications of the use of more highly enriched and higher burnup fuel than is considered in 10 CFR 51.51 (Table S-3) and in 10 CFR 51.52 (Table S-4) are assessed in NUREG-1437, Section 6.2.3. However, the analysis and conclusions relative to Table S-4 are not brought forward to Section 6.3, "Transportation." This Addendum corrects that omission and expands the assessment of the impacts of transportation of higher

[2] In NUREG-1437 and in the rule, Category 1 issues are those environmental issues for which the analysis and findings have been determined to be applicable to all nuclear power plants or to plants with specific types of cooling systems or other common plant or site characteristics. Absent new information that significantly changes the finding, these generic findings may be adopted in plant license renewal reviews. Category 2 issues are those environmental issues for which the analysis did not result in a finding common to all plants or to plants with common characteristics. Plant-specific reviews are required for Category 2 issues.

[3] Because only the radiological aspects of transportation are of interest here, in the remainder of this report, mixed waste will not be distinguished from other low level-waste.

enriched and higher burnup fuel. Previously, if fuel enrichment was to exceed 4 percent and burnup was to exceed 33,000 MWd/MTU during the license renewal period, the applicant had to provide a full review of the environmental impacts of transportation of fuel and waste to and from the reactor. For a number of years, licensees have been moving to the use of higher enriched fuel and longer burnup of that fuel than was specified for Table S-4. This Addendum contains an assessment of transportation of fuel having a uranium-235 enrichment of up to 5 percent and irradiated up to 62,000 MWd/MTU. That assessment indicates that the values shown in Table S-4 continue to be a reasonable estimate of environmental impacts of transportation of fuel and waste for the purpose of license renewal reviews.

2. CUMULATIVE IMPACTS OF SPENT NUCLEAR FUEL TRANSPORTATION

The purpose of this analysis is to determine whether the Commission can reach a generic conclusion about the cumulative impacts of spent fuel transport in the vicinity of a repository due to the renewal of a nuclear power plant operating license. If the Commission can reach such a conclusion, the issue can be designated a Category 1 issue and the finding codified in 10 CFR Part 51. For an issue to be designated Category 1, the following criteria must be met:

> (1) The environmental impacts associated with the issue have been determined to apply either to all plants or, for some issues, to plants having a specific type of cooling system or other specified plant or site characteristic;
> (2) A single significance level (i.e., small, moderate, or large) has been assigned to the impacts (except for collective off site radiological impacts from the fuel cycle and from high level waste and spent fuel disposal[4]); and
> (3) Mitigation of adverse impacts associated with the issue has been considered in the analysis, and it has been determined that additional plant-specific mitigation measures are likely not to be sufficiently beneficial to warrant implementation.

Section 2.1 is a description of the status of the Yucca Mountain site as a potential geologic repository in order to provide a context for the analysis.[5] Section 2.2 describes the approach employed by the NRC staff to analyze the cumulative effects of SNF transport in the vicinity

[4]This exception only applies to the two entries in Table B-1 labeled “Offsite radiological impacts (collective effects)” and “Offsite radiological impacts (spent fuel and high level waste disposal).

[5] Any generic conclusions by the Commission concerning the cumulative impacts of transportation associated with nuclear power plant license renewal would in no way affect any U.S. Department of Energy (DOE) decision concerning the suitability of Yucca Mountain, any consideration that DOE may give to transportation impacts in making that decision, and is not intended to support any other regulatory decision by the NRC.

of the proposed repository due to the renewal of a nuclear power plant operating license. Section 2.3 presents the results of those analyses, Section 2.4 discusses impacts of additional radioactive waste shipments, and Section 2.5 presents a summary of SNF transport impacts. Finally, Section 2.6 examines the potential for environmental justice issues related to radioactive waste transport in Clark County, Nevada.

2.1 BACKGROUND ON THE PROPOSED HLW REPOSITORY

The Nuclear Waste Policy Act of 1982 (NWPA) gave the U.S. Department of Energy the responsibility for finding a site for disposal of commercial SNF and other high-level waste, and for building and operating an underground disposal facility called a geologic repository. In 1987, Congress amended the NWPA and directed DOE to study only Yucca Mountain, Nevada, to decide whether it is suitable for a repository for high-level nuclear waste. Under the NWPA, DOE has been studying Yucca Mountain for 15 years as a potential geologic repository for the disposition of the nation's spent nuclear fuel and high-level radioactive waste. However, a number of decisions remain to be made before Yucca Mountain could ever be considered for development of a repository; any one of these decisions can stop the approval process. The Secretary of Energy plans to make a decision in 2001 on whether to recommend the site to the President for development as a repository. If DOE finds the Yucca Mountain site suitable and recommends the site, then the President must decide whether to recommend the site to Congress. If the President recommends the site and if Nevada submits a notice of disapproval, then Congress must decide whether to allow the recommendation of the President to take effect. Only if the decisions remaining to be made ultimately support development of a repository at Yucca Mountain, then DOE would submit a license application to the NRC. If the repository is licensed, then SNF and HLW would be shipped to the site using only NRC-certified transportation packages.

2.2 APPROACH TO ANALYSIS

The staff's overall approach was to use NRC's current knowledge base and transportation experience, to develop assumptions that reasonably estimate and bound the risks associated with the increased number of spent fuel transports that might occur if license renewal of nuclear power plants were to occur. These assumptions are generic in nature, meaning they could be applied to any licensed nuclear power plant. The NRC staff made a number of 'conservative' assumptions, which means that the assumptions would lead to an overestimate of what the NRC staff believes to be the actual impacts. Examples of where the NRC staff believes conservative assumptions have been used appear later in this section. The goal is for the results to be used by a license renewal applicant as it would any other Category 1 issue.

In accordance with the NWPA, DOE is required to prepare an environmental impact statement (EIS) for Yucca Mountain. The EIS will consider the proposal to construct, operate, and eventually, close a repository at Yucca Mountain. See DOE Notice of Intent (60 FR 40164). DOE is expected to assess national and regional (i.e., within the State of Nevada) transportation options that cover the full range of operating conditions relevant to

potential impacts to human health and the environment.[6] In its response to public scoping comments, DOE indicated that its draft EIS transportation analysis would include both truck and rail transport, and use Department of Transportation routing regulations and representative routes and actual route characteristics. Thus, DOE's expected transportation analyses will be detailed; however, DOE does not plan to complete its final EIS until 2000. DOE recently issued its draft EIS for a 180-day public comment period beginning on August 13, 1999.

This analysis aims to address the cumulative impacts of SNF transportation to a HLW repository from a generic perspective.[7] Because Congress, at this time, has directed DOE to study only Yucca Mountain for the proposed repository, the NRC staff began with the assumption that all SNF would be transported through Clark County, Nevada (i.e., the Las Vegas area) en route to the repository. This assumption is conservative in several ways. First, current law would not allow more than 70,000 metric tons of heavy metal (MTHM), with an estimated ~63,000 MTHM of that total being from commercial SNF, to be disposed of at Yucca Mountain. Nevertheless, the NRC staff used estimates of quantities of SNF that would need to be disposed of that are considerably larger than the 63,000 MTHM for the purpose of evaluating the entire inventory of SNF produced by nuclear power plants. Second, there are other routes to Yucca Mountain rather than through Clark County, but none of the other routes would encounter as high a population as found in Clark County. The NRC staff also adopted this assumption because—whether Yucca Mountain or another site is selected for a repository— estimates of transportation impacts are maximized in the case where all SNF is transported through a major metropolitan area. The NRC staff believes it important to emphasize that, while conservative, the assumption may not be at all representative or realistic.

Transportation to Yucca Mountain or another repository site may make heavy use of rail transportation, for example, because rail transport is expected to be less costly than truck transport. The overall radiological impacts of rail as compared to highway shipments may be lower. In part, this is because of the higher capacity of rail cars which allow fewer shipments and because population densities along most rail routes are typically lower than along the interstate highways that trucks would use to transport SNF. Additionally, when non-radiological accident rates between truck and rail shipments are normalized for payload size and mileage, the accident rate for rail shipments is about 3 percent of the comparable accident rate for truck shipments (Dyer and Reich1993). Evaluation of cumulative impacts in the vicinity of Las Vegas carried out in this analysis, therefore, represents an upper bound because it assumes all SNF would move by legal-weight truck rather than by rail or by a combination of rail and truck to reach the repository.[8] Further, to ensure that the impacts

[6] DOE's Notice of Intent indicates that its analyses of impacts of regional transportation issues will include (a) technical feasibility, (b) socioeconomic impacts, (c) land use and access impacts, and (d) impacts of constructing and operating a rail spur, a heavy haul route, and/or a transfer facility. 60 FR 40168.

[7] After DOE's publication of the final EIS for Yucca Mountain, the Commission will consider whether the information contained therein would be considered new and significant in the context of decisions related to the renewal of nuclear power plant operating licenses such that some additional action may be required.

[8] The NRC staff did not consider conservative analyses that would be outside the reasonable range of assumptions, e.g., routing shipments on indirect routes through densely populated areas. While the NRC staff did make many conservative assumptions, consistent with U.S. Department of Transportation regulations for highway route controlled quantities of nuclear materials (49 CFR 397.101), the NRC staff assumed that the

estimated here are conservative, the NRC staff assumed that shipments would be by legal-weight trucks rather than heavy-haul trucks because fewer shipments would be required if heavy-haul trucks were used.

To examine the effects of license renewal, the NRC staff used two estimates of SNF that would be transported to the repository. The first was based on the assumption that no nuclear plants have their licenses renewed, and the second was based on the assumption that all existing nuclear plants would operate for the full duration of a 20-year license renewal period. This means that the amount of SNF shipped for the license renewal case was assumed to be 50 percent greater than the amount of SNF for the no-license renewal case. The assumption used for the license renewal estimate is conservative because some plant owners have already decided not to request renewal of plant operating licenses.

As noted above, the NWPA prohibits DOE from accepting more than 70,000 MTHM of HLW at the Yucca Mountain repository, only 63,000 MTHM of which would be SNF. Based on this limit, DOE estimates on the order of 37,600 truck shipments of SNF to Yucca Mountain, assuming all SNF travels by truck in legal-weight casks (K. Skipper, Yucca Mountain Site Office, personal communication to D. P. Cleary, NRC, July 11, 1997). For this analysis, the NRC staff assumed that all current and committed SNF, about 84,000 MTHM, would be disposed of at Yucca Mountain. [The Nuclear Waste Technical Review Board (1997) made a very similar estimate of current and committed SNF.] Using DOE's estimated number of shipments and the total amount of SNF leads to an estimate of the order of 50,000 truck shipments without license renewal. Assuming all plants renew their licenses and operate for an additional 20 years, the estimate is on the order of 75,000 truck shipments.[9]

The analysis used the RADTRAN computer code (Section 2.2.3) to estimate the radiation doses to the people of Clark County and to transportation workers. The route and population density numbers used by RADTRAN computer code were generated by the HIGHWAY computer code and modified by the NRC staff to account for population growth (Section 2.2.1). The human health implication of the radiological exposures were estimated by use of BEIR V radiation-dose-to-cancer-risk factors (Section 2.2.3). The risk of non-radiological accidents were estimated by using U.S. Department of Transportation statistics (Section 2.3.2).

2.2.1 Transportation and Route Scenarios

The HIGHWAY computer code (Johnson et. al. 1993) was used to select routes. The HIGHWAY computer code models the U.S. highway system. Its data base includes all interstates, most U.S. highways, and many State, county, or local roadways. It represents about 380,000 km [240,000 miles] of roadway. Several different routing options are available in the highway program, including probable commercial routes, routes on the interstate highway system, routes that bypass major urban areas, and preferred routes designated by the States. Additional detailed routing analysis can be performed by blocking individual or

trucks would be routed on interstate highways to the maximum possible extent.

[9] Although these estimates exceed the 70,000 MTHM limit for the first repository in the NWPA, they represent conservative assumptions (i.e., overestimates) that would define an upper bound of potential impacts for a repository at Yucca Mountain.

sets of highway segments or intersections contained in the data base, a feature the NRC staff utilized to analyze the downtown routes.

The selection of preferred routes assumes that each shipment consists of highway-route-controlled quantities of radioactive materials. Travel time is optimized based on maximum utilization of the interstate highway system, with preference given to bypasses around major cities, except where alternate routes have been designated by state officials. Selected information considered by the NRC staff in using the HIGHWAY computer code is given in Appendix 2. These inputs and outputs provide a detailed listing of each highway route as well as mileage and population density zones considered in the analysis.

A beltway is being constructed in Clark County (Clark County 1997) which is expected to consist of three connected segments including a southern, western, and northern route; these segments will create a freeway "ring" around the Las Vegas Valley to route vehicles around, rather than through, the congested urban core (Figure 1). The southern segment of the beltway is being built in sections, with each segment opening to traffic upon completion. The first phase of the project, from I-15 to McCarran Airport (Airport Connector), was opened in 1994. The second section, from Warm Springs Road to Windmill Lane, opened to traffic in Oct. 1995. In Feb. 1997, the third portion of the project— from Windmill Lane to Eastern Ave.—became fully operational. The fourth section of the southern beltway, Eastern Ave. to Pecos Road, was completed in 1997.

The proposed northern and western beltway is expected to be a 10-lane facility with adequate right-of-way to permit construction of a fixed guideway facility (e.g., a commuter rail line). This is called the "ultimate facility" and will require a right-of-way width of 107 to 137 m [350 to 450 ft], plus land for interchanges or access to other transportation facilities.

Because the beltway is expected to be complete before the repository begins operation and because regulations require that spent fuel shipments use bypasses where possible, analysis of transportation on the route through downtown on the current interstate system yields higher exposure estimates than might actually occur. In addition, there are two plausible routes into Clark County; from the south on I-15, and from the northeast on I-15. SNF from western and southwestern states would likely arrive via the southern route. SNF from eastern states would likely arrive via the northeastern route. To ensure that the conclusions of this analysis are conservative, the NRC staff analyzed scenarios in which all SNF arrived via the northeastern route and scenarios in which all SNF arrived via the southern route. The combination of the northeastern and southern scenarios, and the downtown and beltway scenarios gives four transportation route scenarios that were analyzed by the NRC staff.

The NRC staff analyzed the potential impacts of SNF transport along the four routes (illustrated in Figure 2). The route named "from the northeast through downtown" starts at the Arizona-Nevada state line and follows I-15 to near downtown Las Vegas and then proceeds northwest on U.S. 95 beyond the northwestern corner of Clark County, Nevada. The route named "from the south through downtown" starts at the California-Nevada state line and proceeds north on I-15 to near downtown Las Vegas and then proceeds northwest on U.S. 95 through the northwestern portion of Clark County. The other routes are similar to the first two except each route will use the I-215 beltway that is currently planned and under construction around the north, west, and southern portions of the Las Vegas metropolitan area. The route named "from the northeast using the beltway" follows I-15 from the

Figure 1. Proposed Las Vegas beltway. *Source:* Clark County Department of Public Works informational drawing, http://www.co.clark.nv.us/PUBWORKS/gif/beltmap.jpg (accessed Oct. 14, 1997).

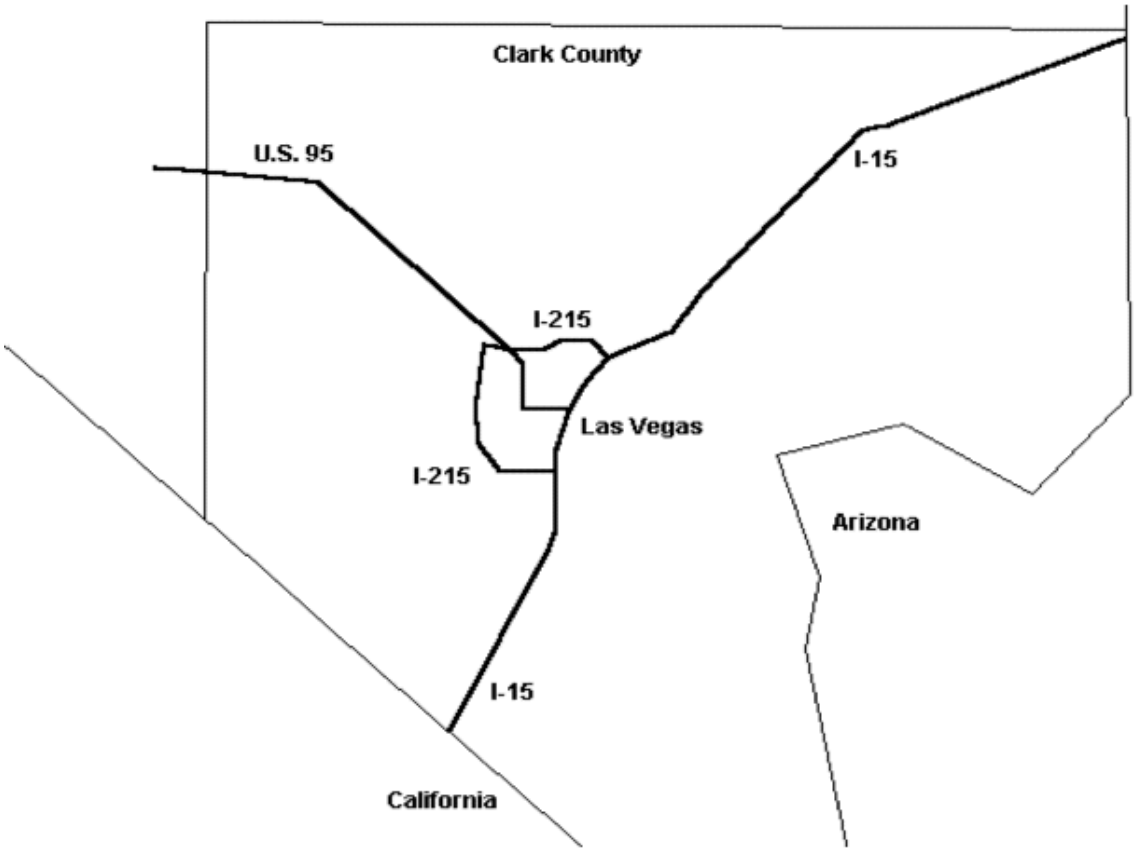

Figure A.2. Routes analyzed in this study. 1 = from the northeast through downtown (I-15 to 95), 2 = from south through downtown (I-15 to 95), 3 = from the northeast using the Beltway (I-15 to I-215 to 95), 4 = from the south using the Beltway (I-15 to I-215 to 95).

Arizona-Nevada border to the northeastern part of the Las Vegas metropolitan area and then follows the planned I-215 across the northern portion of Las Vegas. In the northwestern part of the Las Vegas metropolitan area, the route exits I-215 and continues northwest on U.S. 95 out of Clark County. The route named ”from the south using the beltway“ follows I-15 from the California-Nevada border to Las Vegas, near the southwestern corner of the McCarran International Airport and then proceeds west and then north on I-215. At the junction with U.S. 95, the route leaves I-215 and proceeds northwest out of Clark County.

2.2.2 Analysis of Routes Using the HIGHWAY Model

The total travel distance, the fraction of travel in each population density zone, and the average population density of each zone are necessary inputs to the RADTRAN computer code. HIGHWAY computer code was run using 1990 census block group data, the latest suitable data available. For each route segment, the HIGHWAY computer code uses the characteristics and populations of the census block to assign the segment to one or more of 12 population density zones. For each route segment, the NRC staff reassigned the route segment to higher population density categories in an attempt to represent future population growth of Clark County. The routing data from the HIGHWAY computer code, which makes use of 12 population density zones, were collapsed into 3 zones (i.e., rural, suburban, and urban) to simplify the analysis performed by the RADTRAN computer code. The results of the process are displayed in Table 1. The columns entitled “1990 population” display the input that the RADTRAN computer code would have considered based on 1990 Census data. The columns entitled “Future population” display the input that was considered using the RADTRAN computer code analysis for this Addendum. The parameters in the “future population” columns are based only on the staff’s anticipation of substantial future population growth. Given that SNF shipments would occur over perhaps 40 to 60 years beginning about 2010, forecasting of population densities and highway routes are more reasonable assumptions than relying on the populations reported in the 1990 Census.

2.2.3 The RADTRAN Model

The RADTRAN computer code (Neuhauser 1984, 1992) was used to model the incident-free radiological exposure and the probabilities and consequences of radiological releases resulting from accidents. The incident-free risks are dependent on the radiation dose rate from the shipment, number of shipments, package dimensions, route distance, vehicle speed, and population densities along the travel routes. The accident risks are dependent on the radiological inventory, accident severity, probability of occurrence for each accident category, and the amount of inventory of radioactive material released, aerosolized, and inhaled, as well as the dispersibility of the material based upon the chemical and physical properties. Selected information considered by the NRC staff in using the RADTRAN computer code is given in Appendix 3.

For incident-free transportation, the RADTRAN computer code calculates total body doses for the transport crew and for the general public. The NRC staff assumed that the radiation source is characterized for the analysis by the radiation dose rate at 1 m from the transportation package surface. The regulatory limit found at 49 CFR 173.441 is 0.1 mSv/hour [10 mrem/hour] at 2 m [6.6 ft] from the outer lateral surfaces of the vehicle. The NRC staff assumed 0.13 mSv/hour [13 mrem/hour] at 1 m [3.3 ft] rate because it corresponds to 0.10 mSv/hour [10 mrem/hour] at 2 m [6.6 ft], the regulatory limit. This analysis used the conservative assumption that for all shipments the radiation level would be

at exactly the regulatory limit. Based on shipping experience, actual radiation levels are expected to be lower than the regulatory limit level that was assumed in this analysis.

The NRC staff made the conservative assumption that the transport crew consists of four people, two in the cab of the truck and two in an escort vehicle. The NRC staff assumed that each of these persons would be exposed at the 0.02 mSv/hour (2 mrem/hour) regulatory limit (found at 49 CFR 177.842) that applies in the cabs of motor vehicles. The people in the vehicle would realistically be expected to receive substantially less dose than the escort drivers because the occupants of the escort vehicle would be farther from the SNF package than the drivers. The NRC staff also made the conservative assumption that the escort vehicle and its two occupants would accompany the truck the entire time it was in Clark County. This assumption results in the situation where the escort vehicle accompanies the truck for a longer distance than required by NRC. Consequently, these assumptions lead to an overestimate of the doses to the transport crew.

Table 1. Transportation route parameters for RADTRAN analysis

		1990 population [a]		Future population [b]	
	Roadway population density zone [c]	Distance (km)	Average population density (persons/km^2)	Distance (km)	Average population density (persons/km^2)
From northeast using beltway	Rural	217.6	1.9	183.6	3.8
	Suburban	1.3	89.8	23.0	453.3
	Urban	0.0	NA	12.2	2505.6
	Total [d]	218.9		218.9	
From northeast through downtown	Rural	204.5	1.7	183.8	3.9
	Suburban	14.3	604.6	31.4	463.5
	Urban	11.3	2,231.8	15.0	2531.9
	Total [d]	230.1		230.1	
From south through downtown	Rural	141.5	2.2	118.0	6.2
	Suburban	15.4	431.8	25.1	371.2
	Urban	8.9	2259.6	22.7	3210.3
	Total [d]	165.8		165.8	
From south using beltway	Rural	149.8	3.8	118.0	6.2
	Suburban	24.8	342.9	33.2	491.3
	Urban	2.6	1764.7	25.9	2498.0
	Total [d]	177.0		177.0	

[a] Based on the HIGHWAY computer code analysis of 1990 Census data.

[b] Based on NRC staff estimate of future population densities along routes. The NRC staff used these values in the RADTRAN computer code analyses.

[c] "Rural" is defined as populations less than 54 persons/km^2 (140 persons/mi^2). "Suburban" is defined as population densities between 54 and 1,284 persons/km^2 (140 and 3325 persons/mi^2). "Urban" is defined as population densities greater than 1,284 persons/km^2 (3325 persons/mi^2).

[d] Totals may not match sums of entries because of rounding.

In comments on the draft Addendum 1, the public expressed concerns about radiation doses to truck inspectors at ports of entry and doses to the public during periods when the highways are particularly congested. While there are a number of ways to reduce the magnitude of such exposures, the NRC staff introduced two additional conservative assumptions into the RADTRAN computer code analysis to account for these concerns. First, the NRC staff assumed that the trucks would travel at lower speeds than is typical for interstate highway travel; 55 mph in rural areas, 25 mph in suburban areas, and 15 mph in urban areas. Second, the NRC staff assumed that the trucks made stops at a rate of 0.011 hours/km of travel. Because each truck traveled at least 165.8 km (104 mi), every truck was assumed to stop for at least 1.8 hours (109 minutes). Further, the NRC staff assumed that for the entire stop period, 30 members of the public were located 20 m (66 feet) from the truck, and that all members of the transport crew continued to receive 2 mrem/hour during the stop. As a practical matter, the NRC staff believe that these conditions would seldom be exceeded for an individual shipment, and that typical shipments would move at normal highway speeds throughout the urban and suburban areas, and that shorter, less frequent stops would be the norm.

Each truck shipment of multiple fuel assemblies was modeled as a single package with a homogeneous distribution of the radiological inventory. Both point- and line-source approximations were used based upon the distance between the exposed individuals and the radiation source. The characteristic dimension (known in the RADTRAN computer code as the variable PKGSIZ) is the largest linear dimension of the configuration and is used in the line-source approximation to calculate total dose; 5 m [16.5 ft] was the assumed length of the source. The radiation dose to the public from the casks was assumed to consist entirely of gamma radiation for calculation of the incident-free dose. This assumption is appropriate since the regulatory limits were used and the neutron and gamma radiation is attenuated at nearly identical rates up to about 700 m (2,296 feet) (neutrons are attenuated more rapidly beyond 700 m).

For releases of radioactive material resulting from postulated accidents, the RADTRAN computer code uses a dispersibility category to determine the fractions of the total inventory that are aerosolized and respirable. The analysis reflects the dispersibility category for each isotope and considered the release fractions based on the type of package as a function of accident severity.

Accident risks include acute fatalities and latent risk of fatal cancer (from chronic exposure) for both the current and future generations. The accident risk (expected value of dose from accidents) is the summation of the products of estimated dose for each accident severity category and the associated probability of occurrence for the category. To provide a conservative estimate of potential accident effects, the NRC staff assumed high burnup fuel (62,000 MWd/MTU). Table 2 lists the characteristics of SNF assumed for the accident analysis.

Radiation exposures are reported as collective dose to a population (person-Sv [person-rem]) and the dose to the maximally exposed individual (mSv [mrem]). Health risks from exposure to radiation are reported as estimated lifetime risk of fatal cancer (LRFC) resulting from incident-free transportation of SNF and from highway accidents involving potential radiation releases. Expected fatalities from truck accidents not involving radiation releases are also reported.

A National Academy of Sciences report (NAS 1990, Table 4-2), commonly called the BEIR V report, gives estimates of the number of cancer deaths expected to occur from a continuous exposure of 10 mSv/year [1 rem/year] above background from age 18 until age 65. This value results in a risk factor of 4.0×10^{-2} LRFC per person-Sv [4.0×10^{-4} LRFC per person-rem] that is most applicable to occupational exposure. The BEIR V report also estimates the number of cancer deaths expected to occur from a continuous lifetime exposure of 1 mSv/year [100 mrem/year] above background, which results in a risk factor of 5.0×10^{-2} LRFC per person-Sv [5.0×10^{-4} LRFC per person-rem] that is most applicable to exposure of the general public. The general public LRFC risk factor is slightly higher than the occupational risk factor because the general public dose is assumed to be experienced by people of all ages while the occupational exposures are assumed to be experienced only by people from age 18 until age 65. Children and adolescents are presumed to be more susceptible to radiation-induced health effects than adults.

Table 2. Radionuclide inventory for the SNF shipments[1]

Isotope	PWR fuel in GA-4 cask (Curies)	Physical/ chemical group	Dispersibility category	Isotope	PWR fuel in GA-4 cask (Curies)	Physical/ chemical group	Dispersibility category
^{51}Cr	7.40E-16	SOLID	2	^{127m}Te	2.12E-01	SOLID	2
^{54}Mn	4.80E+01	SOLID	2	^{134}Cs	1.09E+05	VOLATILE	7
^{55}Fe	3.82E+03	SOLID	2	^{137}Cs	3.21E+05	VOLATILE	7
^{59}Fe	3.84E-10	SOLID	2	^{137m}Ba	3.03E+05	SOLID	2
^{58}Co	3.67E-04	SOLID	2	^{141}Ce	2.71E-11	SOLID	2
^{60}Co	1.20E+04	SOLID	2	^{144}Ce	2.21E+04	SOLID	2
^{85}Kr	1.96E+04	GAS	10	^{144}Pr	2.21E+04	SOLID	2
^{89}Sr	1.42E-05	SOLID	2	^{147}Pm	9.17E+04	SOLID	2
^{90}Sr	2.20E+05	SOLID	2	^{154}Eu	1.77E+04	SOLID	2
^{91}Y	5.81E-04	SOLID	2	^{238}Pu	1.72E+04	SOLID	2
^{95}Zr	1.78E-04	SOLID	2	^{239}Pu	7.09E+02	SOLID	2
^{95}Nb	1.24E-02	SOLID	2	^{240}Pu	1.32E+03	SOLID	2
^{103}Ru	2.40E-08	VOLATILE	7	^{241}Pu	2.88E+05	SOLID	2
^{106}Ru	4.04E+04	VOLATILE	7	^{241}Am	3.17E+03	SOLID	2
^{125}Sb	5.80E+03	SOLID	2	^{242}Cm	1.14E+02	SOLID	2
^{125m}Te	1.63E+02	SOLID	2	^{244}Cm	2.18E+04	SOLID	2
^{127}Te	2.09E-01	SOLID	2				
				Total	1.52E+06		

[1]Based on an ORIGEN-ARP computer code calculation performed by B. Broadhead, Oak Ridge National Laboratory, on June 10, 1999. The ORIGEN-ARP computer code was used to generate an updated radionuclide source term that assumed a specific power of 28.3 MW/MTU, a burnup of 62,000 MWd/MTU in 4 fuel cycles, cycle length of 548 days with no downtime between each cycle, 5 year cooling time, 5% fuel enrichment, and cross sections libraries for a 15 × 15 pressurized water reactor fuel assembly.

Because doses fall off quickly with distance from the route, persons close to the route receive and account for much more of the population dose than those who live some distance from the route. The contributions to population doses from exposure to persons living more than 0.8 km [0.5 mile] from the route is negligible. Thus, the affected population was assumed to be residents of and visitors to Clark County, Nevada within 0.8 km [0.5 mile] of the route assumed to be followed by the trucks transporting SNF.

2.3 CUMULATIVE HEALTH RISKS OF SPENT FUEL TRANSPORTATION

Health risks associated with SNF transport include both those associated with radiation exposure and the nonradiological risks associated with the assumed movement of trucks carrying SNF through the Clark County, Nevada area (i.e., traffic accidents).

2.3.1 Radiological Risks

Radiation exposure can occur in two ways—exposure to radiation emitted by the SNF cask during routine (incident-free) transport and exposures in the event of an accident that leads to release of radioactive material. For incident-free transportation, the NRC staff used the RADTRAN computer code to calculate total body doses to the transport crew and the general public. The radiation source is characterized for the RADTRAN computer code by the radiation dose rate at 1 m from the package surface.

Potential radiological accident effects include both acute fatalities resulting from very high radiation exposure (that might occur in the unlikely event of failure of an SNF shipping container or cask), and the LRFC resulting from radiation exposure that occur some time after the postulated accident. Accident risk is estimated by summing the product of estimated dose and the associated probability of occurrence for each of the accident-severity categories analyzed by the RADTRAN computer code.

The cumulative radiation exposure estimated by the NRC staff is provided in Table 3. The corresponding transportation health risks are provided in Table 4. Radiation doses to the population and transport crews were converted to LRFC using the risk coefficient suggested by the National Academy of Sciences (ICRP 1991; NAS 1990). It is important to note that LRFC figures represent cumulative health risks to the entire population exposed to radiation from the shipments. More simply put, the LRFC figures represent the additional number of total potential fatalities assumed within the Clark County population due to the shipment of all of the SNF over the entire life of the transportation campaign to the repository. Table 4 shows that, using the bounding assumptions for this study, between 2 and 3 excess fatal cancers are predicted. The sum of incident-free and accident risks is 2.592 LRFC for the southern route using the beltway; other scenarios have lower estimated risks. More simply put, the LRFC figures represent the additional number of total potential fatalities assumed within the Clark County population due to the shipment of all of the SNF over the entire life of the transportation campaign to the repository. Table 4 shows that, using the bounding assumptions for this study, between 2 and 3 excess fatal cancers are predicted. The sum of incident-free and accident risks is 2.592 LRFC for the southern route using the beltway over the entre life of the transportation campaign to the repository; other scenarios have lower estimated risks.

To put this risk into perspective, the average incidence of lifetime fatal cancer in the U.S. is about 0.25 [25 percent]. Assuming a Clark County population of about 1,600,000 and an average life expectancy of 70 years, this lifetime incidence of fatal cancer would correspond to about 5,700 LRFC/year. Also, in the Clark County area, the average radiation exposures resulting from cosmic and naturally occurring terrestrial gamma radiation are 0.75 to 0.77 mSv/year [75 to 77 mrem/year].[10] Assuming a Clark County population of about 1,600,000 this natural radiation leads to a risk estimate of about 60 LRFC/year. The average annual excess risk to the Clark County population from SNF transport is less than 0.050 LRFC/year which is a risk estimate of 1,200 times less than the estimate for background radiation and more than 100,000 times less than the average incidence of fatal cancer due to all causes.

The highest estimated risk to the crews is 0.852 LRFC. This already-small risk would be spread over the 40- to 60-year period during which SNF would be transported to the repository. On an annual basis, the crew risk averages about 0.014 LRFC per year of SNF transport as a result of radiation exposures.

[10] This outdoor dose rate estimate was provided by H. L. Beck (H. L. Beck, Director, Environmental Sciences Division, Environmental Measurements Laboratory, U.S. Department of Energy, New York, personal communication via electronic mail to A. K. Roecklein, NRC, Rockville, Maryland., Nov. 4, 1998) and based on extensive background radiation measurements summarized, in part, in NCRP Report No. 94, *Exposure of the Population in the United States and Canada from Natural Background Radiation*, National Council on Radiation Protection and Measurements, Bethesda, Maryland., Dec. 30, 1987.

Table 3. Estimated cumulative radiation exposure resulting from SNF transport in Clark County[a]

	Radiation exposure (person-Sv)[b]		
	Incident-free transport		Transport accidents
	Crew[c]	Public[d]	Public
From northeast using beltway without license renewal	12.8	27.7	3.05
From northeast using beltway with license renewal	19.3	41.4	4.57
From northeast through downtown without license renewal	14.2	29.0	4.02
From northeast through downtown with license renewal	21.3	43.5	6.03
From south using beltway without license renewal	13.2	29.0	5.42
From south using beltway with license renewal	19.7	43.7	8.13
From south through downtown without license renewal	11.8	27.4	4.65
From south through downtown with license renewal	17.7	41.1	6.97

[a] Transportation risks were calculated using RADTRAN version 4.0.19.SI, dated March 16, 1999. Access to RADTRAN 4 was furnished on TRANSNET computer system by the U.S. Department of Energy's Transportation Technology Center at Sandia National Laboratories.

[b] 1 person Sv = 100 person-rem.

[c] Transport crew size was assumed to be 4 persons (2 people in the truck and 2 people in the escort vehicle). Crew dose is for the time spent driving In Clark County, approximately 166 to 230 km (approximately 100 to 145 miles); the dose involved in driving to Clark County is not included.

[d] The incident-free risk to the public does not include the risk to the crew.

Table 4. Cumulative radiological transportation risks resulting from SNF transport in Clark County[a]

	Estimated lifetime risk of fatal cancer (LRFC)[b]		
	Incident-free risk		Accident risk
	Crew[c]	Public[d]	Public
From northeast using beltway without license renewal	0.512	1.385	0.153
From northeast using beltway with license renewal	0.772	2.070	0.229
From northeast through downtown without license renewal	0.568	1.450	0.201
From northeast through downtown with license renewal	0.852	2.175	0.302
From south using beltway without license renewal	0.528	1.450	0.271
From south using beltway with license renewal	0.788	2.185	0.407
From south through downtown without license renewal	0.472	1.370	0.233
From south through downtown with license renewal	0.708	2.055	0.349

[a] Transportation risks were calculated using RADTRAN (v. 4.0.19.SI., dated March 16, 1999. Access to the RADTRAN computer code was furnished on TRANSNET computer system by the U.S. Department of Energy's Transportation Technology Center at Sandia National Laboratories.

[b] For crew members, the dose conversion factor was 0.0004 estimated lifetime risk of fatal cancer (LRFC) per person-rem, and for the general public, 0.0005 LRFC per person-rem. The U.S. average lifetime risk of fatal cancer from all causes is approximately 0.25.

[c] Transport crew size was assumed to be 4 persons (2 people in the truck and 2 people in the escort vehicle). Crew dose is for the time spent driving In Clark County, approximately 166 to 230 km (approximately 100 to 145 miles); the dose involved in driving to Clark County is not included.

[d] The incident-free risk to the public does not include the risk to the crew.

The hypothetical maximally exposed individual would for incident-free transport receive 0.40 mSv [40 mrem] for the duration of shipments, about 0.16 percent of the average 70-year dose from background sources.[11] The maximally exposed individual radiation dose is based on a hypothetical individual member of the public located in the open (i.e., without the shielding offered by buildings or vehicles) 30 m [98 ft] from the highway during the entire duration of shipments (a very conservative assumption). This dose is the estimated risk from incident-free transport.

The above estimates of radiation dose are consistent with the doses reported in 10 CFR Part 51, Table S-4. Table S-4 reports estimates of 0.04 person-Sv [4 person-rem] per reactor year for transportation workers, and 0.03 person-Sv [3 person-rem] per reactor year for the general public. Assuming that 100 nuclear power plants operate for 60 years, Table S-4 leads to estimated occupational and general public doses of 240 person-Sv [24,000 person-rem] and 180 person-Sv [18,000 person-rem] for transportation workers and the general public, respectively. Comparing these dose estimates with the highest corresponding doses in Table 3 shows that the estimated cumulative dose to the general public from incident-free transportation of all SNF through the Las Vegas area is less than 25 percent of the cumulative dose from all fuel and waste transportation calculated from Table S-4. In light of the many conservative assumptions made in this analysis, the NRC staff concludes that the radiological impacts of the shipment of SNF are small and are acceptably addressed using the generic impacts methodology of Table S-4 for individual nuclear power plant operating license renewal purposes.

2.3.2 Nonradiological Risks

The NRC staff assessed the impacts of nonradiological truck accidents that may occur during the transport of SNF to the repository. A nonradiological accident is a truck accident in which the property damage, injuries or fatalities are caused by the force of the impact; no release of or exposure to radiological materials occurs as a result of the truck accident. Data on national accident statistics have been compiled from a number of sources by the U.S. Department of Transportation (DOT), Bureau of Transportation Statistics, between 1975 and 1995. Since 1990, data have been collected on the number of accidents, injuries, and fatalities per 100 million truck-miles (DOT 1999). Based upon the accident rate data from 1990 to 1995, the average rate of large truck accidents is 145 per 100 million truck-km [233 per 100 million truck-miles], the average rate of injury is 13 per 100 million truck-km [21 per 100 million truck-miles], and the average fatality is 0.26 per 100 million truck-km [0.42 per 100 million truck-miles]. On the basis of these statistics—along with the HIGHWAY computer code route data—the expected number of nonradiological accidents, injuries, and fatalities is calculated as shown in Table 5 for shipments during the 40-year (without license renewal) and 60-year (with license renewal) repository operations period. Over a 40- or 60-year

[11] The background radiation dose is assumed to be 3.6 mSv/year [360 mrem/year], the current estimate given for average background radiation dose in the U.S. The value is based upon the following assumptions from the National Council on Radiation Protection and Measurements as summarized in Eisenbud and Gesell (1997). Doses are given in mSv/year:

Cosmic radiation that reaches the earth at sea level	0.27
Radiation from the natural elements in the earth	0.28
Radon gas in the home from ground sources	2.00
Radiation in the human body from food and water	0.39
Average medical exposure	0.25 to 0.55
Consumer products (e.g., smoke detectors)	0.10

period, these risks amount to very small annual risks; less than 0.0015 fatalities per year (with or without license renewal).

The NRC staff also estimated the potential human health effects of vehicle emissions of transport trucks and escort vehicles using conservative assumptions. DOE/EIS-0200-F (page E-32) presents a risk factor for latent mortality from pollution inhalation for truck travel in an urban area; 10 per 100 million truck-km (16 per 100 million truck-miles). DOE reports that no similar estimates are available for rural and suburban areas. However, comparable estimates would be much lower in suburban and rural areas because they are much less densely populated than urban areas. To develop a conservative estimate, the NRC staff assumed that escort vehicles had emissions as large as the large trucks that haul SNF. Further, the NRC staff applied the risk factor to both the urban and suburban areas. The route with the largest distance of combined urban and suburban travel was the south by the beltway route, 59.1 km (36.9 miles) (Table 1). For the license-renewal scenario, an estimate on the order of 75,000 shipments yields total vehicle travel distance of 17.8 million km (11.1 million miles) including both repository-bound and return trips for both the transport truck and the escort vehicle. Using the risk factor reported by DOE yields an expected 1.8 latent mortalities due to pollutant emissions by the transport trucks and escort vehicles for the entire campaign. Assuming a 40-year campaign, this estimate yields an expected 0.045 latent mortalities per year.

To develop a conservative estimate of the potential impact of SNF transport in Clark County, the NRC staff assumed that trucks would make 150,555 trips through the county over the campaign, assuming the license-renewal scenario (approximately 75,000 shipments plus return trips). An equivalent number of trips would be made by an escort vehicle. Using the longest route (Table 1), the one-way distance traveled would be 230.1 km (143 miles) per vehicle. Assuming all SNF transport occurs over a 40-year period, SNF transport in Clark County would involve 0.86 million vehicle km (0.54 million vehicle miles) for the trucks and the same number of vehicle kilometers for escort vehicles. The Nevada Department of Transportation (NDOT)[12] reports that in 1997 it maintained 839 miles of the 4559 miles of improved road in Clark County, and that NDOT-maintained, Clark-County roads carried 8,611 million vehicle-km (5,382 million vehicle-miles) of travel, about 56 percent of the total vehicle miles of travel in the county. Assuming that SNF shipments occur only on the NDOT-maintained roads and that highway travel does not increase before SNF shipments begin, commercial SNF transport (including both the trucks and the escort vehicles) would account for only about 0.02 percent of the vehicle miles traveled each year on NDOT-maintained roads in Clark County and slightly more than 0.01 percent of the total vehicle miles traveled in the county in a year.

The use of public roads by trucks transporting spent fuel will be required to comply with State of Nevada and local laws regulating vehicle weight and operation. All trucks are subject to registration fees and fuel taxes that have been designed to cover the costs of maintaining and repairing public roads. The use of roads for transporting spent fuel could result in additional road repair and maintenance costs, but such use would also generate additional revenues. Truck registration fees increase according to vehicle weight. The tax on diesel fuel is also designed to recover the costs of maintaining public highways. Because state

[12] *State of Nevada Transportation Facts and Figures.* Operations Analysis Division, Nevada Department of Transportation, January 1999. Accessed at http://www.nevadadot.com/about/fact/, July 23, 1999.

laws regulate and tax trucks operating in the state, the NRC staff believes that trucks transporting SNF will not cause damage and repair costs that are incommensurate with the taxes and fees the operators must pay.

Table 5. Total non-radiological truck fatalities, injuries, and accidents resulting from SNF shipments[a]

Scenario	Fatalities	Injuries	Accidents
From northeast using beltway without license renewal	0.057	2.87	31.8
From northeast using beltway with license renewal	0.086	4.30	47.7
From northeast through downtown without license renewal	0.060	3.01	33.4
From northeast through downtown with license renewal	0.090	4.52	50.2
From south using beltway without license renewal	0.046	2.32	25.7
From south using beltway with license renewal	0.070	3.48	38.6
From south through downtown without license renewal	0.043	2.17	24.1
From south through downtown with license renewal	0.065	3.26	36.2

[a] Estimates are based on mileages from the HIGHWAY computer code, and on accident, injury and fatality rates from DOT (1999).

2.4 CUMULATIVE IMPACTS OF ADDITIONAL RADIOACTIVE WASTE SHIPMENTS

In addition to SNF shipments to the proposed repository at Yucca Mountain, DOE is planning to ship quantities of high level waste (HLW) to the repository and may also ship substantial quantities of low-level radioactive wastes (LLW) to the Nevada Test Site (NTS) for disposal. These shipments would most likely be routed through Clark County, in a manner similar to the routing of SNF analyzed above. To estimate the potential cumulative effects of shipments to the NTS as well as the proposed repository, the NRC staff utilized information published in DOE's waste management programmatic EIS (DOE/EIS-0200-F) and DOE's programmatic spent nuclear fuel management EIS (DOE/EIS-0203-F). To assure that cumulative impacts are not underestimated, the NRC staff selected those alternatives in the EIS that led to the highest numbers of shipments to the NTS or Yucca Mountain.

DOE estimated that there would be up to 24,000 HLW shipments[13] to Yucca Mountain and up to 268,000 LLW shipments[14] to NTS, and up to 6,815 SNF shipments to NTS.[15] DOE assumed that the HLW shipments would have radiation doses equal to the legal limit

[13]This estimate comes from DOE/EIS-0200-F; Table 9.16-1, Centralized Alternative.

[14]This estimate is composed of 257,000 truck shipments of LLW to the Nevada Test Site and 11,000 shipments of low-level mixed waste (DOE/EIS-0200-F; Table 7.16-2, Centralized-2 Alternative and Table 6.16-2, Regionalized-3 Alternative).

[15]This estimate comes from DOE/EIS-0203-F, Table I-2, for the Centralization at NTS alternative.

(10 mrem/h at 2 m) and that LLW would have dose rates of 1 mrem/h at 1 m. To estimate the radiological effects of these shipments, the NRC staff assumed that each DOE SNF, HLW or LLW shipment was equal to a shipment of commercial SNF. For the radiological impacts of LLW, the assumption is very conservative because, as indicated by DOE's estimate of 1 mrem/hour (0.01 mSv/hour) at 1 m, LLW is generally much less radioactive than SNF. For non-radiological effects, the NRC staff assumed that each shipment would have the same effect regardless of what material was being transported.

Using highest doses and cancer risks in Tables 3 and 4 and the assumptions above, the NRC staff estimated the doses and LRFCs for shipment of DOE radioactive waste through Clark County. As shown by Tables 6 and 7, the cumulative doses and expected cancer fatalities continue to be small compared to the risk of cancer from other causes.

The non-radiological cumulative effects of radioactive waste shipment through Clark County are dominated by the very large number of LLW shipments. All SNF and DOE radioactive waste and SNF shipments through Clark County would total to more than 374,000 shipments, almost 5 times as many as SNF shipments with license renewal. Thus, between 125 and 250 non-radiological truck accidents can be expected during the 374,000 shipments of radioactive wastes through Clark County. The expected number of accident fatalities is between 0.22 and 0.46 for all shipments of radiological waste over all the years the shipments would occur. Assuming these shipments occurred over a 40-year period, between 3 and 6 traffic accidents involving trucks transporting all types of radioactive waste materials would be expected in an average year, and there would be a very small chance that a fatality would result in any one year.

2.5 SUMMARY OF SNF TRANSPORT IMPACTS

As shown in Table 4, the conservatively estimated LRFC assumed to result from radiation exposure related to transportation of SNF in Clark County over the entire 40-60 year life of the transportation campaign to the repository is between 1.6 and 2.6 (including the risk due to potential accidents) or less than 0.05 LRFC/year. For comparison, it is estimated that there would be about 5700 LRFC for each year in Clark County from causes unrelated to SNF transport.

Non-radiological truck-vehicle accidents are possible as a result of transporting SNF through Clark County. The probability of a fatality is estimated to be less than 0.090 under all scenarios. For license renewal, the combined radiological and non-radiological risk to the general public is estimated to be between about 2.3 and 2.6 fatalities over the entire course of SNF transport through Clark County, including incident-free and accident risks. Without license renewal, the estimated is between about 1.5 and 1.8 fatalities.

The above analysis shows that, even with conservative assumptions, the cumulative radiological and accident risks of SNF transport in Clark County are small. It also shows that alternative assumptions are bounded by this analysis and would result in even smaller human health impacts. Transporting SNF by rail rather than by truck would reduce human health effects by reducing the number of shipments and the likelihood of accidents. Shipping SNF via the proposed beltway would reduce health impacts compared to shipping via the current interstate highway system. In addition, shipping SNF via the proposed beltway would reduce health impacts compared to shipping via the current interstate highway system. The implementation of such mitigative measures must await future decisions that fall well outside

of the scope of this rulemaking. DOE will address transportation impacts, mitigation measures, and alternative transportation modes in its EIS for the proposed repository at Yucca Mountain.

Table 6. Estimated cumulative radiation exposure resulting from transport of SNF and DOE radioactive waste in Clark County[a]

	Radiation exposure (person-Sv)[b]		
	Incident-free transport		Transport accidents
	Crew[c]	Public[d]	Public
Highest values from Table 3	21.3	43.7	8.13
Doses from DOE HLW shipments	6.8	13.9	2.59
Doses from DOE LLW shipments	75.8	156.0	28.9
Doses from DOE SNF shipments	1.9	4.0	0.74
Maximum cumulative dose from all radioactive waste shipments	84.0	218.0	40.3

[a] Transportation doses were calculated using the RADTRAN computer code(version 4.0.19.SI, dated March 16, 1999). Access to the RADTRAN computer code was furnished on TRANSNET computer system by the U.S. Department of Energy's Transportation Technology Center at Sandia National Laboratories.
[b] 1 person Sv = 100 person-rem.
[c] Transport crew size was assumed to be 4 persons (2 people in the truck and 2 people in the escort vehicle). Crew dose is for the time spent driving In Clark County, approximately 166 to 230 km (approximately 100 to 145 miles); the dose involved in driving to Clark County is not included.
[d] The incident-free dose to the public does not include the dose to the crew.

Table 7. Cumulative radiological transportation risks resulting from transport of SNF and DOE radioactive wastes in Clark County[a]

	Estimated lifetime risk of fatal cancer[b]		
	Incident-free risk		Accident risk
	Crew[c]	Public[d]	Public
Highest values from Table 4	0.85	2.19	0.41
Risks from DOE HLW shipments	0.27	0.69	0.13
Risks from DOE LLW shipments	3.0	7.8	1.5
Risks from DOE SNF shipments	0.8	0.2	0.09
Maximum cumulative risk from all radioactive waste shipments	3.9	10.9	2.1

[a] Transportation risks were calculated using the RADTRAN computer code (v. 4.0.19.SI., dated March 16, 1999). Access to the RADTRAN computer code was furnished on TRANSNET computer system by the U.S. Department of Energy's Transportation Technology Center at Sandia National Laboratories.
[b] For crew members, the dose conversion factor was 0.0004 estimated lifetime risk of fatal cancer (LRFC) per person-rem, and for the public, 0.0005 LRFC per person-rem.
[c] Transport crew size was assumed to be 4 persons (2 people in the truck and 2 people in the escort vehicle). Crew dose is for the time spent driving In Clark County, approximately 166 to 230 km (approximately 100 to 145 miles); the dose involved in driving to Clark County is not included.
[d] The incident-free risk to the public does not include the risk to the crew.

2.6 ENVIRONMENTAL JUSTICE

Environmental justice refers to a Federal policy in which Federal actions should not result in disproportionately high and adverse environmental impacts on low-income or minority populations. Executive Order 12898 (59 FR 7629) directs Federal executive agencies to consider environmental justice under NEPA. Although the Executive Order does not apply to the NRC, an independent agency, the NRC has stated that it will comply with the Executive Order.

As explained earlier, only people within 0.8 km [0.5 mile] of the route followed by the trucks transporting SNF would receive any appreciable radiation dose, even under accident scenarios. Consequently, the NRC staff examined available data on low-income and minority populations within that distance along transportation routes to determine if there was reason to suspect that SNF transport impacts might fall disproportionately on low-income or minority groups. To this end, the NRC staff examined the racial, ethnic and population characteristics of Clark County as a whole and the same characteristics of the transportation routes.

Table 8 describes the overall racial and ethnic characteristics for the population groups in Clark County (Bureau of the Census 1990).[16]

Nevada is one of the fastest growing states in the U.S., with Clark County growing faster than any other Nevada county. The 1990 census listed 741,459 people as living in the county (Census Bureau Database C90STF1A; http://venus.census.gov/cdrom/lookup/929978369, accessed June 21, 1999). Clark county's projected 1999 population was 1,337,400, and the projected 2004 population is 1,656,840 (Nevada State Demographer June 1, 1998). Las Vegas accounted for most of the County's growth. In July 1998, an estimated 448,244 persons resided in Las Vegas, a 6 percent increase since July 1997. In addition to residents, Las Vegas has many visitors staying in hotels.

Table 9 reports the percentage of ethnic and racial groups living within 0.5 mile (0.8 km) of the transportation routes. These data were assembled using an Oak Ridge National Laboratory computer program that integrates Map-Info™ with the Census Bureau data available on CD-ROM (U.S. Census Database C90STF1A, 1990). 1990 data were used to be consistent with the population density estimates used in the HIGHWAY computer code. Table 9 shows that only for the route from the northeast through downtown would the fraction of a minority within the 0.8-km (0.5-mile) corridor adjacent to the route be significantly higher than the county average.

[16] Per Office of Management and Budget 1998 Directive No. 15, the Census Bureau uses four race categories (White, Black, American Indian and Alaska native, Asian and Pacific Islander) and two ethnicity categories, Hispanic and non-Hispanic (Bureau of the Census 1998).

Table 8. 1990 distribution (in percent) of racial and ethnic population groups in Clark County, Nevada

	White	Black	American Indian & Alaska native	Asian & Pacific Islander
Non-Hispanic	75.4	9.3	0.7	3.3
Hispanic	5.9	0.3	0.1	0.2
Total	81.3	9.6	0.8	3.5

Source: U.S. Census Bureau, 1990. Database C90STF1A, Summary Level State—County. http//venus.census.gov/cdrom/lookup

Table 9. Ethnic and racial groups (in percent) living within 0.5 mile (0.8 km) of the transportation routes

	White	Black	American Indian & Alaska native	Asian & Pacific Islander
From the northeast using beltway				
Non-Hispanic	82.9	6.1	1.0	1.8
Hispanic	4.3	3.6	0.1	0.03
From the northeast through downtown				
Non-Hispanic	61.7	25.2	0.7	2.2
Hispanic	4.8	0.4	0.1	0.2
From south using beltway				
Non-Hispanic	88.6	2.7	0.7	2.2
Hispanic	4.1	0.06	0.04	0.06
From south through downtown				
Non-Hispanic	77.5	9.2	0.7	2.8
Hispanic	5.4	0.2	0.1	0.2

Source: U.S. Bureau of the Census. 1990. U.S. Census Database C90STF1A, 1990.

The NRC staff also examined the distribution of low-income populations. The 1995 median family income for Nevada families was estimated to be $36,300; Clark County was slightly above the State average with a median family income of $38,184 (U.S. Census Bureau, http://www.census.govdgi-bin/hhes/saipe93/gettable.p1, Table C95-32; accessed June 23, 1999). The estimated number of persons living below the poverty level for 1989 in Clark County was 76,737, representing approximately 10.4 percent of the total population (the figures are based on 1990 Census data). Compared to the U.S. average, the State of Nevada has been substantially below the national average in percentages of people living in poverty. For 1995 through 1997, 13.6 percent of the U.S. population lived in poverty, while 10.1 percent of the residents in Nevada lived in poverty (Bureau of the Census 1999).

Accurately examining income distribution is difficult because the poverty data are aggregated over larger areas than are data for ethnic and racial groups. On the basis of 1990 census data, the NRC staff estimated the percent of the populations in poverty along the routes as shown in Table 10. The only route that would encounter higher than the U.S. average of low-income persons is the route from the northeast through downtown.

Table 10. Fraction of persons along the transportation routes who are in poverty (percent) [a]

From the northeast using beltway	8.3
From the northeast through downtown	14.8
From the south using beltway	6.8
From the south through downtown	10.9
County as a whole	10.4

[a] Based on 1990 census data.

The analysis suggests that the routes through downtown may run through areas containing a higher proportion of low-income and minority groups than the beltway routes. However, as discussed in Sections 2.3 and 2.4, the radiological and nonradiological impacts of transportation of SNF are small. In addition, these small impacts are dispersed throughout the entire routes and do not appear to fall disproportionately in any one area. Based on the above analysis the NRC staff concludes the overall impacts of transportation of SNF will not likely be disproportionately high or adverse for any minority or low-income population.

3. IMPLICATIONS OF HIGHER BURNUP FUEL FOR THE CONCLUSIONS IN TABLE S-4

3.1 BACKGROUND

The license renewal rule amending 10 CFR Part 51 promulgated on December 18, 1996 (61 FR 66537) gave license renewal applicants the responsibility to comply with the existing requirements of 10 CFR 51.52. Section 51.52(a) specifies six conditions that must be met in order for an applicant to adopt the values in Table S-4 of that section, which represent the contribution of transportation to the environmental costs of licensing the reactor. If the six conditions are not met, an applicant must submit a full analysis of the environmental impacts of transportation of fuel and waste in accordance with §51.52(b). Two of the conditions limit the fuel enrichment level and the burnup level . Paragraph 51.52(a)(2) requires a uranium-235 enrichment not exceeding 4 percent by weight in the fuel. Paragraph 51.52(a)(3)

requires that "The average level of irradiation of the irradiated fuel from the reactor does not exceed 33,000 megawatt-days per metric ton, and no irradiated fuel assembly is shipped until at least 90 days after it is discharged from the reactor." These two limiting conditions have been exceeded through nuclear power plant license amendments permitting incremental increases in the burnup of fuel. During the 1990s, the NRC has reviewed and approved vendor topical reports requesting approval for higher burnup level. (Letter from M. J. Virgilio, NRC, to N. J. Liparulo, Westinghouse Electric Corporation, "Acceptance for Referencing of Topical Report WCAP-12488, 'Westinghouse Fuel Criteria Evaluation Process," dated July 27, 1994; FCF-BAW 10186P-A, "Extended Burnup Evaluation," June 12, 1997; and Memorandum from T. E. Collins to B. W. Sheron, "Waiver of CRGR Review of EMF-85-74(P), Revision O, Supplements 1 and 2 Safety Evaluation," dated February 9, 1998). Approved average burnup for the peak rod now ranges from 50,000 to 62,000 MWd/MTU. The higher burnup levels are associated with uranium-235 enrichment levels of up to 5 percent by weight. Thus, it is likely that at the time of a submittal of a license renewal application, many nuclear power plants will be operating at higher fuel burnup and will be using higher enrichment fuel.

Further, the assumed minimum time for shipping spent fuel of 90 days after discharge from the reactor was based on the assumption that the spent fuel would be shipped to a reprocessing facility. Reprocessing spent fuel is currently not a reasonable assumption. Currently, the reasonable assumption is that spent fuel will be shipped to an interim storage facility or to an ultimate repository and would have been discharged from the reactor at least 5 years earlier and, in some cases, as many as 40 years earlier. In fact, the current practice of NRC issuing certificates of compliance for casks used for shipment of power reactor fuel is to specify 5 years as the minimum cooling period. The assumption of 5-year cooling is an extremely conservative assumption. For example, there is almost 40,000 tons of spent fuel in storage now, some of which has been stored for decades. At the earliest, if Yucca Mountain were found suitable and if DOE were successful in obtaining an NRC license, it will be at least 11 years from now until Yucca Mountain would be ready to accept spent fuel for storage. It would take many years to work off the backlog of stored spent fuel.

3.2 ANALYSES

Because many nuclear power plants are now operating with higher enriched fuel irradiated to higher burnup levels, motivated in part by a desire to minimize spent fuel inventory, and because of public concerns about transportation impacts of higher burnup SNF, the NRC staff examined recent technical literature on, and performed additional analyses of the characteristics of higher burnup SNF. The analyses summarized below address two questions: the extent to which higher burnup SNF might have greater incident-free transportation impacts than spent fuel with the characteristics assumed for Table S-4, whether accidents involving higher burnup SNF might have unacceptable impacts, and whether accidents involving higher burnup SNF might cause criticality during a transportation accident.

For incident-free transportation, the principal concern is whether, because of its different radiological composition, higher burnup fuel would require more shipments and larger transportation impacts than predicted by Table S-4. Quantification of the radiation emissions for reactor fuels is a complex process. However, there are several insights that allow for scaling of the radioactive emissions from one burnup level to another. For the gamma-ray

sources, the scaling due to burnup is a linear relationship, i.e. a doubling of the burnup yields, a doubling of the gamma-ray emissions and, typically, a doubling of the dose rate due to gamma rays. The scaling for neutrons is not linear. Neutron emissions increase as the fourth power of the burnup ratios given the same initial enrichments; that is, doubling burnup increases the neutron emissions rate about sixteen times. In practice, however, higher burnup fuels require higher initial enrichments, such that neutron emissions typically increase as the square or cube of the burnup ratios. For example, analysis by Parks et al. (1987) showed that for a 35,000 MWd/MTU and a 60,000 MWd/MTU (burnup ratio 1.71) the neutron emissions ratio is 4.28 (less than the third power of the burnup ratio).

The increase in the total radiation dose rate due to higher burnup is complicated because the total dose rate is the sum of the gamma-ray and neutron dose rates. For nominal burnups, the dose rates at the surface and 2-m from the surface are approximately 90 percent gamma-rays and 10 percent neutrons. Indeed, Westfall et al. (1990) found that for a transportation cask that was designed for use in DOE spent fuel applications, the calculated total dose rate at 2 m for 60,000 MWd/MTU SNF was 2.19 times larger than for 35,000 MWd/MTU SNF. Thus, the total dose from a full cask of 60,000 MWd/MTU SNF would be about twice as large as the dose from a full cask of 35,000 MWd/MTU SNF. Assuming an additional increase in maximum burnup to 62,000 MWd/MTU would not invalidate that assumption given the small increase in burnup from 60,000 MWd/MTU.

The most obvious way to compensate for a doubling of the 2-m dose rate would be to halve the cask payload. This would increase the number of shipments required, but is unlikely to be pursued because of the economic and other pressures to minimize spent fuel transportation activities. In addition, under this scenario, a cask would be partially loaded (i.e. derated) with the remaining locations in the basket left empty. However, because the cask would have to be certified for higher burnup to carry even a partial load, the license submittal could easily analyze the use of inserts, which would drastically reduce the external doses with less impact on cask capacity.

There are, however, less costly ways to accommodate higher burnup fuels. Broadhead et. al. (1992) showed that by using a modified basket and by derating the cask 15 percent (an 18-assembly payload vs a 21-assembly payload) a cask with 5-year-cooled 60,000 MWd/MTU spent fuel had a lower dose rate than a 21-assembly cask containing 35,000 MWd/MTU fuel that had cooled 5 years. While the dose rates of higher-burnup fuels decline more slowly than 35,000 MWd/MTU fuel, Broadhead et al. also showed that increasing cooling times from 5 to 15 years compensates for an increase in burnup from 35,000 to 60,000 MWd/MTU. That is, a cask designed for 5-year-cooled 35,000 MWd/MTU spent fuel should be capable of accommodating 15-year-old 60,000 MWd/MTU spent fuel without derating. Thus, where on-site storage of SNF is not too costly, transportation costs and impacts can be minimized by allowing higher burnup SNF to cool 15 years before disposal.

The above two scenarios present cases where the high burnup fuels can be placed into standard casks with little or no cask derating, while meeting radiation limits outside of the cask. Under these scenarios, the actual number of trips to a repository would be *decreased* because the number of spent fuel assemblies required for given amount of power would be smaller with higher burnup fuel. There are other scenarios in which the number of required trips is reduced by “blending” of cask loadings, in which higher-burnup fuel assemblies are placed in the middle of the cask, while lower burnup assemblies are place near the edge of the cask cavity region to absorb radiation from the inner assemblies. While this scenario

appears feasible, it has not yet been approved by NRC. A totally new cask specifically designed for high-burnup fuel is another possibility. It would only be conjecture to discuss the results of such a cask design effort, but the modified cask basket described in Broadhead et al. indicates that such a design could have little impact on the cask payload. Thus, for higher burnup fuel that is allowed to cool for at least five years before shipping, reasonable, cost-effective measures can assure that radiation limits from SNF casks can be met without increasing the number of SNF shipments. Consequently, the NRC staff concludes that use of higher burnup fuel would not lead to incident-free transportation impacts that are larger than those predicted by Table S-4.

To answer the question of how higher burnup fuel would affect accident doses, the NRC staff used the characteristics of 5 percent enriched fuel that had been burned for 62,000 MWd/MTU in its RADTRAN analysis to estimate health risks associated with accidents that release radioactive materials from a transportation cask (Table 2). The results of the analysis (Tables 3 and 4) show that higher burnup fuel has doses and health risks that are less than 15 percent of incident-free doses and health risks, and small as characterized by Table S-4.

The NRC staff also examined unlikely accident scenarios involving higher burnup fuel to determine if they could lead to a nuclear criticality event. The NRC staff examined two scenarios: failure of fuel cladding and failure of a portion of the neutron absorption material while the fuel remains in its original position. Because fuel rods are arranged in near optimum configurations for establishing and maintaining nuclear fission reactions, if the fuel cladding failed, the cask filled with water, and the fuel pellets crumbled into a pile or any other arrangement, the fuel would be farther from criticality than while they were in their original arrangement. Thus, failure of fuel cladding could not cause a criticality event.

The second hypothetical accident scenario has the neutron absorption effect at the end of the cask basket somehow lost while the fuel lattice structure remains intact. In this scenario, the fuel would remain in its optimum (for criticality) configuration, but the cask basket material which absorbs neutrons is removed from 15 cm (6 in.) of the end of the fuel rods. Analysis of several burnup levels showed that nuclear criticality would not occur, even if the cask were filled with water. Consequently, the NRC staff concludes that higher burnup SNF offers no greater criticality concerns, even in the event of unlikely occurrences.

3.3 CONCLUSIONS

Most nuclear plants are now operating with higher enriched fuel irradiated to higher burnup levels than anticipated by the analyses that led to the impact levels identified in Table S-4. The NRC staff has extensively studied the environmental impacts associated with fuel enrichment up to 5 percent uranium-235 and fuel burnup to 60,000 MWd/MTU and has found that these impacts are no greater than and likely less than the impacts described in 10 CFR 51.52(c), provided that higher burnup fuel has been removed from the reactor for at least five years before it is shipped off site.

The analysis described above showed that higher enriched, higher burnup fuel would not increase incident-free-transportation or transportation-accident impacts, and that criticality could not occur during transportation of higher burnup SNF under any foreseeable circumstance. The higher burnup levels are associated with uranium-235 enrichment levels

of up to 5 percent by weight. An increase in burnup from 60,000 MWd/MTU to 62,000 MWd/MTU will not significantly change dose levels associated with spent fuel transportation and may slightly reduce the number of shipments. Therefore, the impacts identified in Table S-4 bound the transportation impacts of higher enriched, higher burnup SNF. These conclusions are applicable to any nuclear power plant license renewal application provided higher burnup fuel has cooled at least 5 years before it is shipped off the reactor site.

4. SUMMARY AND CONCLUSIONS

This Addendum to NUREG-1437, *Generic Environmental Impact Statement for License Renewal of Nuclear Plants*, May 1996 supplements the analysis reported in Section 6.3 "Transportation," and especially Section 6.3.2, "Table S-4–Environmental Impacts of Transportation of Fuel and Waste to and From One Light-Water-Cooled Nuclear Power Reactor." This document addresses two questions generically. The first question is whether the environmental impact values contained in Table S-4 are still appropriate for use in license renewal reviews if spent fuel is transported to a single destination such as the candidate repository at Yucca Mountain, Nevada, even though the values in Table S-4 were developed from data reflecting spent fuel shipments to several destinations. The NRC staff found that the cumulative impacts of SNF transport to a single repository are small for all plants shipping spent fuel with characteristics specified in 10 CFR 51.52(c), Summary Table S-4 and for spent fuel enriched up to 5 percent uranium-235 with average burnup for the peak rod to current levels approved by NRC up to 62,000 MWd/MTU, provided higher burnup fuel is cooled for at least 5 years before being shipped off site.

The second question is whether the environmental impact values contained in Table S-4 are still appropriate for use in license renewal reviews given that applicants will be shipping spent fuel that is more highly enriched and irradiated longer than is accounted for in the analysis to develop Table S-4. The NRC staff analyzed the extent to which transportation of higher burnup SNF would cause impacts that exceed those identified in Table S-4 for incident-free transport, and for hypothetical accidents causing release of radionuclides. The NRC staff found that even under conservative higher burnup conditions, the impacts of SNF transport would not exceed those identified in Table S-4. Consequently, the NRC staff concludes that Table S-4 applies to spent fuel enriched up to 5 percent uranium-235 with average burnup for the peak rod to current levels approved by NRC up to 62,000 MWd/MTU, provided higher burnup fuel is cooled for at least 5 years before being shipped off site.

The conclusions reached in these assessments provide the bases for revising the findings and the category designation of the Transportation issue in Table 9.1, "Summary of findings on NEPA issues for license renewal of nuclear power plants," of NUREG-1437. The environmental impacts associated with these issues are applicable to all plants, the impacts are small, mitigation has been considered, and additional plant -specific mitigation measures are not warranted. The findings and category designation for the transportation issue (NUREG-1437, p. 9-15) is revised as follows:

Issue	Sections	Category	Findings
Transportation	Addendum 1, 2.4 3.3	1	SMALL. The impacts of transporting spent fuel enriched up to 5 percent uranium-235 with average burnup for the peak rod to current levels approved by NRC up to 62,000 MWd/MTU and the cumulative impacts of transporting high-level waste to a single repository, such as Yucca Mountain, Nevada are found to be consistent with the impact values contained in 10 CFR 51.52(c), Summary Table S-4--Environmental Impact of Transportation of Fuel and Waste to and from One Light-Water-Cooled Nuclear Power Reactor. If fuel enrichment or burnup conditions are not met, the applicant must submit an assessment of the implications for the environmental impact values reported in §51.52.

5. REFERENCES

AIF/NE SP-032 1985. *The Environmental Consequences of Higher Fuel Burnup*, Atomic Industrial Forum, Inc., June.

Broadhead, B. L., C. V. Parks, D. S. Joy, and J. S. Tang 1992. "Preliminary Assessment of the Benefits of Derating A Cask for Increasing Age/Burnup Capability," p. 2182 in *Proceedings of the Third International Conference on High Level Radioactive Waste Management*, Las Vegas, Nevada, April 12-16.

Clark County 1997. World Wide Web page: www.co.clark.nv.us/PUBWORKS/ beltway.htm, Clark County Department of Public Works, accessed Sep. 30, 1997.

DOE (U.S. Department of Energy) 1992. *Characteristics of Potential Repository Wastes*, Office of Civilian Radioactive Waste Management, Washington, D.C.

DOE/RW-0472. Topical Report on Actinide-Only Burnup Credit for PWR Spent Nuclear Fuel Packages, Revision 2, U. S. Department of Energy, September 1998.

DOE/EIS-200-F. Final Waste Management Programmatic Environmental Impact Statement for Managing Treatment, Storage, and Disposal of Radioactive Waste. U.S. Department of Energy, Office of Environmental Management, Washington, D.C., May 1997.

DOT (U.S. Department of Transportation) 1999. Table 3-22, Truck Occupancy Safety Data, World Wide Web page: www.bts.gov/programs/ btsprod/nts/chp3/tbl3x22.html, accessed June 26, 1999.

Dyer, G.J., and W.J. Reich, 1993. *Transportation Risk Assessment for the Oak Ridge K-25 Site Mixed Waste Disposal Initiative*, ES/ER/TM-68, Oak Ridge National Laboratory, Oak Ridge, Tenn., April.

Eisenbud, M. and T. Gesell. 1997. *Environmental Radioactivity from Natural, Industrial, and Military Sources*. Academic Press, New York, NY, February, IBSN: 0122351541.

GA 1991. General Atomics, *Final Design Drawing Package GA-4 Legal Weight Truck Spent Fuel Shipping Cask*, General Atomics Project 3462, Oct.

ICRP (International Commission on Radiological Protection) 1991. *1990 Recommendations of the International Commission on Radiological Protection*, ICRP Publication 60, Annals of the ICRP, vol. 21, No. 1-3, Pergamon Press, New York.

Institute of Medicine, Committee on Environmental Justice, Health Sciences Policy Program, Health Sciences Section. 1999. *Toward Environmental Justice—Research, Education, and Health Policy Needs*. Washington, DC. National Academy Press.

Johnson, P. E., D.S. Joy, D.B. Clarke, J.M. Jacobi 1993. *HIGHWAY 3.1-An Enhanced Highway Routing Model Program Description, Methodology, and Revised User's Manual*, ORNL/TM-12124, Oak Ridge National Laboratory, Oak Ridge, Tenn.

Joy, D.S., and P.E. Johnson 1983. *HIGHWAY, A Transportation Routing Model: Program Description and Revised User's Manual*, ORNL/TM-8759, Oak Ridge National Laboratory, Oak Ridge, Tenn.

NAS (National Academy of Sciences) 1990. *Health Effects of Exposure to Low Levels of Ionizing Radiation*, BEIR V Report, National Academy Press, Washington, D.C.

Neuhauser, K. S., Cashwell, J. W., Reardon, P. C., McNair, G. W. 1984. *A Preliminary Cost and Risk Analysis for Transporting Spent Fuel and High-Level Wastes to Candidate* SAND89-2370, *Repository Sites*, SAND84-1795, Sandia National Laboratories, Oct.

Neuhauser K. S., Kanipe, F. L 1992. RADTRAN 4: Volume 3, User Guide, SAND89-2370, Sandia National Laboratories, Jan.

Nevada State Demographer. 1998. *Official Nevada Estimate and Projections, Nevada Population Projections by County 1998–2004*, (Final 6/1/98).

Nouri, A. 1998. *Analysis of Phase II-B Results: Conceptual PWR Spent Fuel Transportation Cask*, OECD-NEA/NSC/DOC(98)1 (IPSN/98-05), Institute de Protection et de Surete Nucleaire, May.

Nuclear Waste Technical Review Board 1997. *Spent Nuclear Fuel: Balance Storage and Disposal Needs*, URL: http://www.nwtrb.gov/issues/spntfuel.html, accessed Oct. 14, 1997.

NUREG/CR-2325. *The Transportation of Radioactive Material (RAM) to and from U.S. Nuclear Power Plants, Draft Environmental Assessment*, SAND81-0118, U.S. Nuclear Regulatory Commission, Dec. 1983.

NUREG/CR-5009. *Assessment of the Use of Extended Burn up Fuel in Light Water Power Reactors* (PNL-6258), U.S. Nuclear Regulatory Commission, Feb. 1988

NUREG-1437. *Generic Environmental Impact Statement for License Renewal of Nuclear Plants*, U.S. Nuclear Regulatory Commission, May 1996.

Parks, C. V., J. V. Pace III, and O. W. Hermann 1987. "Characterization of Neutron Sources from Spent Fuel Casks," *Tran. Am. Nucl. Soc.,* **55**, p. 534.

Parks, C. V., 1989. Criticality Analysis Support for the Three Mile Island Unit 2 Fuel Removal Operations, *Nuclear Technology*, 87, pp. 660-678, November.

WASH-1238. *Environmental Survey of Transportation of Radioactive Materials to and from Nuclear Power Plants*, U.S. Atomic Energy Commission, Dec. 1972.

Westfall, R. M., 1979. Criticality Analyses of Disrupted Core Models of Three Mile Island Unit 2, ORNL/CSD/TM-106, Oak Ridge National Laboratory, December.

Westfall, R. M., R. Q. Wright, and J. Greenborg 1990. "Status of a Standard for Neutron Skyshine Calculation and Measurement," *Trans. Am. Nucl. Soc.,* **62,** p. 432.

UNSCEAR (United Nations Scientific Committee on the Effects of Atomic Radiation) 1988. *Sources, Effects, and Risks of Ionizing Radiation*, United Nations.

U.S. Dept. of Commerce. 1996. USA Counties 1996 CD-ROM. Bureau of the Census. Washington, D.C.

U.S. Dept. of Commerce. 1990. U.S. Census Database C90STF1A, 1990. Bureau of the Census. Washington, D.C.

U.S. Dept. of Commerce, 1999. *Estimated Median Household Income by County Nevada 1995*. Small Area Income and Population Estimates Program, Bureau of the Census, Washington, D.C. (Estimates released February 1999).

U.S. Dept. of Commerce. 1999. *Percent of People in Poverty, by State*. Bureau of the Census. Washington, D.C.

6. LIST OF PREPARERS

B. L. Broadhead, Oak Ridge National Laboratory, Ph.D. and M.S., Nuclear Engineering, University of Tennessee; 22 years experience in radiation shielding and spent fuel source analyses. Contribution: Analysis of higher burnup effects, Section 3.2, and higher burnup source term for RADTRAN analysis.

D. P. Cleary, U.S. Nuclear Regulatory Commission, Graduate studies in Natural Resource Economics and Environmental Policy, University of Michigan; M.A., Economics, University of Florida; B.A. Economics, University of Massachusetts; 35 years of experience in environmental assessment. Contribution: Overall project direction, Chapter 3, and Appendix 1.

P. E. Johnson, Oak Ridge National Laboratory, M.S., Geography, University of Tennessee; B.A. Geography, University of Minnesota-Duluth; 20 years of experience in transportation routing modeling. Contribution: HIGHWAY routing analysis and population projections, Sect. 2.3.

C.W. Hagan, Oak Ridge National Laboratory, M.A., English, and B.A., Biology, Virginia Polytechnic Institute and State University; 17 years of experience in technical writing. Contribution: Document management and Appendix 1.

L. N. McCold, Oak Ridge National Laboratory, M.S., Mechanical Engineering, and B.S., Physics, Oregon State University; 17 years of experience in environmental assessment. Contribution: ORNL project management and technical integration.

C. V. Parks, Oak Ridge National Laboratory, Ph.D., Nuclear Engineering, University of Tennessee; M.S., Nuclear Engineering, B.S. Nuclear Engineering and B. S. Mechanical Engineering, N. C. State University; 19 years of experience in nuclear safety analysis for transportation and storage. Contribution: Analysis of potential effects of clad failure of higher burnup fuels, Section 3.2.

W. J. Reich, Oak Ridge National Laboratory, M.S. Nuclear Engineering, University of Missouri-Rolla; B.A. Nuclear Engineering, University of Missouri-Rolla; 8 years of experience in transportation analysis and risk assessment. Contribution: RADTRAN analysis, Sect. 2.3.

B. M. Sorensen, Oak Ridge National Laboratory, Ph.D. Sociology, University of Tennessee; M.A. Urban and Regional Planning, University of Hawaii; B.F.A. Pre-Landscape Architecture, University of Hawaii; 20 years of experience in environmental impact analyses. Contribution environmental justice analysis, Section 2.6.

APPENDIX 1

STAFF RESPONSES TO PUBLIC COMMENTS ON ADDENDUM 1 AND THE PROPOSED RULE

THE SCOPING PROCESS

The proposed amendments to 10 CFR 51.53(c)(3)(ii)(J) and (M) were published in the *Federal Register* on February 26, 1999 (64 FR 9884–88), and a 60-day comment period that ended on April 27, 1999, was provided. A Notice of Availability for NUREG-1437, Vol. 1, Addendum 1 appeared in the same issue of the *Federal Register* (64 FR 9889) and included a solicitation for public comments through April 27, 1999.

Thirty-one comment letters were received on the proposed rule from power reactor licensees, State and local Government agencies, the nuclear power industry and its legal affiliations, a public interest group, and an individual. Most of the comments were from the State of Nevada, Clark and Nye Counties, Nevada, and local government entities in Nevada. These comments focused on the NRC not involving Nevada in scoping and designing the study in Addendum 1 and on perceived deficiencies in the scope and thoroughness of the analysis in the Addendum. The State of Utah also submitted extensive comments that focused on concerns with the scope and thoroughness of the supporting analysis in Addendum 1, including the lack of consideration of the proposed Private Fuel Storage Facility at Skull Valley, Utah. Industry comments focused on clarifications in the rule language.

Written comments were received from the following agencies, organizations, and individuals:

- Baltimore Gas and Electric Company
- The Honorable Richard H. Bryan, United States Senator
- Carolina Power & Light Company
- Chattooga River Watershed Coalition (Nicole Hayler)
- Clark County, Nevada, Department of Comprehensive Planning, Nuclear Waste Division (two submissions)
- Eureka County, Nevada, Yucca Mountain Information Office
- Alice Fessenden, City Council member, City of Mesquite, Nevada
- Florida Power and Light Company
- Jan Laverty Jones, Mayor, City of Las Vegas
- Mineral County, Nevada, Nuclear Projects Office
- Nuclear Energy Institute
- Nye County, Nevada, Department of Natural Resources and Federal Facilities
- Part 51 Utility Group (consists of Commonwealth Edison Company, Duke Energy Corporation, and Southern Nuclear Operating Company). Comments submitted by Winston & Strawn, counsel to the Part 51 Utility Group
- PECO Nuclear (A Unit of PECO Energy)

- Jon C. Porter, Nevada State Senator
- Kristin Shrader-Frechette, Professor, University of Notre Dame
- Southern Company (Southern Nuclear Operating Company, Inc.)
- State of Florida, Department of Community Affairs, (cover letter and six comment forms from reviews coordinated by the Florida State Clearinghouse)
- State of Nevada, Agency for Nuclear Projects (two submissions)
- State of Nevada, Department of Transportation. Submitted by the Nevada State Clearinghouse
- State of Nevada, Division of Water Resources. Submitted by the Nevada State Clearinghouse
- State of Utah (2 submissions). Comments submitted on behalf of the State by Harmon, Curran, Spielberg and Eisenberg, LLP
- Tennessee Valley Authority
- TU Electric
- Virginia Power
- White Pine County, Nevada, Nuclear Waste Project Office (2 submissions)
- Abigail Johnson, Yucca Mountain Information Office

RESPONSES TO COMMENTS

The written comments have been summarized and grouped into issue categories. As a result of the NRC staff's review of all written comments, some modifications and clarifications have been incorporated into Addendum 1—notably, the use of more conservative assumptions in the analyses and a fuller explanation of those analyses. In addition, the rule language has been edited for clarification. The NRC staff has also prepared responses, given below, to the issues raised by the commentors.

Issue 1—Public Notice

Comment: The titles of the notices published in the *Federal Register* were inaccurate and misleading because they do not clearly indicate the subject matter of the proposed rule and Addendum 1 that addresses transportation of spent nuclear fuel.

Response: The NRC believes that the titles properly reflect the regulatory action being taken. As required by NRC regulations,[17] a notice of the proposed rule and a Notice of Availability of Addendum 1 were published in the *Federal Register* (64 FR 9884 and 64 FR 9889, February 26, 1999). While the notice's title did not include the specific term "transportation" the titles define the subject matter of the regulation to be affected; the title of the proposed rule is "Changes to Requirements for Environmental Review for Renewal of Nuclear Power Plant Operating Licenses." The title of the Notice of Availability is "Changes to Requirements for Environmental Review for Renewal of Nuclear Power Plant Operating Licenses, Availability of Supplemental Environmental Impact Statement." Addendum 1 supplements specific sections of NUREG-1437, *Generic Environmental Impact Statement for License Renewal of Nuclear Plants* (May 1996). This limited function is indicated by the title of Addendum 1, *Generic Environmental Impact Statement for License Renewal of Nuclear*

[17] 10 CFR 2.804, "Notice of proposed rulemaking" and 10 CFR 51.117, "Draft environmental impact statement–notice of availability."

Plants: Main Report Section 6.3—`Transportation,' Table 9.1 `Summary of findings on NEPA issues for license renewal of nuclear power plants,' Draft Report for Comment.

The rule change and the supporting Addendum 1 affect only the plant-specific environmental analysis required to be submitted in the Environmental Report of an applicant for the renewal of a nuclear power plant operating license and the plant-specific supplemental environmental impact statement prepared by the NRC. Even though the analysis in Addendum 1 focuses on spent-fuel shipments converging on the proposed repository at Yucca Mountain, Nevada, that analysis and the resulting rule affect only the review requirements for renewal of an individual nuclear power plant operating license. It is not intended that Addendum 1 or the revised rule support any other regulatory decision by the NRC.

Issue 2—Communications

Comment: NRC failed to consult with Nevada State agencies, Nevada local governments, and with Nevada Indian Tribes.

Response: As discussed above, a variety of organizations and government agencies submitted substantive comments in response to the proposed rule. The NRC has considered these comments and, in many cases, altered its analysis as a result of this input. Prior to issuance of the proposed rule for comment, however, the NRC did not seek any pre-publication input from Nevada state agencies, Nevada local Governments, and Nevada Indian Tribes for the following reasons. First, the rule involves a narrow aspect of the environmental review of individual nuclear power plant license renewal decisions, which is a regulatory decision completely separate from the regulatory requirements that will guide the NRC licensing review of a HLW repository and from the decision process leading to a DOE site recommendation on Yucca Mountain, Nevada, the site DOE currently has under study. This rule amends the December 18, 1996, rule with respect to two questions not adequately answered:

1. Are the current environmental impact values in Table S-4, based on several destinations, still reasonable to incorporate in a license renewal review that assumes a single destination for spent fuel at Yucca Mountain, Nevada?

2. Are the current environmental impact values in Table S-4 (which are based on fuel enriched to no greater than 4 percent, the average level of irradiation of spent fuel not exceeding 33,000 MWd/MTU, and shipment no less than 90 days after discharge from the reactor) still reasonable to incorporate in a license renewal review of plants that may use fuel enriched up to 5 percent and potentially ship spent fuel with a burnup of up to 62,000 MWd/MTU?

The amendment has no direct regulatory impact on any entity within Nevada. The selection of Yucca Mountain for the generic evaluation of transportation impacts was made because that site is currently the only one under consideration for a high-level-waste (HLW) repository. Before HLW is actually transported to Yucca Mountain, Nevada, the State, local Governments, Indian Tribes, and the public have the opportunity to provide input on site-specific transportation impacts by commenting on DOE's draft EIS for the proposed repository at the Yucca Mountain site, which was made available for a 180-day comment period beginning on August 13, 1999 (http://www.ymp.gov).

Also, the need for and scope of the current rule amendment were identified within the context of a preceding rulemaking that specified the plant-specific content of the environmental review of applications for the renewal of individual nuclear power plant operating licenses. The previous final rule was published in the *Federal Register* first on June 5, 1996 (61 FR 28467), and again with minor modifications on December 18, 1996 (61 FR 66537). The Commission stated in the December *Federal Register* notice, "as part of its efforts to develop regulatory guidance for this rule, the Commission will consider whether further changes to the rule are desirable to generically address: (1) The issue of cumulative transportation impacts and (2) the implications that the use of higher burn-up fuel have for the conclusions in Table S-4. After consideration of these issues, the Commission will determine whether the issue of transportation impacts should be changed to Category 1."

Issue 3—Transportation Analysis

Comment: NRC failed to consult relevant Yucca Mountain transportation risk and impact studies.

Response: The publications cited by commentors have been reviewed for information that may be of direct use within the limited focus and purpose of the current rule. Most of the information in these documents was found to be potentially more relevant to a detailed site-specific review of Yucca Mountain than to the generic analysis for this rule. That information has been brought to the attention of those organizational units within the NRC responsible for activities relating to DOE's study on the Yucca Mountain site so they can appropriately consider the information in any future prelicensing activities involving Yucca Mountain. Specific to the current rule, the demographic data used as inputs to the RADTRAN computer code, which was used to generate the impact analysis in Addendum 1 were more current than data used in many of the studies cited by the commentors.

Comment: NRC failed to consult the full spectrum of transportation mode and route scenarios.

Response: The purpose of this rule and associated analysis is to reach conclusions regarding the likely environmental impact of license renewal. As noted above, this amendment is an addition to generic assessments of license renewal environmental impacts already codified in the Commission's regulations at 10 CFR Part 51, Subpart A, Appendix B. It is not an environmental impact statement for a repository at Yucca Mountain for which DOE is responsible and, as such, does not delve into the expansive range of different transportation modes and route scenarios that would be considered in the context of a decision on Yucca Mountain as the possible site for the facility itself. Instead, the NRC has sought to determine a conservative estimate of the likely impacts from transporting fuel and waste generated, during the license renewal term, in the vicinity of a potential repository. In doing so, the NRC considered only those transportation modes and route scenarios that would likely result in the greatest impacts. For the proposed rule, the NRC staff—in consultation with the DOE staff—determined that truck shipments through densely populated areas of Clark County, Nevada, would have the highest potential impacts among the alternative transportation scenarios and modes that would receive serious consideration in decisions relating to the suitability of the site undergoing study for a repository at Yucca Mountain. The NRC continues to believe that using these route scenarios and modes to generate conservative estimates is reasonable for the purpose of this rulemaking.

Comment: There was insufficient consideration of routine transportation radiological risks due to use of an average dose rate lower than the regulatory limit.

Response: The RADTRAN analysis reported in the final Addendum 1 has been modified to use the most conservative assumption that the radiation levels for all shipments are at the regulatory limit of 0.1 mSv/hour [10 mrem/hour] at 2 m [6.6 ft] from the shipment vehicle surface. As noted in Section 2.2.3 of Addendum 1, this assumption is sufficiently conservative to bound the analysis of routine transportation radiological risk and allow a reasonable assessment of that risk. Actual average radiation levels and associated doses would be much lower because shipments must be designed so that the regulatory limits are not exceeded. The use of the regulatory limits in the revised analysis results in higher dose estimates for incident-free transportation. However, these revised estimates are still small as defined in 10 CFR Part 51, Subpart A, Appendix B. Consequently, the conclusion regarding the radiological risks of routine transportation remains valid.

Comment: There was insufficient consideration of routine transportation radiological risks to members of the public residing, working, or institutionally confined at locations near shipping routes.

Response: The analysis encompasses members of the public residing, working, or institutionally confined at locations near shipping routes by assuming that the resident population along the transportation routes is exposed to every shipment. The text of Sect. 2.3 of Addendum 1, has been revised to state this assumption and its effects on the revised analysis more clearly. In addition, more conservative assumptions of truck speed have been used in the revised RADTRAN analysis conservatively thus extending the exposure time to individuals along the transportation route. These assumptions further ensure that members of the public cited by the commentors would be encompassed by the dose and risk assessments. As expected, the use of these more conservative assumptions leads to higher estimates of radiation dose to the public. However, these revised dose estimates remain well below regulatory limits for members of the public and small compared to natural background and other sources of radiation exposure.

Several commentors indicated that Addendum 1 should focus on unique and location-specific circumstances of the transportation routes and population centers. However, the analysis in Addendum 1 is generic and was designed to support only the limited scope of the decision regarding this rule change. The NRC believes that the routes chosen represent a conservative analysis due to the higher number of people who live along these routes. Because the purpose of this rule is to provide a generic analysis for the limited purpose of determining the likely impact of transportation during the license renewal term, the large analytical effort required for the identification of specific population locations and traffic circumstances is not warranted within the context of the current rule. Although the comments raise valid issues, those concerns should be resolved within the context of studying, and making decisions concerning, the suitability of the candidate repository site at Yucca Mountain and regulatory requirements governing transportation of spent fuel.

Comment: There was insufficient consideration of radiological risks resulting from traffic gridlock incidents.

Response: Traffic gridlock incidents are not specifically analyzed in NUREG-1437 because of the limited scope and generic nature of the analysis (see response to comment on consideration of risks to members of the public, above). However, the revised RADTRAN

analysis includes approximately two hours of stationary time in Clark County (during a 100 to 140 mile trip depending upon the route) for each truck shipment; and traffic gridlock could be one of the reasons for the truck being stationary.

To a limited extent, the incorporation of more conservative assumptions of truck speed into the revised RADTRAN analysis compensates for an analysis of traffic gridlock by allowing for increased exposure time at any given point during transport. As noted earlier, these revised assumptions lead to higher but still small dose estimates. In addition, the routes used in the analysis in Addendum 1 were deliberately chosen to maximize estimated dose. Actual routes would be less likely to have significant areas where traffic gridlock occurs. The selection of the actual routes, for example, would comply with the U.S. Department of Transportation's Federal Highway Administration regulations (49 CFR Part 397, Subpart D) that require minimizing the time in transit (i.e., avoiding periods of great traffic congestion) for routing radioactive shipments.

Comment: There was insufficient consideration of routine transportation radiological risks to vehicle inspectors and escorts.

Response: The RADTRAN analysis in the revised Addendum 1 conservatively uses the regulatory dose rate limit of .02 mSv/hour (2 mrem/hour) for the vehicle crew. In addition, a discussion of potential doses to escorts has been included in Addendum 1, Section 2.2.3. In the analysis, both the escorts and drivers are assumed to be exposed to the regulatory limit, although the dose to the escorts would realistically be less than that to the drivers. Even with these more conservative assumptions, the estimated dose and risk to the crew are small and below regulatory limits.

The risk to vehicle inspectors would be encompassed by the addition of stationary time for the transport truck in Clark County (see response to comment about traffic gridlock, above). Again, the estimated dose and risk are increased by the use of more conservative assumptions; but they remain small and below regulatory limits.

Comment: There was insufficient consideration of severe transportation accident risks.

Response: The Commission has evaluated the potential radiological hazards of severe transportation accidents involving truck and rail spent nuclear fuel (SNF) shipments (NUREG/CR-4829, " Shipping Container Response to Severe Highway and Railway Accident Conditions" February 1987, commonly referred to as the modal study). The modal study evaluated SNF shipping casks certified to NRC standards against thermal and mechanical forces generated in actual truck and rail accidents. This evaluation included an assessment of cask performance for a number of severe transportation accidents, including the Caldecott Tunnel fire. The modal study concluded that there would be no release in 994 of 1,000 real accidents, and that a substantially lower fraction of accidents could result in any significant release. These results when combined with the probability of a severe accident involving a shipment of SNF, demonstrate that the overall risk associated with severe accidents of SNF shipping casks is very low. The results of the modal study were factored into the analysis for this rulemaking, as an input to the RADTRAN computer code. Additional analyses were performed to address the possible impacts of accidents involving higher burnup fuel.

The consequences associated with an individual SNF shipment have an upper bound, based on the amount of material in the package, the availability of mechanisms to disperse

the radioactive contents, the locations and number of receptors, and post-event intervention than would occur. Further, this upper bound in transit might reasonably be expected to be less than that at the origin or destination points (where more SNF would be stored), and some events themselves might be expected to have greater consequences than the damage they cause to the SNF cask. The NRC recognizes that there are some conceivable events (not necessarily traditional 'transportation accidents'), that might be hypothesized to occur to a SNF cask while in transport. Even though these events have an extremely low probability of occurring, they might result in high consequences if they were to occur. The NRC considers these events to be remote and speculative and thus, does not call for detailed consideration. Because the NRC traditionally considers risk to be the product of the probability of an event and its resultant consequences, events with such low probability of occurring have a negligible contribution to the overall risk. In addition, as the probabilities of the events become very low, the value of insights to be gained, for use in regulatory decisions, is not apparent.

Comment: The study underestimates Clark County's residential population and growth rate. In addition, the study does not account for the large nonresident population, resulting in underestimates of risk and impacts.

Response: In keeping with the generic nature and limited intent of the analysis, the original analysis used best available data and best estimates of existing population and population growth rates. In response to commentors' concerns and to reflect the potentially large population growth rate of Clark County, the NRC staff has incorporated higher population estimates into the analysis to provide conservative (higher than best estimate) assessments of potential impacts. However, as indicated by the comment, the task of estimating the impacts on the area population is more complex than assuming a population growth rate. Both the rate of growth of the population and changes in location of the population within the county are important. As stated in Addendum 1, populations within a half mile of the transportation route are the most affected by the transportation activities. Therefore, in order to ensure that the size of the affected population is conservative, the NRC staff's analysis not only increases over time the existing population densities along the assumed transportation routes, but also forecasts increased residential, business, and transient/tourist populations in the areas of likely development.

Issue 4—Cumulative Impacts

Comment: NRC failed to consider cumulative impacts of all spent fuel, HLW, and low-level-waste shipments.

Response: Table S-4 shows the environmental impacts of transportation of fuel and waste directly attributable to one nuclear power plant. The current rulemaking was narrowly focused on the question of whether the impact values given in Table S-4 would be different with spent fuel shipments converging on one destination, Yucca Mountain -- the candidate site under study by DOE for a repository, rather than several destinations. Table S-4 does not consider non-commercial power reactor shipments of fuel and waste. Nevertheless, a discussion of the cumulative impacts of transporting spent fuel, HLW, and low-level waste through southern Nevada has been added to Addendum 1 (Section 2.4). To estimate the potential cumulative effects of DOE shipments of LLW to the Nevada Test Site as well as shipments of HLW to a possible repository, the NRC staff used information published in DOE's Waste Management Programmatic EIS (DOE/EIS-0200-F) May 1997. To ensure that

cumulative impacts are not underestimated, the NRC staff selected alternatives in the EIS that led to the highest numbers of shipments to the Nevada Test Site and Yucca Mountain. The results of the analysis indicate that the cumulative doses and expected cancer fatalities resulting from the civilian SNF and the DOE shipments are small compared to the risk of cancer from other causes.

Comment: Commentors stated that cumulative impacts along the Wasatch Front must be considered.

Response: The State of Utah maintains that a study similar to the one conducted for Las Vegas and Clark County must be conducted for the cumulative impacts along the Wasatch Front that would originate from the proposed Private Fuel Storage Facility to be located at Skull Valley, Utah. Such an analysis is beyond the scope of this generic rulemaking because the Commission directed that cumulative impacts attributed to transportation be analyzed only in the vicinity of Yucca Mountain. However, the NRC is currently reviewing a site-specific application for construction and operation of the proposed Private Fuel Storage Facility at Skull Valley in a separate regulatory action. A site-specific study of the cumulative impacts of transportation is part of that review. The study will be reported in a draft Environmental Impact Statement to be published for public comment. Its availability will be noticed in the *Federal Register.*

Issue 5—Legal Requirements

Comment: NRC failed to conduct a legally sufficient risk assessment. Use of a model such as RADTRAN is not in and of itself sufficient to meet the requirements of the National Environmental Policy Act. The NRC must consider consequences of low-probability, high-consequence accidents not included in RADTRAN, including unique local conditions, unforeseen events, sabotage, and human error in cask design. The NRC should adopt the comprehensive risk assessment approach for SNF and HLW transportation described in Golding and White, *Guidelines on the Scope, Content, and Use of Comprehensive Risk Assessment in the Management of High-Level Nuclear Waste Transportation* (1990).

Response: See the response above regarding consideration of severe accident risk (low probability, high consequence accidents) during transportation.

The NRC's regulatory program will continue to ensure that the risk of severe transportation accidents are minimized. Physical security for spent fuel transportation is regulated under 10 CFR 73.37. The regulatory philosophy is designed to reduce the threat potential to shipments and to facilitate response to incidents and recovery of packages that might be diverted in transit. Although the analysis supporting the current rule does not account for the potential for human error, activities related to the design, fabrication, maintenance, and use of transportation packages are conducted under an NRC-approved Quality Assurance Program. This helps to provide consistency in performance and helps reduce the incidence of human error. While a location-specific transportation risk assessment is included in the DOE EIS for the decisions relating to a possible Yucca Mountain repository, the NRC staff believes that the analysis conducted for this rulemaking provides an adequate consideration of the impacts from license renewal. Further, through its regulatory, licensing, and certification functions, the NRC has tried to ensure that transportation of SNF is performed safely with minimum risk to the public, and that vehicle crashes while transporting SNF do not result in severe accidents. Similarly, DOE is expected to ensure that the routes and procedures chosen for SNF transport to the repository provide

ample protection of the public health and safety and the NRC reviews and approves the selected routes.

The analysis in Addendum 1 shows that even with conservative assumptions, the cumulative radiological and non-radiological accident risks of SNF transport in Clark County are small. However, there are a number of opportunities to further reduce human health impacts. These include transporting SNF by rail rather than by truck. This would reduce human health effects by reducing the number of shipments and the likelihood of accidents. In addition, shipping SNF via the proposed beltway would reduce health impacts compared to shipping via the current interstate highway system. The implementation of such mitigative measures must await future decisions that fall well outside of the scope of this rulemaking. In addition, for the purposes of individual license renewal rule decisions, no plant specific mitigation measures were found appropriate for addresses the impacts identified in the Addendum. The NRC staff notes that DOE addresses transportation impacts, mitigation measures, and alternative transportation modes in its EIS for the proposed repository at Yucca Mountain.

Issue 6—Socioeconomics

Comment: NRC failed to consider socioeconomic impacts .

Response: Several commentors raised an issue of public perception of risk of waste shipments and its effect on tourism and property values. Under the National Environmental Policy Act (NEPA), the NRC is obligated to consider the effects on the physical environment that could result from the proposed action. Effects that are not directly related to the physical environment must have a reasonably close causal relationship to a change in the physical environment. The Supreme Court ruling in Metropolitan Edison Co. v. People Against Nuclear Energy, 460 U.S. 766 (1983) has narrowly circumscribed, if not entirely eliminated, an agency's NEPA obligation to consider impacts arising solely from the public's perception that an agency's action has created risks of accidents. Accordingly, it is not necessary to consider the impacts on tourism and property values from the public's perception of risk.

The socioeconomic impacts of plant refurbishment and continued operation during the renewal period are discussed in the plant-specific supplement to the GEIS for each individual license renewal applicant. The NRC recognizes that there will likely be increased costs in the unlikely event of an accident. However, for the majority of transportation accidents that may occur, the associated costs are small. For the most severe accidents analyzed by the RADTRAN computer code, the costs could be substantial. Given the low probability of such accidents, the socioeconomic impacts of transportation of SNF do not alter the Commission's conclusions regarding the impacts of this issue.

Issue 7—Higher Burnup Fuel

Comment: There was insufficient consideration of extended fuel burnup issues.

Response: Section 3 of Addendum 1 addresses the issues associated with extended fuel burnup in detail. The NRC staff's analysis of higher burnup fuel examined the issues of radiation doses due to higher dose rates during shipment, higher radiation doses in the event of transportation accidents, and the potential for a criticality in the very unlikely event that high burnup fuel geometry is altered during a transportation accident.

The analysis done by the NRC staff concluded that higher burnup fuel would likely cause higher dose rates during transportation and that dose rates following transportation accidents with radiological releases would also increase, all other things being equal. However, despite the increased dose rates the potential impacts on the transport crews and the affected members of the public would still be acceptably small. The analysis of the potential for criticality following a change in fuel geometry as the result of a transportation accident determined that such an event was not a concern.

Issue 8—Environmental Justice

Comment: NRC failed to consider Environmental Justice.

Response: The analysis suggests that the routes through downtown Las Vegas, Nevada may run through areas containing a higher proportion of low-income and minority groups than the beltway routes. However, as discussed in Sections 2.3 and 2.4 Addendum, the radiological and nonradiological impacts of transportation of SNF are small. In addition, these small impacts are dispersed throughout the entire routes and do not appear to fall disproportionately in any one area. Based on the analysis performed the NRC staff concludes the overall impacts of transportation of SNF will not likely be disproportionately high or adverse for any minority or low-income population.

Issue 9—Regulatory Text

Comment: Several suggestions for clarifying the regulatory text were offered.

Response: The rule has been revised to make it clear that the environmental impact values in Table S-4 (10 CFR 51.52) may be used to account for the environmental effects of transportation of fuel and waste to and from a nuclear power plant at repository such as Yucca Mountain, Nevada, which is under consideration as a HLW repository. If, in the future, Yucca Mountain is removed from consideration as a HLW repository, the Commission will evaluate whether the generic analysis performed for the current rule is applicable to other sites that are considered. If fuel enrichment greater than 5 percent Uranium-235 and fuel burnup of greater than 62,000 MWd/MTU are approved by the Commission, the Commission will consider a rulemaking to assess the continuing generic applicability of Table S-4 to environmental reviews for license renewal.

Comment: The addition to the rule of local transportation impacts associated with continued operation of a plant during the license renewal period needs further clarification in the rule language and in the Supplementary Information.

Response: The rule was revised to clarify that the issue of “Public services, Transportation” in Table B-1 of Appendix B to Subpart A of 10 CFR Part 51 involves the contribution of highway traffic directly attributable to refurbishment and continued operation of a plant during the license renewal period to changes in the service levels of highways in the vicinity of the plant. The majority of traffic directly attributable to a plant is commuting plant workers.

Comment: Paragraph (M) of 10 CFR 51.53(c)(3)(ii) should be deleted.

Response: The rule language has been amended and Paragraph (M) has been deleted. This change from the proposed rule was necessary in order to provide consistency with 51.53(c)(3)(ii), as this section only deals with Category 2 issues. Since the cumulative impacts of transportation of SNF in the vicinity of Yucca Mountain is no longer a Category 2 issue, inclusion in 51.53(c)(3)(ii) is no longer necessary.

Other Comments

This section addresses the comments that are not encompassed by the issue summaries and responses given above. In addition, some comments were received after the close of the comment period. These comments were reviewed, and most were found to be similar to comments already addressed by the issue summaries and responses. However, the comments that raised new ideas relevant to Addendum 1 are also presented in this section. For these late comments, revisions to Addendum 1 were necessarily minimal.

Comment: Addendum 1 assumes that truck transport would have the highest doses. This assumption is not necessarily valid. Also, a different route that avoids Las Vegas should be addressed. (A route through Nellis Air Force Base and down US-95 is being considered by DOE and it has been shown to have higher risks of accident fatalities and to increase the radiological risk.) Routes chosen in Addendum 1 do not bound the analysis properly.

Response: The transportation and route scenarios and their underlying assumptions were designed to reflect situations that most likely would result in highest doses in order to bound the analysis properly as the routes chosen for this analysis were the most populated routes in the state of Nevada. Also, as noted in an earlier response, the NRC staff consulted DOE in determining that truck shipments through densely populated areas of Clark County, Nevada, would have the highest potential impacts among the alternative transportation scenarios that would be given serious consideration in decisions relating to the suitability of the site undergoing study for a repository at Yucca Mountain.

The comment that a route from Nellis Air Force Base down US-95 is higher risk than those selected by the NRC staff provided no specific details concerning that assertion. In the NRC staff's view, any route that bypasses major centers of population will have significantly lower radiological impacts. With regard to traffic accident rates, while it may be true that certain routes will have accident rates that are higher than average, the average rates are low enough that modest increases from the average will not significantly change the staff's conclusions.

Comment: SNF from California would go through Las Vegas twice (in route to Skull Valley and subsequently to Yucca Mountain), resulting in increased risk.

Response: If the proposed SNF storage facility is licensed and built, some SNF may go through Clark County on the way to Skull Valley, Utah. The NRC staff has not analyzed this possible impact because it is not clear at this time that the proposed Skull Valley facility will be licensed or that the SNF would go through Las Vegas if the facility were built. In addition, SNF from California makes up only a small fraction of the SNF that would be shipped. The NRC staff concludes that the conservative assumptions used in the analysis more than compensate for minor changes in transportation plans that may develop for that fraction of the total SNF.

Comment: The NRC should provide affected parties with some statement of the regulatory effect of the interrelationships between the numerous other similar analyses.

Response: As a general matter, the National Environmental Policy Act (NEPA) requires all Federal agencies to perform an environmental review for certain actions they propose to conduct. In the context of nuclear waste management, several agencies have regulatory and operational responsibilities which may involve various proposed actions that, in turn, require the preparation of environmental impact statements (EISs). Inevitably, there may be a degree of overlap in the types of impacts discussed in these various EISs. However, the analysis developed by the NRC for the purposes of license renewal is not binding on future actions and associated environmental impact analyses.

The NRC proposed action that has triggered the preparation of this rulemaking and the associated analysis of environmental impact is the agency's responsibility to review applications for the renewal of nuclear power plant licenses. In light of the discrete purpose of this rulemaking, the NRC has sought to gauge the impacts of license renewal given the information currently available on those impacts including the transportation of spent fuel. Even though these impacts do not occur at the plant site during license renewal, the NRC has considered them here pursuant to its NEPA responsibilities.

Future EISs prepared by other agencies on proposed actions in the waste management arena (e.g., any recommendation by DOE on approval of the Yucca Mountain site for development of a repository) will undoubtedly address some of the same impacts covered by the analysis described in this notice. Some of these other impact statements are anticipated to be more detailed given their purpose and the availability of additional information in the future. This, however, does not diminish the adequacy of the NRC’s action. This analysis is sufficient for the purpose it serves and it provides the Commission with the information needed to weigh the likely environmental impacts of SNF transportation for individual license renewals applications and reach informed decisions regarding the acceptability of these applications. The rule does not, however, dictate any particular result for future actions taken with regard to a waste repository or other waste management matters. Specifically, any generic conclusions by the Commission concerning the cumulative environmental impacts of transportation associated with nuclear power plants would in no way affect any DOE decision concerning the suitability of Yucca Mountain or any consideration that DOE may give to transportation impacts in making that decision.

Comment: Addendum 1 is not meaningful to the public. For example, it is impossible to determine if the spent fuel isotope inventory shown in the sample pages of the RADTRAN printout matches the fuel considered in the Addendum.

Response: In preparing Addendum 1, the NRC staff has attempted to write to a broad and diverse audience as much as possible. The NRC staff acknowledges that this rulemaking involves complicated, technical issues. However, the NRC staff has attempted to present these matters in the most clear manner possible. Addendum 1 has been revised and Table 2 provides the fuel isotope inventory that can be compared to the sample pages of the RADTRAN computer code printout.

Comment: The study area is inaccurately defined and the location of some cities is incorrectly stated.

Response: During the preparation of Addendum 1, the initial study area selected for analysis emphasized the urban areas in and near Las Vegas. Route selections were based in part on their proximity to those areas, not to county borders. However, in response to public comments, the study area was expanded to include the entire county. Consequently, the "entry" point for SNF shipments shifted to cities such as Mesquite.

Comment: Addendum 1 should discuss potential mitigation measures, not rely on the DOE Yucca Mountain EIS for that discussion.

Response: The analysis in Addendum 1 shows that, even with conservative assumptions, the cumulative radiological and non-radiological accident risks of SNF transport in Clark County are small. However, there are a number of opportunities to further reduce human health impacts. These include transporting SNF by rail rather than by truck. This would reduce human health effects by reducing the number of shipments and the likelihood of accidents. In addition, shipping SNF via the proposed beltway would reduce health impacts compared to shipping via the current interstate highway system. The implementation of such mitigative measures must await future decisions that fall well outside of the scope of this rulemaking. In addition, for the purposes of individual license renewal rule decisions, no plant specific mitigation measures were found appropriate for addressing the impacts identified in the Addendum. The NRC staff notes that DOE will addresses transportation impacts, mitigation measures, and alternative transportation modes in its EIS for the proposed action to develop a repository at Yucca Mountain.

Comment: Addendum 1 does not mention that the proposed repository which is the destination for shipments of spent nuclear fuel is in Nye County.

Response: A statement noting that the proposed Yucca Mountain repository is in Nye County has been added to Addendum 1.

Comment: No statements of baseline conditions are given in Addendum 1.

Response: Addendum 1 uses background and natural radiation levels as the baseline conditions against which dose estimates can be compared. Both are presented in Addendum 1 and are based in large part on information published by the National Council on Radiation Protection and Measurements.

Comment: The analysis in Addendum 1 is limited to human health effects. Other potential impacts should be considered.

Response: Addendum 1 was prepared to provide information regarding a proposed rule to determine whether the transportation of higher enriched, higher burnup fuel to a single destination is consistent with the values of Table S-4. Because the pertinent section of Table S-4 concerns impact values for human health effects, Addendum 1 concentrates on potential cumulative impacts to human health. However, Section 2.3 of Addendum 1 has been revised to look at the potentially most significant non-human health effect which is the potential increase in traffic volume in Clark County as the result of the transportation of SNF. The NRC staff conclusion is that the impacts are small.

Comment: The analysis assumes the use of the large-capacity GA-4/9 truck cask, which has not been certified and must be used in combination with specially designed trucks that

have not been tested. It also assumes that these cask and truck systems will be available in sufficient quantity for the shipments. The commentor seeks assurance that the assumed truck cask system is feasible and that DOE's proposed regional service contractor approach would feasiblely result in the use of such a system for all shipments in the potential truck shipment campaign.

Response: The analysis done by the NRC staff assumes that an adequate number of certified casks would be available. Addendum 1 used extremely conservative assumptions regarding SNF shipments and casks to ensure that the analysis would lead to maximum dose estimates. For example, the analysis of incident-free transportation impacts assumes the use of legal-weight trucks for shipment of the SNF, which results in more and smaller shipments. For the accident analysis, the use of the largest-capacity casks was assumed in order to maximize the amount of SNF that would be involved in the accident. These parameters were intended to bound the parts of the analysis, not to describe parts of the actual SNF shipment protocol such as the specific casks that will be used.

Comment: The analysis appears to assume that oldest spent nuclear fuel would be shipped first to the repository. If so, how will institutional measures achieve this sequencing? If they do not, how will the maximum potential radioactive risk in shipment and storage or disposal be addressed?

Response: The spent fuel will be shipped in casks certified by the NRC. In fact, the current practice of NRC issuing certificates of compliance for casks used for shipment of power reactor fuel is to specify 5 years as the minimum cooling period in a certificate.

Comment: Addendum 1 uses national accident rate statistics. State and/or local rates would be more appropriate.

Response: For the analysis of radiological accidents, data specific to Nevada were used in the RADTRAN computer code runs. However, for the analysis of non-radiological accidents, the NRC staff required data regarding not only accident rates but also injury and fatality statistics. Those data were not available except from the U.S. Department of Transportation.

Comment: Water resource supplies within boundaries of the State of Nevada belong to the public. All waters are subject to appropriation for the beneficial use only under state law.

Response: The water resources of the state will be unaffected by the transport of SNF through Clark County.

Comment: Report failed to provide conditions for informed consent which requires disclosure to those affected, their understanding , and voluntary acceptance.

Response: NRC regulations already contain values that the NRC considers to be acceptable environmental impacts from the shipment of SNF and other radioactive waste. In Addendum 1 the NRC staff is, in part, ensuring that the overall impacts of the transportation of the additional SNF that will be generated as the result of nuclear power plant license renewal are bounded, given the best information the NRC staff has at this time, by those values previously found acceptable. The values specified in the regulations are supported by analysis and were adopted into the regulations only after providing opportunity for public

comment as part of the NRC's rulemaking process. As such, the NRC has followed all applicable legal requirements and appropriately carried out its responsibility to consider the environmental impacts of its license renewal decision.

Comment: The NRC staff uses "flawed" science as evidenced by factors including a questionable definition of risk which fails to account for severe accidents, use of misleading if not false average radiation dose rates, manipulation of dose rate data to obtain acceptable results and lack of empirical data especially that applicable to transportation of SNF.

Response: The decision before the Commission is whether the impacts of license renewal are so severe that they should preclude the option of license renewal. As such, the Commission has considered a reasonable estimate of impacts and not included remote and speculative scenarios that do not add to our regulatory decision (see also response to comment on severe accidents, above).

In the analyses described in Addendum 1 the NRC staff uses dose rates that reflect the applicable regulatory limit rather than average dose rates. Even with these very conservative assumptions for dose rates, transportation modes, transportation routes, and a number of other factors, radiation impacts on the transport crews and the general public were not only found to be within all regulatory limits but small as well and there was no need to adjust the assumptions.

Throughout Addendum 1 the NRC staff discusses the assumptions that were made and where applicable the empirical data used to support those assumptions is referenced. With respect to making judgements about the shipment of spent fuel the NRC staff has the benefit of data from over 40 years of experience in shipping SNF in this country as well as overseas.

Comment: High level waste management and transportation should not be a generic issue and Yucca Mountain should not be used for the study as DOE is behind schedule and it is not an approved site for SNF.

Response: Given that the potential environmental impacts of the transportation of SNF resulting from license renewal are similar for all nuclear power plants who seek to renew their operating licenses, and that the NRC staff's analysis contained in Addendum 1 concludes that the impacts are likely to be small, the Commission feels it is appropriate to reclassify the issue as a Category 1 issue. Use of Yucca Mountain, Nevada for purposes of the staff's analysis, as the destination of the SNF is appropriate as it is the only site presently under study. It must be emphasized that this generic environmental impact statement is required to make use of the best information available and at this time the assumption that Yucca Mountain is the destination is reasonable for purposes of the staff's analysis. If in the future, conditions change, the assumption made for this analysis may need to be reevaluated.

Comment: Need to consider the intermodal option being considered by Congress for Caliente, Nevada.

Response: Rather than speculate on which transportation option or options will ultimately be selected, the NRC staff has chosen a mode and routes to Yucca Mountain which in its judgement will have the greatest potential environmental impacts in order to do a bounding analysis for the purpose of this rulemaking.

Comment: The analysis needs to address the impacts of above ground nuclear weapons testing being done at the Nevada Test Site.

Response: For the purposes of considering the environmental impacts of license renewal, there does not appear to be a relevant connection between transportation impacts from civilian SNF and defense related weapons testing at the Nevada test site.

Comment: The analysis relies on assumptions that are 25-30 years old and that have a number of problems including omission of important radionuclides (Iodine-129, Chlorine-36 and Cobalt-60), unrealistic RADTRAN assumptions including inadequate consideration of severe accidents, outdated assumptions from NUREG-0170 and WASH-1238 including the failure to consider the degradation of cladding during extended dry storage, and failure to consider the rail-heavy haul truck option.

Response: With regard to the radionuclides, as indicated in Table 2 of Addendum 1, Cobalt-60 is considered. While both Iodine-129 and Chlorine-36 are long lived, neither is a significant contributor to overall dose. Iodine-129 has a very low specific activity and Chlorine-36 is a beta emitter.

The issue of the severity of accidents considered in the NRC staff's analysis was addressed in an earlier response to comment. The assumptions that are used in the NRC staff's analysis have been periodically reviewed and found adequate. The hypothetical accident conditions of 10 CFR 71.73 have been evaluated against actual conditions encountered in highway and railway accidents and were found to be bounding as documented in NUREG/CR-4829, February 1987, "Shipping Container Response to Severe Highway and Railway Accident Conditions." As noted in Table 3 of Addendum 1, the version of RADTRAN used is updated to March 1999.

Section 3 of Addendum 1 does consider the possible effect of cladding degradation on criticality in the context of increased burnup. That analysis would be equally applicable to any cladding degradation that might occur during prolonged dry storage of the SNF.

With regard to what is asserted to be inadequate consideration of the potential radiological impacts of the rail-heavy haul truck option, the NRC staff has analyzed the radiological impacts of the truck mode along various routes through and around Las Vegas and concludes that they are the limiting scenarios. The largest doses in the incident-free conditions are now to the public. If the rail-heavy haul transport scenario was adopted, a substantial portion of the public exposure would be avoided, since in this scenario, the slow moving heavy haul truck transport would not move through a major population center.

Comment: NRC must consider potential Indian Tribe claims of authority to regulate shipments across reservation lands.

Response: This analysis is a generic study that assumes certain routes for the purpose of evaluating environmental impacts. Because the purpose of this study is neither to propose nor approve routes, the NRC does not need to consider tribal claims of authority to regulate shipments in the context of this analysis.

Comment: The beltway is a county road, not part of the Federal highway system; it is not clear it can be used for shipments.

Response: The DOT regulations do not require that SNF shipments only use federal highways. Therefore, the NRC assumed that the beltway is a possible route around Las Vegas.

Comment: The NRC should address the implications of higher enrichment, higher burnup fuel for consequences of radiological sabotage, as NRC has done so far for the increase in burnup from 33,000 MWd/MTU to 40,000 MWd/MTU (see 49 FR 23867, Proposed Revisions to 10 CFR 73, Modification of Protection Requirements for Spent Fuel Shipments, 6/8/84).

Response: The NRC has not quantified the likelihood of the occurrence of sabotage in this analysis because the likelihood of an individual attack cannot be determined with any degree of certainty. Nonetheless, the NRC has considered, for the purposes of this environmental impact statement and rulemaking, the environmental consequences of such an event. In the determination of the consequences of such an event, higher burnup is only one factor. Based on the staff's study of higher burnup fuel (NUREG-1437, Vol.1, Addendum 1, Table 2), the consequences of a sabotage event involving such fuel could be larger than those in the studies referenced by the commentor. However, given that the consequences of the studies referenced by the commentor were small, even modest increases due to the effects of higher burnup fuel would not result in unacceptably large consequences. Because burnup is not the only factor that could affect the consequences of a sabotage event, the staff continues to study this area. Should new and significant information result from the further study, actions addressing such information will be considered.

Nevertheless, the extensive security measures required by NRC regulations make sabotage events extremely unlikely. Moreover, the casks required to be used to transport spent fuel are designed to withstand very substantial impacts during transport without loss of containment integrity. The cask designs should serve to further reduce the likelihood of release of radioactive material in the extremely unlikely event of sabotage. In view of the fact that NRC safeguards regulations make sabotage events extremely unlikely, and the fact that the cask designs themselves should make a release of radioactive material unlikely even were sabotage to occur, and based on our judgement that, in the extremely unlikely event that sabotage and releases did occur, the consequences from higher burnup fuel would not be unacceptably large, we have concluded that a more extensive study of higher burnup fuel consequences is not warranted for this environmental impact statement and rulemaking.

On June 22, 1999, the Nevada Attorney General filed a petition with the Commission which requested the NRC to amend regulations governing safeguards for shipments of spent nuclear fuel against sabotage and terrorism and to initiate a comprehensive assessment. In particular, the petition indicated that NRC should factor into its regulations the changing nature of threats posed by domestic terrorists, the increased availability of advanced weaponry and the greater vulnerability of larger shipping casks traveling across the country. If, as a result of reviewing this petition, the NRC reaches conclusions that are inconsistent with the results or assumptions in the present rulemaking, the Commission will need to revisit the analysis presented here.

APPENDIX 2

LISTINGS OF HIGHWAY ROUTES EXAMINED IN THIS STUDY

The following listings of the routes examined for this study have been captured from the HIGHWAY computer routing model developed at Oak Ridge National Laboratory (Joy and Johnson 1983, Johnson et al.1993).

Route 1. From I-15 northeast of Las Vegas through the spaghetti bowl.

```
                                        HIGHWAY  3.4
*****************************************************************************************************

            AZNVI15 LITTOVER            NV       to       MERCURY        S  U95  LOCL NV

*****************************************************************************************************
                      Leaving :  6/17/99 at 11:33 PDT Arriving:  6/17/99 at 13:47 PDT
                      Total Road Time:  2:14          Total Miles:  143.0

            Route Type: C with 2 Driver(s)   Time Bias:   .70  Mile Bias:   .30  Toll Bias:  1.00

            The following constraints are in effect:
               Route avoids links prohibiting truck use
               Route avoids ferry crossings

            Mileage by Highway Sign Type:
                    Interstate:   82.0    U.S.:   61.0  State:     .0   Turnpike:     .0
                        County:     .0   Local:     .0  Other:     .0

            Mileage by Highway Lane Type:
                  Limited Access Multilane:   94.0  Limited Access Single Lane:     .0
                         Multilane Divided:   49.0         Multilane Undivided:     .0
                  Principal Highways:     .0   Through Highways:     .0   Other:     .0

                                                 State Mileage
                                                 -------------
                                                  NV    143.0

              .0             AZNVI15 LITTOVER            NV         .0   0:00   6/17/99 at 11:33
            82.0  I15        LAS VEGAS         I15  I515 NV       82.0   1:08   6/17/99 at 12:41
            61.0  U95        MERCURY        S  U95  LOCL NV      143.0   2:14   6/17/99 at 13:47

          ---------------------------------  MILEAGE WITHIN DENSITY LEVELS  -------------------------------------
                     <0.0      5.0     22.7     59.7      139      326      821     1861     3326     5815
 State    Miles        0     -5.0    -22.7    -59.7     -139     -326     -821    -1861    -3326    -5815    -9996    >9996
 ---------------------------------------------------------------------------------------------------------------------

  NV     143.0     31.6     44.5     27.2      7.3      3.6      4.8      4.8      4.9      5.0      5.6      2.2      1.5
Route
Total    143.0     31.6     44.5     27.2      7.3      3.6      4.8      4.8      4.9      5.0      5.6      2.2      1.5
Percentages
                   22.1     31.1     19.0      5.1      2.5      3.4      3.4      3.4      3.5      3.9      1.5      1.0
Basis: Estimated 2020 population
```

Route 1 (*continued*).

```
RADTRAN Input Data       Rural  Suburban     Urban

Weighted Population
     People/sq. mi.       10.0    1200.4    6557.7
     People/sq. km.        3.9     463.5    2531.9

Distance                                                Total
     Miles               114.2      19.5       9.3     143.0
     Kilometers          183.8      31.4      15.0     230.1
     Percentage           79.9      13.6       6.5

Basis (people/sq. mi.)    <139  139-3326     >3326   Estimated 2020 Population

Note: Due to rounding, the sum of the mileage in the individual
      population categories may not equal the total mileage shown
      on this report.
```

Route 2. From I-15 south of Las Vegas through the spaghetti bowl.

```
                                        HIGHWAY  3.4
*****************************************************************************************************

            CANVI15 NIPTSLOA            NV       to       MERCURY        S  U95  LOCL NV

*****************************************************************************************************
                      Leaving :  6/17/99 at 11:34 PDT Arriving:  6/17/99 at 13:18 PDT
                      Total Road Time:  1:45          Total Miles:  103.0

        Route Type: C with 2 Driver(s)   Time Bias:   .70  Mile Bias:   .30  Toll Bias:  1.00

        The following constraints are in effect:
           Route avoids links prohibiting truck use
           Route avoids ferry crossings

        Mileage by Highway Sign Type:
                Interstate:   42.0    U.S.:   61.0  State:     .0   Turnpike:     .0
                    County:     .0   Local:     .0  Other:     .0

        Mileage by Highway Lane Type:
              Limited Access Multilane:   54.0  Limited Access Single Lane:     .0
                     Multilane Divided:   49.0         Multilane Undivided:     .0
              Principal Highways:     .0   Through Highways:     .0   Other:     .0
```

Route 2. (*continued*).

```
                                                    State Mileage
                                                    -------------
                                                     NV    103.0

                     .0             CANVI15 NIPTSLOA            NV         .0   0:00   6/17/99 at 11:34
                   42.0  I15        LAS VEGAS         I15  I515 NV       42.0   0:38   6/17/99 at 12:12
                   61.0  U95        MERCURY        S  U95  LOCL NV      103.0   1:45   6/17/99 at 13:18

                 ---------------------------------  MILEAGE WITHIN DENSITY LEVELS  -------------------------------------
                           <0.0      5.0     22.7     59.7      139      326      821     1861     3326     5815
  State    Miles        0    -5.0    -22.7    -59.7     -139     -326     -821    -1861    -3326    -5815    -9996    >9996
  ---------------------------------------------------------------------------------------------------------------------------

   NV     103.0     10.8     28.7     21.6      7.1      5.1      6.7      3.1      2.7      3.1      4.9      3.8      5.4
Route
 Total    103.0     10.8     28.7     21.6      7.1      5.1      6.7      3.1      2.7      3.1      4.9      3.8      5.4
 Percentages
                    10.5     27.9     21.0      6.9      5.0      6.5      3.0      2.6      3.0      4.8      3.7      5.2
 Basis: Estimated 2020 Population


                                   RADTRAN Input Data       Rural  Suburban     Urban

                                   Weighted Population
                                        People/sq. mi.       16.0     961.3    8314.6
                                        People/sq. km.        6.2     371.2    3210.3

                                   Distance                                            Total
                                        Miles                73.3      15.6      14.1     103.0
                                        Kilometers          118.0      25.1      22.7     165.8
                                        Percentage           71.2      15.1      13.7

                                   Basis (people/sq. mi.)    <139  139-3326     >3326   Estimated 2020 Population

                                   Note: Due to rounding, the sum of the mileage in the individual
                                         population categories may not equal the total mileage shown
                                         on this report.
```

Route 3. From I-15 northeast of Las Vegas using bypass.

```
                                        HIGHWAY  3.4
*****************************************************************************************************

            AZNVI15 LITTOVER            NV       to       MERCURY        S  U95  LOCL NV

*****************************************************************************************************
                      Leaving :  6/17/99 at 11:33 PDT Arriving:  6/17/99 at 13:38 PDT
                      Total Road Time:  2:06          Total Miles:  136.0

        Route Type: C with 2 Driver(s)   Time Bias:   .70  Mile Bias:   .30  Toll Bias:  1.00

        The following constraints are in effect:
           Route avoids links prohibiting truck use
           Route avoids ferry crossings

        Mileage by Highway Sign Type:
                Interstate:   87.0    U.S.:   49.0  State:     .0   Turnpike:     .0
                    County:     .0   Local:     .0  Other:     .0

        Mileage by Highway Lane Type:
              Limited Access Multilane:   87.0  Limited Access Single Lane:     .0
                     Multilane Divided:   49.0         Multilane Undivided:     .0
              Principal Highways:     .0   Through Highways:     .0   Other:     .0

                                              State Mileage
                                              -------------
                                               NV    136.0
          .0              AZNVI15 LITTOVER            NV         .0   0:00   6/17/99 at 11:33
        74.0  I15         N LAS VEGAS    NE I15  I215 NV       74.0   1:00   6/17/99 at 12:33
        13.0  I215        LAS VEGAS      NW I215 U95  NV       87.0   1:12   6/17/99 at 12:45
        49.0  U95         MERCURY        S  U95  LOCL NV      136.0   2:06   6/17/99 at 13:38

      ---------------------------------  MILEAGE WITHIN DENSITY LEVELS  -------------------------------------
                  <0.0      5.0     22.7     59.7      139      326      821     1861     3326     5815
 State    Miles       0     -5.0    -22.7    -59.7     -139     -326     -821    -1861    -3326    -5815    -9996    >9996
 ---------------------------------------------------------------------------------------------------------------------

  NV     136.0     31.6     44.5     27.2      7.3      3.5      4.3      3.1      3.1      3.8      4.7      1.7      1.2
Route
Total    136.0     31.6     44.5     27.2      7.3      3.5      4.3      3.1      3.1      3.8      4.7      1.7      1.2
Percentages
                   23.2     32.7     20.0      5.4      2.6      3.2      2.3      2.3      2.8      3.5      1.3      0.9
Basis: Estimated 2020 population
```

Route 3. (*continued*).

```
RADTRAN Input Data       Rural  Suburban     Urban

Weighted Population
     People/sq. mi.       10.0    1174.1    6489.6
     People/sq. km.        3.8     453.3    2505.6

Distance                                                Total
     Miles               114.1      14.3       7.6     136.0
     Kilometers          183.6      23.0      12.2     218.9
     Percentage           83.9      10.5       5.6

Basis (people/sq. mi.)    <139  139-3326     >3326   Estimated 2020 population

Note: Due to rounding, the sum of the mileage in the individual population
      categories may not equal the total mileage shown on this report.
```

Route 4. From I-15 south of Las Vegas using bypass.

```
                                        HIGHWAY  3.4
*****************************************************************************************************

            CANVI15 NIPTSLOA            NV       to       MERCURY        S  U95  LOCL NV

*****************************************************************************************************
                     Leaving :  6/17/99 at 11:34 PDT Arriving:  6/17/99 at 13:23 PDT
                     Total Road Time:  1:49          Total Miles:  110.0

        Route Type: C with 2 Driver(s)   Time Bias:   .70  Mile Bias:   .30  Toll Bias:  1.00

        The following constraints are in effect:
           Route avoids links prohibiting truck use
           Route avoids ferry crossings

        Mileage by Highway Sign Type:
                Interstate:   61.0    U.S.:   49.0  State:     .0   Turnpike:     .0
                    County:     .0   Local:     .0  Other:     .0

        Mileage by Highway Lane Type:
              Limited Access Multilane:   61.0  Limited Access Single Lane:     .0
                     Multilane Divided:   49.0         Multilane Undivided:     .0
              Principal Highways:     .0   Through Highways:     .0   Other:     .0
```

Route 4. (*continued*).

```
                                                   State Mileage
                                                   -------------
                                                    NV    110.0
                     .0            CANVI15 NIPTSLOA            NV         .0   0:00   6/17/99 at 11:34
                   34.0  I15       LAS VEGAS      S  I15  I215 NV       34.0   0:31   6/17/99 at 12:05
                   27.0  I215      LAS VEGAS      NW I215 U95  NV       61.0   0:55   6/17/99 at 12:30
                   49.0  U95       MERCURY        S  U95  LOCL NV      110.0   1:49   6/17/99 at 13:23

                 --------------------------------  MILEAGE WITHIN DENSITY LEVELS  -------------------------------------
                           <0.0      5.0     22.7     59.7      139      326      821     1861     3326     5815
  State    Miles        0     -5.0    -22.7    -59.7     -139     -326     -821    -1861    -3326    -5815    -9996    >9996
  ---------------------------------------------------------------------------------------------------------------------------

   NV     110.0     10.8     28.7     21.6      7.1      5.1      6.4      3.2      4.5      6.5     10.0      3.6      2.5
Route
 Total    110.0     10.8     28.7     21.6      7.1      5.1      6.4      3.2      4.5      6.5     10.0      3.6      2.5
 Percentages
                     9.8     26.1     19.6      6.5      4.6      5.8      2.9      4.1      5.9      9.1      3.3      2.3

 Basis: Estimated 2020 Population


                                     RADTRAN Input Data       Rural  Suburban     Urban

                                     Weighted Population
                                          People/sq. mi.       16.0    1272.6    6469.6
                                          People/sq. km.        6.2     491.3    2498.0

                                     Distance                                            Total
                                          Miles                73.3      20.6      16.1     110.0
                                          Kilometers          118.0      33.2      25.9     177.0
                                          Percentage           66.6      18.7      14.6

                                     Basis (people/sq. mi.)    <139  139-3326     >3326   Estimated 2020 Population

                                     Note: Due to rounding, the sum of the mileage in the individual
                                           population categories may not equal the total mileage shown
                                           on this report.
```

APPENDIX 3

SELECTED PAGES FROM THE RADTRAN 4 COMPUTER CODE RUNS

```
                                   ECHO CHECK


&& Edited Mon Jun 21 15:00:18 1999
&& _North_route_via_beltway_with_rx_life_extension_
TITLE RADTRAN 4.0 INPUT
FORM UNIT
DIMEN 31 8 3 10 18
PARM 1 3 2 1 0
PACKAGE
   LABGRP
      SOLID        GAS    VOLATIL
SHIPMENT
   LABISO
       CR51       MN54       FE55       FE59       CO58       CO60
       KR85       SR89       SR90        Y91       ZR95       NB95
      RU103      RU106      SB125     TE125M      TE127     TE127M
      CS134      CS137      CE141      CE144      PM147      EU154
      PU238      PU239      PU240      PU241      AM241      CM242
      CM244
NORMAL
   NMODE=1
       9.000E-01  5.000E-02  5.000E-02  8.849E+01  4.025E+01  2.416E+01
       4.000E+00  3.100E+00  0.000E+00  1.100E-02  1.000E+00  0.000E+00
       0.000E+00  3.000E+01  2.000E+01  0.000E+00  1.000E+02  1.000E+02
       2.000E+00  8.000E-02  5.000E-02  8.500E-01  4.700E+02  7.800E+02
       2.800E+03
ACCIDENT
   SEVFRC
     NPOP=1
       NMODE=1
       4.62E-01  3.02E-01  1.76E-01  4.03E-02  1.18E-02  6.47E-03
       5.71E-04  1.13E-04
     NPOP=2
       NMODE=1
       4.35E-01  2.85E-01  2.21E-01  5.06E-02  6.64E-03  1.74E-03
       6.72E-05  5.93E-06
     NPOP=3
       NMODE=1
       5.83E-01  3.82E-01  2.78E-02  6.36E-03  7.42E-04  1.46E-04
       1.13E-05  9.94E-07
RELEASE
   RFRAC
     GROUP=1
       0.00E+00  6.00E-08  2.00E-07  2.00E-06  2.00E-06  2.00E-06
       2.00E-05  2.00E-05
     GROUP=2
       0.00E+00  9.90E-03  3.30E-02  3.90E-01  3.30E-01  3.30E-01
       6.30E-01  6.30E-01
     GROUP=3
       0.00E+00  6.00E-06  2.00E-05  2.00E-04  2.00E-04  2.00E-04
       2.00E-03  2.00E-03
EOF
ISOTOPES  -1 75278     1.00   13.000   1.00   0.00  VEGAS1
         CR51  7.40E-16     SOLID   2
         MN54  4.80E+01     SOLID   2
         FE55  3.82E+03     SOLID   2
         FE59  3.84E-10     SOLID   2
         CO58  3.67E-04     SOLID   2
         CO60  1.20E+04     SOLID   2
         KR85  1.96E+04       GAS  10
         SR89  1.42E-05     SOLID   2
         SR90  2.20E+05     SOLID   2
          Y91  5.81E-04     SOLID   2
         ZR95  1.78E-04     SOLID   2
         NB95  1.24E-02     SOLID   2
        RU103  2.40E-08   VOLATIL   7
        RU106  4.04E+04   VOLATIL   7
        SB125  5.80E+03     SOLID   2
       TE125M  1.63E+02     SOLID   2
        TE127  2.09E-01     SOLID   2
       TE127M  2.12E-01     SOLID   2
```

```
        CS134  1.09E+05   VOLATIL   7
        CS137  3.21E+05   VOLATIL   7
        CE141  2.71E-11     SOLID   2
        CE144  2.21E+04     SOLID   2
        PM147  9.17E+04     SOLID   2
        EU154  1.77E+04     SOLID   2
        PU238  1.72E+04     SOLID   2
        PU239  7.09E+02     SOLID   2
        PU240  1.32E+03     SOLID   2
        PU241  2.88E+05     SOLID   2
        AM241  3.17E+03     SOLID   2
        CM242  1.14E+02     SOLID   2
        CM244  2.18E+04     SOLID   2
LINK  1 1.84E+02 8.80E+01 3.80E+00 4.70E+02 2.25E-07 R 1
LINK  1 2.30E+01 4.00E+01 4.53E+02 7.80E+02 2.25E-07 S 1
LINK  1 1.22E+01 2.40E+01 2.51E+03 2.80E+03 3.60E-07 U 1
PKGSIZ
         VEGAS1     5.00
EOF
```

INCIDENT-FREE SUMMARY
******** **** *******

INCIDENT-FREE POPULATION EXPOSURE IN PERSON-REM

	PASSENGR	CREW	HANDLERS	OFF LINK	ON LINK	STOPS	STORAGE	TOTALS
LINK 1	0.00E+00	1.27E+03	0.00E+00	1.74E+00	1.13E+02	1.60E+03	0.00E+00	2.99E+03
LINK 2	0.00E+00	3.49E+02	0.00E+00	4.97E+01	1.19E+02	7.91E+02	0.00E+00	1.31E+03
LINK 3	0.00E+00	3.09E+02	0.00E+00	5.04E+00	6.68E+02	7.91E+02	0.00E+00	1.77E+03
RURAL	0.00E+00	1.27E+03	0.00E+00	1.74E+00	1.13E+02	1.60E+03	0.00E+00	2.99E+03
SUBURB	0.00E+00	3.49E+02	0.00E+00	4.97E+01	1.19E+02	7.91E+02	0.00E+00	1.31E+03
URBAN	0.00E+00	3.09E+02	0.00E+00	5.04E+00	6.68E+02	7.91E+02	0.00E+00	1.77E+03
TOTALS:	0.00E+00	1.93E+03	0.00E+00	5.65E+01	9.00E+02	3.18E+03	0.00E+00	6.07E+03

MAXIMUM INDIVIDUAL IN-TRANSIT DOSE

LINK 1 4.03E-02 REM
LINK 2 4.03E-02 REM
LINK 3 4.03E-02 REM

EXPECTED VALUES OF POPULATION RISK IN PERSON-REM

	GROUND	INHALED	RESUSPD	CLOUDSH	*INGESTION	TOTAL
LINK 1	1.56E+01	2.37E-01	6.68E-01	7.41E-04	0.00E+00	1.65E+01
LINK 2	2.35E+02	3.46E+00	9.78E+00	1.12E-02	0.00E+00	2.49E+02
LINK 3	1.83E+02	2.35E+00	6.65E+00	7.46E-03	0.00E+00	1.92E+02
RURAL	1.56E+01	2.37E-01	6.68E-01	7.41E-04	0.00E+00	1.65E+01
SUBURB	2.35E+02	3.46E+00	9.78E+00	1.12E-02	0.00E+00	2.49E+02
URBAN	1.83E+02	2.35E+00	6.65E+00	7.46E-03	0.00E+00	1.92E+02
TOTALS:	4.34E+02	6.05E+00	1.71E+01	1.94E-02	0.00E+00	4.57E+02

* NOTE THAT INGESTION RISK IS A SOCIETAL RISK;
THE USER MAY WISH TO TREAT THIS VALUE SEPARATELY.

```
                                   ECHO CHECK


&& Edited Mon Jun 21 15:19:54 1999
&& _North_route_via_beltway_without_rx_life_extension_
TITLE RADTRAN 4.0 INPUT
FORM UNIT
DIMEN 31 8 3 10 18
PARM 1 3 2 1 0
PACKAGE
   LABGRP
      SOLID        GAS    VOLATIL
SHIPMENT
   LABISO
       CR51       MN54       FE55       FE59       CO58       CO60
       KR85       SR89       SR90        Y91       ZR95       NB95
      RU103      RU106      SB125     TE125M      TE127     TE127M
      CS134      CS137      CE141      CE144      PM147      EU154
      PU238      PU239      PU240      PU241      AM241      CM242
      CM244
NORMAL
   NMODE=1
       9.000E-01  5.000E-02  5.000E-02  8.849E+01  4.025E+01  2.416E+01
       4.000E+00  3.100E+00  0.000E+00  1.100E-02  1.000E+00  0.000E+00
       0.000E+00  3.000E+01  2.000E+01  0.000E+00  1.000E+02  1.000E+02
       2.000E+00  8.000E-02  5.000E-02  8.500E-01  4.700E+02  7.800E+02
       2.800E+03
ACCIDENT
   SEVFRC
     NPOP=1
       NMODE=1
       4.62E-01  3.02E-01  1.76E-01  4.03E-02  1.18E-02  6.47E-03
       5.71E-04  1.13E-04
     NPOP=2
       NMODE=1
       4.35E-01  2.85E-01  2.21E-01  5.06E-02  6.64E-03  1.74E-03
       6.72E-05  5.93E-06
     NPOP=3
       NMODE=1
       5.83E-01  3.82E-01  2.78E-02  6.36E-03  7.42E-04  1.46E-04
       1.13E-05  9.94E-07
RELEASE
   RFRAC
     GROUP=1
       0.00E+00  6.00E-08  2.00E-07  2.00E-06  2.00E-06  2.00E-06
       2.00E-05  2.00E-05
     GROUP=2
       0.00E+00  9.90E-03  3.30E-02  3.90E-01  3.30E-01  3.30E-01
       6.30E-01  6.30E-01
     GROUP=3
       0.00E+00  6.00E-06  2.00E-05  2.00E-04  2.00E-04  2.00E-04
       2.00E-03  2.00E-03
EOF
ISOTOPES  -1 50185     1.00   13.000   1.00   0.00  VEGAS1
         CR51  7.40E-16     SOLID   2
         MN54  4.80E+01     SOLID   2
         FE55  3.82E+03     SOLID   2
         FE59  3.84E-10     SOLID   2
         CO58  3.67E-04     SOLID   2
         CO60  1.20E+04     SOLID   2
         KR85  1.96E+04       GAS  10
         SR89  1.42E-05     SOLID   2
         SR90  2.20E+05     SOLID   2
          Y91  5.81E-04     SOLID   2
         ZR95  1.78E-04     SOLID   2
         NB95  1.24E-02     SOLID   2
        RU103  2.40E-08   VOLATIL   7
        RU106  4.04E+04   VOLATIL   7
        SB125  5.80E+03     SOLID   2
       TE125M  1.63E+02     SOLID   2
        TE127  2.09E-01     SOLID   2
       TE127M  2.12E-01     SOLID   2
        CS134  1.09E+05   VOLATIL   7
        CS137  3.21E+05   VOLATIL   7
```

```
        CE141  2.71E-11     SOLID   2
        CE144  2.21E+04     SOLID   2
        PM147  9.17E+04     SOLID   2
        EU154  1.77E+04     SOLID   2
        PU238  1.72E+04     SOLID   2
        PU239  7.09E+02     SOLID   2
        PU240  1.32E+03     SOLID   2
        PU241  2.88E+05     SOLID   2
        AM241  3.17E+03     SOLID   2
        CM242  1.14E+02     SOLID   2
        CM244  2.18E+04     SOLID   2
LINK  1 1.84E+02 8.80E+01 3.80E+00 4.70E+02 2.25E-07 R 1
LINK  1 2.30E+01 4.00E+01 4.53E+02 7.80E+02 2.25E-07 S 1
LINK  1 1.22E+01 2.40E+01 2.51E+03 2.80E+03 3.60E-07 U 1
PKGSIZ
         VEGAS1     5.00
EOF
```

INCIDENT-FREE SUMMARY
******** **** *******

INCIDENT-FREE POPULATION EXPOSURE IN PERSON-REM

	PASSENGR	CREW	HANDLERS	OFF LINK	ON LINK	STOPS	STORAGE	TOTALS
LINK 1	0.00E+00	8.46E+02	0.00E+00	1.16E+00	7.53E+01	1.07E+03	0.00E+00	1.99E+03
LINK 2	0.00E+00	2.33E+02	0.00E+00	3.32E+01	7.94E+01	5.28E+02	0.00E+00	8.73E+02
LINK 3	0.00E+00	2.06E+02	0.00E+00	3.36E+00	4.45E+02	5.28E+02	0.00E+00	1.18E+03
RURAL	0.00E+00	8.46E+02	0.00E+00	1.16E+00	7.53E+01	1.07E+03	0.00E+00	1.99E+03
SUBURB	0.00E+00	2.33E+02	0.00E+00	3.32E+01	7.94E+01	5.28E+02	0.00E+00	8.73E+02
URBAN	0.00E+00	2.06E+02	0.00E+00	3.36E+00	4.45E+02	5.28E+02	0.00E+00	1.18E+03
TOTALS:	0.00E+00	1.28E+03	0.00E+00	3.77E+01	6.00E+02	2.12E+03	0.00E+00	4.05E+03

MAXIMUM INDIVIDUAL IN-TRANSIT DOSE

LINK 1 2.69E-02 REM
LINK 2 2.69E-02 REM
LINK 3 2.69E-02 REM

EXPECTED VALUES OF POPULATION RISK IN PERSON-REM

	GROUND	INHALED	RESUSPD	CLOUDSH	*INGESTION	TOTAL
LINK 1	1.04E+01	1.58E-01	4.46E-01	4.94E-04	0.00E+00	1.10E+01
LINK 2	1.57E+02	2.31E+00	6.52E+00	7.46E-03	0.00E+00	1.66E+02
LINK 3	1.22E+02	1.57E+00	4.43E+00	4.97E-03	0.00E+00	1.28E+02
RURAL	1.04E+01	1.58E-01	4.46E-01	4.94E-04	0.00E+00	1.10E+01
SUBURB	1.57E+02	2.31E+00	6.52E+00	7.46E-03	0.00E+00	1.66E+02
URBAN	1.22E+02	1.57E+00	4.43E+00	4.97E-03	0.00E+00	1.28E+02
TOTALS:	2.90E+02	4.03E+00	1.14E+01	1.29E-02	0.00E+00	3.05E+02

* NOTE THAT INGESTION RISK IS A SOCIETAL RISK;
THE USER MAY WISH TO TREAT THIS VALUE SEPARATELY.

```
                                   ECHO CHECK


&& Edited Mon Jun 21 15:23:48 1999
&& _North_route_via_city_with_rx_life_extension_
TITLE RADTRAN 4.0 INPUT
FORM UNIT
DIMEN 31 8 3 10 18
PARM 1 3 2 1 0
PACKAGE
   LABGRP
      SOLID        GAS    VOLATIL
SHIPMENT
   LABISO
       CR51       MN54       FE55       FE59       CO58       CO60
       KR85       SR89       SR90        Y91       ZR95       NB95
      RU103      RU106      SB125     TE125M      TE127     TE127M
      CS134      CS137      CE141      CE144      PM147      EU154
      PU238      PU239      PU240      PU241      AM241      CM242
      CM244
NORMAL
   NMODE=1
       9.000E-01  5.000E-02  5.000E-02  8.849E+01  4.025E+01  2.416E+01
       4.000E+00  3.100E+00  0.000E+00  1.100E-02  1.000E+00  0.000E+00
       0.000E+00  3.000E+01  2.000E+01  0.000E+00  1.000E+02  1.000E+02
       2.000E+00  8.000E-02  5.000E-02  8.500E-01  4.700E+02  7.800E+02
       2.800E+03
ACCIDENT
   SEVFRC
     NPOP=1
       NMODE=1
       4.62E-01  3.02E-01  1.76E-01  4.03E-02  1.18E-02  6.47E-03
       5.71E-04  1.13E-04
     NPOP=2
       NMODE=1
       4.35E-01  2.85E-01  2.21E-01  5.06E-02  6.64E-03  1.74E-03
       6.72E-05  5.93E-06
     NPOP=3
       NMODE=1
       5.83E-01  3.82E-01  2.78E-02  6.36E-03  7.42E-04  1.46E-04
       1.13E-05  9.94E-07
RELEASE
   RFRAC
     GROUP=1
       0.00E+00  6.00E-08  2.00E-07  2.00E-06  2.00E-06  2.00E-06
       2.00E-05  2.00E-05
     GROUP=2
       0.00E+00  9.90E-03  3.30E-02  3.90E-01  3.30E-01  3.30E-01
       6.30E-01  6.30E-01
     GROUP=3
       0.00E+00  6.00E-06  2.00E-05  2.00E-04  2.00E-04  2.00E-04
       2.00E-03  2.00E-03
EOF
ISOTOPES  -1 75278     1.00   13.000   1.00   0.00  VEGAS1
         CR51  7.40E-16     SOLID   2
         MN54  4.80E+01     SOLID   2
         FE55  3.82E+03     SOLID   2
         FE59  3.84E-10     SOLID   2
         CO58  3.67E-04     SOLID   2
         CO60  1.20E+04     SOLID   2
         KR85  1.96E+04       GAS  10
         SR89  1.42E-05     SOLID   2
         SR90  2.20E+05     SOLID   2
          Y91  5.81E-04     SOLID   2
         ZR95  1.78E-04     SOLID   2
         NB95  1.24E-02     SOLID   2
        RU103  2.40E-08   VOLATIL   7
        RU106  4.04E+04   VOLATIL   7
        SB125  5.80E+03     SOLID   2
       TE125M  1.63E+02     SOLID   2
        TE127  2.09E-01     SOLID   2
       TE127M  2.12E-01     SOLID   2
        CS134  1.09E+05   VOLATIL   7
        CS137  3.21E+05   VOLATIL   7
```

```
        CE141  2.71E-11     SOLID   2
        CE144  2.21E+04     SOLID   2
        PM147  9.17E+04     SOLID   2
        EU154  1.77E+04     SOLID   2
        PU238  1.72E+04     SOLID   2
        PU239  7.09E+02     SOLID   2
        PU240  1.32E+03     SOLID   2
        PU241  2.88E+05     SOLID   2
        AM241  3.17E+03     SOLID   2
        CM242  1.14E+02     SOLID   2
        CM244  2.18E+04     SOLID   2
LINK  1 1.84E+02 8.80E+01 3.90E+00 4.70E+02 2.25E-07 R 1
LINK  1 3.14E+01 4.00E+01 4.64E+02 7.80E+02 2.25E-07 S 1
LINK  1 1.50E+01 2.40E+01 2.53E+03 2.80E+03 3.60E-07 U 1
PKGSIZ
         VEGAS1     5.00
EOF
```

INCIDENT-FREE SUMMARY
******** **** *******

INCIDENT-FREE POPULATION EXPOSURE IN PERSON-REM

	PASSENGR	CREW	HANDLERS	OFF LINK	ON LINK	STOPS	STORAGE	TOTALS
LINK 1	0.00E+00	1.27E+03	0.00E+00	1.79E+00	1.13E+02	1.60E+03	0.00E+00	2.99E+03
LINK 2	0.00E+00	4.77E+02	0.00E+00	6.95E+01	1.63E+02	7.91E+02	0.00E+00	1.50E+03
LINK 3	0.00E+00	3.79E+02	0.00E+00	6.25E+00	8.21E+02	7.91E+02	0.00E+00	2.00E+03
RURAL	0.00E+00	1.27E+03	0.00E+00	1.79E+00	1.13E+02	1.60E+03	0.00E+00	2.99E+03
SUBURB	0.00E+00	4.77E+02	0.00E+00	6.95E+01	1.63E+02	7.91E+02	0.00E+00	1.50E+03
URBAN	0.00E+00	3.79E+02	0.00E+00	6.25E+00	8.21E+02	7.91E+02	0.00E+00	2.00E+03
TOTALS:	0.00E+00	2.13E+03	0.00E+00	7.76E+01	1.10E+03	3.18E+03	0.00E+00	6.48E+03

MAXIMUM INDIVIDUAL IN-TRANSIT DOSE

LINK 1 4.03E-02 REM
LINK 2 4.03E-02 REM
LINK 3 4.03E-02 REM

EXPECTED VALUES OF POPULATION RISK IN PERSON-REM

	GROUND	INHALED	RESUSPD	CLOUDSH	*INGESTION	TOTAL
LINK 1	1.60E+01	2.43E-01	6.86E-01	7.60E-04	0.00E+00	1.69E+01
LINK 2	3.29E+02	4.84E+00	1.37E+01	1.56E-02	0.00E+00	3.48E+02
LINK 3	2.27E+02	2.91E+00	8.24E+00	9.24E-03	0.00E+00	2.38E+02
RURAL	1.60E+01	2.43E-01	6.86E-01	7.60E-04	0.00E+00	1.69E+01
SUBURB	3.29E+02	4.84E+00	1.37E+01	1.56E-02	0.00E+00	3.48E+02
URBAN	2.27E+02	2.91E+00	8.24E+00	9.24E-03	0.00E+00	2.38E+02
TOTALS:	5.72E+02	7.99E+00	2.26E+01	2.56E-02	0.00E+00	6.03E+02

* NOTE THAT INGESTION RISK IS A SOCIETAL RISK;
THE USER MAY WISH TO TREAT THIS VALUE SEPARATELY.

```
                                ECHO CHECK


&& Edited Mon Jun 21 15:25:58 1999
&& _North_route_via_city_without_rx_life_extension_
TITLE RADTRAN 4.0 INPUT
FORM UNIT
DIMEN 31 8 3 10 18
PARM 1 3 2 1 0
PACKAGE
   LABGRP
      SOLID        GAS    VOLATIL
SHIPMENT
   LABISO
       CR51       MN54       FE55       FE59       CO58       CO60
       KR85       SR89       SR90        Y91       ZR95       NB95
      RU103      RU106      SB125     TE125M      TE127     TE127M
      CS134      CS137      CE141      CE144      PM147      EU154
      PU238      PU239      PU240      PU241      AM241      CM242
      CM244
NORMAL
   NMODE=1
       9.000E-01  5.000E-02  5.000E-02  8.849E+01  4.025E+01  2.416E+01
       4.000E+00  3.100E+00  0.000E+00  1.100E-02  1.000E+00  0.000E+00
       0.000E+00  3.000E+01  2.000E+01  0.000E+00  1.000E+02  1.000E+02
       2.000E+00  8.000E-02  5.000E-02  8.500E-01  4.700E+02  7.800E+02
       2.800E+03
ACCIDENT
   SEVFRC
     NPOP=1
       NMODE=1
       4.62E-01  3.02E-01  1.76E-01  4.03E-02  1.18E-02  6.47E-03
       5.71E-04  1.13E-04
     NPOP=2
       NMODE=1
       4.35E-01  2.85E-01  2.21E-01  5.06E-02  6.64E-03  1.74E-03
       6.72E-05  5.93E-06
     NPOP=3
       NMODE=1
       5.83E-01  3.82E-01  2.78E-02  6.36E-03  7.42E-04  1.46E-04
       1.13E-05  9.94E-07
RELEASE
   RFRAC
     GROUP=1
       0.00E+00  6.00E-08  2.00E-07  2.00E-06  2.00E-06  2.00E-06
       2.00E-05  2.00E-05
     GROUP=2
       0.00E+00  9.90E-03  3.30E-02  3.90E-01  3.30E-01  3.30E-01
       6.30E-01  6.30E-01
     GROUP=3
       0.00E+00  6.00E-06  2.00E-05  2.00E-04  2.00E-04  2.00E-04
       2.00E-03  2.00E-03
EOF
ISOTOPES  -1 50185     1.00   13.000   1.00   0.00  VEGAS1
         CR51  7.40E-16     SOLID   2
         MN54  4.80E+01     SOLID   2
         FE55  3.82E+03     SOLID   2
         FE59  3.84E-10     SOLID   2
         CO58  3.67E-04     SOLID   2
         CO60  1.20E+04     SOLID   2
         KR85  1.96E+04       GAS  10
         SR89  1.42E-05     SOLID   2
         SR90  2.20E+05     SOLID   2
          Y91  5.81E-04     SOLID   2
         ZR95  1.78E-04     SOLID   2
         NB95  1.24E-02     SOLID   2
        RU103  2.40E-08   VOLATIL   7
        RU106  4.04E+04   VOLATIL   7
        SB125  5.80E+03     SOLID   2
       TE125M  1.63E+02     SOLID   2
        TE127  2.09E-01     SOLID   2
       TE127M  2.12E-01     SOLID   2
        CS134  1.09E+05   VOLATIL   7
        CS137  3.21E+05   VOLATIL   7
```

```
        CE141  2.71E-11     SOLID   2
        CE144  2.21E+04     SOLID   2
        PM147  9.17E+04     SOLID   2
        EU154  1.77E+04     SOLID   2
        PU238  1.72E+04     SOLID   2
        PU239  7.09E+02     SOLID   2
        PU240  1.32E+03     SOLID   2
        PU241  2.88E+05     SOLID   2
        AM241  3.17E+03     SOLID   2
        CM242  1.14E+02     SOLID   2
        CM244  2.18E+04     SOLID   2
LINK  1 1.84E+02 8.80E+01 3.90E+00 4.70E+02 2.25E-07 R 1
LINK  1 3.14E+01 4.00E+01 4.64E+02 7.80E+02 2.25E-07 S 1
LINK  1 1.50E+01 2.40E+01 2.53E+03 2.80E+03 3.60E-07 U 1
PKGSIZ
         VEGAS1     5.00
EOF
```

INCIDENT-FREE SUMMARY
******** **** *******

INCIDENT-FREE POPULATION EXPOSURE IN PERSON-REM

	PASSENGR	CREW	HANDLERS	OFF LINK	ON LINK	STOPS	STORAGE	TOTALS
LINK 1	0.00E+00	8.46E+02	0.00E+00	1.19E+00	7.53E+01	1.07E+03	0.00E+00	1.99E+03
LINK 2	0.00E+00	3.18E+02	0.00E+00	4.64E+01	1.08E+02	5.28E+02	0.00E+00	1.00E+03
LINK 3	0.00E+00	2.53E+02	0.00E+00	4.16E+00	5.47E+02	5.28E+02	0.00E+00	1.33E+03
RURAL	0.00E+00	8.46E+02	0.00E+00	1.19E+00	7.53E+01	1.07E+03	0.00E+00	1.99E+03
SUBURB	0.00E+00	3.18E+02	0.00E+00	4.64E+01	1.08E+02	5.28E+02	0.00E+00	1.00E+03
URBAN	0.00E+00	2.53E+02	0.00E+00	4.16E+00	5.47E+02	5.28E+02	0.00E+00	1.33E+03
TOTALS:	0.00E+00	1.42E+03	0.00E+00	5.17E+01	7.31E+02	2.12E+03	0.00E+00	4.32E+03

MAXIMUM INDIVIDUAL IN-TRANSIT DOSE

LINK 1 2.69E-02 REM
LINK 2 2.69E-02 REM
LINK 3 2.69E-02 REM

EXPECTED VALUES OF POPULATION RISK IN PERSON-REM

	GROUND	INHALED	RESUSPD	CLOUDSH	*INGESTION	TOTAL
LINK 1	1.07E+01	1.62E-01	4.57E-01	5.07E-04	0.00E+00	1.13E+01
LINK 2	2.19E+02	3.22E+00	9.11E+00	1.04E-02	0.00E+00	2.32E+02
LINK 3	1.51E+02	1.94E+00	5.49E+00	6.16E-03	0.00E+00	1.59E+02
RURAL	1.07E+01	1.62E-01	4.57E-01	5.07E-04	0.00E+00	1.13E+01
SUBURB	2.19E+02	3.22E+00	9.11E+00	1.04E-02	0.00E+00	2.32E+02
URBAN	1.51E+02	1.94E+00	5.49E+00	6.16E-03	0.00E+00	1.59E+02
TOTALS:	3.82E+02	5.33E+00	1.51E+01	1.71E-02	0.00E+00	4.02E+02

* NOTE THAT INGESTION RISK IS A SOCIETAL RISK;
THE USER MAY WISH TO TREAT THIS VALUE SEPARATELY.

```
                                ECHO CHECK


&& Edited Mon Jun 21 15:43:05 1999
&& _South_route_via_city_with_rx_life_extension_
TITLE RADTRAN 4.0 INPUT
FORM UNIT
DIMEN 31 8 3 10 18
PARM 1 3 2 1 0
PACKAGE
   LABGRP
      SOLID        GAS    VOLATIL
SHIPMENT
   LABISO
       CR51       MN54       FE55       FE59       CO58       CO60
       KR85       SR89       SR90        Y91       ZR95       NB95
      RU103      RU106      SB125     TE125M      TE127     TE127M
      CS134      CS137      CE141      CE144      PM147      EU154
      PU238      PU239      PU240      PU241      AM241      CM242
      CM244
NORMAL
   NMODE=1
       9.000E-01  5.000E-02  5.000E-02  8.849E+01  4.025E+01  2.416E+01
       4.000E+00  3.100E+00  0.000E+00  1.100E-02  1.000E+00  0.000E+00
       0.000E+00  3.000E+01  2.000E+01  0.000E+00  1.000E+02  1.000E+02
       2.000E+00  8.000E-02  5.000E-02  8.500E-01  4.700E+02  7.800E+02
       2.800E+03
ACCIDENT
   SEVFRC
     NPOP=1
       NMODE=1
       4.62E-01  3.02E-01  1.76E-01  4.03E-02  1.18E-02  6.47E-03
       5.71E-04  1.13E-04
     NPOP=2
       NMODE=1
       4.35E-01  2.85E-01  2.21E-01  5.06E-02  6.64E-03  1.74E-03
       6.72E-05  5.93E-06
     NPOP=3
       NMODE=1
       5.83E-01  3.82E-01  2.78E-02  6.36E-03  7.42E-04  1.46E-04
       1.13E-05  9.94E-07
RELEASE
   RFRAC
     GROUP=1
       0.00E+00  6.00E-08  2.00E-07  2.00E-06  2.00E-06  2.00E-06
       2.00E-05  2.00E-05
     GROUP=2
       0.00E+00  9.90E-03  3.30E-02  3.90E-01  3.30E-01  3.30E-01
       6.30E-01  6.30E-01
     GROUP=3
       0.00E+00  6.00E-06  2.00E-05  2.00E-04  2.00E-04  2.00E-04
       2.00E-03  2.00E-03
EOF
ISOTOPES  -1 75278     1.00   13.000   1.00   0.00  VEGAS1
         CR51  7.40E-16     SOLID   2
         MN54  4.80E+01     SOLID   2
         FE55  3.82E+03     SOLID   2
         FE59  3.84E-10     SOLID   2
         CO58  3.67E-04     SOLID   2
         CO60  1.20E+04     SOLID   2
         KR85  1.96E+04       GAS  10
         SR89  1.42E-05     SOLID   2
         SR90  2.20E+05     SOLID   2
          Y91  5.81E-04     SOLID   2
         ZR95  1.78E-04     SOLID   2
         NB95  1.24E-02     SOLID   2
        RU103  2.40E-08   VOLATIL   7
        RU106  4.04E+04   VOLATIL   7
        SB125  5.80E+03     SOLID   2
       TE125M  1.63E+02     SOLID   2
        TE127  2.09E-01     SOLID   2
       TE127M  2.12E-01     SOLID   2
        CS134  1.09E+05   VOLATIL   7
        CS137  3.21E+05   VOLATIL   7
```

```
        CE141  2.71E-11     SOLID   2
        CE144  2.21E+04     SOLID   2
        PM147  9.17E+04     SOLID   2
        EU154  1.77E+04     SOLID   2
        PU238  1.72E+04     SOLID   2
        PU239  7.09E+02     SOLID   2
        PU240  1.32E+03     SOLID   2
        PU241  2.88E+05     SOLID   2
        AM241  3.17E+03     SOLID   2
        CM242  1.14E+02     SOLID   2
        CM244  2.18E+04     SOLID   2
LINK  1 1.18E+02 8.80E+01 6.20E+00 4.70E+02 2.25E-07 R 1
LINK  1 2.51E+01 4.00E+01 3.71E+02 7.80E+02 2.25E-07 S 1
LINK  1 2.27E+01 2.40E+01 3.21E+03 2.80E+03 3.60E-07 U 1
PKGSIZ
         VEGAS1     5.00
EOF
```

INCIDENT-FREE SUMMARY
******** **** *******

INCIDENT-FREE POPULATION EXPOSURE IN PERSON-REM

	PASSENGR	CREW	HANDLERS	OFF LINK	ON LINK	STOPS	STORAGE	TOTALS
LINK 1	0.00E+00	8.14E+02	0.00E+00	1.82E+00	7.24E+01	1.03E+03	0.00E+00	1.92E+03
LINK 2	0.00E+00	3.81E+02	0.00E+00	4.44E+01	1.30E+02	7.91E+02	0.00E+00	1.35E+03
LINK 3	0.00E+00	5.74E+02	0.00E+00	1.20E+01	1.24E+03	7.91E+02	0.00E+00	2.62E+03
RURAL	0.00E+00	8.14E+02	0.00E+00	1.82E+00	7.24E+01	1.03E+03	0.00E+00	1.92E+03
SUBURB	0.00E+00	3.81E+02	0.00E+00	4.44E+01	1.30E+02	7.91E+02	0.00E+00	1.35E+03
URBAN	0.00E+00	5.74E+02	0.00E+00	1.20E+01	1.24E+03	7.91E+02	0.00E+00	2.62E+03
TOTALS:	0.00E+00	1.77E+03	0.00E+00	5.83E+01	1.44E+03	2.61E+03	0.00E+00	5.88E+03

MAXIMUM INDIVIDUAL IN-TRANSIT DOSE

LINK 1 4.03E-02 REM
LINK 2 4.03E-02 REM
LINK 3 4.03E-02 REM

EXPECTED VALUES OF POPULATION RISK IN PERSON-REM

	GROUND	INHALED	RESUSPD	CLOUDSH	*INGESTION	TOTAL
LINK 1	1.63E+01	2.47E-01	6.99E-01	7.75E-04	0.00E+00	1.73E+01
LINK 2	2.10E+02	3.09E+00	8.74E+00	1.00E-02	0.00E+00	2.22E+02
LINK 3	4.36E+02	5.60E+00	1.58E+01	1.78E-02	0.00E+00	4.58E+02
RURAL	1.63E+01	2.47E-01	6.99E-01	7.75E-04	0.00E+00	1.73E+01
SUBURB	2.10E+02	3.09E+00	8.74E+00	1.00E-02	0.00E+00	2.22E+02
URBAN	4.36E+02	5.60E+00	1.58E+01	1.78E-02	0.00E+00	4.58E+02
TOTALS:	6.63E+02	8.94E+00	2.53E+01	2.85E-02	0.00E+00	6.97E+02

* NOTE THAT INGESTION RISK IS A SOCIETAL RISK;
THE USER MAY WISH TO TREAT THIS VALUE SEPARATELY.

```
                                   ECHO CHECK


&& Edited Mon Jun 21 15:45:28 1999
&& _South_route_via_city_without_rx_life_extension_
TITLE RADTRAN 4.0 INPUT
FORM UNIT
DIMEN 31 8 3 10 18
PARM 1 3 2 1 0
PACKAGE
   LABGRP
      SOLID        GAS    VOLATIL
SHIPMENT
   LABISO
       CR51       MN54       FE55       FE59       CO58       CO60
       KR85       SR89       SR90        Y91       ZR95       NB95
      RU103      RU106      SB125     TE125M      TE127     TE127M
      CS134      CS137      CE141      CE144      PM147      EU154
      PU238      PU239      PU240      PU241      AM241      CM242
      CM244
NORMAL
   NMODE=1
       9.000E-01  5.000E-02  5.000E-02  8.849E+01  4.025E+01  2.416E+01
       4.000E+00  3.100E+00  0.000E+00  1.100E-02  1.000E+00  0.000E+00
       0.000E+00  3.000E+01  2.000E+01  0.000E+00  1.000E+02  1.000E+02
       2.000E+00  8.000E-02  5.000E-02  8.500E-01  4.700E+02  7.800E+02
       2.800E+03
ACCIDENT
   SEVFRC
     NPOP=1
       NMODE=1
       4.62E-01  3.02E-01  1.76E-01  4.03E-02  1.18E-02  6.47E-03
       5.71E-04  1.13E-04
     NPOP=2
       NMODE=1
       4.35E-01  2.85E-01  2.21E-01  5.06E-02  6.64E-03  1.74E-03
       6.72E-05  5.93E-06
     NPOP=3
       NMODE=1
       5.83E-01  3.82E-01  2.78E-02  6.36E-03  7.42E-04  1.46E-04
       1.13E-05  9.94E-07
RELEASE
   RFRAC
     GROUP=1
       0.00E+00  6.00E-08  2.00E-07  2.00E-06  2.00E-06  2.00E-06
       2.00E-05  2.00E-05
     GROUP=2
       0.00E+00  9.90E-03  3.30E-02  3.90E-01  3.30E-01  3.30E-01
       6.30E-01  6.30E-01
     GROUP=3
       0.00E+00  6.00E-06  2.00E-05  2.00E-04  2.00E-04  2.00E-04
       2.00E-03  2.00E-03
EOF
ISOTOPES  -1 50185     1.00   13.000   1.00   0.00  VEGAS1
         CR51  7.40E-16     SOLID   2
         MN54  4.80E+01     SOLID   2
         FE55  3.82E+03     SOLID   2
         FE59  3.84E-10     SOLID   2
         CO58  3.67E-04     SOLID   2
         CO60  1.20E+04     SOLID   2
         KR85  1.96E+04       GAS  10
         SR89  1.42E-05     SOLID   2
         SR90  2.20E+05     SOLID   2
          Y91  5.81E-04     SOLID   2
         ZR95  1.78E-04     SOLID   2
         NB95  1.24E-02     SOLID   2
        RU103  2.40E-08   VOLATIL   7
        RU106  4.04E+04   VOLATIL   7
        SB125  5.80E+03     SOLID   2
       TE125M  1.63E+02     SOLID   2
        TE127  2.09E-01     SOLID   2
       TE127M  2.12E-01     SOLID   2
        CS134  1.09E+05   VOLATIL   7
        CS137  3.21E+05   VOLATIL   7
```

```
        CE141  2.71E-11     SOLID   2
        CE144  2.21E+04     SOLID   2
        PM147  9.17E+04     SOLID   2
        EU154  1.77E+04     SOLID   2
        PU238  1.72E+04     SOLID   2
        PU239  7.09E+02     SOLID   2
        PU240  1.32E+03     SOLID   2
        PU241  2.88E+05     SOLID   2
        AM241  3.17E+03     SOLID   2
        CM242  1.14E+02     SOLID   2
        CM244  2.18E+04     SOLID   2
LINK  1 1.18E+02 8.80E+01 6.20E+00 4.70E+02 2.25E-07 R 1
LINK  1 2.51E+01 4.00E+01 3.71E+02 7.80E+02 2.25E-07 S 1
LINK  1 2.27E+01 2.40E+01 3.21E+03 2.80E+03 3.60E-07 U 1
PKGSIZ
         VEGAS1     5.00
EOF
```

INCIDENT-FREE SUMMARY
******** **** *******

INCIDENT-FREE POPULATION EXPOSURE IN PERSON-REM

	PASSENGR	CREW	HANDLERS	OFF LINK	ON LINK	STOPS	STORAGE	TOTALS
LINK 1	0.00E+00	5.43E+02	0.00E+00	1.22E+00	4.83E+01	6.85E+02	0.00E+00	1.28E+03
LINK 2	0.00E+00	2.54E+02	0.00E+00	2.96E+01	8.67E+01	5.28E+02	0.00E+00	8.98E+02
LINK 3	0.00E+00	3.83E+02	0.00E+00	8.00E+00	8.28E+02	5.28E+02	0.00E+00	1.75E+03
RURAL	0.00E+00	5.43E+02	0.00E+00	1.22E+00	4.83E+01	6.85E+02	0.00E+00	1.28E+03
SUBURB	0.00E+00	2.54E+02	0.00E+00	2.96E+01	8.67E+01	5.28E+02	0.00E+00	8.98E+02
URBAN	0.00E+00	3.83E+02	0.00E+00	8.00E+00	8.28E+02	5.28E+02	0.00E+00	1.75E+03
TOTALS:	0.00E+00	1.18E+03	0.00E+00	3.88E+01	9.63E+02	1.74E+03	0.00E+00	3.92E+03

MAXIMUM INDIVIDUAL IN-TRANSIT DOSE

LINK 1 2.69E-02 REM
LINK 2 2.69E-02 REM
LINK 3 2.69E-02 REM

EXPECTED VALUES OF POPULATION RISK IN PERSON-REM

	GROUND	INHALED	RESUSPD	CLOUDSH	*INGESTION	TOTAL
LINK 1	1.09E+01	1.65E-01	4.66E-01	5.17E-04	0.00E+00	1.15E+01
LINK 2	1.40E+02	2.06E+00	5.83E+00	6.67E-03	0.00E+00	1.48E+02
LINK 3	2.91E+02	3.73E+00	1.05E+01	1.18E-02	0.00E+00	3.05E+02
RURAL	1.09E+01	1.65E-01	4.66E-01	5.17E-04	0.00E+00	1.15E+01
SUBURB	1.40E+02	2.06E+00	5.83E+00	6.67E-03	0.00E+00	1.48E+02
URBAN	2.91E+02	3.73E+00	1.05E+01	1.18E-02	0.00E+00	3.05E+02
TOTALS:	4.42E+02	5.96E+00	1.68E+01	1.90E-02	0.00E+00	4.65E+02

* NOTE THAT INGESTION RISK IS A SOCIETAL RISK;
THE USER MAY WISH TO TREAT THIS VALUE SEPARATELY.

```
                                ECHO CHECK


&& Edited Mon Jun 21 15:48:15 1999
&& _South_route_via_beltway_with_rx_life_extension_
TITLE RADTRAN 4.0 INPUT
FORM UNIT
DIMEN 31 8 3 10 18
PARM 1 3 2 1 0
PACKAGE
   LABGRP
      SOLID        GAS    VOLATIL
SHIPMENT
   LABISO
       CR51       MN54       FE55       FE59       CO58       CO60
       KR85       SR89       SR90        Y91       ZR95       NB95
      RU103      RU106      SB125     TE125M      TE127     TE127M
      CS134      CS137      CE141      CE144      PM147      EU154
      PU238      PU239      PU240      PU241      AM241      CM242
      CM244
NORMAL
   NMODE=1
       9.000E-01  5.000E-02  5.000E-02  8.849E+01  4.025E+01  2.416E+01
       4.000E+00  3.100E+00  0.000E+00  1.100E-02  1.000E+00  0.000E+00
       0.000E+00  3.000E+01  2.000E+01  0.000E+00  1.000E+02  1.000E+02
       2.000E+00  8.000E-02  5.000E-02  8.500E-01  4.700E+02  7.800E+02
       2.800E+03
ACCIDENT
   SEVFRC
     NPOP=1
       NMODE=1
       4.62E-01  3.02E-01  1.76E-01  4.03E-02  1.18E-02  6.47E-03
       5.71E-04  1.13E-04
     NPOP=2
       NMODE=1
       4.35E-01  2.85E-01  2.21E-01  5.06E-02  6.64E-03  1.74E-03
       6.72E-05  5.93E-06
     NPOP=3
       NMODE=1
       5.83E-01  3.82E-01  2.78E-02  6.36E-03  7.42E-04  1.46E-04
       1.13E-05  9.94E-07
RELEASE
   RFRAC
     GROUP=1
       0.00E+00  6.00E-08  2.00E-07  2.00E-06  2.00E-06  2.00E-06
       2.00E-05  2.00E-05
     GROUP=2
       0.00E+00  9.90E-03  3.30E-02  3.90E-01  3.30E-01  3.30E-01
       6.30E-01  6.30E-01
     GROUP=3
       0.00E+00  6.00E-06  2.00E-05  2.00E-04  2.00E-04  2.00E-04
       2.00E-03  2.00E-03
EOF
ISOTOPES  -1 75278     1.00   13.000   1.00   0.00  VEGAS1
         CR51  7.40E-16     SOLID   2
         MN54  4.80E+01     SOLID   2
         FE55  3.82E+03     SOLID   2
         FE59  3.84E-10     SOLID   2
         CO58  3.67E-04     SOLID   2
         CO60  1.20E+04     SOLID   2
         KR85  1.96E+04       GAS  10
         SR89  1.42E-05     SOLID   2
         SR90  2.20E+05     SOLID   2
          Y91  5.81E-04     SOLID   2
         ZR95  1.78E-04     SOLID   2
         NB95  1.24E-02     SOLID   2
        RU103  2.40E-08   VOLATIL   7
        RU106  4.04E+04   VOLATIL   7
        SB125  5.80E+03     SOLID   2
       TE125M  1.63E+02     SOLID   2
        TE127  2.09E-01     SOLID   2
       TE127M  2.12E-01     SOLID   2
        CS134  1.09E+05   VOLATIL   7
        CS137  3.21E+05   VOLATIL   7
```

```
        CE141  2.71E-11     SOLID   2
        CE144  2.21E+04     SOLID   2
        PM147  9.17E+04     SOLID   2
        EU154  1.77E+04     SOLID   2
        PU238  1.72E+04     SOLID   2
        PU239  7.09E+02     SOLID   2
        PU240  1.32E+03     SOLID   2
        PU241  2.88E+05     SOLID   2
        AM241  3.17E+03     SOLID   2
        CM242  1.14E+02     SOLID   2
        CM244  2.18E+04     SOLID   2
LINK  1 1.18E+02 8.80E+01 6.20E+00 4.70E+02 2.25E-07 R 1
LINK  1 3.32E+01 4.00E+01 4.91E+02 7.80E+02 2.25E-07 S 1
LINK  1 2.59E+01 2.40E+01 2.50E+03 2.80E+03 3.60E-07 U 1
PKGSIZ
         VEGAS1     5.00
EOF
```

INCIDENT-FREE SUMMARY
******** **** *******

INCIDENT-FREE POPULATION EXPOSURE IN PERSON-REM

	PASSENGR	CREW	HANDLERS	OFF LINK	ON LINK	STOPS	STORAGE	TOTALS
LINK 1	0.00E+00	8.14E+02	0.00E+00	1.82E+00	7.24E+01	1.03E+03	0.00E+00	1.92E+03
LINK 2	0.00E+00	5.04E+02	0.00E+00	7.78E+01	1.72E+02	7.91E+02	0.00E+00	1.55E+03
LINK 3	0.00E+00	6.55E+02	0.00E+00	1.07E+01	1.42E+03	7.91E+02	0.00E+00	2.87E+03
RURAL	0.00E+00	8.14E+02	0.00E+00	1.82E+00	7.24E+01	1.03E+03	0.00E+00	1.92E+03
SUBURB	0.00E+00	5.04E+02	0.00E+00	7.78E+01	1.72E+02	7.91E+02	0.00E+00	1.55E+03
URBAN	0.00E+00	6.55E+02	0.00E+00	1.07E+01	1.42E+03	7.91E+02	0.00E+00	2.87E+03
TOTALS:	0.00E+00	1.97E+03	0.00E+00	9.03E+01	1.66E+03	2.61E+03	0.00E+00	6.34E+03

MAXIMUM INDIVIDUAL IN-TRANSIT DOSE

LINK 1 4.03E-02 REM
LINK 2 4.03E-02 REM
LINK 3 4.03E-02 REM

EXPECTED VALUES OF POPULATION RISK IN PERSON-REM

	GROUND	INHALED	RESUSPD	CLOUDSH	*INGESTION	TOTAL
LINK 1	1.63E+01	2.47E-01	6.99E-01	7.75E-04	0.00E+00	1.73E+01
LINK 2	3.68E+02	5.41E+00	1.53E+01	1.75E-02	0.00E+00	3.89E+02
LINK 3	3.88E+02	4.97E+00	1.41E+01	1.58E-02	0.00E+00	4.07E+02
RURAL	1.63E+01	2.47E-01	6.99E-01	7.75E-04	0.00E+00	1.73E+01
SUBURB	3.68E+02	5.41E+00	1.53E+01	1.75E-02	0.00E+00	3.89E+02
URBAN	3.88E+02	4.97E+00	1.41E+01	1.58E-02	0.00E+00	4.07E+02
TOTALS:	7.72E+02	1.06E+01	3.00E+01	3.41E-02	0.00E+00	8.13E+02

* NOTE THAT INGESTION RISK IS A SOCIETAL RISK;
THE USER MAY WISH TO TREAT THIS VALUE SEPARATELY.

```
                                   ECHO CHECK


&& Edited Mon Jun 21 15:51:08 1999
&& _South_route_via_beltway_without_rx_life_extension_
TITLE RADTRAN 4.0 INPUT
FORM UNIT
DIMEN 31 8 3 10 18
PARM 1 3 2 1 0
PACKAGE
   LABGRP
      SOLID        GAS    VOLATIL
SHIPMENT
   LABISO
       CR51       MN54       FE55       FE59       CO58       CO60
       KR85       SR89       SR90        Y91       ZR95       NB95
      RU103      RU106      SB125     TE125M      TE127     TE127M
      CS134      CS137      CE141      CE144      PM147      EU154
      PU238      PU239      PU240      PU241      AM241      CM242
      CM244
NORMAL
   NMODE=1
       9.000E-01  5.000E-02  5.000E-02  8.849E+01  4.025E+01  2.416E+01
       4.000E+00  3.100E+00  0.000E+00  1.100E-02  1.000E+00  0.000E+00
       0.000E+00  3.000E+01  2.000E+01  0.000E+00  1.000E+02  1.000E+02
       2.000E+00  8.000E-02  5.000E-02  8.500E-01  4.700E+02  7.800E+02
       2.800E+03
ACCIDENT
   SEVFRC
     NPOP=1
       NMODE=1
       4.62E-01  3.02E-01  1.76E-01  4.03E-02  1.18E-02  6.47E-03
       5.71E-04  1.13E-04
     NPOP=2
       NMODE=1
       4.35E-01  2.85E-01  2.21E-01  5.06E-02  6.64E-03  1.74E-03
       6.72E-05  5.93E-06
     NPOP=3
       NMODE=1
       5.83E-01  3.82E-01  2.78E-02  6.36E-03  7.42E-04  1.46E-04
       1.13E-05  9.94E-07
RELEASE
   RFRAC
     GROUP=1
       0.00E+00  6.00E-08  2.00E-07  2.00E-06  2.00E-06  2.00E-06
       2.00E-05  2.00E-05
     GROUP=2
       0.00E+00  9.90E-03  3.30E-02  3.90E-01  3.30E-01  3.30E-01
       6.30E-01  6.30E-01
     GROUP=3
       0.00E+00  6.00E-06  2.00E-05  2.00E-04  2.00E-04  2.00E-04
       2.00E-03  2.00E-03
EOF
ISOTOPES  -1 50185     1.00   13.000   1.00   0.00  VEGAS1
         CR51  7.40E-16     SOLID   2
         MN54  4.80E+01     SOLID   2
         FE55  3.82E+03     SOLID   2
         FE59  3.84E-10     SOLID   2
         CO58  3.67E-04     SOLID   2
         CO60  1.20E+04     SOLID   2
         KR85  1.96E+04       GAS  10
         SR89  1.42E-05     SOLID   2
         SR90  2.20E+05     SOLID   2
          Y91  5.81E-04     SOLID   2
         ZR95  1.78E-04     SOLID   2
         NB95  1.24E-02     SOLID   2
        RU103  2.40E-08   VOLATIL   7
        RU106  4.04E+04   VOLATIL   7
        SB125  5.80E+03     SOLID   2
       TE125M  1.63E+02     SOLID   2
        TE127  2.09E-01     SOLID   2
       TE127M  2.12E-01     SOLID   2
        CS134  1.09E+05   VOLATIL   7
        CS137  3.21E+05   VOLATIL   7
```

```
        CE141  2.71E-11     SOLID   2
        CE144  2.21E+04     SOLID   2
        PM147  9.17E+04     SOLID   2
        EU154  1.77E+04     SOLID   2
        PU238  1.72E+04     SOLID   2
        PU239  7.09E+02     SOLID   2
        PU240  1.32E+03     SOLID   2
        PU241  2.88E+05     SOLID   2
        AM241  3.17E+03     SOLID   2
        CM242  1.14E+02     SOLID   2
        CM244  2.18E+04     SOLID   2
LINK  1 1.18E+02 8.80E+01 6.20E+00 4.70E+02 2.25E-07 R 1
LINK  1 3.32E+01 4.00E+01 4.91E+02 7.80E+02 2.25E-07 S 1
LINK  1 2.59E+01 2.40E+01 2.50E+03 2.80E+03 3.60E-07 U 1
PKGSIZ
         VEGAS1     5.00
EOF
```

INCIDENT-FREE SUMMARY
******** **** *******

INCIDENT-FREE POPULATION EXPOSURE IN PERSON-REM

	PASSENGR	CREW	HANDLERS	OFF LINK	ON LINK	STOPS	STORAGE	TOTALS
LINK 1	0.00E+00	5.43E+02	0.00E+00	1.22E+00	4.83E+01	6.85E+02	0.00E+00	1.28E+03
LINK 2	0.00E+00	3.36E+02	0.00E+00	5.19E+01	1.15E+02	5.28E+02	0.00E+00	1.03E+03
LINK 3	0.00E+00	4.37E+02	0.00E+00	7.10E+00	9.45E+02	5.28E+02	0.00E+00	1.92E+03
RURAL	0.00E+00	5.43E+02	0.00E+00	1.22E+00	4.83E+01	6.85E+02	0.00E+00	1.28E+03
SUBURB	0.00E+00	3.36E+02	0.00E+00	5.19E+01	1.15E+02	5.28E+02	0.00E+00	1.03E+03
URBAN	0.00E+00	4.37E+02	0.00E+00	7.10E+00	9.45E+02	5.28E+02	0.00E+00	1.92E+03
TOTALS:	0.00E+00	1.32E+03	0.00E+00	6.02E+01	1.11E+03	1.74E+03	0.00E+00	4.22E+03

MAXIMUM INDIVIDUAL IN-TRANSIT DOSE

LINK 1 2.69E-02 REM
LINK 2 2.69E-02 REM
LINK 3 2.69E-02 REM

EXPECTED VALUES OF POPULATION RISK IN PERSON-REM

	GROUND	INHALED	RESUSPD	CLOUDSH	*INGESTION	TOTAL
LINK 1	1.09E+01	1.65E-01	4.66E-01	5.17E-04	0.00E+00	1.15E+01
LINK 2	2.45E+02	3.61E+00	1.02E+01	1.17E-02	0.00E+00	2.59E+02
LINK 3	2.58E+02	3.32E+00	9.37E+00	1.05E-02	0.00E+00	2.71E+02
RURAL	1.09E+01	1.65E-01	4.66E-01	5.17E-04	0.00E+00	1.15E+01
SUBURB	2.45E+02	3.61E+00	1.02E+01	1.17E-02	0.00E+00	2.59E+02
URBAN	2.58E+02	3.32E+00	9.37E+00	1.05E-02	0.00E+00	2.71E+02
TOTALS:	5.15E+02	7.09E+00	2.00E+01	2.27E-02	0.00E+00	5.42E+02

* NOTE THAT INGESTION RISK IS A SOCIETAL RISK;
THE USER MAY WISH TO TREAT THIS VALUE SEPARATELY.

Generic Environmental Impact Statement for License Renewal of Nuclear Plants: Appendices (NUREG-1437, Volume 2)

- Publication Information
- Table of Contents
- Introduction

Publication Information

Manuscript Completed: April 1996
Date Published: May 1996

Division of Regulatory Applications
Office of Nuclear Regulatory Research
U.S. Nuclear Regulatory Commission
Washington, DC 20555-0001

Availability Notice

Table of Contents

- Figures
- Acronyms and Abbreviations
- Appendix A: General Characteristics and Environmental Settings of Domestic Nuclear Power Plants
  - Arkansas Nuclear One
  - Beaver Valley Power Station
  - Bellefonte Nuclear Plant
  - Big Rock Point Nuclear Plant
  - Braidwood Station
  - Browns Ferry Nuclear Power Station
  - Brunswick Steam Electric Plant
  - Byron Station
  - Callaway Plant
  - Calvert Cliffs Nuclear Power Plant
  - Catawba Nuclear Station
  - Clinton Power Station
  - Comanche Peak Steam Electric Station
  - Donald C. Cook Nuclear Power Plant
  - Cooper Nuclear Station
  - Crystal River Nuclear Plant
  - Davis-Besse Nuclear Power Station
  - Diablo Canyon Nuclear Power Plant
  - Dresden Nuclear Power Station

- Duane Arnold Energy Center
- Joseph M. Farley Nuclear Plant
- Enrico Fermi Atomic Power Plant
- James A. Fitzpatrick Nuclear Power Plant
- Fort Calhoun Station
- Robert Emmett Ginna Nuclear Power Plant
- Grand Gulf Nuclear Station
- Haddam Neck Plant (Connecticut Yankee)
- Shearon Harris Nuclear Power Plant
- Edwin I. Hatch Nuclear Plant
- Hope Creek Generating Station
- Indian Point Station
- Kewaunee Nuclear Power Plant
- La Salle County Station
- Limerick Generating Station
- Maine Yankee Atomic Power Plant
- William B. McGuire Nuclear Station
- Millstone Nuclear Power Station
- Monticello Nuclear Generating Plant
- North Anna Power Station
- Nine Mile Point Nuclear Station
- Oconee Nuclear Station
- Oyster Creek Nuclear Generating Station
- Palisades Nuclear Plant
- Palo Verde Nuclear Generating Station
- Peach Bottom Atomic Power Station
- Perry Nuclear Power Plant
- Pilgrim Nuclear Power Station
- Point Beach Nuclear Plant
- Prairie Island Nuclear Generating Plant
- Quad-Cities Station
- Rancho Seco Nuclear Generating Station
- River Bend Station
- H. B. Robinson Plant
- Salem Nuclear Generating Station
- San Onofre Nuclear Generating Station
- Seabrook Station
- Sequoyah Nuclear Plant
- Shoreham Nuclear Power Station
- South Texas Project
- St. Lucie Plant
- Virgil C. Summer Nuclear Station
- Surry Power Station
- Susquehanna Steam Electric Station
- Three Mile Island Nuclear Station
- Trojan Nuclear Plant
- Turkey Point Plant
- Vermont Yankee Nuclear Power Station
- Vogtle Electric Generating Plant
- Washington Nuclear Project 2 (WNP-2)
- Waterford Steam Electric Station

- Watts Bar Nuclear Plant
- Wolf Creek Generating Station
- Yankee Nuclear Power Station
- Zion Nuclear Plant
- References

- Appendix B: Definition of Impact Initiators for Nuclear Plant License Renewal Generic Environmental Impact Study
  - B.1 Introduction
    - B.1.1 Purpose
    - B.1.2 Scope and Organization

  - B.2 Technical Approach and Bases
    - B.2.1 Technical Approach
    - B.2.2 Assumptions and Bases

  - B.3 Data Development
    - B.3.1 Aging Management Activities
    - B.3.2 Quantification of Impact Initiators

  - B.4 Results
    - B.4.1 BWR and PWR License Renewal Program Impact Initiators
    - B.4.2 Comparisons to Industry Costs for Plant Life Extension
    - B.4.3 Other Impacts and Considerations
    - B.4.4 Consideration of Other License Renewal Programs

  - B.5 Endnotes
  - B.6 References
  - Appendix B -- Attachment 1: Recent Industry Experience for Major Refurbishments and Estimates for Plant Life Extension Costs

- Appendix C: Socioeconomics
  - C.1 Research Methods
    - C.1.2 Review of Newspaper Citations
    - C.1.3 Survey of Utilities
    - C.1.4 Case Studies
    - C.1.5 Analysis of Impacts

  - C.2 Baseline Description
    - C.2.1 Overview of Past Population- and Tax-Driven Nuclear Plant Impacts
    - C.2.2 Overview of Current and Past Socioeconomic Characteristics for All Plants

  - C.3 Description of License Renewal
    - C.3.1 Work Force and Expenditures Required for Plant Refurbishment and the License Renewal Term
    - C.3.2 Changes in Taxable Value of the Plant and in Tax Distributions Following Refurbishment

  - C.4 Description of Case Study Sites
    - C.4.1 Arkansas Nuclear One
    - C.4.2 D. C. Cook
    - C.4.3 Diablo Canyon
    - C.4.4 Indian Point
    - C.4.5 Oconee

        - C.4.6 Three Mile Island
        - C.4.7 Wolf Creek

    - C.5 Endnotes
    - C.6 References
        - C.6.1 Printed Sources

    - C.7 Tables

- Appendix D: Aquatic Microorganisms and Human Health
    - References

- Appendix E: Radiation Protection Considerations for Nuclear Power Plant License Renewal
    - E.1 The Regulatory Standards Process
    - E.2 Radiation Protection Standards
        - E.2.1 Occupational
        - E.2.2 Public

    - E.3 Nuclear Power Plant Exposure Data
        - E.3.1 Occupational
        - E.3.2 Public

    - E.4 Risks from Radiation Exposure
        - E.4.1 Background
        - E.4.2 Risk Coefficient Selection for this Generic Environmental Impact Statement

    - E.5 Overview and Perspective
        - E.5.1 Program Costs
        - E.5.2 Risks
        - E.5.3 Standards
        - E.5.4 Conclusions

    - E.6 References
    - Attachment E.A: Concepts, Terminology, Quantities, and Units Used in the Old and New Versions of 10 CFR Part 20
        - E.A.1 Conventional Quantities and Units
        - E.A.2 New Part 20 Quantities and Units
        - E.A.3 International System of Units

    - Attachment E.B: The ICRP Dose Limitation System
        - E.B.1 Justification
        - E.B.2 Optimization
        - E.B.3 Limitation

    - Attachment E.C: Plots of Population Dose Commitments by Reactor Legend:

- Appendix F: Methodology for Assessing Impacts to Aquatic Ecology and Water Resources
    - F.1 List of Issues
    - F.2 Sources of Information
    - F.3 Analytical Approach
    - F.4 Plant-Specific Analysis
        - F.4.1 Arkansas Nuclear One
        - F.4.2 William B. McGuire Nuclear Station

    - F.4.3 D. C. Cook Nuclear Power Plant
    - F.4.4 Lake Michigan Nuclear Power Plants
    - F.4.5 Hudson River Power Plants
    - F.4.6 San Onofre Nuclear Generating Station
    - F.4.7 Crystal River Nuclear Plant
  - F.5 Summary
  - F.6 Endnotes
  - F.7 References
- Appendix G: Postulated Accidents
  - G.1 Statistical Analysis
    - G.1.1 Introduction
    - G.1.2 Regressions
    - G.1.3 Predictions
  - G.2 Endnotes
  - G.3 References
- Appendix H: Environmental Statutes and Regulations Affecting License Renewal Activities
  - H.1 Introduction
  - H.2 Federal Statutes And Executive Orders
    - H.2.1 Land Use
    - H.2.2 Water Use
    - H.2.3 Water Quality
    - H.2.4 Air Quality
    - H.2.5 Aquatic Resources
    - H.2.6 Terrestrial Resources
    - H.2.7 Radiological Impacts
    - H.2.8 Solid Waste
    - H.2.9 Chemical Impurities
    - H.2.10 Socioeconomic Factors
    - H.2.11 Other
- Appendix I: NRC Procedures for the Submission of Petitions for Rulemaking

Figures

[**Prev** | **Next** | **Top of file**]

B.1 PWR major refurbishment outage schedule

B.2 BWR major refurbishment schedule

B.3 Typical program impacts relative to corresponding conservative case impacts

B.4 Incremental labor hours

B.5 Outage average incremental on-site staff

B.6 Additional personnel required to perform conservative case pressurized-water reactor license renewal major refurbishment outage activities

B.7 Additional personnel required to perform conservative case boiling-water reactor license renewal current-term outage activities

B.8 Additional personnel required to perform typical case pressurized-water reactor license renewal current-term outage activities

B.9 Additional personnel required to perform typical case boiling-water reactor license renewal major refurbishment activities

B.10 Incremental low-level waste generated

B.11 Incremental occupational radiation exposure

B.12 Incremental waste disposal costs

B.13 Incremental capital and labor costs

B.14 Total license renewal costs

B-1.1 Outage duration and personnel exposure in seven steam generator replacement projects

C.1 Population categories, by sparseness and proximity

C.2 The seven case study nuclear plants

C.3 Conservative scenario refurbishment work force estimates (PWR)

C.4 Socioeconomic impact area associated with Arkansas Nuclear One refurbishment: Pope County

C.5 Region surrounding the Arkansas Nuclear One nuclear plant

C.6 Socioeconomic impact area associated with D. C. Cook refurbishment, including Berrien County, Lake Township, and Bridgman

C.7 Region surrounding the D. C. Cook nuclear plant

C.8 Socioeconomic impact area associated with Diablo Canyon refurbishment: San Luis Obispo County

C.9 Region surrounding the Diablo Canyon nuclear plant

C.10 Socioeconomic impact area associated with Indian Point refurbishment: Westchester and Dutchess counties

C.11 Region surrounding the Indian Point nuclear plant

C.12 Socioeconomic impact area associated with Oconee Nuclear Station refurbishment: Oconee County

C.13 Region surrounding the Oconee Nuclear Station nuclear plant

C.14 Socioeconomic impact area associated with Three Mile Island refurbishment: Middletown, Royalton, and Londonderry Township

C.15 Region surrounding the Three Mile Island nuclear plant

C.16 Socioeconomic impact area associated with Wolf Creek Generating Station refurbishment: Coffey County

C.17 Region surrounding the Wolf Creek Generating Station nuclear plant

E.C.1 Person-rem per year for Arkansas One

E.C.2 Person-rem per year for Beaver Valley

E.C.3 Person-rem per year for Big Rock Point

E.C.4 Person-rem per year for Calvert Cliffs

F.1 Example information request letter sent to state fish and wildlife resource agencies, state water pollution control agencies, and regions of the U.S. Fish and Wildlife Service, National Marine Fisheries Service, and Environmental Protection Agency.

G.1 Residuals from regression of the log of early fatality (average deaths per reactor year) on the log of 16-km (10-mile) exposure index of persons at risk.

G.2 Log plot of early fatalities per reactor year within 16 km (10 miles) of 21 nuclear power plants [3300 MW(t) or greater], resulting from postulated accidents, regressed on log of exposure index (EI) for 16 km (10 miles)

G.3 Residuals from regression of log of normalized latent fatality (average deaths per 1000-MW reactor-year) on the log of 240-km (150-mile) exposure index of persons at risk

G.4 Residuals from regression of the log of normalized total dose (rem per 1000-MW reactor-year) on the log of 240-km (150-mile) exposure index of persons at risk

G.5 Log plot of normalized latent fatalities per 1000 MW(t) per reactor year of 28 nuclear power plants resulting from postulated accidents, regressed on log of exposure index (EI) at 240 km (150 miles)

G.6 Log plot of normalized total dose in person-rem per 1000 MW(t) per reactor year within 240 km (150 miles) of 28 nuclear power plants [3300 MW(t) or greater] resulting from postulated accidents, regressed on log of exposure index (EI)

G.7 Residuals from regression of the log of normalized expected cost (dollars per 1000-MW reactor-year) on the log of 240-km (150-mile) exposure index of persons at risk

G.8 Log plot of normalized expected cost per 1000 MW(t) per reactor year of 27 nuclear power plants [3300 MW(t) or greater] resulting from postulated accidents, regressed on the log of exposure index (EI).

G.9 Log plot of early fatalities (average deaths per reactor-year) for final environmental statement pressurized-water reactor plants, fitted regression line, and 95 percent normal-theory upper prediction confidence bounds.

G.10 Log plot of early fatalities (average deaths per reactor-year) for final environmental statement boiling-water reactor plants, fitted regression line, and 95 percent normal-theory upper prediction confidence bounds

G.11 Log plot of normalized latent fatalities (average deaths per 1000-MW reactor-year) for final environmental statement pressurized-water reactor plants, fitted regression line, and 95 percent distribution-free upper prediction confidence bounds

G.12 Log plot of normalized latent fatalities (average deaths per 1000-MW reactor-year) for final environmental statement boiling-water reactor plants, fitted regression line, and 95 percent distribution-free upper prediction confidence bounds

G.13 Log plot of normalized total dose (person-rem per 1000-MW reactor-year) for final environmental statement pressurized-water reactor plants, fitted regression line, and 95 percent distribution-free upper prediction confidence bounds

G.14 Log plot of normalized total dose (person-rem per 1000-MW reactor-year) for final environmental statement boiling-water reactor plants, fitted regression line, and 95 percent distribution-free upper prediction confidence bounds

G.15 Log plot of normalized expected cost (dollars per 1000-MW reactor-year) for final environmental statement pressurized-water reactor plants, fitted regression line, and 95 percent distribution-free upper prediction confidence bounds

G.16 Log plot of normalized expected cost (dollars per 1000-MW reactor-year) for final environmental statement boiling-water reactor plants, fitted regression line, and 95 percent distribution-free upper prediction confidence bounds

G.17 Cumulative proportions of the midyear license date for 16-km (10-mile) exposure index of persons at risk for final environmental statement plants and all other plants

G.18 Cumulative proportions of the midyear license for 240-km (150-mile) exposure index of persons at risk for final environmental statement plants and all other plants

Acronyms and Abbreviations

[**Prev** | **Next** | **Top of file**]

ADS	automatic depressurization system
AEA	Atomic Energy Act of 1954
AEC	U.S. Atomic Energy Commission
AEO	*Atomic Energy Outlook 1990*
AFUDC	allowance for funds used during construction
AGA	American Gas Association
AGR	advanced gas-cooled reactor
AIRFA	American Indian Religious Freedom Act
ALARA	as low as reasonably achievable
ALI	annual limits on intake
A/m	amps per meter
AML	acute myelogenous leukemia
ANO	Arkansas Nuclear One
ANOVA	analysis of variance
ANSI	American National Standards Institute
AP&L	Arkansas Power and Light
ASME	American Society of Mechanical Engineers
ATWS	anticipated transit without scram
BAU	business-as-usual
BEIR	Biological Effects of Ionizing Radiation
BIG/GT	biomass-gasifier/gas turbine
BRC	below regulatory concern
BSD	Burlington School District
B&W	Babcock and Wilcox
BWR	boiling-water reactor

° C	degrees centigrade (Celsius)
CAA	Clean Air Act
CAAA	Clean Air Act Amendments of 1990
CCC	California Coastal Commission
CDE	committed dose equivalent
CDF	core damage frequencies
CE	Combustion Engineering
CEDE	committed effective dose equivalent
CEQ	Council on Environmental Quality
CERCLA	Comprehensive Environmental Response, Compensation, and Liability Act
CFC	chlorofluorocarbon
CFR	Code of Federal Regulations
Ci	curie
CML	chronic myelogenous leukemia
CMSA	consolidated metropolitan statistical area
CNS	central nervous system
CO	carbon monoxide
ConEd	Consolidated Edison
CPI	containment performance improvement
CPW	continuous polymer wire
CRAC	Consequence (of) Reactor Accident Code
CRD	control rod drive
CWA	Clean Water Act of 1977
CZMA	Coastal Zone Management Act
DAC	derived air concentrations
DAW	dry active waste
DE	dose equivalent
DECON	a nuclear plant decommissioning method
DER	Florida Department of Environmental Regulation
DFA	direct fluorescent antibody
DMBA	dimethylbenzanthracene
DNR	Florida Department of Natural Resources
DO	dissolved oxygen
DOE	U.S. Department of Energy
DOI	Department of Interior
DRBC	Delaware River Basin Commission
DREF	dose rate effectiveness factor
DRI	Data Resources Incorporated
DSC	dry shielded canister
DSM	demand-side management
E	electric field
EA	environmental assessment
EAB	exclusion area boundary
EDE	effective dose equivalent
EEC	European Economic Community

EEDB	Energy Economic Data Base
EEG	electroencephalogram
EEI	Edison Electric Institute
E-field	electric-field
EI	exposure index
EIA	Energy Information Administration
EIS	environmental impact statement
EKG	electrocardiogram
ELF	extremely low frequency
EM	electromagnetic
EMF	electromagnetic field
ENTOMB	a nuclear plant decommissioning method
EO	Executive Order
EPA	U.S. Environmental Protection Agency
EPACT	Energy Policy Act of 1992
EPCRA	Emergency Planning and and Community Right-to-Know Act
EPRI	Electric Power Research Institute
EPZ	emergency planning zone
ESA	Endangered Species Act
ESEERCO	Empire State Electric Energy Research Corporation
FDA	U.S. Food and Drug Administration
FEMA	U.S. Federal Emergency Management Agency
FERC	Federal Energy Regulatory Commission
FES	final environmental statement
FFCA	Federal Facilities Compliance Agreement
FIFRA	Federal Insecticide, Fungicide, and Rodenticide Act
FIS	federal interim storage
FONSI	finding of low significant impact
FPC	Florida Power Commission
FP&L	Florida Power & Light
FR	Federal Register
FSAR	final safety analysis report
FWCA	Fish and Wildlife Coordination Act
FWS	U.S. Fish and Wildlife Service
GBD	gas bubble disease
GCHWR	gas-cooled heavy-water-moderated reactor
GCR	gas-cooled reactor
GE	General Electric Company
GEIS	generic environmental impact statement
$g/m^2/s$	gallons per square meter per second
GNP	gross national product
GNSI	General Nuclear Systems, Inc.
GPU	General Public Utilities Corporation
GRI	Gas Research Institute
GTCC	greater-than-class-C
GW	gigawatt

GWd	gigawatt-days
HC	hydrocarbons
HL&P	Houston Lighting and Power Company
HLW	high-level radioactive waste
HP	health physics
HPOF	high-pressure oil-filled
HRS	hazard ranking system
HSM	horizontal storage module
HSWA	Hazardous and Solid Waste Amendments of 1984
HWR	heavy-water reactor
ICRP	International Commission on Radiological Protection
IGSCC	intergranular stress-cracking corrosion
IMP	intramembranous protein particle
INIRC	International Non-Ionizing Radiation Protection Association
INPO	Institute of Nuclear Power Operations
IOR	ion exchange resin
IPA	integrated plant assessment
IPE	individual plant examination
IRPA	International Radiation Protection Association
ISFSI	independent spent-fuel storage installation
ISI	in-service inspection
ISTM	inspection, surveillance, testing, and maintenance
kV	kilovolt
kV/m	kilovolts per meter
kW	kilowatt
kWh	kilowatt-hour
LD	Legionnaires' disease
LDR	land disposal restrictions
LDSD	Lower Dauphin School District
LET	linear energy transfer
LLRWPAA	Low-Level Radioactive Waste Policy Amendments Act of 1985
LLW	low-level radioactive waste
LMFBR	liquid-metal first breeder reactor
LOCA	loss-of-coolant accident
LOS	level of service
LPGS	Liquid Pathway Generic Study
LPZ	low population zone
LWR	light-water reactor
m	meter
mA	milliamperes
MACCS	MELCOR Accident Consequence Code System
MANOVA	multivariate analyses of covariance
MAP	Methodologies Applications Program

MASD	Middletown Area School District
mCi	milliCurie
MCLG	maximum contaminant goal levels
MDNR	Maryland Department of Natural Resources
MFD	magnetic flux density
mG	milligauss
mM	millimole
MMPA	Marine Mammals Protection Act
MPC	maximum permissible concentration
MPRSA	Marine Protection, Research, and Sanctuaries Act
MPOB	maximum permissible organ burden
MRC	Marine Review Committee
mrem	millirem
MRS	monitored retrievable storage
m^3/s	cubic meters per second
MSA	metropolitan statistical area
MSW	municipal solid waste
mT	millitesla
MTIHM	metric tons of initial heavy metal
MTU	metric tons of uranium
mV/m	millivolts per meter
MW	megawatt
MWd	megawatt-days
MW(e)	megawatt (electrical)
MW(t)	megawatt (thermal)
MYL	middle year of license
MYR	middle year of relicense
m g/g	micrograms per gram
m m	micron
NAA	nonattainment area
NAAQS	National Ambient Air Quality Standards
NAS	National Academy of Sciences
NBS	National Bureau of Standards (now NIST)
NCA	National Coal Association
NCRP	National Council on Radiation Protection and Measurements
NEC	normalized expected cost
NEPA	National Environmental Policy Act of 1969
NERC	North American Electric Reliability Council
NESC	National Electric Safety Code
NESHAP	National Emission Standards for Hazardous Air Pollutants
NGS	nuclear generating station
NHPA	National Historic Preservation Act of 1966
NIEHS	National Institute of Environmental Health Sciences
NIOSH	National Institute for Occupational Safety and Health
NIST	National Institute of Standards and Technology
NLF	normalized latent facility
NMFS	National Marine Fisheries Service

NMR	nuclear magnetic resonance
NO_x	nitrogen oxide(s)
NPA	National Planning Association
NPDES	National Pollutant Discharge Elimination System
NPP	nuclear power plant
NRC	U.S. Nuclear Regulatory Commission
NSPS	new source performance standards
NSSS	nuclear steam supply system
NTD	normalized total dose
NUHOMS	Nutech Horizontal Modular System
NUMARC	Nuclear Utilities Management and Resources Council
NUREG	an NRC reports category
NUS	NUS Corporation
NWPA	Nuclear Waste Policy Act of 1982
NYSDEC	New York State Department of Environmental Conservation
ODC	ornithine decarboxylase
OHMS	hydroxy melatonin sulfate
OL	operating license
O&M	operation and maintenance
ONS	Oconee Nuclear Station
OPEC	Organization of Petroleum Exporting Countries
OR	odds ratio
ORNL	Oak Ridge National Laboratory
OSHA	Occupational Safety and Health Administration
OTA	Office of Technology Assessment
OTEC	ocean thermal energy conversion
PAME	primary amoebic meningoencephalitis
PASNY	Power Authority for the State of New York
PCB	polychlorinated biphenyl
PG&E	Pacific Gas and Electric
pH	hydrogen-ion concentration
PHWR	pressurized heavy-water reactor
PLEX	plant life extension
PM	particulate matter
PMR	proportionate mortality ratios
ppm	parts per million
PSD	prevention of significant deterioration
PRA	probabilistic risk assessment
PTH	parathyroid hormone
PURPA	Public Utility Regulatory Policies Act of 1978
PURTA	Public Utilities Realty Tax Assessment of 1970
PV	solar photovoltaic
PWR	pressurized-water reactor
QA	quality assurance

RBE	relative biological effectiveness
RCB	reactor containment building
RCRA	Resource Conservation and Recovery Act of 1976
RD&D	1. research, design, and development
	2. research, development, and demonstration
RERF	Radiation Effects Research Council
RET	renewable energy technology
RF	radio frequency
RHR	residual heat removal
RIMS	Regional Industrial Multiplier System
rms	root mean square
ROW	right(s) of way
RPV	reactor pressure vessel
RRY	reference reactor year
RSD	Russellville (Ark.) School District
RSS	Reactor Safety Study
RV	recreational vehicle
RY	reactor-year
SAFSTOR	a nuclear plant decommissioning method
SAMDA	severe accident mitigation design alternative
SAND	Data Resource Incorporated's detailed electricity sector model
SAND NUPLEX	SAND generating capacity projections
SAR	safety analysis report
SARA	Superfund Amendments and Reauthorization Act
SCE	Southern California Edison
SCM	Surface Compartment Model
SDG&E	San Diego Gas & Electric Company
SDWA	Safe Drinking Water Act
SEA	Science and Engineering Associates, Inc.
SER	safety evaluation report
SERI	Solar Energy Research Institute
SEV	state equalized value
SF	spent fuel
SHPO	state historic preservation office
SI	International System
SIR	standardized incidence ratio
SLB	shallow land burial
SMR	standardized mortality ratio
SMITTR	surveillance, on-line monitoring, inspections, testing, trending, and recordkeeping
SMSA	standard metropolitan statistical area
SO_2	sulfur dioxide
SOK	San Onofre kelp bed
SONGS	San Onofre Nuclear Generating Station
SRBC	Susquehanna River Basin Commission
SSC	systems, structures, and components
t	metric tons

TDE	total dose equivalent
TDS	total dissolved solids
TEDE	total effective dose equivalent
TMI	Three Mile Island (nuclear plant)
TRU	transuranic
TSCA	Toxic Substances Control Act
TVA	Tennessee Valley Authority
UCB	upper confidence bound
UFC	uranium fuel cycle
UHV	ultra-high voltage
UNSCEAR	United Nations Scientific Committee on the Effects of Atomic Radiation
USD	Unified School District
USGS	U.S. Geological Survey
USI	unresolved safety issue
VDT	video display terminal
VR	volume reduction
VRF	volume reduction factor
W	watt
WCGS	Wolf Creek Generating Station
WHO	World Health Organization
WNP-2	Washington Nuclear Project
WTE®	Whole Tree Energy®

Appendix A: General Characteristics and Environmental Settings of Domestic Nuclear Power Plants

[**Prev** | **Next** | **Top of file**]

This section contains brief descriptions of each nuclear power plant site in the United States. The information was compiled from: (1) the plant safety analysis reports (SARs), (2) the Nuclear Regulatory Commission "Gray Book" (NUREG-0020), (3) site environmental reports, (4) environmental impact statements, (5) environmental assessments used to check data for cooling water system and site information, and (6) WASH-1319 used for selected data. Specific data that could not be found in these six sources were obtained from ORNL-NSIC-55.

Specific data sources are listed on the following page.

Source for General Information

Plant Name: SAR

Location: County and distance and direction from nearest town or city: NUREG-0020

Latitude and longitude: List provided by R. Rush, ORNL

Licensee: Utility as listed in NUREG-0020

Source for Information on Unit

Docket Number: NUREG-0020

Construction Permit: Nuclear Safety Journal, Power Reactor Licensing Activity

Operating License: Table A.1 of SECY-90-160 (NUREG-0020)

Commercial Operation: NUREG-0020

License Expiration: Table A.1 of SECY-90-160 (NUREG-0020)

Licensed Thermal Power [MW(t)]: NUREG-0020

Design Electrical Rating [net MW(e)]: NUREG-0020

Type of Reactor: NUREG-0020

Nuclear Steam Supply System Vendor: NUREG-0020

Source for Information on Cooling Water System

Type: SAR, NUREG-0020

Source: NUREG-0020

Source Temperature Range: SAR, ORNL-NSIC-55

Condenser Flow Rate: SAR, ORNL-NSIC-55

Design Condenser Temperature Rise: SAR, ORNL-NSIC-55

Intake Structure: SAR

Discharge Structure: SAR

Source for Information on Site

Total Area: SAR, WASH-1319

Exclusion Distance: SAR

Low Population Zone: SAR

Nearest City: SAR; 1980 population:*

Site Topography: SAR

Surrounding Area Topography: SAR

Land Use within 8 km (5 miles): SAR

Nearby Features: SAR

Area of Transmission Line Corridor: WASH-1319

Population within an 80-km (50-mile) radius:*

*Population data are taken from population projections developed for NRC by MITRE Corporation and made available to GEIS project.

Arkansas Nuclear One

[**Prev** | **Next** | **Top of file**]

Location:

Pope County, Arkansas

10 km (6 miles) WNW of Russellville

latitude 35.3100°N; longitude 93.2308°W

Licensee: Arkansas Power and Light Co.

Unit Information	Unit 1	Unit 2
Docket Number	50-313	50- 368
Construction Permit	1968	1972
Operating License	1974	1978
Commercial Operation	1974	1980
License Expiration	2014	2018
Licensed Thermal Power [MW(t)]	2568	2815
Design Electrical Rating [net MW(e)]	850	912
Type of Reactor	PWR	PWR
Nuclear Steam Supply System Vendor	B&W	CE

Cooling Water System

Type: Unit 1, once through

Source: Dardanelle Reservoir Unit 2, natural draft cooling tower

Source Temperature Range: 4-28°C (40-83°F)

Condenser Flow Rate:

48.3 m3/s (765,000 gal/min) for Unit 1

26.6 m3/s (422,000 gal/min) for Unit 2

Design Condenser Temperature Rise:

8.3°C (15°F) for Unit 1

17.1°C (30.7°F) for Unit 2

Intake Structure: 981-m (3220-ft) canal

Discharge Structure: 160-m (520-ft) canal

Site Information

Total Area: 469 ha (1160 acres)

Exclusion Distance: 1.05-km (0.65-mile) radius

Low Population Zone: 6.44-km (4.00-mile) radius

Nearest City: Little Rock; 1980 population: 159,159

Site Topography: flat

Surrounding Area Topography: hilly to mountainous

Land Use within 8 km (5 miles): wooded

Nearby Features:

The nearest town is Mill Creek 3 km (2 miles) NE. The size of the Dardanelle Reservoir is 15,000 ha (37,000 acres). The reservoir is part of the Arkansas River. The Missouri Pacific Railroad and U.S. Highway I-40 are just N of the site.

Area of Transmission Line Corridor: 1500 ha (3700 acres)

Population within an 80-km (50-mile) radius:

1990	2000	2010	2030	2050
200,000	210,000	220,000	250,000	270,000

Beaver Valley Power Station

[**Prev** | **Next** | **Top of file**]

Location:

Beaver County, Pennsylvania

40 km (25 miles) NW of Pittsburgh

latitude 40.6219°N; longitude 80.4339°W

Licensee: Duquesne Light Co.

Unit Information	Unit 1	Unit 2
Docket Number	50-334	50-412
Construction Permit	1970	1974
Operating License	1976	1987
Commercial Operation	1976	1987
License Expiration	2016	2027
Licensed Thermal Power [MW(t)]	2652	2652
Design Electrical Rating [net MW(e)]	835	836
Type of Reactor	PWR	PWR
Nuclear Steam Supply System Vendor	WEST	WEST

Cooling Water System

Type: natural draft cooling towers

Source: Ohio River

Source Temperature Range: 1.1-28°C (34-83°F)

Condenser Flow Rate: 30.31 m3/s (480,400 gal/min) each unit

Design Condenser Temperature Rise: 14°C (26°F)

Intake Structure: concrete structure at river edge

Discharge Structure: at river edge

Site Information

Total Area: 203 ha (501 acres)

Exclusion Distance: 0.45 km (0.28 mile)

Low Population Zone: 5.79 km (3.60 miles)

Nearest City: Pittsburgh; 1980 population: 423,959

Site Topography: flat

Surrounding Area Topography: hilly

Land Use within 8 km (5 miles): industrial and residential

Nearby Features:

The nearest town is Midland 1.6 km (1 mile) NW. A large industrial area is about 1.6 km (1 mile) WNW. The Penn Central Railroad is adjacent to the site. Beaver Creek and

Raccoon Creek State Parks are within 16 km (10 miles).

Area of Transmission Line Corridor: uses existing corridor

Population within an 80-km (50-mile) radius:

1990	2000	2010	2030	2050
3,740,000	3,840,000	3,910,000	4,040,000	4,170,000

Bellefonte Nuclear Plant

[**Prev** | **Next** | **Top of file**]

Location:

Jackson County, Alabama

11 km (7 miles) ENE of Scottsboro

latitude 34.7089°N; longitude 85.9275°W

Licensee: Tennessee Valley Authority

Unit Information	Unit 1	Unit 2
Docket Number	50-438	50-439
Construction Permit	1974	1974
Operating License	--	--
Commercial Operation	--	--
License Expiration	--	--
Design Thermal Power [MW(t)]	3760	3760
Design Electrical Rating [net MW(e)]	1213	1213
Type of Reactor	PWR	PWR
Nuclear Steam Supply System Vendor	B&W	B&W

Cooling Water System

Type: natural draft cooling towers

Source: Guntersville Lake

Source Temperature Range: 5-27°C (41-81°F)

Condenser Flow Rate: 26 m3/s (410,000 gal/min) each unit

Design Condenser Temperature Rise: 20°C (36°F)

Intake Structure: intake channel

Discharge Structure: submerged multi-port diffuser

Site Information

Total Area: 610 ha (1500 acres)

Exclusion Distance: 0.92-km (0.57-mile) minimum

Low Population Zone: 3.22 km (2.00 miles)

Nearest City: Huntsville; 1980 population: 142,513

Site Topography: flat valley

Surrounding Area Topography: hilly out of valley

Land Use within 8 km (5 miles): agricultural and wooded

Nearby Features:

The nearest town is Hollywood 5 km (3 miles) WNW. The Widows Creek coal-fired plant is 24 km (15 miles) NE. Guntersville Lake is on the Tennessee River.

Area of Transmission Line Corridor: 1200 ha (2900 acres)

Population within an 80-km (50-mile) radius:

1990	2000	2010	2030	2050
1,070,000	1,150,000	1,230,000	1,340,000	1,470,000

Big Rock Point Nuclear Plant

[**Prev** | **Next** | **Top of file**]

Location:

Charlevoix County, Michigan

6 km (4 miles) NE of Charlevoix

latitude 45.3592°N; longitude 85.1947°W

Licensee: Consumers Power Co.

Unit Information	Unit 1
Docket Number	50-155
Construction Permit	1960
Operating License	1962
Commercial Operation	1963
License Expiration	2002
Licensed Thermal Power [MW(t]	240
Design Electrical Rating [net MW(e)]	72
Type of Reactor	BWR
Nuclear Steam Supply System Vendor	GE

Cooling Water System

Type: once through

Source: Lake Michigan

Source Temperature Range: 3-20°C (38-68°F)

Condenser Flow Rate: 3.1 m3/s (49,000 gal/min)

Design Condenser Temperature Rise: 11°C (20°F)

Intake Structure: underwater crib

Discharge Structure: open discharge canal

Site Information

Total Area: 240 ha (600 acres)

Exclusion Distance: 0.82 km (0.51 mile)

Low Population Zone: 4.02 km (2.50 miles)

Nearest City: Sault Ste. Marie, Canada; 1980 population: 81,048

Site Topography: gently sloping

Surrounding Area Topography: gently sloping

Land Use within 8 km (5 miles): commercial and industrial

Nearby Features:

The nearest town is Charlevoix 6 km (4 miles) SW. The C&O Railroad is about 1.6 km (1 mile) SE. Lake Charlevoix is 5 km (3 miles) S.

Area of Transmission Line Corridor:

Population within an 80-km (50-mile) radius:

1990	2000	2010	2030	2050
200,000	210,000	210,000	230,000	240,000

Braidwood Station

[**Prev** | **Next** | **Top of file**]

Location:

Will County, Illinois

39 km (24 miles) SSW of Joliet

latitude 41.2436°N; longitude 88.2297°W

Licensee: Commonwealth Edison Co.

Unit Information	Unit 1	Unit 2
Docket Number	50-456	50- 457
Construction Permit	1975	1975
Operating License	1987	1988
Commercial Operation	1988	1988
License Expiration	2027	2028
Licensed Thermal Power [MW(t)]	3411	3411
Design Electrical Rating [net MW(e)]	1120	1120
Type of Reactor	PWR	PWR
Nuclear Steam Supply System Vendor	WEST	WEST

Cooling Water System

Type: closed cycle cooling pond

Source: Kankakee River

Source Temperature Range: 0-31°C (32-87°F)

Condenser Flow Rate: 46.05 m3/s (729,800 gal/min) each unit

Design Condenser Temperature Rise: 12°C (21°F)

Intake Structure: concrete structure at lake shore

Discharge Structure: surface discharge flume to lake

Site Information

Total Area: 1804 ha (4457 acres)

Exclusion Distance: 0.48-km (0.30-mile) minimum

Low Population Zone: 1.810 km (1.125 mile) radius

Nearest City: Joliet; 1980 population: 77,956

Site Topography: flat to rolling

Surrounding Area Topography: flat to rolling

Land Use within 8 km (5 miles): agricultural

Nearby Features:

The nearest town is Godley 0.8 km (0.5 mile) SW. There are 4 state parks within 16 km (10 miles). Joliet Arsenal is about 13 km (8 miles) NE. Dresden Nuclear Power Station is about 16 km (10 miles) N and La Salle County Station (nuclear) is about 32 km (20 miles) WSW. The Illinois Central Gulf Railroad is just NW. U.S. Highway I-55 is about 3 km (2 miles) NW.

Area of Transmission Line Corridor: 961.5 ha (2376 acres)

Population within an 80-km (50-mile) radius:

1990	2000	2010	2030	2050
4,510,000	4,650,000	4,750,000	4,920,000	5,090,000

Browns Ferry Nuclear Power Station

[**Prev** | **Next** | **Top of file**]

Location:

Limestone County, Alabama

16 km (10 miles) NW of Decatur

latitude 34.7042°N; longitude 87.1186°W

Licensee: Tennessee Valley Authority

Unit Information	Unit 1	Unit 2	Unit 3
Docket Number	50-259	50- 260	50-296
Construction Permit	1967	1967	1968
Operating License	1973	1974	1976
Commercial Operation	1974	1975	1977
License Expiration	2013	2014	2016

Licensed Thermal Power [MW(t)]	3293	3293	3293
Design Electrical Rating [net MW(e)]	1065	1065	1065
Type of Reactor	BWR	BWR	BWR
Nuclear Steam Supply System Vendor	GE	GE	GE

Cooling Water System

Type: once through and helper towers

Source: Tennessee River

Source Temperature Range: 4-32°C (40-90°F)

Condenser Flow Rate: 40 m3/s (630,000 gal/min) each unit

Design Condenser Temperature Rise: 14°C (25°F)

Intake Structure: concrete structure in small inlet

Discharge Structure: diffuser pipes

Site Information

Total Area: 340 ha (840 acres)

Exclusion Distance: 1.22-km (0.76-mile) radius

Low Population Zone: 11.3 km (7.00 miles)

Nearest City: Huntsville; 1980 population: 142,513

Site Topography: flat

Surrounding Area Topography: flat to rolling

Land Use within 8 km (5 miles): agricultural

Nearby Features:

The nearest town is Lawngate 1.6 km (1 mile) NE. The Redstone Arsenal is 40 km (25 miles) E. The Southern Railroad is 10 km (6 miles) S and the Louisville and Nashville Railroad is 10 km (6 miles) E.

Area of Transmission Line Corridor: 546 ha (1350 acres)

Population within an 80-km (50-mile) radius:

1990	2000	2010	2030	2050
760,000	810,000	850,000	930,000	1,010,000

Brunswick Steam Electric Plant

[**Prev** | **Next** | **Top of file**]

Location:

Brunswick County, North Carolina

26 km (16 miles) S of Wilmington

latitude 33.9583°N; longitude 78.0106°W

Licensee: Carolina Power and Light Co.

Unit Information	Unit 1	Unit 2
Docket Number	50-325	50- 324
Construction Permit	1967	1968
Operating License	1976	1974
Commercial Operation	1977	1975
License Expiration	2016	2014
Licensed Thermal Power [MW(t)]	2436	2436
Design Electrical Rating [net MW(e)]	821	821
Type of Reactor	BWR	BWR
Nuclear Steam Supply System Vendor	GE	GE

Cooling Water System

Type: once through

Source: Cape Fear River

Source Temperature Range: 4-30°C (40-86°F)

Condenser Flow Rate: 42.6 m3/s (675,000 gal/min) each unit

Design Condenser Temperature Rise: 9°C (17°F)

Intake Structure: 5-km (3-mile) canal from Cape Fear River

Discharge Structure: 10-km (6-mile) canal to Atlantic Ocean

Site Information

Total Area: 490 ha (1200 acres)

Exclusion Distance: 0.92 km (0.57 mile)

Low Population Zone: 3.22 km (2.00 miles)

Nearest City: Wilmington; 1980 population: 44,000

Site Topography: flat

Surrounding Area Topography: flat

Land Use within 8 km (5 miles): less than one-half agricultural, remainder swamps or wooded

Nearby Features:

Nearest town is Southport 5 km (3 miles) S. Sunny Point Military Ocean Terminal is about 8 km (5 miles) N.

Area of Transmission Line Corridor: 1400 ha (3500 acres)

Population within an 80-km (50-mile) radius:

1990	2000	2010	2030	2050
230,000	250,000	270,000	300,000	340,000

Byron Station

[**Prev** | **Next** | **Top of file**]

Location:

Ogle County, Illinois

27 km (17 miles) SW of Rockford

latitude 42.0750°N; longitude 89.2811°W

Licensee: Commonwealth Edison Co.

Unit Information	Unit 1	Unit 2
Docket Number	50-454	50- 455
Construction Permit	1975	1975
Operating License	1985	1987
Commercial Operation	1985	1987
License Expiration	2025	2027
Licensed Thermal Power [MW(t)]	3411	3411
Design Electrical Rating [net MW(e)]	1120	1120
Type of Reactor	PWR	PWR
Nuclear Steam Supply System Vendor	WEST	WEST

Cooling Water System

Type: natural draft cooling towers

Source: Rock River

Source Temperature Range:

Condenser Flow Rate: 39.9 m3/s (632,000 gal/min) each unit

Design Condenser Temperature Rise: 13°C (24°F)

Intake Structure: concrete structure on river bank

Discharge Structure: discharged to river

Site Information

Total Area: 565.8 ha (1398 acres)

Exclusion Distance: 0.42-km (0.26-mile) minimum

Low Population Zone: 4.83 km (3.00 miles)

Nearest City: Rockford; 1980 population: 139,712

Site Topography: rolling

Surrounding Area Topography: rolling

Land Use within 8 km (5 miles): agricultural

Nearby Features:

The nearest town is Byron about 5 km (3 miles) NNE. The Chicago Milwaukee and the St. Paul and Pacific Railroads are about 6 km (4 miles) NNE. White Pines State Park is about 18 km (11 miles) WSW.

Area of Transmission Line Corridor: 800 ha (2000 acres)

Population within an 80-km (50-mile) radius:

1990	2000	2010	2030	2050
1,000,000	1,030,000	1,060,000	1,100,000	1,100,000

Callaway Plant

[**Prev** | **Next** | **Top of file**]

Location:

Callaway County, Missouri

16 km (10 miles) SE of Fulton

latitude 38.7622°N; longitude 91.7817°W

Licensee: Union Electric Co.

Unit Information	Unit 1
Docket Number	50-483
Construction Permit	1976
Operating License	1984
Commercial Operation	1984
License Expiration	2024
Licensed Thermal Power [MW(t)]	3565
Design Electrical Rating [net MW(e)]	1171
Type of Reactor	PWR
Nuclear Steam Supply System Vendor	WEST

Cooling Water System

Type: natural draft cooling tower

Source: Missouri River

Source Temperature Range:

Condenser Flow Rate: 33 m3/s (530,000 gal/min)

Design Condenser Temperature Rise: 17°C (30°F)

Intake Structure: intake from river

Discharge Structure: discharged to river

Site Information

Total Area: 1290 ha (3188 acres)

Exclusion Distance: 1.21-km (0.75-mile) radius

Low Population Zone: 4.02 ha (2.50 miles)

Nearest City: Columbia; 1980 population: 62,061

Site Topography: flat, on a small plateau

Surrounding Area Topography: rolling to hilly

Land Use within 8 km (5 miles): wooded, agricultural, and pasture

Nearby Features:

The nearest town is Portland 8 km (5 miles) SE. The Missouri River is about 8 km (5 miles) S. The Missouri, Kansas, and Texas Railroad is about 5 km (3 miles) S and the Missouri Pacific Railroad is about 10 km (6 miles) S. U.S. Highway I-70 is about 16 km (10 miles) N.

Area of Transmission Line Corridor: 461 ha (1140 acres)

Population within an 80-km (50-mile) radius:

1990	2000	2010	2030	2050
400,000	420,000	430,000	460,000	500,000

Calvert Cliffs Nuclear Power Plant

[**Prev** | **Next** | **Top of file**]

Location:

Calvert County, Maryland

56 km (35 miles) S of Annapolis

latitude 38.4347°N; longitude 76.4419°W

Licensee: Baltimore Gas and Electric Co.

Unit Information	Unit 1	Unit 2
Docket Number	50-317	50- 318

Construction Permit	1969	1969
Operating License	1974	1976
Commercial Operation	1975	1977
License Expiration	2014	2016
Licensed Thermal Power [MW(t)]	2700	2700
Design Electrical Rating [net MW(e)]	845	845
Type of Reactor	PWR	PWR
Nuclear Steam Supply System Vendor	CE	CE

Cooling Water System

Type: once through

Source: Chesapeake Bay

Source Temperature Range: 1-31°C (34-87°F)

Condenser Flow Rate: 76 m3/s (1,200,000 gal/min) each unit

Design Condenser Temperature Rise: 6°C (10°F)

Intake Structure: about 170 m (560 ft) from shore

Discharge Structure: about 260 m (850 ft) from shore

Site Information

Total Area: 459 ha (1135 acres)

Exclusion Distance: 1.08-km (0.67-mile) radius

Low Population Zone:

Nearest City: Washington, D.C.; 1980 population: 638,432

Site Topography: rolling

Surrounding Area Topography: rolling

Land Use within 8 km (5 miles): agricultural and wooded

Nearby Features:

The nearest town is Long Beach 1.6 km (1 mile) NNW. Calvert Cliffs State Park is about 6 km (4 miles) SSE. A naval ordnance facility is 11 km (7 miles) SSW. Washington, D.C., is 72 km (45 miles) NW.

Area of Transmission Line Corridor: 805 ha (1990 acres)

Population within an 80-km (50-mile) radius:

1990	2000	2010	2030	2050
3,030,000	3,140,000	3,260,000	3,480,000	3,720,000

Catawba Nuclear Station

Location:

York County, South Carolina

10 km (6 miles) NNW of Rock Hill

latitude 35.0514°N; longitude 81.0708°W

Licensee: Duke Power Co.

Unit Information	Unit 1	Unit 2
Docket Number	50-413	50- 414
Construction Permit	1975	1975
Operating License	1985	1986
Commercial Operation	1985	1986
License Expiration	2025	2026
Licensed Thermal Power [MW(t)]	3411	3411
Design Electrical Rating [net MW(e)]	1145	1145
Type of Reactor	PWR	PWR
Nuclear Steam Supply System Vendor	WEST	WEST

Cooling Water System

Type: mechanical draft cooling towers

Source: Lake Wylie

Source Temperature Range: 6-28°C (43-83°F)

Condenser Flow Rate: 42 m3/s (660,000 gal/min) each unit

Design Condenser Temperature Rise: 13°C (24°F)

Intake Structure: skimmer wall on cove of the lake

Discharge Structure: on another cove of the lake

Site Information

Total Area: 158 ha (391 acres)

Exclusion Distance: 0.76-km (0.47-mile) radius

Low Population Zone: 6.12-km (3.80-mile) radius

Nearest City: Charlotte, North Carolina; 1980 population: 315,474

Site Topography: rolling

Surrounding Area Topography: rolling

Land Use within 8 km (5 miles): wooded with recreational and permanent homes along the lake

Nearby Features:

The nearest town is Rock Hill 10 km (6 miles) SSE. U.S. Highway I-77 is about 10 km (6 miles) E and I-85 is about 27 km (17 miles) N. The Southern Railway is 8 km (5 miles) S.

Area of Transmission Line Corridor: 236 ha (584 acres)

Population within an 80-km (50-mile) radius:

1990	2000	2010	2030	2050
1,590,000	1,730,000	1,860,000	2,090,000	2,340,000

Clinton Power Station

[**Prev** | **Next** | **Top of file**]

Location:

De Witt County, Illinois

10 km (6 miles) E of Clinton

latitude 40.1731°N; longitude 88.8342°W

Licensee: Illinois Power Co.

Unit Information	Unit 1
Docket Number	50-461
Construction Permit	1976
Operating License	1987
Commercial Operation	1987
License Expiration	2027
Licensed Thermal Power [MW(t)]	2894
Design Electrical Rating [net MW(e)]	933
Type of Reactor	BWR
Nuclear Steam Supply System Vendor	GE

Cooling Water System

Type: once through

Source: Salt Creek

Source Temperature Range: 0-28°C (32-83°F)

Condenser Flow Rate: 35.8850 m3/s (568,701 gal/min)

Design Condenser Temperature Rise: 13°C (23°F)

Intake Structure: concrete structure at shoreline of North Fork Salt Creek

Discharge Structure: 5-km (3-mile) flume discharging to Salt Creek

Site Information

Total Area: 5702 ha (14,090 acres)

Exclusion Distance: 0.97-km (0.60-mile) radius

Low Population Zone: 4.02-km (2.50-mile) radius

Nearest City: Decatur; 1980 population: 93,939

Site Topography: flat

Surrounding Area Topography: flat

Land Use within 8 km (5 miles): agricultural

Nearby Features:

The nearest town is De Witt 3 km (2 miles) ENE. Weldon Springs State Park is 10 km (6 miles) SW. The Illinois Central Gulf Railroad crosses the site. U.S. Highway I-74 is 18 km (11 miles) NE. A dam on Salt Creek near the site creates the reservoir for the cooling water system.

Area of Transmission Line Corridor: 367 ha (906 acres)

Population within an 80-km (50-mile) radius:

1990	2000	2010	2030	2050
730,000	770,000	790,000	830,000	870,000

Comanche Peak Steam Electric Station

[**Prev** | **Next** | **Top of file**]

Location:

Somervell County, Texas

64 km (40 miles) SW of Fort Worth

latitude 32.2983°N; longitude 97.7856°W

Licensee: Texas Utilities Electric Co.

Unit Information	Unit 1	Unit 2
Docket Number	50-445	50- 446
Construction Permit	1974	1974
Operating License	1990	1993
Commercial Operation	1990	1993
License Expiration	2030	2033
Design Thermal Power [MW(t)]	3411	3411
Design Electrical Rating [net MW(e)]	1150	1150
Type of Reactor	PWR	PWR
Nuclear Steam Supply System Vendor	WEST	WEST

Cooling Water System

Type: once through

Source: Squaw Creek Reservoir

Source Temperature Range:

Condenser Flow Rate: 65 m3/s (1,030,000 gal/min) each unit

Design Condenser Temperature Rise: 8°C (15°F)

Intake Structure: on shore of reservoir

Discharge Structure: canal to reservoir

Site Information

Total Area: 3104 ha (7669 acres)

Exclusion Distance: 1.54-km (0.96-mile) minimum

Low Population Zone: 6.44-km (4.00-mile) radius

Nearest City: Fort Worth; 1980 population: 385,164

Site Topography: flat with hills rising from the reservoir

Surrounding Area Topography: rolling to hilly

Land Use within 8 km (5 miles): agricultural, farm/ranch land, and range land

Nearby Features:

The nearest town is Glen Rose 8 km (5 miles) SSE. Dinosaur Valley State Park is 8 km (5 miles) SW. A 66-cm (26-inch) oil pipeline is very near the site and a 91-cm (36-inch) natural gas line is about 3 km (2 miles) from the site.

Area of Transmission Line Corridor: 185 ha (458 acres)

Population within an 80-km (50-mile) radius:

1990	2000	2010	2030	2050
1,130,000	1,310,000	1,460,000	1,650,000	1,880,000

Donald C. Cook Nuclear Power Plant

[**Prev** | **Next** | **Top of file**]

Location:

Berrien County, Michigan

16 km (10 miles) S of St. Joseph

latitude 41.9761°N; longitude 86.5664°W

Licensee: Indiana and Michigan Electric Co.

Unit Information	Unit 1	Unit 2
Docket Number	50-315	50- 316
Construction Permit	1969	1969
Operating License	1974	1977
Commercial Operation	1975	1978
License Expiration	2014	2017
Licensed Thermal Power [MW(t)]	3250	3411
Design Electrical Rating [net MW(e)]	1030	1100
Type of Reactor	PWR	PWR
Nuclear Steam Supply System Vendor	WEST	WEST

Cooling Water System

Type: once through

Source: Lake Michigan

Source Temperature Range: 1-23°C (34-74°F)

Condenser Flow Rate: 50 m3/s (800,000 gal/min) each unit

Design Condenser Temperature Rise: 12°C (21°F)

Intake Structure: intake cribs 686 m (2250 ft) from shore

Discharge Structure: 381 m (1250 ft) from shore

Site Information

Total Area: 260 ha (650 acres)

Exclusion Distance: 0.61 km (0.38 mile)

Low Population Zone: 3.22 km (2.00 miles)

Nearest City: South Bend, Indiana; 1980 population: 109,727

Site Topography: rolling

Surrounding Area Topography: flat to rolling

Land Use within 8 km (5 miles): agricultural and wooded

Nearby Features:

The nearest town is Livingston 1.6 km (1 mile) SW. The Chesapeake and Ohio Railroad and U.S. Highway I-94 are just E of the site. Warren Dunes State Park is about 8 km (5 miles) SSW.

Area of Transmission Line Corridor: 1340 ha (3300 acres)

Population within an 80-km (50-mile) radius:

1990	2000	2010	2030	2050
1,250,000	1,310,000	1,350,000	1,440,000	1,530,000

Cooper Nuclear Station

[**Prev** | **Next** | **Top of file**]

Location:

Nemaha County, Nebraska

37 km (23 miles) S of Nebraska City

latitude 40.3619°N; longitude 95.6411°W

Licensee: Nebraska Public Power District

Unit Information	Unit 1
Docket Number	50-298
Construction Permit	1968
Operating License	1974
Commercial Operation	1974
License Expiration	2014
Licensed Thermal Power [MW(t)]	2381
Design Electrical Rating [net MW(e)]	778
Type of Reactor	BWR
Nuclear Steam Supply System Vendor	GE

Cooling Water System

Type: once through

Source: Missouri River

Source Temperature Range: 1-23°C (34-73°F)

Condenser Flow Rate: 39.8 m3/s (631,000 gal/min)

Design Condenser Temperature Rise: 10°C (18°F)

Intake Structure: at shoreline

Discharge Structure: at shoreline

Site Information

Total Area: 441 ha (1090 acres)

Exclusion Distance: 1.09 (0.68 mile)

Low Population Zone: 1.61-km (1.00-mile) radius

Nearest City: Lincoln; 1980 population: 171,932

Site Topography: flat

Surrounding Area Topography: flat

Land Use within 8 km (5 miles): agricultural

Nearby Features:

The nearest town is Nemaha about 1.6 km (1 mile) S. A railroad runs just W of the site. Indian Cave State Park is about 13 km (8 miles) SSE.

Area of Transmission Line Corridor: 2777 ha (6862 acres)

Population within an 80-km (50-mile) radius:

1990	2000	2010	2030	2050
180,000	190,000	200,000	220,000	230,000

Crystal River Nuclear Plant

[**Prev** | **Next** | **Top of file**]

Location:

Citrus County, Florida

11 km (7 miles) NW of Crystal River

latitude 28.9572°N; longitude 82.6989°W

Licensee: Florida Power Corp.

Unit Information	Unit 3
Docket Number	50-302
Construction Permit	1968
Operating License	1977
Commercial Operation	1977
License Expiration	2017
Licensed Thermal Power [MW(t)]	2544
Design Electrical Rating [net MW(e)]	825
Type of Reactor	PWR
Nuclear Steam Supply System Vendor	B&W

Cooling Water System

Type: once through

Source: Gulf of Mexico

Source Temperature Range: 31°C (87°F) maximum

Condenser Flow Rate: 43 m3/s (680,000 gal/min)

Design Condenser Temperature Rise: 9.5°C (17.1°F)

Intake Structure: 4900 m (16,000 ft) from shoreline

Discharge Structure: 4000-m (13,000-ft) canal

Site Information

Total Area: 1917 ha (4738 acres)

Exclusion Distance: 1.34-km (0.83-mile) radius

Low Population Zone: 8.05 km (5.00 miles)

Nearest City: Gainesville; 1980 population: 81,371

Site Topography: swamps and marshland

Surrounding Area Topography: flat

Land Use within 8 km (5 miles): wooded and pasture land

Nearby Features:

The nearest town is Crystal River about 11 km (7 miles) SE. Units 1 and 2 are coal-fired plants and share a common intake and discharge with the nuclear unit.

Area of Transmission Line Corridor: 866 ha (2140 acres)

Population within an 80-km (50-mile) radius:

1990	2000	2010	2030	2050
440,000	490,000	550,000	660,000	790,000

Davis-Besse Nuclear Power Station

[**Prev** | **Next** | **Top of file**]

Location:

Ottawa County, Ohio

34 km (21 miles) E of Toledo

latitude 41.5972°N; longitude 83.0864°W

Licensee: Toledo Edison Co.

Unit Information	Unit 1
Docket Number	50-346
Construction Permit	1971
Operating License	1977
Commercial Operation	1978
License Expiration	2017
Licensed Thermal Power [MW(t)]	2772
Design Electrical Rating [net MW(e)]	906
Type of Reactor	PWR
Nuclear Steam Supply System Vendor	B&W

Cooling Water System

Type: natural draft cooling tower

Source: Lake Erie

Source Temperature Range: 1-23°C (34-74°F)

Condenser Flow Rate: 30 m3/s (480,000 gal/min)

Design Condenser Temperature Rise: 14°C (26°F)

Intake Structure: submerged intake about 900 m (3000 ft) offshore

Discharge Structure: submerged discharge about 280 m (930 ft) offshore

Site Information

Total Area: 386 ha (954 acres)

Exclusion Distance: 0.72-km (0.45-mile) radius

Low Population Zone: 3.22 km (2.00 miles)

Nearest City: Toledo; 1980 population: 354,635

Site Topography: flat

Surrounding Area Topography: flat

Land Use within 8 km (5 miles): agricultural with marshland around site

Nearby Features:

The nearest town is Oak Harbor about 10 km (6 miles) SW. Several wildlife refuge areas are within 8 km (5 miles) of the site.

Area of Transmission Line Corridor: 730 ha (1800 acres)

Population within an 80-km (50-mile) radius:

1990	2000	2010	2030	2050
1,920,000	1,990,000	2,050,000	2,170,000	2,290,000

Diablo Canyon Nuclear Power Plant

[**Prev** | **Next** | **Top of file**]

Location:

San Luis Obispo County, California

19 km (12 miles) W of San Luis Obispo

latitude 35.2117°N; longitude 120.8544°W

Licensee: Pacific Gas and Electric Co.

Unit Information	Unit 1	Unit 2
Docket Number	50-275	50-323
Construction Permit	1968	1970
Operating License	1984	1985
Commercial Operation	1985	1986
License Expiration	2024	2025
Licensed Thermal Power [MW(t)]	3338	3411
Design Electrical Rating [net MW(e)]	1086	1119
Type of Reactor	PWR	PWR
Nuclear Steam Supply System Vendor	WEST	WEST

Cooling Water System

Type: once through

Source: Pacific Ocean

Source Temperature Range: 10-17°C (50-63°F)

Condenser Flow Rate: 54.5 m3/s (863,000 gal/min) each unit

Design Condenser Temperature Rise: 10°C (18°F)

Intake Structure: reinforced-concrete structure located at shore line in a cove with artificial breakwater wall

Discharge Structure: reinforced-concrete structure drops water in stair step type weir overflow from elevation 21 m (70 ft) to the ocean and discharges on the surface at the shore line

Site Information

Total Area: 300 ha (750 acres)

Exclusion Distance: 0.80 km (0.50 mile)

Low Population Zone: 9.66 km (6.00 miles)

Nearest City: Santa Barbara; 1980 population: 74,542

Site Topography: hilly

Surrounding Area Topography: hilly to mountainous

Land Use within 8 km (5 miles): undeveloped and wooded

Nearby Features:

Site is remote, the nearest town being San Luis Obispo 19 km (12 miles) E. Beaches 11-24 km (7-15 miles) ESE have an influx of summer visitors. Pismo Beach State Park and Morro Bay State Park are within 24 km (15 miles). Vandenberg Air Base is 56 km (35 miles) ESE.

Area of Transmission Line Corridor: 2400 ha (6000 acres)

Population within an 80-km (50-mile) radius:

1990	2000	2010	2030	2050
300,000	330,000	350,000	380,000	420,000

Dresden Nuclear Power Station

[**Prev** | **Next** | **Top of file**]

Location:

Grundy County, Illinois

14 km (9 miles) E of Morris

latitude 41.3897°N; longitude 88.2711°W

Licensee: Commonwealth Edison Co.

Unit Information	Unit 2	Unit 3
Docket Number	50-237	50-249
Construction Permit	1966	1966
Operating License	1969	1971
Commercial Operation	1970	1971
License Expiration	2010	2011
Licensed Thermal Power [MW(t)]	2527	2527
Design Electrical Rating [net MW(e)]	794	794
Type of Reactor	BWR	BWR
Nuclear Steam Supply System Vendor	GE	GE

Cooling Water System

Type: cooling lake & spray canal

Source: Kankakee River

Source Temperature Range: 4-29°C (40-85°F)

Condenser Flow Rate: 29.7 m3/s (471,000 gal/min) each unit

Design Condenser Temperature Rise:

Intake Structure: canal from Kankakee River to a crib house

Discharge Structure: A canal carries water to a cooling lake of about 520 ha (1275 acres) with a hold-up time of about 3 days. The water then divides, some going to the Illinois River and some returns to the plant. Spray modules are floated in the canals.

Site Information

Total Area: 386 ha (953 acres) plus 516-ha (1275-acre) cooling lake

Exclusion Distance: 0.80-km (0.50-mile) radius

Low Population Zone: 8.00 km (4.97 miles)

Nearest City: Joliet; 1980 population: 77,956

Site Topography: flat

Surrounding Area Topography: rolling prairie

Land Use within 8 km (5 miles): agriculture

Nearby Features:

The nearest town is Channahon 5 km (3 miles) NNE. The General Electric Nuclear Power Plant Training Center is S of the site. A large abandoned strip mine is located in the area. Braidwood Station nuclear plant is about 16 km (10 miles) S and La Salle County Station nuclear plant is about 35 km (22 miles) SW. An army ammunition plant is about 11 km (7 miles) E.

Area of Transmission Line Corridor: 911 ha (2250 acres)

Population within an 80-km (50-mile) radius:

1990	2000	2010	2030	2050
6,820,000	7,050,000	7,200,000	7,450,000	7,710,000

Duane Arnold Energy Center

[**Prev** | **Next** | **Top of file**]

Location:

Linn County, Iowa

13 km (8 miles) NW of Cedar Rapids

latitude 42.1006°N; longitude 91.7772°W

Licensee: Iowa Electric Light and Power Co.

Unit Information	Unit 1
Docket Number	50-331
Construction Permit	1970
Operating License	1974
Commercial Operation	1975
License Expiration	2014
Licensed Thermal Power [MW(t)]	1658
Design Electrical Rating [net MW(e)]	538
Type of Reactor	BWR
Nuclear Steam Supply System Vendor	GE

Cooling Water System

Type: mechanical draft cooling towers

Source: Cedar River

Source Temperature Range: 0-32°C (32-89°F)

Condenser Flow Rate: 18 m3/s (290,000 gal/min)

Design Condenser Temperature Rise: 14°C (25°F)

Intake Structure: structure on river shoreline

Discharge Structure: canal to shoreline

Site Information

Total Area: 200 ha (500 acres)

Exclusion Distance: 0.43 km (0.27 mile)

Low Population Zone: 9.66 km (6.00 miles)

Nearest City: Cedar Rapids; 1980 population: 110,243

Site Topography: flat

Surrounding Area Topography: rolling and hilly

Land Use within 8 km (5 miles): agricultural

Nearby Features:

The nearest town is Palo about 3 km (2 miles) SW. Several wildlife refuge areas are within 16 km (10 miles) of the site.

Area of Transmission Line Corridor: 469 ha (1160 acres)

Population within an 80-km (50-mile) radius:

1990	2000	2010	2030	2050
620,000	660,000	690,000	750,000	820,000

Joseph M. Farley Nuclear Plant

[**Prev** | **Next** | **Top of file**]

Location:

Houston County, Alabama

26 km (16 miles) E of Dothan

latitude 31.2228°N; longitude 85.1125°W

Licensee: Alabama Power Co.

Unit Information	Unit 1	Unit 2
Docket Number	50-348	50-364
Construction Permit	1972	1972
Operating License	1977	1981
Commercial Operation	1977	1981
License Expiration	2017	2021

Licensed Thermal Power [MW(t)]	2652	2652
Design Electrical Rating [net MW(e)]	829	829
Type of Reactor	PWR	PWR
Nuclear Steam Supply System Vendor	WEST	WEST

Cooling Water System

Type: mechanical draft cooling towers

Source: Chattahoochee River

Source Temperature Range: 30°C (86°F) maximum

Condenser Flow Rate: 40.1 m3/s (635,000 gal/min) each unit

Design Condenser Temperature Rise: 11°C (20°F)

Intake Structure: intake from river bank via a storage pond

Discharge Structure: at river bank

Site Information

Total Area: 749 ha (1850 acres)

Exclusion Distance: 1.26 km (0.78 mile)

Low Population Zone: 3.22 km (2.00 miles)

Nearest City: Columbus, Georgia; 1980 population: 169,441

Site Topography: flat to rolling

Surrounding Area Topography: rolling

Land Use within 8 km (5 miles): agricultural and wooded

Nearby Features:

The nearest town is Columbia about 6 km (4 miles) N. Chattahoochee State Park is about 19 km (12 miles) S.

Area of Transmission Line Corridor: 2140 ha (5300 acres)

Population within an 80-km (50-mile) radius:

1990	2000	2010	2030	2050
390,000	410,000	440,000	490,000	540,000

Enrico Fermi Atomic Power Plant

[**Prev** | **Next** | **Top of file**]

Location:

Monroe County, Michigan

48 km (30 miles) SW of Detroit

latitude 41.9631°N; longitude 83.2578°W

Licensee: Detroit Edison Co.

Unit Information	Unit 2
Docket Number	50-341
Construction Permit	1972
Operating License	1985
Commercial Operation	1988
License Expiration	2025
Licensed Thermal Power [MW(t)]	3292
Design Electrical Rating [net MW(e)]	1093
Type of Reactor	BWR
Nuclear Steam Supply System Vendor	GE

Cooling Water System

Type: natural draft cooling towers

Source: Lake Erie

Source Temperature Range: 1-24°C (34-76°F)

Condenser Flow Rate: 52.80 m3/s (836,700 gal/min)

Design Condenser Temperature Rise: 10°C (18°F)

Intake Structure: at edge of lake

Discharge Structure: to the lake via a 20-ha (50-acre) pond

Site Information

Total Area: 453 ha (1120 acres)

Exclusion Distance: 0.92 km (0.57 mile)

Low Population Zone: 4.83 km (3.00 miles)

Nearest City: Detroit; 1980 population: 1,203,368

Site Topography: flat

Surrounding Area Topography: flat to rolling

Land Use within 8 km (5 miles): mostly agricultural

Nearby Features:

The town of Stony Point is adjacent to the site to the S. Sterling State Park and General Custer Historical Site are about 8 km (5 miles) SW.

Area of Transmission Line Corridor: 73 ha (180 acres)

Population within an 80-km (50-mile) radius:

1990	2000	2010	2030	2050
5,370,000	5,630,000	5,840,000	6,230,000	6,650,000

James A. Fitzpatrick Nuclear Power Plant

[**Prev** | **Next** | **Top of file**]

Location:

Oswego County, New York

10 km (6 miles) NE of Oswego

latitude 43.5239°N; longitude 76.3983°W

Licensee: Power Authority of the State Of New York

Unit Information	
Docket Number	50-333
Construction Permit	1970
Operating License	1974
Commercial Operation	1975
License Expiration	2014
Licensed Thermal Power [MW(t)]	2436
Design Electrical Rating [net MW(e)]	816
Type of Reactor	BWR
Nuclear Steam Supply System Vendor	GE

Cooling Water System

Type: once through

Source: Lake Ontario

Source Temperature Range: 3-19°C (37-67°F)

Condenser Flow Rate: 22.25 m3/s (352,600 gal/min)

Design Condenser Temperature Rise: 18°C (32°F)

Intake Structure: intake from the lake

Discharge Structure: discharge to the lake

Site Information

Total Area: 284 ha (702 acres)

Exclusion Distance: 0.92 km (0.57 mile)

Low Population Zone: 5.47 km (3.40 miles)

Nearest City: Syracuse; 1980 population: 170,105

Site Topography: flat to rolling

Surrounding Area Topography: rolling

Land Use within 8 km (5 miles): agricultural, industrial, residential, and recreational

Nearby Features:

The nearest town is Lakeview about 1.6 km (1 mile) WSW. Fort Ontario is about 8 km (5 miles) SW. Nine Mile Point Nuclear Station is about 0.8 km (0.5 mile) W.

Area of Transmission Line Corridor: 400 ha (1000 acres)

Population within an 80-km (50-mile) radius:

1990	2000	2010	2030	2050
820,000	810,000	800,000	800,000	810,000

Fort Calhoun Station

[**Prev** | **Next** | **Top of file**]

Location:

Washington County, Nebraska

31 km (19 miles) N of Omaha

latitude 41.5208°N; longitude 96.0767°W

Licensee: Omaha Public Power District

Unit Information	Unit 1
Docket Number	50-285
Construction Permit	1968
Operating License	1973
Commercial Operation	1974
License Expiration	2013
Licensed Thermal Power [MW(t)]	1500
Design Electrical Rating [net MW(e)]	478
Type of Reactor	PWR
Nuclear Steam Supply System Vendor	CE

Cooling Water System

Type: once through

Source: Missouri River

Source Temperature Range: 0-27°C (32-80°F)

Condenser Flow Rate: 23 m3/s (360,000 gal/min)

Design Condenser Temperature Rise: 9.94°C (17.9°F)

Intake Structure: concrete structure at river shore

Discharge Structure: at river shore

Site Information

Total Area: 270 ha (660 acres)

Exclusion Distance: 0.92-km (0.57-mile) minimum

Low Population Zone: 8.05 km (5.00 miles)

Nearest City: Omaha; 1980 population: 313,939

Site Topography: flat to rolling

Surrounding Area Topography: flat and rolling

Land Use within 8 km (5 miles): agricultural

Nearby Features:

The nearest town is De Soto 3 km (2 miles) SSE. De Soto National Wildlife Refuge is about 1.6 km (1 mile) E. Wilson Island State Park is about 6 km (4 miles) SE.

Area of Transmission Line Corridor: 75.3 ha (186 acres)

Population within an 80-km (50-mile) radius:

1990	2000	2010	2030	2050
770,000	800,000	830,000	890,000	950,000

Robert Emmett Ginna Nuclear Power Plant

[**Prev** | **Next** | **Top of file**]

Location:

Wayne County, New York

32 km (20 miles) NE of Rochester

latitude 43.2778°N; longitude 77.3089°W

Licensee: Rochester Gas and Electric Corp.

Unit Information	Unit 1
Docket Number	50-244
Construction Permit	1966
Operating License	1969
Commercial Operation	1970

License Expiration	2009
Licensed Thermal Power [MW(t)]	1520
Design Electrical Rating [net MW(e)]	470
Type of Reactor	PWR
Nuclear Steam Supply System Vendor	WEST

Cooling Water System

Type: once through

Source: Lake Ontario

Source Temperature Range: 0-27°C (32-80°F)

Condenser Flow Rate: 22.5 m3/s (356,000 gal/min)

Design Condenser Temperature Rise: 10.9°C (19.6°F)

Intake Structure: Structure is located on lake bottom 940 m (3100 ft) from shore. Water flows to screenhouse via a 3-m (10-ft) diameter tunnel in bedrock.

Discharge Structure: open canal to Lake Ontario

Site Information

Total Area: 137 ha (338 acres)

Exclusion Distance: 0.47-1.38 km (0.29-0.85 mile)

Low Population Zone: 4.83 km (3.00 miles)

Nearest City: Rochester; 1980 population: 241,741

Site Topography: gently rolling to flat

Surrounding Area Topography: sloping

Land Use within 8 km (5 miles): agricultural, orchards

Nearby Features:

The nearest town is Lakeside 3 km (2 miles) SW. The N.Y. Central Railroad is about 5 km (3 miles) S.

Area of Transmission Line Corridor: 110 ha (280 acres)

Population within an 80-km (50-mile) radius:

1990	2000	2010	2030	2050
1,140,000	1,120,000	1,100,000	1,110,000	1,120,000

Grand Gulf Nuclear Station

[**Prev** | **Next** | **Top of file**]

Location:

Claiborne County, Mississippi

40 km (25 miles) S of Vicksburg

latitude 32.0075°N; longitude 91.0475°W

Licensee: System Energy Resources, Inc.

Unit Information	Unit 1
Docket Number	50-416
Construction Permit	1974
Operating License	1984
Commercial Operation	1985
License Expiration	2024
Licensed Thermal Power [MW(t)]	3833
Design Electrical Rating [net MW(e)]	1250
Type of Reactor	BWR
Nuclear Steam Supply System Vendor	GE

Cooling Water System

Type: natural draft cooling towers

Source: Mississippi River

Source Temperature Range: 1-28°C (33-82°F)

Condenser Flow Rate: 36.1 m3/s (572,000 gal/min)

Design Condenser Temperature Rise: 17°C (30°F)

Intake Structure: a series of radial-collector wells along the shoreline

Discharge Structure: discharge to river via a barge slip

Site Information

Total Area: 850 ha (2100 acres)

Exclusion Distance: 0.69-km (0.43-mile) radius

Low Population Zone: 3.22 km (2.00 miles)

Nearest City: Jackson; 1980 population: 202,895

Site Topography: flat to rolling

Surrounding Area Topography: flat and rolling

Land Use within 8 km (5 miles): wooded and recreational

Nearby Features:

The nearest town is Grand Gulf 3 km (2 miles) N. The Natchez Trace Parkway is about 10 km (6 miles) SE. The Grand Gulf Military Park is just N of the site. There are numerous hunting lodges near the site.

Area of Transmission Line Corridor: 930 ha (2300 acres)

Population within an 80-km (50-mile) radius:

1990	2000	2010	2030	2050
350,000>	380,000	410,000	450,000	500,000

Haddam Neck Plant (Connecticut Yankee)

[**Prev** | **Next** | **Top of file**]

Location:

Middlesex County, Connecticut

21 km (13 miles) E of Meriden

latitude 41.4819°N; longitude 72.4992°W

Licensee: Connecticut Yankee Atomic Power Co.

Unit Information	
Docket Number	50-213
Construction Permit	1964
Operating License	1967
Commercial Operation	1968
License Expiration	2007
Licensed Thermal Power [MW(t)]	1825
Design Electrical Rating [net MW(e)]	582
Type of Reactor	PWR
Nuclear Steam Supply System Vendor	WEST

Cooling Water System

Type: once through

Source: Connecticut River

Source Temperature Range: 1-29°C (34-85°F)

Condenser Flow Rate: 23.5 m3/s (372,000 gal/min)

Design Condenser Temperature Rise: 12.4°C (22.4°F)

Intake Structure: at shoreline

Discharge Structure: discharge canal to Connecticut River about 1.6 km (1 mile) downriver

Site Information

Total Area: 212 ha (525 acres)

Exclusion Distance: 0.53 km (0.33 mile)

Low Population Zone: 4.35 km (2.70 miles)

Nearest City: Meriden; 1980 population: 57,118

Site Topography: level with steep slopes up from river

Surrounding Area Topography: mostly hilly

Land Use within 8 km (5 miles): wooded

Nearby Features:

The nearest town is Haddam 1.6 km (1 mile) WSW. Haddam Meadows State Park is within 1.6 km (1 mile). The New York, New Haven, and Hartford Railroad runs along the pposite river bank. The Millstone Nuclear Power Station is 32 km (20 miles) SE.

Area of Transmission Line Corridor: 399 ha (985 acres)

Population within an 80-km (50-mile) radius:

1990	2000	2010	2030	2050
3,630,000	3,770,000	3,910,000	4,140,000	4,380,000

Shearon Harris Nuclear Power Plant

[**Prev** | **Next** | **Top of file**]

Location:

Wake County, North Carolina

32 km (20 miles) SW Raleigh

latitude 35.6336°N; longitude 78.9564°W

Licensee: Carolina Power and Light Co.

Unit Information	Unit 1
Docket Number	50-400
Construction Permit	1978
Operating License	1987
Commercial Operation	1987
License Expiration	2027
Licensed Thermal Power [MW(t)]	2775
Design Electrical Rating [net MW(e)]	900
Type of Reactor	PWR
Nuclear Steam Supply System Vendor	WEST

Cooling Water System

Type: natural draft cooling tower

Source: Buckhorn Creek

Source Temperature Range: 5-27°C (41-81°F)

Condenser Flow Rate: 30.5 m3/s (483,000 gal/min)

Design Condenser Temperature Rise: 14.3°C (25.7°F)

Intake Structure: at shoreline of reservoir on Buckhorn Creek

Discharge Structure: discharged to reservoir

Site Information

Total Area: 4348 ha (10,744 acres)

Exclusion Distance: 2.03-km (1.26-miles) minimum

Low Population Zone: 4.83 km (3.00 miles)

Nearest City: Raleigh; 1980 population: 149,771

Site Topography: rolling

Surrounding Area Topography: rolling

Land Use within 8 km (5 miles): mostly wooded with some agricultural

Nearby Features:

The nearest town is Bonsal 3 km (2 miles) NW. The Seaboard Coast Line Railroad is 3 km (2 miles) NW. Buckhorn Creek feeds into the Cape Fear River.

Area of Transmission Line Corridor: 1400 ha (3500 acres)

Population within an 80-km (50-mile) radius:

1990	2000	2010	2030	2050
1,430,000	1,570,000	1,690,000	1,890,000	2,120,000

Edwin I. Hatch Nuclear Plant

[**Prev** | **Next** | **Top of file**]

Location:

Appling County Georgia

18 km (11 miles) N of Baxley

latitude 31.9342°N; longitude 82.3444°W

Licensee: Georgia Power Co.

Unit Information	Unit 1	Unit 2

Docket Number	50-321	50-366
Construction Permit	1969	1972
Operating License	1974	1978
Commercial Operation	1975	1979
License Expiration	2014	2018
Licensed Thermal Power [MW(t)]	2436	2436
Design Electrical Rating [net MW(e)]	776	784
Type of Reactor	BWR	BWR
Nuclear Steam Supply System Vendor	GE	GE

Cooling Water System

Type: mechanical draft cooling towers

Source: Altamaha River

Source Temperature Range: 6-32°C (43-90°F)

Condenser Flow Rate: 35.1 m3/s (556,000 gal/min) each unit

Design Condenser Temperature Rise: 11°C (20°F)

Intake Structure: at edge of river

Discharge Structure: 37 m (120 ft) from shore

Site Information

Total Area: 908 ha (2244 acres)

Exclusion Distance: 1.26 km (0.78 mile)

Low Population Zone: 1.26 km (0.78 mile)

Nearest City: Savannah; 1980 population: 141,654

Site Topography: flat to rolling

Surrounding Area Topography: flat to rolling

Land Use within 8 km (5 miles): mostly wooded

Nearby Features:

The nearest town is Cedar Crossing about 11 km (7 miles) NNW. U.S. Highway 1 is just west of the site.

Area of Transmission Line Corridor: 1898 ha (4691 acres)

Population within an 80-km (50-mile) radius:

1990	2000	2010	2030	2050
330,000	360,000	380,000	420,000	460,000

Hope Creek Generating Station

Location:

Salem County, New Jersey

13 km (8 miles) SW of Salem

latitude 39.4678°N; longitude 75.5381°W

Licensee: Public Service Electric and Gas Co.

Unit Information	Unit 1
Docket Number	50-354
Construction Permit	1974
Operating License	1986
Commercial Operation	1986
License Expiration	2026
Licensed Thermal Power [MW(t)]	3293
Design Electrical Rating [net MW(e)]	1067
Type of Reactor	BWR
Nuclear Steam Supply System Vendor	GE

Cooling Water System

Type: natural draft cooling tower

Source: Delaware River

Source Temperature Range: 1-27°C (34-81°F)

Condenser Flow Rate: 34.8 m3/s (552,000 gal/min)

Design Condenser Temperature Rise: 16°C (28°F)

Intake Structure: at edge of river

Discharge Structure: pipe 3 m (10 ft) offshore

Site Information

Total Area: 300 ha (740 acres)

Exclusion Distance: 0.90-km (0.56-mile) radius

Low Population Zone: 8.05-km (5.00-mile) radius

Nearest City: Wilmington, Delaware; 1980 population: 70,195

Site Topography: flat

Surrounding Area Topography: flat

Land Use within 8 km (5 miles): tidal marshes and grasslands

Nearby Features:

The nearest town is Port Penn about 6 km (4 miles) NW in Delaware. The nearest railroad is 13 km (8 miles) NE. The plant is on the same site as the Salem Nuclear Generating Sation.

Area of Transmission Line Corridor: 369 ha (912 acres)

Population within an 80-km (50-mile) radius:

1990	2000	2010	2030	2050
4,850,000	4,960,000	5,050,000	5,230,000	5,420,000

Indian Point Station

[**Prev** | **Next** | **Top of file**]

Location:

Westchester County, New York

39 km (24 miles) N of New York City

latitude 41.2714°N; longitude 73.9525°W

Licensee: Consolidated Edison Co. of New York, Inc. (Unit 2) Power Authority of the State of New York (Unit 3)

Unit Information	Unit 2	Unit 3
Docket Number	50-247	50-286
Construction Permit	1966	1969
Operating License	1973	1976
Commercial Operation	1974	1976
License Expiration	2013	2016
Licensed Thermal Power [MW(t)]	2758	3025
Design Electrical Rating [net MW(e)]	873	965
Type of Reactor	PWR	PWR
Nuclear Steam Supply System Vendor	WEST	WEST

Cooling Water System

Type: once through

Source: Hudson River

Source Temperature Range: 0-26°C (32-78°F)

Condenser Flow Rate: 53 m3/s (840,000 gal/min) each unit

Design Condenser Temperature Rise: 9.2°C (16.6°F)

Intake Structure: concrete structure at river bank

Discharge Structure: discharge channel to river exiting through 12 ports

Site Information

Total Area: 96.7 ha (239 acres)

Exclusion Distance: 0.32-km (0.20-mile) radius

Low Population Zone: 1.05-km (0.65-mile) radius

Nearest City: White Plains; 1980 population: 46,999

Site Topography: hilly

Surrounding Area Topography: hilly to mountainous

Land Use within 8 km (5 miles): residential, parks, military reservations

Nearby Features:

The nearest town is Buchannan 3 km (2 miles) ESE. Camp Smith (military) is 1.6 km (1 mile) N and West Point is 13 km (8 miles) N.

Area of Transmission Line Corridor: 4 ha (10 acres)

Population within an 80-km (50-mile) radius:

1990	2000	2010	2030	2050
15,190,000	15,000,000	14,890,000	15,200,000	15,520,000

Kewaunee Nuclear Power Plant

[**Prev** | **Next** | **Top of file**]

Location:

Kewaunee County, Wisconsin

43 km (27 miles) E of Green Bay

latitude 44.3431°N; longitude 87.5361°W

Licensee: Wisconsin Public Service Corp.

Unit Information

Docket Number	50-305
Construction Permit	1968
Operating License	1973
Commercial Operation	1974
License Expiration	2013
Licensed Thermal Power [MW(t)]	1650
Design Electrical Rating [net MW(e)]	535
Type of Reactor	PWR
Nuclear Steam Supply System Vendor	WEST

Cooling Water System

Type: once through

Source: Lake Michigan

Source Temperature Range: 1-19°C (34-67°F)

Condenser Flow Rate: 27 m3/s (420,000 gal/min)

Design Condenser Temperature Rise: 11°C (19°F)

Intake Structure: intake crib 4.6 km (15 ft) deep 533 m (1750 ft) from shore

Discharge Structure: at shoreline

Site Information

Total Area: 367 ha (908 acres)

Exclusion Distance: 1.21 km (0.75 mile)

Low Population Zone: 4.83-km (3.00-mile) radius

Nearest City: Green Bay; 1980 population: 87,899

Site Topography: flat to rolling

Surrounding Area Topography: flat to rolling

Land Use within 8 km (5 miles): agricultural and dairy farming

Nearby Features:

The nearest town is Two Creeks about 5 km (3 miles) S. Point Beach Nuclear Plant is about 8 km (5 miles) S.

Area of Transmission Line Corridor: 431.4 ha (1066 acres)

Population within an 80-km (50-mile) radius:

1990	2000	2010	2030	2050
640,000	670,000	690,000	730,000	780,000

La Salle County Station

[**Prev** | **Next** | **Top of file**]

Location:

La Salle County, Illinois

18 km (11 miles) SE of Ottawa

latitude 41.2439°N; longitude 88.6708°W

Licensee: Commonwealth Edison Co.

Unit Information	Unit 1	Unit 2
Docket Number	50-373	50-374

Construction Permit	1973	1973
Operating License	1982	1984
Commercial Operation	1984	1984
License Expiration	2022	2024
Licensed Thermal Power [MW(t)]	3323	3323
Design Electrical Rating [net MW(e)]	1078	1078
Type of Reactor	BWR	BWR
Nuclear Steam Supply System Vendor	GE	GE

Cooling Water System

Type: cooling pond

Source: Illinois River

Source Temperature Range: 8-29°C (47-85°F)

Condenser Flow Rate: 40.7 m3/s (645,000 gal/min) each unit

Design Condenser Temperature Rise: 13°C (24°F)

Intake Structure: intake from 832.8-ha (2058-acre) cooling pond, makeup from river

Discharge Structure: discharge to cooling pond

Site Information

Total Area: 1240 ha (3060 acres)

Exclusion Distance: 0.51 km (0.32 mile)

Low Population Zone: 6.41 km (3.98 miles)

Nearest City: Joliet; 1980 population: 77,956

Site Topography: flat

Surrounding Area Topography: flat with hills along river

Land Use within 8 km (5 miles): agricultural

Nearby Features:

The nearest town is Seneca about 8 km (5 miles) NNE. Braidwood Station (nuclear plant) is about 32 km (20 miles) ENE and Dresden Nuclear Power Station is about 35 km (22 miles) NE.

Area of Transmission Line Corridor: 921.9 ha (2278 acres)

Population within an 80-km (50-mile) radius:

1990	2000	2010	2030	2050
1,160,000	1,220,000	1,260,000	1,310,000	1,370,000

Limerick Generating Station

Location:

Montgomery County, Pennsylvania

34 km (21 miles) NW of Philadelphia

latitude 40.2200°N; longitude 75.5900°W

Licensee: Philadelphia Electric Co.

Unit Information	Unit 1	Unit 2
Docket Number	50-352	50-353
Construction Permit	1974	1974
Operating License	1985	1990
Commercial Operation	1986	1990
License Expiration	2025	2020
Licensed Thermal Power [MW(t)]	3293	3293
Design Electrical Rating [net MW(e)]	1055	1055
Type of Reactor	BWR	BWR
Nuclear Steam Supply System Vendor	GE	GE

Cooling Water System

Type: natural draft cooling towers

Source: Schuylkill River

Source Temperature Range: 6-28°C (42-82°F)

Condenser Flow Rate: 28 m3/s (450,000 gal/min) each unit

Design Condenser Temperature Rise: 17°C (30°F)

Intake Structure: intake from river

Discharge Structure: discharge to river

Site Information

Total Area: 241 ha (595 acres)

Exclusion Distance: 0.76 km (0.47 mile)

Low Population Zone: 2.09-km (1.30-mile) radius

Nearest City: Reading; 1980 population: 78,686

Site Topography: rolling

Surrounding Area Topography: rolling

Land Use within 8 km (5 miles): agricultural and undeveloped

Nearby Features:

The nearest town is Linfield about 1.6 km (1 mile) SE. Valley Forge State Park is 16 km (10 miles) SSE. U.S. Highway I-76 is about 16 km (10 miles) S.

Area of Transmission Line Corridor: 3 ha (7 acres)

Population within an 80-km (50-mile) radius:

1990	2000	2010	2030	2050
6,970,000	7,070,000	7,170,000	7,390,000	7,620,000

Maine Yankee Atomic Power Plant

[**Prev** | **Next** | **Top of file**]

Location:

Lincoln County, Maine

16 km (10 miles) NE of Bath

latitude 43.9506°N; longitude 69.6961°W

Licensee: Maine Yankee Atomic Power Co.

Unit Information

Docket Number	50-309
Construction Permit	1968
Operating License	1973
Commercial Operation	1972
License Expiration	2013
Licensed Thermal Power [MW(t)	2700
Design Electrical Rating [net MW(e)]	825
Type of Reactor	PWR
Nuclear Steam Supply System Vendor	CE

Cooling Water System

Type: once through

Source: Back River

Source Temperature Range: 3-14°C (37-57°F)

Condenser Flow Rate: 26.9 m3/s (426,000 gal/min)

Design Condenser Temperature Rise: 14.2°C (25.6°F)

Intake Structure: at river bank

Discharge Structure: to Montsweag Bay on Back River

Site Information

Total Area: 300 ha (740 acres)

Exclusion Distance: 0.61-km (0.38-mile) radius

Low Population Zone: 9.66-km (6.00-mile) radius

Nearest City: Portland; 1980 population: 61,572

Site Topography: flat to rolling

Surrounding Area Topography: rolling

Land Use within 8 km (5 miles): wooded and some idle farm land

Nearby Features:

The nearest town is Edgecomb about 5 km (3 miles) E. U.S. Highway 1 and the Maine Central Railroad are about 1.6 km (1 mile) NE.

Area of Transmission Line Corridor: 89 ha (220 acres)

Population within an 80-km (50-mile) radius:

1990	2000	2010	2030	2050
640,000	700,000	750,000	830,000	920,000

William B. McGuire Nuclear Station

[**Prev** | **Next** | **Top of file**]

Location:

Mecklenburg County, North Carolina

27 km (17 miles) NNW of Charlotte

latitude 35.4322°N; longitude 80.9483°W

Licensee: Duke Power Co.

Unit Information	Unit 1	Unit 2
Docket Number	50-369	50-370
Construction Permit	1973	1973
Operating License	1981	1983
Commercial Operation	1981	1984
License Expiration	2021	2023
Licensed Thermal Power [MW(t)]	3411	3411
Design Electrical Rating [net MW(e)]	1180	1180
Type of Reactor	PWR	PWR
Nuclear Steam Supply System Vendor	WEST	WEST

Cooling Water System

Type: once through

Source: Lake Norman

Source Temperature Range: 3-32°C (38-89°F)

Condenser Flow Rate: 42.6 m3/s (675,000 gal/min) each unit

Design Condenser Temperature Rise: 12.3°C (22.1°F)

Intake Structure: submerged and surface intakes at shoreline

Discharge Structure: 610-m (2000-ft) discharge canal

Site Information

Total Area: 12,100 ha (30,000 acres)

Exclusion Distance: 0.76-km (0.47-mile) radius

Low Population Zone: 8.85 km (5.50 miles)

Nearest City: Charlotte; 1980 population: 315,474

Site Topography: rolling

Surrounding Area Topography: hilly

Land Use within 8 km (5 miles): agricultural and wooded

Nearby Features:

The nearest town is Lowesville about 5 km (3 miles) W. The dam forming Lake Norman and a hydro powerplant are adjacent to the site.

Area of Transmission Line Corridor: 25 ha (62 acres)

Population within an 80-km (50-mile) radius:

1990	2000	2010	2030	2050
1,750,000	1,900,000	2,040,000	2,280,000	2,540,000

Millstone Nuclear Power Station

[**Prev** | **Next** | **Top of file**]

Location:

New London County, Connecticut 5 km (3 miles) WSW of New London latitude 41.3086°N; longitude 72.1681°W

Licensee: Northeast Utilities

Unit Information	Unit 1	Unit 2	Unit 3
Docket Number	50-245	50-336	50-423
Construction Permit	1966	1970	1974
Operating License	1970	1975	1986
Commercial Operation	1971	1975	1986

License Expiration	2010	2015	2026
Licensed Thermal Power [MW(t)]	2011	2700	3411
Design Electrical Rating [net MW(e)]	660	870	1154
Type of Reactor	BWR	PWR	PWR
Nuclear Steam Supply System Vendor	GE	CE	WEST

Cooling Water System

Type: once through

Source: Long Island Sound

Source Temperature Range: 2-22°C (36-72°F)

Condenser Flow Rate: 27 m3/s (420,000 gal/min) for Unit 1 32.97 m3/s (522,500 gal/min) for Unit 2 57.2108 m3/s (906,668 gal/min) for Unit 3

Design Condenser Temperature Rise: 12°C (21°F) for Unit 1 13°C (24°F) for Unit 2 9.7°C (17.5°F) for Unit 3

Intake Structure: on shore of Niantic Bay off Long Island Sound

Discharge Structure: discharge to Niantic Bay via holding pond

Site Information

Total Area: 200 ha (500 acres)

Exclusion Distance: 0.55-km (0.34-mile) minimum

Low Population Zone: 3.86-km (2.40-mile) radius

Nearest City: New Haven; 1980 population: 126,089

Site Topography: flat

Surrounding Area Topography: flat to rolling

Land Use within 8 km (5 miles): mostly undeveloped with some recreational, agricultural, and residential

Nearby Features:

The nearest town is Niantic 3 km (2 miles) NW. U.S. Highway I-95 is about 6 km (4 miles) NNE. Stone Ranch Military Reservation is about 10 km (6 miles) NW. Harkness Memorial State Park, Bluff Point State Park, and Rocky Neck State Park are within 8 km (5 miles) of the site. The U.S. Dept. of Agriculture Plum Island facility is 16 km (10 miles) S in Long Island Sound. The Haddam Neck Plant (nuclear) is 32 km (20 miles) NW.

Area of Transmission Line Corridor: 375 ha (927 acres)

Population within an 80-km (50-mile) radius:

1990	2000	2010	2030	2050
2,760,000	2,860,000	2,960,000	3,140,000	3,330,000

Monticello Nuclear Generating Plant

Location:

Wright County, Minnesota 56 km (35 miles) NW of Minneapolis latitude 45.3333°N; longitude 93.8483°W

Licensee: Northern States Power Co.

Unit Information	
Docket Number	50-263
Construction Permit	1967
Operating License	1970
Commercial Operation	1971
License Expiration	2010
Licensed Thermal Power [MW(t)]	1670
Design Electrical Rating [net MW(e)]	545
Type of Reactor	BWR
Nuclear Steam Supply System Vendor	GE

Cooling Water System

Type: once through and helper towers

Source: Mississippi River

Source Temperature Range: 0-29°C (32-85°F)

Condenser Flow Rate: 18 m3/s (280,000 gal/min)

Design Condenser Temperature Rise: 14.9°C (26.8°F)

Intake Structure: canal

Discharge Structure: canal

Site Information

Total Area: 860 ha (2150 acres)

Exclusion Distance: 0.48 km (0.30 mile)

Low Population Zone: 1.61 km (1.00 mile)

Nearest City: Minneapolis; 1980 population: 370,951

Site Topography: flat terraces

Surrounding Area Topography: flat to gently sloping

Land Use within 8 km (5 miles): agricultural and dairy farming

Nearby Features:

The business district of Monticello is about 3.2 km (2 miles) SE. Sherburne National Wildlife Refuge is about 14 km (9 miles) N. Lake Maria State Park is about 10 km (6 miles) WSW and Sand Dunes State Forest and campground are 14 km (9 miles) NE.

Area of Transmission Line Corridor: 588.4 ha (1454 acres)

Population within an 80-km (50-mile) radius:

1990	2000	2010	2030	2050
2,170,000	2,360,000	2,520,000	2,820,000	3,150,000

North Anna Power Station

[**Prev** | **Next** | **Top of file**]

Location:

Louisa County, Virginia 64 km (40 miles) NW of Richmond latitude 38.0608°N; longitude 77.7906°W

Licensee: Virginia Electric and Power Co.

Unit Information	Unit 1	Unit 2
Docket Number	50-338	50-339
Construction Permit	1971	1971
Operating License	1978	1980
Commercial Operation	1978	1980
License Expiration	2018	2020
Licensed Thermal Power [MW(t)]	2893	2893
Design Electrical Rating [net MW(e)]	907	907
Type of Reactor	PWR	PWR
Nuclear Steam Supply System Vendor	WEST	WEST

Cooling Water System

Type: once through

Source: Lake Anna

Source Temperature Range: 9-28°C (48-83°F)

Condenser Flow Rate: 59.33 m3/s (940,300 gal/min) each unit

Design Condenser Temperature Rise: 8°C (14°F)

Intake Structure: intake on lake shore

Discharge Structure: discharged to lake via a 1400-ha (3400-acre) cooling pond.

Site Information

Total Area: 7545 ha (18,643 acres)

Exclusion Distance: 1.35 km (0.84 mile)

Low Population Zone: 9.66 km (6.00 miles)

Nearest City: Richmond; 1980 population: 219,214

Site Topography: rolling

Surrounding Area Topography: rolling

Land Use within 8 km (5 miles): agricultural and wooded

Nearby Features:

The nearest town is Centreville 1.6 km (1 mile) SW. Fredericksburg and Spotsylvania National Military Park is about 24 km (15 miles) NE.

Area of Transmission Line Corridor: 1428 ha (3528 acres)

Population within an 80-km (50-mile) radius:

1990	2000	2010	2030	2050
1,150,000	1,250,000	1,340,000	1,480,000	1,630,000

Nine Mile Point Nuclear Station

[**Prev** | **Next** | **Top of file**]

Location:

Oswego County, New York 10 km (6 miles) NE of Oswego latitude 43.5222°N; longitude 76.4100°W

Licensee: Niagra Mohawk Power Corp.

Unit Information	Unit 1	Unit 2
Docket Number	50-220	50-410
Construction Permit	1965	1974
Operating License	1968	1987
Commercial Operation	1969	1988
License Expiration	2008	2027
Licensed Thermal Power [MW(t)]	1850	3323
Design Electrical Rating [net MW(e)]	620	1080
Type of Reactor	BWR	BWR
Nuclear Steam Supply System Vendor	GE	GE

Cooling Water System

Type: Unit 1 - once through Unit 2 - natural draft cooling tower

Source: Lake Ontario

Source Temperature Range: 1-25°C (33-77°F)

Condenser Flow Rate: 16 m3/s (250,000 gal/min) for Unit 1 37 m3/s (580,000 gal/min) for Unit 2

Design Condenser Temperature Rise: 18°C (32°F) for Unit 1 15°C (27°F) for Unit 2

Intake Structure: separate submerged pipelines about 300 m (1000 ft) offshore

Discharge Structure: diffuser pipe 169 m (555 ft) long serving both units

Site Information

Total Area: 360 ha (900 acres)

Exclusion Distance: 1.19 km (0.74 mile) minimum

Low Population Zone: 6.44 km (4.00 mile) radius

Nearest City: Syracuse; 1980 population: 170,105

Site Topography: flat to rolling

Surrounding Area Topography: rolling

Land Use within 8 km (5 miles): agricultural, industrial, residential, and recreational

Nearby Features:

The nearest town is Lakeview about 1.6 km (1 mile) WSW. Fort Ontario is about 10 km (6 miles) SW. James A. FitzPatrick Nuclear Power Plant is 0.8 km (0.5 mile) E.

Area of Transmission Line Corridor: 664 ha (1640 acres)

Population within an 80-km (50-mile) radius:

1990	2000	2010	2030	2050
820,000	810,000	790,000	800,000	810,000

Oconee Nuclear Station

[**Prev** | **Next** | **Top of file**]

Location:

Oconee County, South Carolina 42 km (26 miles) W of Greenville latitude 34.7917°N; longitude 82.8986°W

Licensee: Duke Power Co.

Unit Information	Unit 1	Unit 2	Unit 3
Docket Number	50-269	50-270	50-287
Construction Permit	1967	1967	1967
Operating License	1973	1973	1974
Commercial Operation	1973	1974	1974
License Expiration	2013	2013	2014
Licensed Thermal Power [MW(t)]	2568	2568	2568
Design Electrical Rating [net MW(e)]	887	887	887
Type of Reactor	PWR	PWR	PWR
Nuclear Steam Supply System Vendor	B&W	B&W	B&W

Cooling Water System

Type: once through

Source: Lake Keowee

Source Temperature Range: 7-25°C (44-77°F)

Condenser Flow Rate: 43 m3/s (680,000 gal/min) for each unit

Design Condenser Temperature Rise: 9.6°C (17.2°F)

Intake Structure: A skimmer wall draws water from depths of 216-223 m (710-733 ft) at a velocity of 0.2 m/s (0.6 ft/s).

Discharge Structure: All three units discharge through one structure near Keowee dam. Discharge is underwater at a depth of 233 m (765 ft).

Site Information

Total Area: 210 ha (510 acres)

Exclusion Distance: 1.61-km (1.00-mile) radius

Low Population Zone: 9.66 km (6.00 miles)

Nearest City: Greenville; 1980 population: 58,242

Site Topography: flat to rolling

Surrounding Area Topography: hilly

Land Use within 8 km (5 miles): wooded

Nearby Features:

The nearest town is Six Mile 6 km (4 miles) ENE. Keowee dam is close to the plant. Chattahoochee National Forest is about 24 km (15 miles) W.

Area of Transmission Line Corridor: 3160 ha (7800 acres)

Population within an 80-km (50-mile) radius:

1990	2000	2010	2030	2050
990,000	1,080,000	1,170,000	1,310,000	1,470,000

Oyster Creek Nuclear Generating Station

[**Prev** | **Next** | **Top of file**]

Location:

Ocean County, New Jersey 14 km (9 miles) S of Toms River latitude 39.8142°N; longitude 74.2064°W

Licensee: GPU Nuclear Corp.

Unit Information	Unit 1
Docket Number	50-219

Construction Permit	1964
Operating License	1969
Commercial Operation	1969
License Expiration	2009
Licensed Thermal Power [MW(t)]	1930
Design Electrical Rating [net MW(e)]	650
Type of Reactor	BWR
Nuclear Steam Supply System Vendor	GE

Cooling Water System

Type: once through

Source: Barnegat Bay

Source Temperature Range: 2-28°C (35-83°F)

Condenser Flow Rate: 29 m3/s (460,000 gal/min)

Design Condenser Temperature Rise: 8°C (14°F)

Intake Structure: Forked River serves as a canal for intake and discharge to Barnegat Bay.

Discharge Structure: Forked River serves as a canal for intake and discharge to Barnegat Bay.

Site Information

Total Area: 573 ha (1416 acres)

Exclusion Distance: 0.40 km (0.25 mile)

Low Population Zone: 3.22 km (2.00 miles)

Nearest City: Atlantic City; 1980 population: 40,199

Site Topography: flat

Surrounding Area Topography: rolling plains to flat lowlands

Land Use within 8 km (5 miles): mostly undeveloped

Nearby Features:

The nearest town is Forked River about 3 km (2 miles) N. The Garden State Parkway is 1.6 km (1 mile) W. There is a large influx of people seeking recreation in the summer.

Area of Transmission Line Corridor: 130 ha (322 acres)

Population within an 80-km (50-mile) radius:

1990	2000	2010	2030	2050
4,030,000	4,190,000	4,300,000	4,560,000	4,840,000

Palisades Nuclear Plant

Location:

Van Buren County, Michigan 56 km (35 miles) W of Kalamazoo latitude 42.3222°N; longitude 86.3153°W

Licensee: Consumers Power Co.

Unit Information	Unit 1
Docket Number	50-255
Construction Permit	1967
Operating License	1972
Commercial Operation	1973
License Expiration	2012
Licensed Thermal Power [MW(t)]	2530
Design Electrical Rating [net MW(e)]	805
Type of Reactor	PWR
Nuclear Steam Supply System Vendor	CE

Cooling Water System

Type: mechanical draft cooling towers

Source: Lake Michigan

Source Temperature Range: 2-24°C (35-75°F)

Condenser Flow Rate: 25.6 m3/s (405,000 gal/min)

Design Condenser Temperature Rise: 14°C (25°F)

Intake Structure: intake crib 1000 m (3300 ft) from shore

Discharge Structure: canal 33 m (108 ft) long

Site Information

Total Area: 197 ha (487 acres)

Exclusion Distance: 0.71-km (0.44-mile) radius

Low Population Zone:

Nearest City: Kalamazoo; 1980 population: 79,722

Site Topography: flat to rolling

Surrounding Area Topography: rolling

Land Use within 8 km (5 miles): agricultural, wooded, berry farms, and orchards

Nearby Features:

The nearest town is South Haven about 6 km (4 miles) N. Van Buren State Park joins the plant on the north. Many tourists come to the beaches in the summer. The C&O Railway is about 3 km (2 miles) E. Highway I-196 is about 1.6 km (1 mile) E.

Area of Transmission Line Corridor: 910 ha (2250 acres)

Population within an 80-km (50-mile) radius:

1990	2000	2010	2030	2050
1,170,000	1,220,000	1,260,000	1,340,000	1,420,000

Palo Verde Nuclear Generating Station

[**Prev** | **Next** | **Top of file**]

Location:

Maricopa County, Arizona 55 km (34 miles) W of Phoenix latitude 33.3881°N; longitude 112.8644°W

Licensee: Arizona Public Service Co.

Unit Information	Unit 1	Unit 2	Unit 3
Docket Number	50-528	50-529	50-530
Construction Permit	1976	1976	1976
Operating License	1985	1986	1987
Commercial Operation	1986	1986	1988
License Expiration	2025	2026	2027
Licensed Thermal Power [MW(t)]	3800	3800	3800
Design Electrical Rating [net MW(e)]	1270	1270	1270
Type of Reactor	PWR	PWR	PWR
Nuclear Steam Supply System Vendor	CE	CE	CE

Cooling Water System

Type: mechanical draft cooling towers treatment plant

Source: Phoenix city sewage Source Temperature Range:

Condenser Flow Rate: 35 m3/s (560,000 gal/min) each unit

Design Condenser Temperature Rise: 17.8°C (32.1°F)

Intake Structure: 56-km (35-mile) underground pipeline from Phoenix 91st Avenue Sewage Treatment Plant

Discharge Structure: blowdown from the circulating water system is directed to on-site evaporation ponds without requiring any off-site discharge

Site Information

Total Area: 1640 ha (4050 acres)

Exclusion Distance: 0.87-km (0.54-mile) minimum

Low Population Zone: 6.44-km (4.00-mile) radius

Nearest City: Phoenix; 1980 population: 789,704

Site Topography: flat with hills

Surrounding Area Topography: flat with hills

Land Use within 8 km (5 miles): open desert with some agriculture

Nearby Features:

The nearest town is Wintersburg about 5 km (3 miles) N. U.S. Highway I-10 is about 11 km (7 miles) N. The Southern Pacific Railroad is about 8 km (5 miles) SE.

Area of Transmission Line Corridor: 6720 ha (16,600 acres)

Population within an 80-km (50-mile) radius:

1990	2000	2010	2030	2050
1,180,000	1,330,000	1,450,000	1,690,000	1,970,000

Peach Bottom Atomic Power Station

[**Prev** | **Next** | **Top of file**]

Location:

York County, Pennsylvania 29 km (18 miles) S of Lancaster latitude 39.7589°N; longitude 76.2692°W

Licensee: Philadelphia Electric Co.

Unit Information	Unit 2	Unit 3
Docket Number	50-277	50-278
Construction Permit	1968	1968
Operating License	1973	1974
Commercial Operation	1974	1974
License Expiration	2013	2014
Licensed Thermal Power [MW(t)]	3293	3293
Design Electrical Rating [net MW(e)]	1065	1065
Type of Reactor	BWR	BWR
Nuclear Steam Supply System Vendor	GE	GE

Cooling Water System

Type: once through with helper towers

Source: Conowingo Pond

Source Temperature Range: 1-27°C (34-80°F)

Condenser Flow Rate: 47 m3/s (750,000 gal/min) each unit

Design Condenser Temperature Rise: 11.6°C (20.8°F)

Intake Structure: intake from Conowingo Pond through a small intake pond

Discharge Structure: 1520-m (5000-ft) canal to Conowingo Pond

Site Information

Total Area: 250 ha (620 acres)

Exclusion Distance: 0.82-km (0.51-mile) minimum

Low Population Zone: 2.22 km (1.38 miles)

Nearest City: Lancaster; 1980 population: 54,725

Site Topography: rolling to hilly

Surrounding Area Topography: rolling to hilly

Land Use within 8 km (5 miles): agricultural and wooded

Nearby Features:

The nearest town is Slate Hill 3 km (2 miles) SW. Susquehanna State Park is about 5 km (3 miles) N. U.S. Highway I-95 is about 24 km (15 miles) SE. Conowingo Dam, about 13 km (8 miles) SE on the Susquehanna River, forms Conowingo Pond. Unit 1 is a 40 Mwe nuclear plant on the same site and was retired from service in 1974. Three Mile Island Nuclear Station is 56 km (35 miles) upstream on the Susquehanna River.

Area of Transmission Line Corridor: 417 ha (1030 acres)

Population within an 80-km (50-mile) radius:

1990	2000	2010	2030	2050
4,660,000	4,850,000	5,010,000	5,280,000	5,570,000

Perry Nuclear Power Plant

[**Prev** | **Next** | **Top of file**]

Location:

Lake County, Ohio 11 km (7 miles) NE of Painesville latitude 41.8008°N; longitude 81.1442°W

Licensee: Cleveland Electric Illuminating Co.

Unit Information	Unit 1
Docket Number	50-440
Construction Permit	1977
Operating License	1986
Commercial Operation	1987
License Expiration	2026
Licensed Thermal Power [MW(t)]	3579
Design Electrical Rating [net MW(e)]	1205
Type of Reactor	BWR
Nuclear Steam Supply System Vendor	GE

Cooling Water System

Type: natural draft cooling tower

Source: Lake Erie

Source Temperature Range: 0-26°C (32-79°F)

Condenser Flow Rate: 34.41 m3/s (545,400 gal/min)

Design Condenser Temperature Rise: 18°C (32°F)

Intake Structure: submerged multiport structure 777 m (2550 ft) offshore

Discharge Structure: submerged diffuser 503 m (1650 ft) offshore

Site Information

Total Area: 450 ha (1100 acres)

Exclusion Distance: 0.89-km (0.55-mile) radius

Low Population Zone: 4.02 km (2.50 miles)

Nearest City: Euclid; 1980 population: 59,999

Site Topography: flat

Surrounding Area Topography: rolling

Land Use within 8 km (5 miles): forest land, agricultural (horticulture), residential, industrial, and some recreational

Nearby Features:

The nearest town is North Perry 1.6 km (1 mile) SW. The Penn Central Railroad is about 5 km (3 miles) S. U.S. Highway I- 90 is about 8 km (5 miles) S.

Area of Transmission Line Corridor: 610 ha (1500 acres)

Population within an 80-km (50-mile) radius:

1990	2000	2010	2030	2050
2,480,000	2,530,000	2,570,000	2,670,000	2,770,000

Pilgrim Nuclear Power Station

[**Prev** | **Next** | **Top of file**]

Location:

Plymouth County, Massachusetts 6 km (4 miles) SE of Plymouth latitude 41.9444°N; longitude 70.5794°W

Licensee: Boston Edison Co.

Unit Information	Unit 1
Docket Number	50-293
Construction Permit	1968

Operating License	1972
Commercial Operation	1972
License Expiration	2012
Licensed Thermal Power [MW(t)]	1998
Design Electrical Rating [net MW(e)]	655
Type of Reactor	BWR
Nuclear Steam Supply System Vendor	GE

Cooling Water System

Type: once through

Source: Cape Cod Bay

Source Temperature Range: 0-28°C (32-83°F)

Condenser Flow Rate: 19.6 m3/s (311,000 gal/min)

Design Condenser Temperature Rise: 16°C (29°F)

Intake Structure: concrete structure at edge of bay protected by a breakwater

Discharge Structure: canal about 260 m (850 ft) long

Site Information

Total Area: 209 ha (517 acres)

Exclusion Distance: 0.53 km (0.33 mile)

Low Population Zone: 6.76 km (4.20 miles)

Nearest City: Brockton; 1980 population: 95,172

Site Topography: flat to rolling

Surrounding Area Topography: rolling to hilly

Land Use within 8 km (5 miles): mostly undeveloped

Nearby Features:

The nearest town is Plymouth about 6 km (4 miles) NW. Miles Standish State Forest is about 10 km (6 miles) SW. Plymouth Rock and Plimoth Plantation historical sites are about 8 km (5 miles) W.

Area of Transmission Line Corridor: 70 ha (174 acres)

Population within an 80-km (50-mile) radius:

1990	2000	2010	2030	2050
4,440,000	4,590,000	4,690,000	4,880,000	5,080,000

Point Beach Nuclear Plant

[**Prev** | **Next** | **Top of file**]

Location:

Manitowoc County, Wisconsin 21 km (13 miles) NNW of Manitowoc latitude 44.2808°N; longitude 87.5361°W

Licensee: Wisconsin Electric Power Co.

Unit Information	Unit 1	Unit 2
Docket Number	50-266	50-301
Construction Permit	1967	1968
Operating License	1970	1972
Commercial Operation	1970	1972
License Expiration	2010	2012
Licensed Thermal Power [MW(t)]	1519	1519
Design Electrical Rating [net MW(e)]	497	497
Type of Reactor	PWR	PWR
Nuclear Steam Supply System Vendor	WEST	WEST

Cooling Water System

Type: once through

Source: Lake Michigan

Source Temperature Range:

Condenser Flow Rate: 22 m3/s (350,000 gal/min) each unit

Design Condenser Temperature Rise: 10.7°C (19.3°F)

Intake Structure: Structure is 533 m (1750 ft) from shore in 7-m (22-ft) deep water. Top elevation is 2.4 m (8 ft) above normal lake level. Intake to plant is through 38 pipes located 1.5 m (5 ft) above lake bed.

Discharge Structure: 2 flumes projecting about 46 m (150 ft) from shore

Site Information

Total Area: 836 ha (2065 acres)

Exclusion Distance: 1.19-km (0.74-mile) radius

Low Population Zone: 9.01 km (5.60 miles)

Nearest City: Green Bay; 1980 population: 87,899

Site Topography: flat to rolling

Surrounding Area Topography: rolling

Land Use within 8 km (5 miles): agricultural, dairy farming, vegetable canning

Nearby Features:

The nearest town is Two Creeks 1.6 km (1 mile) NNW. Point Beach State Forest is just S of site. The Kewaunee Nuclear Power Plant is about 8 km (5 miles) N.

Area of Transmission Line Corridor: 1344 ha (3321 acres)

Population within an 80-km (50-mile) radius:

1990	2000	2010	2030	2050
610,000	640,000	660,000	700,000	740,000

Prairie Island Nuclear Generating Plant

[**Prev** | **Next** | **Top of file**]

Location:

Goodhue County, Minnesota 45 km (28 miles) SE of Minneapolis latitude 44.6219°N; longitude 92.6331°W

Licensee: Northern States Power Co.

Unit Information	Unit 1	Unit 2
Docket Number	50-282	50-306
Construction Permit	1968	1968
Operating License	1973	1974
Commercial Operation	1973	1974
License Expiration	2013	2014
Licensed Thermal Power [MW(t)]	1650	1650
Design Electrical Rating [net MW(e)]	530	530
Type of Reactor	PWR	PWR
Nuclear Steam Supply System Vendor	WEST	WEST

Cooling Water System

Type: mechanical draft and/or once cooling towers

Source: Mississippi River

Source Temperature Range: 0-28°C (32-82°F)

Condenser Flow Rate: 18.6 m3/s (294,000 gal/min) each unit

Design Condenser Temperature Rise: 15°C (27°F)

Intake Structure: short canal

Discharge Structure: Discharges to a basin then to towers and/or river.

Site Information

Total Area: 230 ha (560 acres)

Exclusion Distance: 0.69-km (0.43-mile) radius

Low Population Zone: 2.41 km (1.50 miles)

Nearest City: Minneapolis; 1980 population: 370,951

Site Topography: flat to rolling

Surrounding Area Topography: rolling

Land Use within 8 km (5 miles): dairy farming and agricultural

Nearby Features:

The business district of the town of Red Wing is 9.6 km (6 miles) SE. A railroad line is just SW of the site.

Area of Transmission Line Corridor: 394 ha (973 acres)

Population within an 80-km (50-mile) radius:

1990	2000	2010	2030	2050
2,290,000	2,490,000	2,650,000	2,960,000	3,310,000

Quad-Cities Station

[**Prev** | **Next** | **Top of file**]

Location:

Rock Island County, Illinois 32 km (20 miles) NE of Moline latitude 41.7261°N; longitude 90.3100°W

Licensee: Commonwealth Edison Co.

Unit Information	Unit 1	Unit 2
Docket Number	50-254	50-265
Construction Permit	1967	1967
Operating License	1972	1972
Commercial Operation	1973	1973
License Expiration	2012	2012
Licensed Thermal Power [MW(t)]	2511	2511
Design Electrical Rating [net MW(e)]	789	789
Type of Reactor	BWR	BWR
Nuclear Steam Supply System Vendor	GE	GE

Cooling Water System

Type: once through

Source: Mississippi River

Source Temperature Range: 0-29°C (32-85°F)

Condenser Flow Rate: 29.7 m3/s (471,000 gal/min) each unit

Design Condenser Temperature Rise: 13°C (24°F)

Intake Structure: crib house at edge of river

Discharge Structure: 4300-m (14,000-ft) spray canal

Site Information

Total Area: 317 ha (784 acres)

Exclusion Distance: 0.80 km (0.50 mile)

Low Population Zone: 4.83 km (3.00 miles)

Nearest City: Davenport, Iowa; 1980 population: 103,264

Site Topography: flat

Surrounding Area Topography: flat

Land Use within 8 km (5 miles): agricultural and small industrial park

Nearby Features:

The nearest town is Folletts 5 km (3 miles) NW. The Rock Island Railroad is 3 km (2 miles) W and the Chicago, Milwaukee, and St. Paul Railroad is 1.6 km (1 mile) E. The Rock Island Arsenal is about 24 km (15 miles) SW.

Area of Transmission Line Corridor: 570 ha (1400 acres)

Population within an 80-km (50-mile) radius:

1990	2000	2010	2030	2050
740,000	760,000	780,000	810,000	850,000

Rancho Seco Nuclear Generating Station

[**Prev** | **Next** | **Top of file**]

Location:

Sacramento County, California 40 km (25 miles) SE of Sacramento latitude 38.3444°N; longitude 121.1200°W

Licensee: Sacramento Municipal Utility District

Unit Information	Unit 1
Docket Number	50-312
Construction Permit	1968
Operating License	1974
Commercial Operation	1975
License Expiration	2014
Licensed Thermal Power [MW(t)]	2772
Design Electrical Rating [net MW(e)]	918
Type of Reactor	PWR
Nuclear Steam Supply System Vendor	B&W

Cooling Water System

Type: natural draft cooling

Source: Folsom Canal towers

Source Temperature Range: 10-21°C (50-70°F)

Condenser Flow Rate: 28.1 m3/s (446,000 gal/min)

Design Condenser Temperature Rise: 16°C (28°F)

Intake Structure: 5.6-km (3.5-mile) pipeline from Folsom Canal

Discharge Structure: 2.4-km (1.5-mile) pipeline to reservoir

Site Information

Total Area: 1000 ha (2480 acres)

Exclusion Distance: 0.64-km (0.40-mile) radius

Low Population Zone: 8.05 km (5.00 miles)

Nearest City: Sacramento; 1980 population: 275,741

Site Topography: flat to rolling

Surrounding Area Topography: rolling

Land Use within 8 km (5 miles): agricultural and grazing land

Nearby Features:

The nearest town is Clay 3 km (2 miles) WSW. The Southern Pacific Railroad is about 1.6 km (1 mile) N.

Area of Transmission Line Corridor: 350 ha (870 acres)

Population within an 80-km (50-mile) radius:

1990	2000	2010	2030	2050
2,010,000	2,200,000	2,360,000	2,590,000	2,850,000

Note: This plant was shut down as the result of a public referendum in June 1989.

River Bend Station

[**Prev** | **Next** | **Top of file**]

Location:

West Feliciana County, Louisiana 39 km (24 miles) NNW of Baton Rouge latitude 30.7569°N; longitude 91.3314°W

Licensee: Gulf States Utility Co.

Unit Information	Unit 1
Docket Number	50-458
Construction Permit	1977
Operating License	1985
Commercial Operation	1986
License Expiration	2025

Licensed Thermal Power [MW(t)]	2894
Design Electrical Rating [net MW(e)]	936
Type of Reactor	BWR
Nuclear Steam Supply System Vendor	GE

Cooling Water System

Type: mechanical draft cooling towers

Source: Mississippi River

Source Temperature Range: Condenser Flow Rate: 32.084 m3/s (508,470 gal/min)

Design Condenser Temperature Rise: 15°C (27°F)

Intake Structure: at river bank

Discharge Structure: pipe extending into the river

Site Information

Total Area: 1352 ha (3342 acres)

Exclusion Distance: 0.92-km (0.57-mile) radius

Low Population Zone: 4.02-km (2.50-mile) radius

Nearest City: Baton Rouge; 1980 population: 220,394

Site Topography: flat

Surrounding Area Topography: flat to rolling

Land Use within 8 km (5 miles): agricultural and forest

Nearby Features:

The nearest town is St. Francisville 5 km (3 miles) NW. Audubon Memorial State Park is about 5 km (3 miles) NNE. The Illinois Central Railroad crosses the site.

Area of Transmission Line Corridor: 410 ha (1014 acres)

Population within an 80-km (50-mile) radius:

1990	2000	2010	2030	2050
800,000	860,000	920,000	1,010,000	1,110,000

H. B. Robinson Plant

[**Prev** | **Next** | **Top of file**]

Location:

Darlington County, South Carolina 42 km (26 miles) NE of Florence latitude 34.4025°N; longitude 80.1586°W

Licensee: Carolina Power and Light Co.

Unit Information	Unit 2
Docket Number	50-261
Construction Permit	1967
Operating License	1970
Commercial Operation	1971
License Expiration	2010
Licensed Thermal Power [MW(t)]	2300
Design Electrical Rating [net MW(e)]	700
Type of Reactor	PWR
Nuclear Steam Supply System Vendor	WEST

Cooling Water System

Type: once through

Source: Lake Robinson

Source Temperature Range: 8-29°C (46-85°F)

Condenser Flow Rate: 30.42 m3/s (482,100 gal/min)

Design Condenser Temperature Rise: 10°C (18°F)

Intake Structure: concrete structure on edge of lake

Discharge Structure: 6.8-km (4.2-mile) canal discharging about 6 km (4 miles) upstream from intake

Site Information

Total Area: 2000 ha (5000 acres)

Exclusion Distance: 0.43-km (0.27-mile) radius

Low Population Zone: 7.24 km (4.50 miles)

Nearest City: Columbia; 1980 population: 101,229

Site Topography: rolling

Surrounding Area Topography: rolling

Land Use within 8 km (5 miles): agricultural and wooded, some recreational

Nearby Features:

The nearest town is Hartsville 8 km (5 miles) SE. Unit 1 is an adjacent 185 MW(e) capacity coal-fired plant. Sand Hills State Forest is about 6 km (4 miles) N. The Carolina

Sandhills National Wildlife Refuge is about 8 km (5 miles) NNW.

Area of Transmission Line Corridor: 414 ha (1024 acres)

Population within an 80-km (50-mile) radius:

1990	2000	2010	2030	2050
740,000	810,000	880,000	990,000	1,120,000

Salem Nuclear Generating Station

[**Prev** | **Next** | **Top of file**]

Location:

Salem County, New Jersey 13 km (8 miles) SW of Salem latitude 39.4628°N; longitude 75.5358°W

Licensee: Public Service Electric and Gas Co.

Unit Information	Unit 1	Unit 2
Docket Number	50-272	50-311
Construction Permit	1968	1968
Operating License	1976	1981
Commercial Operation	1977	1981
License Expiration	2016	2021
Licensed Thermal Power [MW(t)]	3411	3411
Design Electrical Rating [net MW(e)]	1115	1115
Type of Reactor	PWR	PWR
Nuclear Steam Supply System Vendor	WEST	WEST

Cooling Water System

Type: once through

Source: Delaware River

Source Temperature Range: 1-26°C (33-79°F)

Condenser Flow Rate: 69 m3/s (1,100,000 gal/min) each unit

Design Condenser Temperature Rise: 7.6°C (13.6°F)

Intake Structure: 12 bay structure on edge of river

Discharge Structure: submerged pipes extending 150 m (500 ft) into the river

Site Information

Total Area: 280 ha (700 acres)

Exclusion Distance: 1.29 km (0.80 mile)

Low Population Zone: 8.05 km (5.00 miles)

Nearest City: Wilmington, Delaware; 1980 population: 70,195

Site Topography: flat

Surrounding Area Topography: flat

Land Use within 8 km (5 miles): tidal marshes and grasslands

Nearby Features:

The nearest town is Port Penn about 6 km (4 miles) NW in Delaware. The nearest railroad is 13 km (8 miles) NE. The plant is on the same site as the Hope Creek Generating Station (nuclear).

Area of Transmission Line Corridor: 1600 ha (3900 acres)

Population within an 80-km (50-mile) radius:

1990	2000	2010	2030	2050
4,810,000	4,910,000	5,000,000	5,180,000	5,370,000

San Onofre Nuclear Generating Station

[**Prev** | **Next** | **Top of file**]

Location:

San Diego County, California 8 km (5 miles) SE of San Clemente latitude 33.3703°N; longitude 117.5569°W

Licensee: Southern California Edison Co.

Unit Information	Unit 1	Unit 2	Unit 3
Docket Number	50-206	50-361	50-362
Construction Permit	1964	1973	1973
Operating License	1967	1982	1983
Commercial Operation	1968	1983	1984
License Expiration	2007	2022	2023
Licensed Thermal Power [MW(t)]	1347	3390	3390
Design Electrical Rating [net MW(e)]	436	1070	1080
Type of Reactor	PWR	PWR	PWR
Nuclear Steam Supply System Vendor	WEST	CE	CE

Cooling Water System

Type: once through

Source: Pacific Ocean

Source Temperature Range: 12-23°C (54-73°F)

Condenser Flow Rate: 21.51 m3/s (340,900 gal/min) for Unit 1 50.3 m3/s (797,000 gal/min) each for Units 2 & 3

Design Condenser Temperature Rise: 11°C (19°F) for Unit 1 11°C (20°F) For Units 2 & 3

Intake Structure: Unit 1--intake 980 m (3200 ft) from shore; Units 2 & 3--velocity-cap structure about 1040 m (3400 ft) from shore in water 9 m (30 ft) deep

Discharge Structure: Unit 1-discharged 790 m (2600 ft) from shore in water 7.3 m (24 ft) deep; Units 2 & 3- diffuser port systems extending 1160 m to 2590 m (3800 to 8500 ft) from shore

Site Information

Total Area: 34 ha (84 acres)

Exclusion Distance: 0.60 (0.37 mile)

Low Population Zone: 3.14 km (1.95 miles)

Nearest City: Oceanside; 1980 population: 76,698

Site Topography: narrow sloping coastal plain and sea cliffs

Surrounding Area Topography: hilly

Land Use within 8 km (5 miles): military reservation

Nearby Features:

The nearest town is San Clemente 8 km (5 miles) NW. The site is surrounded by Camp Pendleton Marine Base. Camps on the base are 2.4 km (1.5 miles) or more from the site. U.S. Highway I-5 and the Atchison, Topeka, and Santa Fe Railroad are adjacent to the site to the east.

Area of Transmission Line Corridor: 450 ha (1100 acres)

Population within an 80-km (50-mile) radius:

1990	2000	2010	2030	2050
5,430,000	5,950,000	6,400,000	7,050,000	7,760,000

Seabrook Station

[**Prev** | **Next** | **Top of file**]

Location:

Rockingham County, New Hampshire 21 km (13 miles) SSW of Portsmouth latitude 42.8983°N; longitude 70.8497°W

Licensee: Public Service Company of New Hampshire

Unit Information	Unit 1
Docket Number	50-443
Construction Permit	1976
Operating License	1990
Commercial Operation	--
License Expiration	2032
Design Thermal Power [MW(t)]	3411
Design Electrical Rating [net MW(e)]	1198
Type of Reactor	PWR
Nuclear Steam Supply System Vendor	WEST

Cooling Water System

Type: once through

Source: Atlantic Ocean

Source Temperature Range: 3-13°C (37-55°F)

Condenser Flow Rate: 25.2 m3/s (399,000 gal/min)

Design Condenser Temperature Rise: 21°C (38°F)

Intake Structure: 3 structures 15 m (50 ft) below sea level with pipeline submerged about 50 m (175 ft) below mean sea level and extending about 2100 m (7000 ft) offshore

Discharge Structure: submerged pipeline ending in a diffuser located about 1675 m (5500 ft) offshore and about 1525 m (5000 ft) S of intake

Site Information

Total Area: 363 ha (896 acres)

Exclusion Distance: 0.92-km (0.57-mile) minimum

Low Population Zone: 2.01 km (1.25 miles)

Nearest City: Lawrence, Massachusetts; 1980 population: 63,175

Site Topography: flat

Surrounding Area Topography: flat to rolling

Land Use within 8 km (5 miles): undeveloped salt-water marshes with some industrial, residential, and recreational

Nearby Features:

The nearest town is Seabrook 1.6 km (1 mile) W. U.S. Highway I-95 is about 1.6 km (1 mile) W. The Boston and Maine Railroad is adjacent to the site. Hampton Beach State Park is 3 km (2 miles) E.

Area of Transmission Line Corridor: 625 ha (1545 acres)

Population within an 80-km (50-mile) radius:

1990	2000	2010	2030	2050
3,760,000	3,900,000	4,010,000	4,220,000	4,450,000

Sequoyah Nuclear Plant

[**Prev** | **Next** | **Top of file**]

Location:

Hamilton County, Tennessee 16 km (10 miles) NE of Chattanooga latitude 35.2233°N; longitude 85.0878°W

Licensee: Tennessee Valley Authority

Unit Information	Unit 1	Unit 2
Docket Number	50-327	50-328
Construction Permit	1970	1970

Operating License	1980	1981
Commercial Operation	1981	1982
License Expiration	2020	2021
Licensed Thermal Power [MW(t)]	3411	3411
Design Electrical Rating [net MW(e)]	1148	1148
Type of Reactor	PWR	PWR
Nuclear Steam Supply System Vendor	WEST	WEST

Cooling Water System

Type: once through and/or natural draft cooling towers

Source: Chickamauga Lake

Source Temperature Range: 6-28°C (42-83°F)

Condenser Flow Rate: 32.9 m3/s (522,000 gal/min) each unit

Design Condenser Temperature Rise: 17°C (30°F)

Intake Structure: intake from lake

Discharge Structure: discharge to lake

Site Information

Total Area: 212 ha (525 acres)

Exclusion Distance: 0.56 km (0.35 mile)

Low Population Zone: 4.83 km (3.00 miles)

Nearest City: Chattanooga; 1980 population: 169,514

Site Topography: rolling

Surrounding Area Topography: hilly

Land Use within 8 km (5 miles): some residential and recreational

Nearby Features:

The nearest town is Shady Grove about 3 km (2 miles) NW. Harrison Bay State Park is 5 km (3 miles) S. The Volunteer Ordnance Works is about 15 km (9 miles) S. Chickamauga Lake is part of the Tennessee River.

Area of Transmission Line Corridor: 510 ha (1260 acres)

Population within an 80-km (50-mile) radius:

1990	2000	2010	2030	2050
930,000	1,020,000	1,090,000	1,210,000	1,330,000

Shoreham Nuclear Power Station

[**Prev** | **Next** | **Top of file**]

Location:

Suffolk County, New York 19 km (12 miles) NW of Riverhead latitude 40.9583°N; longitude 72.8667°W

Licensee: Long Island Lighting Co.

Unit Information	
Docket Number	50-322
Construction Permit	1973
Operating License	1989
Commercial Operation	--
License Expiration	2013
Design Thermal Power [MW(t)]	2436
Design Electrical Rating [net MW(e)]	819
Type of Reactor	BWR
Nuclear Steam Supply System Vendor	GE

Cooling Water System

Type: once through

Source: Long Island Sound

Source Temperature Range: 2-23°C (36-74°F)

Condenser Flow Rate: 36.19 m3/s (573,600 gal/min)

Design Condenser Temperature Rise: 11°C (20°F)

Intake Structure: intake canal

Discharge Structure: diffuser system

Site Information

Total Area: 202 ha (499 acres)

Exclusion Distance: 0.31 km (0.19 mile)

Low Population Zone: 3.22 km (2.00 miles)

Nearest City: New Haven, Connecticut; 1980 population: 126,089

Site Topography: flat to rolling

Surrounding Area Topography: rolling to hilly

Land Use within 8 km (5 miles): some residential and recreational

Nearby Features:

The nearest town is Shoreham 3 km (2 miles) W. Brookhaven State Park is about 3 km (2 miles) S. Brookhaven National Laboratory is about 11 km (7 miles) S. Grumman Peconic River Airport is about 10 km (6 miles) SE. Wildwood State Park is about 6 km (4 miles) E.

Area of Transmission Line Corridor: 16 ha (39 acres)

Population within an 80-km (50-mile) radius:

1990	2000	2010	2030	2050
5,390,000	5,400,000	5,420,000	5,550,000	5,690,000

Note: This plant has not been allowed to operate due to litigation concerning emergency response.

South Texas Project

[**Prev** | **Next** | **Top of file**]

Location:

Matagorda County, Texas 19 km (12 miles) SSW of Bay City latitude 28.7950°N; longitude 96.0481°W

Licensee: Houston Lighting and Power Co.

Unit Information	Unit 1	Unit 2
Docket Number	50-498	50-499
Construction Permit	1975	1975
Operating License	1988	1989
Commercial Operation	1988	1989
License Expiration	2028	2029
Licensed Thermal Power [MW(t)]	3800	3800
Design Electrical Rating [net MW(e)]	1250	1250
Type of Reactor	PWR	PWR
Nuclear Steam Supply System Vendor	WEST	WEST

Cooling Water System

Type: closed cycle cooling reservoir

Source: Colorado River

Source Temperature Range: 14-29°C (58-84°F)

Condenser Flow Rate: 57.26 m3/s (907,400 gal/min) each unit

Design Condenser Temperature Rise: 11°C (19°F)

Intake Structure: on bank of Colorado River

Discharge Structure: on bank of Colorado River

Site Information

Total Area: 4998 ha (12,350 acres)

Exclusion Distance: 1.43-km (0.89-mile) minimum

Low Population Zone: 4.83 km (3.00 miles)

Nearest City: Galveston; 1980 population: 61,902

Site Topography: flat

Surrounding Area Topography: flat

Land Use within 8 km (5 miles): agricultural

Nearby Features:

The nearest town is Matagorda 13 km (8 miles) SE. The Missouri Pacific Railroad is about 8 km (5 miles) NNE. A 40-cm (16-inch) natural gas pipeline is about 3 km (2 miles) NW.

Area of Transmission Line Corridor: 1932 ha (4773 acres)

Population within an 80-km (50-mile) radius:

1990	2000	2010	2030	2050
270,000	300,000	320,000	350,000	380,000

St. Lucie Plant

[**Prev** | **Next** | **Top of file**]

Location:

St. Lucie County, Florida 11 km (7 miles) SE of Fort Pierce latitude 27.3486°N; longitude 80.2464°W

Licensee: Florida Power and Light Co.

Unit Information	Unit 1	Unit 2
Docket Number	50-335	50-389
Construction Permit	1970	1977
Operating License	1976	1983
Commercial Operation	1976	1983
License Expiration	2016	2023
Licensed Thermal Power [MW(t)]	2700	2700
Design Electrical Rating [net MW(e)]	830	830
Type of Reactor	PWR	PWR
Nuclear Steam Supply System Vendor	CE	CE

Cooling Water System

Type: once through

Source: Atlantic Ocean

Source Temperature Range: 31°C (87°F) maximum

Condenser Flow Rate: 30.96 m3/s (490,600 gal/min) each unit

Design Condenser Temperature Rise: 14°C (25°F)

Intake Structure: 370 m (1200 ft) offshore

Discharge Structure: Unit 1 is 370 m (1200 ft) offshore; Unit 2 is a multiport discharge 900 m (3000 ft) offshore; both structures are 730 (2400 ft) from the intake structures.

Site Information

Total Area: 458 ha (1132 acres)

Exclusion Distance: 1.56-km (0.97-mile) radius

Low Population Zone: 1.61 km (1.00 mile)

Nearest City: West Palm Beach; 1980 population: 62,530

Site Topography: flat land and water

Surrounding Area Topography: flat

Land Use within 8 km (5 miles): expanding residential and some recreational

Nearby Features:

The nearest town is Ankona 3 km (2 miles) W. The Florida East Coast Railroad is about 3 km (2 miles) W. The plant is on Hutchinson Island which is separated from the mainland by the Indian River which is part of the intercoastal waterway. A causeway to the mainland is about 10 km (6 miles) SSE.

Area of Transmission Line Corridor: 310 ha (760 acres)

Population within an 80-km (50-mile) radius:

1990	2000	2010	2030	2050
690,000	780,000	860,000	1,040,000	1,250,000

Virgil C. Summer Nuclear Station

[**Prev** | **Next** | **Top of file**]

Location:

Fairfield County, South Carolina 42 km (26 miles) NW of Columbia latitude 34.2958°N; longitude 81.3203°W

Licensee: South Carolina Electric and Gas Co.

Unit Information	Unit 1
Docket Number	50-395
Construction Permit	1973
Operating License	1982
Commercial Operation	1984
License Expiration	2022
Licensed Thermal Power [MW(t)]	2775
Design Electrical Rating [net MW(e)]	900
Type of Reactor	PWR
Nuclear Steam Supply System Vendor	WEST

Cooling Water System

Type: once through

Source: Lake Monticello

Source Temperature Range: 11-33°C (52-91°F)

Condenser Flow Rate: 30.6 m3/s (485,000 gal/min)

Design Condenser Temperature Rise: 14°C (25°F)

Intake Structure: intake at shoreline

Discharge Structure: discharge to lake via a discharge pond

Site Information

Total Area: 890 ha (2200 acres)

Exclusion Distance: 1.63-km (1.01-mile) radius

Low Population Zone: 4.83 (3.00 miles)

Nearest City: Columbia; 1980 population: 101,229

Site Topography: rolling

Surrounding Area Topography: rolling to hilly

Land Use within 8 km (5 miles): mostly wooded with some agricultural

Nearby Features:

The nearest town is Jenkinsville 5 km (3 miles) SE. U.S. Highway I-26 is 11 km (7 miles) SSW. The Southern Railroad is 1.6 km (1 mile) W. The Fairfield pumped storage hydrostation is about 1.6 km (1 mile) NW and uses Lake Monticello as well as the Parr Reservoir.

Area of Transmission Line Corridor: 638 ha (1576 acres)

Population within an 80-km (50-mile) radius:

1990	2000	2010	2030	2050
910,000	990,000	1,080,000	1,220,000	1,390,000

Surry Power Station

[**Prev** | **Next** | **Top of file**]

Location:

Surry County, Virginia 27 km (17 miles) NW of Newport News latitude 37.1656°N; longitude 76.6983°W

Licensee: Virginia Electric and Power Co.

Unit Information	Unit 1	Unit 2
Docket Number	50-280	50-281

Construction Permit	1968	1968
Operating License	1972	1973
Commercial Operation	1972	1973
License Expiration	2012	2013
Licensed Thermal Power [MW(t)]	2441	2441
Design Electrical Rating [net MW(e)]	788	788
Type of Reactor	PWR	PWR
Nuclear Steam Supply System Vendor	WEST	WEST

Cooling Water System

Type: once through

Source: James River

Source Temperature Range: 2-29°C (35-84°F)

Condenser Flow Rate: 53 m3/s (840,000 gal/min) each unit

Design Condenser Temperature Rise: 8°C (14°F)

Intake Structure: 2.7-km (1.7-mile) concrete canal

Discharge Structure: 880-m (2900-ft) canal

Site Information

Total Area: 340 ha (840 acres)

Exclusion Distance: 0.50 km (0.31 mile)

Low Population Zone: 4.83 km (3.00 miles)

Nearest City: Newport News; 1980 population: 144,903

Site Topography: flat

Surrounding Area Topography: flat

Land Use within 8 km (5 miles): agriculture, military reservations, recreation

Nearby Features:

The nearest town is Scotland 8 km (5 miles) W. Jamestown Island, a Federal park, is 6 km (4 miles) NW. Chippokes Plantation, a state park, is 5 km (3 miles) WSW. Jamestown National Historical Park is 8 km (5 miles) WNW. Colonial Williamsburg is 11 km (7 miles) NNW. These numerous attractions bring many visitors to the area. Adjacent to the site on the north is Hog Island, a waterfowl refuge. U.S. Highway I-64 is 19 km (12 miles) NW.

Area of Transmission Line Corridor: 1790 ha (4420 acres)

Population within an 80-km (50-mile) radius:

1990	2000	2010	2030	2050
1,900,000	2,080,000	2,240,000	2,510,000	2,800,000

Susquehanna Steam Electric Station

[**Prev** | **Next** | **Top of file**]

Location:

Luzerne County, Pennsylvania 11 km (7 miles) NE of Berwick latitude 41.0922°N; longitude 76.1467°W

Licensee: Pennsylvania Power and Light Co.

Unit Information	Unit 1	Unit 2
Docket Number	50-387	50-388
Construction Permit	1973	1973
Operating License	1982	1984
Commercial Operation	1983	1985
License Expiration	2022	2024
Licensed Thermal Power [MW(t)]	3293	3293
Design Electrical Rating [net MW(e)]	1050	1050
Type of Reactor	BWR	BWR
Nuclear Steam Supply System Vendor	GE	GE

Cooling Water System

Type: natural draft cooling towers

Source: Susquehanna River

Source Temperature Range:

Condenser Flow Rate: 28.3 m3/s (448,000 gal/min) each unit

Design Condenser Temperature Rise: 8°C (14°F)

Intake Structure: at river bank

Discharge Structure: diffuser pipe 73 m (240 ft) from river bank

Site Information

Total Area: 435 ha (1075 acres)

Exclusion Distance: 0.55-km (0.34-mile) radius

Low Population Zone: 4.83 km (3.00 miles)

Nearest City: Wilkes-Barre; 1980 population 51,551

Site Topography: rolling

Surrounding Area Topography: hilly with flat river valley

Land Use within 8 km (5 miles): wooded and agricultural

Nearby Features:

The nearest town is Beach Haven about 1.6 km (1 mile) SW. U.S. Highway I-80 is 8 km (5 miles) S. The ConRail Railroad is 0.8 km (0.5) mile E and the Delaware and Hudson Railroad is 1.6 km (1 mile) E.

Area of Transmission Line Corridor: 730 ha (1800 acres)

Population within an 80-km (50-mile) radius:

1990	2000	2010	2030	2050
1,500,000	1,510,000	1,530,000	1,550,000	1,580,000

Three Mile Island Nuclear Station

[**Prev** | **Next** | **Top of file**]

Location:

Dauphin County, Pennsylvania 16 km (10 miles) SE of Harrisburg latitude 40.1531°N; longitude 76.7250°W

Licensee: Metropolitan Edison Co.

Unit Information	Unit 1
Docket Number	50-289
Construction Permit	1968
Operating License	1974
Commercial Operation	1974
License Expiration	2014
Licensed Thermal Power [MW(t)]	2568
Design Electrical Rating [net MW(e)]	819
Type of Reactor	PWR
Nuclear Steam Supply System Vendor	B&W

Cooling Water System

Type: natural draft cooling towers

Source: Susquehanna River

Source Temperature Range: 1-29°C (33-85°F)

Condenser Flow Rate: 27 m3/s (430,000 gal/min)

Design Condenser Temperature Rise:

Intake Structure: concrete structure on river bank

Discharge Structure: discharged at the shoreline

Site Information

Total Area: 191 ha (472 acres)

Exclusion Distance: 0.61-km (0.38-mile) radius

Low Population Zone: 3.22 km (2.00 miles)

Nearest City: Harrisburg; 1980 population: 53,264

Site Topography: flat

Surrounding Area Topography: rolling to hilly

Land Use within 8 km (5 miles): agricultural

Nearby Features:

The nearest town is Middletown 6 km (4 miles) N. Harrisburg-York airport is 13 km (8 miles) WNW. Unit 2 ceased operation after an accident in 1979. Peach Bottom Atomic Power Station is 56 km (35 miles) downstream.

Area of Transmission Line Corridor: 725 ha (1790 acres)

Population within an 80-km (50-mile) radius:

1990	2000	2010	2030	2050
2,170,000	2,210,000	2,240,000	2,290,000	2,350,000

Trojan Nuclear Plant

[**Prev** | **Next** | **Top of file**]

Location:

Columbia County, Oregon 51 km (32 miles) N of Portland latitude 46.0408°N; longitude 122.8844°W

Licensee: Portland General Electric Co.

Unit Information	Unit 1
Docket Number	50-344
Construction Permit	1971
Operating License	1975
Commercial Operation	1976
License Expiration	2015
Licensed Thermal Power [MW(t)]	3411
Design Electrical Rating [net MW(e)]	1130
Type of Reactor	PWR
Nuclear Steam Supply System Vendor	WEST

Cooling Water System

Type: natural draft cooling tower

Source: Columbia River

Source Temperature Range:

Condenser Flow Rate: 27.04 m3/s (428,600 gal/min)

Design Condenser Temperature Rise: 25°C (45°F)

Intake Structure: at river bank

Discharge Structure: submerged pipe extending 110 m (350 ft) from river bank

Site Information

Total Area: 257 ha (635 acres)

Exclusion Distance: 0.66-km (0.41-mile) minimum

Low Population Zone: 4.02-km (2.50-mile) radius

Nearest City: Portland; 1980 population: 368,148

Site Topography: flat to rolling

Surrounding Area Topography: hilly to mountainous

Land Use within 8 km (5 miles): wooded

Nearby Features:

The nearest town is Prescott 0.8 km (0.5 mile) N. The Burlington Northern Railroad is just W of the site. Gifford Pinchot National Forest and Mount St. Helens National Monument are about 48 km (30 miles) ENE.

Area of Transmission Line Corridor: 510 ha (1260 acres)

Population within an 80-km (50-mile) radius:

1990	2000	2010	2030	2050
1,850,000	2,160,000	2,430,000	2,820,000	3,780,000

Turkey Point Plant

[**Prev** | **Next** | **Top of file**]

Location:

Dade County, Florida 40 km (25 miles) S of Miami latitude 25.4350°N; longitude 80.3314°W

Licensee: Florida Power and Light Co.

Unit Information	Unit 3	Unit 4
Docket Number	50-250	50-251
Construction Permit	1967	1967
Operating License	1972	1973
Commercial Operation	1972	1973
License Expiration	2012	2013
Licensed Thermal Power [MW(t)]	2200	2200
Design Electrical Rating [net MW(e)]	693	693
Type of Reactor	PWR	PWR
Nuclear Steam Supply System Vendor	WEST	WEST

Cooling Water System

Type: closed cycle canal

Source: Biscayne Bay

Source Temperature Range: 12-32°C (54-90°F)

Condenser Flow Rate: 39.4 m3/s (624,000 gal/min) each unit

Design Condenser Temperature Rise: 9°C (16°F)

Intake Structure: intake canal and barge canal

Discharge Structure: canal system covering about 1600 ha (4000 acres)

Site Information

Total Area: 9700 ha (24,000 acres)

Exclusion Distance: 1.27 km (0.79 mile)

Low Population Zone: 8.05 km (5.00 miles)

Nearest City: Miami; 1980 population: 346,681

Site Topography: flat

Surrounding Area Topography: flat

Land Use within 8 km (5 miles): mostly undeveloped

Nearby Features:

The nearest town is Florida City about 14 km (9 miles) W. Hawk Missile Base is 1.6 km (1 mile) NW. Homestead recreation park is about 3 km (2 miles) NNW. The Florida East Coast Railroad is about 14 km (9 miles) NW. Units 1 and 2 are coal fired and adjacent to the site.

Area of Transmission Line Corridor: 331 ha (817 acres)

Population within an 80-km (50-mile) radius:

1990	2000	2010	2030	2050
2,700,000	3,070,000	3,420,000	4,160,000	5,050,000

Vermont Yankee Nuclear Power Station

[**Prev** | **Next** | **Top of file**]

Location:

Windham County, Vermont 8 km (5 miles) S of Brattleboro latitude 42.7803°N; longitude 72.5158°W

Licensee: Vermont Yankee Nuclear Power Corp.

Unit Information	Unit 1
Docket Number	50-271
Construction Permit	1967
Operating License	1973

Commercial Operation	1972
License Expiration	2013
Licensed Thermal Power [MW(t)]	1593
Design Electrical Rating [net MW(e)]	540
Type of Reactor	BWR
Nuclear Steam Supply System Vendor	GE

Cooling Water System

Type: once through & helper towers

Source: Connecticut River

Source Temperature Range: 0-23°C (32-74°F)

Condenser Flow Rate: 23.1 m3/s (366,000 gal/min)

Design Condenser Temperature Rise: 11°C (20°F)

Intake Structure: concrete structure at edge of river

Discharge Structure: aerating structure discharging at edge of river

Site Information

Total Area: 50.6 ha (125 acres)

Exclusion Distance: 0.27 km (0.17 mile)

Low Population Zone: 8.05 km (95.00 miles)

Nearest City: Holyoke, Massachusetts: 1980 population: 44,678

Site Topography: flat

Surrounding Area Topography: rolling to hilly

Land Use within 8 km (5 miles): mostly wooded, some agricultural and industrial

Nearby Features:

The nearest town is Vernon about 1.6 km (1 mile) W. Vernon Dam is 1 km (0.7 mile) downstream from the site. The Yankee Nuclear Power Station is about 32 km (20 miles) WSW.

Area of Transmission Line Corridor: 627 ha (1550 acres)

Population within an 80-km (50-mile) radius:

1990	2000	2010	2030	2050
1,510,000	1,580,000	1,620,000	1,710,000	1,800,000

Vogtle Electric Generating Plant

[**Prev** | **Next** | **Top of file**]

Location:

Burke County, Georgia 42 km (26 miles) SE of Augusta latitude 33.1414°N; longitude 81.7625°W

Licensee: Georgia Power Co.

Unit Information	Unit 1	Unit 2
Docket Number	50-424	50-425
Construction Permit	1974	1974
Operating License	1987	1989
Commercial Operation	1987	1989
License Expiration	2027	2029
Licensed Thermal Power [MW(t)]	3411	3411
Design Electrical Rating [net MW(e)]	1101	1160
Type of Reactor	PWR	PWR
Nuclear Steam Supply System Vendor	WEST	WEST

Cooling Water System

Type: natural draft cooling towers

Source: Savannah River

Source Temperature Range: 4-30°C (39-86°F)

Condenser Flow Rate: 32.16 m3/s (509,600 gal/min) each unit

Design Condenser Temperature Rise: 18°C (33°F)

Intake Structure: at river bank

Discharge Structure: single-point discharge pipe near the shoreline

Site Information

Total Area: 1282 ha (3169 acres)

Exclusion Distance: 1.09-km (0.68-mile) minimum

Low Population Zone: 3.22-km (2.00-mile) radius

Nearest City: Augusta; 1980 population: 47,532

Site Topography: rolling

Surrounding Area Topography: rolling, river flood plain

Land Use within 8 km (5 miles): Department of Energy Savannah River Plant, some farming and wooded

Nearby Features:

The nearest town is Shell Bluff about 11 km (7 miles) W. The Seaboard Coast Line Railroad is about 6 km (4 miles) NE. The Department of Energy Savannah River Plant is about 16 km (10 miles) NNE.

Area of Transmission Line Corridor:

Population within an 80-km (50-mile) radius:

1990	2000	2010	2030	2050
630,000	690,000	750,000	840,000	930,000

Washington Nuclear Project 2 (WNP-2)

[**Prev** | **Next** | **Top of file**]

Location:

Benton County, Washington 19 km (12 miles) NW of Richland latitude 46.4714°N; longitude 119.3331°W

Licensee: Washington Public Power Supply System

Unit Information	Unit 2
Docket Number	50-397
Construction Permit	1973
Operating License	1984
Commercial Operation	1984
License Expiration	2024
Licensed Thermal Power [MW(t)]	3323
Design Electrical Rating [net MW(e)]	1100
Type of Reactor	BWR
Nuclear Steam Supply System Vendor	GE

Cooling Water System

Type: mechanical draft cooling towers

Source: Columbia River

Source Temperature Range: 3-18°C (38-64°F)

Condenser Flow Rate: 35 m3/s (550,000 gal/min)

Design Condenser Temperature Rise: 15.9°C (28.7°F)

Intake Structure: 2 perforated pipe inlets supported offshore above the river bed 270 m (900 ft) from pump structure on river bank

Discharge Structure: buried 5-km (3-mile) pipeline terminating at the river bed 53 m (175 ft) from the shoreline

Site Information

Total Area: on Department of Energy Hanford Reservation

Exclusion Distance: 1.95-km (1.21-mile) radius

Low Population Zone: 4.83 km (3.00 miles)

Nearest City: Spokane; 1980 population: 171,300

Site Topography: flat

Surrounding Area Topography: flat

Land Use within 8 km (5 miles): Hanford Reservation and agricultural

Nearby Features:

The nearest town is Richland 14 km (9 miles) S. The site is in the SE part of the Hanford Reservation.

Area of Transmission Line Corridor: on Hanford Reservation

Population within an 80-km (50-mile) radius:

1990	2000	2010	2030	2050
280,000	310,000	330,000	370,000	410,000

Waterford Steam Electric Station

[**Prev** | **Next** | **Top of file**]

Location:

St. Charles County, Louisiana 32 km (20 miles) W of New Orleans latitude 29.9947°N; longitude 90.4711°W

Licensee: Louisiana Power and Light Co.

Unit Information	Unit 3
Docket Number	50-382
Construction Permit	1974
Operating License	1985
Commercial Operation	1985
License Expiration	2025
Licensed Thermal Power [MW(t)]	3390
Design Electrical Rating [net MW(e)]	1104
Type of Reactor	PWR
Nuclear Steam Supply System Vendor	CE

Cooling Water System

Type: once through

Source: Mississippi River

Source Temperature Range: 8-28°C (46-82°F)

Condenser Flow Rate: 61.53 m3/s (975,100 gal/min)

Design Condenser Temperature Rise: 9°C (16°F)

Intake Structure: at river bank

Discharge Structure: at river bank

Site Information

Total Area: 1441 ha (3561 acres)

Exclusion Distance: 0.92-km (90.57-mile) radius

Low Population Zone: 3.22 km (2.00 miles)

Nearest City: New Orleans; 1980 population: 557,927

Site Topography: flat

Surrounding Area Topography: flat

Land Use within 8 km (5 miles): industrial, agricultural, recreational, and residential

Nearby Features:

The nearest town is Killona 1.6 km (1 mile) WNW. U.S. Highway I-10 is about 11 km (7 miles) NE and I-90 about 11 km (7 miles) SE. Several active and abandoned gas and oil fields are with in 16 km (10 miles). Lake Pontchartrain is about 11 km (7 miles) NE. The Missouri Pacific Railroad is just S of the site and the Southern Pacific Railroad is about 13 km (8 miles) SE.

Area of Transmission Line Corridor: 110 ha (280 acres)

Population within an 80-km (50-mile) radius:

1990	2000	2010	2030	2050
1,970,000	2,130,000	2,290,000	2,520,000	2,780,000

Watts Bar Nuclear Plant

[**Prev** | **Next** | **Top of file**]

Location:

Rhea County, Tennessee 11 km (7 miles) SSE of Spring City latitude 35.6022°N; longitude 84.7894°W

Licensee: Tennessee Valley Authority

Unit Information	Unit 1	Unit 2
Docket Number	50-390	50-391
Construction Permit	1973	1973
Operating License	--	--
Commercial Operation	--	--
License Expiration	--	--
Design Thermal Power [MW(t)]	3411	3411
Design Electrical Rating [net MW(e)]	1170	1170
Type of Reactor	PWR	PWR
Nuclear Steam Supply System Vendor	WEST	WEST

Cooling Water System

Type: natural draft cooling towers

Source: Chickamauga Lake

Source Temperature Range: 6-28°C (43-82°F)

Condenser Flow Rate: 26 m3/s (410,000 gal/min) each unit

Design Condenser Temperature Rise: 21°C (38°F)

Intake Structure: at lake bank

Discharge Structure: to lake via a holding pond

Site Information

Total Area: 716 ha (1770 acres)

Exclusion Distance: 1.21 km (0.75 mile) radius

Low Population Zone: 4.83 km (3.00 miles)

Nearest City: Chattanooga; 1980 population: 169,514

Site Topography: flat to rolling

Surrounding Area Topography: rolling to hilly

Land Use within 8 km (5 miles): wooded with some agricultural

Nearby Features:

The nearest town is Peakland 3 km (2 miles) NE. Watts Bar Dam is 1.6 km (1 mile) N. A fossil-fired steam plant is just N of the site. U. S. Highway I-75 is about 18 km (11 miles) SE. The New Orleans and Texas Pacific Railroad is 11 km (7 miles) NW. Chickamauga Lake is on the Tennessee River.

Area of Transmission Line Corridor: 1281 ha (3165 acres)

Population within an 80-km (50-mile) radius:

1990	2000	2010	2030	2050
950,000	1,040,000	1,120,000	1,240,000	1,370,000

Wolf Creek Generating Station

[**Prev** | **Next** | **Top of file**]

Location:

Coffey County, Kansas 6 km (4 miles) NE of Burlington latitude 38.2386°N; longitude 95.6894°W

Licensee: Wolf Creek Nuclear Operating Corp.

Unit Information	Unit 1
Docket Number	50-482
Construction Permit	1977
Operating License	1985

Commercial Operation	1985
License Expiration	2025
Licensed Thermal Power [MW(t)]	3411
Design Electrical Rating [net MW(e)]	1170
Type of Reactor	PWR
Nuclear Steam Supply System Vendor	WEST

Cooling Water System

Type: closed cycle cooling lake

Source: Wolf Creek

Source Temperature Range: 0-31°C (32-87°F)

Condenser Flow Rate: 30 m3/s (500,000 gal/min)

Design Condenser Temperature Rise: 17.5°C (31.5°F)

Intake Structure: structure on shore of cooling lake

Discharge Structure: discharged to 2060-ha (5090-acre) cooling lake into an embayment separated from the intake

Site Information

Total Area: 3973 ha (9818 acres)

Exclusion Distance: 1.21-km (0.75-mile) radius

Low Population Zone: 4.02-km (2.50-mile) radius

Nearest City: Topeka; 1980 population: 118,690

Site Topography: flat to rolling

Surrounding Area Topography: flat to rolling

Land Use within 8 km (5 miles): agricultural and range land

Nearby Features:

The nearest town is Sharpe about 3 km (2 miles) N. The Flint Hills National Wildlife Refuge is about 11 km (7 miles) W. The John Redmond Reservoir is about 6 km (4 miles) W. U.S. Highway I-35 is 23 km (14 miles) N. The cooling lake is formed by a dam on Wolf Creek.

Area of Transmission Line Corridor: 1200 ha (2900 acres)

Population within an 80-km (50-mile) radius:

1990	2000	2010	2030	2050
200,000	210,000	220,000	250,000	270,000

Yankee Nuclear Power Station

[**Prev** | **Next** | **Top of file**]

Location:

Franklin County, Massachusetts 34 km (21 miles) NE of Pittsfield latitude 42.7281°N; longitude 72.9289°W

Licensee: Yankee Atomic Electric Co.

Unit Information	Unit 1
Docket Number	50-029
Construction Permit	1957
Operating License	1960
Commercial Operation	1961
License Expiration	2000
Licensed Thermal Power [MW(t)]	600
Design Electrical Rating [net MW(e)]	175
Type of Reactor	PWR
Nuclear Steam Supply System Vendor	WEST

Cooling Water System

Type: once through

Source: Deerfield River

Source Temperature Range: 2-20°C (35-68°F)

Condenser Flow Rate: 8.8 m3/s (140,000 gal/min)

Design Condenser Temperature Rise: 13°C (24°F)

Intake Structure: intake from Sherman Pond about 27 m (90 ft) below normal pond level.

Discharge Structure: discharge to Sherman Pond

Site Information

Total Area: 800 ha (2000 acres)

Exclusion Distance: 0.95 km (0.59 mile)

Low Population Zone: 8.05 km (95.00 miles)

Nearest City: Pittsfield; 1980 population: 51,974

Site Topography: hilly

Surrounding Area Topography: very hilly

Land Use within 8 km (5 miles): some maple syrup production

Nearby Features:

The nearest town is Monroe Bridge 1.6 km (1 mile) WSW. Sherman Pond is adjacent to the site and discharges to the Deerfield River. A hydro station is just below the dam. Vermont Yankee Nuclear Power Station is about 32 km (20 miles) ENE. There are many ski resorts in the area.

Area of Transmission Line Corridor:

Population within an 80-km (50-mile) radius:

1990	2000	2010	2030	2050
1,720,000	1,760,000	1,800,000	1,870,000	1,950,000

Zion Nuclear Plant

[**Prev** | **Next** | **Top of file**]

Location:

Lake County, Illinois 10 km (6 miles) N of Waukegan latitude 42.4456°N; longitude 87.8022°W

Licensee: Commonwealth Edison Co.

Unit Information	Unit 1	Unit 2
Docket Number	50-295	50-304
Construction Permit	1968	1968
Operating License	1973	1973
Commercial Operation	1973	1974
License Expiration	2013	2013
Licensed Thermal Power [MW(t)]	3250	3250
Design Electrical Rating [net MW(e)]	1040	1040
Type of Reactor	PWR	PWR
Nuclear Steam Supply System Vendor	WEST	WEST

Cooling Water System

Type: once through

Source: Lake Michigan

Source Temperature Range: 0-19°C (32-66°F)

Condenser Flow Rate: 46.4 m3/s (735,000 gal/min) each unit

Design Condenser Temperature Rise: 11°C (20°F)

Intake Structure: Intake is located 790 m (2600 ft) offshore in water 6.7 m (22 ft) deep. Intake cap is 3 m (10 ft) below normal lake surface.

Discharge Structure: Each unit has a separate discharge structure 230 m (760 ft) from shoreline.

Site Information

Total Area: 100 ha (250 acres)

Exclusion Distance: 0.40-km (0.25-mile) radius

Low Population Zone: 1.61-km (1.00-mile) radius

Nearest City: Waukegan; 1980 population: 67,653

Site Topography: flat

Surrounding Area Topography: flat

Land Use within 8 km (5 miles): residential, industrial, agricultural, and recreational

Nearby Features:

Site is bounded by the Illinois Beach State Park on the south, a city park on the north, the town of Zion on the west, and Lake Michigan on the east. A railroad runs along the western site boundary. U.S. Highway I-94 is 10 km (6 miles) W.

Area of Transmission Line Corridor: 58.7 ha (145 acres)

Population within an 80-km (50-mile) radius:

1990	2000	2010	2030	2050
7,480,000	7,720,000	7,900,000	8,200,000	8,520,000

References

[**Prev** | **Next** | **Top of file**]

Nuclear Safety Journal, various issues 1957--1979.

NUREG-0020, Vol. 9, Licensed Operating Reactors, Summary Status Report: Data as of 8-31-85, U.S. Nuclear Regulatory Commission, Office of Resource Management, Division of Budget and Analysis, October 1985.

ORNL-NSIC-55, Vols. 1 and 2, F. A. Heddleson, Design Data and Safety Features of Commercial Nuclear Power Plants, Oak Ridge National Laboratory, Oak Ridge, Tennessee, November 1973.

WASH-1319, W. Ramsay and P. R. Reed, Land Use and Nuclear Power Plants: Case Studies of Siting Problems, U.S. Atomic Energy Commission, October

Appendix B: Definition of Impact Initiators for Nuclear Plant License Renewal Generic Environmental Impact Study

[**Prev** | **Next** | **Top of file**]

B.1 Introduction

[**Prev** | **Next** | **Top of file**]

Chapter 2 described the nuclear plant programs characterized for the purpose of assessing possible environmental impacts associated with license renewal. Both typical and conservative programs for both boiling- water reactors (BWRs) and pressurized- water reactors (PWRs) were described, together with the underlying assumptions and bases used in the development of these programs. Chapter 2 also presented estimates of the incremental environmental impact initiators associated with nuclear power plant license renewal.

This appendix provides additional discussion of impact initiator estimates. Additional factors and details are discussed, and comparisons are provided with license renewal-related impact initiator estimates derived from other sources. This appendix also compares the differences in impact initiators between the typical and conservative programs.

As noted in Chapter 2, license renewal for a particular plant will be based on ensuring compliance by the licensee with the current licensing basis for that plant (i.e., the original plant licensing basis as amended during the initial license

term). In addition, the licensees will be required to demonstrate for certain important systems, structures, and components (SSC) that the effects of aging will be managed in the renewal period in a manner such that the important functions of these SSCs will be maintained. The SSCs of concern in the renewal period are those which traditionally do not have as readily monitorable performance or condition characteristics and include most passive, long-lived plant SSCs. Therefore, the Nuclear Regulatory Commission's (NRC's) license renewal rule requires a systematic review of, as a minimum, passive, long-lived SSCs that support safety or other critical functions of a nuclear power facility. To make these determinations regarding these SSCs, it is expected that licensees will implement aging management activities for SSCs for which current programs are not adequate to ensure continued functionality in the renewal term. These aging management activities are expected to include surveillance, on-line monitoring, inspections, testing, trending, and recordkeeping (SMITTR) as appropriate. This enhanced activity, together with updated aging assessments, is intended to ensure that aging-related degradation of important SSCs is detected and mitigated in a timely manner. The satisfactory fulfillment of NRC requirements for license renewal may necessitate repairs or modifications to the facility or its operations which are incremental to corresponding actions being performed during the term of the current license. Note that the license renewal rule does not require any specific modifications to a facility.

In addition to those actions required by 10 CFR Part 54 or other licensing requirements, licensees may undertake various refurbishment and upgrade activities at nuclear plants to better ensure economic and reliable power generation from these facilities. These activities performed for safety and/or economic reasons can result in environmental initiators which are different from those incurred in the original licensing term.

B.1.1 Purpose

The primary objective of the effort discussed here was the development of quantitative estimates of selected license renewal-related environmental impact initiators. The term "impact initiators" was defined in Chapter 2. The resulting impact initiator estimates were used in developing the Generic Environmental Impact Statement (GEIS) to support nuclear plant license renewal rulemaking. All initiators characterized in this appendix are incremental relative to those already experienced with current nuclear plant operation. The incremental environmental impact initiators expected to result from license renewal-related activities are as follows:

- labor hours and work force size;
- labor costs;
- occupational radiation exposure;
- capital costs; and
- radioactive waste types, volumes, and disposal costs.

As noted in Chapter 2, the impact initiators cited above are those which result from nuclear plant incremental aging management activities. These are the incremental activities performed to support license renewal and extended plant operation. Also, the focus is on changes in impact initiators originating from plant activities as opposed to changes in the plant environs or receptors (e.g., changes in the population affected by the plant). The impact initiators assessed herein form a sufficient set from which to assess most license renewal-related environmental impacts.

Two types of license renewal program estimates are developed herein. The first applies to "typical" license renewal programs and is intended to be representative of the type of programs that most plants seeking license renewal might implement. The second is more encompassing and is intended to be an upper bound as to the impacts likely to be generated at any particular plant.

Both types of estimates are useful. The typical scenarios are useful for estimating impacts from an "average" license renewal program and for estimating total nuclear plant population impacts on the nation as a whole. The typical programs are intended to be representative of plants that have been reasonably well maintained and that have already undertaken most major refurbishment activities that might have been necessary. The conservative scenario estimates,

on the other hand, are useful for estimating the maximum impacts likely to result from any individual plant's license renewal program.

B.1.2 Scope and Organization

This appendix presents estimates of potential environmental impact initiators that may result from nuclear plant license renewal. These quantitative estimates apply to an assumed approach to aging management for two specific reactor plant types, BWRs and PWRs. Postulated sets of license renewal activities, with separate implementation schedules, have been defined for each reactor type and for both the typical and conservative scenarios. This appendix also presents the bases and assumptions used in developing the information.

More specifically, the results include the following:

- definition of reasonable license renewal programs, which include specific activities for specific SSCs, developed separately for a generic BWR and a generic PWR;
- estimates of the labor hours, work force size, labor cost, capital cost, occupational radiation exposure, and radioactive waste associated with each activity;
- summary estimates of impact initiators associated with the conduct of an entire license renewal program; and
- definition of the rates at which impacts are accrued for each program.

This appendix presents and describes all of these results. In addition, estimates are provided of the impact initiators attributable to satisfying the proposed revision to the license renewal rule [FR 59, no. 174, 46574 (September 9, 1994)]. Possible off-site labor costs are also quantified, as are replacement energy costs for the incremental downtime needed to perform aging management activities.

To encompass the full range of individual plant license renewal actions, additional candidate programs could have been defined and characterized. These could have been developed based on other approaches to plant aging management. For example, the programs used in this analysis are characterized by extensive refurbishment and replacement of SSCs as a means of managing aging. An alternative program might be one with reliance on more extensive SMITTR activities and less reliance on refurbishment. The approach followed in this evaluation is more conservative because it results in higher estimates of impact quantities. Alternative approaches to license renewal will likely be proposed by some nuclear utilities. However, the staff believes the programs characterized here are reasonably comprehensive and provide reasonable estimates of both typical program impacts characteristic of the reactor population as a whole, and upper bound impacts associated with what might be required by a few outlier plants seeking license renewal.

Section B.2 discusses the technical approach and bases used in the development of environmental impact initiator estimates. The specific SMITTR and major refurbishment activities included in the typical and conservative license renewal programs are reviewed in Section B.3, as are additional details of the data and information development. The results of the analysis are presented in Section B.4. That section also compares the results and estimates of license renewal-related costs developed here with similar information developed by industry.

B.2 Technical Approach and Bases

[**Prev** | **Next** | **Top of file**]

The overall plan for support of the GEIS was to develop, by plant category, expert estimates for the various environmental impact initiators associated with nuclear plant license renewal. Plant categories were defined based on the characteristics deemed important in determining environmental impacts. The environmental impact initiators for the two basic plant categories of interest were estimated by first defining a representative set of activities to be pursued to achieve license renewal and extended plant operation. Impact initiators (labor, radiation exposure, radioactive wastes, etc.) were then identified and quantified for each activity. These activity impacts were summed to provide an estimate of overall environmental impacts associated with each plant type and each program type.

B.2.1 Technical Approach

The work undertaken to define and characterize impact initiators in support of the GEIS development was divided into three primary technical areas. These are briefly discussed below.

B.2.1.1 Definition of Information Requirements

This effort addressed two key aspects to ensure complete support for the GEIS: (1) development of candidate lists of activities with potential environmental consequences and (2) identification of environmental attributes (impact initiators) associated with those activities.

A comprehensive list of possible license renewal-related activities with potential environmental impacts was developed. Emphasis was placed on defining those activities clearly associated with license renewal (i.e., those activities which would not be included in a continuation or extrapolation of the activities that occurred during the original licensing term). The types of activities considered range from enhanced inspection programs to component replacement, and they include the list of activities originally developed for the License Renewal Rule Regulatory Analysis (NUREG-1362). The list of activities developed for that regulatory analysis was modified to reflect the proposed changes to the license renewal rule (10 CFR Part 54). In turn, the potential environmental impact initiators of each identified activity were examined and analyzed. Typical attributes included labor force requirements, low-level waste generation, capital costs, and worker radiation exposure.

B.2.1.2 Design of Database Extension and Application

Work performed in support of the 10 CFR Part 54 License Renewal Regulatory Analysis had initiated the development of a database of aging management and aging mitigation activities. To maintain control over the quality of the data and the effort required, the data were managed with a state-of-the-art relational database program on a microcomputer. This database application incorporated models of SMITTR effectiveness, permitting assessment of proposed aging management programs. The relational database facilitated the organization, archiving, and retrieval of the generic SMITTR data. The microcomputer database design was expanded to cover the more comprehensive information requirements related to assessing license renewal environmental impacts.

B.2.1.3 Review and Development of Data

Estimates of the potential incremental environmental attributes or challenges (i.e., impact initiators) created by license renewal- related activities were prepared for a generic BWR and a generic PWR. The plant features utilized were based on representative 1000-MW(e) plant designs. The plant designs were briefly discussed in Chapter 2. All attributes were quantified using actual data, industry estimates, or NRC's generic estimating methods. In addition, schedules were developed for implementing each activity of each program. Many activities carried out in support of license renewal and extended plant life are repeated at given intervals. For these types of activities, the repetition frequency and implementation schedule were also established.

The Part 54 Regulatory Analysis was reviewed for applicability and updated with more recent or more accurate information if available. New data requirements were evaluated and information sources identified. All information was reviewed in detail to ascertain its accuracy and entered into a database system. The database was then sorted into the requisite plant categories and the information provided for performance of the environmental impact assessment.

B.2.1.4 Accounting for the Effects of Other NRC Regulations

All activities were reviewed for possible overlap with actions that may be undertaken to satisfy other licensee requirements, such as those imposed by the Maintenance Rule. For the typical license renewal programs, any activity potentially required by regulations other than the license renewal rule was deleted from the programs. In certain cases, activities which met this criterion were retained to encompass what licensees might do to better ensure reliable and economical plant performance, and thus to account for enhanced or additional actions performed on non-safety-related

SSCs. Whenever such activities were retained, the numbers of SSCs to which these activities applied were reduced to reflect that fraction of the time that the actions would be performed in response to Maintenance Rule or other rule requirements.

Note that this type of review was performed for the typical scenarios only. For the conservative scenarios, this type of refinement to the programs would have had a negligible effect on the overall estimates of impact initiator quantities.

B.2.2 Assumptions and Bases

B.2.2.1 Bases for Reference License Renewal Programs

Most of the assumptions and bases used in developing the license renewal program environmental impact initiator estimates were discussed in Chapter 2. Additional aspects are presented here.

The typical and conservative license renewal programs characterize actions a licensee may take to ensure both safe and economic operation of its plant beyond the current 40-year license period. In reality, each plant's program and the specific refurbishment or repairs made for extended life will depend on many factors, including the original plant design, repairs already undertaken in the original license period, operating conditions and unusual occurrences, and plant management philosophy. The set of actions actually undertaken for license renewal, therefore, are expected to vary by plant because of specific plant designs, vintages, and classes. The staff believes the range of estimates developed here reasonably bound the impacts likely to actually accrue at any individual plant site.

The typical programs are intended to be representative of the typical or "average" plant's activities in support of license renewal. However, as noted in Chapter 2, the typical programs are still somewhat conservative.

The conservative license renewal scenarios are intended to capture what might occur for those outlier plants whose impacts will be considerably greater than what is typical of the reactor population as a whole. Because these conservative programs are quite comprehensive, they encompass impacts from more typical programs. The primary bases and assumptions used were discussed in Chapter 2.

The typical programs for both BWRs and PWRs are similar, except for the differences caused by reactor design and technology. This is also the case for the conservative programs.

B.2.2.2 Aging Management Programs: Descriptions, Assumptions, and Bases

Key aspects of the license renewal environmental impact assessments were discussed in Chapter 2. Additional factors and considerations are presented in the following discussions.

B.2.2.2.1 Sources of Information

Activities assumed to occur under each plant operational or outage mode were based on information available in industry lead and pilot plant life extension studies (EPRI NP-5181SP and NP-5181M; EPRI NP-5289P; EPRI NP-5002), NRC's Nuclear Plant Aging Research program results (NUREG/CR-5284; NUREG/CR-4731), previous and ongoing NRC license renewal regulatory analysis efforts (Sciacca 1989; MITRE 1988; Sciacca January 25, 1990; Sciacca February 20, 1990), discussions of major repair activities undertaken at operating nuclear power plants as reported in technical literature (Forest 1988; Katz 1988; Miselis 1988), and discussions with industry and nuclear equipment suppliers. Discussions were also held with lead plant personnel to further ascertain the results of their life extension and license renewal evaluations (Sciacca January 3, 1993; Attachment 1). Estimates of labor and routine occupational exposure incurred in the performance of these activities were largely based on information provided in those sources. Where such estimates were not available, they were derived using the generic estimating methods developed by the NRC (NUREG/CR-4627; NUREG/CR-5236; NUREG/CR-5035; NUREG/CR-4555). The assessment of available information included an extensive literature search of actual industry data of relevant SMITTR and refurbishment/replacement activities. The information found, and the sources investigated, are discussed in Attachment

1 to this appendix. The Maintenance Rule (10 CFR 50.65) was also reviewed to assess the effects of this requirement relative to detecting and mitigating aging degradation of important SSCs.

B.2.2.2.2 Major Refurbishment Schedules

Impact initiators were initially developed for two different schedules for major refurbishment or replacement activities (Sciacca 1990). The reference schedule assumes that major refurbishment activities associated with license renewal are started shortly after the new license is granted and that these are accomplished over several successive outages. They are completed by the time the plant completes its 40th year of operation, which is about 10 years into the new license term. A second schedule was explored which was based on the assumption that all major activities of this type occur at the end of the current 40-year license period, either by preference or because the license renewal is not expected in time to schedule activities earlier during the current period. This major refurbishment outage would necessitate a longer duration than that called for by the reference schedule. Because of the complexity of accomplishing all of the major refurbishment activities called for in the example aging management programs at a single outage, this latter scenario was dropped from consideration.

The schedule for performing any major refurbishment activities will undoubtedly be highly plant-specific, and such activities could well be spread throughout the term of the renewed license. Earlier timing of these activities provides the utilities with more time to recover the cost of the investment through the sale of energy produced. Thus, the schedules utilized for the present evaluations are reasonable, but alternative schedules are also possible.

The schedules utilized were similar for both the BWR and PWR programs. However, typical programs have little need for an extended outage because the extent of major refurbishment activities is relatively modest. The "major refurbishment outage" duration for typical programs was reduced compared with that deemed necessary for the conservative case scenarios.

B.2.2.2.3 Outage Types and Durations

Chapter 2 noted that activities carried out in support of license renewal and extended plant life were assumed to be performed primarily during selected outages. Five types of outages were used; they are referred to as normal refueling, 5-year in-service inspection (ISI) refueling, 10-year ISI refueling, current term refurbishment outages, and major refurbishment outages.

Outage types and durations were established to allow estimation of the rates at which environmental impacts might be generated as a result of license renewal activities. Of greatest concern from this standpoint are the projections of the number of temporary workers needed to accomplish license renewal activities. The number of workers required at a site for a given outage depends on the amount of work to be performed (labor hours), the time available to accomplish the work, and the number of labor hours expended per person-week or person-day. The number of workers so identified, in turn, allows estimation of potential socioeconomic and other impacts to affected communities.

Certain aging management activities were assumed to be performed during full power operation. These activities will add to the plant full-time staff requirements.

In the reference BWR and PWR programs, the initial period of the renewed license was characterized by the major refurbishment outage as well as by several shorter outages referred to as current-term outages. The duration of the major refurbishment outage for the conservative case scenarios was set at 9 months for both reactor types. This duration was established based on the most limiting activity taking place during that period. For the PWRs, the most limiting activity was steam generator replacement. The limiting activity for the BWRs was the replacement of reactor recirculation piping. Recent experience indicates that both of these major activities can be accomplished in 9 months or less.

For the conservative scenarios, the 10- year ISI was given a duration of 4 months, with other 5-year ISIs lasting 3 months. Most other refuelings were assumed to be 2-month outages. Current-term outages were assumed to have a duration of 4 months each.

For the typical scenarios, the duration of the major refurbishment outage was set at 4 months. This duration was adequate to accomplish the limited number of major refurbishment activities included in these programs. For these scenarios the 10-year and 5-year ISIs, as well as current-term outages, were given a duration of 3 months each.

Assignments of outage duration were based on experience prevalent in the nuclear industry.

In reality, all outage durations will be established based on both economic considerations (e.g., cost of replacement power) and what can practically be accomplished during each outage. The short outages in which many major activities (including refueling, ISIs, major component replacement, etc.) are assumed to be undertaken simultaneously may require very large (possibly unreasonably so) labor forces. No attempt was made in this limited effort to optimize outage schedules or durations. However, preliminary work schedules were developed for the conservative scenario major refurbishment outages for both BWRs and PWRs to assess whether the major activities slated for this period could reasonably be accomplished in the allotted time. This assessment indicated it is feasible to accomplish the example refurbishment during the 9-month duration assumed.

B.2.2.2.4 Labor Categories

Labor necessary to accomplish the inspection, surveillance, testing, maintenance (ISTM), and major refurbishment/ replacement activities associated with license renewal and plant life extension (PLEX) were estimated separately for each activity. Labor was subdivided into the categories of engineering, administrative, skilled crafts, and laborers. Each labor category's hours in different radiation fields were estimated by activity. In addition, health physics-related support service labor was separately estimated for all activities performed in a radioactive environment.

B.2.2.2.5 Activity Repetitions

The number of times a given activity was performed was determined based on the intervals between the times when a given activity (such as a particular inspection or refurbishment) would be performed on a given component and the number of such components in the plant subject to those actions. Quantities of similar components were determined from reviews of representative plant piping and instrumentation diagrams, key system schematics, plant descriptions, and detailed material take-offs available for various plants. Frequencies for activities such as major refurbishment or replacements might occur only once in the plant's lifetime (e.g., BWR recirculation pipe replacement), or they might occur several times (e.g., valve refurbishment or replacement). Only incremental aging management activities, those which are in addition to those currently performed, were included here. Lead plant program information was also used in establishing activity repetitions and frequencies.

B.2.2.2.6 Radioactive Waste Generation

Volumes and types of waste generated were estimated on an activity-by-activity basis. For refurbishment, overhaul, or replacement activities, estimates of noncompactible wastes were based on the size of the items involved (i.e., the physical dimensions of the target items). Associated compactible wastes were estimated based on typical ratios of compactible-to- noncompactible volumes. In addition, compactible and noncompactible waste volumes were derived from information found in published reports of major repairs undertaken at nuclear power plants. Fluid volumes generated as a result of decontamination activities were estimated based on typical volumes generated for similar activities. All fluids used in these processes were assumed to be processed through filters or resin beds to remove contamination so that no radioactive liquids needed to be disposed of. The resulting resins or filters are disposed of as dry wastes.

All inspection, surveillance, and test activities conducted on radioactive systems or in radiation areas were also assumed to generate radioactive wastes. For such activities, compactible dry active wastes (DAW) were assumed to be

generated at the rate of 0.012 m3 (0.4 ft3) per craft labor hour (as-generated volume). These result from the laundering and disposal of anti- contamination clothing and other protective equipment.

B.2.2.2.7 Waste Disposal Costs

Costs associated with the disposal of low-level radioactive wastes generated from license renewal-related activities were estimated separately for BWRs and PWRs. These estimates took into account the projected volumes of noncompactible and compactible DAW generated by each reactor type in the conduct of license renewal- related activities. The disposal costs were calculated using the NRC's generic estimating methodology (NUREG/CR- 4555), but the bases were updated to reflect the rapid escalation in burial costs arising from the formation of regional compacts and the likely closure or limited availability of the existing low-level waste disposal sites. The basis for estimating waste disposal costs is discussed more fully in Section B.3.2.4.

B.2.2.3 Approach to Estimating Impact Initiators

The estimation of impact initiators first required that the generic license renewal programs be defined in terms of the specific activities and activity repetitions making up each program. Next, the median value of each impact for each individual SMITTR or refurbishment activity was estimated for that activity taken over the full range of plants and potential circumstances. For major refurbishment activities, however, surveys were performed of pertinent, recent industry experience. Experience has shown that strong learning curve effects exist (i.e., subsequent work benefits from the experience of prior similar activities), even when the activities of interest are performed by different nuclear plant licensees. These learning curve effects suggest that, especially for major repair/refurbishment activities, it is appropriate to use information reflecting recent experience rather than median or average experience. Impact estimates for activities of this type were based on recent experience. Once values were established for each activity included in a license renewal program, the values were summed for all activities making up the program.

The particular aging management approach assumed for assessing environmental impact initiators relies more heavily on refurbishment, replacement, and monitoring than on extensive inspection, surveillance, and testing. The approach taken for these example programs tends to concentrate the impact initiators during initial refurbishment periods. For the conservative case outages, they represent an envelope that captures the activities that might be performed at essentially any U.S. nuclear power plant in support of license renewal and extended plant life. They are intended to present fairly robust scenarios in terms of environmental impacts incurred during the refurbishment outages.

B.3 Data Development

[**Prev** | **Next** | **Top of file**]

The primary objective of this effort was to provide quantitative estimates for license renewal-related initiators which could produce incremental environmental hazards or impacts because of extended operation of nuclear power plants beyond the original 40-year term. That objective was accomplished using the following basic approach. First, candidate lists of plant SSCs susceptible to aging degradation were identified. Next, prototypic license renewal and aging management programs were defined in terms of the activities which could be carried out to manage the aging of these SSCs. These were the incremental activities carried out to support license renewal and extended plant life but not required or impacted by other NRC requirements. Each activity performed on each SSC was evaluated to estimate the potential impact initiators resulting from the conduct of that activity. Finally, total program impacts were estimated by summing the impacts from the individual activities making up a license renewal program. As noted previously, these programs of activities were defined and evaluated separately for BWRs and PWRs, each with both a typical and a conservative scenario. This section discusses the methods and bases used to establish the quantitative estimates of impact initiators.

As indicated in Section B.2.2.2.1, many different sources of information were drawn upon to establish the characteristics and content of the prototypic license renewal aging management programs and to estimate the impacts

associated with each. These sources helped, in particular, to characterize the types of aging management programs that might be needed to support extended plant life during the license renewal term. The activities carried out under these programs will be needed to maintain the current licensing basis of the plants and to provide for their economical operation, as well as to satisfy the aging management requirements stipulated in the license renewal rule.

In the discussions which follow, Section B.3.1 describes the key aging management programs used to assess potential environmental impacts, and Section B.3.2 presents the specific impact initiators and describes the quantification of each initiator.

B.3.1 Aging Management Activities

The SSCs of interest for the example license renewal programs were presented in Chapter 2. The following discussions elaborate on representative aging management activities likely to be carried out on these SSCs.

The incremental aging management activities carried out to allow operation of a nuclear power plant beyond the original 40- year license term will be from one of two broad categories. These two categories of activities are (1) SMITTR actions, most of which are repeated at regular intervals, and (2) major refurbishment or replacement actions that usually occur fairly infrequently, or possibly only once, in the life of the plant for any given item.

B.3.1.1 SMITTR Aging Management Activities

Most of the SMITTR activities included in the present assessment were taken from the Safety-Centered Aging Management program defined previously and utilized for the 10 CFR Part 54 License Renewal Regulatory Analysis (NUREG-1362). However, the current effort includes additional items and activities, because the previous analysis focused only on SSCs important to safety, whereas licensees will also perform actions aimed at ensuring reliable and efficient electrical power production. Thus, many balance-of-plant SSCs are included here which were not included in the 10 CFR Part 54 evaluations.

In certain cases an SMITTR activity could involve replacement or refurbishment of the SSC being addressed. Any such SMITTR replacement/refurbishment activities for a particular item typically occurred more than once in the extended life of the plant.

Table B.1 lists the incremental SMITTR actions used as the basis for estimating license renewal environmental impacts. It indicates the specific aging detection and mitigation actions performed on each SSC of concern. The table also indicates the actions included in the typical scenarios, as well as those in the conservative case scenarios.

Table B.1 indicates the specific SMITTR activities included in each type of program, but it does not indicate the number of SSCs subject to a particular activity. The programs defined for the conservative case scenarios in all instances match or exceed the number of SSCs included in the corresponding typical license renewal programs.

B.3.1.2 Major Refurbishment Aging Management Activities

The list of major replacement and refurbishment activities included here was derived largely from areas of concern identified in the industry pilot and lead plant life extension studies, for both the conservative and typical scenarios. Those studies did not necessarily indicate that all of the items addressed should be replaced or undergo major overhauls. However, for all items addressed there was sufficient concern over their long-term integrity that investigators thought that, as a minimum, additional analysis was warranted.

Although replacement may not have been indicated for the pilot and lead plants, at least a few plants may well face extensive actions of this type to ensure safe and economical operation throughout the renewal term. Therefore, regardless of the specific determinations for the pilot and lead plants, the SSCs of concern identified in those studies form a representative list of candidate items for inclusion in major replacement and refurbishment actions for outlier plants, and thus for the conservative scenarios. Other items included in this list were drawn from actions that have already occurred at one or several operating power plants. BWR recirculation piping replacement and PWR steam

generator replacement fall into this category. Although many plants will undertake the replacement of such items during the current license term, there may well be other plants which would undertake such tasks only to allow for extended plant operation. Inclusion of these activities in the conservative case scenario evaluations provides for a conservative estimate of what at least a few plants may require.

Table B.1 Incremental SMITTRa enhancement activities

SMITTR action	Conservative/typical program
BWRb SMITTR Enhancements	
Bellows	
Inspect one refueling and dry well bellows assembly	Both
Control Rod Drive Mechanism	
Discharge and vent value tests of one mechanism	Both
Recirculation Pump and Motor	
Conduct detailed inspection (disassembly/reassembly) of one pump and motor	Both
Metal Containment Including Suppression Chamber	
Inspect suppression pool and vent system exterior	Both
Renew protective coating on containment structure	C
RPVc Internals	
Conduct underwater inspection of core plate for IGSCC,d jet pump brace and safe ends, shroud-to-shroud flange and access hold cover, bolt inspection method, and ultrasonic testing of top guide.	Both
Conduct ultrasonic testing of top guide in central core region for IGSCC, shroud-shroud support cylinder welds, core spray inlet tee attachment, jet pump riser elbow to thermal sleeve weld region, and jet pump diffuser-to-adapter weld joint	Both
PWRe SMITTR Enhancements	
Critical Concrete Structure--Containment	
Renew all concrete protective coating on containment structure	Both
Reactor Coolant pump	
Conduct detailed inspection (disassembly, reassembly) of PWR coolant pump, shaft, and motor	Both
RPV Internals	
Inspect core support plate, core shroud, top guide using visual and ultrasonic testing or similar methods, and welds and critical areas	Both
Enhancements to Components of Both PWRs and BWRs	
AC or DC Bus	
Inspect one medium-voltage breaker per manufacturer's recommendations	Both
Actuation and Instrumentation Channel	
Inspect connectors and penetrations for one channel	Both
Building Crane	
Perform load lift program on one crane, comprehensive SMITTR of crane or hoist	Both
Check Valve	
Re-grind one valve seat; replace moving parts mechanisms	Both
Compressed Air System	
Perform frequent inspection of compressed air system elements, including filter _P and leakage checks	Both

Containment	
Examine fabrication welds (ultrasonic testing and visual) and base and concrete core sample (remove and replace a 6-in. square of concrete)	Both
Emergency Diesel Generator	
Inspect main bearings for wear and connecting rods for fatigue damage; also check for gear fatigue and wear	Both
Conduct turbocharger drive gearing surveillance for one emergency diesel generator	Both
Fan Cooler	
Inspect one fan motor for break down during run (megger); perform visual check of fan running, vibration	Both
Fuel Pool	
Conduct visual inspection of liner	Both
Heat Exchanger	
Conduct comprehensive efficiency test on one heat exchanger	Both
Heating, Ventilation, and Air Conditioning (HVAC)	
Inspect ducting, fans and motors, flex-joints, and dampers for degradation	Both
Conduct SMITTR of HVAC of one building	Both
Hydraulic or Air-Operated Valve	
Refurbish operator on one valve; regrind valve seat	Both
Main Condenser	
Inspect wall thickness of condenser	Both
Main Generator	
Inspect rotor of one main generator	Both
Main Turbine	
Conduct ultrasonic test of casing for one turbine	C
Motor Operated Valve	
Refurbish one valve, replacing internals	Both
Motor-Driven Pump and Motor	
Conduct detailed disassembly-inspection-reassembly for one pump and motor internals	Both
Nuclear Steam Supply System Supports	
Torque statistical sample of component support anchor bolts	Both
RPV	
Visually assess condition of entire vessel exterior; inspect/evaluate one specimen for fracture toughness and tensile strength	Both
Inspect condition of dry lubricants in sliding foot area	Both
Turbine-Driven Pump and Turbine	
Conduct detailed disassembly-inspection- reassembly of one pump and turbine internals	Both

[a] SMITTR = Surveillance, On-Line Monitoring, Inspections, Testing, Trending, and Recordkeeping

[b] BWR = boiling-water reactor

[c] RPV = reactor pressure vessel

[d] IGSCC = intergranular stress-cracking corrosion

[e] PWR = pressurized-water reactor

Table B.2 Major refurbishment/replacement activities

Refurbishment/replacement action	Conservative/typical program
Activities Common to Both BWRsa and PWRsb	
• General refurbishment and repair of turbine building, primary auxiliary building, waste processing building, fuel storage building, and feedwater pipe enclosures	C
• Major overhaul and upgrade for buildings	C
• Major repair/refurbishment of main generator	Both
• Overhaul one crane	C
• Refurbish 25 percent of liquid rad waste system	C
• Refurbish coating of one condensate storage tanks	C
• Refurbish main station switchgear	C
• Refurbish main steam valves	C
• Renew protective coating on containment structure	Both
• Repair/refurbish 5 percent of reactor containment building interior concrete (or equivalent repairs)	C
• Repair/refurbish turbine pedestal	C
• Repair/replace major concrete imbedments in reactor containment building	C
• Repair/replace portions of nuclear steam supply system major piping and component supports	C
• Repair ultimate heat sink structure	C
• Repair/replace 20 percent of main steam, feedwater, condensate, and circulating water system piping	C
• Replace approximately half of the feedwater heaters	C
• Replace closure stud bolts	Both
• Replace containment electrical penetrations	Both
• Replace containment sensors and instrumentation	C
• Replace diesel generators	C
• Replace turbine rotor	Both
• Replace portions of electrical cabling both inside and outside of containment	C
• Replace/repair electrical raceways and supports	C
Activities Unique to BWRs	
• Replace all shroud head bolts in reactor vessel	C
• Replace recirculation pump shaft and impeller, refurbish casing--of each pump	C
• Replace entire BWR recirculation piping system and safe-ends	C
• Replace one-half of the jet pump assemblies in the reactor vessel	C
• Replace upper and lower core structure	Both
Activities Unique to PWRs	
• Anneal the reactor vessel	C
• Replace approximately half of reactor pressure vessel lower internal structures	Both
• Replace steam generators	C
• Replace pressurizer	C
• Replace reactor coolant pump internals and refurbish pump	C

[a] BWR = boiling-water reactor

[b] PWR = pressurized-water reactor

Table B.2 lists the major refurbishment or replacement activities used to estimate environmental impacts. Both typical and conservative case activities are indicated. The table indicates the fractions or portions of the SSCs involved which are subject to the stated actions. Unless otherwise noted, 100 percent of an SSC was assumed to be replaced or refurbished. As with the list of actions cited in Table B.1, the quantities assumed were based in part on the information provided in the industry pilot and lead plant studies (EPRI NP-5181SP; EPRI NP-5181M) and from reported existing industry experience on major refurbishment (Forest 1988; Katz 1988; Miselis 1988; North Anna-1 1993; Rippon 1990). In other cases, engineering judgment provided the basis for the portions of the systems or structures being replaced or refurbished. The actual industry experience to date with similar activities indicates that theactions listed and quantities represented in Table B.2 for the conservative case scenarios are quite conservative in that no individual plant has had to undertake the comprehensive set of actions shown. An even more conservative approach could have been taken whereby the list of activities could have been expanded and/or the portions of the SSCs involved could have been increased (e.g., replace 100 percent of feedwater heaters rather than 50 percent). However, such an approach was judged to be highly unrealistic and would have resulted in unrealistically high estimates of license renewal environmental impacts.

Table B.2 indicates that relatively few major refurbishment activities have been included in the typical license renewal programs. The activities of this type that were retained were based in part on a review of the lead plant license renewal program plans. The typical programs are based on the assumption that most plants will be maintained and operated in a manner that reduces the need for all but a few major refurbishment activities that must be undertaken sometime during the term of the renewed license. In reality, many plants will have undertaken various major refurbishment activities during the term of the current license.

B.3.1.3 Outage and Operational Modes

The bulk of the incremental activities making up the example license renewal programs must be performed when the plants are shut down. As indicated in Section B.2.2.2.3, five different types of outages were used for defining the schedule for conducting these activities. These modes are referred to as current-term outages, refurbishment outages, 5-year ISI outages, 10-year ISI outages, and normal refueling outages. In addition, certain incremental inspection and surveillance activities were assumed to be conducted during power operation. This is referred to as the full power mode. The five outage modes are characterized in the following sections.

Figure 2.3 in Chapter 2 indicated the points in a representative license renewal schedule at which these various outage modes were assumed to occur.

B.3.1.3.1 Current Term Outages

Many of the major refurbishment and replacement activities undertaken to support license renewal can be performed in stages and need not be accomplished in a single outage. This would apply, for example, to activities such as electrical cable replacement and structural upgrades. For the example programs used herein, such activities are assumed to commence shortly after the renewed license is granted by the NRC. The current analysis assumes that four current-term outages occurring within the first 10 years under the new license will be used to accomplish the bulk of the major upgrades that can be spread out in time. These outages had an assumed duration of 4 months each for the conservative case scenarios and 3 months each for the typical scenarios.

B.3.1.3.2 5-Year In-service Inspections

Two 5-year ISIs will be performed during the renewal term, corresponding to years 5 and 15 of the extended period. Certain incremental activities are assumed to be performed in addition to the 5-year ISI actions currently required of nuclear plant licensees. The incremental SMITTR activities performed during the normal refueling outages of the extended term are also carried out for the 5-year ISI outages. These outages have durations of 3 months each for all programs.

B.3.1.3.3 10-Year In-service Inspection

A single 10-year ISI is assumed to be performed midway through the extended license period. The activities assumed to occur at this outage are incremental to current 10-year ISI requirements, and also include all actions undertaken during normal outages of the extended term of plant operation. A 4-month outage duration is assumed for the conservative case scenarios, and 3 months each for the typical scenarios.

B.3.1.3.4 Refueling Outages

In addition to the 5- and 10-year ISI outages, the 20-year renewal term is assumed to be characterized by eight normal refueling outages with a duration of 2 months each for each license renewal program. Incremental SMITTR activities are performed at each of these outages.

B.3.1.3.5 Refurbishment Outage

Certain major plant upgrades, replacements, and refurbishment must realistically be accomplished during a single outage period. Replacement of steam generators in a PWR and recirculation piping in a BWR fall into this category. To accommodate major activities such as these, a single extended outage is assumed to occur at the end of the 40-year current term of operation for the conservative scenarios. For both BWRs and PWRs this conservative case outage was assumed to have a duration of 9 months. The refurbishment activities in the typical license renewal scenarios are modest compared to those in the conservative case scenarios and can be accomplished in less time. A 4-month duration was judged to be adequate for this outage for the typical scenario. Other major activities that were initiated during the current-term outages are assumed to be completed at this refurbishment outage.

A preliminary check was performed as to the reasonableness of the 9-month duration for the major refurbishment outages of both the BWR and the PWR conservative case license renewal programs. This check entailed identifying the critical path activities slated for accomplishment at this outage, assessing the time required to perform each activity, and developing an overall schedule. Figures B.1 and B.2 display the results of this evaluation. Figure B.1 shows a possible schedule for the PWR for completing the critical path activities. The comparable information for the BWR is displayed in Figure B.2. Recent industry experience, where available, was used to estimate the duration requirements for each critical path activity. These assessments also focused primarily on in-containment activities, and the assumption was made that outside- containment work was less limiting and allowed greater scheduling flexibility than the in-containment work. Both schedules allow for complete defueling of the reactor before initiating major refurbishment activities in the containment buildings. These assessments, although preliminary, suggest that the assumed 9-month duration for the conservative case major refurbishment outages is feasible.

Note that recent industry experience with major refurbishment activities such as steam generator replacement indicates that these large efforts can be accomplished in periods ranging from about 3 to 5 months, rather than the 9 months assumed for the current conservative program evaluations (North Anna-1 1993; Rippon 1990). The 9-month major refurbishment outage duration was retained to more realistically accommodate the large number of refurbishment activities assumed to proceed simultaneously during this outage.

For the typical license renewal scenarios, the most limiting activities undertaken during the major refurbishment outage were replacement of certain reactor vessel internal components and repairs to the main turbine-generator. A 4-month outage duration was judged to be sufficient to accomplish these activities.

Figure B.1 PWR major refurbishment outage schedule.

Figure B.2 BWR major refurbishment schedule.

Table B.3 Outage duration summary

Outage type	Outage duration (months)

	Conservative	Typical
Refueling	2	2
5-year in-service inspection	3	3
10-year in-service inspection	4	3
Current-term outage (refurbishment)	4	3
Major refurbishment outage	9	4

Table B.3 summarizes the different outage types and durations for both reactor types and for both the typical and conservative license renewal scenarios.

In addition to the aging assessment and management activities performed during plant shutdown, certain incremental SMITTR activities can also be performed during full power operation. The current assessment identified only a limited number of activities of this type. This activity mode is referred to as the full power mode.

B.3.2 Quantification of Impact Initiators

Three primary types of impact initiators related to license renewal activities were quantified in this assessment: on-site labor, occupational radiation exposure, and radioactive waste generation. Other possible contributors to socioeconomic and/or environmental impacts were also assessed: capital costs, radioactive waste disposal costs, additional off-site labor requirements, and plant down time and replacement energy costs. The following sections discuss the basis for the impact quantification associated with conducting the license renewal-related activities.

B.3.2.1 Labor

This assessment developed three aspects of labor required to carry out aging management activities in support of license renewal. These aspects include labor hours, labor costs, and the number of individuals needed during a given period to perform the activities. In addition, the five labor categories of administrative personnel, engineering, craft workers, unskilled laborers, and health physics support staffing were treated.

This labor quantification effort first defined the number of craft and/or unskilled labor hours needed to perform each specific activity encompassed by any of the aging management programs. The labor estimates associated with the conduct of the SMITTR activities were taken largely from the license renewal regulatory analysis developed previously (Sciacca January 25, 1990; Sciacca February 20, 1990). The labor estimates for each activity were reviewed. Changes to the original estimates were made if new information indicated the need for revision. In many cases, the number of times a given activity was carried out was increased relative to the estimates used in the regulatory analysis. This approach was taken because the current effort encompasses actions undertaken to address both plant safety and economics, whereas the regulatory analysis dealt strictly with safety-related activities. This is particularly true for the conservative scenarios. Also, the broader scope of the current effort required the inclusion of many balance-of-plant SSCs that need to be addressed to provide economical and reliable electrical power generation over the extended term of operation.

The labor estimates required to accomplish major refurbishment or replacements were derived in two ways. If the activity of concern had already been performed in U.S. nuclear plants, and if the actual labor expenditures were reported in available documentation, this actual experience was used as a basis. Adjustments were made in certain cases to reflect learning curve effects where future repetitions of that activity could benefit from the earlier examples. However, many major refurbishment/replacement activities postulated in the current assessment have not been performed previously, or if they have, the labor required to accomplish these actions is not available. For activities in this category, NRC's generic cost estimation methods were used (NUREG/CR-4627; NUREG/CR-5236). This method uses "greenfield" or new construction labor estimates as a starting point. Labor to remove and replace given SSCs is then estimated by factoring in operating plant constraints which affect labor productivity. These constraints include factors such as access restrictions, congestion, interference with non-target systems and structures, radiation impacts, and manageability aspects. For those activities for which this method was used, the present estimates of labor requirements to accomplish major refurbishment and replacement activities took into account the specific environment

under which the work would be performed. This included area-specific radiation dose rates if the work had to be performed in a radioactive environment (NUREG/CR-5035).

Distinctions between craft and unskilled workers were also developed on an activity- by-activity basis. Most of the SMITTR activities are assumed to be performed by trained technicians, who were treated as being the equivalent of skilled craftsmen. Unskilled labor was assumed to be used for some of the major replacement/refurbishment work. The ratio of craft to unskilled labor was estimated based on engineering experience. This ratio was determined separately for each activity for which some mix of both craft and unskilled labor could realistically be assumed.

Estimates of on-site administrative and engineering labor requirements for each activity were derived from the estimates of craft and unskilled labor hours. For most activities, engineering labor was assumed to be 15 percent of the craft and unskilled labor hours, and administrative efforts were taken to be 5 percent. However, engineering labor for certain activities was based on estimates presented in the industry pilot and lead plant studies on plant life extension.

Health physics (HP) support labor efforts were estimated based on the occupational radiation exposure incurred in the conduct of activities performed in a radiation environment. Previous studies (NUREG/CR-5236) indicated that typical nuclear plant expenditures for radiation protection services are in excess of $10,500 per person-rem1 of radiation exposure incurred. Of this amount, about 85 percent is labor expenditures, and the balance is attributable to materials, equipment, etc. The hourly cost of providing HP support was assumed to be $63.00 (NUREG/CR-4627). Using these figures, an estimate of 127 person-hours per person-rem of exposure was established and used in estimating HP labor hours.

All labor estimates reflect incremental on-site personnel requirements only. Additional engineering and administrative support would very likely be required for some activities, especially for major refurbishment and replacement efforts. These efforts are assumed to take place at locations remote from the reactor plant sites and would not contribute to local environmental or socioeconomic impacts. However, these off-site costs are separately accounted for to make the estimates of license renewal costs more comprehensive.

Labor costs were derived once the labor hour estimates were established. The hourly rates used for each labor category were as follows:

Administrative = $40.80
Craft = $41.30
Engineering = $45.80
Health Physics = $63.00

These hourly rates are fully burdened to reflect fringe benefits and indirect or overhead costs. They are based on electric utility wage surveys conducted by the Bureau of Labor Statistics and reflect 1994 dollars. The rates used are U.S. averages; higher or lower rates may prevail in specific geographic regions.

B.3.2.2 Occupational Radiation Exposure

Occupational radiation exposures were estimated for all activities involving radioactive systems or work in radioactive areas. Three equivalent average dose rates were assumed for the activities considered in this assessment. These rates were 0.015 rem/h for high radiation zone activities, 0.0075 rem/h for average or medium conditions, and 0.0025 rem/h for low radiation zones. These dose rate ranges were derived from a review of actual experience for both major replacement/refurbishment activities and routine surveillance and inspection activities. The rates as derived are based on the total labor hours taken to accomplish a task and the total exposure recorded for that task. As such, they take into account both the time spent in radiation zones and that spent in nonradioactive areas associated with the conduct of a particular activity. They also reflect actions taken to reduce exposures, such as application of shielding and decontamination. Exposures were determined by multiplying the total labor hours for craft and unskilled workers for a given activity by the high, medium, or low dose rates.

Estimates of occupational radiation exposure for most of the SMITTR activities included in the present assessment used the foregoing average exposure rates. Particular dose rates were assigned to a given activity based on the location and relative radiation levels of the SSC addressed by the SMITTR action.

Exposure estimates for major refurbishment/replacement actions were typically handled on an activity-by-activity basis. Estimates for activities for which data from actual experience were available used that actual experience. Steam generator replacement and recirculation piping replacement provide examples of activities for which actual radiation exposure data are available. For such cases, the total labor hours were spread among the three standard dose rates in a manner which resulted in total job exposures matching those from actual experience.

Major activities for which no actual exposure data were available employed a slightly different approach for exposure estimates. For most of these activities total labor estimates were derived using NRC's generic cost estimation methods (NUREG/CR-4627; NUREG/CR-5236). Job-specific radiation dose rates prevalent for each activity were assessed based on surveys of typical conditions for both BWRs and PWRs (NUREG/CR-5035). These estimates took into account the likelihood of decontamination or other dose-reduction measures being applied, and the raw dose rate data were adjusted accordingly. Similarly, these cases took into account the time actually spent in the radiation field.

B.3.2.3 Radioactive Waste Generation

This effort initially sought to define radioactive waste generation according to classical designations of dry wastes, Class A, B, or C; dry mixed wastes (radioactive wastes mixed with hazardous chemicals); wet wastes, Class A, B, or C; or wet mixed wastes. A review of current practices for the nuclear industry indicated that essentially none of the radioactive wastes presently shipped from nuclear plants for burial are wet wastes. Radioactive liquids are decontaminated or solidified on-site or at contractor facilities, eliminating the need for burial of the liquids. A review of the types of dry wastes likely to be generated by the activities carried out in support of license renewal and plant life extension indicated that most of these could be considered as dry Class A waste. No Class B or C wastes were identified. However, certain activities are expected to produce some greater-than- Class C (GTCC) dry wastes. This waste will result from the removal of neutron-activated materials from the reactor vessel or from the removal of materials located sufficiently close to the reactor core that activation is a problem.

The assessment of the volumes of radioactive waste to be disposed of, and the estimation of labor requirements associated with the in-plant handling of the waste, requires that DAW be defined or classified as compactible or noncompactible. Compactible DAW is amenable to significant volume reduction by compaction, incineration, or other processes. The as- shipped or as-processed volume of this waste is typically factors of 5 to 100 less than the as-generated volume. Noncompactible DAW, on the other hand, typically has an as-packaged volume which is greater than the as-generated volume because of the difficulty of achieving high packing factors with the noncompactible materials involved. The extent of volume reduction achieved is typically referred to as the volume reduction factor (VRF). This factor is defined as:

The current assessment used a VRF of 10 for compactible DAW to estimate as- shipped volumes from the as-generated values. This VRF is reasonably representative of current industry experience, and it assumes a modest amount of improvement in waste processing in the future for the industry as a whole. A VRF of 0.8 (i.e., a volume increase) was used for estimating the as-shipped volume of noncompactible DAW requiring disposal. This factor also assumes the use of state-of- the-art technology in the packaging of the noncompactible wastes.

Volumes and types of waste generated were estimated on an activity-by-activity basis. For refurbishment, overhaul, or replacement activities, estimates of noncompactible wastes were based on the size of the items involved (i.e., the physical dimensions of the target items). Associated compactible wastes were estimated based on typical ratios of compactible-to- noncompactible volumes. In addition, compactible and noncompactible waste volumes were derived from information found in published reports for major repairs undertaken at nuclear power plants.

Fluid volumes generated as a result of decontamination activities were estimated based on typical volumes generated for similar activities. All fluids used in these processes were assumed to be processed through filters or resin beds to remove contamination, with the result that no radioactive liquids needed to be disposed of. The resulting resins or filters are solidified and disposed of as dry wastes.

All inspection, surveillance, and test activities conducted on radioactive systems or in radiation areas were also assumed to generate radioactive wastes. For such activities, compactible DAW was assumed to be generated at the rate of 0.0113 m3 (0.4 ft3) per craft or unskilled worker labor hour (as-generated volume). This generation rate represents a rough average of waste production based on experience with both major replacement activities and with more routine SMITTR activities. These wastes result from the laundering and disposal of anti-contamination clothing and other protective equipment, from plastic sheeting used to restrict the spread of airborne contamination, and from the use of other such materials.

Some site labor must be expended in handling and processing the wastes generated by the activities performed in support of license renewal. In addition, some incremental radiation exposure will be incurred by those workers handling these wastes. The current assessment estimated the labor using the following rates:

Noncompactible DAW = 10.6 h/m3 (0.3 h/ft3)
Compactible DAW= 17.7 h/m3 (0.5 h/ft3)

These rates apply to the as-generated volumes of wastes. Similarly, radiation exposure incurred in the in-plant handling of radioactive wastes was estimated using a rate of 0.0012 person-rem per cubic foot of waste in the as-shipped form, and this rate applies to both compactible and noncompactible types of waste. (These rates were obtained from NUREG/CR-4627).

At least some of the waste processing activities can occur during reactor operating periods rather than being completed during the outage times when the wastes are generated. Such processing will reduce (or at least not add to) the labor burden on-site during the outages when large work forces are needed. However, the current estimates assume that the waste handling efforts occur during the same periods that the wastes are generated. This approach adds somewhat to the conservatism of the impact production rates presented here.

B.3.2.4 Waste Disposal Cost

Costs associated with the disposal of low-level radioactive wastes generated as a result of license renewal-related activities were estimated separately for BWRs and PWRs, taking into account the projected volumes of noncompactible and compactible DAW generated by each reactor type for each license renewal program. The estimates utilized the base information developed in NUREG/CR-4555, Rev. 1. However, the costs were modified to reflect the rapid escalation in burial costs resulting from the formation of regional compacts and the likely closure or limited availability of the existing low-level waste disposal sites. The analysis performed indicated that burial costs at the regional compact sites are projected to be in the range of $7,000 to $16,000/m3 ($200 to $450/ft3). The current estimates used $12,000/m3 ($340/ft3) for burial. The costs associated with handling, on-site temporary storage, and transportation of the DAW were added to the burial costs. These generic estimates were based on an assumed plant-to-burial-site distance of 1,600 km (1000 miles) and the wastes were assumed to have relatively high activity levels for the purpose of estimating costs.

Steam generators replaced as part of the PWR conservative case license renewal program are contaminated and could be disposed of as low-level radioactive waste. Their volume is quite large (approximately 1,130 m3 or 40,000 ft3), however, and the spent units are typically stored on-site rather than buried at an approved waste disposal site. Special storage buildings have been constructed at the affected reactor sites to house the spent steam generators. The cost of the storage buildings is estimated to be about $1 million and is included in the overall waste disposal cost estimates.

B.3.2.5 Capital Costs

Capital costs were estimated for those activities involving the application or installation of new equipment, materials, and hardware. Wherever available, the estimates were established based on recent industry experience for the addition or replacement of the items of concern. Where such cost information was not available, two other approaches were used. The first relied on NRC's generic cost estimation methods and databases (NUREG/CR-4627). This methodology draws on the Energy Economic Data Base (EEDB) developed by the U.S. Department of Energy (DOE/NE- 0051/1; DOE/CR-5764). The EEDB provides estimates of both labor and material/equipment quantities and cost. This information has been developed for modern, large PWR and BWR plant designs. The EEDB presents reasonably detailed information which covers most areas of the plant, including both the nuclear steam supply system (NSSS) and the balance of plant. However, this cost base does not include any detail of the NSSS equipment or hardware capital costs. The second alternative approach to estimating capital cost where no recent industry experience was available was based on the use of detailed, actual construction cost breakdowns from a U.S. nuclear plant constructed several years ago. This cost base provided sufficient breakdown of the entire plant, including detail on the NSSS component and subcomponent cost. Where this base was used, the costs reported were escalated to 1994 dollars, and, where appropriate, the costs were adjusted to reflect size differences between this base plant and the 1000-MW(e) reference size adopted for the current estimates.

B.3.2.6 Other Costs

Two other cost elements were considered to define license renewal-related costs in a more comprehensive manner: home office costs and replacement energy costs. The home office costs account for off- site engineering and quality assurance (QA) expenditures. This category of costs accounts for the design, analysis, safety review, and documentation efforts typically associated with modifications at nuclear power plants. Home office costs also allow for QA functions and activities carried on to support these modifications. Home office engineering and QA efforts were estimated using NRC's generic cost estimation methodology (NUREG/CR-4921). Based on surveys of a wide range of actual physical modifications made to operating nuclear power plants, this methodology has established that, on average, the engineering and QA functions typically amount to about 25 percent of the direct modification costs. This basis accounts for both on-site and off- site engineering and QA functions. The direct costs include direct (unburdened) labor as well as the cost of materials, equipment, and hardware associated with a particular modification. Because the on-site efforts were separately accounted for as described in Section B.3.2.1, estimates of the off-site work were developed using the 25 percent of direct costs approach and subtracting from this the estimate of on-site engineering costs.

Replacement energy costs can be a major contributor to overall project cost if plants remain out of service for extended periods. An assessment was made of replacement energy costs as they relate to the example license renewal programs. This evaluation reviewed the replacement energy costs per day of plant downtime (NUREG/CR-4012 1992) separately for BWRs and PWRs. Weighted averages were taken for several plants whose electrical generating capacity was nearest to 1000 MW(e). For PWRs, the daily replacement energy cost estimated on this basis was $342,000 (1994 dollars). For BWRs, this figure was estimated to be $287,000 (1994 dollars) per day. Replacement energy cost depends on several factors, including plant size, location and load pool, season, and cost fluctuations in non-nuclear alternative energy sources. However, the estimates cited here are representative of U.S. plants in the 1000-MW(e) size range.

B.4 Results

[**Prev** | **Next** | **Top of file**]

This section summarizes the quantitative results developed in this evaluation. All key impact initiators are discussed, including labor, occupational radiation exposures, capital costs, radioactive waste generation, and waste disposal costs associated with the conduct of activities carried out in support of license renewal and extended plant life. This section also discusses elements of license renewal which do not necessarily contribute to environmental or socioeconomic impacts but which play important roles in assessing the overall economic viability of license renewal. These are the elements of off-site costs and replacement energy costs. Finally, this section provides a comparison of industry-

developed license renewal cost estimates with those developed in this assessment. Both typical and conservative case scenario results are discussed.

B.4.1 BWR and PWR License Renewal Program Impact Initiators

As noted previously, the typical license renewal program scenarios presented herein are intended to be representative of those the majority of nuclear plants seeking license renewal might experience regarding major refurbishment and enhanced SMITTR activities needed to satisfy NRC requirements and better ensure reliable and economical plant life extension. The conservative case scenarios, on the other hand, are intended to reflect what might occur at a few outlier plants requiring much more extensive refurbishment/replacement activities than are typical of the reactor population as a whole. As such, the typical programs are estimated to have rather modest environmental impacts compared with those expected for the conservative case scenarios.

Tables B.4 and B.5 present summaries of the license renewal program impact initiator quantities for the typical and conservative case license renewal scenarios, respectively. Each table shows the quantities separately for BWRs and PWRs. Similarly, each table shows the impact quantities generated during the different plant modes. Note that the impact quantities are presented on a per-occurrence basis for refueling outages, current-term outages, and the 5- year ISI outage, each of which occurs more than once. The totals, however, reflect the summation over all occurrences of all activities performed in support of license renewal. Tables B.4 and B.5 also show the labor and costs associated with incremental activities performed during full-power plant operation. The labor hours and costs for this category represent the totals accrued over the entire period of the renewed licenses. All values shown are intended to capture only incremental effects associated with license renewal, and they exclude baseline activities which represent a continuation or evolution of current practices related to the operation and maintenance of nuclear power plants.

The types and extent of activities included in the conservative case programs, especially the extensive major replacement/refurbishment activities included and their resulting impact initiator estimates as reflected in Table B.5, are thought to reasonably bound what might be needed for any individual nuclear plant site in pursuit of license renewal and plant life extension.

The values in Tables B.4 and B.5 indicate that most of the environmental impact initiators accrue during the major refurbishment outages. For the conservative scenarios, the current-term outages also result in considerably higher levels of impact quantities being generated compared with the more routine outages. The current-term and major refurbishment outages are the periods when major replacement and refurbishment activities performed in support of license renewal and extended plant life are assumed to occur. For the conservative case scenarios, the impacts produced are primarily from activities performed to ensure that current safety and licensing bases are maintained, as well as to help ensure that plant economic and availability/reliability goals are met. Relatively few of the conservative case impacts are attributable to the enhanced aging management of SSCs important to license renewal called for by the License Renewal Rule. The rule requirements have a relatively greater impact on the typical programs, because these programs have fewer major refurbishments compared with the conservative case scenarios. The specific effects of the 10 CFR 54 rulemaking on the impact quantities are discussed in Section B.4.3.

A comparison of the figures in Tables B.4 and B.5 shows that the typical license renewal program impact initiators are on the order of 15 to 25 percent of the quantities estimated for the conservative case scenarios. Figure B.3 graphically illustrates the overall fraction of the total impacts for the typical programs relative to the conservative case scenario totals. The values shown represent a linear, composite average of the various impact category totals listed in Table B.4 relative to the totals presented in Table B.5. Thus, the conservative case scenarios are estimated to have five to six times the impact quantities of typical license renewal programs. This result is to be expected because of the extensive major refurbishment activities assumed to be undertaken by a few outlier plants represented by the conservative case scenarios.

Figure B.3 Typical program impacts relative to corresponding conservative case impacts.

Note that the additional on-site personnel figures cited in Tables B.4 and B.5 represent the average incremental work force sizes needed to accomplish license renewal-related activities assuming this work is uniformly spread over the entire duration of each separate outage. Peak work force sizes for each outage will be higher, as discussed in Section B.4.1.1.

B.4.1.1 Labor Hours and On-Site Staffing

The estimates of incremental labor shown in Tables B.4 and B.5 indicate that roughly 0.5 to 0.8 million labor hours could be expended for typical license renewal activities for both BWRs and PWRs, whereas the corresponding labor hour estimates for the conservative case scenarios are on the order of 5 to 7 million. These estimates include administrative, engineering, health physics, craft, and nonskilled labor. For the conservative case scenarios of Table B.5, about 95 percent of the labor hours for both BWRs and PWRs are attributable to the major activities that occur during the current-term outages and the major refurbishment outage. Thus, for the conservative case scenarios, these major activities tend to dominate the impact quantities compared with the more routine activities occurring at normal refueling and at the 5- and 10-year ISI outages. The labor values shown are greater for the conservative case PWR than for the corresponding BWR primarily because of the large amount of labor associated with the replacement of all four steam generators assumed in the reference PWR plant design. Table B.4 indicates that the typical case BWR labor hours are about 30 percent greater than the corresponding PWR estimates. The differences here are primarily the result of a few additional SMITTR activities being performed for the BWR over the remaining life of the plant, as well as a greater number of components that are subject to these activities.

The labor hour estimates for the different license renewal scenarios are illustrated in Figure B.4.

The additional on-site personnel estimates reflect both the labor estimates and the assumed outage durations. The conservative case license renewal programs assumed that the major refurbishment outage would be 9 months long. As discussed in Section B.3.1.3, this duration appears to be reasonable. The conservative case major refurbishment outage would require about 870 additional on-site staff for the BWR and about 1700 incremental on-site personnel for the PWR to accomplish the example program aging management activities in the allotted time. As previously noted, the larger work force required for the PWR primarily results from the large effort associated with steam generator replacement. These estimates address personnel needed over and above those who would be on-site to perform normal refueling and maintenance tasks. Most of the other outages require roughly the same number of incremental on- site personnel for both reactor types. Note that for each type of outage, the staffing indicated is in all cases incremental to the staff needed to carry out current practices. Also, these estimates reflect average incremental staff assuming the work is spread uniformly over the entire outage duration.

Figure B.4 Incremental labor hours.

For the typical scenarios, the incremental on-site staffing requirements are relatively modest. The largest staff increment is required for the major refurbishment outage, as this is the time when the few major refurbishment or replacement activities in these programs are assumed to be carried out.

The number of on-site personnel estimated in Tables B.4 and B.5 is not strictly proportional to the outage duration and the total labor hours expended during a given outage. This is because a 50-hour work week was assumed for craft, health physics, and nonskilled workers, whereas the engineering and administrative personnel were assumed to have a 40-hour work week. Also, the ratio of engineering and administrative hours to craft, health physics, and nonskilled worker hours varied from activity to activity.

Figure B.5 graphically indicates the highest average number of temporary workers needed to carry out license renewal-related activities for each of the four license renewal scenarios. This figure shows the largest requirement for each scenario as identified in Tables B.4 and B.5. Note that all estimates of incremental on-site personnel displayed in Tables B.4 and B.5, and in Figure B.5, were arrived at assuming level staffing for the entire duration of a given outage.

The extent of certain socioeconomic impacts such as housing will depend on peak numbers of personnel on-site rather than on the average numbers employed over a given outage. Therefore, additional analyses were performed to define probable staffing profiles throughout the major outages. Because the outages of interest would also include defueling/refueling and work typically conducted during present-day outages (e.g., ISIs, routine maintenance), the temporary workers needed to accomplish these routine activities must also be considered in estimating peak work force sizes. Table 2.4 of Chapter 2 noted that, based on a recent industry survey, there are typically 750 to 800 additional workers on- site at a nuclear plant during routine planned outages. The assumption was made that these workers are needed for a period of 2 months per outage. Therefore, these more routine efforts performed by temporary workers add up to a total of about 1600 person-months of effort. This effort needed to accomplish more routine outage activities was added to the license renewal-related labor efforts identified in Tables B.4 and B.5 to arrive at estimates of peak work force sizes.

Figure B.5 Outage average incremental on-site staff.

Figure B.6 Additional personnel required to perform conservative case pressurized-water reactor license renewal major refurbishment outage activities.

Figure B.7 Additional personnel required to perform conservative case boiling-water reactor license renewal current-term outage activities.

Figure B.8 Additional personnel required to perform typical case pressurized- water reactor license renewal current-term outage activities.

Figure B.9 Additional personnel required to perform typical case boiling- water reactor license renewal major refurbishment activities.

Figures B.6 through B.9 present monthly projections of temporary worker staffing needed to carry out both license renewal activities and routine refueling, and ISTM activities. The most limiting cases are shown for each license renewal scenario. Figure B.6 shows the projected number of temporary personnel needed during the major refurbishment outage for the conservative PWR license renewal scenario. This outage was assumed to require 9 months. The monthly staffing needs were arrived at by developing a schedule for carrying out each of the different activities to be accomplished during this outage. These schedules were similar to those presented in Figures B.1 and B.2, but they were more complete in that all activities slated for the outage of interest were included. An effort was made to average out the work force over the entire outage duration to the extent possible. However, considerable peaking does occur because not all activities can proceed simultaneously. Figure B.6 separately identifies temporary personnel needed to accomplish license renewal activities versus those needed for more routine outage activities. The upper figures on the bars in Figure B.6 represent the total number of temporary workers needed during each particular month of the outage; the lower figure, where present, is the number needed to accomplish the incremental license renewal-related activities only. Based on this projection, the temporary work force needed during the major refurbishment outage for the conservative PWR license renewal scenario is estimated to be about 2300. This contrasts with the 1700 additional workers averaged over the entire outage as identified in Table B.5, which excluded consideration of the work force needed to carry out refueling and other routine activities. The month-to- month temporary staffing needs presented in Figure B.6 are by no means optimized, but they do indicate that the peak numbers of workers considerably exceeds estimates based on averages over the entire outage duration.

Figure B.7 presents estimates of peak temporary worker staffing needs for the BWR conservative license renewal scenario. In this case, the highest staffing needs are projected to occur during the current-term outages rather than during the major refurbishment outage. This is the most limiting BWR outage, because although the number of temporary workers on-site needed to accomplish incremental license renewal-related activities was about equal for both the current-term outage and the major refurbishment outage (see Table B.5), the 1600 person-months of effort needed for refueling and routine outage tasks must be accomplished in a 4-month period rather than a 9-month period, giving a

greater overall total for the current-term outages. The projections in Figure B.7 indicate that the peak temporary work force needed for this BWR license renewal scenario is 1440 personnel.

Temporary worker needs for the typical license renewal scenarios are shown in Figures B.8 and B.9 for PWRs and BWRs, respectively. The peak staffing needs for the PWR occur during the 3-month current-term outage. In this scenario, the number of temporary workers needed during this outage to accomplish incremental license renewal-related activities is very modest, and the majority of the temporary staff would be needed to carry out refueling and more routine outage activities. The peak staffing needs are only about one-third of those needed for the conservative PWR license renewal scenario. Figure B.9 for the typical BWR license renewal scenario indicates that slightly more than 1000 temporary workers would be needed during the peak period of the major refurbishment outage. This is the most limiting outage staffing need for the typical BWR case.

B.4.1.2 Radioactive Waste Volumes

The waste volumes shown in Tables B.4 and B.5 include all types of low-level radioactive waste generated as a result of incremental license renewal and plant life extension activities. The volumes are those which remain after the wastes have been processed for storage or burial, and they include the volume of the burial or storage containers. The compactible waste items are assumed to undergo volume reduction. An average VRF of about 10 was used. This VRF is consistent with the use of currently available supercompactor technology. Even higher VRFs are achievable with incineration techniques, but these were not assumed here to preserve the conservative nature of the overall estimates. The noncompactible items of waste, on the other hand, are assumed to require a burial or storage volume which is about 20 percent greater than the initial volume of the solid article resulting from less-than-perfect packing factors associated with this type of waste.

Table B.4 indicates that the typical case BWR scenario is estimated to produce about 226 m3 (8000 ft3) of low-level radioactive waste as a result of license renewal-related activities. The corresponding volume for the PWR is about 170 m3 (6000 ft3). The greater volume for the BWR is because of the slightly greater number of SMITTR activities and the greater number of SSCs subject to these activities compared with the PWR. In addition, activities on turbine plant equipment for the BWR generate radioactive waste, whereas similar activities for the PWR do not.

The considerably larger volume of waste noted in Table B.5 for the PWR conservative case compared to the BWR conservative case is almost solely due to the effects of steam generator replacement in the PWR. These very large items contribute about 1,130 m3 (40,000 ft3) to the total PWR waste volume, and there are no comparable items in the BWR. The steam generators that have been removed to date from operating reactors have typically been stored on-site in special facilities constructed for that purpose rather than being disposed of at licensed burial facilities.

Total waste generation quantities are illustrated in Figure B.10 for both the typical and conservative case scenarios for each plant type. The example license renewal programs generated small amounts of GTCC wastes. These wastes are neutron-activated materials removed from the reactor vessels and/or reactor internals. The estimated amounts for the typical scenarios are 28 m3 (1000 ft3) for BWRs and 14 m3 (500 ft3) for PWRs, and for the conservative case scenarios about 44 m3 (1540 ft3) for BWRs and 14 m3 (500 ft3) for PWRs. These GTCC wastes were not included in the volumes cited in Tables B.4 or B.5. They are assumed to be retained on-site rather than shipped off-site for burial.

B.4.1.3 Occupational Radiation Exposure

Figure B.11 displays the estimates of incremental occupational radiation exposure incurred in carrying out license renewal activities. As shown in Figure B.11 and as indicated in Tables B.4 and B.5, incremental radiation exposure is projected to be on the order of 250 to 450 person-rem for the typical case scenarios and about 2500 person-rem for both reactor types for the conservative case scenarios. Because current average annual exposures for U. S. nuclear power plants are about 500 person-rem, the license renewal-related incremental occupational exposure for the typical scenarios represents the equivalent of about one additional year of operation. Given a 20-year incremental operating period, the license renewal-related activities appear to add about 5 percent to the cumulative exposure that would

otherwise be expected over that period of extended plant life. For the conservative case scenarios of Table B.5, the estimated incremental exposure of roughly 2500 person-rem represents about five times the currently experienced annual exposure. However, the estimates from the conservative case license renewal programs are highly conservative because they encompass a greater variety and extent of activities than is expected from most plants pursuing license renewal. The largest fraction of the radiation exposure is expected to accrue from the major refurbishment activities for both reactor types. The bulk of the exposure is estimated to occur during the major refurbishment outage, and to a lesser extent during the current-term outages. The BWRs are expected to incur somewhat greater occupational radiation exposures than are the PWRs.

Figure B.10 Incremental low-level waste generated.

Figure B.11 Incremental occupational radiation exposure.

B.4.1.4 Waste Disposal Costs

The costs for disposing of low-level radioactive wastes generated as a result of license renewal-related activities are estimated to be about $3 million for the typical case scenarios and about $26 million to $37 million for the conservative case scenarios. Relative to the total costs associated with license renewal activities, these costs represent about 3 to 4 percent of the totals. As noted in Section B.3.2.4, waste disposal costs include charges for waste handling and packaging, short-term on-site storage, transportation, and burial. For the PWR conservative case scenario, the spent steam generators are assumed to be stored on-site rather than sent to an approved burial site for permanent disposal.

A cost of roughly $1 million has been assumed for the on-site steam generator storage facility, and this cost has been added to the overall waste disposal cost for the conservative case PWR. Waste disposal costs are graphically displayed in Figure B.12.

B.4.1.5 Capital Costs and On-Site Labor Costs

In addition to waste disposal costs, Tables B.4 and B.5 display labor costs and capital costs (costs associated with the purchase of materials, equipment, and hardware). The labor costs include those attributable to all categories of on-site labor, including administrative, engineering, craft, unskilled, and health physics. The costs are based on wage rates appropriate to each labor category and the labor mix as discussed in previous sections.

The values in Table B.4 indicate that, for the typical cases, capital costs are roughly twice the labor costs. Total on-site (labor plus capital) costs are estimated to be about $90 million for the typical BWR and about $80 million for the typical PWR. The higher costs for the BWR are consistent with the greater number of incremental SMITTR activities and greater number of SSCs included in the BWR program.

For the conservative case results displayed in Table B.5, the trends of capital versus labor costs are essentially reversed. That is, labor costs are higher than the capital costs for both reactor types. This relatively higher labor cost is attributable to the fact that many of the major refurbishment/replacement activities of the conservative cases involve radioactive SSCs and work in radiation zones. Work in radiation zones is less productive than work in nonradiation zones, and relatively more labor hours must be expended to accomplish a given activity. Capital costs, on the other hand, are essentially independent of whether the equipment or materials involved are in radiation zones. The combined labor and capital costs for the conservative case are estimated to be about $400 million for the BWR and about $460 million for the PWR. The higher costs for the PWR are primarily due to the large labor cost associated with steam generator replacement.

Labor and capital costs for both the typical and conservative case license renewal scenarios are illustrated in Figure B.13.

B.4.1.6 Off-Site Labor Costs

Off-site engineering and QA work are estimated to cost about $13 million-$15 million for the typical cases and about $38 million-$42 million for the conservative case scenarios. These are the off-site costs in this category carried out in support of the SMITTR and refurbishment activities. Off- site labor costs are depicted in Figure B.13.

Figure B.12 Incremental waste disposal costs.

Figure B.13 Incremental capital and labor costs.

B.4.1.7 Total Costs

All costs shown in Tables B.4 and B.5 are in 1994 dollars. They also are presented as "overnight" (undiscounted) costs. That is, they represent costs as if all activities of each program were performed in a very short period of time rather than being spread over approximately 28 years as is envisioned for the actual scenarios. Time-value-of-money effects are not included in Tables B.4 or B.5, and no allowance has been included for costs of financing during the construction/refurbishment stages. Also, replacement energy costs are excluded from the figures presented in these tables. Those costs are discussed below.

Table B.4 indicates that the total program costs for the typical BWR are estimated to be about $110 million, and the corresponding PWR costs are about $90 million. Based on a 1000-MW(e) reference plant size, these estimates indicate license renewal-related costs of roughly $100/KW(e) for the typical renewal cases. Table B.5 indicates that the conservative case program costs are estimated to be in the range of $440 million to $500 million, with corresponding unit costs between $440/KW(e) and $500/KW(e).

B.4.1.8 Replacement Energy Costs

Replacement energy costs were estimated based on a rate of $290,000 per day of plant downtime for BWRs and $340,000 per day for PWRs (NUREG/CR- 4012 1992). The typical BWR and PWR license renewal programs have a cumulative incremental downtime of 5 months, whereas for the conservative case scenarios the incremental downtime is estimated to be about 15 months. This is the time required to accomplish the SMITTR and major refurbishment activities making up the programs. Cumulative downtime costs, therefore, are estimated to be about $44 million for BWRs and $52 million for PWRs for the typical scenarios and about $130 million to $155 million per plant for BWRs and PWRs, respectively, for the conservative case scenarios (overnight costs).

Figure B.14 illustrates the total estimated license renewal-related costs previously discussed, including replacement energy costs. This figure indicates the relative magnitude of the major cost components.

B.4.1.9 Local Purchases

Of the capital costs reported in Tables B.4 and B.5, a small fraction may possibly be spent locally. Items such as concrete, rebar, formwork, certain electrical wire and cables, and similar materials could conceivably be purchased from local suppliers in the vicinity of nuclear plants. The cost of these items used here for the typical programs was estimated to be less than $1 million for each plant type, and possibly about $5 million total for each conservative case scenario. These purchases occur for activities performed during the current-term outages and the major refurbishment outage.

B.4.2 Comparisons to Industry Costs for Plant Life Extension

The nuclear power industry, the U. S. Department of Energy, and other entities have evaluated the benefits and costs of nuclear plant life extension. They have estimated both the likely costs associated with plant life extension and the break -even costs. The break-even costs indicate the point at which nuclear plant life extension is as costly as would be the construction of alternative power sources such as a new coal plant or a new nuclear plant.

Figure B.14 Total license renewal costs.

Table B.6 compares the costs of license renewal and extended plant life developed for the GEIS with estimates prepared by industry. The table includes both typical and conservative case estimates. The GEIS estimates as presented in the table are all given on an overnight basis (i.e., both financing costs and present-worth effects have been excluded from the figures). The GEIS estimates include all cost elements presented in Tables B.4 and B.5, and they include replacement energy costs as well. These are shown separately for BWRs and PWRs. Table B.6 indicates that the GEIS estimates for plant lift extension costs range from about $150 million to $570 million for the BWR typical and conservative case license renewal programs, respectively, and about $140 million to $650 million for the corresponding PWR programs. On a dollar per kilowatt basis, and based on the reference 1000-MW(e) plant size, these costs are in the range of $140 to $150/kw for the typical scenarios and from about $570 to $650/kw for the conservative case scenarios. The available industry estimates for plant life extension are shown in Table B.6 in dollars per kilowatt (SAND88- 7095 1988; McCutchan 1988). They range from about $230/kw to almost $700/kw. The GEIS estimates fall roughly within the range developed by the industry sources. The typical case scenarios fall somewhat below the industry estimates, whereas the conservative case estimates are at the higher end of the industry estimates.

B.4.3 Other Impacts and Considerations

This section briefly discusses two aspects related to license renewal program costs. These are the time-value-of-money effects (present worth) and the portions of the programs directly attributable to meeting the new aging management requirements imposed by 10 CFR Part 54, Rules for Nuclear Plant License Renewal.

B.4.3.1 Present Worth Considerations

The estimates presented in Tables B.4, B.5, and B.6 were given on an "overnight" cost basis, and did not account for the fact that the expenditures are spread out in time over a considerable period. Table B.7 shows the effects of considering the time-value-of- money on the total program costs. Present value program costs are shown for three discount rates: 0 percent, 5 percent, and 10 percent. All costs are given in 1994 dollars. The datum time used to develop the values in Table B.7 is a representative point in a program at which a licensee would submit the application for license renewal to the NRC. As was shown in Figure 2.3 of Chapter 2, this point is assumed to occur 12 years before the expiration of the initial 40-year license period, and is 32 years before the end of plant life, assuming a total plant life of 60 years. The figures shown for the 0 percent discount rate are the same as those presented in Tables B.4, B.5, and B.6, and they include off-site labor costs and replacement energy costs.

The example license renewal programs incurred the major portion of the costs in the first 12 years following the submittal of a license renewal application. This is the period when major refurbishment/replacement activities are assumed to take place. In spite of the fact that these expenditures are not assumed to occur further out in time relative to the datum time point used, discounting does significantly reduce the effective cost of the license renewal programs.

Table B.6 Comparisons of industry plant life extension cost estimates (all costs in millions of 1994 dollars)

	PWR[a]		BWR[b]	
	Conservative	Typical	Conservative	Typical
GEIS estimates (million dollars)				
On-site labor cost	269	21	202	28
Capital costs	155	54	171	63
Total on-site costs	461	78	399	92
Off-site labor	38	13	42	15
Incremental replacement energy costs[c]	155	52	132	44
Total estimated costs	**654**	**143**	**573**	**151**
$/kw	654	143	573	151

Industry estimates ($/kw)[d]		
Monticello		634
General Electric		230
Surry	1331	
Westinghouse	698	

[a] PWR = pressurized-water reactor
[b] BWR = boiling-water reactor
[c] @$ 287,000per day (BWR) or $342,000 per day (PWR)
[d] SAND88-7095, escalated to 1994 dollars

Table B.7 Time-value-of-money effects on nuclear plant license renewal program costs

	Program costs (million dollars)			
	PWR[a]		BWR[b]	
Discount rate (%)	Conservative	Typical	Conservative	Typical
0	694	183	605	186
5	436	107	381	107
10	291	68	256	67

[a] PWR = pressurized-water reactor
[b] BWR = boiling-water reactor

B.4.3.2 10 CFR Part 54 Impacts

Certain of the aging management activities making up the example programs used here are incremental requirements called for by 10 CFR Part 54. The example list of activities assumed attributable to the Part 54 rule are identified in Table B.8, and they represent a subset of those presented in Tables B.1 and B.2. The list of activities in Table B.8 was derived from the 10 CFR Part 54 Regulatory Analysis (NUREG/CR-1362) and from evaluations of the actions contemplated for the lead plant programs (Sciacca January 3, 1993; January 13, 1993). Other interpretations of these sources could yield different results. However, the example lists of activities presented in Table B.8 are thought to be reasonably representative of what might be needed to satisfy the requirements of the license renewal rule. This list is adequate for estimating impacts attributable to 10 CFR Part 54.

Many of the activity descriptions in Table B.8 are presented on a per-SSC basis, but the total program includes many repetitions of each activity to cover multiple similar SSCs as well as repeat actions on the same SSC. The activities listed are all SMITTR actions, as opposed to major refurbishment activities. Also, these actions address only those SSCs which are important to license renewal, and the Part 54 impacts exclude actions likely to be taken by licensees solely for economic and plant availability purposes.

Table B.9 presents estimates of the impact initiators attributable to the enhanced aging management activities called for by 10 CFR Part 54. The figures indicate that the impacts attributable to the Part 54 rule are only a small fraction of the conservative values shown in Tables B.4 and B.5. The costs shown in Table B.9 represent overnight costs, and do not reflect any discounting for expenditures incurred over the 30 or more years assumed for the conduct of the subject activities.

The capital costs reflect the addition of new or enhanced monitoring and surveillance systems and equipment, as well as the costs of replacement hardware for SSCs on a routine basis. An example of the latter is valve internal components.

Table B. 8 and B. 9

B.4.4 Consideration of Other License Renewal Programs

The current effort focused on license renewal environmental impact initiators for two generic light-water reactor types: BWRs and PWRs. The resulting estimates are believed to encompass a high percentage of the potential environmental impact initiators which may accrue as plants undertake license renewal and plant life extension activities. The estimates of environmental impacts associated with nuclear plant license renewal can be refined in a number of ways. Because no commercial light-water reactors have yet applied for license renewal, the nature and characteristics of actual programs have yet to be fully defined. As noted previously, each plant's program is expected to be somewhat unique.

Alternative programs for license renewal and plant life extension are certainly likely, and the impacts of these alternative programs could be evaluated. Differences from the reference programs used to develop the current estimates are likely for both major refurbishment activities and SMITTR activities. The SMITTR programs used here are based on the safety-centered approach developed for the License Renewal Regulatory Analysis (Sciacca January 25, 1990; Sciacca February 20, 1990). Other ISTM programs are certainly possible, some of which may have greater impacts than those defined herein. Similarly, different major refurbishment programs can also produce significantly different environmental impacts from the representative programs used here. For example, a program could be based on a much more extensive use of ISTM, with less reliance on major refurbishment, than the programs used in the current assessments.

Although alternative programs could have been evaluated, the license renewal programs used to develop the current estimates of environmental impact initiators are believed to bound what might actually occur at most plants.

B.5 Endnotes

[**Prev** | **Next** | **Top of file**]

A discussion of the SI units used in measuring radioactivity and radiation dose is given in Appendix E, Section E.A.3.

B.6 References

[**Prev** | **Next** | **Top of file**]

The following references include those for Attachment 1.

Abbott, S. L., et al., "Westinghouse Reactor Vessel Life Extension Variance Study," p. 210 in *Proceedings of the Topical Meeting on Nuclear Power Plant Life Extension,* Vol. 1, American Nuclear Society, Snowbird, Utah, July 31-August 3, 1988.

DOE/CR-5764, *Phase VIII Update (1986) BWR Supplement for the Energy Economic Data Base Program,* United Engineers and Constructors, August 1986.

DOE/NE-0051/1, Phase VIII Update (1986) Report for the Energy Economic Data Base Program, United Engineers and Constructors, August 1986.

Eckert, G. (Kraftwerk Union Aktiengesellschaft, Offenbach, Federal Republic of Germany), "Replacement of Steam Generators and Recirculation Pipes in LWRs as Long-Lasting Measures to Extend Plant Lifetime," pp. 237-50 in *Proceedings of an NEA Symposium Held in Cooperation with the IAEA Nuclear Plant Life Extension,* February 1987.

EPRI NP-2418, *Extended Life Operation of Light Water Reactors: Economic and Technological Review,* Vols. 1-2, Electric Power Research Institute, Palo Alto, California, June 1982.

EPRI NP-4208, *The Longevity of Nuclear Power Systems,* Electric Power Research Institute, Palo Alto, California, August 1985.

EPRI NP-5002, Virginia Power Company et al., *LWR Plant Life Extension,* Electric Power Research Institute, Palo Alto, California, January 1987.

EPRI NP-5181SP and EPRI NP-5181M, Northern States Power Company, *BWR Pilot Plant Life Extension Study at the Monticello Plant: Phase 1,* Electric Power Research Institute, Palo Alto, California, May 1987.

EPRI NP-5289P, Virginia Power Company et al., *PWR Pilot Plant Life Extension Study at Surry Unit 1: Phase 1,* Electric Power Research Institute, Palo Alto, California, July 1987.

Katz, L. R., "The PLEX Aspects of the Storage or Disposal of Replaced Nuclear Components," p. 276 in *Proceedings of the Topical Meeting on Nuclear Power Plant Life Extension,* Vol. 1, American Nuclear Society, Snowbird, Utah, July 31-August 3, 1988.

Lott, R. G., and T. R. Mager, "Reactor Vessel Life Extension by Thermal Annealing," pp. 127-32 in *Proceedings of the ASME Pressure Vessel and Piping Conference,* Honolulu, July 1989.

Massie, H. W., et al., "A Systematic and Cost-Effective Approach to Nuclear Plant Life Extension," pp. 31-34 in *Proceedings of the International Conference on Nuclear Power Plant Aging, Availability Factor, and Reliability Analysis,* San Diego, 1985.

McBrien, H. W., "Pipes Replaced at Vermont Yankee in Record Time," *Nuclear Engineering International* (UK), 32, 28 (April 1987).

McCutchan, D. A., et al., "Analysis of Integrated Plant Upgrading/Life Extension Programs," p. 232 in *Proceedings of the Topical Meeting on Nuclear Power Plant Life Extension,* Vol. 1, July 31-August 3, 1988, Snowbird Utah.

Miselis, V., "The Westinghouse Reactor Vessel Life Extension Variance Study," *Proceedings of the Topical Meeting on Nuclear Power Plant Life Extension,* American Nuclear Society, Snowbird, Utah, July 31- August 3, 1988.

MITRE Corp., A *Topical Study on the Use of Nuclear Plant Aging Information in the Regulatory Analysis of License Renewal Alternatives,* WP-8800477, December 1988.

Moore, T., "Nuclear Plants: Life after 40," *EPRI Journal,* pp. 20-29, October/November 1990.

Morency, K. R., and M. S. McGough, "The Evolution of Steam Generator Replacement Projects in the United States," *Nuclear Plant Journal, pp.* 72, May/June 1989.

North Anna-1 Steam Generator Changeout Beats Goals," *Nuclear News,* p. 38, June 1993.

NUREG-1362, *Regulatory Analysis for Proposed Rule on Nuclear Power Plant License Renewal,* U.S. Nuclear Regulatory Commission, Washington, D.C., July 1990.

NUREG/CR-4012, J. C. Van Kuiken et al., *Replacement Energy Costs for Nuclear Electricity- Generating Units in the United States:* 1987-1991, Vol. 2, prepared by Argonne National Laboratory for the U.S. Nuclear Regulatory Commission, Washington, D.C., 1986.

NUREG/CR-4555, R. Clark et al., *Generic Cost Estimates for the Disposal of Radioactive Wastes,* Rev. 1, prepared by Science and Engineering Associates, Inc., for the U.S. Nuclear Regulatory Commission, Washington, D.C., September 1988.

NUREG/CR-4627, E. Claiborne et al., *Generic Cost Estimates: Abstracts from Generic Studies for Use in Preparing Regulatory Impact Analyses,* Rev. 1, prepared by Science and Engineering Associates, Inc., for the U.S. Nuclear Regulatory Commission, Washington, D.C., December 1988.

NUREG/CR-4731, V. N. Shah and P. E. MacDonald, *Residual Life Assessment of Major Light Water Reactor Components: Overview,* prepared by Idaho National Engineering Laboratory for the U.S. Nuclear Regulatory Commission, Washington, D.C., June 1987.

NUREG/CR-4921, H. M. Smith and E. J. Ziegler, *Engineering and Quality Assurance Cost Factors Associated with Nuclear Plant Modification,* U.S. Nuclear Regulatory Commission, Washington, D.C., April 1987.

NUREG/CR-5035, S. K. Beal et al., *Database of System-Average Dose Rates at Nuclear Power Plants,* prepared by Science and Engineering Associates, Inc., for the U.S. Nuclear Regulatory Commission, Washington, D.C., October 1987.

NUREG/CR-5236, F. W. Sciacca et al., *Radiation-Related Impacts for Physical Modifications at Nuclear Power Plants,* prepared by Science and Engineering Associates, Inc., for the U.S. Nuclear Regulatory Commission, Washington, D.C., October 1989.

NUREG/CR-5248, I. Levy et al., *Prioritization of TIRGALEX- Recommended Components for Further Aging Research,* prepared by Battelle Pacific Northwest Laboratories for the U.S. Nuclear Regulatory Commission, October 1988.

NYPA (New York Power Authority), 1989 *Outage ALARA Report*, NYPA (Indian Point 3), 1989

Rippon, S., "The Dampierre-1 Steam Generator Replacement," *Nuclear News,* p. 84, September 1990.

SAND88-7095, Forest, L. R. Jr. et al., *Cost Savings from Extended Life Nuclear Plants,* September 1988.

Sciacca, F. W., Science and Engineering Associates, Inc., letter to D. Cleary, U.S. Nuclear Regulatory Commission, "Transmittal of Discussion of Direct Consequences for Inclusion in Draft License Renewal Regulatory Analysis," January 25, 1990.

Sciacca, F. W., Science and Engineering Associates, Inc., letter to D. Cleary, U.S. Nuclear Regulatory Commission, "Transmittal of Appendix D of Draft License Renewal Regulatory Analysis," February 20, 1990.

Sciacca, F. W., Science and Engineering Associates, Inc., letter to D. Cleary, U.S. Nuclear Regulatory Commission, "Letter Report Presenting Base Case and Typical License Renewal Program Impact Driver Summaries," January 3, 1993.

Sciacca, F. W., Science and Engineering Associates, Inc., letter to D. Cleary, U.S. Nuclear Regulatory Commission, "Bases and Assumptions Used in Developing Updated Base Case and Typical License Renewal Program Scenarios," January 13, 1993.

Sciacca, F. W., et al., Science and Engineering Associates, Inc., *Cost Analysis of Alternative LWR License Renewal Regulations,* Report SEA 87-288-09-A:1, U.S. Nuclear Regulatory Commission, March 1989.

Sciacca, F. W., et al., *Impact Driver Definition for Nuclear Plant License Renewal Generic Environmental Impact Study,* Report SEA 89-461-09-A:1, U.S. Nuclear Regulatory Commission, August 1990.

"Steam Generator Replacement at Dampierre 1, France,"

Nuclear Plant Journal, pp. 93-95, May/June 1990.

Zachary, J., et al., "ALARA at the Peach Bottom-3 Pipe Replacement Project," *Nuclear News*, pp. 34- 37, September 1989.

Appendix B -- Attachment 1: Recent Industry Experience for Major Refurbishments and Estimates for Plant Life Extension Costs

[**Prev** | **Next** | **Top of file**]

A literature search for plant life extension and license renewal related cost information was conducted in support of the draft Generic Environmental Impact Statement published for comment in August 1991. That literature search focused on obtaining industry-derived data on inspection, surveillance, test, and maintenance (ISTM) actions and on major repair, replacement, or refurbishment actions undertaken in the past or planned in support of license renewal and plant life extension (PLEX) activities. The information collected is discussed in this attachment. Since the search was performed in 1991, all information cited dates from 1991 or earlier. The cost information has not been updated to 1994 dollars.

For each activity of interest to this evaluation (e.g., reactor pressure vessel replacement, steam generator replacement), information such as capital cost, labor, radiation exposure incurred, radioactive waste type and volume generated, and outage duration was obtained, if available. This search resulted in the identification of numerous references; however, most did not provide the needed detail on the aforementioned items. Many of the references presented overall PLEX cost in dollars per kilowatt but did not provide a breakdown of individual activities. It is important to note that most references recognized that the PLEX costs will vary significantly depending upon the reactor type and the vintage.

The following sections present information organized by specific component or topic. Following these sections is a list of references reviewed.

STEAM GENERATORS

Although several utilities have replaced their steam generators, the majority are searching for ways to extend the life of their operating steam generators, such as heat treating and sleeving to avoid the cost of replacement. In "Steam Generator Replacement at Dampierre 1, France," *Nuclear Plant Journal* May/June 1990, it is reported that a steam generator replacement at Dampierre 1, France, had a cost estimate of $106 million, including $3.5 million for three steam generators. Additionally, Rippon 1990 reported the steam generator replacement took 200,000 work hours and resulted in an exposure of 220 person-rem.

In Eckert (1987), the replacement of steam generators in a two-loop plant was estimated by Kraftwerk Union to require 2.5 months using 140,000 work hours and result in a total dose of 700 person-rem. Additionally, the planning of the steam generator replacement took 45,000 work hours.

Item	Palisades	Turkey Point	Surry
Direct cost (million dollars)	75	102	81
Replacement power cost (million dollars)	200	124	--
Total (million dollars)	275	226	--
Outage time	2 yrs	207 days	8.5 mos

In SAND88-7095, the replacement of steam generators is assigned a probability. This probability will be zero if the component has been replaced, or low if the component is of current design. However, older plants will have a high probability of replacement. The cost of steam generator replacement has been estimated at $20 million (1986 dollars) multiplied by the number of loops multiplied by the probability of replacement. EPRI NP-2418 provides the following information on steam generator replacement or partial steam generator replacement at three plants.

For Turkey Point and Surry, the operation involved a partial replacement of the steam generators.

In EPRI NP-4208, the following table outlines steam generator replacement cost, outage time, and the collective dose.

In NYPA 1989, information was presented on worker exposure in person-rem for the steam generator replacement at Indian Point 3. For an outage which included refueling and maintenance and steam generator replacement, the total dose was 852 person-rem. Of the 852 person- rem, 541 person-rem were attributed to the steam generator replacement.

Plant	Rating [MW(e)]	Replacement year	Outage (months)	Cost (million dollars)	Collective dose (person-rem)
Surry 2	775	1979-80	10	80	2140
Surry 1	775	1980	---	---	1760
Turkey Point 3	666	1981-82	10		2150
Turkey Point 4	666	1982-83	7	190[a]	1305
Point Beach 1	497	1983-84	6	50	590
Robinson 2	665	1984-85	8	85	1207

[a] For both Turkey Point 3 and 4.

Figure B-1.1 presents a comparison of seven steam generator replacement projects with respect to outage duration and personnel exposure. It was presented in Morency and McGough 1989.

Figure B-1.1. Outage duration and personnel exposure in seven steam generator replacement projects.

Katz (1988) indicates that for steam generator replacement in a two-loop plant, the exposure in person-rem and the labor in work hours are estimated to be 1,387 and 624,000, respectively. The estimated cost for on-site storage of the steam generator is $735,000.

The cost to immediately cut up and ship the steam generator is estimated to be $20,980,000.

The following table provides information on steam generator size, weight, and storage volumes.

Plant	Length (ft)	Diameter min/max (ft)	Nozzle size (in)	Dry weight (tons)	Total storage volume (ft^3)	Portion of storage allotment[a] (%)
Plant A (4 loop)	46	10/12	29	209	37,340	56
Plant B (2 loop)	63	10.6/13/6	31	305	31,653	48
Plant C (3 loop)	63	10.6/13/6	31	305	47,470	67
Plant D (3 loop)	67.6	11.3/14/6	31	331	57,864	82

[a] The portion of storage allotment refers to allocations for the disposal of low-level radioactive wastes at existing U.S. civilian disposal sites.

Note: To convert ft to m, multiply by 0.305.
To convert in. to cm, multiply by 2.54.
To convert ft^3 to m^3, multiply by 0.03.

BWR RECIRCULATION PIPE REPLACEMENT

Eckert (1987) has estimated that the exchange of two recirculation loops and six risers will require 2.5 months, 50,000 work hours for the preplanning, and 220,000- 380,000 work hours to execute the activities (including training) and will result in 500- 800 person-rem of total dose.

In Zachary et al. (September 1989), the radiation exposure for BWR major pipe replacement was reported for Peach Bottom 2 and 3 and compared with other plants.

In SAND88-7095, the replacement of piping is assigned a probability. This probability will be zero if the component has been replaced, or low if the component is of current design.

Radiation exposure incurred for boiling-water major pipe replacement (person- rem)	
Peach Bottom 2	2200
Peach Bottom 3	1074
PL-A	1900
PL-B	1785
PL-C	1785
PL-D	1638
PL-E	1580

Note: To convert person-rem to person-sievert, multiply by .01.

However, older plants will have a high probability of replacement. The cost of boiling-water reactor (BWR) piping replacement costs were estimated to be $75 million multiplied by the probability of replacement. BWRs with Mark I designs probably will be more problematic to refurbish than those with Mark II or Mark III designs. A rough estimate is that refurbishment of the Mark I design will cost $25 million more than refurbishment of the Mark II or Mark III.

In EPRI NP-4208, the following table is presented which outlines BWR piping estimated replacement cost and outage time.

The costs and downtime that have been reported for BWR recirculation pipe replacements range from $19 million to $65 million and from 6 to 10 months, respectively.

According to McBrien (April 1987), during a 9-month refueling outage in 1986 at Vermont Yankee, the entire recirculation piping and part of the plant's residual heat removal system were replaced at a cost of approximately $60 million dollars. Workers at the plant acquired a total exposure of 1786 person-rem.

Plant	**Rating [MW(e)]**	**Estimated costs (million dollars)**	**Estimated outage (months)**
Browns Ferry	1067	42 (budget)	6
Dresden 3	794	40 (budget)	9-10
Hatch 2	806	--	6
Monticello	536	19 (budget)	6
Nine Mile Point 1	610	65	10
Pilgrim 1	670	40 (budget)	9-10

PRESSURE VESSEL COSTS AND THERMAL ANNEALING

In EPRI-4208, it is reported that a dry anneal at 850?F for 168 hours will restore most fracture toughness properties lost during irradiation embrittlement. However, this indicates that the vessel internals must be removed and a heating system installed. However, there are problems related to post-anneal behavior that need to be resolved. These include the following.

- Re-irradiation rates of embrittlement as a function of impurity and alloying element concentrations need to be better established to determine probable time effectiveness of annealing during re-irradiation.
- The vessel needs to be requalified in accordance with applicable codes and standards, including nondestructive examination of the vessel after annealing.

In EPRI NP-2418, the following reactor pressure vessel replacement information is presented. The total cost is in 1979 dollars and excludes the cost of money and replacement power. The total time of replacement is approximately 5 months.

Reactor pressure vessel replacement costs (million dollars)

Direct costs	
Material	34
Labor ($25-35/h)	17
Indirect Costs	
Occupational exposure	13
Project supervisors	17
Consultants, management ($40 h)	
Subtotal	81
Contingency (50%)	41
Total	122

In EPRI NP-4208, reactor pressure vessel replacement has been estimated to cost $100 million to $150 million (1979 dollars) and to require 2-3 years.

Abbot et al. (1988) report a cost of $20 million to $50 million for three potential tasks as outlined:

- modified/radical fuel assemblies to reduce vessel fluence,
- lower internals replacement, and
- thermal annealing of vessel.

In Lott and Mager (1984), the estimated costs for a severely embrittled reactor vessel and a moderately embrittled vessel are presented. In some circumstances it may be advantageous to anneal the vessel earlier in plant life to accrue the benefits of annealing immediately. A severely embrittled vessel is one in which the embrittlement surpasses reasonably acceptable limits. For the severely embrittled reactor vessel, if the vessel can be annealed for less than $200 million then the cost of annealing is less than the savings associated with deferring the construction of a replacement plant by 1 year. This assessment is based upon a modest replacement cost of $2 billion for the power station and an annual cost of capital of $200 million, based upon financing rates of 10 percent. The moderately embrittled vessel is one for which embrittlement is projected to exceed acceptable limits before the end of the useful life of the reactor. There is a clear savings from deferring the large costs associated with the annealing. However, if the annealing can be used to increase the plant availability, then there is a clear benefit to annealing. An analysis conducted indicates that an increase in total plant availability of 1 day is approximately equivalent to $500,000. To make performing an early anneal financially advantageous, the annual cost benefit from annealing should exceed the financing costs associated with the anneal. Assuming an interest rate of 10 percent, the plant availability would have to increase by 2 days per year to justify a $10 million expense on annealing.

NUPLEX CAPITAL COSTS AND REPLACEMENT POWER COSTS

In SAND88-7095, a range of $250- $500/kW (1986 dollars) for nuclear plant- life extension (NUPLEX) refurbishment on an overnight basis ($300-$600/kW including financing) is reported. The overnight costs for Surry Unit 1 pressurized -water reactor have been estimated at $250/kW and for the Monticello BWR the costs have been estimated at $500/kW. More recent information presented in Moore (1990), indicates that the Monticello overall cost for extending operation is estimated to be $200/kW. That same source cites $150/kW as the capital cost for the Yankee Rowe plant for running a 20-year renewal term. Westinghouse has estimated the cost of NUPLEX refurbishment as ranging from $240/kW to $900-$1000/kW based upon the amount of refurbishment needed. The higher estimate is a result of replacement of most major components and annealing of the pressure vessel.

McCutchen et al. (1988) reports a life extension program cost of $270/kW or $318 million.

Massie et al. (1985) assumed in their calculations a typical Westinghouse three-loop plant rated at 775 MW(e), with a mid-life in year 1992, and replacement power costs of $350,000/day in 1985 dollars.

BIBLIOGRAPHY FOR APPENDIX B ATTACHMENT 1

Braun, C., "Economic Factors Related to Life Extension of Nuclear and Coal-Fired Plants," *Transactions of the American Nuclear Society,* 46, 558-59 (June 1984).

Byron, J., and M. Lapides, "Guidelines for the Life Extension of Nuclear Power Plants," Draft EPRI Document, July 1988.

"Interim Draft for Generic Environmental Impact Statement for License Renewal of Nuclear Power Plants," Prepared for U.S. Nuclear Regulatory Commission, October 15, 1990.

Katz, L. R., "The Codes and Standards Aspects of Nuclear Plant Life Extension," pp. 131-38 in *Proceedings of the ASME Pressure Vessel and Piping Conference,* Pittsburgh, June 19-23, 1988.

Lapides, M. E., "Making Decisions on Plant Life Extension," *Nuclear Engineering International (UK),* 34, 26-27 (August 1989). Moylan, M. F., et al., "Reactor Vessel Life Extension," in *Proceedings of the ASME Pressure Vessel and Piping Conference,* San Diego, June 28- July 2, 1987.

Stancavage, P. P., "BWR Life Extension Economics," pp. 309-315 in *Proceedings of the 1986 Joint ASME/ANS Nuclear Power Conference: Safe and Reliable Nuclear Power Plants,* Philadelphia. Tipping, P., et al., "Study of the Mechanical Property Changes of Irradiation Embrittled Pressure Vessel Steels and Their Response to Annealing Treatments," in *Transactions of the 9th International Conference on Structural Mechanics in Reactor Technology, Vol. G, Fracture Mechanics and NDE,* pp. 115-27, Lausanne, Switzerland, August 1987.

Appendix C: Socioeconomics

[**Prev** | **Next** | **Top of file**]

C.1 Research Methods

[**Prev** | **Next** | **Top of file**]

The social impact assessment methods employed in this project were designed to identify the significance level of potential socioeconomic impacts during refurbishment and the license renewal term and to identify relationships between key social factors (impact predictors) and the intensity of impacts. The research methods used consisted of a literature review, a search of newspaper citations, a survey of all nuclear utilities, and seven detailed case studies.

The impact categories examined were limited primarily to those socioeconomic effects associated with project-induced employment (direct and indirect), population growth, expenditures, and tax payments. This approach is traditionally

followed in preparing environmental impact statements (EISs) involving the construction and operation of nuclear power plants. The key socioeconomic topics suggested for in-depth examination by the literature search and citation review were (1) population, (2) housing, (3) taxes, (4) public services, (5) off-site land use, (6) economic structure, and (7) historic and aesthetic resources.

The following sections provide additional detail on the literature review, the review of newspaper citations, the utility survey, the seven case studies, and the techniques used to analyze the past and projected impacts associated with nuclear power plants. C.1.1 Literature Review

The purpose of the literature review was to identify important socioeconomic issues, to obtain an industry-wide summary of the impacts that had occurred in those subject areas as a result of past nuclear plant construction and operations, and to identify possible causal factors related to those impacts. The literature review focused largely on EISs prepared for nuclear power plants at the time of their application for an operating license [Atomic Energy Commission (AEC) and U.S. Nuclear Regulatory Commission (NUREG) final environmental statements]. In addition to projecting the future impacts of plant operation, many of these documents summarize the impacts that occurred during plant construction. Along with these EISs, several detailed retrospective studies of impacts that had occurred at specific nuclear power plants were examined. Section C.2.1 provides a detailed discussion of the literature review.

C.1.2 Review of Newspaper Citations

Citations from five major metropolitan newspapers and a national wire service were examined to check the completeness of the socioeconomic impact categories suggested through the literature review. The newspapers were the Atlanta Constitution, the Houston Post, the Los Angeles Times, the New York Times, and the Washington (D.C.) Post. The wire service was United Press International. The search spanned 1989 and the first 5 months of 1990. Potentially relevant articles were identified through a computer database search, using the key words "nuclear power" and "nuclear power plant" in conjunction with a number of other words and phrases including "public reaction," "public concern," and "public opinion." Over 400 articles were identified through this search, although upon review, many were found to be irrelevant for this study. Overall, the traditional socioeconomic impact areas described have received little recent attention in the print media.

C.1.3 Survey of Utilities

Two written surveys of the nation's nuclear utilities were conducted. The survey instruments were designed by Oak Ridge National Laboratory (ORNL), with substantial input from the Nuclear Regulatory Commission (NRC) and the Nuclear Management and Resources Council (NUMARC). Both were administered by NUMARC.

The first survey instrument, sent to all U.S. nuclear utilities, was designed to elicit important descriptive information on plant operations. The respondents provided an industry-wide picture of current and past numbers of plant workers and of nuclear plant financial contributions to host communities. Usable data were received for some portion of these questions for 66 of the 74 nuclear plant sites nationwide.

The second survey instrument was sent to the utilities that operate the seven socioeconomic case study plants, and responses were received from all seven utilities. The purpose of these items was to gather detailed information on worker residential location, plant expenditures, and tax payments to local communities so that the causal factors related to past impacts could be identified and future impacts could be predicted.

C.1.4 Case Studies

The seven nuclear plants were chosen for detailed study as representative of all U.S. nuclear plants in terms of the socioeconomic characteristics of their host communities. The site-selection methodology and the plants chosen are described below. The case study examination was designed to provide detailed information on past impacts at a sample of nuclear power plants that represent the range of plants nationwide and to allow the projection of future impacts in key issue areas.

Detailed information was obtained on the seven case study sites through a review of EISs and site-specific NUREG reports, as well as through telephone interviews conducted with state and local officials and other expert sources. The sources were chosen for their expertise in the socioeconomic issue areas addressed (e.g., housing, land use) and included employees of local planning agencies, chambers of commerce, and economic development agencies; local tax assessors and treasurers; officials at state employment offices; and local media personnel. Nearly 300 telephone interviews were conducted at the seven case study sites. A detailed telephone protocol was used to collect data at the five sites previously studied by Mountain West Research, InC. (NUREG/CR-2749, vols. 1, 4, 5, 7, 12), in a postlicensing study conducted for the NRC. A more exhaustive protocol was used for the two case study sites that had not been studied previously by Mountain West and for which more information was needed. Section C.7 contains the questions asked in these interview protocols.

The seven case study sites chosen represent roughly 10 percent of the U.S. nuclear power plant sites. The primary factor considered when selecting sites for socioeconomic study was the population of the area surrounding the plant. Population was chosen as the primary factor because the literature reviewed and other previous experience suggested a strong relationship between an area's remoteness and the magnitude of impacts related to population growth, employment, expenditures, and taxes. Plant age and location were also considered so that the sample includes sites representing various licensing dates, population characteristics, and geographic sections of the United States.

In considering plants for this study, preference was given to those sites for which detailed historical data about socioeconomic impacts were available. Thus, 12 plants studied by Mountain West Research, InC. (NUREG/CR-2749), and 2 plants studied by the Electric Power Research Institute (EPRI) were considered first: Arkansas Nuclear One (ANO), Bellefonte, Calvert Cliffs, D. C. Cook, Crystal River, Diablo Canyon, Nine Mile Point, Oconee, Peach Bottom, Rancho Seco, St. Lucie, San Onofre, Surry, and Three Mile Island (TMI).

Each of these plants was classified according to the remoteness of its location, based on a classification scheme developed by Battelle Human Affairs Research Centers for Sandia National Laboratories (NUREG/CR-2239). Site remoteness involves population density in the area near the plant and the plant's distance from large cities. Battelle combined both these factors to measure "sparseness" and "proximity." Sparseness measures population density and city size within 32 km (20 miles) of the site, whereas proximity focuses on density and city size within 80 km (50 miles). Each measure involves four categories. Although Battelle expressed these categories in terms of numbers of people within 32- and 80-km (20- and 50-mile) radii, the absolute numbers were converted to the number of persons per square kilometer so that 1986 census data could be used for comparison and site selection. The sparseness and proximity measures used to classify potential case study sites are shown in Table C.1.

Three population classifications take into account the combination of the four-point sparseness and proximity scales. The three population classes are low, medium, and high population. Low corresponds to the most sparse population category and sites not in close proximity to large cities, whereas high corresponds to the least sparse population category and sites that are in close proximity to large cities. The bounds of each population classification are shown in Figure C.1.

Because only 1 of the 14 previously studied plants listed earlier fell into the low population category, 4 additional low-population sites were considered for inclusion in this study: Big Rock Point, Cooper, Wolf Creek, and Hatch. The Indian Point site also was added because it is located in an area with high population density and in close proximity to New York City. The applicable population classification for each of the 19 potential case study sites is shown in Table C.2.

The seven case study sites selected from those listed above were chosen to represent a broad range of population remoteness, geographic location, and plant age. The major characteristics of the plants chosen are shown in Table C.3. Their geographic distribution is illustrated in Figure C.2. All the sample plants have pressurized water reactors (PWRs), which in the bounding case scenario will require 84 percent more workers for refurbishment than will boiling water reactors (BWRs). The main analysis of potential socioeconomic impacts is based on this bounding case scenario. In the

typical case scenario, the work force required to refurbish BWRs is projected to be 72 percent larger than that required for PWRs. (See Section 3.3.1.1 for details about work force projections.)

Figure C.1 Population categories, by sparseness and proximity.

Figure C.2 The seven case study nuclear plants.

C.1.5 Analysis of Impacts

C.1.5.1 Defining Significance Levels for Each Impact Category

For each socioeconomic topic, the characteristics of small, moderate, and large levels of impact were defined. These definitions were developed on the basis of Council on Environmental Quality regulations (40 CFR Part 1500), information from site-specific nuclear EISs and NUREG studies, interviews with local information sources, studies concerning nity response to nuclear and non-nuclear technologies, and best professional judgment. The definitions of significance for each socioeconomic topic are presented in Sections 3.7.2 through 3.7.7 and Sections 4.7.2 through 4.7.7.

C.1.5.2 Characterizing Past Impact Levels and Identifying Impact Predictors

Descriptions of past impacts in all socioeconomic issue areas were gathered through the data-collection methods described in Sections C.1.1 through C.1.4. These impacts then were characterized as small, moderate, or large on a site-specific basis, using the significance level definitions discussed in Chapters 3 and 4. A description of past impacts for each of the case study sites is presented in Sections C.4.1 through C.4.7. From these site-specific characterizations of the representative case study plants, generalizations were made concerning the range of past impacts for all nuclear plants nationwide.

In examining the impacts identified in available reports and EISs and through the detailed case studies, it is apparent that the extent to which socioeconomic impacts are experienced at a given project site would depend on several factors. These factors, which will be referred to as impact "predictors," consist of characteristics of the project (called "drivers" in Appendix B) as well as characteristics of the area in which a plant is located. The specific predictors identified include local population characteristics; the employment, expenditures, and tax revenues generated by the project; and the existing infrastructure of the project's host community or communities. By looking at impact predictors and the resulting impacts that occurred at many different sites during plant construction and operations, the relationships between predictor magnitude and impact significance were identified. These relationships are discussed in Sections 3.7.2.3 through 3.7.7.3 and in Sections 4.7.2.3 through 4.7.7.3.

C.1.5.3 Projecting Future Impacts

The first step in projecting impacts was to obtain projections of the number of direct workers required for refurbishment-related activities and for operations during the license renewal term. Projections of the refurbishment work force were prepared by Science and Engineering Associates, InC. (SEA 1994); they are presented in Chapter 2 and in greater detail in Appendix B, and are discussed in Section C.3.1.1. The number of refueling and maintenance workers employed at a typical plant during past outages was obtained from the survey of all U.S. nuclear utilities (Section C.1.3) and verified by SEA. SEA used information from the survey and the literature regarding the number of person-months required for normal refueling outages to develop an estimate of the number of refueling workers likely to be on-site during current-term and final refurbishment outages. The number of operations workers currently employed at each case study plant was obtained from the survey of all U.S. nuclear utilities, whereas the number of additional permanent workers required for plant operation during the license renewal term came from descriptions of proposed inspection, surveillance, testing, maintenance (ISTM) tasks (Section C.3.1.2). Additional detail about work forces required during refurbishment outages and the license renewal term are provided in Sections C.3.1.1 and C.3.1.2, respectively.

To project the maximum impacts likely to result from a plant's license renewal refurbishment activities, the staff based its socioeconomic impact analysis on the bounding case work forces projected by SEA (1994). The conservative nature of the bounding case scenario is described in Appendix B. Because the bounding case work force estimate for PWRs (2273 workers at peak) is larger than the estimate for BWRs (1482 workers), the staff conducted its primary analysis of potential socioeconomic impacts using the projected PWR work force. This analysis has identified some issues for which moderate or large adverse impacts are possible. For these issues, the potential for less severe impacts associated with the bounding case work force at BWR sites has been considered. For these issues, an analysis of the potential impacts at BWR sites is provided and is based on the 1500-person work force associated with the bounding case BWR refurbishment scenario. For those issues where moderate or large adverse impacts were determined to be possible with 1500 workers, an analysis of the typical case refurbishment work force (1017 workers at BWR sites) has been conducted. Those issues for which moderate or large adverse impacts were found to be possible with a work force smaller than 1017 (i.e., operations-period refueling work forces) have not been subjected to these additional analysis.

Using the work force projections, the staff determined the number of indirect jobs that would be created as a result of refurbishment and license renewal. Indirect employment was projected using the Regional Industrial Multiplier System (RIMS) direct/indirect job ratios calculated for each plant in the NUREG/CR-2749 study. Using the employment projections for direct and indirect workers, projected changes in local population were calculated based on patterns of worker residential location, in-migration, and family size identified in the site-specific NUREG reports. Patterns for refurbishment and refueling/maintenance workers were assumed to follow those established by plant construction workers, and patterns for additional permanent license renewal term workers were assumed to follow those established by current term plant staff (Section C.4.1.1). Population changes caused by temporary refueling and maintenance workers involved in periodic plant outages during the license renewal term were not studied in detail because these workers would be employed for very short periods of time, but evidence about past effects during such outages was collected and considered in the analysis.

The projections of direct and indirect employment associated with refurbishment and routine (nonoutage) operations were used to assess the economic impacts of refurbishment and license renewal. Economic impacts were projected by comparing estimated plant-related employment (direct and indirect) with projections by the National Planning Association (NPA) of total employment for the study areas during the refurbishment period and the license renewal term (Section C.4.1.6). For the refurbishment period, employment estimates for all refurbishment-related workers (including refueling/maintenance workers) were used. For the operations period, estimates of all permanent (nonoutage) workers were used; this includes additional jobs and those continuing from past operations.

Because many socioeconomic impacts are driven by population growth, the next step in projecting the impacts of refurbishment and license renewal was to use the population growth projected for each case study area in assessing impacts to housing, public services, and off-site land use. For each of these topic areas, impact predictions were made by comparing levels of impact significance associated with past plant-related population growth to projected population growth and by examining projected conditions of key infrastructure components. The analysis assumes that no other major construction project will occur concurrently with plant refurbishment and subsequent refueling and maintenance activities. If other large construction projects are ongoing when these activities occur, impacts could be greater than those predicted. Housing impacts were projected for refurbishment and continued operations, respectively, by comparing the housing demand expected to result from the in-migration of refurbishment-related workers and of additional permanent operations workers with projections concerning local housing markets (number of units and vacancies) generated from U.S. Census data (Section C.4.1.2). In addition, evidence concerning past impacts associated with the influx of refueling and maintenance workers during plant outages was gathered and used as an indicator of possible outage-related impacts during the license renewal term at the one site where significant growth-induced housing impacts were predicted for the refurbishment period. Public service impacts were projected by comparing the number of refurbishment-related workers and additional permanent operations workers expected to in-migrate with the local communities' projected capacity to provide public services, as indicated by local information sources (Section C.4.1.4). As with housing, evidence was gathered at one site concerning outage-induced transportation impacts. For off-site land use, impacts were projected by examining the size of anticipated population growth resulting from

refurbishment-related workers and additional permanent operations workers relative to state data center projections of a study area's total population. Potential changes in land-use patterns caused by plant tax payments were also considered in projecting the impacts of license renewal (Section C.4.1.5).

Unlike the subjects already discussed, impacts to taxes and to historic resources and aesthetic resources are not driven primarily by changes in employment and population. For these three topics, impacts examined for the refurbishment period are those that result solely from changes induced by refurbishment-related activities (i.e., increased tax assessments and modified plant structure). In contrast, the assessment of license renewal term impacts includes continuing impacts from past operations and the new impacts already discussed. A detailed discussion of the methods used to predict impacts in each of these subject areas is presented in Sections C.4.1.3 and C.4.1.7, respectively.

Socioeconomic impacts identified and analyzed here are site-specific; they have no statewide or nationwide consequence. Therefore, simultaneous relicensing of several nuclear power plants will not result in cumulative regional or national impacts.

Judgments on whether or not potential environmental impacts in each subject area would need to be further addressed in each individual license renewal application were made based on the nature of the projected impact and its level of significance. These conclusions are not discussed in Appendix C but are presented in the body of the Generic Environmental Impact Statement (GEIS). Because of uncertainty surrounding the number of workers that would actually be required for plant refurbishment, a sensitivity analysis was performed wherein socioeconomic impacts were predicted in response to a work force roughly 50 percent larger than the estimated peak work force for the major refurbishment outage provided in Section C.3.1.1 (even though the estimate given in that section was designed to be an upper bound for a typical plant). The discussion of conclusions for each socioeconomic topic in the body of the GEIS states whether or not the conclusion category (1 or 2) expected for the preferred estimate would change in response to the larger work force.

Sections C.4.1 through C.4.7 present a detailed discussion of projected socioeconomic impacts in each of the above subject areas for each case study site, and Sections 3.7.2 through 3.7.7 and Sections 4.7.2 through 4.7.7 summarize these impacts and project impacts for all nuclear plant sites based on the case study predictions. These nationwide predictions are considered valid because the impacts predicted at the case study sites represent the range of potential impacts at existing nuclear plants. Population, which is considered an impact predictor rather than an actual impact, is discussed in Sections C.4.1.1 through C.4.7.1, 3.7.1, and 4.7.1.

C.2 Baseline Description

[**Prev** | **Next** | **Top of file**]

C.2.1 Overview of Past Population- and Tax-Driven Nuclear Plant Impacts

C.2.1.1 Objectives

This literature review summarizes the results of previous case studies that examined the socioeconomic impacts of nuclear power plants. The objective of the review was to identify

- kinds of impacts that have occurred (e.g., schools, government expenditures);
- causal factors behind those impacts (e.g., size of work force, extent of existing community infrastructure); and
- impact thresholds, if any (e.g., taxes from plant as a disproportionate share of local tax base, no city of a certain size within commuting distance of the plant).

Socioeconomic impacts occurring during either construction or operation are of interest. Construction impacts provide an upper bound to what might happen during a major plant refurbishment, whereas operations impacts typify what would occur after license renewal, allowing for adjustments for refurbishment-induced changes in work forces, taxes, or other impact drivers.

C.2.1.2 Literature Reviewed

Several categories of literature were reviewed. One major category is EISs for nuclear plant operating licenses (OLs) (Section C.5.3 lists the EISs reviewed). This category is potentially useful because the EISs not only consider impacts from plant operations but often summarize impacts that occurred during construction. They are official documents in support of the NRC's regulatory process and, presumably, carry a measure of credibility in respect to what the regulatory process requires in terms of data, findings, and content. The second category of literature includes case studies commissioned by organizations closely involved with the nuclear industry. The NRC has conducted several such plant-specific studies (NUREG/CR-2750, ORNL/NUREG/TM-22, and NUREG/CR-0916). EPRI also conducted a series of case studies of power plants, two of which were nuclear (EPRI/EA-2228). The third category of literature encompasses studies of single nuclear plants that are usually sponsored by utilities as part of the regulatory process or by some other organization interested in documenting socioeconomic impacts.

C.2.1.3 Types of Impacts

This literature review reveals no population- or tax-driven socioeconomic impacts other than those typically assessed in environmental impact documents. Those documents written in support of the National Environmental Policy Act of 1969 (NEPA) process almost always focus on readily quantifiable impacts to public services, housing, the economy, and land use. Exceptions in which the assessment is qualitative include aesthetic and cultural resources impacts, which are almost always considered in EISs, and recreational impacts, which are discussed in 44 of the 78 (56 percent) OL EISs examined. Impacts to these resources, however, are seldom found to be population- or tax-driven. Consequently, they are defined by general statements about appearances of the plant, transmission lines (sometimes the lines are rerouted to avoid negative impact to residents in the vicinity), and compatibility with nearby cultural resources. Recreation impacts are generally defined as positive contributions such as visitor centers; boating, fishing, and hiking activities; and dedication of land on the plant site to natural resources conservation and education. Typically, non-NEPA documents do not examine these resources.

Among public service impacts identified, the assessments focus on schools, transportation, and public safety; less emphasis is placed on utilities, water and sewer facilities, and health and welfare services. These same impacts are covered in the other case studies examined in the literature, and there is a strong consensus that all should be treated as valid kinds of socioeconomic impacts under NEPA. Housing is another impact that understandably receives considerable emphasis in NEPA and non-NEPA assessments, with residential distribution being foremost in importance, followed by housing type and costs. Generally, housing impacts are treated before public service impacts because most services generally support people by place of residence.

Economic impacts are almost always assessed in environmental documents and related case studies. They are readily quantifiable and tangible impacts that are easy to understand. Minimally, the project work force total and annual payrolls are included (although early NRC EISs did not note these basic impacts). Emphasis normally is on totals of direct employment and payroll generated by the nuclear plant, indirect jobs in the local economy, amounts of money contributed to the regional economy, and tax contributions to the local tax base--particularly property and sales taxes. Additional types of taxes and amounts of revenue that flow to the state governments generally are not considered in NEPA documentation, although case study reports produced by NRC more adequately assess these latter impacts.

Land-use impacts created directly by the plant itself and its transmission lines are assessed in 78 percent of OL EISs. Generally, such impacts are considered in terms of acres disturbed, people relocated, and land flooded for cooling lakes. Only rarely is attention directed at what effect plant siting would have on broader community land use and associated growth. These generalizations hold true for the other literature categories reviewed, with the exception of the NRC's series of 12 case studies, which gives considerable attention to land use and associated community growth and finds that land-use changes related to plant siting and worker in-migration "strengthened overall patterns of change and development" (NUREG/CR-2750).

C.2.1.4 Causal Factors of Impacts

Most of the socioeconomic impacts created by nuclear plants are driven by the plant-related population or taxes. Nuclear power plants require large numbers of workers to construct and, to a lesser extent, operate, and they generally pay significant amounts of taxes. The amounts of jobs and taxes tend to correlate fairly directly with the size of the plant. In many communities where nuclear plants are located, the plant is very likely to be one of the largest, or even the largest, employer and contributor to the tax base. Therefore, its workers create impacts on schools, public services, housing, utilities, transportation, and health and welfare services. Of particular importance are in-migrating workers and their families, who must be accommodated by expansion of such services. If the communities are small and the plant site is located beyond commuting distance of a reasonably large population center, then worker in-migration would be higher and resulting demands of services would be increased--perhaps to the point that major expansion is required.

Taxes from the plant and its workers provide a major benefit to local communities in helping to pay for public services. Once built, a nuclear plant typically contributes millions of dollars annually to the local tax base. The range may be as low as $1 or 2 million and as high as $42 million (1990 dollars), depending upon the assessed plant value and tax structure, according to the 69 percent of OL EISs that discuss the issue. An even broader range of tax payments was reported by utility respondents to a recent questionnaire (Section C.2.2). Although the effects of plant tax payments are primarily positive, potentially negative tax-related issues can involve (1) the timing of tax revenues that may be too late to pay for construction-period impacts caused by in-migrating workers; (2) discontinuities between jurisdictions that can tax the plant and jurisdictions in which many of the employees reside; and (3) the disproportionately large amount of the tax base represented by the power plant, which can pose a major problem in the future for local real estate tax revenues. A fourth issue is how to pay for public services in the case of nuclear plants owned by the government that pay no local property taxes and only small payments in lieu of taxes. As in the case of population impacts, tax-related impacts have the potential for being much larger in rural areas with small tax bases.

C.2.1.5 Impact Thresholds

In developing a license renewal rule, the emphasis is on identifying socioeconomic impacts that could be particularly problematic for local communities and the conditions under which these could occur. For example, is the labor requirement so large and the community so remote from a population center that in-migration to the plant's area would be large enough to significantly stress the public infrastructure? Or, in regard to taxes, is the assessed value of the plant so large relative to the existing tax base that local governments would be highly dependent on plant-related revenues? An impact threshold can be thought of as the set of conditions (e.g., a particular number of plant-related workers in conjunction with a host community's population and distance from major urban areas) under which significant impacts can be expected.

Before addressing the issue of thresholds, it is useful to generalize very briefly about the severity of these kinds of impacts that could result from nuclear plants. The literature that specifically deals with the issue (NUREG/CR-2750; NUREG/CR-0916) notes that nuclear plants seldom, if ever, create massive (boomtown-level) impacts to community infrastructure on the scale of mine-mouth coal plants or hydroelectric dams because nuclear plants are not sited in remote western regions of the country where such severe impacts can occur. This finding is supported by the OL EISs, which fail to identify any potential or actual case of a boomtown-level impact from a nuclear plant. Indeed, the overall findings from the literature reviewed argue strongly for the proposition that population- and tax-driven impacts of nuclear plants during the construction period overwhelmingly are small to noticeable for affected communities and well below boomtown proportions. Significant negative impacts have occurred, however, at a few plant sites. During plant operation, employment and tax revenues can be a substantial benefit for local communities, and their loss would be equally significant. Of particular concern would be cases in which nuclear plants make up a large percentage of the tax base.

In regard to the identification of impact thresholds during plant refurbishment and continued operations, the literature alone does not give any clear answers. However, in conjunction with the case studies detailed in Section C.4, a number

of impact predictors were identified that can be used to indicate whether significant impacts are likely to occur at a given site in several socioeconomic subject areas. These impact predictors are discussed in Sections 3.7 and 4.7.

C.2.2 Overview of Current and Past Socioeconomic Characteristics for All Plants

This section summarizes information on selected socioeconomic characteristics for U.S. nuclear plants. Specific topics include the plants' operating period employment; characteristics of typical planned outages, in-service inspections (ISIs), and largest single outages; assessed value; and tax payments. The section is intended to provide an overview of the entire U.S. commercial nuclear industry. Information used to prepare this report was obtained through questionnaires mailed to all utilities that operate nuclear plants.

Considerable differences exist among nuclear plants in terms of the size of their operating work forces. Table C.4 provides a summary of data concerning current operating-period employment at nuclear plants grouped by the number of units at each plant. Although the employment figures are intended to represent the number of permanent personnel on-site, they might overstate that figure because it is likely that temporary workers were included in some utilities' responses. The incremental increase in the mean number of workers per unit is not linear, because the mean for one-unit plants constitutes over 66 percent of the mean for two-unit plants, whereas the mean for two-unit plants represents only 52 percent of the mean at three-unit plants. The number of units at each station represents those licensed by 1990; therefore, for some two- and three-unit plants, employment may have been considerably lower in past years depending upon the number of units that were actually on-line and their levels of operation. Table C.5 depicts changes in mean operating-period employment at the plants from 1975 to 1990.

U.S. nuclear plants also differ in the number of workers, the costs, and the length of time required per unit for various types of outages. Table C.6 depicts the minimum, maximum, and mean number of workers, costs, and time required per unit for a typical planned outage during which refueling and other routine tasks are performed. Table C.7 presents the same information for an ISI outage. The two tables should be read in columns, not rows, because the plant that had the minimum number of workers, for example, is not necessarily the same as the plant with the lowest cost or the shortest outage. The numbers presented in Tables C.6 and C.7 might be high because some utilities probably included permanent operations workers in their count of workers used during outages, even though they were asked to list only additional on-site workers. Also, the numbers count each worker who came on-site at some time during the outage, regardless of the duration of the stay. These numbers, therefore, are almost certainly higher than the peak number of workers on-site during a single day or week. The maximum number of 2600 is particularly suspect; the next highest number of workers given for a typical planned outage was 1500.

Table C.8 summarizes information on the largest single outage experienced for one unit at those nuclear plants providing data for this topiC. The tasks performed during these large outages vary but can include steam generator replacement, core support barrel repair, recirculation system piping replacement, and refueling. The table, which contains data on the number of additional workers, the total costs, and the time involved in the responding plants' largest outages, is designed to be read in columns. As with preceding tables, Table C.8 presents numbers that are higher than actual work force peaks because some utilities included operations workers in their count of additional workers and because the numbers count each worker who came on-site, regardless of the duration of the stay. In general, the amount by which these numbers overstate actual peaks can be expected to increase with the length of the outage.

Sizeable differences also exist among nuclear plants in terms of their assessed values. Table C.9 provides a summary of data concerning current assessed values at nuclear plants grouped by the number of units at each plant. The incremental increase in the mean assessed value per unit is not linear, because the mean for one-unit plants constitutes almost 66 percent of the mean for two-unit plants, whereas the mean for two-unit plants represents only 26 percent of the mean at three-unit plants. The number of units at each plant represents those licensed by 1990; therefore, for some two- and three-unit plants, assessed values may have been considerably lower in past years depending upon the number of units actually on-line. Table C.10 depicts changes in the minimum, maximum, and mean assessed values from 1980 to 1985.

The amount of local and state taxes paid on nuclear plants by the utilities that own them also varies considerably. Table C.11 depicts information about the local and state taxes paid on nuclear plants grouped by the number of units at each

plant. Once again, the incremental increase in the mean total amount of taxes paid is not linear, because the mean for one-unit plants constitutes over 65 percent of the mean for two-unit plants, whereas the mean for two-unit plants represents only 28 percent of the mean at three-unit plants. For some two- and three-unit plants, tax payments were probably lower in past years because one or more of the plants' units may not have been on-line. Table C.12 depicts changes in the minimum, maximum, and mean amounts of local and state taxes paid from 1980 to 1985. A relatively small number of utilities explicitly mentioned paying state taxes; however, where such taxes are paid, the mean payment is substantially greater than the mean for local taxes. Because a large number of utilities reported only total tax payments without specifying the jurisdictions to which the taxes are paid, it is possible that the utilities pay more state taxes than are indicated here.

C.3 Description of License Renewal

[**Prev** | **Next** | **Top of file**]

C.3.1 Work Force and Expenditures Required for Plant Refurbishment and the License Renewal Term

License renewal for a commercial nuclear power plant will involve two time periods: the refurbishment period and the license renewal term. The length of the refurbishment period, the number of additional workers who would be on-site to perform refurbishment tasks, and the costs of refurbishment would vary among nuclear plants. The license renewal term will be 20 years, but the number of additional personnel that will be required to operate a plant will vary. This section describes the estimates of refurbishment period length, costs, and work force sizes used in the GEIS to assess the socioeconomic impacts of license renewal. Section C.3.1.1 describes the estimates of refurbishment outage length, work force, and costs provided by SEA (Appendix B; SEA 1994). Section C.3.1.2 describes the estimates of the license renewal term work force.

C.3.1.1 The Refurbishment Period

For a nuclear power plant, the refurbishment period is expected to begin several years before a unit's original operating license expires. Plant refurbishment would probably involve bringing additional workers to the site to perform certain tasks during four regularly scheduled current term outages and one major refurbishment outage. GEIS predictions are based on a bounding case (conservative) refurbishment work force scenario prepared by SEA (1994). The scenario provides refurbishment work force estimates that are expected to represent the upper bound of work force requirements for a typical plant. The impact assessment performed for the GEIS is based on the projected work force required to refurbish a PWR because that represents the worst-case situation and because all the socioeconomic case study plants are equipped with PWRs. It is assumed that refurbishment activities for multiple units at a nuclear power plant would be performed sequentially, even where two units' licenses expire in the same year (Table 2.1), because the utilities are not expected to shut down more than one unit at a time. For a PWR, the peak number of 2273 refurbishment workers is expected to be reached during the major refurbishment outage (SEA 1994). For a BWR, the peak work force (1500 persons, including refurbishment and refueling workers) would be on-site during the current term outages (Chapter 2, Appendix B).

A second work force scenario--the typical case--has been developed by SEA (1994). In this scenario, the peak work force at PWRs (874 persons) will occur during current term outages, while the BWR peak work force (1017 persons) will occur during the final refurbishment outage.

Four current term outages per unit are expected, starting 8 to 10 years before the original operating license expires (Figure C.3). Each outage would last approximately 4 months in the bounding case scenario, and it is assumed that outages would be separated from each other by 18 months of normal operation. All the current term outages would consist of refurbishment activities conducted while the reactor is shut down for refueling and routine maintenance.

During current term outages, only the refurbishment workers required for license renewal can be expected to cause new impacts, because the refueling and maintenance workers' presence is related to continued operations under the original

license. However, normal plant staff and refueling and maintenance workers who are on-site during refurbishment can be expected to contribute to the overall magnitude of impacts.

One major outage is assumed in the year before the expiration of a unit's operating license, to allow performance of any remaining refurbishment tasks not completed during the previous four current term outages. This assumed refurbishment outage is expected to last 9 months and require, at its peak, approximately 2273 direct refurbishment workers at a PWR.1

C.3.1.2 The License Renewal Term

The license renewal term for a nuclear power plant would begin 10 years before the end of the initial 40-year license period (see Figure 2.3). The renewed operating license would allow 20 additional years of plant operation subsequent to the 40-year operating license. The license renewal term work force is expected to include those personnel on-site during the original operating period. In addition, it is expected that continued operations during the license renewal term could require some additional workers because of the requirement for more frequent surveillance and inspection (NUREG-1398). Past descriptions of proposed ISTM tasks indicate that these are likely to require between 20 and 60 additional workers per unit. To provide a realistic upper bound to potential population-driven impacts associated with continued plant operations, the high end of the projected range of ISTM workers (60 per unit) is used to approximate the number of additional permanent workers required for ongoing ISTM tasks during the license renewal term.2

Figure C.3 Conservative scenario refurbishment work force estimates (PWR).

As with the original operating period at all nuclear power plants, periodic refueling and maintenance would be performed during the license renewal term. In addition, each unit would undergo two 5-year ISIs and one 10-year ISI during the license renewal term. The conditions under which renewed operating licenses would be granted are expected to require more maintenance and ISI workers to perform these tasks than during the term of the original licenses. It is estimated that each of the 8 normal refueling outages that would occur during the license renewal term for both PWRs and BWRs would require approximately 30 more workers for refueling and maintenance than are currently required. In addition, it is estimated that each license renewal term refueling would cost approximately $1 million more than refueling during the original term. Further, it is projected that each of the two license renewal term 5-year ISI outages (1) would require approximately 30 more workers at a PWR and 70 more workers at a BWR and (2) would cost approximately $1.5 million more at a PWR and $3 million more at a BWR than 5-year ISIs during the original term. Finally, it is estimated that the one license renewal term 10-year ISI outage (1) would require about 50 more workers at a PWR and 110 more workers at a BWR and (2) would cost approximately $2.5 and $5 million more, respectively, than a 10-year ISI outage during current operations. The GEIS does not systematically assess the impacts associated with these periodic outage workers because such workers would not be permanent plant staff and their presence in the community is likely to be very short-lived. However, as noted earlier, evidence about past effects during such outages was collected and considered in the analysis.

C.3.2 Changes in Taxable Value of the Plant and in Tax Distributions Following Refurbishment

The taxable value of nuclear power plants is expected to increase early in the license renewal term because of improvements made during refurbishment. Subsequent depreciation is possible, although this depends on the basis of the assessed value and is likely to be gradual during the 20-year license renewal term. Furthermore, inflation would offset the effects of depreciation so that the assessed value may decrease some in real terms but would increase or remain stable in nominal terms. Overall, tax payments to local jurisdictions are expected to remain roughly similar (with some increase) to those made during current plant operations. Also, future increases in value would accompany any additional plant improvements.

Two case study sites in this evaluation illustrate past increases in the taxable assessed value of nuclear plants during normal operation. The ANO facility had a taxable assessed value of $139 million in 1980, which rose to $184 million in 1989. This increase is 3.2 percent compounded yearly and is close to the inflation rate of this time period [the implicit price deflator of the gross national product (GNP) for this 9-year period is 4.4 percent]. The D. C. Cook

nuclear facility increased in taxable assessed value from $365 million to $520 million during this same time period, for a compounded growth rate of 4.0 percent. These annual increases in assessed value are the result of the continued maintenance and replacement of equipment and the general inflation level driving replacement value and income-earning ability of the plant higher.

Taxing policies of the relevant state and local governments also affect the taxable assessed value of a nuclear plant. For example, the Oconee plant is exempt from payment of property taxes on pollution control equipment installed at the plant during its operation, resulting in somewhat smaller tax payments than would otherwise be required. Although county governments often assess the taxable value of nuclear plants, their assessments are frequently based on state guidelines. Additionally, some nuclear plant sites are assessed only by the state, and the local taxing authorities apply their own millage rates to these assessments.

The ANO, Diablo Canyon, and Wolf Creek nuclear plants are typical of plants that are assessed by rules mandated by state tax departments. The local taxing authorities of Arkansas, California, and Kansas employ the unitary approach method to develop the annual taxable assessed value for nuclear plant sites. This method bases the plant valuation on a reasonable value that an investor or business would pay for the plant. The assessed value is based on the following weighted factors: the cost that the parent utility would need to acquire the plant assets, the income-earning ability of the plant, and the stock market valuation of the parent utility (with the market value of the plant apportioned from the value of the utility). The taxable assessed value determined by the state is then multiplied by the individual millage rates of the local taxing authorities to calculate the nuclear plant tax payment.

The increase in taxable assessed value resulting from refurbishment is likely to be greater than past increases in the taxable value of nuclear plants. Although capital expenditures for replacement of plant equipment and maintenance expenditures have occurred during normal operation of the plant, expenditures are likely to be made at a higher level during refurbishment. This would cause the assessed value of the plant to increase at a higher-than-normal growth rate immediately following refurbishment.

The trend in distribution of property taxes paid by the case study nuclear plants to local taxing authorities varies considerably depending on the particular circumstances affecting each plant. If the growth of the local economy is sufficiently large, as in the case of the Oconee plant, the proportion of total local property taxes contributed by the plant would probably decrease. In some cases, the millage levy for various taxing authorities changes over time. For example, the property taxes assessed on the Wolf Creek nuclear facility have been increased at a 17.7 percent annual rate by Coffey County over the past decade, whereas the Burlington School District has had its property tax assessments increase at a smaller, 8.0 percent annual rate since 1980. At the ANO site, tax rates on the nuclear plant for the county and the local school district have been lowered. This was the result of changes in state tax laws in 1986 that caused a rollback on millages, resulting in lower property taxes. This has caused the county and the local school district to receive lower property tax payments in the past 4 years and to consider general tax increases to avoid deficits. In most cases, however, periodic capital expenditures made by the case study nuclear plants have allowed their property tax payments to remain at least stable in real terms over the past decade and to increase in nominal terms.

C.4 Description of Case Study Sites

[**Prev** | **Next** | **Top of file**]

The following sections detail impacts that occurred during construction and operation of each case study plant and project impacts for the refurbishment period and operations during the 20 years following the expiration of the initial license. The ANO case study includes a discussion of the methodology used to assess each impact category at each case study site.

C.4.1 Arkansas Nuclear One

The impact area (those places in which the most pronounced socioeconomic impacts might result from refurbishment and license renewal) for the ANO plant consists of Pope County, Arkansas, and the largest community within Pope

County, Russellville. The selection of this area is based on worker residence patterns, employment, expenditures, and tax payments. Figure C.4 depicts the impact area, and Figure C.5 shows the region in which it is located.

C.4.1.1 Population

This section discusses the local population growth associated with the construction, operation, and license renewal of the ANO plant. Plant-related population growth is driven by the number of workers who migrate into nearby communities to work at a nuclear plant. These individuals and their families, and other persons and their families who move into the area to work in indirect jobs generated by the plant's presence, add to the communities' population totals. Such increases in population constitute the main driver of public service, housing, and land-use impacts, as well as many local economic impacts. Thus, to predict the socioeconomic impacts of a nuclear plant's license renewal, it is necessary to calculate projections of plant-related population growth.

Figure C.4 Socioeconomic impact area associated with Arkansas Nuclear One refurbishment: Pope County.

Figure C.5 Region surrounding the Arkansas Nuclear One nuclear plant.

The projections of population growth calculated in the GEIS are based on a number of assumptions. First, it is assumed that certain key characteristics of the refurbishment and license renewal term work forces would be analogous to those of the original construction and operating work forces, respectively. These key characteristics are (1) the percentage of the work force residing in the study area, (2) the percentage of the work force who in-migrated to the study area, (3) the percentage of in-migrants accompanied by their families, and (4) the ratio of direct to indirect jobs created by work force in-migration. Second, future population growth is represented as occurring during the peak refurbishment year and in the first year of the license renewal term. The population growth because of license renewal would result from the influx of workers over the entire license renewal period, which could last up to 30 years (10 years for refurbishment and 20 years for the license renewal term). But population growth is projected for a single year to provide a worst-case estimate for predicting population-driven impacts. Finally, population growth is projected using U.S. Census 1990 estimates of average family size for the case study states.

Given these assumptions, data concerning construction and operating work force characteristics, and estimates of refurbishment and license renewal term work force sizes, the staff has projected population growth associated with license renewal. Tables throughout this section illustrate the calculations involved in making the projections. Data used to prepare this section were obtained from Socioeconomic Impacts of Nuclear Generating Stations: Arkansas Nuclear One Station Case Study (NUREG/CR-2749, vol. 1); Environmental Assessment Proposed Rule for Nuclear Plant License Renewal (NUREG-1398); SEA refurbishment work force estimates (Appendix B); population projections by the Arkansas State Data Center; and the Arkansas Power and Light Company (AP&L;) (AP&L; 1990).

The discussion of population growth is organized into two time periods. Section C.4.1.1.1 identifies the population growth that Pope County experienced as a result of the construction and operation of ANO from 1969 to 1989. Section C.4.1.1.2 projects the population growth expected to result from ANO's refurbishment period and license renewal term operations beginning in 2014 (Unit 1) based on the growth associated with the plant's initial construction. Also, Section C.4.1.1.2 projects the population growth expected to result from ANO's license renewal term based on the growth associated with operations in the past.

C.4.1.1.1 Growth Resulting from Plant Construction and Operations

ANO's construction resulted in large population increases in Pope County (Table C.13). During the peak construction year, 1974, ANO personnel and their families who migrated to the area to work at the plant, and others who moved into the area to work in jobs generated by the plant's presence, totalled approximately 2756 persons. This influx of new residents represented 8.3 percent of Pope County's total population in 1974 (NUREG/CR-2749, vol. 1, p. 86).

Operations at the ANO plant also have resulted in large population increases in Pope County. In 1989, 2205 permanent plant staff were on-site at ANO; additional contract workers were on-site during outages, but they have not been

included because their presence at the plant was temporary. Of the permanent work force, 90 percent (1985) lived in Pope County (AP&L; 1990). Based on the residential settlement pattern of ANO's 1977 work force, the staff estimated that 43.8 percent (869) of those residing in Pope County in 1989 were prior residents who obtained jobs and that 56.2 percent (1116) were workers who migrated into the area for jobs (Table C.14). Also following the pattern set during plant operations, it is estimated that 60 percent of the in-migrants (670) were accompanied by their families. Assuming the 1990 Arkansas average family size of 3.06 persons, this represents a total in-migration of 2496 residents for the county. Based on the ratio of nonplant jobs created in Pope County in 1977, it is estimated that ANO's 1989 operations created an additional 860 indirect jobs in service industries supported by the spending of ANO workers (NUREG/CR-2749, vol. 1, pp. 56-86). As a result of these indirect jobs, an estimated 454 additional workers and their families (a total of 922 persons) moved into Pope County (Table C.14). In all, approximately 3418 new residents are estimated to have moved into Pope County as a result of ANO's 1989 operations. These new residents made up about 7.7 percent of Pope County's 1989 population of 44,534 (NUREG/CR-2749, vol. 1, pp. 56-86; McFarland 1990).

C.4.1.1.2 Predicted Growth Resulting from License Renewal

As discussed in Section C.3.1, ANO's license renewal would require the completion of a number of refurbishment tasks for Units 1 and 2. Many of the refurbishment tasks are expected to be completed during scheduled refueling outages at each unit during the 10 years that precede the expiration of the initial license. However, the final refurbishment work is expected to be completed during one large refurbishment outage scheduled for each unit in the year before the unit's initial operating license expires.

Assuming the refurbishment schedule as described in Section C.3.1, the peak refurbishment year for ANO Unit 1 is expected to be 2013, and the peak refurbishment year for ANO Unit 2 is expected to be 2017. For each unit, the on-site refurbishment work force would be about the same size, and the work force would be on-site for approximately the same period of time. However, because uncertainties exist concerning the length of the outage and the size of the work force required to complete the refurbishment of a given unit, this section examines a bounding case work force scenario as described in Section C.3.1.

Given the work force scenario detailed in Section C.3.1, it is estimated that 2273 workers would be on-site to complete refurbishment of ANO 1 in 2013 and ANO 2 in 2017 (SEA 1994). Further assuming that the residential distribution of refurbishment workers would be similar to that of the 1974 ANO construction work force, it is estimated that 65 percent (1477) would reside in Pope County. Based on plant construction and operating experience, it is projected that 43.8 percent (516) of those residing in Pope County would be prior residents who obtain refurbishment jobs and that 56.2 percent (830) would be workers who migrate into the area for refurbishment jobs (Table C.15). Also following the pattern set during plant construction and operations, it is assumed that 60 percent of the in-migrants (498) would be accompanied by families. Using the Arkansas average family size of 3.06 persons, total refurbishment worker in-migration would result in 1856 new residents for the county. Based on the ratio of nonplant jobs created in Pope County in 1974, ANO's refurbishment is projected to create an additional 473 indirect jobs in service industries supported by the spending of ANO refurbishment workers. As a result of these indirect jobs, an estimated 246 additional workers and their families (a total of 499 persons) would be projected to move into Pope County (Table C.15). In all, approximately 2355 new residents would be expected to move into Pope County as a result of ANO's refurbishment under the work force scenario. That would represent a 3.7 percent increase in Pope County's projected population of 63,395 in 2014 (NUREG/ CR-2749, vol. 1, pp. 58-71, 82-83).

Once plant refurbishment is completed for ANO Units 1 and 2, the work force would consist mostly of permanent plant staff. There would be additional refurbishment/refueling workers temporarily on-site approximately every 2 years, but they would not be permanent, on-site plant staff; and many of them are expected to commute from outside the study area. It is expected that a maximum of 60 additional permanent workers per unit would be required during the license renewal term, adding 120 workers to ANO's existing work force. Assuming that the new workers' residential distribution would be the same as that of the current workers, approximately 90 percent (108) would reside in Pope County. Based on worker in-migration in 1977, it is expected that 43.8 percent (47) of those residing in Pope County would be prior residents who obtain jobs and 56.2 percent (61) would be workers who migrate into the area for jobs

(Table C.16). Also following the pattern set during plant operations, 60 percent of the in-migrants (37) would be accompanied by their families. Using the Arkansas average family size of 3.06 people, total in-migration would result in 137 new residents for the county. Based on the ratio of nonplant jobs created in Pope County in 1977, ANO's license renewal term is projected to create an additional 47 indirect jobs in service industries supported by the spending of ANO workers. As a result of these indirect jobs, an estimated 25 additional workers and their families (a total of 52 persons) would be projected to move into Pope County (Table C.16). In all, approximately 189 new residents would be expected to move into Pope County as a result of ANO's license renewal term. That would represent 0.3 percent of Pope County's projected population in 2014 (NUREG/ CR-2749, vol. 1, pp. 58-71, 80-82).

C.4.1.2 Housing

The following sections examine the housing impacts that occurred in Pope County during construction and operation of the ANO plant and predict housing impacts that would result from refurbishment activities and continued operation. Possible impacts to housing include changes in the number of housing units, particularly the rate of growth of the housing stock; changes in occupancy rates; changes in the characteristics of the housing stock; and changes in rental rates or property values. The general methodology used to assess past impacts and predict refurbishment- related housing impacts is discussed in Section C.1.5. U.S. Census information; local agencies' housing data; and interviews with local government officials, planners, and realtors provided information about impacts that resulted from the construction and operation of the seven nuclear power plants used as case study sites. These sources provided information about past impacts of a known magnitude that resulted from a known number of in-migrating workers. This provided a basis of comparison when predicting future impacts of refurbishment. Refurbishment-related housing impacts are predicted by comparing refurbishment-related housing demand to the projected housing market (number of units and vacancies). Project-related housing demand is based on the assumption that some unaccompanied workers would share accommodations and is determined by the following equation:

project-related housing demand = workers with families + 0.85 x unaccompanied workers.

Projections of the number of housing units present in the study area at peak refurbishment time are based on historical growth rates of the local housing market. This assumes that average growth rates would remain constant. Non-project-related housing demand at the time of refurbishment is determined by dividing projected population by average household size. The 1990 household size is used in this calculation. Household size is expected to continue its gradual decline, thus suggesting a greater demand for housing. It is believed, however, that the housing market would adequately respond to such a gradual change; therefore, housing vacancies, even though household size decreases, would be very much the same as those predicted using the known 1990 household size.

C.4.1.2.1 Impacts from Plant Construction and Operation

The following discussion begins with a description of the housing market at the time of ANO construction and details project-related housing demand in the study area. A discussion of changes that occurred in the housing market and impacts on housing induced by plant construction follows. Finally, impacts from the operation of ANO on local housing are assessed.

Between 1970 and 1978, 4361 new housing units were added to the existing housing stock of Pope County (based on the number of electrical connections), bringing the total number of units to 14,243 (NUREG/CR-2749, vol. 1; U.S. Bureau of the Census 1972). This 44.3 percent increase represents a rate of growth consistent with census reports of a 50.8 percent increase in housing in Pope County during the 1970-80 intercensal period. Nine hundred of these new units, or 21 percent, were located in Russellville (Figure C.4).

Project-related demand for housing in Pope County has been estimated according to the number of construction workers who moved to the area (NUREG/CR-2749, vol. 1). The ANO work force peaked in 1977 at an average annual employment of 1445 persons. Project-related demand for housing in Pope County peaked in 1977 at 858 units (6.25 percent of the 1977 housing). At this time, ANO Unit 1 had begun commercial operation and ANO Unit 2 was under

construction. New housing units added to the Pope County market totaled 3486 between 1969, when the project began, and 1977, when it peaked. In 1970, 391 housing units were either for rent or for sale in Pope County. In Russellville, the homeowner vacancy rate was 2.6 percent and the rental vacancy rate was 10.4 percent. Housing shortages may have occurred infrequently and lasted for only a short duration (NUREG/CR-2749, vol. 1), but the existing vacancies and the rapidly expanding housing stock for the most part kept pace with project- and non- project-related demand.

The construction of ANO was an important factor in the rapid growth of the Pope County housing stock. Other factors included non-project-related population growth resulting from economic opportunities and the expansion of Arkansas Tech University in Russellville (NUREG/CR-2749, vol. 1). Several housing projects were undertaken during and possibly in response to ANO construction. A 35-ha (87-acre), multi-unit project was begun in 1967 after the announcement of ANO. Widely held local belief is that this development was linked to ANO; however, developers and local realtors indicated that it occurred in response to general population growth that had begun to occur before ANO (NUREG/ CR-2749, vol. 1). Five new mobile home parks were established during plant construction and, along with existing mobile home parks, accommodated as many as one-third of the construction workers and their families. Another development related to construction workers' demand for rental units was the conversion of old single-family homes into apartments (NUREG/CR-2749, vol. 1).

Between 1970 and 1977, considerable construction of multifamily units occurred. In Russellville, where approximately 75 percent of the construction workers located, 50 percent of the new units were multifamily units. Although single-family housing increased 16 percent between 1970 and 1977, multifamily units increased by 42.7 percent.

During the 1970s, when the project-related demand for housing might have affected housing values, the increase in the median value and median rent of housing in Pope County was comparable to that experienced in the state. Median value rose 181 percent in Pope County and 190 percent in the state of Arkansas, whereas median rent rose 73.3 percent in Pope County and 76.4 percent in Arkansas. However, local residents and officials have indicated that during peak ANO construction years, housing values escalated to levels above national trends and rents increased in response to construction workers' demands for housing (NUREG/CR-2749, vol. 1). The addition of multifamily structures in the middle and late 1970s brought housing values and rental rates once again in line with normal inflationary increases occurring statewide.

The end of construction at ANO did not have a destabilizing effect on the housing market. The project-related demand declined gradually and was abated by the gradual in-migration of the operations work force. By 1980, when both units were in commercial operation, housing vacancy rates in Pope County were comparable to those in the state of Arkansas. The home-owner vacancy rate was 2.1 percent in Pope County and 1.6 percent in Arkansas, whereas rental vacancy rate was 8.0 percent in Pope County and 8.8 percent in Arkansas.

Operation of ANO has had little effect, if any, on housing in the area. The roads and water and gas lines associated with the plant have facilitated residential development in areas neighboring the plant but have not been as big an attraction as the aesthetic quality of Lake Dardanelle. Indirectly, the plant may have had some effects on property values because the good wages employees receive have enabled them to buy or build homes that are considered expensive relative to other homes in the area.

In summary, substantial changes occurred in the housing market, housing characteristics, and property values during the construction period of ANO. The conversion of large homes into apartments, the increase in multifamily housing, and the temporary increase in housing values and rental rates are examples of this change. ANO may have been the impetus for, or a contributing factor to, these changes; however, other industrial development and the growth of the local college also spawned some of this change. For example, the tremendous growth in the housing market had begun before the construction of ANO. Also, housing occupied by construction workers was absorbed into the market and occupied by non-project-related population. Considering all these factors, the impact on housing during ANO construction was moderate.

C.4.1.2.2 Predicted Impacts of License Renewal

Project-related population increase and the commensurate housing demand would be the cause of new housing-related impacts during refurbishment activities. A summary of recent and anticipated growth in housing is provided. This is followed by predictions of possible impacts during refurbishment and the license renewal term.

In the period 1980-90, housing in Pope County increased 23.8 percent above the 1980 level. Assuming this rate of growth will continue, there would be approximately 30,900 housing units in Pope County in 2014. Based on a projected population of 63,395 and a 1990 average household size of 2.61 persons, 24,259 housing units would be required to accommodate Pope County's 2014 population. This suggests that there will be available housing, possibly as many as 6500 units in 2014. Even if Pope County's growth were to slow considerably, e.g., to 1.6 percent annually (a rate equal to the average annual rate that occurred between 1980 and 1986), there will be about 25,650 housing units in 2014 and over 1300 vacancies.

According to the estimate of the number of refurbishment workers required for the project and based on plant construction experience, 830 workers of the total work force of 2273 are expected to migrate to Pope County for refurbishment jobs. Of these in-migrants, 498 are expected to be accompanied by families. Some doubling-up is expected to occur among the 332 unaccompanied workers, so that each unaccompanied mover would require 0.85 housing unit. In 2013, the refurbishment-related housing demand would be 780 housing units (where refurbishment-related housing demand = workers with families + 0.85 ? unaccompanied workers). In addition, numerous indirect jobs are expected to result from project workers' spending. An additional 196 indirect workers are projected to move to Pope County, bringing the total project-related housing demand in the peak year of refurbishment to 976 units.

The projected refurbishment-related housing demand is larger than the original construction-related housing demand of 858 units, but the number of housing units in the study area will have increased 86 to 117 percent under the conservative and current growth rates, respectively, between peak construction and refurbishment periods. Refurbishment-related housing demand would account for 3.8 or 3.2 percent (under the conservative and current growth rates, respectively) of the projected housing units in the study area in 2014, compared to construction- related demand in 1977 accounting for 6.25 percent of the housing units. Changes in the characteristics of the Pope County housing market that have occurred during or since plant construction should improve the accommodation of refurbishment-related workers. These changes include a greater proportion of multifamily units and the addition of mobile home parks. Some of the demand may be met by construction workers' recreational vehicles or mobile homes; this may require, however, the temporary addition or expansion of mobile home parks. However, no substantial construction of new housing units is expected to occur during refurbishment activities unless other economic and industrial growth warrants it, as was the case before and during ANO construction. Because housing demand would be small relative to the existing housing market, would not exceed projected vacancies, and would be even less than that experienced during construction, refurbishment-related housing demand is expected to have a small new impact on the study area housing market.

Housing impacts related to refueling activities and housing value and marketability that would occur as a result of continued plant operation during the license renewal term are the same as those currently being experienced (Section C.4.1.2.1). The 120 additional operations workers (60 per unit) and the commensurate housing demand would cause only small new housing impacts.

C.4.1.3 Taxes

The local impact of plant-related property taxes is presented here and in the other six case study presentations. Where information is available, the assessed valuation of the nuclear plant and the study area is presented to show the importance to the tax base from the start of construction to the current period. The impact of taxes on specific taxing authorities, such as local school districts, is presented. For these jurisdictions, the magnitude of plant-related property

taxes relative to total local jurisdiction revenues is shown, again from the beginning of construction to the latest tax period in which information was available.

Each case study lists (1) the taxing authorities receiving revenues from the nuclear plants and (2) the property tax payments and tax or millage rates from the nuclear plants. At case study sites where the state assesses the value of the nuclear plant, the state tax valuation method is described. Tax reform legislation affecting the tax revenues from nuclear plants has been enacted in a few of the states where case study nuclear plant sites are located. The impact on total tax revenues and the taxing authority in general is described in sites where such legislation has been passed.

Tax and total revenue information was obtained directly from the governments that tax the case study nuclear plants. This information was obtained, where available, for the years 1980, 1985, and 1989. This longitudinal tax and revenue data allowed the evaluation of trends in nuclear plant tax revenue impacts over the past decade.

C.4.1.3.1 Impacts from Plant Construction and Operation

The jurisdictions that receive the bulk of the taxes paid by AP&L; for ANO station are Pope County and the Russellville School District. Property taxes are the principal source of revenue for Arkansas counties and municipalities. Table C.17 shows AP&L;'s annual tax payments to Pope County for ANO during the 1968-89 period (NUREG/CR-2749, vol. 1).

From 1968 through 1989, Pope County's assessed valuation increased at an annual rate of 10.1 percent in real terms. During this same time period, ANO had its assessed valuation increase at a 21.9 percent real annual rate. ANO's portion of Pope County's total assessed valuation increased sharply from 1968 to 1980, from 5.4 to 73.6 percent. Thereafter, ANO's portion has dropped to 46.2 percent in 1989. Taxes paid to Pope County increased considerably as construction of the plant progressed in the early 1970s and more than tripled between 1972 and 1976 once construction was completed.

In 1980, the state legislative passed Amendment 59, which prevented reduction in taxes on utility properties for the first 5 years after the amendment's passage. It required a gradual reduction (to occur over the succeeding 5 years) in the millage rates assessed against utility property. Because of Amendment 59, ANO's tax revenues to the county have steadily decreased from approximately $1.6 million in 1985 to $1.2 million in 1989.

The recipient of the largest tax payments within Pope County was the Russellville School District. In 1978, property within the jurisdiction of the Russellville School District was assessed at a tax rate of 50 mills, whereas the tax rate for Pope County was 9 mills (Arkansas State Department of Education 1990). However, this millage rate for the school district has been falling throughout the 1980s. In 1985 the combined millage rate for real estate and personal property components in the Russellville School District was 48.1, but by 1989 it had fallen to 22.5. During the 1980s, the assessed value of property within the district rose steadily from $176.5 million in 1980 to $275.6 million in 1985 and to $341.1 million in 1989. In real terms, the assessed valuation in the Russellville School District grew at an annual rate of 3.1 percent. Table C.18 shows the revenue impact of ANO.

To compare the amount of taxes paid to the Russellville School District in real terms during the 1980s, the assessed valuation of the school district is deflated in real terms by the GNP deflator and then multiplied by the millage rate for the school district for the year in question. The resulting estimated taxes for Russellville School District increased at a 3 percent annual real rate from 1980 through 1985 but then declined at a 15.4 percent annual real rate from 1985 to 1989. Decreased millage rates resulting from Amendment 59 are largely the cause for the decreased revenue. As tax revenues decline, the school district will likely seek a tax increase in the future.

The Russellville School District ranked 66th out of the 329 school districts in the state of Arkansas for expenses per student in 1989. This is up from a ranking of 132 in 1988. The district is currently ranked 7th out of 329 in teachers' salaries in 1989 (the comparable ranking in 1988 was 25th).

Currently, Pope County is in a period of transition from a farm-oriented community to an area of light industrial development. Industrial development has increased substantially over the last 20 years. Undoubtedly, some of the development in the county is associated with the substantial tax revenues from ANO; however, the introduction of Interstate 40 through the county has had a major impact on development in the area. Officials at Pope County and Russellville School District have indicated that improvements in the county and school district and substantially reduced tax rates were possible because of ANO.

C.4.1.3.2 Predicted Impacts of License Renewal

A new tax-related impact is expected to occur during refurbishment of ANO. This new impact does not involve capital improvements that take place during the final refurbishment outage. Rather, it results from capital improvements that are undertaken during the current term outages, which would increase the assessed value of the plant during this time and, thus, increase ANO's tax payments to local jurisdictions. The magnitude of the impact depends on AP&L;'s decision about which improvements would occur early on and which would be done during the final outage. For example, if the steam generator is replaced during a current term outage, the assessed value may increase considerably before the license renewal term begins. If steam generator replacement and other major capital improvements are not undertaken early on, the increase in assessed valuation may be only minor. The increase, in either case, is expected to cause only an small to moderate new tax impact.

During the license renewal term, the tax-related impact would be primarily the continuation of tax payments ANO is currently making to local jurisdictions. A new impact would result from the increase in tax payments from improvement made at ANO during the final refurbishment period. Thus, tax revenues would increase in absolute terms but may remain constant as a percentage of total revenues of Pope County and the Russellville School District. ANO's contribution to the county's total revenues has fallen during the past decade, from 49 percent of the total revenues in 1980 to 26 percent in 1989. The additional tax payments during the license renewal term may halt this trend. Based on current conditions, ANO tax revenues--the continuing and additional payments combined--are expected to continue to make up a large share of the total revenues. Decreased millages that have resulted from ANO's substantial tax contributions may remain, although Amendment 59 does allow for millage increases. The large tax-related impact currently being experienced would continue during the license renewal term.

C.4.1.4 Public Services

The general methodological approach used to predict future impacts is discussed in Section C.1. For most public services, impacts were calculated based on the projected number of in-migrating workers and on the projected state of the local infrastructure. The expected number of in-migrants was calculated separately for each case study site, based on the in-migration patterns observed in past studies at these same sites. Where historic data were not available, in-migration rates were estimated on the basis of comparisons with sites that were similar in terms of population density and proximity to metropolitan areas. Only in the area of transportation was in-migration considered unimportant, since all project workers (and plant-related equipment) will use local roads to access the project site.

To project impacts to local educational systems, two important factors were the number of in-migrating workers accompanied by their families and the associated family size. Assumptions about these key variables were based on past patterns observed at the case study sites. Specifically, the number of in-migrating workers expected to bring their families with them at any given site was calculated based on the percentage of past workers accompanied by their families at the same site. Refurbishment workers were assumed to follow the same pattern as past construction workers, and future operations workers were assumed to be the same as past operation workers. Average household size for each site was determined from current state- specific data. For each family at a given site, the number of children was considered to be this average family size minus the two parents. The total number of additional children of plant workers was calculated by multiplying the number of in-migrating families by the expected number of children per family. Assuming that dependent children were equally distributed between the ages of 0 and 18, 68.4 percent of the

children were projected to be of school age (6-18 years). This was the number of additional children expected to be enrolled in local schools.

C.4.1.4.1 Impacts from Plant Construction and Operations

ANO has affected public services in several surrounding counties, municipalities, and school districts, but three jurisdictions have been affected more than others: the Russellville School District, Pope County, and the city of Russellville. Each entity provides different services and has been affected in varying ways by ANO, as discussed below. A few construction impacts were noticeable in education and public utilities, but projected impacts from relicensing should be less significant. Information regarding expenditures is discussed in detail in Section C.4.1.3.

Education

The Russellville School District has seen much change as a result of the ANO plant. During the 1960s, the school district was facing severe financial difficulty and overcrowding. Even though Russellville's economy was growing and the population was growing with it, the Russellville School District had problems coping with the rise in enrollment. Student/teacher ratios reached as high as 35 to 1 during the 1960s, and a tax hike was approved to fund the building of a new high school.

Local residents saw the ANO plant as a solution to the problem. Taxes from ANO in its first 3 years of construction helped to pay for the new high school, but it was not until several years later (about 1973) that the Russellville School District's situation stabilized. It was difficult to accommodate new students brought in by ANO's construction and other growth, but once the high school was complete, assimilation was easy (NUREG/CR-2749, vol. 1, p. 116).

The student/teacher ratio began falling steadily after 1968; by 1980, it had fallen to 20 to 1 and the Russellville School District teachers were being paid more than others in Arkansas. Through ANO's tax payments, the biggest impact on the system, the district was able to recruit highly qualified teachers, which played a part in encouraging further economic growth in Russellville (NUREG/CR-2749, vol. 1, p. 116).

Like the plant's construction, operations have generated economic growth in Russellville, which in turn has affected the Russellville School District. Several informants noted that firms have transferred employees to Pope County, and some new businesses have appeared because of ANO's location. For instance, one recent company move into Russellville is expected to increase school enrollment in the area by 50 to 100 students. Refueling activities also have an effect on the Russellville School District, but the concurrent rises in enrollment are minor and short-lived.

Although the positive financial impacts of the ANO plant were tremendous, the district is once again experiencing financial difficulty. The state's constitution was amended in 1980 to modify its taxation policies. The new taxation policies caused a reduction in utility tax payments beginning in 1985. This resulted in lower revenues for the school district. As ANO taxes are a major source of monies for the Russellville School District, the drop in funds has left the school system in a financial dilemma. The district will likely seek a tax increase in the future, because of program expansion during the affluent years.

Transportation

The transportation network in Pope County, which was already a well-developed system, did not suffer as a result of ANO's construction. In fact, taxes paid by ANO by 1980 aided in the resurfacing of approximately one-third of all county roads. AP&L; improved and extended the highway system to the ANO site and port facilities, both of which are on the Lake Dardanelle peninsula. Informants also reported that unloading facilities were constructed near the plant and that port activity increased during construction.

Key information sources indicated that ANO's construction created no problems with traffic congestion. Commuters to the plant generally bypassed the city, and construction workers who moved into Russellville were well dispersed throughout the community, which further diminished traffic impacts (NUREG/CR-2749, vol. 1, p. 119).

The city was also well served with a rail system, since it is a regional rail hub. A rail spur was constructed from the main east-west county line to the plant site for the shipment of construction equipment (NUREG/CR-2749, vol. 1, p. 118).

Since ANO began operations, no sources indicated problems with traffic congestion nor have sources reported impacts from maintenance and refueling at the plant.

Public Safety

Public safety services in Pope County have benefitted fiscally from ANO. Expenditures for public protection increased rather steadily during construction, enabling Pope County's police force to approximately double during that period, and the county ambulance service was expanded during construction. The Russellville Police Department also added several employees, but the relatively large full-time fire department, which was established before ANO was built, was less affected (NUREG/CR-2749, vol. 1, p. 119).

No countywide fire protection system exists, but the county does assist communities financially to establish municipal systems, and there are numerous rural volunteer fire companies. AP&L; also undertook the development of a countywide emergency communications system, linking ANO directly to hospitals, police, and fire departments. ANO also funded emergency programs and drills (NUREG/CR-2749, vol. 1, p. 119). Also, the city has a nuclear emergency contingency plan as part of its comprehensive plan. One source stated the emergency plan has been tested and proven successful.

No impacts from ANO's operations and maintenance/refueling outages were reported by any public safety official.

Social Services

Social services have not been affected by the plant. There is no evidence attributing increased demands on social services to the construction of ANO (NUREG/CR-2749, vol. 1, p. 120). No informant reported impacts on services because of plant operations or refurbishments.

Public Utilities

In Pope County, sources noted that public utilities have not been affected by ANO, except that the water system was described as very inadequate. Other informants stated that demands on sewer and water increased at that time, but the strain on the system was manageable.

In much of the county area outside Russellville, water is currently provided by wells on-site. However, part of rural Pope County is in a water district north of Russellville, and there are plans to expand the system farther into the rural areas of the county.

Russellville's water supply is getting smaller, which will affect water availability and recreation in the county. New water sources will be sought in the future. Meanwhile, ANO is currently the third largest individual consumer of water in Russellville; thus, its operations do affect the system moderately. The plant's demand is increasing also.

Tourism

Reports indicated that the ANO plant has had only small effects on tourism in the area. There is some tourism on Lake Dardanelle, one of the largest recreational resources in the area, and across the reservoir from the plant is the popular Lake Dardanelle State Park. One official from the chamber of commerce stated that during construction there was a

short-lived increase in visitors to Pope County. Another noted that a number of travelers on nearby I-40 still stop to see the plant.

Recreation

Recreation was not affected by construction activities at ANO as much as it has been from operations. However, these impacts have still been small. One official noted a short-lived increase in water recreation during construction, but the city recreation director was uncertain about effects on organized recreation.

It was also reported that operations at the plant have had only slight effects on recreation, although the city is experiencing much growth in its recreation programs. Another source reported that Lake Dardanelle and its corresponding state park are popular sites for fishing, boating, and other activities. Loop also indicated that fishing near the plant was very good and that no recreational areas along the reservoir had been affected adversely by ANO. The chamber of commerce also noted an increase in outdoor recreation and tourism attributable to operations at ANO, but these effects have been insignificant.

No impacts on recreation from refurbishments were reported. The water supply in Russellville, previously mentioned, is also becoming an issue with water recreation in some areas.

C.4.1.4.2 Predicted Impacts of License Renewal

Based on the estimated 2273 direct workers required during peak refurbishment, the staff estimates that 498 direct workers and 123 indirect workers will migrate with their families to Pope County (Section C.4.1.1.2). The number of children accompanying these workers is estimated using the Arkansas average family size (3.07) and assuming that all families include two adults. Children are expected to be evenly distributed in age from ?1 to 18 years. Assuming 72.2 percent of these children are school-age (5 to 18 years), there will be an average of 0.77 school-age children per in-migrating family, or a total of 478 new students in Pope County. This represents a 4.0 percent increase above the projected number of school-age children in Pope County in 2014 (assuming the 1990 age distribution of the population) and equates to an average of 37 students per grade level. Moderate impacts could result, especially if the students are concentrated geographically (e.g., in Russellville).

An analysis of the projected BWR bounding case work force (1500 persons) was conducted to determine if a smaller work force would result in a lesser impact. (This is a hypothetical scenario because ANO is a PWR.) The 411 in-migrating direct and indirect workers who bring their families to Pope County would be accompanied by 321 school-age children (or 25 per grade). This would result in a 2.6 percent increase in the projected number of school age children in Pope County in 2013. Although only small impacts are likely, moderate impacts could result if the children are concentrated geographically or if facilities and classes are already at their peak capacity.

An analysis of potential impacts to education under the BWR typical work force scenario (1017 workers) finds that there would be 279 direct and indirect workers migrating to Pope County with their families. The associated 215 new school-age children (or 16.5 per grade level) would result in a 1.8 percent increase in the projected number of school-age children in Pope County in 2013. This increase in enrollment will likely cause only small impacts to the education system.

During ANO construction, when the number of in-migrants peaked at 2756 (an 8.3 percent increase in Pope County population), there were small impacts on transportation, social services, public utilities, tourism, and recreation. Projected refurbishment-related in-migration (15 percent less than construction in-migration) will increase the population 3.7 percent. Therefore, projected impacts on these public services from refurbishment will be small. Public safety, which has been fiscally affected by ANO, also should see only minor changes during the refurbishment period.

Impacts to all public services from continued operations also should be small because only a slight increase in population will occur. However, the public water system may be moderately affected because of the diminishing local water supply and increasing water usage by the plant.

C.4.1.5 Off-Site Land Use

This section describes the off-site land-use impacts of the construction, operation, and license renewal of the ANO plant. The discussion of impacts is primarily concerned with land use in the immediate vicinity of the plant, but impacts for the remainder of Pope County are described where appropriate. Land-use impacts are examined for two time periods. First, Section C.4.1.5.1 identifies the land-use impacts of ANO's construction and operation. Next, Section C.4.1.5.2 projects the land-use impacts of ANO's refurbishment period based on the impacts that occurred during the plant's construction. Also, Section C.4.1.5.2 projects the land-use impacts of the plant's license renewal term based on the impacts that have occurred during operations. Information sources for this report include the Final Environmental Statement Related to the Arkansas Nuclear One, Units 1 and 2 (AEC Dockets 50-313 and 50-368); the Final Environmental Statement Related to Operation of Arkansas Nuclear One, Unit 2 (NUREG-0254); Socioeconomic Impacts of Nuclear Generating Stations: Arkansas Nuclear One Station Case Study (NUREG/CR-2749, vol. 1); and interviews with key information sources in Pope County.

The assessment of land-use impacts began with a review of EISs for a number of nuclear plants and site-specific reports on the seven case studies. This review identified land-use impacts that had occurred during plant construction and operations and key issues that would be addressed in assessing the impacts of license renewal. The key land-use issues identified were

- changing land-use patterns influenced by plant location, plant-related population growth, and plant tax payments;
- changing residential, commercial, and industrial development rates and patterns influenced by plant location, plant-related population growth, and plant tax payments; and
- changing land-use regulations or zoning patterns resulting from plant-induced changes in land use and development patterns.

With these key issues, telephone survey forms were developed and administered to local planners, economic development specialists, and realtors in the seven case study areas (Section C.7). By combining the results of the literature review with those of the telephone survey, the factors most useful in predicting land-use impacts were identified. By comparing the impact predictors to the impacts that had been observed at the seven case studies, conclusions could be drawn concerning the relationships between predictor magnitude and impact significance. The impacts of plant refurbishment and license renewal were projected for each case study on the basis of relationships between the magnitude of impact predictors, the local areas' existing land-use and development patterns, and the significance of the land-use impacts that occurred in the past.

C.4.1.5.1 Impacts from Plant Construction and Operation

ANO was constructed on a rural 471-ha (1164-acre) site situated on a peninsula on the northern bank of Lake Dardanelle near Russellville. The land upon which the plant was built previously had been used for marginal farming and livestock grazing. In 1968, when plant construction began, the land in the immediate vicinity of the ANO site was almost wholly undeveloped and not under any form of zoning or land-use regulation. Some rural residences were on the peninsula, but primary land uses there included commercial forestry, agriculture, and recreational uses associated with Lake Dardanelle.

The construction and operation of ANO have had moderate direct impacts on land use in the immediate vicinity of the plant. The rural character of the peninsula upon which ANO is located has been altered somewhat because the plant has served as a direct impetus for much of the mixed-use development that has occurred there. This mixed-use development has been fairly limited, but it consists mostly of buildings used by contractors and engineering firms (such as Bechtel) associated with ANO. In addition, the Pope County Evacuation Team is located on the peninsula near the

nuclear plant. However, ANO has neither directly encouraged nor impeded large-scale commercial or industrial development of the peninsula.

ANO's presence on the peninsula also has resulted in moderate indirect land-use impacts. Before ANO was constructed, a number of small houses and cabins were on the peninsula with no discernable pattern of subdivision or residential development. Since plant construction began, rural subdivisions with single family homes have been built near the ANO site [some within 0.4 km (0.25 mile)]. Many of these homes, especially those with lakefront lots, are relatively expensive in the context of the local real estate market. Key information sources indicated that the primary reason for this residential development was the availability of lakefront property with scenic mountain vistas. But ANO's presence also encouraged residential land use on the peninsula indirectly, as builders began to take advantage of the roads and water lines put in place for the plant's use to develop lakefront residential properties.

ANO's construction and operation have also had moderate direct and indirect impacts on land use in other parts of Pope County. In the early 1970s, developers further subdivided the western section of Russellville for single family residential use. The subdivision and development were the result, in part, of the influx of residents associated with ANO, as construction-related population growth represented as much as 8.3 percent of Pope County's total population in 1974. This growth, combined with the economic benefits the plant brought to the county, helped create additional housing demand. However, the residential construction that occurred did not create significant changes in land-use or development patterns.

The economic benefits of ANO's operation, such as the generation of both direct and indirect jobs, salaries, and tax expenditures in the local economy, continue to help shape Russellville's residential and commercial growth rates and development patterns. Key informants agreed that ANO's direct and indirect residential and commercial land-use impacts had been very positive for Russellville and Pope County but that ANO's impacts in terms of helping recruit new industries to the area had been only neutral or slightly positive (NUREG/ CR-2749, vol. 1, p. 140).

C.4.1.5.2 Predicted Impacts of License Renewal

With the plant-related population increase projected for Pope County, the land-use impacts of ANO's refurbishment are expected to be small. Using the bounding-case work force scenario, refurbishment-related population growth is projected to represent approximately a 9.3 percent increase in the county's projected population in 2014. Increases of this size would result in small new impacts to land-use and development patterns, especially when compared to those driven by the construction-related growth peak of 8.3 percent in 1974. ANO's refurbishment and operation would continue to attract some plant-related mixed-use development to the peninsula directly, but this development is not expected to cause major changes in local land-use patterns.

The indirect land-use impacts of ANO's license renewal term are expected to be moderate. Population growth associated with the plant's continued operation is projected to represent only a 0.3 percent increase in Pope County's projected 2014 population, so the new land-use impacts of worker in-migration are expected to be minimal. However, key sources expect residential development to continue on the peninsula because of the availability of desirable lakefront property. As in the past, this continued residential development would be guided by the provision of roads and water service, an indirect impact of ANO's presence. The plant's operation also would result in continued economic benefits such as direct and indirect salaries and tax contributions for Pope County. But the tax benefits may be less than those previously available because of Amendment 59, which in the mid- to late 1980s caused reductions in tax payments on utility property. Nonetheless, ANO's operation would provide Pope County with economic benefits that would continue to shape land-use and development patterns in Russellville and the rest of the county through the provision of municipal services.

C.4.1.6 Economic Structure

Employment and income effects on the nuclear plant case study areas were identified using historical data generated by Mountain West Research, InC., in site-specific studies (NUREG/CR-2749, vols. 1-12) and from time series information

(from 1968 and forecasted to 2010) on county employment and income provided by NPA. Past plant-related employment was estimated by Mountain West using the RIMS methodology; employees were classified as direct basic, indirect basic, other basic, or nonbasic; and the number of jobs filled by current residents and by in-migrants was identified.

To determine the magnitude of plant-related employment relative to total local employment, the projected number of plant-related jobs filled by people living in the study area (prior residents or in-migrants) was divided by the NPA employment projections. The NPA county-level figures describe employment by place of work rather than by place of residence; however, these values were used as a surrogate for employment by place of residence. This approach was chosen to avoid the substantial error that could be introduced by projecting employment, in light of the large uncertainties concerning future population, family size, family work patterns, and other important parameters. If the study area makes up only part of a county, future study area employment was projected from the current work force of the study area using the same growth rate NPA projected for the county in which the plant is sited. Projected employment effects are presented for the refurbishment scenario and for continued operations during the license renewal term.

For descriptive purposes, the magnitude of plant-related income relative to total study area income also was determined. Projected income for direct basic workers residing in the study area was calculated by multiplying the projected number of direct workers in the study area by the projected average wage for transportation, communication, and public utility workers for the study area county. This average wage was determined by dividing the NPA projection of total county income for that sector by the projected number of workers in that sector countywide.

Projected income for indirect basic and nonbasic workers (employed in jobs produced by plant expenditures and spending by direct employees in the study area) was calculated by multiplying the projected number of these workers residing in the study area by the projected average wage for this type of employment. Plant-related indirect basic and nonbasic workers were assumed to be largely retail and service workers, so their average wage was calculated by summing the projected average wages in those two sectors, weighting the retail salary as 30 percent and the service salary as 70 percent. The average wage in each of these sectors was determined in the manner described above for transportation, communication, and public utility workers.

The magnitude of future plant-related income relative to total study area income was calculated by summing projected incomes for direct, indirect basic, and nonbasic workers and dividing by the total income that NPA projected for the study area.

C.4.1.6.1 Impacts from Plant Construction and Operation

ANO's construction and operation have had moderate and large impacts, respectively, on Pope County's economic structure. Pope County's labor pool has provided employees for the plant, both during construction and operations, and the plant has provided county residents with jobs that have higher incomes than were previously available. Secondary employment and income have also resulted from the spending of ANO workers in local communities, and the taxes paid to the Pope County government and the Russellville School District by ANO have led to increased employment and income.

Table C.19 gives the estimated employment and expenditure effects of ANO for residents of Pope County. Construction employment at ANO rose steadily from 1969 to 1974, gaining fivefold from 215 to 1100. The operations work force increased at a slower pace; from 196 in 1972 to 462 in 1980. Operations employment in 1989 was about 2205 workers, of whom 1985 were Pope County residents.

C.4.1.6.2 Predicted Impacts of License Renewal

The work force scenario detailed in Section C.3.1 was used to estimate the employment effects of refurbishment at ANO. Table C.20 shows the total direct and indirect plant-related employment of Pope County residents during refurbishment.

It is projected that in 2013 ANO would employ 1477 county residents as refurbishment workers (Section C.4.1.1.2). Indirect employment that would result from purchases of goods and services during refurbishment is projected to create 454 additional jobs for Pope County residents.

The total direct and indirect employment affecting Pope County during the peak refurbishment year is therefore projected to be 1931. This employment is projected to be 5.8 percent of the total Pope County work force in 2013, resulting in moderate impacts. Relatively few new plant-related jobs would be created at ANO during the license renewal term. Nearly all plant-related employment (and associated impacts) expected during that time period would represent a continuation of employment (and impacts) from past operations. Table C.21 shows the impact of the increased labor requirements at ANO after 2013.

The license renewal term work force for ANO would require an estimated 120 additional employees (Section C.4.1.1.2). Of these additional employees, 108 are projected to be Pope County residents. An estimated 47 indirect jobs would also be created because of the license renewal term, and 45 of the jobs are expected to be filled by Pope County residents. With the continued effects of the plant's current employment and the additional jobs to be created, total direct and indirect license renewal term employment is projected to represent 8.9 percent of Pope County employment in 2013. Because Pope County meets the conditions described in Section 4.7.6.1, license renewal term employment represents a large impact to Pope County.

C.4.1.7 Historic and Aesthetic Resources

The assessment of the impacts of (1) past construction and operation and (2) projected refurbishment and postrelicensing operation of nuclear power plants on historic and aesthetic resources began with a review of the original license application documents, the professional literature, and the popular literature. From these, the staff gleaned a sense of the projected and realized impacts at the various power plants. These experiences were examined in some detail through use of case studies conducted at seven representative nuclear power plants across the United States.

By using the original license application documents and telephone interviews with key local informants (see Section C.7 for a sample of the questions asked), those factors most useful in projecting impacts were identified. By examining the associations between these impact predictors and the resulting impacts at the seven sites, the staff drew conclusions concerning the relationships between predictor magnitude and impact significance. The staff then made projections about the impacts of power plant refurbishment and post-relicensing operation for each case study site based on relationships among the magnitude of these impact predictors, the current and anticipated states of critical infrastructure components, and the significance of impacts observed during analogous past periods.

The assessment varies from more traditional aesthetic analyses in that it relies heavily on the opinions and representations of key local sources of information as proxies for the lay local residents' and other users' feelings and preferences. Because of the selection of only these few sources, there could be errors of commission or omission in communicating these values or in the staff's interpretations of the elicited concerns.

This section describes the impacts that the construction and operation of the ANO power plant have had on historic and aesthetic resources and projects the expected impacts of the plant's refurbishment and post-relicensing operations. Information sources include the Final Environmental Statement Related to the Arkansas Nuclear One, Unit 1 (AEC Docket 50-313); the Final Environmental Statement Related to Operation of Arkansas Nuclear One, Unit 2 (NUREG-0254); and interviews with key information sources in Pope County, Arkansas.

C.4.1.7.1 Impacts from Plant Construction and Operation

ANO is located in the Arkansas Valley, an area that contains many important American Indian archaeological sites, and key sources indicated that ANO's construction did disturb some of the sites. In addition, one respondent (Dr. Stewart-Abernathy of the Arkansas Archaeological Survey and Arkansas Technological University) stated that ANO's operation, particularly the use of service roads to access the station's transmission lines, had caused the erosion of archaeological sites. The respondent did not know the extent to which the sites had been researched or the relative significance of the sites. He was not sure of the extent to which they had been damaged by ANO's construction and operation, and did not know whether mitigation had been attempted at all or, if attempted, whether it had been unsuccessful. However, all respondents agreed that Lake Dardanelle's--impoundment, which predated and was not related to ANO's construction--had inundated a number of relatively significant archaeological sites and that the lake's creation had had a much greater impact than ANO's construction. The Arkansas Archeological Survey Coordinating Office, the Arkansas State Parks and Tourism Commission, and the Arkansas State Historic Preservation Office all determined that the construction and operation of the station would not affect any historic structures or sites listed in the National Register of Historic Places (AEC Docket 50-313, p. 2-15; NUREG-0254, p. 2-2). In general, local sources felt that ANO's construction and operation had disturbed some American Indian archaeological sites, but they agreed that the power plant had no effect on other historic resources in Pope County. Overall, the construction and operation of the ANO plant have had generally small impacts on historic resources in Pope County.

ANO's construction and operation have also had small to moderate impacts on aesthetic resources in Pope County. The most noticeable aesthetic impact of ANO's operation results from the presence of Unit 2's 140-m (450-ft) high, natural-draft cooling tower and the steam plume it emits (staff observation and Stewart-Abernathy). The station's cooling tower is visible from at least 16 km (10 miles) away, and its plume can be seen from a much greater distance (AEC Docket 50 -313). The cooling tower and its plume have adverse effects on the natural beauty of the area, but key informants indicated that the station's appearance had not discouraged residential or recreational land uses on Lake Dardanelle and had not been a subject of protest.

C.4.1.7.2 Predicted Impacts of License Renewal

Because ANO's refurbishment is not expected to change the visible profile of the plant, the impacts of refurbishment on aesthetic resources would be much smaller than those experienced during construction. However, the impacts of post-relicensing operations are likely to be the same as those experienced during the original operating period. Operations impacts would result from the presence of ANO's cooling tower and steam plume. As in the past, the station would have small to moderate impacts on aesthetic resources.

ANO's refurbishment is not expected to involve the physical conversion of additional land for the station's use; however, any disturbance of land (e.g., grading an area for storage of refurbishment equipment or parts, or constructing a new service road) introduces the potential for impacts to archaeological resources. Although impacts to historic resources (including archaeological resources) are expected to be small during both refurbishment and operations, this determination must be made according to the National Historic Preservation Act of 1966 through consultation with the state historic preservation officer (SHPO). Impacts, if any, during the license renewal term are expected to be small; however, consultation with the SHPO is required.

C.4.2 D. C. Cook

The impact area--the area in which the most pronounced socioeconomic impacts might result from refurbishment and license renewal for D. C. Cook--consists of Berrien County, the city of Bridgman, and Lake Township, Michigan. For the purpose of assessing the impacts of D. C. Cook on taxes and economic structure, the impact area is limited to Bridgman and Lake Township. Both of these are jurisdictions within Berrien County that are close to the plant. The selection of this area is based on worker residence patterns, employment, expenditures, and tax payments. Figure C.6 depicts the impact area, and Figure C.7 shows the region in which it is located.

C.4.2.1 Population

This section discusses the local population growth associated with the construction, operation, and license renewal of the D. C. Cook Nuclear Plant. Section C.4.1 describes the methodology used to project population growth for all plants. Data used to prepare this section were obtained from Socioeconomic Impacts of Nuclear Generating Stations: D. C. Cook Case Study (NUREG/CR-2749, vol. 4); Environmental Assessment Proposed Rule for Nuclear Plant License Renewal (NUREG-1398); SEA refurbishment work force estimates (Appendix B; SEA 1994); population projections by the Southwestern Michigan Regional Planning Commission; and the Indiana and Michigan Power Company.

The discussion of population growth is organized into two time periods. Section C.4.2.1.1 identifies the population growth that the study area experienced as a result of the construction and operation of D. C. Cook from 1969 to 1990. Section C.4.2.1.2 projects the population growth that is expected to result from D. C. Cook's refurbishment period and license renewal term operations beginning in 2015 (Unit 1) based on the growth associated with the plant's initial construction. Section C.4.2.1.2 also projects the population growth expected to result from D. C. Cook's license renewal term based on the growth associated with operations in the past.

C.4.2.1.1 Growth Resulting from Plant Construction and Operation

D. C. Cook's construction resulted in noticeable population increases in the Bridgman/Lake Township area surrounding the plant (Table C.22). During the peak construction year, 1972, D. C. Cook personnel and their families who migrated to the area to work at the plant and others who moved into the area to work in jobs generated by the plant's presence, totalled approximately 175 persons. This influx of new residents represented 4.6 percent of the two communities' populations.

Figure C.6 Socioeconomic impact area associated with D. C. Cook refurbishment, including Berrien County, Lake Township, and Birdgman.

Figure C.7 Region surrounding the D. C. Cook nuclear plant.

In 1990, 1252 permanent plant staff were on-site at D. C. Cook. (Additional contract workers have been on-site during outages, but they are not included because their presence at the plant was temporary.) Based on the residential settlement pattern of D. C. Cook's 1978 work force, it was estimated that 10.6 percent (133) of the permanent work force in 1990 resided in Bridgman/Lake Township (NUREG/CR-2749, vol. 4, pp. 88-89). Also based on previous plant operating experience, it was estimated that 54 percent (72) of those residing in Bridgman/Lake Township in 1990 were previous residents who obtained jobs and that 46 percent (61) were workers who migrated into the area for jobs. Following the pattern set during plant operations, it was estimated that 60 percent of the in-migrants (37) were accompanied by their families (Table C.23). Using the 1990 Michigan average family size of 3.16 persons, this represented a total in-migration of 141 new residents for Bridgman/Lake Township. Based on the ratio of nonplant to plant jobs created in 1978, D. C. Cook's 1990 operations created an additional 424 indirect jobs in industries supported by the spending of D. C. Cook workers. Approximately 15 of these indirect jobs were filled by current residents of Bridgman/Lake Township; no additional in-migration resulted from indirect employment. In all, approximately 141 new residents moved into Bridgman/Lake Township as a result of D. C. Cook's 1990 operations (Table C.23). These new residents make up about 3.0 percent of the communities' 1990 population of 4627 (NUREG/CR-2749, vol. 4, p. 88 -115).

The larger jurisdiction of Berrien County has experienced proportionally less population growth as a result of the D. C. Cook plant. In 1972, D. C. Cook personnel and their families who migrated to the county to work at the plant and others who moved into the area to work in jobs generated by the plant's presence totalled approximately 2193 persons, representing only 1.3 percent of the county's population. In 1990, based on the residential pattern of D. C. Cook's 1978 work force, it was estimated that 80 percent (1002) of the permanent plant staff of 1252 resided in Berrien County (NUREG/CR-2749, vol. 4, pp. 88-89). Also based on previous plant operating experience, it was estimated that 54 percent (541) of those residing in Berrien County in 1990 were prior residents who obtained jobs and that 46 percent (461) were workers who migrated into the area for jobs. Also following the pattern set during plant operations, about 60 percent of the in-migrants (277) were accompanied by their families. Assuming the 1990 Michigan average family

size of 3.16 persons, this represents a total in-migration of 1059 new residents for Berrien County (Table C.24). Based on the ratio of nonplant to plant jobs created in 1978, D. C. Cook's 1990 operations created an additional 424 indirect jobs. As a result of these indirect jobs, an estimated 22 additional workers and their families (a total of 50 persons) moved into the county. In all, approximately 1109 new residents moved into Berrien County as a result of D. C. Cook's 1990 operations (Table C.24). These new residents made up about 0.7 percent of the county's 1990 population of 161,378 (NUREG/CR-2749, vol. 4, pp. 88-115).

C.4.2.1.2 Predicted Growth Resulting from License Renewal

As discussed in Section C.3.1, D. C. Cook's license renewal would require the completion of a number of refurbishment tasks for Units 1 and 2. Many of the refurbishment tasks are expected to be completed during scheduled refueling outages at each unit during the 10 years that precede the expiration of the initial operating license. However, the final refurbishment work is expected to be completed during one large refurbishment outage scheduled for each unit in the year before the unit's initial operating license expires. Because the final refurbishment outage would involve more workers on-site over a longer period of time than any of the preceding refueling outages, it represents the peak refurbishment period. For other assumptions concerning the refurbishment work force, refer to Section C.3.1 and Section C.4.1.1.2.

Given the refurbishment schedule previously described and in Section C.3.1, the peak refurbishment year for D. C. Cook Unit 1 is expected to be 2014, and the peak refurbishment year for D. C. Cook Unit 2 is expected to be 2017. For each unit, the on-site refurbishment work force would be about the same size, and the work force would be on-site for approximately the same period of time (Section C.4.1.1.2 for other work force assumptions). However, because there are uncertainties concerning the length of the outage and the size of the work force required to complete the refurbishment of a given unit, this section examines a bounding case work force scenario as described in Section C.3.1.

Given the work force scenario detailed in Section C.3.1, it is estimated that 2273 workers would be on-site to complete refurbishment of D. C. Cook Unit 1 in 2014 and D. C. Cook Unit 2 in 2017 (SEA 1994). Further, assuming that the residential distribution of refurbishment workers would be similar to that of the 1972 D. C. Cook construction work force, it is estimated that 66 percent (1500) would reside in Berrien County and that 5.4 percent (123) would reside in Bridgman/Lake Township (NUREG/CR-2749, vol. 4, pp. 69, 80). Based on plant construction experience, it is estimated that 44.7 percent (534) of those residing in Berrien County would be prior residents who obtain refurbishment jobs and 55.3 percent (830) would be workers who migrate into the area for refurbishment jobs (Table C.25). Also following the pattern set during plant construction, half of the in-migrants (415) would be accompanied by families. Using an average family size of 3.16 persons, total refurbishment worker in-migration would result in 1726 new residents for Berrien County (of whom 141 would reside in Bridgman/Lake Township) (Tables C.25 and C.26). Based on the ratio of nonplant jobs created in Berrien County in 1972, D. C. Cook's refurbishment is projected to create an additional 832 indirect jobs in service industries supported by the spending of refurbishment workers. As a result of these indirect jobs, an estimated 43 additional workers and their families (a total of 99 persons) would be projected to move into Berrien County (Table C.25). In all, approximately 1825 new residents would be expected to move into Berrien County and 141 new residents into Bridgman/Lake Township (Table C.26) as a result of D. C. Cook's refurbishment under the bounding case work force scenario. That would represent 1.0 percent of Berrien County's projected population of 186,626 in 2015 and 3.1 percent of Bridgman/Lake Township's projected population of 4548 in 2015 (NUREG/CR-2749, vol. 4, pp. 69-109).

Once plant refurbishment is completed for D. C. Cook Units 1 and 2, the work force would consist mostly of permanent plant staff. Additional refurbishment/refueling workers would be temporarily on-site approximately every 2 years, but they would not be permanent, on-site plant staff, and many of them are expected to commute from outside the study area. It is expected that a maximum of 60 additional permanent workers per unit would be required during the license renewal term, adding 120 workers to D. C. Cook's existing work force (NUREG-1398). Assuming that the new workers' residential distribution would be the same as that of current staff, approximately 80 percent (96) would reside in Berrien County, of whom 13 would reside in Bridgman/Lake Township (NUREG/CR-2749, vol. 4, pp. 88-89). Based on worker in-migration in 1978, it is expected that 54 percent (52) of those residing in Berrien County would be

prior residents who obtain operations jobs and that 46 percent (44) would be workers who migrate into the area for jobs (Table C.27). Also following the pattern set during plant operations, 60 percent of the in-migrants (26) would be accompanied by their families. Using an average family size of 3.16 people, total in-migration would result in 100 new residents for Berrien County (of whom 15 would reside in Bridgman/Lake Township) (Tables C.27 and C.28). Based on the ratio of nonplant jobs created in Berrien County in 1978, D. C. Cook's continued operation is projected to create an additional 41 indirect jobs in service industries supported by the spending of plant workers. As a result of these indirect jobs, an estimated two additional workers and their families (a total of about four persons) would be projected to move into Berrien County (Table C.27). In all, approximately 104 new residents would be expected to migrate into Berrien County as a result of D. C. Cook's license renewal term, 15 of whom would live in Bridgman/Lake Township (Table C.28). That would represent less than 0.1 percent of Berrien County's projected population of 186,626 in 2015 and 0.3 percent of Bridgman/Lake Township's population of 4548 in 2015 (NUREG/CR-2749, pp. vol. 4, 88-113).

C.4.2.2 Housing

The following sections examine the housing impacts that occurred in Bridgman, Lake Township, and Berrien County during construction and operation of D. C. Cook Nuclear Plant and predict housing impacts that would result from refurbishment activities and continued operation. Possible impacts to housing include changes in the number of housing units, particularly the rate of growth of the housing stock; changes in occupancy rates; changes in the characteristics of the housing stock; and changes in rental rates or property values.

Section C.4.1.2 includes a complete discussion of methodology and assumptions used to predict housing impacts.

C.4.2.2.1 Impacts from Plant Construction and Operation

The following discussion begins with a description of the housing market at the time of D. C. Cook's construction and details project-related housing demand in the study area. A discussion follows of changes that occurred in the housing market and impacts on housing induced by plant construction. Finally, impacts from the operation of D. C. Cook on local housing are assessed.

During plant construction, 1969 through 1978, 10,073 new housing units were built in Berrien County (based on the number of permits issued), approximately 1090 of which were subsidized housing units (NUREG/CR-2749, vol. 4). Of these new units, 320 were in Bridgman and 146 were in Lake Township. This represents a 16.9 percent increase in the 1970 housing stock. For comparison, in the 1960s and 1950s, respectively, 11,720 and 11,165 housing units were constructed in Berrien County (NUREG/CR-2749, vol. 4). Fewer new housing units were added to the housing stock during the construction period than in the two previous decades.

Project-related demand for housing in Berrien County and the study area has been estimated according to the number of plant construction workers who moved to the area (NUREG/CR-2749, vol. 4). In 1972, project-related work force peaked at 2377, while commensurate housing demand peaked at 902 and 81 units, respectively, in Berrien County and the study area. Housing starts during 1969, 1970, and 1971 were over 3000 (2510 excluding subsidized units) for Berrien County and 87 for the study area. Vacancy rates in Berrien County, of units either for sale or for rent, were 2.2 percent in 1960, 2.8 percent in 1970, and 10.3 percent in 1975. Homeowner vacancy rates went from 1.3 percent in 1970 to 1.4 percent in 1974, whereas rental vacancy rates fell from 7.1 percent in 1970 to 5.6 percent in 1974. (The discrepancy between 1974 and 1975 vacancy rates is consistent with a decline in project-related demand for housing.) This demonstrates that the housing stock was expanding faster than project-related demand.

During the project construction period, a substantial number of multifamily units were built in Bridgman and Berrien County. There were 230 multifamily units built in Bridgman in the period from 1969 through 1978--70 percent of all units constructed. In Berrien County, 4460, or 44.3 percent, of all units constructed during this period were multifamily units. This contrasts with 1970 census figures that report that 21.3 percent of the year-round units in Bridgman and 18.7 percent of the year-round units in Berrien County were multifamily units. Lake Township did not experience a great increase in the number of multiunit structures. The in-migration of project-related workers either induced or accelerated

the construction of apartment buildings. Another source of housing during the plant construction period was mobile homes. However, local ordinances of Bridgman and Lake Township prohibited the establishment of mobile home parks. Because of poor land drainage, septic tanks required large areas of land. However, in the neighboring Baroda and Lincoln Townships, mobile home parks were built or expanded and accommodated many project-related residents.

Property values have changed little as a result of the D. C. Cook plant. Between 1970 and 1980, comparable increases in the median value of houses occurred in Berrien County and the state of Michigan (U.S. Bureau of the Census 1978, 1988). The median value of houses in Bridgman increased 146 percent between 1970 and 1980, whereas the value increased 126 percent and 122 percent in Berrien County and Michigan, respectively. Property values in the study area have increased more because of the public water and sewer system and because of high prices paid by seasonal residents for lakefront property than because of the plant's presence. During construction of the D. C. Cook plant, the Bridgman area had a lower average selling price for residential units than did the neighboring areas of St. Joseph and Lincoln Township (NUREG/CR-2749, vol. 4). Rental rates increased between 1970 and 1980 by 126 percent in Bridgman and by 154 percent in Michigan (U.S. Bureau of the Census 1972, 1982).

In summary, peak project-related demand for housing in the study area and Berrien County and Bridgman/Lake Township was 6.6 percent and 1.8 percent, respectively, above the existing 1970 housing stock. This demand may have brought on or hastened construction of apartments in the area and increased the occupancy rates of short-term rental units, but the large pool of available housing within the county meant there was little or no impact on property and rental values.

C.4.2.2.2 Predicted Impacts of License Renewal

Project-related population increase and the commensurate housing demand would bring about the new housing-related impacts during refurbishment activities. A summary of recent and anticipated growth in housing is provided. This is followed by predictions of possible impacts during refurbishment and the license renewal term.

Between 1980 and 1990, the number of housing units in Berrien County increased 1.1 percent (U.S. Bureau of the Census 1988, 1990). If this growth rate remains constant, there may be about 71,500 housing units in Berrien County in 2014.

Population projections for Berrien County in 2015 estimate a county population of 186,626. Based on the average household size of 2.6 persons (U.S. Bureau of the Census 1990), this is the equivalent of 71,779 households. Although adjustment in housing growth will be made according to population growth, the current rate of growth suggests that housing availability will be limited in the study area during refurbishment activities.

According to the estimate of the number of workers required for plant refurbishment and based on plant construction experience, 830 workers of the projected work force of 2273 are expected to migrate to Berrien County for refurbishment jobs; 68 of these would locate in Bridgman/Lake Township. Of these in-migrants, 415 are expected to be accompanied by families. Some doubling-up is expected to occur among the 415 unaccompanied workers, so that each unaccompanied mover would require 0.85 housing unit. In-migration of these workers to Berrien County would result in a total refurbishment-related housing demand in the peak year of refurbishment of 768 housing units. In addition, numerous indirect jobs are expected to result from the spending of refurbishment workers. An additional 43 workers are projected to move to Berrien County, bringing the total project-related housing demand in the peak year of refurbishment to 811 units.

Refurbishment-related housing demand is less than the original construction-related housing demand of 902 units, and the number of housing units in Berrien County will have increased about 25 percent between peak construction and refurbishment periods. Refurbishment-related housing demand would account for 1.1 percent of the possible 71,500 housing units in the study area in 2014. However, based on the current housing growth rate there remains the possibility that availability will only slightly exceed non- refurbishment-related housing demand. Therefore, even a 1.1 percent increase in demand may result in moderate impacts to housing during refurbishment. If the growth rate

accelerates only slightly to 2 percent per 10 years (a very low rate compared to state and national averages), sufficient housing should be available in Berrien County, and only small impacts would occur.

Housing impacts related to housing value and marketability that would occur during the license renewal term are the same as those that have occurred during current plant operation (Section C.4.2.2.1). As during current operations, housing values would not be affected in the license renewal term. The 120 additional operations workers (60 per unit) required during the license renewal term and the commensurate housing demand would cause only small new housing impacts.

C.4.2.3 Taxes

C.4.2.3.1 Impacts from Plant Construction and Operation

The D. C. Cook plant had an important effect on taxes during construction and operation. As the state equalized value (SEV) of the D. C. Cook plant increased during construction, it became the predominant source of funds in Lake Township and the Bridgman Public School District. It also became the largest single SEV property for Berrien County.

The jurisdictions that tax the D. C. Cook Nuclear Plant are the state of Michigan, Berrien County, Lake Township, and the Bridgman Public School District. Although the city of Bridgman does not tax the D. C. Cook plant, it is within the Bridgman Public School District, so the total property tax bill of city residents is affected by the school district. The revenues for Berrien County shown in Table C.29 have been adjusted by the GNP implicit price index to 1988 dollars so that amounts can be compared without being distorted by inflation. Data are included for 1967, the year before plant construction; 1972, the peak year of construction; 1978, the first year in which both units were operating; and 1988, the most recent year for which data are available. Note that from 1967 until 1988, the price index changed by greater than a factor of 3.

Table C.30 presents the assessed valuation of the D. C. Cook plant as a percentage of the total assessed valuation of each taxing jurisdiction. Note that D. C. Cook's contribution to the local tax base increased rapidly during construction. D. C. Cook's share of the total assessed value of the three local tax jurisdictions has continued to increase since commercial operation began.

The large assessed value of D. C. Cook resulted in two effects on local government--lower tax burdens and better public services. These effects were limited, primarily occurring within Lake Township and the Bridgman School District but to a lesser extent in Berrien County. Because the value of the nuclear plant and equipment was so large relative to the total assessed value, property tax rates yielded very high revenues per resident in these taxing jurisdictions. This resulted in millage rates much lower than otherwise required for the level of services provided. For instance, the Bridgman School District levies about one-fourth of average property tax rate (millage) for all Michigan school districts. At the same time, its expenditures are about twice the Michigan average per pupil ($7000 vs $3500). Average teacher salaries are considerably higher than the state average, and the school district has built a swimming pool, an unusual occurrence for a school district that has only 850 pupils for grades kindergarten through 12. Lake Township has a more limited ability to levy property tax. However, it does have its own water supply and participates in a sewer system. These services are unusual for a township and can be attributed to the large value of the D. C. Cook plant. The levies for sewer and water systems would be 10 times as high without D. C. Cook in the tax base.

In both Lake Township and the Bridgman School District, revenues from property tax increased as a source of total revenues from about 50 percent before construction began on D. C. Cook to more than 90 percent. There was a large real increase in the total revenues. Bridgman School District revenues increased by more than four times, going from approximately $1.2 million in 1967, to $4.2 million in 1978, to $5.5 million in 1988. Lake Township revenues increased from about $137,000 in 1968 to $1.4 million in 1978 (NUREG/CR-2749, vol. 4) and $3.2 million in 1989.

Berrien County revenues from property taxes have doubled between 1967 and 1988. However, much less of this increase can be attributed to D. C. Cook than in the case of Lake Township and Bridgman School District. Property taxes as a percentage of total revenues have fluctuated considerably in Berrien County (Table C.29).

The total current property tax millage levied on D. C. Cook is slightly over 24 mills. D. C. Cook's contribution to taxes is most important within the school district, which levies about 8.4 mills on the SEV. Berrien County levies about 5.4 mills for its general fund. No other levy is more than 3 mills. Table C.31 presents the most recent millage rates that apply to D. C. Cook's most recent SEV of $532 million and the revenues provided by D. C. Cook to various county and subcounty jurisdictions. D. C. Cook provided 14 percent of Berrien County's $20.3 million revenues in 1989, 88 percent of Lake Township's $3.2 million revenues, and 81 percent of the Bridgman School District's $5.5 million revenues.

In general, the Bridgman School District and Lake Township are quite dependent on revenues from the D. C. Cook plant. The school district has low tax rates and excellent facilities as a result of the plant. It receives almost no aid from the state of Michigan because of its high valuation per pupil. Lake Township receives much higher than average property tax revenues per resident. As a result, it can provide more and better township services, including water and sewer services.

Revenues from D. C. Cook have had a noticeable impact for Berrien County and a significant impact for the school district and Lake Township, which have a much smaller total tax base and much smaller populations.

C.4.2.3.2 Predicted Impacts of License Renewal

The new tax-related impact expected to occur during refurbishment of D. C. Cook results from capital improvements undertaken during the current term outages. The assessed value of the plant would increase during this time, thus increasing D. C. Cook's tax payments to local jurisdictions. This new impact does not involve capital improvements that take place7 during the final refurbishment outage and that would be reflected in the plant's assessed value during the license renewal term. The magnitude of the new impact depends on which improvements would occur at D. C. Cook early on and which would be done during the final outage. For example, if the steam generator is replaced during a current term outage, the assessed value may increase considerably before the license renewal term begins. If steam generator replacement and other major capital improvements are not undertaken early on, the increase in assessed valuation may be only minor. The increase, in either case, is expected to cause only an small to moderate new tax impact.

During the license renewal term, the tax-related impact primarily would be the continuation of tax payments D. C. Cook is currently making to local jurisdictions. D. C. Cook currently provides 14 percent of Berrien County's revenues, 86 percent of Lake Township's, and 80 percent of Bridgman School District's. A new impact would also result from the increase in tax payments because of improvements made at D. C. Cook during the final refurbishment period. Thus, tax revenues would increase in absolute terms but may remain constant or increase as a percentage of total revenues of the taxing jurisdictions. The assessed valuation may continue to increase slightly throughout the license renewal term because it is based partly on replacement costs. Based on current conditions, D. C. Cook tax revenues--the continuing and additional payments combined--are expected to continue to make up a large share of the total revenues in the smaller taxing jurisdictions of Lake Township and Bridgman School District and a noticeable share of revenue in Berrien County. During the license renewal term, tax-related impacts would continue to be large in Lake Township and Bridgman School District.

C.4.2.4 Public Services

C.4.2.4.1 Impacts from Plant Construction and Operation

Before the construction of the D. C. Cook plant, the majority of public services in the study area were provided by Berrien County. Lake Township and the city of Bridgman, which provided some limited services, have benefitted most

from the D. C. Cook plant because of the amount and distribution of the plant's property tax payments. For example, per capita public service expenditures nearly doubled between 1967 and 1978. Since operations at D. C. Cook began, existing facilities have been upgraded in the area and new ones have been built.

Because Berrien County and the city of Bridgman do not receive direct property tax benefits from the plant, they have not realized the same positive economic impacts as Lake Township and the Bridgman School District. Information pertaining to expenditures is discussed in detail in Section C.4.2.3.

Education

The D. C. Cook plant's construction labor force had only a minor impact on enrollment in the Bridgman School District, as total enrollment increased from 774 in 1968 to 788 in 1972, the year of peak construction. Annual enrollment continued to increase for several years during construction and operations. However, the total enrollment increase of 114 students from 1968 to 1978 indicates that the plant's construction and operations work forces have not affected the demand for educational services in the Bridgman School District (NUREG/CR-2749, vol. 4, p. 161).

The D. C. Cook plant has had a positive impact on the availability of funds for educational services and facilities in the school district. Before the construction of the D. C. Cook plant, approximately 40 percent of the district's revenues came from state funding; by 1978, state funds made up only 3.6 percent of the district's revenues. Currently, the state of Michigan does not contribute funds to the Bridgman School District because the district's expenditure per student is $7000, twice the average for the state (NUREG/CR-2749, vol. 4, pp. 163-164). Funds from the D. C. Cook plant's tax contributions allowed the construction of school facilities and a swimming pool, an increase in per student expenditures, and a reduction in the student-staff ratio from 19 to 1 in 1969 to 9 to 1 in 1978 (NUREG/CR-2749, vol. 4, p. 164).

Local officials mentioned the quality of the Bridgman School District's curriculum and facilities as a source of community pride and a factor that has attracted home buyers.

Transportation

Transportation has been affected by the D. C. Cook plant in varying ways. During construction, the increase in traffic was substantial, as it has been with operations. The most heavily affected areas were county roads in the vicinity of the plant. Most of the problem was alleviated by installing a traffic light at the intersection of the plant's access road and Red Arrow Highway. Traffic has also been affected moderately in Bridgman, but impacts have not caused increases in the demand for city road maintenance.

Bridgman, which does not collect revenues directly from the plant, made improvements in its road system between 1968 and 1978, but it did so with monies from the state motor vehicle highway fund, not from revenues of the D. C. Cook plant (NUREG/CR-2749, vol. 4, p. 167). Berrien County's Road Commission is responsible for the maintenance of county roads and contracts to provide road maintenance and repair for Lake Township. The county also contracts with the city of Bridgman to maintain its portion of the Red Arrow Highway. Local highway officials "thought that the construction and operation of the project did not have a substantial effect" on highway maintenance or repair in Berrien County, although the increased traffic was substantial (NUREG/CR-2749, vol. 4, p. 166).

In Lake Township, however, some major road improvements have been undertaken. Plant-related revenues helped finance the upgrades (NUREG/CR-2749, vol. 4, p. 167), which were made even though the D. C. Cook plant did not create additional needs in terms of road maintenance. These improvements amount to a positive economic impact of the D. C. Cook plant.

Public Safety

Construction, operations, and refurbishments at the D. C. Cook plant have had insignificant impacts on the demand for public safety. However, the fiscal impacts on public safety have been positive. Police, fire, and rescue units in the area all grew and improved after the plant's construction began (NUREG/CR-2749, vol. 4, pp. 170-171).

When construction began, the Berrien County Sheriff's Department contracted to provide police protection for Lake Township. During D. C. Cook's construction, Lake Township worked with Baroda Township to create a joint police department with three officers and one elected constable. However, this increase was not related to any increased demand for police services caused by the plant, and no taxes from D. C. Cook were specifically marked for police services. Like the Lake/Baroda Department, the county sheriff's department's services have not been affected by the plant's presence, as no changes in demand have been attributed to the D. C. Cook project.

Similarly, in Bridgman the plant did not affect demand for services or availability of revenues related to the expansion. Between 1967 and 1978, the Bridgman Police Department expanded from one part-time and one full-time officer to four full-time officers. In addition, the police department began to offer 24-hour service in 1977.

Bridgman's expenditures for fire and ambulance services doubled (in constant 1972 dollars) between 1967 and 1978. By 1978, the Bridgman Fire Department was manned by 16 part-time firefighters. The city also participated with Lake Township and the city of Baroda in providing emergency rescue service. Similarly, the property tax contributions from the D. C. Cook plant probably provided for a great percentage of the cost of upgrading the emergency rescue service operated jointly by Bridgman, Baroda, and Lake Township. Other than the participation of members of the Bridgman Fire Department in training at the D. C. Cook plant, there is no indication that the plant's presence has affected the demand for or provision of the city of Bridgman Fire Department or emergency rescue services.

By the time D. C. Cook was completed in 1978, the Lake Township Fire Department was manned by 17 part-time firefighters. The township had just purchased two new fire trucks, upgraded the fire department's communications system, and installed hydrants throughout the township. Although the additional funds Lake Township derived from the D. C. Cook plant helped fund its purchases for fire-fighting improvements, the actual impact of the plant is not clear because it would be impossible to accurately measure the plant's influence.

The D. C. Cook plant's construction and operations have had no effects on demand or the availability of funds for civil defense and emergency preparedness in Berrien County.

Social Services

During construction and operations, the Berrien County Department of Social Services administered social programs in the study area. Because no property tax revenue was allocated for this department, there was no notable impact on social services during either the construction or operation periods because of increased tax revenues (NUREG/CR-2749, vol. 4, pp. 172). Also, no impacts were reported from project-related personnel.

Public Utilities

The director of the County Planning Commission and of the County Department of Public Works reported that the construction and operations of the D. C. Cook plant have had no direct effect on the county's public services. Tax revenues have supported the provision of a number of services and amenities, however. These include the township's water and sewer system and copper-roofed Township Hall.

In the late 1960s, the township had no water system, so residents relied on individual wells. The local geology also created problems in terms of quality, quantity, and location of water. A system was in demand. This desire was strengthened in 1969 when a large firm expressed interest in locating a plant in Bridgman or Lake Township but indicated that its location decision was dependent on the availability of public water (NUREG/CR-2749, vol. 4, p. 173).

Lake Township has now installed an $8.5 million water system, financing it through a bond issue. Although the water system was not built because of added demands created by the D. C. Cook plant or its employees, the availability of

property tax revenues from the plant "made feasible the financing of the project" (NUREG/CR-2749, vol. 4, p. 173). The Lake Township supervisor confirmed this, stating that if the plant had not been located there, public water or sewers would have been unavailable in the township (Wasko 1990). This substantially improved the availability of a public service but had relatively low costs to the average resident of the township (NUREG/CR-2749, vol. 4, p. 173).

The D. C. Cook plant continues to have positive effects on the township. The Lake Township supervisor reported that the township recently made a $4.5 million expansion to the water plant. The township sold bonds to finance the expansion and will repay the debt with revenue earned from selling surplus water to neighboring jurisdictions. He also stated that the D. C. Cook plant's presence did not require an expansion but that extra millage from the plant enabled the township to expand the system and sell water. The upgrade has increased the plant's output from 7600 to 23,000 m3 (2 million to 6 million gallons) of water per day (Wasko 1990).

Recreation and Tourism

The construction and operation of the D. C. Cook plant have had positive effects on recreation and tourism in Berrien County. The plant is located in an area that attracts tourism because of its natural beauty and proximity to Interstate 94 between Chicago and Detroit. Many tourists visit the D. C. Cook plant's Energy Information Center, which provides information on nuclear energy and technology and offers an auditorium, a canteen, and a picnic pavilion overlooking Lake Michigan. Key information sources indicated that the center is one of the county's top tourist attractions, hosting over 740,000 registered visitors between 1970 and 1979. Some visitors, such as school groups, come from as far away as Chicago and Grand Rapids to visit D. C. Cook's Energy Information Center. But the center is also popular with local area residents, and its auditorium is frequently used for community events such as arts and crafts shows. Key local informants agreed that the D. C. Cook plant has had positive impacts on tourism and recreation in Berrien County (NUREG/CR-2749, vol. 4, p. 28).

C.4.2.4.2 Predicted Impacts of License Renewal

Based on the estimated 2273 direct workers required during peak refurbishment, the staff estimated that 415 direct workers and 26 indirect workers will migrate with their families to Berrien County (Section C.4.2.1.2). The number of children accompanying these workers is estimated using the Michigan average family size (3.16) and assuming that all families include two adults. Children are expected to be evenly distributed in age from ?1 to 18 years. Assuming 72.2 percent of these children are school age (5 to 18 years), there will be an average of 0.84 school-age children per in-migrating family, or a total of 370 new students in Berrien County. This represents a 1.0 percent increase above the projected number of school-age children in Berrien County in 2015 (assuming the 1990 age distribution of the population). This slight increase will result only in small impacts to education.

During the construction of D. C. Cook, there were insignificant increases in demands for social services, public utilities, and public safety. Because refurbishment would bring in fewer people (1825) than the initial construction (2193) and the population in the study area in 2015 would be larger, any impacts on these public services would be small.

The fact that the Lake Township/Bridgman area will be better able to provide public service for future population growth reflects one of the D. C. Cook plant's indirect impacts on public service in the study area. In the past, the Lake Township/Bridgman area has been able to expand and upgrade its public service programs and facilities because of the plant's contribution to the jurisdictions' property tax base. This would continue with license renewal, and the overall economic benefits the Lake Township/Bridgman area would accrue with the plant's continued operations. This could change, however, if Michigan state laws were revised to require distribution of taxes on the plant throughout the entire state.

Transportation experienced small to moderate impacts during the construction of D. C. Cook. The refurbishment work force would be less than it was during construction, leading toward smaller impacts, but a continuation of impacts

associated with past operations coupled with the additional refurbishment-induced impacts could create moderate future impacts.

Based on past operations, impacts of future operations on public services are expected to be small except for transportation impacts, which would range from small to moderate. The positive small impacts to recreation and tourism will continue.

C.4.2.5 Off-Site Land Use

This section describes the off-site land-use impacts of the construction, operation, and license renewal of the D. C. Cook Nuclear Plant. The discussion of impacts is primarily concerned with land use in the immediate vicinity of the plant, but impacts for the remainder of Berrien County are described where appropriate. Land-use impacts are examined for two time periods. First, Section C.4.2.5.1 identifies the land-use impacts of D. C. Cook's construction and operation. Next, Section C.4.2.5.2 projects the land-use impacts of D. C. Cook's refurbishment period based on the impacts that occurred during the plant's construction. Also, Section C.4.2.5.2 projects the land-use impacts of the plant's license renewal term based on the impacts that have occurred during operations. Information sources for this report include the Final Environmental Statement Related to the Operation of Donald C. Cook Nuclear Plant, Units 1 and 2 (AEC Dockets 50-315 and 50-316); Socioeconomic Impacts of Nuclear Generating Stations: D. C. Cook Case Study (NUREG/CR-2749, vol. 4); and interviews with key information sources in Berrien County. Section C.4.1.5 describes the methods used to assess and project land-use impacts for all case study plants.

C.4.2.5.1 Impacts from Plant Construction and Operation

The 260-ha (650-acre) site upon which the D. C. Cook plant is located includes 1326 m (4350 ft) of beach property on the eastern shore of Lake Michigan near Bridgman. The plant is situated in a waterfront area known for its geologically and ecologically unique wooded sand dunes. At the time construction began in 1968, the D. C. Cook property was bounded by a residential area to the north, the Red Arrow Highway to the east, land that was zoned for agricultural use to the south, and Lake Michigan to the west. The general area in which the plant is located was used primarily as agricultural land, with no large-scale development in the immediate vicinity of the plant site.

The construction of the D. C. Cook plant had an immediate direct impact on shoreline land use in Berrien County. Because the plant site had to be rezoned before construction could begin, it became the first lakeshore property zoned for industrial use within Lake Township. Thus, the construction of the D. C. Cook plant started the industrialization of the previously undeveloped lakefront dune area (AEC Dockets 50-315 and 50-316).

Overall, however, the construction and operation of the D. C. Cook plant have not had significant direct impacts on land use in the plant's immediate vicinity or in Berrien County. Population increases resulting from the plant's construction and operation have been relatively small and have not created significant changes in local land use or residential development patterns. Before the plant's construction, the adjacent lands to the north and south were developing as residential-use areas along the lakeshore, and the plant's construction and operation has neither impeded nor encouraged that development. Residential land-use is well established in the Rosemary Beach area north of the plant, with a combination of new houses and older second-home cottages. In the Livingston Hills and Wildwood Dunes areas south of the plant, residential development has continued throughout D. C. Cook's operations period. Many of the residences south of the plant in Livingston Hills are refurbished second-home cottages, but most of the development in Wildwood Dunes has been made up of new, relatively expensive homes. To the east of the D. C. Cook property, between Red Arrow Highway and Jericho Road, there is a mixture of light industrial and commercial land uses. Much of this land was rezoned from agricultural to industrial in 1984, and a few industries have located there. However, key sources said that the D. C. Cook plant had neither positive nor negative direct impacts in terms of recruiting industrial development to Berrien County. In general, key informants indicated that the land in the immediate vicinity of the D. C. Cook plant had good development potential for residential and light industrial uses and that the plant's presence had only neutral direct impacts on such development.

The D. C. Cook plant has had moderate indirect impacts on land use around the plant and in other parts of Berrien County. Key sources cited Lake Township's 1984 decision to rezone land east of the plant (an area on both sides of Livingston Road, between Jericho Road and Red Arrow Highway) to industrial use as an example. The rezoning was not solely because of the D. C. Cook plant's presence, but the plant was a factor in the decision. Also, because it receives the benefits of the D. C. Cook plant's property tax payments, Lake Township has been able to extend its water and sewer services to almost all parts of the township. According to key informants, the provision of water and sewer services has helped guide residential development in the township. The water and sewer system also has been an impetus to industrial land use, as was the case in siting the Hoover-Ugine plant in Lake Township in the early 1970s. In addition, the Bridgman School District's above-average curriculum and facilities, which would not have been possible without the D. C. Cook plant's tax contributions, are said to have helped encourage residential land use in Lake Township.

C.4.2.5.2 Predicted Impacts of License Renewal

The land-use impacts of the D. C. Cook plant's refurbishment in the immediate vicinity of the plant and in Berrien County are expected to be small. Refurbishment-related population growth is predicted to represent approximately 3.1 percent of Bridgman/Lake Township's projected population in 2015 and approximately 1.0 percent of Berrien County's projected population in 2015. Increases of this size would result in minimal new impacts to land-use and development patterns, especially when compared to those driven by the peak construction-related growth in 1972.

The indirect impacts of D. C. Cook's license renewal term are expected to be greater than the direct impacts of refurbishment. Population growth associated with D. C. Cook's license renewal term is projected to represent only 0.3 percent and less than 0.1 percent of Bridgman/Lake Township's and Berrien County's respective populations in 2015, so new population-driven land-use impacts are expected to be small. However, moderate indirect impacts might continue as a result of the benefits Lake Township and the Bridgman School District receive from the plant's property tax payments. Sewer and water system improvements and expansion, lower property taxes, and improved educational services and facilities are all likely to continue guiding land-use and development patterns in the future, as they have during D. C. Cook's operation thus far.

The D. C. Cook plant's license renewal is not expected to attract or discourage new residential or commercial development directly. Key sources agree that some areas south of the plant, particularly the Wildwood Dunes area, would continue to develop residentially. Certain areas along Jericho Road also are likely to develop as residential-use properties because water and sewer lines are in place and because the area has not been heavily developed. Light industrial development is expected to continue in the area zoned for industrial use just east of the D. C. Cook plant, and continued commercial development is expected along the Red Arrow Highway. As during the D. C. Cook plant's construction and operation, the plant's refurbishment and license renewal are not likely to have large impacts on land use or development.

C.4.2.6 Economic Structure

C.4.2.6.1 Impacts from Plant Construction and Operation

The construction and operation of the D. C. Cook plant have resulted in direct and indirect jobs and income for Berrien County and Bridgman/Lake Township (Table C.32). It is estimated that, in 1972, approximately 137 Bridgman/Lake Township residents were employed directly or indirectly as a result of the project (NUREG/CR-2749, vol. 4). These residents earned an estimated income of $6.3 million (1989 dollars). For all of Berrien County, construction employment represented 2569 jobs and $90 million in income for residents. These figures represented about 8.8 percent of Bridgman/Lake Township's total employment (noticeable impact) and 3.6 percent of Berrien County's total employment (insignificant impact). This income represented 5.3 percent of Berrien County's total income. (Note: No data exist on total income for Bridgman/Lake Township.)

In 1978, the plant created an estimated 90 jobs for Bridgman/Lake Township residents and 854 for Berrien County residents. This represented about 4.7 percent of total employment in Bridgman/Lake Township and 1.1 percent of total employment in Berrien County, resulting in insignificant impacts to both areas. In 1978, income from the plant was about $24 million for Berrien County, or 1.4 percent of total income (NUREG/CR-2749, vol. 4).

The income and employment reported in Table C.32 were directly linked to the construction and operation of the D. C. Cook plant. Employment includes (1) persons who already lived in Bridgman/Lake Township or Berrien County and who were hired to work at the plant and (2) persons who moved into the area to gain employment. Additional income and jobs were generated through wages and salaries, as employees spent part of their incomes in Berrien County.

C.4.2.6.2 Predicted Impacts of License Renewal

The impacts of refurbishment and license renewal are expected to be similar in type to the impacts of initial construction and operation. Employment generated by the D. C. Cook plant after license renewal would, for the most part, represent a continuation of the levels generated before refurbishment.

The work force scenario detailed in Section C.3.1 was used to estimate the employment effects of refurbishment at D. C. Cook. Table C.33 shows the total direct and indirect plant-related employment of residents in Bridgman/Lake Township and Berrien County during refurbishment. Rows 4 and 6 of Table C.33 give the percentage of employment and income, respectively, for Bridgman/Lake Township (column 1) and Berrien County (column 2).

It is projected that D. C. Cook would employ 1500 county residents as refurbishment workers in 2014 (Section C.4.2.1.2). Indirect employment that would result from purchases of goods and services during refurbishment is projected to create 790 additional jobs for Berrien County residents.

The total direct and indirect employment affecting Berrien County during the peak refurbishment year is therefore projected to be 2290. This employment is projected to be 3.3 percent of the total Berrien County work force in 2014, resulting in small impacts.

There would be a moderate employment impact on the Bridgman/Lake Township area assuming the refurbishment work force scenario. The projected number of Bridgman/Lake Township residents employed in plant-related jobs in 2014 is 152. Of these workers, 123 would be conducting refurbishment activities and 23 would be in indirect jobs created by refurbishment. It is estimated that this would represent 7.5 percent of the employment generated in the Bridgman/Lake Township area.

Relatively few new plant-related jobs would be created at D. C. Cook during the license renewal term. Nearly all plant-related employment (and associated impacts) expected during that time period would represent a continuation of employment (and impacts) from past operations. Table C.34 shows the impact of the increased labor requirements at D. C. Cook after 2014.

The license renewal term work force for D. C. Cook would require an estimated 120 additional employees (Section C.4.2.1.2). Of these additional employees, 96 are projected to be Berrien County residents. An estimated 41 indirect jobs would also be created because of the license renewal term, and 39 of the jobs are expected to be filled by Berrien County residents. With the continued effects of the plant's current employment and the additional employment to be created, total direct and indirect license renewal term employment is estimated to represent 1.8 percent of Berrien County employment in 2014. This would result in small impacts.

A greater impact would be felt by the Bridgman/Lake Township area because of license renewal term employment, as 13 of the 120 additional plant staff are projected to reside there. It is also estimated that one indirect job would be created in the area by the additional personnel. Total direct and indirect license renewal term employment in Bridgman/Lake Township is expected to represent 8.1 percent of total employment, resulting in moderate impacts.

C.4.2.7 Historic and Aesthetic Resources

This section describes the impacts that the construction and operation of the D. C. Cook Nuclear Plant have had on historic and aesthetic resources and projects the expected impacts of the plant's refurbishment and post-relicensing operations. Information sources include the Final Environmental Statement Related to Operation of Donald C. Cook Nuclear Plant, Units 1 and 2 (AEC Dockets 50-315 and 50-316) and interviews with key information sources in Berrien County, Michigan.

C.4.2.7.1 Impacts from Plant Construction and Operation

The construction and operation of the D. C. Cook power plant have had insignificant impacts on historic resources in Berrien County. In the early 1970s, the state of Michigan liaison officer for historic preservation determined that "the construction of the station will not result in an adverse impact on the historic and archaeological resources of the state other than what may have occurred during the already completed construction work" (AEC Dockets 50-315 and 50-316, pp. II-24). The 1973 Final Environmental Statement concluded that the construction work had no impact on historical or archaeological resources and projected that the plant's operation also would have no impacts. Key local respondents agreed that the construction and operation of the D. C. Cook plant have not affected historic resources in Berrien County.

The D. C. Cook plant's construction and operation have also had insignificant impacts on aesthetic resources in Berrien County, although the impacts have been slightly more pronounced than those on historic resources. Because of the natural beauty of the lakefront area's geologically and ecologically distinctive wooded sand dunes, the D. C. Cook plant was designed with aesthetic compatibility as a high priority. In addition, the power plant was constructed among trees and high sand dunes so that it could not be seen from adjacent properties, and all of the plant's buildings (except for the reactor containment buildings) were painted to blend with the natural landscape. Key sources indicated that the plant is visible from Lake Michigan, but that it is not visible from Interstate 94 or from adjacent properties. The informants added that they had rarely heard anyone mention the plant in terms of its physical appearance, and that the impacts of its visual presence were neutral. Because of its remote siting and because the D. C. Cook station was designed and constructed to blend with the natural environment to the maximum extent possible, its aesthetic impacts have been minimal.

C.4.2.7.2 Predicted Impacts of License Renewal

The impacts of the D. C. Cook plant's refurbishment and post-relicensing operation on historic and aesthetic resources in Berrien County would likely be less pronounced than those that have occurred during construction and would be a continuation of the minor impacts from current operations. As in the past, the plant, which is not highly visible and is not near any historic sites, likely would have only small impacts. However, a determination of potential impacts to historic resources must be made through consultation with the SHPO.

C.4.3 Diablo Canyon

The impact area--those places where the most pronounced socioeconomic impacts might result from refurbishment and license renewal--for Diablo Canyon consists of San Luis Obispo County, California. Emphasis is placed on those jurisdictions within the county closest to the plant site, where many workers reside. These include Avila Beach, Pismo Beach, and the city of San Luis Obispo. The selection of this area is based on worker residence patterns, employment, expenditures, and tax payments relative to the surrounding region. Figure C.8 depicts the impact area, and Figure C.9 shows the region where it is located.

Figure C.8 Socioeconomic impact area associated with Diablo Canyon refurbishment: San Luis Obispo County.

C.4.3.1 Population

This section discusses the local population growth associated with the construction, operation, and license renewal of the Diablo Canyon Nuclear Generating Station. Section C.4.1 describes the methodology used to project population growth for all plants. Data used to prepare this section were obtained from Socioeconomic Impacts of Nuclear Generating Stations: Diablo Canyon Case Study (NUREG/CR-2749, vol. 5); Environmental Assessment Proposed Rule for Nuclear Plant License Renewal (NUREG-1398); SEA refurbishment work force estimates (Appendix B; SEA 1994); population projections by the California Department of Finance (Demographic Research Unit); and the Pacific Gas and Electric Company (PG&E;).

The discussion of population growth is organized into two time periods. Section C.4.3.1.1 identifies the population growth that San Luis Obispo County experienced as a result of the construction and operation of Diablo Canyon from 1969 to 1990. Section C.4.3.1.2 projects the population growth that is expected to result from Diablo Canyon's refurbishment period and license renewal term operations beginning in 2024 (Unit 1) based on the growth associated with the plant's initial construction. Also, Section C.4.3.1.2 projects the population growth expected to result from Diablo Canyon's license renewal term based on the growth associated with operations in the past.

C.4.3.1.1 Growth Resulting from Plant Construction and Operation

Diablo Canyon's construction resulted in noticeable population increases in San Luis Obispo County (Table C.35). During the peak construction year, 1975, Diablo Canyon personnel and their families who migrated to the area to work at the plant and others who moved into the area to work in jobs generated by the plant's presence totalled approximately 3308 persons. This influx of new residents represented 2.6 percent of San Luis Obispo County's total population in 1975 (NUREG/CR-2749, vol. 5, p. 89).

Operations at the Diablo Canyon plant have resulted in smaller population increases than did the plant's construction. In 1990, 1300 permanent plant staff were on-site at Diablo Canyon (additional contract workers were on-site during an outage, but these workers have not been included because their presence at the plant was temporary). Of the permanent work force, approximately 89.2 percent (1160) reside in San Luis Obispo County (PG&E; 1990). Because Diablo Canyon is located in a relatively rural area, based on residential settlement patterns of the plant's 1975 work force, it is estimated that approximately 30 percent (348) of those residing in San Luis Obispo County in 1990 were prior residents who obtained jobs and that 70 percent (812) were workers who migrated into the area for jobs. Based on experience during operations at other nuclear plants, it is estimated that approximately 66 percent of the 1990 in-migrants (536) were accompanied by their families. Assuming the 1990 California household size of 3.32 persons, this represents a total in-migration of 2056 new residents for the county (Table C.36). Based on work force in-migration and the ratio of nonplant jobs created at other nuclear plants during operating periods, Diablo Canyon's 1990 operations created an additional 832 indirect jobs in service industries supported by the spending of Diablo Canyon workers. As a result of these indirect jobs, an estimated 37 additional workers and their families (a total of 93 persons) moved into San Luis Obispo County (Table C.36). In all, approximately 2149 new residents moved into San Luis Obispo County as a result of Diablo Canyon's 1990 operations. These new residents made up about 1.0 percent of San Luis Obispo County's 1990 population of 217,162 (U.S. Bureau of the Census 1990).

Figure C.9 Region surrounding the Diablo Canyon nuclear plant.

C.4.3.1.2 Predicted Growth Resulting from License Renewal

As discussed in Section C.3.1, Diablo Canyon's license renewal would require the completion of a number of refurbishment tasks for Units 1 and 2. Many of the refurbishment tasks are expected to be completed during scheduled refueling outages at each unit during the 10 years that precede the expiration of the initial operating license. However, the final refurbishment work is expected to be completed during one large refurbishment outage scheduled for each unit in the year before the unit's initial operating license expires. Because the final refurbishment outage would involve more workers on-site over a longer period of time than any of the preceding refueling outages, it represents the peak

refurbishment period. For other assumptions concerning the refurbishment work force, refer to Section C.3.1 and Section C.4.1.1.2.

Assuming the refurbishment schedule as described in Section C.3.1, the peak refurbishment year for Diablo Canyon Unit 1 is expected to be 2023, and the peak refurbishment year for Unit 2 is expected to be 2024. For each unit, the on-site refurbishment work force would be about the same size, and the work force would be on-site for approximately the same period of time (refer to Section C.4.1.1.2 for other work force assumptions). However, because uncertainties exist concerning the length of the outage and the size of the work force required to complete the refurbishment of a given unit, this section examines a bounding case work force scenario as described in Section C.3.1.

Given the work force scenario detailed in Section C.3.1, it is estimated that 2273 workers would be on-site to complete refurbishment of Diablo Canyon Unit 1 in 2023 and Unit 2 in 2024 (SEA 1994). Further assuming that the residential distribution of refurbishment workers would be similar to that of the 1975 Diablo Canyon construction work force, it is estimated that 85 percent (1932) would reside in San Luis Obispo County. Based on plant-construction experience, it is projected that 531 (27.5 percent) of those residing in San Luis Obispo County would be prior residents who obtain refurbishment jobs and that 1401 (72.5 percent) would be workers who migrate into the area for refurbishment jobs (Table C.37). Also following the pattern set during plant construction, 61.7 percent of the in-migrants (864) would be accompanied by families. Using the California average family size of 3.32 persons, total refurbishment worker in-migration would result in 3405 new residents for the county. Based on the ratio of nonplant jobs created in San Luis Obispo County in 1975, Diablo Canyon's refurbishment is projected to create an additional 1455 indirect jobs in service industries supported by the spending of refurbishment workers. As a result of these indirect jobs, an estimated 68 additional workers and their families (a total of 226 persons) would be projected to move into San Luis Obispo County (Table C.37). In all, approximately 3631 new residents would be expected to move into San Luis Obispo County as a result of Diablo Canyon's refurbishment under the work force scenario. That would represent 0.8 percent of San Luis Obispo County's projected population of 445,180 in 2024 (NUREG/CR-2749, vol. 5, pp. 55-85).

Once plant refurbishment is completed for Diablo Canyon Units 1 and 2, the work force would consist mostly of permanent plant staff. Additional refurbishment/refueling workers would be temporarily on-site approximately every 2 years; however, they would not be permanent, on-site plant staff, and many of them are expected to commute from outside the study area. It is expected that a maximum of 60 additional permanent workers per unit would be required during the license renewal term, adding 120 workers to Diablo Canyon's existing work force. Assuming that the new workers' residential distribution would be the same as current workers', approximately 89.2 percent (107) would reside in San Luis Obispo County. Based on worker in-migration at nuclear plants in comparable locales and construction experience at Diablo Canyon, it is estimated that 32 (30 percent) of those residing in San Luis Obispo County would be prior residents who obtain jobs and that 75 (70 percent) would be workers who migrate into the area for jobs (Table C.38). Also, following the pattern set by personnel in-migrating to work at other nuclear plants, 66 percent of the in-migrants (50) would be accompanied by their families. Using the California average family size of 3.32 people, total in-migration would result in 191 new residents for the county. Based on work force in-migration and the ratio of nonplant jobs created at other nuclear plants during operating periods, Diablo Canyon's license renewal term is projected to create an additional 77 indirect jobs in service industries supported by the spending of plant workers. As a result of these indirect jobs, an estimated three additional workers and their families (a total of about eight persons) would be projected to move into San Luis Obispo County (Table C.38). In all, approximately 199 new residents would be expected to move into San Luis Obispo County as a result of Diablo Canyon's license renewal term. That would represent less than 0.1 percent of San Luis Obispo County's projected population in 2024.

C.4.3.2 Housing

The following sections examine the housing impacts that occurred in San Luis Obispo County during construction and operation of Diablo Canyon and predict housing impacts that would result from refurbishment activities and continued operation. Possible impacts to housing include changes in the number of housing units, particularly the rate of growth

of the housing stock; changes in occupancy rates; changes in the characteristics of the housing stock; and changes in rental rates or property values.

Section C.4.1.2 includes a complete discussion of the methodology and assumptions used to predict housing impacts.

C.4.3.2.1 Impacts from Plant Construction and Operation

The following discussion begins with a description of the housing market at the time of Diablo Canyon's construction and details project-related housing demand in the study area. A discussion of changes that occurred in the housing market and impacts on housing induced by plant construction follows.

Construction at Diablo Canyon began in 1969 and continued through 1980. During this time, approximately 29,000 year-round units were added to San Luis Obispo's housing stock (U.S. Bureau of the Census 1982; NUREG/CR-2749, vol. 5), bringing the total number of year-round units in San Luis Obispo to 66,070. The new units represent very rapid growth, a full 77 percent increase in the 1970 housing stock. This rate of growth compares to a 32 percent increase in California between 1970 and 1980 (U.S. Bureau of the Census 1972, 1982) and a 28 percent increase in housing units in San Luis Obispo County during the intercensal 1960-1970 period (U.S. Bureau of the Census 1967, 1972). Areas within the county that experienced the greatest growth were the Baywood/Los Osos, area with a 167.6 percent increase in housing units between 1970 and 1978; Nipomo, with a 74.4 percent increase; Atascadero (and the surrounding area), with a 65.8 percent increase; and Arroyo Grande, with a 64.8 percent increase (NUREG/CR-2749, vol. 5). The 40.5 percent increase in housing units in the city of San Luis Obispo was relatively low during this period; however, the 4183 housing units added there represent the greatest increase in absolute number.

Several factors influenced this housing growth commensurate to the increase in population in the county. One factor was the expanding student population associated with California State Polytechnic University in the city of San Luis Obispo. During the 1970s, enrollment increased by more than 4000 students (Cass 1969, 1979). The need for housing suitable for the student population at least partly explains why both the percentage of rental units in the city of San Luis Obispo and the percentage of multifamily units increased between 1970 and 1980, from 37.9 to 46.5 percent and from 49.2 to 53.5 percent, respectively. The county, particularly the coastal communities, was also developing as a retirement community and popular tourist area. These factors, combined with the in-migration of Diablo Canyon construction workers, were the causes for the rapid growth that occurred in San Luis Obispo County.

Project-related housing demand in San Luis Obispo County peaked in 1975 at 1297 units when the construction work force was 2116 (NUREG/CR-2749, vol. 5). New housing units added to San Luis Obispo County housing stock between 1970 and 1975 totalled 9898 (NUREG/CR-2749, vol. 5). Based on a average of 2.7 persons per household (U.S. Bureau of the Census 1972), these new units could accommodate approximately 26,725 persons. The non-project -related population increase through 1975 was approximately 23,500 [derived by subtracting project-related population increase from 1976 population (NUREG/CR-2749, vol. 5)], requiring approximately 8703 housing units. The remaining 1195 new housing units are approximately 100 units less than the project-related demand for 1297. In 1970, 1040 housing units were vacant in San Luis Obispo County. These vacancies might have supplied the 100 units required for project-related demand not supplied by new construction. Nonetheless, the growing population and project -related demand resulted in a vacancy rate of approximately 2.5 percent.

Because of the limited availability of housing in the area, occupancy density increased, particularly in the Five Cities area of San Luis Obispo County, where approximately 48 percent of the construction workers resided (NUREG/CR-2749, vol. 5). The small hotels in the Five Cities area were filled with construction workers (Morrow 1990), as were most recreational vehicle parks. The combined pressures of increased population resulted in occasions when people slept in cars or lived in parks. Housing conversions that resulted from combined housing demand included garages that were rented as apartments and the rental of privately owned seasonal homes (NUREG/CR-2749, vol. 5).

Both the median value of owner-occupied units and the median contract rent increased dramatically during the construction of the Diablo Canyon plant. Between 1970 and 1980, median value and median rent increased 329 percent

and 181 percent, respectively, in San Luis Obispo County. For comparison, in the state of California, median value and median rent increased 266 percent and 124 percent. Some local realtors and planners indicated that the demand for rental units associated with plant construction did have an effect on rental rates, but in the city of San Luis Obispo, the presence of Section 8 (government-subsidized) and non-Section 8 renters in the same properties kept rental rates from soaring even higher. Local realtors and developers attribute the increase in housing values, like rental rates, to the combined population pressures of construction contractors and in-migrating retirees and workers from Southern California to this popular rural beach area.

The housing market did not experience a sudden drop when construction at Diablo Canyon was completed. Construction declined gradually, and some workers sought other jobs in the area. Also, non-project-related growth continued in San Luis Obispo County. However, the departure of construction workers allowed rental vacancies to increase to 4-5 percent, and rental rate increases slowed.

The operation of Diablo Canyon has had little effect on housing in San Luis Obispo County. Residential development closest to the plant is in the unincorporated Avila Beach, approximately 8 km (5 miles) away. Neither housing values nor quality have been affected by the proximity of Diablo Canyon.

In summary, project-related population increase and commensurate housing demand accounted for only 12 percent of the total increase in population between 1970 and 1975. However, it appears that at times during construction, demand for housing (particularly reasonably priced housing) exceeded availability. Also, rental rates and housing values increased 63 percent and 57 percent more, respectively, than in the state of California during the same time. The contribution of project-related demand to the net effect on housing was great enough to have been a causal factor in these impacts.

C.4.3.2.2 Predicted Impacts of License Renewal

Project-related population increase and the commensurate housing demand would bring about new housing impacts during refurbishment activities. A summary of recent and anticipated growth in housing is provided. This is followed by predictions of possible impacts during refurbishment and the license renewal term.

If housing in San Luis Obispo County continues to expand at the 1980-90 rate of 35.1 percent (U.S. Bureau of the Census 1982, 1990), then it is possible that by 2023, when the operating license of Unit 1 expires, there would be about 246,000 housing units in San Luis Obispo County. This greatly exceeds the 175,960 units that will be required in 2025, based on population projections and average household size (U.S. Bureau of the Census 1990; Section C.4.3.1). However, it is conceivable that the growth rate could be cut by half or more as a result of growth-control measures enacted partly because of severe water shortages. If this is the case, the number of housing units in the county in 2023 will be 154,250, far short of those necessary to accommodate the projected population in 2023. Thus, housing availability would be very limited, and competition for existing housing would be greatly increased.

This slower growth rate is a reasonable assumption because local governments are concerned with recent rapid growth and have taken steps to address this. Local community leaders named growth (i.e., a too-rapid rate of growth and associated water shortages) as the issue currently causing greatest concern. Communities throughout San Luis Obispo County are acting to slow the rate of growth that has occurred in past years. Arroyo Grande is now aiming for an annual growth rate of 2.5 percent, down from the previous annual rate of 5 percent. Morro Bay has enacted a "no-growth measure" that allows only 77 housing starts per year if adequate water is available. As of June 1990, because water was not available, no new housing starts had been allowed since the beginning of the calendar year. The comprehensive plan of the city of San Luis Obispo suggests a growth rate of 1 percent or less per year. Pismo Beach has grown so fast that an override of Proposition 13 spending limits was required to provide basic fire and protection services. Also, there is a countywide moratorium on development that will remain in effect until two initiatives limiting countywide growth are deliberated and enacted by the county board of supervisors. These growth-control measures could easily prevent the continuation of the 1980-90 growth rate of 35.1 percent.

According to the estimate of the number of workers required for plant refurbishment and based on plant construction experience, 1401 workers of the total work force of 2273 are expected to migrate to San Luis Obispo County for refurbishment jobs. Of these in-migrants, 864 are expected to be accompanied by families. Some doubling-up (sharing of living accommodations) is expected to occur among the 537 unaccompanied workers, so that each unaccompanied mover would require 0.85 housing unit. In-migration of these workers to San Luis Obispo County would result in refurbishment-related housing demand in the peak year of refurbishment of 1320 housing units. In addition, numerous indirect jobs are expected to result from the spending of project workers. An additional 68 workers are projected to move into San Luis Obispo County, bringing the total project-related demand for housing to 1388 units.

Refurbishment-related housing demand is greater than the original construction-related housing demand of 1297 units, but the number of housing units in the study area may have increased by as much as 415 percent--or, in a slower growth scenario, by 223 percent--between peak construction and refurbishment periods. Refurbishment-related housing demand would account for between 0.56 and 0.9 percent of the possible number of units in the study area of 2023, compared to construction-related demand in 1975, accounting for 2.7 percent of the housing units. Demand would be small relative to the existing housing market. In the absence of growth-control measures, impacts to housing are expected to be small. However, project-related housing demand in the presence of growth-control measures that limit housing development may exacerbate an already competitive housing market, particularly for reasonably priced housing. Increased demand may increase rental rates and housing values and seriously reduce the already limited housing availability. Housing conversions, such as making apartments out of a single-family home or converting garages to apartments, may occur if allowed under the growth-control restrictions. It is thus possible that moderate--possibly even large--new housing impacts could occur.

Housing impacts related to housing value and marketability that would occur during the license renewal term are the same as those currently being experienced (Section C.4.3.2.1). The 120 additional workers (60 per unit) required during the license renewal term and the commensurate housing demand would cause only small housing impacts.

C.4.3.3 Taxes

C.4.3.3.1 Impacts from Plant Construction and Operation

PG&E; pays taxes on the Diablo Canyon plant primarily to taxing authorities in San Luis Obispo County; only a relatively small amount of sales and use taxes have been paid to the state of California.

In California, the State Board of Equalization assesses public utility property. In most other states, this function is carried out by local county assessors. The State Board of Equalization currently allocates the utility system's assessed value among county tax code areas weighing three indices. A reproduction cost net less depreciation allocation procedure is used to determine the value of the facility and property. Cost estimates of the Diablo Canyon plant and all other facilities owned by PG&E; are estimated on a yearly basis. The utility is required to report any construction or refurbishment of the facilities annually to the State Board of Equalization. These improvements add to the assessed valuation of the plant. In addition, utility income reported for the plant and common stock indices are used as weights to arrive at a final assessed valuation by the state. The local tax rate is then applied to the utility's assessed value within each tax code area to determine tax liability.

Before California's tax reform of 1978, an assessment ratio of 25 percent was applied to an estimate of the market value of the facility to obtain the assessed value, upon which ad valorem taxes are levied. Because of the passage of Proposition 13 in 1978, the taxable portion of the assessed value has risen to 100 percent, and the levy of a single tax rate of $4 per $100 of assessed valuation was applied to all property. Also, largely because of Proposition 13, the county's basic tax rate has declined from a high of 3.33 percent in 1972 to 1.07 percent in 1989. Table C.39 provides the San Luis Obispo County basic tax rate from 1967 to 1989, the estimated basic property tax levy, and total county general revenues. In addition, property tax as a percentage of the total county general revenues is shown in the last column. The county property tax levy had increased at a 10.2 percent annual rate from 1967 to 1968 and from 1977 to 1978. From 1977 to 1978 and from 1988 to 1989, the property tax levy increased at an 8.8 percent annual rate. Property

taxes currently make up 36.0 percent of the county's total revenues. Diablo Canyon's property taxes provide 10.6 percent of San Luis Obispo County's total revenues.

Approximately 12 taxing authorities within San Luis Obispo County are included within the distribution of property tax payments by the Diablo Canyon plant. The recipients of the largest tax payments were the San Luis Obispo Coastal Unified School District and San Luis Obispo County. Table C.40 presents the distribution of property tax payments to the major taxing authorities in San Luis Obispo County. Total property taxes paid by the Diablo Canyon plant were approximately $6.3 million in 1974-75, $12.4 million in 1977-78, and $34.1 million in 1988-89. Proportional distribution of Diablo Canyon's total tax payment has varied during this time period. Currently, San Luis Obispo County and the San Luis Coastal Unified School District receive 36.1 percent and 38.9 percent, respectively, of the total tax payment. The Diablo Canyon property tax payments, adjusted in real terms by the GNP implicit price deflator, have substantially increased during the 1974-75 to 1988-89 time period. The property tax payments paid by Diablo Canyon have increased in real terms by 7.32 percent annually from 1974-75 to 1988-89. This annual rate of increase slowed to 4.66 percent from the 1977-78 period to 1990.

The San Luis Coastal Unified School District has relied heavily on property taxes as a major portion of its income. Table C.41 gives the amounts of local property tax income and total school district income for the school district between 1969 and 1989. From 1969 to 1970 through 1988-89 the percentage of total school district income that came from property taxes rose from 75.9 to 80.1 percent. The share of total local revenues provided by the Diablo Canyon plant have increased over time, from 31.1 percent in 1977-78 to 38.9 percent in 1988-89.

C.4.3.3.2 Predicted Impacts of License Renewal

During refurbishment of Diablo Canyon, a new tax-related impact is expected to occur. This new impact involves increases in tax payments that would result from capital improvements that take place during the current term outages. Tax increases resulting from improvements made in the final refurbishment outage would affect taxes only during the license renewal term. The magnitude of the impact depends on PG&E;'s decision about which improvements would occur early on and which would be done during the final outage. For example, if the steam generator is replaced during a current term outage, the assessed value may increase considerably before the license renewal term begins. If steam generator replacement, and other major capital improvements, are not undertaken early on, the increase in assessed valuation may be only minor. The increase, in either case, is expected to cause only a small to moderate new tax impact.

During the license renewal term, the primary tax-related impact would be the continuation of tax payments that Diablo Canyon is currently making to San Luis Obispo County and San Luis Coastal Unified School District. There would also be a new impact resulting from the increase in tax payments because of improvements made at Diablo Canyon during the final refurbishment period. Thus, tax revenues would increase in absolute terms, although they may not provide a proportionally larger share of the total revenues of either taxing jurisdiction. Based on current conditions, Diablo Canyon tax revenues--the continuing and additional payments combined--are expected to continue to make up a substantial share of the total revenues. The large tax-related impact currently being experienced in the school district and the moderate impact occurring in the county would continue during the license renewal term.

C.4.3.4 Public Services

C.4.3.4.1 Impacts from Plant Construction and Operation

For public services, the study area consists of the municipalities of Pismo Beach, Arroyo Grande, Grover City, San Luis Obispo City, and San Luis Obispo County. The governments in these municipalities are mostly of the city council/administrative officer type (NUREG/CR-2749, vol. 5, p. 103). This area has experienced rapid population growth, primarily because of being located between the large cities of Los Angeles and San Francisco. The period of construction and operations of the Diablo Canyon Nuclear Plant was characterized by political conflict, not only because of the plant but also because of the allocation of the increased revenues from the plant (NUREG/CR-2749, vol.

5, p. 103). County planning commissions were also very active during the 1970s. The major public services that are most responsive to public demand are education, public safety, and transportation. These services received the most impact from the construction and operation of the Diablo Canyon Nuclear Plant.

Education

Public education in San Luis Obispo County is provided by the San Luis Coastal Unified School District. Funding for public education comes from federal, state, and local sources, with the local property tax being the largest source of funding. During the construction phase, the major educational impacts of the Diablo Canyon plant were concentrated on two public school districts--the San Luis Coastal Unified School District and the Lucia Mar Unified School District (NUREG/CR-2749, vol. 5, p. 112).

While Diablo Canyon Nuclear Plant is situated in the San Luis Coastal Unified School District, impacts from the plant affected two school districts. In the San Luis Coastal Unified School District, the impact was related to the large tax revenues generated by the facility. In the Lucia Mar Unified School District, the impact occurred in relation to the influx of school-age children accompanying Diablo Canyon construction workers (NUREG/CR-2749, vol. 5, p. 112).

The Lucia Mar Unified School District was at overcapacity during the peak construction period and was forced to add portable classrooms to accommodate the additional student population. Funding was an impact that had a positive effect on the San Luis Coastal Unified School District while creating a negative impact on the Lucia Mar Unified School District. This inequity in funding resulted because new school districts were established shortly before the final siting decision on Diablo Canyon was made. Several factors were considered before the districts were created. Estimates of wealth, or assessed valuation, were based on the plant being sited in the Lucia Mar school district. However, the plant was built in the San Luis school district. Therefore, Lucia Mar gained additional students without the additional revenues from the construction that went to the San Luis school district (NUREG/CR-2749, vol. 5, p. 113).

Local officials indicated that many construction workers moved into the area for short periods with no major impact. Currently, a change is occurring in the schools. The emphasis continues to be on academics, but a need is growing for a vocational/technical curriculum.

Transportation

The major roads in the study area that provide access to the Diablo Canyon Nuclear Plant are State Highway 101, Avila Road, and San Luis Bay Drive. The county maintains all county-designated roads, while California Transportation (CalTrans) supports all state roads. Any city-designated roads are maintained by the municipality in which they are located (NUREG/CR-2749, vol. 5, p. 115).

During peak construction, over 2000 workers were employed at the site. To accommodate additional traffic, San Luis Obispo County made several improvements to Avila Road and San Luis Bay Drive. PG&E; aided in the funding of these improvements (NUREG/CR-2749, vol. 5, p. 116).

Local officials gave no indication of any major problems stemming from the construction or operation of the Diablo Canyon Nuclear Plant.

Public Safety

Public safety expenditures remained constant from 1967 to 1973 and then rose by 6 percent from 1973 to 1978. The municipalities within the study area provide police protection within their boundaries. Police protection in the rural areas is provided by the county sheriff and the California Highway Patrol. Diablo Canyon projects' tax contributions enabled the expansion of public safety services (NUREG/CR-2749, vol. 5, p. 116).

The California Department of Forestry is located in San Luis Obispo County regional office. The San Luis Obispo County contracts with the Department of Forestry for local fire protection (NUREG/CR-2749, vol. 5, p. 116). The majority of fire departments for the other municipalities in the study area are a combination of volunteer and paid full-time people. There is a countywide emergency management plan, and each municipality also has its own plan. Local officials contacted gave no indication of any problems arising about public safety during either construction or operation of the plant.

Social Services

Social services are provided by the counties in the study area. Local officials stated that a whole range of services was provided from homeless shelters to "Meals on Wheels" for the elderly. One municipality has a senior citizens' advisory committee that works with the city council and assists in making decisions for the seniors in its jurisdiction.

Public Utilities

Public utilities are provided in a variety of combinations in the county. The county provides some services, and there are special districts with privately provided services. In the majority of municipalities, sewer and water are provided by the municipality itself. One local official interviewed indicated that water availability was a problem. Currently, the county is trying to implement a water conservation program. Local offices indicated that it is hard to specify which services were specifically affected by the construction and operation of the plant and that it was a major difficulty to absorb some of the changes.

Tourism and Recreation

Local leaders indicated that no adverse impacts resulted from the construction or operation of the Diablo Canyon Nuclear Plant. Some officials indicated that during the construction phase it was a "site to see": "I would have to say it has had a positive effect on the tourism draw." The director of recreation in Grover City stated that PG&E; is very supportive of recreational groups. Arroyo Grande has a standard of approximately 1.6 ha (4 acres) per 1000 residents and would like to keep that standard even if continued growth occurs.

C.4.3.4.2 Predicted Impacts of License Renewal

Based on the estimated 2273 direct workers required during peak refurbishment, the staff estimates that 864 direct workers and 68 indirect workers will migrate with their families to San Luis Obispo County (Section C.4.3.1.2). The number of children accompanying these workers is estimated using the California average family size (3.32) and assuming that all families include two adults. Children are expected to be evenly distributed in age from ?1 to 18 years. Assuming 72.2 percent of these children are school age (5 to 18 years), there will be an average of 0.95 school-age children per in- migrating family, or a total of 885 new students in San Luis Obispo County. This represents a 0.1 percent increase above the projected number of school-age children in San Luis Obispo County in 2015 (assuming the 1990 age distribution of the population). This slight increase will result in only small impacts to education.

During the construction phase, improvements were made to several roads leading to the plant. An additional increase of 2273 direct workers and 3631 new residents during refurbishment should have a small impact on traffic flow on a road system currently accommodating over 200,000 residents. Likewise, refurbishment-related population increases should have little or no impact on other public services, such as social services, public safety, tourism, and recreation.

A water supply shortage has plagued all of southern California in the recent past. In San Luis Obispo County sufficient processing capacity exists, but severely limited water availability has resulted in water-use restrictions and has contributed to the enactment of growth control measures. The water supply shortage began after the construction and early operations phase of Diablo Canyon; therefore, the effect of a plant-related increase in population is unknown. An increase in water demand resulting from an additional 3600 persons might, however, result in moderate impacts to public water availability. Absent this water supply shortage, only small impacts to public utilities will result.

Based on past operations information, impacts of license renewal term operations to most public services are likely to be small. The projected operations-related population increase is small (200 persons) and will result in extremely small increase in demand for public services. The public water supply, however, may be moderately affected during refueling activities in the license renewal term if the water supply shortage continues.

C.4.3.5 Off-Site Land Use

This section describes the off-site land-use impacts of the construction, operation, and license renewal of the Diablo Canyon Nuclear Generating Station. The discussion of impacts is primarily concerned with land use in the immediate vicinity of the plant, but impacts for the remainder of San Luis Obispo County are described where appropriate. Land-use impacts are examined for two time periods. First, Section C.4.3.5.1 identifies the land-use impacts of Diablo Canyon's construction and operation. Next, Section C.4.3.5.2 projects the land-use impacts of Diablo Canyon's refurbishment period based on the impacts that occurred during the plant's construction. Also, Section C.4.3.5.2 projects the land-use impacts of the plant's license renewal term based on the impacts that have occurred during operations. Information sources for this report include the Final Environmental Statement Related to the Nuclear Generating Station Diablo Canyon, Units 1 and 2 (AEC Dockets 50-275 and 50-323); Socioeconomic Impacts of Nuclear Generating Stations: Diablo Canyon Case Study (NUREG/CR-2749, vol. 5); and interviews with key information sources in San Luis Obispo County. Section C.4.1.5 describes the methods used to assess and project land-use impacts for all case study plants.

C.4.3.5.1 Impacts from Plant Construction and Operation

Diablo Canyon was constructed on a 300-ha (750-acre) site on the California coast. In 1968, when plant construction began, the area in the immediate vicinity of the site was very remote and almost wholly undeveloped. The nearest development was in Avila Beach, a small residential area about 11 km (7 miles) southwest of the plant. The property upon which the plant was built had previously been part of the Marré Ranch, and the land had been idle or used for cattle grazing for several years. Close to the ocean, the site's terrain was made up of very rugged shoreline areas with steep, rocky slopes unsuitable for development. The property had been rezoned to commercial and recreational use in 1962, but there was no residential, industrial, commercial, or recreational land use on the site when excavation began (AEC Dockets 50-275 and 50-323).

The construction and operation of Diablo Canyon have not had significant impacts on land use in the plant's immediate vicinity. Diablo Canyon was constructed on part of a 2800-ha (7000-acre) private ranch in a very remote, rugged section of San Luis Obispo County. This meant that there were very few existing land uses to impact in the immediate vicinity and that the area was relatively free from heavy development pressures because of a lack of roads and utilities. The area surrounding the plant is still very rural and undeveloped, and primary land uses are still agriculture and livestock grazing. Local sources indicated that it was not Diablo Canyon's presence but the remoteness and inaccessibility of the area that had restricted further development (NUREG/CR-2749, vol. 5, pp. 181-182).

In developed areas near Diablo Canyon, such as the communities of Avila Beach and Pismo Beach, the plant's land-use impacts also have been minimal. Since the early 1980s, both Avila Beach and Pismo Beach have grown as resort areas with relatively expensive housing, condominium, and hotel/motel development brought about by the region's expanding tourist industry. San Luis Bay Estates, a 480-ha (1200-acre) complex located in Avila Beach about 10 km (6 miles) from Diablo Canyon, represents part of this growth. When completed, San Luis Bay Estates will include a hotel and cottages with 225 rooms, about 800 homes, and a golf course. Another residential development, comprising about 1000 ha (2500 acres), 100 homes, and a golf course, is being planned for the Pecho Ranch property adjoining San Luis Bay Estates. Some of the homes in the new Pecho Ranch complex will be within 6.5 km (4 miles) of Diablo Canyon, the closest residential development to the plant thus far. Sources indicated that the plant's presence had neither encouraged nor impeded residential or commercial development of this type. In general, Diablo Canyon's overall land-use impacts have been neutral in both Avila Beach and Pismo Beach.

Despite some negative housing impacts from worker in-migration during the plant's construction (peak construction-related growth constituted about 2.6 percent of the county's population), Diablo Canyon has had relatively minor effects on land use in San Luis Obispo County as a whole. One reason for this is Diablo Canyon's extremely remote location. Also, sources felt that the county's residential, commercial, and industrial development patterns were much more susceptible to influences other than Diablo Canyon's presence. Some of the more important determinants of the county's land-use and development patterns were said to include the presence of the University of California at San Luis Obispo and the need to provide student housing; the beauty of the area's beaches coupled with growth in the regional tourist industry; the limited availability of developable land, particularly in urban areas; the local implementation of slow-growth policies; the limited availability of an adequate water supply; and development pressures resulting from the in-migration of residents from Los Angeles and San Francisco. In general, both the direct and indirect land-use impacts of Diablo Canyon's construction and operation have been neutral for the county as a whole. C.4.3.5.2 Predicted Impacts of License Renewal

The direct and indirect land-use impacts of Diablo Canyon's refurbishment and license renewal term are expected to be small for the area in the plant's immediate vicinity and for San Luis Obispo County as a whole. Land use in the immediate vicinity of the plant is expected to remain unchanged, with agriculture and livestock grazing being the primary uses. Because of its remoteness and lack of public services, the area is expected to remain undeveloped indefinitely.

Although San Luis Obispo County might experience some housing shortages during the refurbishment period, large-scale residential development is not anticipated as a result of Diablo Canyon's license renewal. Refurbishment-related population growth is projected to be approximately 0.8 percent of the county's projected 2024 population. The population growth projected to result from Diablo Canyon's license renewal term is even smaller, less than 0.1 percent of the county's projected 2024 population. Because increases this small are not likely to create a significant housing demand, the plant's impact on residential development in San Luis Obispo County is expected to remain neutral or be minimal. Future residential, commercial, and industrial development patterns will be increasingly influenced by some of the factors that help dictate the county's land-use patterns now. The most important factors are likely to be the availability of developable land, the enforcement of slow- or no-growth policies, the availability of an adequate water supply, and the continued in-migration of residents from Los Angeles and San Francisco. Tourism- and resort-related residential and commercial development is expected to continue in Avila Beach and Pismo Beach, with neither positive nor negative impacts from Diablo Canyon. Overall, Diablo Canyon's direct and indirect land-use impacts are expected to be small, as has been the case during construction and operation.

C.4.3.6 Economic Structure

C.4.3.6.1 Impacts from Plant Construction and Operation

The construction and operation of Diablo Canyon have resulted in noticeable and insignificant economic impacts, respectively. Table C.42 gives the estimated employment and expenditure effects of the Diablo Canyon plant for residents of San Luis Obispo County. The employment is the sum of direct basic, indirect basic, other basic, and nonbasic employment as described by Mountain West Research, InC., in Socioeconomic Impacts of Nuclear Generating Stations: Diablo Canyon Case Study (NUREG/CR-2749, vol. 5).

Overall, peak construction period employment in 1975 represented 6.5 percent of San Luis Obispo County's total employment, indicating a noticeable impact. Operating term employment in 1990 is approximately 1300 workers, of whom 1160 are residents of San Luis Obispo County. Total Diablo Canyon-related direct and indirect employment in 1990 is estimated to be 1909, or 1.8 percent of the county's total employment. This represents an insignificant impact.

C.4.3.6.2 Predicted Impacts of License Renewal

The impacts of refurbishment and license renewal are expected to be similar to the type of impacts experienced during initial construction and operation. Employment generated by the Diablo Canyon plant after license renewal would, for the most part, represent a continuation of the levels generated before refurbishment.

The work force scenario detailed in Section C.3.1 was used to estimate the employment effects of refurbishment at Diablo Canyon. Table C.43 shows the total direct and indirect plant-related employment of San Luis Obispo County residents. The methodology used to determine the employment impacts is developed in the Mountain West Research, InC., study for Diablo Canyon (NUREG/CR-2749, vol. 5). It is projected that Diablo Canyon would employ 1932 county residents as refurbishment workers in 2023 (Section C.4.3.1.2). In addition, indirect employment that would result from purchases of goods and services during refurbishment is projected to create 1310 jobs for San Luis Obispo County residents. The total direct and indirect employment affecting San Luis Obispo County during the peak refurbishment year is therefore projected to be 3242. This employment is projected to represent 1.85 percent of total employment in San Luis Obispo County in 2023, resulting in small impacts.

Relatively few new plant-related jobs would be created at Diablo Canyon during the license renewal term. Nearly all plant-related employment (and associated impacts) expected during that time period would represent a continuation of employment (and impacts) from past operations. Table C.44 shows the impact of the increased labor requirements at Diablo Canyon after 2023.

The license renewal term work force for Diablo Canyon would require an estimated 120 additional employees (Section C.4.3.1.2). Of these additional workers, 107 are projected to be San Luis Obispo County residents. An estimated 77 indirect jobs would also be created by the license renewal term, and 69 of the jobs are expected to be filled by San Luis Obispo County residents. With the continued effects of the plant's current employment and the additional employment to be created, total direct and indirect license renewal term employment is projected to represent 1.2 percent of San Luis Obispo County's employment in 2023. The employment figure represents a small impact.

C.4.3.7 Historic and Aesthetic Resources

This section describes the impacts that the construction and operation of the Diablo Canyon Nuclear Generating Station Units 1 and 2 have had on historic and aesthetic resources and projects the expected impacts of the plant's refurbishment and post-relicensing operations. Information sources include the Final Environmental Statement Related to the Nuclear Generating Station Diablo Canyon Units 1 and 2 (AEC Dockets 50-275 and 50-323) and interviews with key informants in San Luis Obispo County and elsewhere in California.

C.4.3.7.1 Impacts from Plant Construction and Operation

The plant's construction and operation have affected no sites on the National Register of Historic Places. During the preconstruction phase, archaeologists hired to survey the site found several prehistoric campsites along Diablo Creek, one dating back 9300 years (the San Luis Obispo 2 site). This was considered an important finding, establishing a new chronology for this area of Central California. Portions of this site have been preserved, but construction of the plant and access road did destroy other sites. The continued operation of the plant has resulted in damage to one of the sites. An evaporation pond sprang a leak and water ran through a site, causing some erosional damage. Another continuing impact on prehistoric resources related to the plant is the continuing loss of land through sloughing off of a bluff near the plant. Although this erosion problem appears to be unrelated to actual construction of the power plant, restricted access because of plant security has prevented other parties from responding to this problem. Conversely, one source said that the fact that the site and its surroundings are owned by the licensee has protected the area and its historic and aesthetic resources from development more effectively than if the site had been under the ownership of private parties.

Aesthetically, the construction and operation of the plant have had an insignificant impact on the surroundings. This is not because of the physical design of the plant [it is not a low-profile facility: the containment structures are 46 m (150 ft) in diameter and 60 m (200 ft) tall, and the turbine building is 43 m (140 ft) tall and 230 m (750 ft) long] but because of its remote location within an extensive private ranch. The only visual access to the plant for the public is from the

Pacific Ocean. The plant cannot be seen even from the private access road until within 1.2 km (0.75 mile) because of the rocky terrain. Along the 19 km (12 miles) of privately held coastline adjacent to the Diablo Canyon site, there is no beach use, swimming, fishing, or beachcombing because of the rocky cliffs and poor accessibility. Hiking, camping, picnicking, and artistic pursuits could be enjoyed on the bluffs above the plant if there were any public access (AEC Dockets 50-275 and 50-323). Erosional scars from the 2400-ha (6000-acre) transmission line right-of-way and its service roads are a source of adverse aesthetic impacts (AEC Dockets 50-275 and 50-323).

C.4.3.7.2 Projected Impacts of License Renewal

The impacts of the Diablo Canyon plant's refurbishment and post-relicensing operation on historic and aesthetic resources in San Luis Obispo County and on the immediate Pacific Coast environs would likely be less pronounced than those that have occurred during construction and operation of the facility. As in the past, the power plant, which is highly visible only from the Pacific Ocean, would likely have only small aesthetic impacts. If the private land holdings that surround the site were to be developed, there could be extensive public visual access to the site, raising the potential for an adverse impact. Such an impact could be reflected in property values not reaching their full potential.

A respondent cautioned that if additional construction or road maintenance were to occur with refurbishment, there could be impacts to the area's prehistoric and historic resources. However, evaluation of potential impacts to historic resources must occur through consultation with the SHPO as mandated by the National Historic Preservation Act (NHPA) of 1966.

C.4.4 Indian Point

The impact area--those places in which the most pronounced socioeconomic impacts might result from refurbishment--for Indian Point consists of Westchester and Dutchess counties. The assessment of land use and public services involves only Westchester County. The selection of this area is based on worker residence patterns, employment, expenditures, and tax payments. Figure C.10 depicts the impact area, and Figure C.11 shows the region in which it is located.

C.4.4.1 Population

This section discusses the local population growth associated with the construction, operation, and license renewal of the Indian Point Nuclear Generating Plant. Section C.4.1 describes the methodology used to project population growth for all plants. Data used to prepare this section were obtained from the Final Environmental Statements Related to the Operation of Indian Point Nuclear Generating Plant, Units 2 and 3 (AEC Dockets 50-247 and 50-286); Environmental Assessment for Proposed Rule on Nuclear Plant License Renewal (NUREG-1398); SEA refurbishment work force estimates (Appendix B; SEA 1994); population projections by the New York Department of Commerce (Division of Economic Research and Statistics) (Krausharr 1990); the Consolidated Edison Company (ConEd) of New York; and the New York Power Authority.

The discussion of population growth is organized into two time periods. Section C.4.4.1.1 identifies the population growth that Dutchess and Westchester counties have experienced as a result of the construction and operation of Indian Point Units 2 and 3 from 1965 to 1990. Section C.4.4.1.2 projects the population growth that is expected to result from Indian Point's refurbishment period and license renewal term operations beginning in 2013 (Unit 2) based on the growth associated with the plant's initial construction. Also, Section C.4.4.1.2 projects the population growth expected to result from Indian Point's license renewal term based on the growth associated with operations in the past.

C.4.4.1.1 Growth Resulting from Plant Construction and Operation

Figure C.10 Socioeconomic impact area associated with Indian Point refurbishment: Westchester and Dutchess counties.

Figure C.11 Region surrounding the Indian Point nuclear plant.

Because Indian Point was not included in the NUREG/CR-2749 study, estimates of worker in-migration are based on the construction experience at other nuclear plants in comparable locales, especially Oconee and Three Mile Island. Indian Point's construction resulted in very small population increases in Dutchess and Westchester counties (Table C.45). During the peak construction period at Unit 2, there were approximately 1200 construction workers on-site (AEC Docket 50-247, p. IV-4). Assuming the same size work force for Unit 3, as many as 2400 workers were on-site while both units were under construction during the early 1970s. Based on construction experience at other nuclear plants with similar locales--i.e., areas with relatively low population density compared to larger urban areas located within a short commuting distance--it is estimated that approximately 17.3 percent (415 persons) of the peak construction period work force lived in Dutchess County and 12.7 percent (305) lived in Westchester County (Tables C.46 and C.47). This distribution reflects current work force distribution at Indian Point (ConEd 1990; PASNY 1990). An estimated 30 percent of the construction work force lived in the study area. It is estimated that 35 percent of the construction workers residing in Dutchess or Westchester counties (252 persons) were workers who migrated to the study area for jobs at the plant (Tables C.46 and C.47). Based on the pattern of construction workers' in-migration at other nuclear projects, it is estimated that 51 percent of the in-migrants (129 workers) were accompanied by their families and that their average household size was 3.25 persons. Together, this represents a total in-migration of 312 residents for Dutchess County and 231 new residents for Westchester County. Based on construction in-migration and the ratio of nonplant jobs created during peak construction periods at nuclear plants in comparable locales, it is estimated that Indian Point's peak construction period created an additional 1560 jobs in service industries supported by the spending of construction workers. As a result of these indirect jobs, an estimated 31 additional workers and their families (a total of 78 persons) moved into each study area county (Tables C.46 and C.47).

In all, approximately 390 new residents moved into Dutchess County and 309 people migrated into Westchester County as a result of Indian Point's peak construction period. These residents made up about 0.2 percent of Dutchess County's 1972 population of 226,673 and about 0.03 percent of Westchester County's 1972 population of 888,691.

Operations at Indian Point have resulted in less population growth than did the plant's construction. In 1990, 1335 permanent plant staff were on-site at Indian Point (additional contract workers have been on-site during outages, but they are not included in this number because their presence at the plant was temporary). Of the permanent work force, 37.8 percent (505) resided in Dutchess County and 27.8 percent (371) resided in Westchester County (ConEd 1990; PASNY 1990). Based on the residential settlement pattern of workers at nuclear plants in comparable locales and on construction experience at Indian Point, it is estimated that 30 percent (263) of the workers residing in Dutchess and Westchester counties in 1990 were persons who migrated to the study area to work at the plant (Tables C.48 and C.49). Also following the pattern set by personnel in-migrating to work at other nuclear plants, it is estimated that 66 percent (174) of the in-migrants were accompanied by their families. Assuming the 1990 New York average family size of 3.22 persons, this represented a total in-migration of 374 new residents for Dutchess County and 275 new residents for Westchester County (Tables C.48 and C.49). Based on work force in-migration and the ratio of plant to nonplant jobs created at other nuclear plants during operating periods, it is estimated that Indian Point's 1990 operations created an additional 868 indirect jobs in service industries supported by the spending of plant workers. As a result of these indirect jobs, an estimated 17 additional workers and their families (a total of 41 persons) moved into each study area county (Tables C.48 and C.49).

In all, approximately 415 new residents moved into Dutchess County, and 316 persons into Westchester County, as a result of Indian Point's 1990 operations. These new residents made up about 0.16 percent of Dutchess County's 1990 population of 259,462 and about 0.04 percent of Westchester County's 1990 population of 874,866.

C.4.4.1.2 Predicted Growth Resulting from License Renewal

As discussed in Section C.3.1, Indian Point's license renewal would require the completion of a number of refurbishment tasks for Units 2 and 3. Many of the refurbishment tasks are expected to be completed during scheduled refueling outages at each unit during the 10 years that precede the expiration of the initial operating license. However, the final refurbishment work is expected to be completed during one large refurbishment outage scheduled for each unit in the year before the unit's initial operating license expires. Because the final refurbishment outage would involve

more workers on-site over a longer period of time than any of the preceding refueling outages, it represents the peak refurbishment period. For other assumptions concerning the refurbishment work force, refer to Sections C.3.1 and C.4.1.1.2.

Assuming the refurbishment schedule as described in Section C.3.1, the peak refurbishment year for Indian Point Unit 2 is expected to be 2012, and the peak refurbishment year for Indian Point Unit 3 is expected to be 2015. For each unit, the on-site refurbishment work force would be about the same size, and the work force would be on-site for approximately the same period of time (refer to Section C.4.1.2 for other work force assumptions). However, because of uncertainties concerning the length of the outage and the size of the work force required to complete the refurbishment of a given unit, this section examines a bounding case work force scenario as described in Section C.3.1.

Given the work force scenario detailed in Section C.3.1, it is estimated that 2273 workers would be on-site to complete refurbishment of Indian Point Unit 2 in 2012 and Unit 3 in 2015 (SEA 1994). Further assuming that the residential distribution of refurbishment workers would be similar to that estimated for the 1972 construction work force, it is estimated that approximately 30 percent (543) would reside in either Dutchess County or Westchester County. Based on the residential distribution of Indian Point plant staff, it is estimated that 17.3 percent (393) would reside in Dutchess County and that 12.7 percent (289) of the total work force would reside in Westchester County (Tables C.50 and C.51). For Indian Point, estimates of refurbishment worker in-migration are based on construction experience at nuclear plants located in areas with similar characteristics to the region in which Indian Point is located. It is estimated that 35 percent (239) of the refurbishment workers living in either Dutchess County or Westchester County would be workers who migrate into the area for jobs at Indian Point. Based on the pattern of construction workers' in-migration at other nuclear projects, 51 percent of the in-migrants (122) would be accompanied by families. Using the New York average family size of 3.22 persons, total refurbishment worker in-migration would be expected to result in 293 new residents for Dutchess County and 216 new residents for Westchester County. Based on construction in-migration and the ratio of nonplant jobs created during peak construction periods at nuclear plants in comparable locales, it is estimated that Indian Point's refurbishment would create an additional 1477 indirect jobs in service industries supported by the spending of refurbishment workers. As a result of these indirect jobs, an estimated 59 additional workers and their families (a total of 148 persons) would be projected to move into the study area. Of these additional in-migrants, 74 would move into each study area county (Tables C.50 and C.51). In all, approximately 367 new residents would be expected to move into Dutchess County and 290 new residents into Westchester County, as a result of Indian Point's refurbishment. That would represent 0.1 percent of Dutchess County's projected population of 310,809 in 2013 and less than 0.1 percent of Westchester County's projected population of 846,861 in 2013.

Once plant refurbishment is completed for Indian Point Units 2 and 3, the work force would consist mostly of permanent plant staff. Additional refurbishment/refueling workers would be temporarily on-site approximately every 2 years; however, they would not be permanent, on-site plant staff, and many of them are expected to commute from outside the study area. It is expected that a maximum of 60 additional permanent workers per unit would be required during the license renewal term, adding 120 workers to Indian Point's existing work force. Assuming that the new workers' residential distribution would be the same as current workers', approximately 37.8 percent (45) would reside in Dutchess County, and 27.8 percent (33) would reside in Westchester County (ConEd 1990; PASNY 1990). Based on operating experience at nuclear plants in comparable locales and on construction experience at Indian Point, it is estimated that 30 percent (23) of the plant staff who would reside in Dutchess County or Westchester County would be persons who migrated to the area to work at Indian Point (Tables C.52 and C.53). Also following the pattern set by personnel in-migrating to work at other nuclear plants, 66 percent of the in-migrants (16) would be accompanied by their families. Using the New York average family size of 3.22 people, total in-migration would be expected to result in 33 new residents for Dutchess County and 26 new residents for Westchester County. Based on work force in-migration and the ratio of nonplant jobs created at other nuclear plants during operating periods, it is estimated that Indian Point's license renewal term would create an additional 78 indirect jobs in service industries supported by the spending of plant workers. As a result of these indirect jobs, an estimated two additional workers (six persons including families) would be projected to move into each study area county (Tables C.52 and C.53). In all, approximately 39 new residents would be expected to move into Dutchess County and 32 new residents into Westchester County, as a result of Indian Point's

license renewal term. That would represent less than 0.1 percent of Dutchess County's projected population and less than 0.1 percent of Westchester County's projected population in 2013.

C.4.4.2 Housing

The following sections (1) examine the housing impacts that occurred in Westchester and Dutchess counties during construction and operation of Indian Point and (2) predict housing impacts that would result from refurbishment activities and continued operation during the license renewal term. Possible impacts to housing include changes in the number of housing units, particularly the rate of growth of the housing stock; changes in occupancy rates; changes in the characteristics of the housing stock; and changes in rental rates and property values.

Section C.4.1.2 includes a complete discussion of the methodology and assumptions used to predict housing impacts.

C.4.4.2.1 Impacts from Plant Construction and Operation

The following discussion begins by describing project-related housing demand in Westchester and Dutchess counties and compares it to the 1970 housing market. Impacts from the operation of Indian Point on local housing are then described. Because Indian Point was not included in the NUREG/CR-2749 study, estimates of worker in-migration are based on the construction experience at other nuclear plants in comparable locales (Section C.4.4.1).

Peak construction work force of 2400 occurred in the early 1970s when both Units 2 and 3 were under construction. Because such a large labor pool existed within reasonable commuting time in the local area and in New York City, very little in-migration occurred. Only 252 project workers moved to Westchester and Dutchess counties combined to work at the site. In Dutchess County, in-migrating workers required 134 housing units, and those who moved to Westchester County required 99 housing units. Indirect jobs created by the spending of project workers brought in another 60 workers to Dutchess County and 44 to Westchester. Thus, the total project-related housing demand was for 194 units in Dutchess County and 143 units in Westchester. Project demand accounted for only 0.28 percent of the year-round housing units in Dutchess County and 0.04 percent of the year-round units in Westchester.

Westchester County in 1970 had over 3000 vacant rental units and 812 units for sale (U.S. Bureau of the Census 1972). Project-related demand would occupy only a fraction of the vacant units. Similarly, 1400 vacant rental units and 517 units were for sale in Dutchess County. Because project-related demand made up only a minuscule portion of the housing markets of both Dutchess and Westchester counties, no discernable change in the housing market or in housing values occurred.

Most local planners and realtors believe that the operation of the Indian Point plants has not inhibited residential growth in neighboring communities of Buchanan, Peekskill, and Verplank, and the town of Cortlandt. Rather, the low property taxes and good school district have served to encourage residential development and facilitate the quick sale of existing housing. Local residents express no reluctance about living near the plants, although occasionally an outside buyer is deterred from the area because of the plants. However, there are always other buyers for the property, so the housing market has not slowed. Conversely, one realtor maintains that more development in communities neighboring Indian Point would have occurred had it not been for Indian Point.

Local realtors agree that housing values in communities neighboring the plant have not been deflated because of the presence of Indian Point. Homes in the immediate area are moderately priced and are currently selling very fast on the market. Developments within 3 km (2 miles) of the plant include homes in the $400,000 to $600,000 range. Representatives of the Westchester County Office of Community Development believe otherwise, however, and indicated that the presence of the plant had perpetuated the image of these communities being low to middle class.

In summary, it appears that neither construction nor operation of the Indian Point plants has considerably affected housing in the communities neighboring the plants or in the whole of Westchester and Dutchess counties.

C.4.4.2.2 Predicted Impacts of License Renewal

Project-related population increase and the commensurate housing demand would be the cause of new housing impacts during refurbishment activities. A summary of recent and anticipated growth in housing is provided. This is followed by predictions of possible impacts during refurbishment and the license renewal term.

Housing in Westchester County expanded between 1980 and 1990 by 6.3 percent (U.S. Bureau of the Census 1990). If expansion continues at this rate, there would be about 419,500 housing units in 2012, the peak year of refurbishment at Indian Point Unit 2. Historical growth trends in Dutchess County suggest that by 2012 there could be about 126,500 housing units (U.S. Bureau of the Census 1988, 1990). The projected populations of Westchester and Dutchess counties in 2012 are 846,861 and 310,809, respectively, and will require approximately 321,000 and 115,500 housing units. Although adjustments in housing growth will be made according to population growth, the current rate of growth suggests that there will be available housing in the study area during refurbishment activities.

According to the estimate of the number of workers required for plant refurbishment and based on plant construction experience, 138 workers of the total work force of 2273 are expected to migrate to Dutchess County and 101 workers are expected to migrate to Westchester County for refurbishment jobs. Of these in-migrants, 51 percent are expected to be accompanied by families. Some doubling-up is expected to occur among the unaccompanied workers, so that each unaccompanied mover would require 0.85 housing unit. This results in a refurbishment-related housing demand in the peak year of refurbishment of 128 housing units in Dutchess County and 94 units in Westchester County. Also, in-migrants filling indirect jobs created by the spending of project workers would require 30 units in each study area county, bringing the total project-related housing demand to 158 and 124 units in Dutchess County and Westchester County, respectively.

Refurbishment-related housing demand is less than the original construction-related housing demand of 194 and 143 units in Dutchess and Westchester counties. The number of housing units will have increased by about 85 percent in Dutchess County and 44 percent in Westchester County between peak construction and refurbishment periods. Refurbishment-related housing demand would account for 0.1 percent and 0.02 percent of the projected number of housing units in 2012 in Dutchess and Westchester counties, respectively. Housing demand during refurbishment would be tiny relative to the existing housing market and is even less than that experienced during construction. Only small new impacts on housing would result.

Housing impacts related to housing value and marketability that occur during the license renewal term are the same as those currently being experienced (Section C.4.4.2.1). The 120 additional workers (60 per unit) required during the license renewal term and the commensurate housing demand would cause only small new housing impacts.

C.4.4.3 Taxes

Two operating reactors are currently at Indian Point. Indian Point Unit 2 is owned and operated by ConEd, and Indian Point Unit 3 is owned and operated by the Power Authority of the State of New York (PASNY). Although PASNY is not subject to local taxes, it makes payments in lieu of tax based on its assessed valuation.

C.4.4.3.1 Impacts from Plant Construction and Operation

The town of Cortlandt and the village of Buchanan both collect taxes from Indian Point Unit 2. The town of Cortlandt is a political jurisdiction in Westchester County that provides services to unincorporated areas within its boundaries. It collects taxes for its general budget and special districts, fire districts, and the Hendrick Hudson School District. The village of Buchanan, where Indian Point Nuclear Plant is located, is an incorporation within the town of Cortlandt's boundaries. It is a separate taxing jurisdiction and independently assesses and levies taxes on Indian Point Unit 2. The Verplank Fire District, which includes the Indian Point Nuclear Plant, had an $8.21 tax rate per $1000 of assessment (Town of Cortlandt 1990b). The assessment of Indian Point Unit 2 is approximately 5.76 percent of the fair market value of the property. The existing tax rate is 0.123 in the village of Buchanan and an additional 0.245 in the town of

Cortlandt, which is a combined effective tax rate of about 2.1 percent on fair market value. Westchester County does not receive tax revenues from Indian Point.

Table C.54 presents the taxes paid by Indian Point Unit 2 and the payments in lieu of tax from Indian Point Unit 3. The Hendrick Hudson School District is the only special taxing jurisdiction detailed because it receives such a large share of local tax revenues. These tax revenues indicate that Indian Point Unit 2 has been an increasing source of tax revenues, whereas Indian Point Unit 3 has been declining in importance as a source of revenues. The net effect has been a fairly constant stream of revenues. Indian Point Unit 3 will continue to decline as a source of revenues according to a formula that reduces each annual assessment by 2 percent of the total property tax assessment in the village of Buchanan and the Hendrick Hudson School District.

Table C.55 demonstrates that the tax base provided by the Indian Point Nuclear Plant is very important to the town of Cortlandt, the village of Buchanan, and the Hendrick Hudson School District. Together, Indian Point Units 2 and 3 make up the majority of each jurisdiction's total assessed valuation; but Buchanan, where 91.8 percent of the total assessed value is provided by Indian Point Units 2 and 3, is the most notable. The town of Cortlandt does not receive revenue from Indian Point Unit 2 except for the Verplank Fire District. The fire district had a transitional assessed value for Indian Point Unit 3 of about $10 million in 1990, which translated into $81,464 in lieu of tax revenues. The Hendrick Hudson School District has about 5 percent of its assessed value attributed to Indian Point Unit 3, and the village of Buchanan has about 29 percent of its value from Indian Point Unit 3. Indian Point Unit 3 will cease to be a source of revenues for the school district within about 2 years and will continue to gradually decline in importance as a source of revenues for the village of Buchanan and the Verplank Fire District as a result of the assessment formula previously noted.

Table C.56 provides the total revenues and revenues received from Indian Point for each taxing jurisdiction. The contribution Indian Point makes to the total revenues of each of these jurisdictions is significant and ranges from 33.3 to 49.6 percent.

The practical effect of the property tax valuation of Indian Point and the resulting revenues has been the local government's ability to maintain a high level of service with relatively low property tax rates. For instance, the Hendrick Hudson School District has an average of 11 students per teacher (on par with most Westchester County school districts and considerably lower than the statewide average) (New York State Education Department 1990) while having the third lowest rate of taxation out of 40 school districts in Westchester County.

C.4.4.3.2 Predicted Impacts of License Renewal

The new tax-related impact expected to occur during refurbishment of Indian Point results from capital improvements undertaken during the current term outages. The assessed value of the plant would increase during this time and thus increase the tax payments of Indian Point Unit 2 to local jurisdictions. Whether PASNY would have to pay additional taxes (or payments in lieu of tax) to local jurisdictions because of improvements to Indian Point Unit 3 is unknown. This new impact does not involve capital improvements that take place during the final refurbishment outage, and that would be reflected in the plant's assessed value during the license renewal term. The magnitude of the new impact depends on which improvements would occur at Indian Point early on and which would be done during the final outage. For example, if the steam generator is replaced during a current term outage, the assessed value may increase considerably before the license renewal term begins. If steam generator replacement and other major capital improvements are not undertaken early on, the increase in assessed valuation may be only minor. The increase, in either case, is expected to cause only a small to moderate new tax impact.

During the license renewal term, the primary tax-related impact would be the continuation of tax payments that Indian Point Unit 2 is currently making to local jurisdictions. Again, it is unclear whether taxing arrangements regarding Indian Point Unit 3 would change so that PASNY would make payments to local jurisdictions during the license renewal term. There would also be a new impact resulting from the increase in tax payments because of improvements made at Indian Point during the final refurbishment period. Thus, tax revenues of Indian Point Unit 2 would increase in

absolute terms but might remain constant or decrease as a percentage of total revenues of the taxing jurisdictions. Based on current conditions, Indian Point Unit 2 tax revenues-- the continuing and additional payments combined-- would continue to be a large source of local revenues during the license renewal term and would allow local taxing jurisdictions to maintain adequate levels of local government service, including education and highways.

C.4.4.4 Public Services

C.4.4.4.1 Impacts from Plant Construction and Operation

Westchester County is divided into towns and villages. All social services are provided by the county. Schools are divided into districts (43 in the county), with town governments having no involvement in the education. One village, Buchanan, made strategic plans during the construction of the plant for growth of its infrastructure. Buchanan experienced good fiscal growth, and several services were made possible as a direct result of the Indian Point Nuclear Plant.

Education

The state of New York is divided into numerous school districts. School districts within 0.8 km (0.5 mile) of Indian Point are the Lakeland School District, Peekskill School District, Hendrick Hudson School District, and the Croton Harmon School District. Indian Point is located in the Hendrick Hudson School District.

The Hendrick Hudson School District had the same number of schools before the construction of the plant. However, two of the elementary school buildings were replaced, one in 1965 and the other in 1974. The local school administrator indicated that the construction and operations phases of Indian Point have not had an effect on schools in the district. An increase in enrollment was concurrent with the development of Indian Point. However, there was also a nationwide baby boom at this time, so this enrollment cannot be directly linked to the plant.

Local school officials in each of the school districts were interviewed, and the overall finding was insignificant impacts because of the construction or operation of the plant. The Croton Harmon director of pupil services indicated very little change since the construction of the plant. The Lakeland School District experienced substantial growth in the 1950s and 1960s, reaching a peak enrollment in 1973. Although this growth occurred at roughly the same time as the plant construction, the construction itself did not have a major effect on the district. The Lakeland School District has been more heavily influenced during operations by industry in the Poughkeepsie and Yorktown area as opposed to the operation of the plant.

Transportation

Transportation in Westchester County consists of approximately 240 km (150 miles) of county roads and more than 970 km (600 miles) of state roads. Local officials interviewed gave no indication of major problems stemming from the construction or the operations of Indian Point Nuclear Plant.

Public Safety

Some municipalities have local police departments, whereas others contract with the New York State Police for police protection. Individuals interviewed in the municipality of Buchanan indicated that because of the fiscal growth associated with Indian Point, the services and staff of the village also grew. For instance, the police force has essentially doubled in size. More than 70 percent of the fire departments are on a volunteer basis. Local emergency management is operated through the Office of Defense and Emergency Services.

A four-county nuclear safety committee is in the area, with Westchester County being the lead county. An in-depth plan is in place, and the department works closely with the state, the Federal Emergency Management Agency

(FEMA), ConEd, and PASNY. One major drill and 10 to 20 mini-drills are conducted each year. Money for this department comes from assessment of Indian Point and from the county government.

Social Services

Social services are provided for at a county level. Local officials interviewed stated that since plant operations began, there had been no increase in the demand for services from the department. However, it was indicated that more staff was required in the beginning to develop a new emergency plan for the county. Some municipalities have senior citizen programs or "Meals on Wheels.".

Public Utilities

Two power companies supply gas and electricity to Westchester County. Water in the area is provided by the Montrose District. Some of the smaller municipalities have a split between private and public sewer systems. Local officials interviewed gave no indication of any impacts from the construction or operation of Indian Point.

Tourism and Recreation

Local leaders interviewed indicated no change in tourism. Most people do not remember the plant is even there. The county operates an extensive park system of 65-78 km2 (25-30 square miles). The plant did, however, provide one municipality with the capability of building a recreation complex and a public pool.

Indian Point now has an emergency preparedness plan in effect. This plan is noteworthy to the tourist industry because it not only accounts for the needs of the residents near the plant but also addresses plans for evacuating the transient population and tourists in the area.

ConEd operates an information center at the plant site. This center is visited mostly by school and tour groups. At the plant, visitors can see the control room, watch films, and see hands-on exhibits.

C.4.4.4.2 Predicted Impacts of License Renewal

Based on the estimated 2273 direct workers required during peak refurbishment, the staff estimates that 122 direct workers and 40 indirect workers will migrate with their families to the study area counties (Section C.4.4.1.2). The number of children accompanying these workers is estimated using the New York average family size (3.22) and assuming that all families include two adults. Children are expected to be evenly distributed in age from ?1 to 18 years. Assuming 72.2 percent of these children are school age (5 to 18 years), there will be an average of 0.88 school-age children per in- migrating family, or a total of 144 new students in the study area counties. This would represent a tiny increase in the school enrollments of the study area counties, even if all new students were concentrated in one school district. Impacts to education, if any, will be small.

During construction and operation of Indian Point, there were no notable impacts on any of the public services. Future impacts are projected to be largely the same as those that occurred during past operations.

C.4.4.5 Off-Site Land Use

This section describes the off-site land-use impacts of the construction, operation, and license renewal of Indian Point. The discussion of impacts is primarily concerned with land use in the immediate vicinity of the plant, but impacts to the town of Cortlandt, the villages of Buchanan and Peekskill, and Westchester County are described where appropriate. Land-use impacts are examined for two time periods. First, Section C.4.4.5.1 identifies the land-use impacts of Indian Point's construction and operation. Next, Section C.4.4.5.2 projects the land-use impacts of Indian Point's refurbishment period, based on the impacts that occurred during the plant's construction. Also, Section C.4.4.5.2 projects the land-use impacts of the plant's license renewal term, based on the impacts that have occurred during operations. Information sources for this report include the Final Environmental Statement Related to the Operation of

Indian Point Nuclear Generating Plant, Units 2 and 3 (AEC Dockets 50-247 and 50-286) and interviews with key information sources in Westchester County. Section C.4.1.5 describes the methods used to assess and project land-use impacts for all case study plants.

C.4.4.5.1 Impacts from Plant Construction and Operation

Indian Point is located on a 96.7-ha (239-acre) site on the Hudson River. Before the beginning of Indian Point's construction in 1956, the plant property was the abandoned site of the Palisades Amusement Park, and much of the surrounding property was vacant. By the time Units 2 and 3 began operations, land in the immediate vicinity of the plant site had been zoned for heavy industrial use, and some of it had been developed. The Georgia-Pacific Corporation operated a wallboard factory just southwest of the Indian Point site, and a number of industrial facilities were owned by the Standard Brands Corporation in Peekskill, just north of the nuclear plant's property boundary. The plant site was bounded by Broadway, a minor public road, to the east and by the Hudson River to the west. In Buchanan, land use in the plant's general vicinity consisted mostly of low-density, single-family residential development and some limited commercial uses. The mountainous, wooded property on the west bank of the Hudson across from Indian Point was part of the Palisades Interstate Park and was mostly devoid of development.

Indian Point's construction had very minor direct land-use impacts on property in the immediate vicinity of the plant. The abandoned amusement park site provided more than adequate land area for the three units and their associated buildings and storage facilities. Because the site was so large and had been developed previously, the disruption of additional property outside the park's boundaries was not necessary (AEC Dockets 50-247 and 50-286).

However, the plant's construction did have noticeable direct land-use impacts on the village of Buchanan. Since the late nineteenth century, development along the Hudson River near Buchanan had been made up largely of river-oriented commercial land uses such as quarrying. But by the time Indian Point's construction began, much of this commercial development had slowed to a halt. The commercial void turned Buchanan into an economically depressed area with no industrial development to support the existing residential land use. According to one key informant, Indian Point's construction gave Buchanan the opportunity to develop industrial properties. This was because the village had rezoned much of its land along the river to the industrial classification for Indian Point's construction, and some of the surrounding property was subsequently developed for other industrial uses. The industrial growth included the Georgia-Pacific and Standard Brands facilities south and north of Indian Point, respectively. This new development helped bolster Buchanan's economy and established the industrial land-use pattern that has dominated development along the Hudson in Buchanan since Indian Point's construction.

Indian Point's operation has also had noticeable land-use impacts in the immediate vicinity of the plant, in the town of Cortlandt and in Buchanan and Peekskill. Some informants stated that the plant, and especially its transformers and transmission lines, might have deterred some residential development in Buchanan. This is one explanation offered for the existence of some large, vacant properties near the plant. The informants cited development pressures and the demand for housing in the region, as well as the favorable location of the properties in terms of transportation routes and the Hudson River, and asserted that the plant's presence might account for the fact that the properties are not developed. Conversely, some informants felt that Indian Point's local tax contributions had allowed the town of Cortlandt and the village of Buchanan to maintain relatively low property tax rates and that this had encouraged new residential development. Either way, Buchanan is still primarily a residential area, with some relatively expensive homes built within 1.5 km (1 mile) of Indian Point. Because residential growth has continued in Buchanan within a short distance of Indian Point, the overall land-use impacts of the plant's presence seem to be neutral in terms of residential development patterns.

Key sources also indicated that the nuclear plant's presence and the industrial development that it helped spawn in Buchanan had helped encourage industrial development in Peekskill. North of Indian Point, the village of Peekskill has developed the old Standard Brands complex into the Charles Point Industrial Park. The Charles Point complex, which is the site of the Charles Point Resource Recovery Plant (the county's waste disposal facility), has been very successful in attracting small industries. Indian Point's successful location and operation encouraged the villages of Buchanan and

Peekskill to promote industrial development around the nuclear plant and at Charles Point. This development has established industry as the dominant land use along the river in the two villages. In general, operations at Indian Point have had noticeable impacts on both residential and industrial development patterns in Buchanan and Peekskill.

C.4.4.5.2 Predicted Impacts of License Renewal

The direct impacts of Indian Point's refurbishment and license renewal term on land use in the immediate vicinity of the plant, in Buchanan and Peekskill, and in Westchester County are expected to be small. Refurbishment-related population growth is projected to represent less than 0.1 percent of Westchester County's projected population in 2013. Population growth associated with the license renewal term is also projected to account for less than 0.1 percent of the county's projected population in 2013. Increases this small during refurbishment and the license renewal term are likely to have no impacts in terms of residential development patterns.

Because much of the land in the plant's vicinity has been zoned for industrial use and because the industrial land-use pattern has become well established along the river in Buchanan, it is expected that the area would continue to attract some industrial development. This is especially true for the Charles Point Industrial Park, which would continue to cater to smaller, light industries and warehouse operations. Also, there are two large, vacant properties, one zoned for manufacturing and the other for light industry, in Buchanan near Indian Point. The parcel zoned for light industrial use is adjacent to the Indian Point property and is currently being developed as warehouse space. Because the residential and industrial land-use patterns that exist in Buchanan have been established for many years, Indian Point's new direct land-use impacts are expected to be small.

The indirect land-use impacts of the license renewal term at Indian Point are also expected to be small. This is because Indian Point Unit 3 was acquired by PASNY in 1978, and the authority has been making annually decreasing payments in lieu of tax to the local jurisdictions since that time. Thus, the village of Buchanan and the town of Cortlandt have had to increase their property tax rates to compensate for losing those portions of their tax bases that had been provided by ConEd for Unit 3. Key informants felt that this increase in property tax rates had already caused a decrease in the demand for residential development in the area and that this indirect land-use impact is likely to continue. Overall, however, Indian Point's refurbishment and license renewal term are expected to have small direct and indirect land-use impacts.

C.4.4.6 Economic Structure

C.4.4.6.1 Impacts from Plant Construction and Operation

The construction and operation of Indian Point have resulted in insignificant economic impacts to Westchester and Dutchess counties. Table C.57 presents the estimated employment and income effects of Indian Point on residents of the two counties. The plant has increased employment and income for residents employed during its construction and operation, and this direct employment and income has generated local expenditures resulting in indirect employment and income. But the percentage of each county's employment and income that is derived from Indian Point indicates the insignificance of the plant's economic impacts on the counties.

C.4.4.6.2 Predicted Impacts of License Renewal

The work force scenario detailed in Section C.3.1 was used to estimate the employment and economic effects of refurbishment at Indian Point. Table C.58 shows the total direct and indirect plant-related employment of Dutchess and Westchester county residents during refurbishment.

It is projected that Indian Point would employ 393 Dutchess County residents and 289 Westchester County residents as refurbishment workers in 2012 (Section C.4.4.1.2). Indirect jobs that would result from purchases of goods and services during refurbishment are expected to employ 591 residents of each study area county.

Therefore, the total direct and indirect employment affecting Dutchess County during the peak refurbishment year is projected to be 984. This employment is projected to represent 0.5 percent of the total employment in Dutchess County in 2012, resulting in small impacts.

There would be smaller employment impacts in Westchester County, assuming the bounding case work force scenario. The total direct and indirect employment affecting Westchester County during the peak refurbishment year is projected to be 880. It is projected that this would represent only 0.2 percent of the county's employment in Westchester County in 2012. The impacts to employment in Westchester County are expected to be small.

Relatively few new plant-related jobs would be created at Indian Point during the license renewal term. Nearly all plant -related employment (and associated impacts) expected during that time period would represent a continuation of employment (and impacts) from past operations. Table C.59 shows the estimated impact on Dutchess and Westchester counties from the increased labor requirements at Indian Point after refurbishment in 2015.

The license renewal term work force for Indian Point would require an estimated 120 additional employees (Section C.4.4.1.2). Of those additional workers, 45 are projected to be Dutchess County residents and 33 are projected to be Westchester County residents. In addition, license renewal is expected to create indirect jobs for 45 Dutchess County residents and 33 Westchester County residents. With the continued effects of the plant's current employment and the additional employment to be created, total license renewal term employment is estimated to represent 0.60 percent of Dutchess County employment, resulting in small impacts. Total license renewal term employment is projected to represent 0.13 percent of Westchester County employment, also representing small impacts.

Table C.59 indicates that the economic effect of Indian Point on Dutchess and Westchester counties is small in relative terms but is still a crucial component of employment for the town of Cortlandt, the village of Buchanan, and the Hendrick Hudson School District in Westchester County. License renewal would also maintain Indian Point as a source of property tax revenues, which could enable these localities to maintain lower residential and business tax rates and thereby attract economic development.

C.4.4.7 Historic and Aesthetic Resources

This section describes the impacts that the construction and operation of Indian Point have had on historic and aesthetic resources and projects the expected impacts of the plant's refurbishment and post-relicensing operations. Information sources include the Final Environmental Statement Related to Operation of Indian Point Nuclear Generating Plant, Unit 2 (AEC Docket 50-247), Final Environmental Statement Related to Operation of Indian Point Nuclear Generating Plant, Unit 3 (AEC Docket 50-286), and interviews with key information sources in Westchester County and elsewhere in New York.

C.4.4.7.1 Impacts from Plant Construction and Operation

The construction and operation of Indian Point have had noticeable impacts on historic resources and significant impacts on the aesthetic resources of the area. The site is located within 40 km (25 miles) of the city limits of New York City, in affluent and influential Westchester County, arguably the birthplace of the country's environmental movement. The plant is built near the gateway to the Hudson Highlands, one of only two highly scenic areas remaining along the Hudson River between New York City and Albany that retains much of the nineteenth-century appearance and character. The area is important historically as a locale for American Revolutionary War battlefields and activities and is located near the U.S. Military Academy at West Point. One informant characterized this importance as being "extreme," both statewide and nationally. Another characterizes the Indian Plant environs as being "one of the most important historic areas in the state." It should be noted that the plant is visible from very few historic resources, based on a viewshed analysis (Jones & Jones 1975).

The plant's location--on the east banks of a point of land near a large bend in the Hudson River--accentuates the visibility of its containment vessels. Although the general area, particularly north of the plant, is noted for its scenic

quality, the immediate plant environs has other industrial uses that detract from the overall scenic context. The whole facility is easily viewed by passengers riding the heavily traveled Amtrak trains running between New York City and Albany. One informant characterizes this impact alone as a "big visual impact." Several sections of the Palisades Interstate Park on the west bank of the Hudson River are at this point, as well as parks and beaches on the east bank and various fishermen's landings. Both commercial and pleasure boating predominate in this area of the Hudson River.

Repeated comments from key sources document the uniform sense of intrusion that the plant has given to the area's aesthetic quality. Among the chief concerns has been the visibility of the plant from Harriman State Park and Bear Mountain State Park.

The impact results from the effect of strong visual symbols of twentieth-century technology such as the three identical large domed containment structures near the entry to an area (Hudson Highlands) that is largely nineteenth-century in appearance. Although the plant was designed to present a pleasant and attractive appearance, and the general site plan includes a freshwater lake, a new visitors' center, and a 30-ha (80-acre) woodland recreational facility (AEC Dockets 50-247 and 50-286), these amenities have not proved sufficient to overshadow the plant's perceived intrusion into the area's sense of place and historic character. One source summarizes this situation: "The visual impact affects the historic river communities in a broad sense. You can see the plant from so many areas that it has diminished the historic character of the areas and the aesthetic appeal in general. It definitely intrudes and disturbs the overall sense that one gets from viewing the area."

Archaeological sites at or near the power plant already were disturbed severely before construction of the plant, and the impacts from plant construction and operation here are considered to have been insignificant (AEC Docket 50-247). The National Register of Historic Places (including designated National Historic Landmarks) and the Hudson River Valley Commission's preliminary inventory of historic resources list numerous buildings and sites within several kilometers of Indian Point, but none has been directly affected by the plant's construction (AEC Docket 50-247). Many structures are not listed and are thereby unprotected in any planning processes, but they have considerable historic value nonetheless; many of these may be eligible for listing but have not undergone the lengthy qualification process. The noticeable impacts have come from the indirect impacts to these and other historic resources. In what may be an isolated anecdotal account, one respondent cited this experience: one homeowner was encouraged to restore a building that had historic value but declined, discounting the building's significance because of its proximity to the plant.

C.4.4.7.2 Predicted Impacts of License Renewal

Refurbishment and relicensing of Indian Point would probably mean a continuation of the persistent negative perception of the plant's effects on aesthetics and historic resources. The relicensing process and the refurbishment activity would likely bring the plant to the public's awareness and provide a gauge of the degree to which the public has become adapted to and accepting of the plant. The plant's continued presence most likely would continue to remind recreationists and other viewers of the presence of this modern technology among the river communities and historic features of the areas, a fact that to this point has been perceived as negative. One informant states that if the Indian Point facility were being proposed now, its proponents would have a "large fight on their hands from the aesthetics point of view."

Potential impacts to historic resources must be determined through consultation with the SHPO.

C.4.5 Oconee

The impact area--the locations where the most pronounced socioeconomic impacts might result from refurbishment and license renewal--for the Oconee Nuclear Station (ONS) consists of Oconee County, South Carolina. The selection of this area is based on worker residence patterns, employment, expenditures, and tax payments. Figure C.12 depicts the impact area, and Figure C.13 shows the region in which it is located.

C.4.5.1 Population

This section discusses the local population growth associated with the construction, operation, and license renewal of ONS. Section C.4.1 describes the methodology used to project population growth for all plants. Data used to prepare this section were obtained from Socioeconomic Impacts of Nuclear Generating Stations: Oconee Case Study (NUREG/CR-2749, vol. 7); Environmental Assessment Proposed Rule on Nuclear Plant License Renewal (NUREG-1398); SEA refurbishment work force estimates (Appendix B; SEA 1994); population projections by the State of South Carolina Division of Research and Statistical Services; and Duke Power Company (1990).

The discussion of population growth is organized into two time periods. Section C.4.5.1.1 identifies the population growth that Oconee County has experienced as a result of the construction and operation of ONS from 1967 to 1990. Section C.4.5.1.2 projects the population growth expected to result from ONS's refurbishment period and license renewal term operations beginning in 2013 (Units 1 and 2) based on the growth associated with the plant's initial construction. Also, Section C.4.5.1.2. projects the population growth expected to result from ONS's license renewal term based on the growth associated with operations.

Figure C.12 Socioeconomic impact area associated with Oconee Nuclear Station refurbishment: Oconee County.

Figure C.13 Region surrounding the Oconee Nuclear Station nuclear plant.

C.4.5.1.1 Growth Resulting from Plant Construction and Operation

ONS's construction resulted in small population increases in Oconee County (Table C.60). During the peak construction year, 1971, ONS personnel and their families who migrated to the area to work at the plant, and others who moved into the area to work in jobs generated by the plant's presence, totalled approximately 701 persons. This influx of new residents represented 1.7 percent of Oconee County's total population in 1971 (NUREG/CR-2749, vol. 7, p. 89).

Operations at ONS have resulted in smaller population increases than did the plant's construction. In 1990, 2300 permanent plant staff were on-site at ONS (this figure includes regular plant staff and Duke Power's Construction Department, which was permanently located on-site at ONS in 1985). In past operating years, additional contract workers have been on-site for planned outages, but they have not been included here because their presence at the plant was temporary.

Of the permanent plant staff, 50 percent (1150) reside in Oconee County (Duke Power Company 1990). Based on the residential settlement pattern of ONS's 1975 work force, it is estimated that 83.6 percent (961) of those residing in Oconee County in 1990 were prior residents who obtained jobs and that 16.4 percent (189) were workers who migrated into the area for jobs (Table C.61). Also following the pattern set during plant operations, it is estimated that 77 percent of the in-migrants (146) were accompanied by their families. Assuming the 1990 South Carolina average family size of 3.16 persons, this represents a total in-migration of 504 new residents for the county. Based on the distribution of nonplant jobs created in Oconee County during earlier operating periods, it is estimated that ONS's 1990 operations created an additional 948 indirect jobs in service industries supported by the spending of Oconee workers. However, it is assumed that no additional residents moved into Oconee County for these indirect jobs, as all additional employment opportunities are expected to have been filled by persons who resided in Oconee County or by long-distance commuters. In all, an estimated 504 new residents moved into Oconee County as a result of ONS's 1990 operations (Table C.61). These new residents made up about 0.9 percent of Oconee County's 1990 population of 57,494 (NUREG/CR-2749, vol. 7, pp. 65-87; MacFarlane 1990).

C.4.5.1.2 Predicted Growth Resulting from License Renewal

As discussed in Section C.3.1, ONS's license renewal would require the completion of a number of refurbishment tasks for Units 1, 2, and 3. Many of the refurbishment tasks are expected to be completed during scheduled refueling outages at each unit during the 10 years that precede the expiration of the initial operating license. However, the final refurbishment work is expected to be completed during one large refurbishment outage scheduled for each unit a year

or two before the initial operating license expires. Because the final refurbishment outage would involve more workers on-site over a longer period of time than any of the preceding refueling outages, it represents the peak refurbishment period. For other assumptions concerning the refurbishment work force, refer to Sections C.3.1 and C.4.1.1.2.

Assuming the refurbishment schedule described in Section C.3.1, the peak refurbishment years for ONS Units 1 and 2 would probably be 2011 and/or 2012, and the peak refurbishment year for ONS Unit 3 is expected to be 2013. For each unit, the on-site refurbishment work force would be about the same size and would be on-site for approximately the same period of time (refer to Section 6.4.1.1.2 for other work force assumptions). However, because uncertainties exist concerning the length of the outage and the size of the work force required to complete the refurbishment of a given unit, this section examines a bounding case work force scenario as described in Section C.3.1.

Given the work force scenario detailed in Section C.3.1, it is estimated that 2273 workers would be on-site to complete refurbishment of ONS Units 1 and 2 in 2011 or 2012 and Unit 3 in 2013 (SEA 1994). Further, assuming that the residential distribution of refurbishment workers would be similar to that of the 1971 ONS construction work force, it is estimated that 25.4 percent (577) would reside in Oconee County. Based on plant construction experience, it is projected that 50 percent (230) of those residing in Oconee County would be prior residents who obtain refurbishment jobs, and 289 would be workers who migrate into the area for refurbishment jobs (Table C.62). Also following the pattern set during plant construction, 33.3 percent of the in-migrants (96) would be accompanied by families. Using the South Carolina average family size of 3.16 persons, total refurbishment worker in-migration would result in 496 new residents for the county. Based on the ratio of plant to nonplant jobs created in Oconee County in 1971, ONS's refurbishment is projected to create an additional 118 indirect jobs in service industries supported by the spending of ONS refurbishment workers (Table C.62). However, no additional residents are expected to move into Oconee County for these indirect jobs, as all additional employment opportunities would be filled by persons who already reside in the county or by long-distance commuters. In all, approximately 496 new residents would be expected to move into Oconee County as a result of ONS's refurbishment under the work force scenario. That would represent 0.7 percent of Oconee County's projected population of 73,542 in 2013 (NUREG/CR-2749, vol. 7, pp. 62-86).

Once plant refurbishment is completed for ONS Units 1, 2, and 3, the work force would consist mostly of permanent plant staff. Additional refurbishment/refueling workers would be temporarily on-site approximately every 2 years, but they would not be permanent, on-site plant staff, and many of them are expected to commute from outside the study area. It is expected that a maximum of 60 additional permanent workers per unit would be required during the license renewal term, adding 180 workers to ONS's existing work force. Assuming that the new workers' residential distribution would be the same as that of current plant staff, approximately 50 percent (90) would reside in Oconee County. Based on worker in-migration in 1975, it is expected that 83.6 percent (75) of those residing in Oconee County would be prior residents who obtain jobs and 16.4 percent (15) would be workers who migrate into the area for jobs (Table C.63). Also following the pattern set during plant operations, 77 percent of the in-migrants (12) would be accompanied by their families. Using the South Carolina average family size of 3.16 people, total in-migration would result in 41 new residents for the county. Based on the ratio of plant to nonplant jobs created in Oconee County in 1975, ONS's license renewal term is projected to create an additional 74 indirect jobs in service industries supported by the spending of ONS workers (Table C.63). However, no additional residents would be moving into Oconee County as a result of these indirect jobs, as they are expected to be filled by county residents and commuters. In all, approximately 41 new residents would be expected to move into Oconee County as a result of ONS's license renewal term. That would represent less than 0.1 percent of Oconee County's projected population in 2013 (NUREG/CR-2749, vol. 7, pp. 62-86).

C.4.5.2 Housing

The following sections examine the housing impacts that occurred in Oconee County during construction and operation of ONS and predict housing impacts that would result from refurbishment activities and continued operation. Possible impacts to housing include changes in the number of housing units, particularly the rate of growth of the housing stock;

changes in occupancy rates; changes in the characteristics of the housing stock; and changes in rental rates or property values.

Section C.4.1.2 includes a complete discussion of the methodology and assumptions used to predict housing impacts.

C.4.5.2.1 Impacts from Plant Construction and Operation

The following discussion begins with a description of project-related housing demand in Oconee County. A discussion of the housing market at the time of ONS construction and changes that occurred in the housing market follows. Finally, impacts from the operation of ONS are assessed.

Project-related population increase and commensurate demand for housing in Oconee County peaked in 1971, when the average annual employment at ONS reached 2342. Project-related population increase in Oconee County was 701 persons (including family), while off-site housing demand reached 167 units (NUREG/CR-2749, vol. 7). Population increase was kept low because of Duke's local hiring policy. Also, Duke Power provided on-site "bachelor's quarters" accommodating 150 workers. Thus, project-related demand for housing was quite low relative to the peak number of employees. Project-related demand at its peak in 1971 accounted for 1.2 percent of the 1970 Oconee County year-round housing stock.

The 1970 Census reported a 3.0 percent vacancy rate, or 411 vacancies, either for sale or rent in Oconee County (U.S. Bureau of the Census 1972). These vacancies existed despite a project-related demand for 85 units in 1965 and 145 units in 1970. These vacancies, together with continued expansion of the housing stock in 1970 and 1971 and the proximity of the metropolitan areas of Greenville and Anderson, were adequate in meeting project-related demand.

Changes in the housing stock experienced during construction include an increase in the number of multifamily units and the number of mobile homes. In the intercensal period 1970-80, a net increase of 315 multifamily units occurred in Oconee County (U.S. Bureau of the Census 1972, 1982). This was a 41.2 percent increase over the 1970 multifamily stock. The most significant change was the addition of structures with four or more units. The period of quickest growth in this housing type occurred between 1971 and 1974, when 248 multifamily units were built in Oconee County (NUREG/CR-2749, vol. 7). The number of mobile homes in Oconee County doubled in the intercensal 1970- 80 period, so that by 1980 there were 2881 mobile homes (U.S. Bureau of the Census 1972, 1982).

The median monthly rental rates in Oconee County were $37 in 1960, $36 in 1970, and $90 in 1980. The median rental rates in South Carolina for the same years were $32, $50, and $130. Rental rates in Oconee County increased at a slower rate than those in the state of South Carolina despite the addition of numerous new multifamily units in Oconee County. Local perception is that the rental rate of nonsubsidized units, which ranged between $120 and $250 per month in 1979, increased beyond inflation-induced effects because of the increased demand for housing and because in-migrants had incomes larger than local residents (NUREG/CR-2749, vol. 7).

In summary, housing in Oconee County adequately met project-related demand, and little change in housing characteristics or value resulted because of project-related demand. Construction-related impacts on housing were insignificant.

The operation of ONS has had only insignificant impacts on housing. Lake Keowee has attracted substantial residential development; however, the plant itself has had no substantial effect on development. Occasionally, a new home is built for operation workers. The values of properties in the vicinity of the plant have not been negatively affected by its operation.

C.4.5.2.2 Predicted Impacts of License Renewal

Project-related population increase and the commensurate housing demand would be the cause of new housing impacts during refurbishment activities. This section summarizes recent and anticipated growth in housing and estimates possible housing impacts during refurbishment and the license renewal term.

Between 1970 and 1980, the number of housing units in Oconee County increased 44 percent above the 1970 housing stock (U.S. Bureau of Census 1972, 1982). Residential development occurred primarily along the Keowee Lake. The rate of growth slowed somewhat during the 1980s, so that the 1980 housing stock increased by 28.5 percent between 1980 and 1990. If the rate of growth experienced in the 1980s continues through 2010, shortly before the peak refurbishment year, there will be 42,900 housing units in Oconee County. The projected population of Oconee County in 2013 is 73,542 and will require 28,840 housing units. Although adjustment in housing growth will be made according to population growth, the current rate of growth suggests that there will be available housing in Oconee County during refurbishment activities.

According to the estimate of the number of workers required for refurbishment activities and based on plant construction experience, 289 workers of the total work force of 2273 are expected to migrate to Oconee County for refurbishment jobs. Of these in-migrants, 96 would be accompanied by families. Some doubling-up is expected to occur among the remaining 193 in-migrants, so that each mover would require 0.85 housing unit. Worker migration to Oconee County would result in a total project-related housing demand in the peak year of refurbishment of 260 housing units.

Refurbishment-related housing demand is greater than the construction-related housing demand of 167 units, but the number of housing units in Oconee County will have increased 200 percent between construction and refurbishment periods. Housing demand would account for about 0.6 percent of the possible 42,900 housing units in Oconee County during refurbishment. Because demand in the bounding case scenario would be so small relative to the existing housing market and because impacts would be even less than those experienced during plant construction, refurbishment-related housing demand is expected to have only small new impacts on the Oconee County housing market.

Housing impacts related to housing value and marketability that would occur during the license renewal term are the same as those currently being experienced (Section C.4.5.2.1). The 180 additional workers (60 per unit) required during the license renewal and the commensurate housing demand would cause only small new housing impacts.

C.4.5.3 Taxes

C.4.5.3.1 Impacts from Plant Construction and Operation

Oconee County is the only political jurisdiction that taxes ONS. Besides collecting taxes for its own use, the county collects property tax levies for the Oconee School District. The state of South Carolina appraises electric utility property, including ONS, using the unit valuation method. This method assigns a value to the licensee's power plant based on the historical cost of assets less depreciation; capitalization of a future income stream over a 3-year period; and stock value and debt approach over a 3-year period. After exemptions for nontaxable assets, the value is apportioned to the local jurisdiction by gross investment. Much of the information used in the appraisal is from Federal Regulatory Commission Form 1, which is public information. The appraised value is multiplied by 10.5 percent to calculate the assessed value that the county uses to apply tax rates.

The power plant has been an important source of revenue for Oconee County (Table C.64). The county received about $7.6 million in taxes from the licensee in 1975 (constant 1989 dollars) and about $6.6 million in 1989. In 1975, property tax from the licensee accounted for about 50 percent of property taxes in the county and about 25 percent of total revenue. Oconee County's assessments increased from $111 million in 1975 to approximately $173 million in 1989, with the licensee's contribution in terms of total tax revenues falling from 50.1 percent to 29.1 percent, still demonstrating a heavy reliance by the county on the power plant. In the same time period, the power plant's portion of total county revenue fell from nearly 25 percent to 14.2 percent.

The Oconee School District has had strongly increasing revenues from state and local sources. In 1981, total revenues were approximately $20.2 million (1989 dollars). By 1989, total revenues were approximately $32.8 million. The contribution to school district taxes from the licensee increased from about $3.5 million to $4.6 million from 1981 to 1989. While this was a declining percentage of the total Oconee School District revenues (from 18 percent to 14 percent over this period), the power plant still had a moderate impact.

The overall trend has been a decline in the importance of ONS as a direct, primary source of revenues and taxes. This trend has been the result of strong economic growth in Oconee County and the much higher county property assessments that ensued. Also, Oconee School District revenues have sharply increased, partly as the result of state programs promoting improved education.

The tax effects of the power plant have been quite favorable to the local school district. For instance, in the 1987-88 school year, Oconee School District ranked 10th out of the 91 school districts in South Carolina in assessed value per pupil. The Oconee School District ranked 82nd out of 91 school districts in its tax effort, yet it ranked 57th in revenue received per pupil, 26th for local taxes per pupil for current operations, and 13th in per pupil expenditures for capital outlay. Thus, while having a relatively low taxation rate, the property tax base in Oconee County allowed Oconee School District to maintain its schools at respectable expenditure levels. During this period, the assessed valuation per pupil was about twice the median for all school districts in the state (Hill 1989).

An earlier study of Oconee indicated that county employment and capital expenditures increased dramatically, with large increases in tax revenues associated with the power plant (NUREG/CR-2749, vol. 7). This trend seems to have contributed to economic growth in Oconee County. The Oconee County auditor indicated that high-technology industry had been moving into Oconee, a trend attributable to the man-made lakes associated with the power plant and the water and sewer systems installed in the mid-1980s. The increase in property tax revenue from the power plant made many of the improvements in infrastructure possible without correspondingly large increases in the tax rate.

C.4.5.3.2 Predicted Impacts of License Renewal

During refurbishment of ONS, a new tax-related impact is expected to occur. This new impact involves increases in tax payments that would result from capital improvements during the current term outages. Tax increases resulting from improvements made in the final refurbishment outage would affect taxes only during the license renewal term. The magnitude of the impact depends on Duke Power's decision about which improvements would occur early on and which would be done during the final outage. For example, if the steam generator is replaced during a current term outage, the assessed value may increase considerably before the license renewal term begins. If steam generator replacement and other major capital improvements are not undertaken early on, the increase in assessed valuation may be only minor. The increase, in either case, is expected to cause only a small to moderate new tax impact.

During the license renewal term, the primary tax-related impact would be the continuation of tax payments that ONS is currently making to Oconee County and the Oconee School District. A new impact also would result from the increase in tax payments resulting from improvements made at Oconee during the final refurbishment period. Thus, tax revenues would increase in absolute terms, although they may not provide a proportionally larger share of the total revenues of either taxing jurisdiction. This is especially true because currently the tax base in Oconee County is increasing rapidly. This trend was expected to continue with the addition in 1992 of the Bad Creek Pumped Storage Hydro Power Facility. The increase in assessed valuation of ONS after refurbishment may offset this trend so that ONS tax revenues--continuing and additional payments combined--would continue to make up a substantial share of the total revenues. The moderate tax-related impact currently being experienced in the school district and the county would continue during the license renewal term.

C.4.5.4 Public Services

C.4.5.4.1 Impacts from Plant Construction and Operation

Municipalities in the Oconee study area have a council-mayor form of government that provides both legislative and executive supervision of municipal services such as water, sewers, roads, fire, police, and recreation. The majority of services are provided for at a county or state level (NUREG/CR-2749, vol. 7, p. 105). Before 1975, when the county-council form of government was established, the Oconee County government was run by local delegates, with daily activities being the responsibility of a board of county commissioners. Although it is not known if the change to county -council government was directly related to the plant, the change provided significant local control of county services. During the period immediately after operations began (1978), the scope and type of county services were expanded and a number of new departments were created. Several new programs were added, and existing ones were upgraded, particularly public safety, social services, and educational institutions (NUREG/CR-2749, vol. 7, p. 113). Information pertaining to expenditures is discussed in detail in Section C.4.5.1.

Education

Public education in Oconee County is provided by one school district that serves the whole county. Before 1966 (preconstruction phase), the county operated two school systems, one for the black population and another for the white population. Desegregation began after 1967, and by 1969, total integration of the schools was achieved (NUREG/CR-2749, vol. 7, p. 114).

The overall change in enrollment throughout the 1970s was relatively small, never falling below 10,000 students. Oconee County schools have consistently had a better pupil/teacher ratio than the state. The ratio dropped from 22 to 1 in 1966 to 19.52 to 1 in 1981. During the mid-1970s, and coinciding with Duke tax payments on ONS and changes in the form of county government, school expenditures increased significantly (NUREG/CR-2749, vol. 7, p. 117).

The data on enrollments do not show any significant increases that could be associated with ONS's employment patterns. This was because daily commuters made up almost 75 percent of the peak construction work force and approximately half the operations work force; these workers created no new demand for local services. The total number of children of workers who moved into the county to take project-related jobs was not more than 140 students during plant construction in 1971 (1.4 percent of total enrollment) and 43 students during plant operations in 1978 (0.5 percent of total enrollment) (NUREG/CR-2749, vol. 7, p. 118).

The superintendent of education in Oconee County indicated that the power plant, along with many other industries, has had an impact on the educational system. He also stated that Duke Power is very supportive of all local efforts to improve schools and education in general. The operation of ONS did not put an immediate demand on education but, rather, had an impact over the long term. Local officials stated that Oconee County was previously a textile/agricultural area. This has changed over time. Industry today (the nuclear industry included) is more high-tech; therefore, the educational system has changed to meet the demand for technological skills.

Transportation

Oconee County is responsible for maintaining the primary and secondary road system under its jurisdiction. Money for the upkeep of local roads is provided through state and local contributions. Between 1970 and 1980, expenditures on the roads increased fourfold. However, there is no indication that this increase was directly related to the plant construction. During construction of the Keowee-Toxaway Project, Duke Power Company spent $5 million on relocating 34.6 km (21.5 miles) of roads. One of these roads was Oconee County Highway 183, which, upon relocation, ran directly past the proposed site for the ONS. Local officials gave no indication of major transportation problems stemming from the construction or operation of ONS (NUREG/CR-2749, vol. 7, p. 121).

Public Safety

Public safety expenditures increased steadily from 1967 to 1980, increasing from $107,500 to $954,200 per year. There were substantial improvements in police protection and fire-fighting equipment during this period. Expenditures from the budget were made primarily to purchase new police cars and fire equipment. Other large outlays were also made on

repairs to the jail (NUREG/CR-2749, vol. 7, p. 113). Oconee County has an elected sheriff and 30 full-time paid deputies. The county has a rural volunteer fire department, and some municipalities also have their own fire departments with paid firefighters. The town of Seneca recently purchased an aerial ladder truck for $500,000, which was funded from tax dollars.

The emergency preparedness center for Oconee County is supported through federal and county tax revenues. According to the local director for emergency preparedness, the construction phase had a minor impact on the demand for emergency services. The operations phase has had more of an impact in terms of all types of increases in the center's workload, ranging from additional paperwork to additional training. As far as refurbishment and refueling activities are concerned, the indication from the director was that there was more awareness of the potential for a nuclear accident throughout the county after the Three Mile Island accident.

Social Services

In 1967, social services in Oconee County consisted primarily of public assistance and food stamps. Little expansion in services occurred during the plant construction period. Beginning in 1974 (when construction was completed) several additional services were offered by the county. This coincided with a large increase in local tax revenues. Since then county expenditures in social services have remained fairly constant. According to the Department of Social Services in Walhalla, the construction phase had a definite impact on the demand for services, but the operations phase has had no impact on the level of services provided.

Public Utilities

Public utilities (water, sewer, electricity) in Oconee County increased from 0.5 percent of the budget in 1967 to 2.6 percent of the budget in 1980. Expenditures in the budget allowed for a countywide solid waste disposal capability in 1973 (NUREG/CR-2749, vol. 7, p. 113). An increased level of public services was provided, while the tax rates declined somewhat as a result of ONS's significant contribution to county revenues. The plant construction phase had an impact on the public utilities system, specifically water consumption; and the operation phase caused an increase in the demand for water and sewer services. Officials gave no indication that this demand was a burden on the utilities.

Tourism and Recreation

Local leaders interviewed indicated no adverse impacts from the construction or operation of the ONS. On the contrary, most people interviewed said that the plant has been an asset and that "water-related activities have increased since the plant moved in" because of the large cooling lake constructed for the plant. The town of Seneca recently completed a multimillion-dollar sports facility. A planner with the Community Development Department in Seneca thought the in-migration of executives associated with the plant increased use of recreation facilities and caused an upgrade in the quality of recreation in the area.

Duke Power operates a visitor's center, the World of Energy, which provides information about energy development and what is going on in the Oconee area in regard to energy. One local official indicated that, although there may be no tangible or visible impacts from the plant, it "has a positive effect on tourism; people visit the area and then go and tour the plant."

C.4.5.4.2 Predicted Impacts of License Renewal

Based on the estimated 2273 direct workers required during peak refurbishment, the staff estimates that 96 direct workers and no indirect workers will migrate with their familties to Oconee County (Section C.4.5.1.2). The number of children accompanying these workers is estimated using the South Carolina average family size (3.16) and assuming that all families include two adults. Children are expected to be evenly distributed in age from ?1 to 18 years. Assuming that 72.2 percent of these children are school age (5 to 18 years), there will be an average of 0.84 school-age children per in- migrating family, or a total of 81 new students in Oconee County. This represents a <1.0 percent increase above

the projected number of school-age children in Oconee County in 2013 (assuming the 1990 age distribution of the population). This slight increase will result in only small impacts to education.

During peak construction at ONS in 1971, approximately 701 persons moved into the area. These 701 persons accounted for only 1.7 percent of Oconee County's population in 1971 (Section C.4.5.1.1). During the construction of ONS, impacts on transportation, tourism, and recreation were small. Public safety and social services both increased in terms of financial improvements during the construction phase.

Peak refurbishment activities will bring 496 in-migrants to Oconee County. This population is smaller than the construction-related in-migrating population and represents a <1 percent increase in Oconee's projected population in 2013. The operations related in- migration is projected to be 41 persons. Adverse impacts, if any, to public services will be small during refurbishment and license renewal term operations. The positive effects on recreation will continue.

C.4.5.5 Off-Site Land Use

This section describes the off-site land use impacts of the construction, operation, and license renewal of ONS. The discussion of impacts is primarily concerned with land use in the immediate vicinity of the plant, but impacts for Oconee County are described where appropriate. Land-use impacts are examined for two time periods. First, Section C.4.5.5.1 identifies the land-use impacts of ONS's construction as part of Duke Power Company's larger Keowee-Toxaway Project. Section C.4.5.5.1 also describes the land-use impacts of ONS's operation as an entity separate from the Keowee-Toxaway Project. Next, Section C.4.5.5.2 projects the land-use impacts of ONS's refurbishment period based on the impacts that occurred during the plant's construction. Also, Section C.4.5.5.2 projects the land-use impacts of the plant's license renewal term based on the impacts that have occurred during operations. Information sources for this report include the Final Environmental Statement Related to the Operation of Oconee Nuclear Station, Units 1, 2, and 3 (AEC Dockets 50-269, 50-270, and 50-287); Socioeconomic Impacts of Nuclear Generating Stations: Oconee Case Study (NUREG/CR-2749, vol. 7); and interviews with key information sources in Oconee County. Section C.4.1.5 describes the methods used to assess and project land-use impacts for all case study plants.

C.4.5.5.1 Impacts from Plant Construction and Operation

ONS is located on a 206-ha (510-acre) site on Lake Keowee near Seneca. The nuclear plant was built as part of Duke Power Company's Keowee-Toxaway Project. ONS's construction, which began in 1967, was integrated with the impoundment of Lake Keowee (and the construction of Duke's hydroelectric plant) and the impoundment of Lake Jocassee (and the construction of Duke's pumped-storage facility). Because Lake Keowee and Lake Jocassee are integral to ONS's role in the Keowee-Toxaway Project, the impacts of their impoundment are considered as part of the land-use impacts of the nuclear plant's construction.

Together, the ONS site, Lake Keowee, and Lake Jocassee cover more than 10,700 ha (26,500 acres) of the 63,500 ha (157,000 acres) Duke Power purchased for the Keowee-Toxaway Project. Most of the land that Duke Power acquired was woodland, and the remainder (about 10 percent) had previously been used as marginal farmland and pasture land. No commercial or industrial development was on the property; however, there were over 300 rural residences and cabins, and nearly 900 residents (AEC Dockets 50-269, 50-270, and 50-287).

ONS's construction--and more specifically the impoundment of Lakes Keowee and Jocassee--had significant direct land-use impacts on Oconee County. The Keowee-Toxaway Project land purchase made the Crescent Land and Timber Company (a Duke Power subsidiary) the largest single private land owner in Oconee County. All of the residents on the Duke property were relocated, and all of the structures and much of the timber were removed from the plant site and from the areas that were to be inundated. Oconee County's road system underwent extensive change because of the project, as more than 34.6 km (21.5 miles) of road (including six major bridges) were constructed between 1967 and 1970 to compensate for the effects of the lakes' presence on the regional transportation network (AEC Dockets 50-269, 50-270, and 50-287; NUREG/CR-2749, vol. 7).

Lake Keowee and Lake Jocassee continued to have significant land-use impacts in Oconee County after their impoundment. Since the late 1960s, the lakes (especially Keowee) have become the focal point for Oconee County's residential and recreational land uses. The southern end of Lake Keowee, near Seneca, has attracted a great deal of the new residential development in the county. Much of the growth that has occurred in that area consists of very expensive resort-type homes and condominiums. Because of the area's climate, beauty, and recreational amenities, many of the developments on Lake Keowee have been targeted towards wealthy in-migrants, especially retirees. Keowee Keys--a retirement community that features private homes and condominiums, a marina, tennis courts, a country club, and a golf course--has some of the more expensive homes in the county. It also has been the most successful of the higher-priced developments on Lake Keowee, despite the fact that it is the residential area closest to the nuclear plant. Key informants indicated that the lakes' impoundment also had positive indirect impacts on residential development patterns in Oconee County. One of the important indirect effects results from the property tax payments that have been generated by the expensive developments on Lake Keowee. It is believed that the influx of new property tax revenues has allowed the municipalities within the county to extend their provision of public services (NUREG/CR-2749, vol. 7).

In terms of recreational land uses, much of the lakeshore property has been developed (either privately or by Duke Power) with campgrounds, boat launch areas, marinas, golf courses, and small retail establishments. Further development for recreational use has resulted from Duke Power's decision to deed much of its original land purchase to the state of South Carolina. The utility donated 400 ha (1000 acres) for the Keowee-Toxaway State Park, over 40,000 ha (100,000 acres) to the South Carolina Wildlife Resources Commission, and, more recently, 200 ha (500 acres) for Devil's Fork State Park. In general, key informants felt that the lakes were a very positive force in guiding recreational land use in Oconee County (NUREG/CR-2749, vol. 7).

ONS's operation, considered here separately from the existence of Lake Keowee and Lake Jocassee, has had moderate direct and indirect land-use impacts on Oconee County. According to key sources, the Oconee Station's presence has not been a deterrent to residential land use. Keowee Keys is the closest residential development to the plant, and it has been successful in sales, despite its relatively expensive property and housing costs and the nuclear plant's close proximity. Also, informants indicated that ONS's property tax contributions have enabled the local governments to expand their public services while lowering property tax rates and that this has helped guide residential, commercial, and industrial land-use and development patterns in other parts of the county.

The plant's presence has had a positive effect on recruiting industries, but many felt that it did not have as large an effect on industrial development as it has on residential and recreational land uses. Most of the county's industrial development has occurred in the 15-km (9-mile) triangle between Seneca, Walhalla, and West Minster. This is because the county has installed the infrastructure necessary for industrial development (particularly sewer and water lines) in the area, and because the county's wastewater treatment facilities are located in the three towns that form the triangle. In terms of industrial recruitment, it was believed that companies who were interested in locating in Oconee County saw ONS (and the whole Keowee-Toxaway Project) as a stabilizing influence on the regional economy and as a reliable source of electric power. Sources felt that with the combination of a stable economy, a reliable power source, relatively low property tax rates, and the installation of infrastructure industries needed, Oconee County had been able to attract a number of desirable industries in the past two decades. These attractive benefits are mainly because of ONS and the Keowee-Toxaway Project. Overall, respondents felt that ONS's operation, in terms of the benefits that the station provides, has had positive impacts on land-use and development patterns in Oconee County.

C.4.5.5.2 Predicted Impacts of License Renewal

The direct land-use impacts of ONS's refurbishment and license renewal term on property in the immediate vicinity of the plant and on Oconee County are expected to be small. Using the bounding case work-force scenario, refurbishment-related population growth is projected to represent approximately 0.7 percent of Oconee County's projected population in 2013. Population growth associated with the license renewal term is projected to account for less than 0.1 percent of

the county's projected 2013 population. Such small increases during refurbishment and the license renewal term are likely to have minimal new impacts in terms of residential development patterns.

As in the past, the plant itself is not expected to attract or discourage new residential development directly. Sources agree that residential construction, particularly of higher-priced resort and retirement communities, would continue on Lake Keowee despite ONS's presence because of the amenities the lake offers. Also, it is likely that recreational land uses would continue to flourish near Lake Keowee because recreation and tourism play a big role in Oconee County's overall economic development picture. In general, however, the direct land-use impacts of ONS's refurbishment and license renewal term would be small.

In terms of land use, the new indirect impacts of ONS's license renewal term are expected to be moderate. The effects of license renewal would probably be greater than the direct impacts of the plant's refurbishment and comparable to the indirect impacts of operations under the original 40-year license. ONS's property tax contributions would continue to help local governments improve and expand their municipal services, further defining the county's residential, commercial, and industrial land-use and development pattern. Residential land use is expected to continue north of Seneca near Lake Keowee as sewer and water lines are extended beyond the city's boundaries. Industrial and commercial growth is expected to continue along Highway 123 in the triangle between Seneca, Walhalla, and West Minster. Because ONS helps promote the region's economic stability, provides a reliable source of power, and allows the county to lower property tax rates while expanding services, it also would continue to be an asset in recruiting industries to the area. Overall, the new indirect land use impacts of ONS's license renewal term are likely to be similar to the impacts that the plant has had during operations thus far.

C.4.5.6 Economic Structure

C.4.5.6.1 Impacts from Plant Construction and Operation

The construction and operation of ONS have resulted in insignificant and noticeable impacts, respectively, on Oconee County. The plant has directly increased employment and income for residents of the county engaged in its construction and operation. Also, direct employment and income have resulted in indirect employment and income, and the plant's tax payments have helped provide the infrastructure for attracting business into the county.

Table C.65 presents the estimated employment and expenditure effects of ONS for residents of Oconee County. In 1971, construction activity was at a peak, and by 1978 the plant was in full operation. However, total employment related to the plant almost tripled between 1978 and 1989. Thus, the economic impact from employment and income generated by ONS has increased over time, as the percentages of county employment and income provided by the plant have become greater.

C.4.5.6.2 Predicted Impacts of License Renewal

The main impact of license renewal at ONS would be the continued employment benefits of the plant's operation. The size of the benefits should be similar to those that existed in 1989, but the relative importance of the benefits is expected to decline as Oconee County's economy is projected to grow in other sectors.

The work force scenario detailed in Section C.3.1 was used to estimate the employment effects of refurbishment at ONS. Table C.66 shows the total direct and indirect plant-related employment of Oconee County residents during refurbishment. It is projected that ONS would employ 577 Oconee County residents as refurbishment workers in 2012 (Section C.4.5.1.2). Indirect employment that would result from purchases of goods and services during refurbishment is projected to create 118 jobs for Oconee County residents. Total refurbishment-related direct and indirect employment, therefore, is expected to be 695 in 2012. This represents 1.9 percent of the county's projected 2012 total employment, resulting in small impacts.

Relatively few new plant-related jobs would be created at ONS during the license renewal term. Nearly all plant-related employment (and associated impacts) expected during that time period would represent a continuation of employment

(and impacts) from past operations. Table C.67 shows the impact of the increased labor requirements at ONS during the license renewal term.

The license renewal term work force for ONS would require an estimated 180 additional employees (Section C.4.5.1.2). Of the additional workers, 90 are projected to be Oconee County residents. An estimated 74 indirect jobs would also be created for county residents during the license renewal term. With the continued effects of the plant's current employment and the additional employment to be created, total direct and indirect license renewal term employment of Oconee County residents is projected to be 1314, or 3.6 percent of Oconee County's projected employment in 2013. This represents a small impact.

C.4.5.7 Historic and Aesthetic Resources

This section describes the impacts that the construction and operation of ONS Units 1, 2, and 3 have had on historic and aesthetic resources and projects the expected impacts of the station's refurbishment and postlicensing operations. Information sources include the Final Environmental Statement Related to the Operation of Oconee Nuclear Station, Units 1, 2, and 3 (AEC Dockets 50-269, 50-270, and 50-287) and interviews with key individuals in Oconee County and Pickens County, South Carolina.

C.4.5.7.1 Impacts from Plant Construction and Operation

Lake Keowee, with 7490 ha (18,500 acres) and 480 km (300 miles) of shoreline, was created from 1968 to 1971 by the licensee to serve the cooling requirements of ONS, with ancillary use as a hydroelectric power facility, a site for fish propagation, and a recreation and sports facility. The lake covers a land area that formerly included the site of Old Fort Prince George (an early British outpost) and the site of old Keoweetown (headquarters of the lower Cherokee Nation). Before the impoundment of the lake, extensive archaeological diggings were made at these two sites (AEC Dockets 50-269, 50-270, and 50-287). Artifacts found are now in the possession of state and local museums. While funds were made available for more site investigations, archaeologists were unable to complete all studies of the historic and prehistoric resources before the area was inundated. Some unexplored resources were lost. All graves and cemeteries in the areas inundated by the lake were moved to new locations, as was a covered bridge that crossed the Keowee River. The licensee also moved the Alexander Hill House (an early- nineteenth-century structure) from its original site, which would have been right below the new dam, to a county park on Lake Keowee. No properties other than these were listed on the National Register of Historic Places. The state liaison officer for historic preservation had no comment on the construction and operation of the nuclear power plant.

One source believes that the aesthetic impacts from construction and operation of the power plant are more positive than negative. The licensee has developed Keowee Keys, an upscale retirement community on the new Lake Keowee, the Foothills Hiking Trail [a 130-km (80-mile) national trail], the new Devil's Fork State Park, the Keowee-Toxaway State Park, and the World of Energy visitor's center at the nuclear power plant. The source believes that the area looks better since construction of the lakes and that the development of the new residential communities has given a positive image to an area that previously was characterized by low-productivity farms and small woodlots in a rural hilly area of the Piedmont Crescent where the southern Blue Ridge Mountains join the Piedmont.

C.4.5.7.2 Predicted Impacts of License Renewal

The impacts of refurbishment of the Oconee power plant on local historic and aesthetic resources are projected to be much less than those experienced during the original construction of the plant. Original construction involved inundation of 7,000 ha (17,000 acres) of land and conversion of rural, low-intensity agricultural lands to residential and recreational uses. Some historic and prehistoric resources were lost or at least relocated from their original landscape settings during the flooding for development of Lake Keowee. None of these impacts would recur with refurbishment. Such land conversion and land-use change are not expected to result from refurbishment or license renewal term operations. The impacts of post-relicensing operations are likely to be a continuation of the small impacts experienced

during the original operating period. However, determination of impacts to historic resources must be made through consultation with the SHPO.

C.4.6 Three Mile Island

The impact area--the area in which the most pronounced socioeconomic impacts might result from refurbishment and license renewal--at Three Mile Island (TMI), consists of Londonderry Township and the boroughs of Middletown and Royalton in Dauphin County, Pennsylvania. The selection of this area is based on worker residence patterns, employment, expenditures, and tax payments. Figure C.14 depicts the impact area, and Figure C.15 shows the region in which it is located.

C.4.6.1 Population

This section discusses the local population growth associated with the construction, operation, and license renewal of TMI. Dauphin County was not chosen as part of the study area because plant-related growth has had little effect on the county's total population relative to the plant's effect in the local jurisdictions. Section C.4.1 describes the methodology used to project population growth for all plants. Data used to prepare this section were obtained from Socioeconomic Impacts of Nuclear Generating Stations: Three Mile Island Case Study (NUREG/CR-2749, vol. 12); Environmental Assessment for Proposed Rule on Nuclear Power Plant License Renewal (NUREG-1398); SEA refurbishment work force estimates (Appendix B; SEA 1994); population projections by the Pennsylvania State Data Center (1990); and the General Public Utilities Corporation (GPU 1990).

The discussion of population growth is organized into two time periods. Section C.4.6.1.1 identifies the population growth that the study area has experienced as a result of the construction and operation of TMI from 1968 to 1990. Section C.4.6.1.2 projects the population growth expected to result from the refurbishment period and license renewal term operations of TMI Unit 1 beginning in 2014, based on the growth associated with the plant's initial construction. Also, Section C.4.6.1.2 projects the population growth expected to result from TMI's license renewal term, based on the growth associated with operations in the past.

C.4.6.1.1 Growth Resulting from Plant Construction and Operation

TMI's construction resulted in noticeable population increases in Londonderry Township, Middletown, and Royalton (Table C.68). During the peak construction year, 1972, TMI personnel and their families who migrated to the area to work at the plant, and others who moved into the area to work in jobs generated by the plant's presence, totalled approximately 310 persons. This influx of new residents represented 2.2 percent of the study area's total population in 1972.

Figure C.14 Socioeconomic impact area associated with Three Mile Island refurbishment: Middletown, Royalton, and Londonderry Township.

Figure C.15 Region surrounding the Three Mile Island nuclear plant.

Operations at TMI have resulted in smaller population increases than did the plant's construction. In 1990, 1086 permanent plant staff were on-site at TMI (additional contract workers have been on-site during outages, but they have not been included because their presence at the plant was temporary). Of the permanent plant staff, 23 percent (250) reside in the study area (GPU 1990). Based on the residential settlement pattern of TMI's 1978 work force, it is estimated that 195 (78 percent) of those residing in the study area in 1990 were prior residents who obtained operations jobs and that 55 (22 percent) were workers who have migrated into the area for jobs (Table C.69). Also following the pattern set during plant operations, it is assumed that all of the in-migrants were accompanied by their families. Assuming the 1990 Pennsylvania average family size of 3.1 persons, this represents a total in-migration of 171 new residents for the study area. Based on the distribution of nonplant jobs created in the study area in 1978, it is projected that TMI's 1990 operations created an additional 115 indirect jobs in service industries supported by the spending of TMI workers. As a result of these indirect jobs, an estimated 33 additional workers and their families (a total of 75

persons) moved into the study area (Table C.69). In all, it is estimated that approximately 246 new residents moved into the study area as a result of TMI's 1990 operations. These new residents make up about 1.7 percent of the study area's 1990 population of 14,636 (NUREG/CR-2749, vol. 12, pp. 66-78; U.S. Bureau of the Census 1990).

C.4.6.1.2 Predicted Growth Resulting from License Renewal

As discussed in Section C.3.1, TMI's license renewal would require the completion of a number of refurbishment tasks for Unit 1. Many of the refurbishment tasks are expected to be completed during scheduled refueling outages during the 10 years that precede expiration of the initial operating license. However, the final refurbishment work is expected to be completed during one large refurbishment outage in 2013, the year before the initial operating license expires. As this final refurbishment outage would involve more workers on-site over a longer period of time than any of the preceding refueling outages, it represents the peak refurbishment period for TMI Unit 1. However, because uncertainties exist concerning the length of the outage and the size of the work force required to complete the refurbishment of a given unit, this section examines a bounding case work force scenario as described in Sections C.3.1 and C.4.1.1.2.

Given the work force scenario detailed in Section C.3.1, it is estimated that 2273 workers would be on-site to complete refurbishment of TMI Unit 1 in 2013 (SEA 1994). Further, assuming that the residential distribution of refurbishment workers would be similar to that of the 1972 TMI construction work force, it is estimated that 8 percent (182) would reside in the study area. Based on plant construction experience, it is projected that 28 percent (51) of those residing in the study area would be prior residents who obtain refurbishment jobs and that 72 percent (131) would be workers who migrate into the area for refurbishment jobs (Table C.70). Also following the pattern set during plant construction, 9 percent of the in-migrants (12) would be accompanied by families. Using the Pennsylvania average family size of 3.1 persons, total refurbishment worker in-migration would result in 156 new residents for the study area.

Based on the ratio of nonplant jobs created in the study area in 1972, TMI's refurbishment is projected to create an additional 50 indirect jobs in service industries supported by the spending of TMI refurbishment workers. As a result of these indirect jobs, an estimated 14 additional workers and their families (a total of 33 persons) would be projected to move into the study area (Table C.70). In all, approximately 189 new residents would be expected to move into the study area as a result of TMI's refurbishment under the work force scenario. That would represent 1.0 percent of the study area's projected population of 18,223 in 2014 (NUREG/CR-2749, vol. 12, pp. 50- 55, 74-76).

Once plant refurbishment is completed for TMI Unit 1, the work force would consist mostly of permanent plant staff. Additional refurbishment/refueling workers would be temporarily on-site approximately every 2 years; however, they would not be permanent, on-site plant staff, and many of them are expected to commute from outside the study area. It is expected that a maximum of 60 additional permanent workers would be required to operate the relicensed unit. Assuming that the new workers' residential distribution would be the same as the current plant staff's, approximately 23 percent (14) would reside in the study area. Based on worker in-migration in 1978, it is expected that 78 percent (11) of those residing in the study area would be prior residents who obtain jobs and that 22 percent (3) would be workers who migrate into the area for jobs (Table C.71). Also following the pattern set during plant operations, it is assumed that all of the in-migrants would be accompanied by their families. Using the Pennsylvania average family size of 3.1 people, total in-migration would result in 9 new residents for the study area. Based on the ratio of nonplant jobs created in the study area in 1978, TMI's license renewal term is projected to create an additional 6 indirect jobs in service industries supported by the spending of plant workers. As a result of these indirect jobs, an estimated 2 additional workers (one with a family, for a total of about 4 persons) would be projected to move into the study area (Table C.71). In all, approximately 13 new residents would be expected to move into the study area as a result of TMI's license renewal term. That would represent less than 0.1 percent of the study area's projected population in 2014 (NUREG/CR-2749, vol. 12, pp. 58-60, 76).

C.4.6.2 Housing

The following sections examine the housing impacts that occurred in Middletown, Londonderry Township, and Royalton during construction and operation of TMI and predict housing impacts that would result from refurbishment activities and continued operation. Possible impacts to housing include changes in the number of housing units, particularly the rate of growth of the housing stock; changes in occupancy rates; changes in the characteristics of the housing stock; and changes in rental rates or property values.

Section C.4.1.2 includes a complete discussion of methodology and assumptions used to predict housing impacts.

C.4.6.2.1 Impacts from Plant Construction and Operation

The following discussion begins with a description of the housing market at the time of TMI's construction and details project-related housing demand in the study area. A discussion of changes that occurred in the housing market and plant construction-induced impacts on housing follows. Finally, impacts from the operation of TMI on local housing are assessed.

Between 1970 and 1978, when construction at TMI was completed, building permits were issued for 1364 units in Londonderry Township, Middletown, and Royalton combined. Of these new units, 1113 were in Middletown, 238 in Londonderry, and only 13 in Royalton (NUREG/CR-2749, vol. 12). The majority of new units in Middletown were multifamily units, including two low-income projects, a very large (>700 units) development called Village of Pineford, and the conversion of old homes into apartments. New units in Londonderry were mostly single-family units. These additional units made up a 30 percent increase in the 1970 housing stock and marked a turnaround in the declining growth that had been experienced before 1970. In the intercensal period 1960- 70, the housing stock decreased by more than 400 units, a decline largely attributed to the closing of Olmstead Air Force Base (NUREG/CR-2749, vol. 12).

Project-related demand for housing in the study area has been estimated according to the number of plant construction and operations workers who moved to the area (NUREG/CR-2749, vol. 12). During 1972, the average annual project-related work force peaked at 2746, resulting in a demand for 146 units in the study area. This demand is the equivalent of 2.8 percent of the 5190 housing units in the study area in 1972.

The study area housing stock was expanding much faster than project-related demand. There were 55 rental units and 22 for-sale units vacant in 1970 in Middletown (U.S. Bureau of the Census 1972). In 1970 and 1971, over 600 multifamily units were added to the Middletown housing stock, while Londonderry experienced an increase of 39 multifamily units (NUREG/CR-2749, vol. 12). The construction of the multifamily units in Middletown (the Village of Pineford), it appears, had little to do with project-related demand. After construction of TMI was completed, the vacancy rate of this development did not increase (NUREG/CR-2749, vol. 12).

Another change in the housing stock was the development of five mobile home parks in Londonderry Township in the early 1970s. Some in the area saw a conspicuous association between the mobile home parks and the construction of TMI, though three of the park owners reported that they never had more than six TMI workers located in their parks (NUREG/CR-2749, vol. 12).

Property values and rental rates are not believed to have been affected by TMI construction. Increases in rates or values were no greater than the overall inflation rate. Between 1970 and 1980, housing values increased 187 percent in Middletown and the state of Pennsylvania. However, rental rates in Middletown increased 200 percent, whereas a 75 percent increase occurred in Pennsylvania. The numerous new rental units that were added to Middletown's housing market between 1970 and 1980 were a primary cause for the increase in rental rates.

Although discernible changes in the housing market and in housing values and rental rates did occur during the construction period of TMI, it appears that TMI had little do to with these changes. In summary, construction of TMI had only an insignificant effect on housing.

Because of the 1979 accident at TMI Unit 2, there has been unique potential for impacts to housing in the surrounding area. Possible impacts resulting from the occurrence and aftermath of the accident might include changes in housing value and in patterns of housing development. Most realtors and planners contacted in the course of this research agreed that normal operation of the TMI units had no effect on housing development or values. One thought that residential development had been encouraged by the permanent location of operations workers in the area, whereas another thought that residential development that had been occurring on the east bank of the Susquehanna River slowed when the plant began operations.

Most informants reported that any negative effects from the accident at TMI Unit 2 on the housing market were short-lived if at all existent. Construction of a townhouse development in Lower Swatara Township (neighboring Londonderry) ceased as a result of the accident, and the developer did not resume the project. Although one informant cites TMI and the accident as the most likely reason for the absence of development in the area near the plant, another believes a more likely reason is the lack of public sewer and water service there. The number of building permits issued in the study area followed the trend occurring throughout the Harrisburg Standard Metropolitan Statistical Area. The trend in this three-county area was a decrease in the number of building permits issued between 1978 and 1979 and between 1979 and 1980, followed by an increase in permits between 1980 and 1981 (TCRPC 1982). Londonderry Township followed this trend closely but did not experience an increase in permitting until 1982. Middletown, on the other hand, experienced an increase in building permits both in 1980 (22 percent more than those issued in 1979) and 1981 (27 percent more than those issued in 1980).

Immediately after the accident, some home buyers from outside the local area were averse to living near TMI. This was the case particularly with homes that looked out over the cooling towers. This resulted in longer selling time for these homes. In only a few instances have homeowners sold or tried to sell their residences because of the TMI accident.

Opinions differ regarding the effect of the TMI accident on housing values. Some local realtors and planners believed that there had been no effect. Another realtor, whose business is primarily in Middletown and Londonderry Township, reported that values of houses and property in two small subdivisions (30 to 50 homes each) close to the plant had been affected negatively by the accident at Unit 2. Housing values there dipped below fair market price for a period of approximately 5 years, although these homes are now selling at fair market price. Another respondent believed that values of homes in close proximity to the plant had not kept pace with the value of homes in other areas of Middletown.

In summary, the accident's effects on housing values were minor and of short duration. Similarly, effects on housing development were minor; the cancellation of the townhouse development project (noted above) because of the TMI accident was an isolated case.

C.4.6.2.2 Predicted Impacts of License Renewal

Project-related population increase and the commensurate housing demand would be the cause of housing impacts during refurbishment activities. A summary of recent and anticipated growth in housing is provided below. This is followed by predictions of possible impacts during refurbishment and the license renewal term.

Housing in Londonderry Township, Middletown, and Royalton expanded between 1980 and 1988 at an average annual rate of approximately 0.5 percent (U.S. Bureau of the Census 1982; Dauphin County Planning Commission 1988). If expansion continued at this rate, there would be 7376 housing units in 2013, the peak year of refurbishment at TMI Unit 1. The projected population of the study area in 2013 is 17,091 (Section C.4.6.1) and will require 6975 housing units. Although adjustment in housing growth will be made according to population growth, the current rate of growth suggests that there will be housing available in the study area during refurbishment activities.

According to the estimate of the number of refurbishment workers required and based on plant construction experience, 131 workers of the 273-member work force are expected to migrate to the area for refurbishment jobs. Of these in-migrants, only 12 are expected to be accompanied by families. Some doubling-up is expected to occur among the 119

unaccompanied workers, so that each unaccompanied mover would require 0.85 housing unit. The in-migration of these refurbishment workers would result in a housing demand in the study area of 113 housing units. In addition, some indirect jobs would be created by the spending of refurbishment workers. An additional 11 workers are expected to move to the study area, bringing the total project-related housing demand to 124 units.

Refurbishment-related housing demand is less than the original construction-related housing demand of 146 units, and the number of housing units in the study area would have increased 42 percent between peak construction and refurbishment periods. Refurbishment-related housing demand would account for 1.7 percent of the possible 7376 housing units in the study area in 2013. Because demand would be small relative to the projected housing market and would be even less than that experienced during construction (when only small housing impacts occurred), new impacts to housing in the study area are expected to be small.

Housing impacts involving marketability and value expected during the license renewal term would be a continuation of current impacts (Section C.4.6.2.1). New impacts involving housing demand and availability caused by the additional 60 workers required during the license renewal term would be small.

C.4.6.3 Taxes

C.4.6.3.1 Impacts from Plant Construction and Operation

The construction of Unit 1 of TMI began in May 1968, with operation beginning in September 1974. Unit 2 construction began in November 1969, and its operations began in December 1978. In March 1979, a major accident at Unit 2 led to the permanent shutdown of this part of the facility.

The impacts of tax revenues from TMI on its surrounding municipalities and jurisdictions are minimal in that the Pennsylvania tax structure is designed so that local areas do not benefit directly from property taxes on electric generating facilities. In general, the operation of TMI has had insignificant effects of taxing jurisdictions in the area because these local municipalities did not receive direct property tax payments. This is not the case in most other power plant locations in the United States. The Public Utility Realty Tax Assessment of 1970 (PURTA) imposed an annual tax on the depreciated cost of utility real estate at a rate of 30 mills per $1,000 of assessed valuation. The state distributes to each locality throughout the state an amount proportional to its share of all property taxes collected in the state.

The PURTA taxes paid by General Public Utilities Corporation (GPU) for TMI increased from $1 million in 1970 to $5.8 million in 1978. With the removal of Unit 2 from operation in 1979, PURTA tax payments fell to $2.8 million in 1980. PURTA tax payments rose steadily in the 1980s to $3.2 million in 1985 and $4 million in 1989.

The boroughs (towns) nearest the TMI site are Middletown and Royalton (combined population of 10,000 in 1970 and 12,000 in 1990). The plant is located in Londonderry Township (population of 3453 in 1970 and 5500 in 1990), where there have been income-related tax collections that were a relatively high proportion of the total revenues of the township.

As shown in Table C.72, total revenue in Londonderry Township increased from $277,177 to $330,953 (1980 dollars) between 1980 and 1989; this amounts to a 19.4 percent increase. Occupational privilege taxes (place-of-work taxes) during the study period have been reduced sharply compared to the peak construction effort in the 1970s. The occupational privilege tax was at its peak in 1972 at $58,527 and fell steadily through 1989, when the tax was $13,255. This reduction reflects the decrease in the number of construction workers residing in the township. The PURTA tax distributions from the state are a very small fraction of total revenues for the township, ranging from a high (but still insignificant) contribution of only 1 percent to a low of 0.7 percent during the 1980s.

Earned income taxes have been the largest source of revenues for Londonderry Township. This tax is levied on all workers living in Londonderry Township. These tax receipts are especially large during construction periods, because workers residing in states other than Pennsylvania are required to pay the 1 percent tax to the township. For workers

who are residents of Pennsylvania, the tax is split evenly between the township and the school district in which the worker resides.

Middletown Borough

As can be seen from Table C.73, total revenues in the borough of Middletown have increased steadily in recent years, largely the result of the reselling to local residents of electricity purchased wholesale under a long-term contract with Metropolitan Edison. The borough's purchase contract with Metropolitan Edison is not contingent on the existence or operation of TMI.

Royalton Borough

In a contractual relationship similar to that of the borough of Middleton, the borough of Royalton has steadily increased its total revenues through a heavy reliance on the resale of electricity purchased from Metropolitan Edison (Table C.74).

Middletown Area and Lower Dauphin School Districts

The Middletown Area School District (MASD) and the Lower Dauphin School District (LDSD) are the major school districts in the TMI study area. Enrollments in the two school districts have declined steadily from the start of construction of Unit 1 in 1968 to the present. The LDSD enrollment was 4021 in 1968 and fell 16 percent, to 3385, in 1990. Enrollments in MASD declined from 3102 in 1968 to 2625 in 1990, for a decrease of 15.4 percent. Apparently, there has been no correlation between the work force at TMI and enrollment at the two school districts.

Mountain West Research, InC., estimated the project-related enrollment of the two school districts in 1978 to be 35 and 8 for MASD and LDSD, respectively (NUREG/CR- 2749, vol. 12). We estimate the current project-related enrollment to be 13 and 3, respectively, because of the drop in work force at the plant from 2872 in 1978 to 1086 in 1989.

Local taxes paid to the school districts are a combination of real estate taxes, a 0.5 percent earned income tax for residents of the school district, a per capita tax, a real estate transfer tax, and an occupation tax. In addition, the PURTA taxes are apportioned to the school districts in a way similar to those for municipalities. The contribution of taxes paid by TMI to the school districts is insignificant compared to the district's total revenues, with PURTA taxes alone currently accounting for less than 1 percent of the total taxes received for both school districts.

C.4.6.3.2 Predicted Impacts of License Renewal

During refurbishment of TMI, a new tax-related impact is expected to occur. This new impact involves increases in tax payments because of capital improvements that take place during the current term outages. Tax increases resulting from improvements made in the final refurbishment outage would affect taxes only during the license renewal term. The impact of the additional tax revenues would be small in the local jurisdictions because new revenue (i.e., the PURTA taxes) would be distributed statewide.

During the license renewal term, the primary tax-related impact would be the continuation of TMI's PURTA tax payments. A new impact would also result from the increase in tax payments resulting from improvements made at TMI Unit 1 during the final refurbishment period. Thus, total PURTA tax revenues would increase in absolute terms, although PURTA tax distribution to individual municipalities would continue to constitute only small portions of their total revenues.

C.4.6.4 Public Services

C.4.6.4.1 Impacts from Plant Construction and Operation

The construction and operation of TMI have coincided with a period of growth in southern Dauphin County, and with that growth have come greater revenues and expenditures. The presence of TMI affects the varying jurisdictions and their services differently; overall, the impacts have been greater on Londonderry Township than on Royalton and the two nearest school districts, and much more than on Middletown.

Middletown and Royalton are designated as boroughs, of which there are 16 in Dauphin County; the county also comprises 25 townships. A township is a subcounty area with the status of a legal municipality, originally established for administrative purposes, whereas boroughs are small towns within townships. Londonderry Township is governed by a three-member board of supervisors, elected at large, who serve in both legislative and executive capacities.

Both of the boroughs, Middletown and Royalton, have mayor-council governments. In Pennsylvania, townships and municipalities designated as boroughs have a high degree of administrative autonomy in several areas, such as the regulation of taxes (by determining millage rates, for example); structure of government, zoning, and planning policy; and provision of public services (NUREG/CR-2749, vol. 12, p. 91-93).

Information pertaining to revenues and expenditures is discussed in detail in Section C.4.3.3.

Education

Two school districts are in the study area, MASD and LDSD. Londonderry Township and three other townships make up LDSD, and about 32 percent of the students in that district reside in Londonderry Township. The only school in the township is Londonderry Elementary, and it is attended by Londonderry Township residents only. In 1972, its enrollment was 666 students, 32 percent of all elementary students in LDSD. During construction of TMI, enrollment in LDSD decreased, but the decline was erratic, following no regular trend. There is no evident correlation in the pattern of decline and the number of construction workers at TMI. Construction-related enrollment in LDSD was not very large, amounting to only 0.1 to 0.2 percent of all students in 1972-73 and 1978-79, respectively (NUREG/CR-2749, vol. 12, pp. 106-108).

A local respondent (Book 1990) reported insignificant effects of TMI's construction on district enrollment, and it was noted that employees were evenly distributed throughout the area. The most visible effect of TMI's construction was monetary, but the only real direct effect of the construction was a one-time real estate transfer tax of $250,000 collected by LDSD when Unit 2 changed hands from Jersey Central Power and Light to Metropolitan Edison (NUREG/CR-2749, vol. 12, p. 110).

Both Middletown and Royalton are part of MASD, which also includes neighboring Lower Swatara Township. Roughly 70 percent of the students in the district resided in the study area during construction, but the project-related enrollment was estimated to be only 1.0 to 1.2 percent of the total enrollment (33 to 35 students). An initial rise in enrollment occurred after construction began, but numbers declined steadily after 1972. An official of MASD confirmed that although TMI drew many people with school-aged children into the area, there was no stress put upon the school system (Strohecker 1990). As with LDSD, there does not appear to be any correlation between the pattern of decline and the number of construction workers at TMI (NUREG/CR-2749, vol. 12, p. 106).

Operations at TMI have also had insignificant impacts in the school districts. The accident in 1979 caused the schools to be closed down for a few days, and evacuation plans have also been developed following the accident. While many workers were involved in the clean-up effort, the presence of extra workers did not have an impact on the schools.

Transportation

During construction at TMI, there were moderate impacts on transportation in the study area. Increased traffic from the TMI work force created congestion and some inconvenience along Highway 441. However, it dissipated quickly because of the nearby interchanges with Interstate I 283. Along Geyer's Church Road and Highway 230, especially during shift changes, increased traffic was also noted. As Table C.75 shows, counts at the peak of construction, in 1972, were nearly twice the traffic levels of a decade earlier. Nevertheless, the TMI construction traffic was modest on

Highway 230 in comparison to the daily traffic generated by nearby Olmstead Air Force Base, which employed approximately 10,000 civilians before its closing (NUREG/CR-2749, vol. 12, p. 114). The impacts of operations at TMI on transportation have been insignificant. None of the informants reported a change in the demand on transportation since TMI began operations.

The effects of maintenance activities have been greater than those during normal operations but still not as large as at the time of construction. There is no indication that TMI traffic has had a substantial effect on road maintenance requirements or that it has changed long-term transportation patterns in the study area (NUREG/CR-2749, vol. 12, p. 114).

Public Safety

Each of the jurisdictions provides varied levels of public protection; in each, however, public safety services have improved because of the construction of TMI. Middletown's police force changed little during construction. Two police officers were added after 1974, raising the number to 18; the department budget rose accordingly. There was a consistent rise in the frequency of calls for service, but there was no evidence that construction work at TMI caused an increase in police activities (NUREG/CR-2749, vol. 12, p. 115). Royalton also maintains its own police department, which was a part-time force of two officers for most of the construction period; in extraordinary cases, it depends on state police forces or neighboring municipalities for assistance.

Unlike the boroughs, Londonderry Township has no police department, relying totally on the state police for protection. An informant at the Pennsylvania State Police Department stated that construction at TMI had no large impact on the services of his department.

Fire protection and rescue services have also improved in the study area. The three fire companies located in Middletown serve Middletown and Royalton boroughs and have separate specialties. Similarly, ambulance and emergency services for both are coordinated through a communications center located on the premises of the Middletown Police Department.

In 1974, near the end of construction, one of the fire companies moved to new housing that was federally funded, and all of the companies became more professional. Londonderry Township maintains its own fire department, and during the construction period it acquired an ambulance and rescue unit. Public safety expenditures experienced slow, steady growth through the construction period in Londonderry Township. However, those interviewed did not see any effects from TMI's construction on the demand for public safety (NUREG/CR-2749, vol. 12, pp. 115-117).

Municipalities are required to have a volunteer emergency management squad. The Dauphin County Emergency Management Office reported that squads were in place before TMI was built. In Middletown, the emergency squad remained small throughout the construction period. However, the Middletown squad is concerned with other facilities in addition to TMI, such as a chemical plant and railroads in the borough and the nearby Harrisburg International Airport. Additionally, an 8-km (5-mile) evacuation plan was developed.

Operations and refurbishments at TMI have definitely affected public safety in the study area, especially because of the demands on emergency management: the evacuation plan is now much more detailed. The police have also been affected, not so much by the plant's daily operations, according to the state police, as by the evacuation following the 1979 accident.

The mayor of Middletown reported that operations at the plant greatly affect the borough; its emergency management plan must be kept up to date and be in place for TMI to operate. The power company works closely with the municipalities to formulate their emergency evacuation plans, and it strives to maintain good public relations.

Social Services

No social or health services are provided by Londonderry Township or by the two boroughs. Social programs are run by the county or the state, and residents must go to Harrisburg to receive any of these services. The only social programs located in the study area are a day-care center for low-income working mothers (NUREG/CR-2749, vol. 12, p. 117) and some programs for senior citizens (Hoke 1990; Hamer 1990). No informant reported effects from TMI on demands or funding for social and health services during construction. Also, there were no reports of impacts from operations or refurbishments.

Public Utilities

Like social services, public utilities have experienced only insignificant impacts from TMI. Londonderry Township provides no water or sewerage treatment. The chairman of the Londonderry Township planning commission said that growth in the area could not be attributed to TMI. Middletown, which also produces and distributes its own electricity, does provide sewer, water, and sanitation services. Local informants were unsure whether there was any effect on public utilities during TMI's construction, but it is believed that effects were small.

Informants reported no increase in demand on public utilities since operations began. In fact, the Middletown planning commission chairman noticed a decrease in demand on services after TMI was completed and began operations. No reports indicated that refurbishments at TMI affect public utilities.

Tourism

Some positive impacts to local tourism were observed during construction. Most of the local leaders reported an increase in tourism in the study area during the construction of TMI, although some variation existed in their reports of its popularity. One noted that the visitor's center was established at that time and that the plant construction was an impressive sight and a strong attraction. However, tourism was already well established in the region, with several nationally popular sites, such as Lancaster County, Gettysburg, and Hershey. Additionally, Middletown is a historic community--the oldest in Dauphin County.

All of the local leaders interviewed noted that tourism at the plant has continued during its operation (especially after the accident in 1979). Although the plant had a slight effect on regional tourism, it has become a small tourist attraction in its own right, attracting visitors into the study area. Local leaders note no adverse effects from increased tourism.

Recreation

Effects on recreation in the study area have been small, although there have been substantial improvements in facilities. Several leaders interviewed stated that TMI's construction had no impact on recreation in the area, although funding rose in Middletown for parks and recreation.

Probably the biggest change in the study area has been in Londonderry Township, which spent several hundred thousand dollars from 1973 to 1975 to acquire land and develop a golf course (NUREG/CR-2749, vol. 12, pp. 103-104); another is under construction now. During the construction of TMI, several new parks were also established in Londonderry Township, but the township planning commission chairman pointed out that these were built to accommodate the needs of community residents already living in the township.

Operations at TMI have had some impacts. For example, a public boat launch and fishing pier have been built on the island. And despite the plant, recreation has grown on the Susquehanna River. A public boat launch and a boat club are in the vicinity.

C.4.6.4.2 Predicted Impacts of License Renewal

Based on the estimate of 2273 direct workers, 189 in-migrants (direct and indirect) would result from TMI's refurbishment (Section C.4.6.1.2). The 21 workers (direct and indirect) who are projected to migrate to the study area with their families will each bring an average of 0.79 school-age children for a total of 17 new school-age children.

This assumes an average family size of 3.1 and an even distribution of children from ages ?1 to 18. This small increase would have a small impact on area schools.

During the construction of TMI, impacts on social services, tourism, and recreation were small. Because refurbishment would bring in fewer workers than did initial construction and the population in the study area in 2013 would be larger, any impacts on these public services also would be small.

Public safety, which has been affected mostly by requirements for emergency plans and increased funding, also should experience small effects during the refurbishment period. Public utilities, which were not affected by the construction of TMI, would not be affected by its refurbishment. There would be, however, new changes concurrent with and indirectly related to the plant's continued operations, as Londonderry Township plans to build additional water and sewer systems in the next 30 years or so.

Transportation, which was affected moderately during the construction of TMI, would probably experience effects similar to those that occurred during construction because the operations and refurbishment work force combined would be somewhat larger than the construction force. The combined effects of the operations and refurbishment work forces are likely to create a moderate impact. Transportation impacts of license renewal term operations will be much the same as the small impacts occurring currently.

For all public services, impacts during the license renewal term would be essentially unchanged from those experienced during past operations. This means that impacts are expected to be small for all services.

C.4.6.5 Off-Site Land Use

This section describes the off-site land-use impacts of the construction, operation, and license renewal of TMI. The discussion of impacts is concerned primarily with land use in the immediate vicinity of the plant, but impacts for Middletown, Royalton, and Londonderry Township are described where appropriate. Land-use impacts are examined for two time periods. First, Section C.4.6.5.1 identifies the land-use impacts of TMI's construction and operation. Next, Section C.4.6.5.2 projects the land-use impacts of TMI's refurbishment period, based on the impacts that occurred during the plant's construction. Also, Section C.4.6.5.2 projects the land-use impacts of the plant's license renewal term based on the impacts that have occurred during operations. Information sources for this report include the Final Environmental Statement Related to Operation of Three Mile Island Nuclear Station, Units 1 and 2 (AEC Dockets 50-289 and 50-320); Socioeconomic Impacts of Nuclear Generating Stations: Three Mile Island Case Study (NUREG/CR-2749, vol. 12); and interviews with key sources in Dauphin County. Section C.4.1.5 describes the methods used to assess and project land-use impacts for all case study plants.

C.4.6.5.1 Impacts from Plant Construction and Operation

TMI was constructed on an 80-ha (200-acre) site on Three Mile Island, a 191-ha (472-acre) island in the Susquehanna River near Middletown. The Metropolitan Edison Company had owned the island since 1906 and had acquired several of the surrounding islands by the time TMI's construction began in 1967. Before the plant's construction, more than half the island had been leased for farming, and much of the remaining land was wooded. There were also 70 rental cabins, a picnic area, and a boat dock on the island (AEC Dockets 50-289 and 50-320; NUREG/CR-2749, vol. 12).

Overall, TMI's construction had insignificant land-use impacts in the immediate vicinity because the direct impacts of construction were almost completely confined to the island. Most of the 80-ha (200-acre) plant site had previously been cleared for agricultural use, and only 11 ha (28 acres) of additional wooded area had to be cleared. All but 2 of the 70 cabins that were on the island before construction were moved to nearby Beshore Island. Because the cabins belonged to the Metropolitan Edison Company, their removal did not entail relocating permanent residents. A small section of state-owned Sandy Beach Island was affected by the construction of piers for the bridge erected from TMI to Highway 441. On the river's east bank, Metropolitan Edison purchased 3 ha (8 acres) of farmland (which included three farmhouses) to construct the visitor's center and 0.8 ha (2 acres) of woodland to construct a substation. In general, these

off-site construction activities had only insignificant effects on land use in the island's vicinity (AEC Dockets 50-289 and 50-320; NUREG/CR-2749, vol. 12).

TMI's construction had even fewer land-use impacts in Middletown, Royalton, and Londonderry Township. When the plant's construction began, Middletown and Royalton were small, older urban residential areas with some limited commercial and industrial development. Londonderry Township was predominantly rural, with scattered farmhouses and some very limited suburban residential development. Some residential construction occurred, in part because of the influx of construction workers, but key informants indicated that the growth was not significant enough to affect the area's general residential development pattern. The respondents felt that, overall, TMI's construction had neither positive nor negative land-use impacts in any of the three communities.

TMI's operation, including the 1979 accident at Unit 2, also has had relatively insignificant direct and indirect land-use impacts in the study area. Key sources stated that even after the accident the plant's presence had not been a deterrent to residential development along the Susquehanna River near the island, or in Middletown, Royalton, or Londonderry Township. Respondents believe that the plant has had neither positive nor negative impacts in terms of attracting industries to the area and that it has had only minor indirect effects in fostering positive commercial development. In general, land use in the area from Middletown south to Marietta along the east bank of the Susquehanna has not changed significantly since before TMI's construction. However, sources attributed this lack of residential, commercial, and industrial development to a number of factors other than TMI's presence. Some of the more important factors included the following: (1) Middletown and Royalton were already "built up," and little land was available for new development in either jurisdiction; (2) Londonderry Township did not provide the public sewer and water services necessary for large-scale development; (3) the general size and condition of the area's roads were inadequate to support industrial development; and (4) the region was experiencing an economic decline related to a downturn in the steel industry and the closing of the Bethlehem plant in Steelton. Overall, sources agreed that TMI's operations have had only very minor land-use impacts in the vicinity of TMI or in Middletown, Royalton, or Londonderry Township.

C.4.6.5.2 Predicted Impacts of License Renewal

The direct impacts of TMI's refurbishment and license renewal term on land use in the immediate vicinity of TMI and in Middletown, Royalton, and Londonderry Township are expected to be small. The plant itself is not expected to attract or discourage new residential, commercial, or industrial development directly. Refurbishment-related population growth is projected to represent 1.0 percent of the study area's projected population in 2014. The license renewal term is projected to result in population growth of less than 0.1 percent in the study area in 2014. During both refurbishment and the license renewal term, increases this small are likely to have only minimal new impacts in terms of residential development patterns.

Key information sources agree that land-use patterns in Middletown and Royalton are well-established and that the area has a general lack of developable land. Therefore, TMI's license renewal is expected to have only minimal new impacts on the two jurisdictions' land use. Growth is expected in Londonderry Township, as the township plans to extend its sewer and water services to allow for (1) residential and commercial development along Route 230 and (2) commercial and industrial development near Interstate 283 and at the southern end of the township near Conewago Creek. TMI's refurbishment might contribute slightly to this growth, but the township's land-use and development patterns are not likely to be strongly influenced either positively or negatively.

Because Pennsylvania state law provides for the statewide distribution of public utilities' property tax payments, Londonderry Township does not receive a disproportionate share of the benefit from TMI's tax payments. Thus, the township's land-use and development patterns are influenced less by the indirect effects of a nuclear plant's tax payments (i.e., lower property taxes and superior public services) than are those of jurisdictions that receive the majority of the tax benefits of a nuclear plant in some other states. In general, then, both the direct and indirect land-use impacts of TMI's refurbishment and license renewal term are expected to be small.

C.4.6.6 Economic Structure

C.4.6.6.1 Impacts from Plant Construction and Operation

The construction and operation of TMI have resulted in insignificant and significant impacts, respectively, on Middletown, Royalton, and Londonderry Township. Table C.76 presents the estimated employment and expenditures for residents of the three-municipality study from 1972 to 1990. In 1972, direct and indirect employment resulting from TMI's construction represented only 2.1 percent of the study area's total employment. That represents an insignificant impact.

The 1990 work force at TMI numbered 1086, of whom 250 were study area residents. The operation of the plant has also resulted in 98 indirect jobs, for a total of 348 jobs for study area residents. This level of employment represented 13 percent of the study area's total employment, so the impact is large. The income of this work force represented 17.0 percent of the study area's total income in 1990.

C.4.6.6.2 Predicted Impacts of License Renewal

The work force scenario detailed in Section C.3.1 was used to estimate the employment and economic effects of refurbishment at TMI. Table C.77 shows the total direct and indirect plant-related employment of study area residents during refurbishment.

It is projected that TMI would employ 182 study area residents as refurbishment workers in 2013 (Section C.4.6.1.2). In addition, indirect employment that would result from purchases of goods and services during refurbishment is projected to create 43 jobs for study area residents. The total direct and indirect employment affecting the study area during the peak refurbishment year is therefore estimated to be 225. This employment is projected to be 6.0 percent of the total study area work force in 2013, resulting in moderate impacts.

Relatively few new plant-related jobs would be created at TMI during the license renewal term. Nearly all plant-related employment (and associated impacts) expected during that time period would represent a continuation of employment (and impacts) from past operations. Table C.78 shows the impact of the increased labor requirements at TMI.

The license renewal term work force for TMI would require an estimated 60 additional employees (Section C.4.1.2). Of these additional workers, 14 are projected to be study area residents. An estimated six indirect jobs are projected to be created by license renewal, and five of these jobs are expected to be filled by study area residents. With the continued effects of the plant's current employment and the additional employment to be created, total direct and indirect license renewal term employment is projected to represent 9.8 percent of study area employment in 2013. This employment level represents a large impact.

C.4.6.7 Historic and Aesthetic Resources

This section describes the impacts that the construction and operation of the TMI nuclear station have had on historic and aesthetic resources and projects the expected impacts of the plant's refurbishment and post-relicensing operations. Information sources include the Final Environmental Statement Related to the Operation of Three Mile Island Nuclear Station, Units 1 and 2 (AEC Dockets 50-289 and 50-320); the Draft Supplement to the Final Environmental Statement Related to the Operation of Three Mile Island Nuclear Station, Unit 2 (NUREG-0066); and key information sources from Dauphin County, York County, and elsewhere in Pennsylvania.

C.4.6.7.1 Impacts from Plant Construction and Operation

The construction and operation of TMI have had moderate impacts on the aesthetic resources of the area and small impacts on the historic resources of its surroundings. There were no known archaeological sites on the island before construction. A preconstruction survey turned up artifacts from the Early and Middle Woodland Indian cultures of about 4000 B.C. to 1000 A.D. and some from later times. It was these Early and Middle Woodlands artifacts that were

of interest to archaeologists because these eras in Pennsylvania are poorly known (AEC Dockets 50-289 and 50-320). There have been no important impacts to historic structures from the construction and operation of the plant. Fourteen structures listed on the National Register of Historic Places are located within 1.6 km (1 mile) of the plant's 770 ha (1900 acres) of transmission line rights-of-way, but there have been no reports of any impacts (NUREG-0066). The impacts to historic resources that have occurred involve perceptions that the site has changed from a rural area of rolling eighteenth- and nineteenth-century farmsteads to one punctuated with industrial facilities. The perception of this intrusion is made across substantial distances because of the facility's three 110-m-high (370-ft-high) natural draft cooling towers.

The cooling towers and their visible plumes also create the facility's primary aesthetic impacts. One respondent states: "The principal impacts would be visual. ? The towers and the power lines are an intrusion on the rural landscape. Looking at the rural landscape as a part of the historic environment, with all the eighteenth- and nineteenth-century farmhouses, the facilities have a visual impact. There are other types of power plants along the Susquehanna, but they are smaller and not nearly as visible. The steam is an even greater identifier of the plant. You can see it from further away than the towers. And the power lines that come from the station are very visible." At river level (where the visitor's center and a major area highway are), existing trees for the most part obscure a view of the plant's other structures.

The other major aesthetic impact comes from the feelings that persist regarding the accident at TMI in 1979. Such feelings have to some degree colored people's attitudes about nuclear power and therefore their aesthetic perceptions. One source stated: "It's not that the plant's unsightly, it's just that the sight of the plant reminds people of the accident. The area around the plant is in a very sylvan setting, in really pretty countryside with lots of old farmhouses, until you see the plant. When you see the towers over the horizon, it puts people off." Another person referred to the cooling towers as "looming on the horizon for a good distance." One respondent suggested that, all thing being equal, home buyers since the accident have generally made decisions to purchase property out of the viewshed of the plant and that new construction of higher-valued homes has generally not favored areas near the plant. This individual posits that decisions to locate outside the viewshed are probably made more with an eye to optimizing the investment aspect of the property (reduction of risk to property values from another accident) than with concerns about the direct aesthetic impact of the plant and other development in the area on the perceived day-to-day quality of life.

C.4.6.7.2 Predicted Impacts of License Renewal

The impacts of TMI's refurbishment and postlicense renewal operation on historic and aesthetic resources in the area would likely be less pronounced than those that have occurred during construction and normal operation. The 1979 accident sensitized many people to the plant's presence and to its potential for problems. This undoubtedly has affected people's aesthetic preferences and values. Should another major problem occur at this plant (or, possibly, elsewhere), large aesthetic impacts can be expected because the cooling towers and their plumes remind people of the nuclear power plant's presence. Given normal operation during the license renewal term, impacts on aesthetic and historic resources are expected to be a continuation of the current levels of impact. However, determination of impacts to historic resources from refurbishment and license renewal operations must be made through consultation with the SHPO.

C.4.7 Wolf Creek

The impact area--the area in which the most pronounced socioeconomic impacts might result from refurbishment and license renewal--at the Wolf Creek Generating Station (WCGS), consists of Coffey County and towns and communities within Coffey County, Kansas, the largest of which is Burlington. The selection of this area is based on worker residence patterns, employment, expenditures, and tax payments. Figure C.16 depicts the impact area, and Figure C.17 shows the region in which it is located.

C.4.7.1 Population

This section discusses the local population growth associated with the construction, operation, and license renewal of WCGS. Section C.4.1 describes the methodology used to project population growth for all plants. Data used to prepare this section were obtained from the Final Environmental Statement Related to the Operation of the Wolf Creek Generating Station, Unit No. 1 (NUREG-0878); Environmental Assessment for Proposed Rule on Nuclear Plant License Renewal (NUREG-1398); SEA refurbishment work force estimates (Appendix B; SEA 1994); population projections by the University of Kansas Institute for Public Policy and Business Research (Helyar); and the Wolf Creek Nuclear Operating Corporation.

Figure C.16 Socioeconomic impact area associated with Wolf Creek Generating Station refurbishment: Coffey County.

Figure C.17 Region surrounding the Wolf Creek Generating Station nuclear plant.

C.4.7.1.1 Growth Resulting from Plant Construction and Operation

Because Wolf Creek was not included in the NUREG/CR-2749 study, estimates of worker in-migration are based on the construction experience at other nuclear plants in comparable locales. WCGS's construction resulted in very large population increases in Coffey County (Table C.79). During the peak construction year, 1984, approximately 5500 construction workers were on-site at WCGS. Because Wolf Creek is located in a rural county that has no major urban population center and based on residential settlement patterns of construction work forces at other nuclear plants, it is estimated that approximately 20 percent (1100 persons) of the peak construction work force lived in Coffey County (Table C.80). The remainder are estimated to have commuted to the job site (NUREG-75/096). Also, it is estimated that 70 percent of the construction work force residing in Coffey County (770 persons) were workers who migrated to the study area for jobs at the plant. Based on the pattern of construction workers' in-migration at other nuclear projects, it is estimated that 51 percent of the in-migrants (393 workers) were accompanied by their families. Assuming the 1990 average family size for Kansas (3.08), this represents a total in-migration of 1587 residents for Coffey County.

Based on construction in-migration and the ratio of nonplant jobs created during the peak construction periods at nuclear plants in comparable locales, it is estimated that Wolf Creek's peak construction period created an additional 275 jobs in service industries supported by the spending of WCGS construction workers. As a result of these indirect jobs, an estimated 144 additional workers and their families (a total of 342 persons) moved into the study area (Table C.80). In all, it is estimated that approximately 2329 new residents moved to Coffey County as a result of Wolf Creek's peak construction period. This influx of new residents represented 20.5 percent of Coffey County's total population in 1984.

Operations at WCGS have resulted in smaller population increases than did the plant's construction, but the increase still has been relatively large. In 1989, 1044 permanent plant staff were on-site at WCGS (additional contract workers have been on-site during outages, but they have not been included because their presence at the plant was temporary). Of the permanent plant staff, approximately half (522) live in Coffey County (Wolf Creek Nuclear Operating Corporation 1990). Based on residential settlement patterns of workers at nuclear plants in comparable locales, it is estimated that 50 percent (261) of those residing in Coffey County in 1989 were prior residents who obtained jobs and that 261 were workers who migrated into the area for jobs (Table C.81). Also following the pattern set by personnel in-migrating to work at other nuclear plants, it is estimated that 66 percent of the in-migrants (172) were accompanied by their families. Assuming the 1990 Kansas average family size of 3.08 persons, this represents a total in-migration of 619 residents for the county. Based on work force in-migration and the ratio of nonplant jobs created at other nuclear plants during operating periods, it is estimated that Wolf Creek's 1989 operations created an additional 418 indirect jobs in service industries supported by the spending of WCGS workers. As a result of these indirect jobs, an estimated 218 additional workers and their families (a total of 518 persons) moved into Coffey County (Table C.81). In all, it is estimated that approximately 1137 new residents moved into Coffey County as a result of WCGS's 1989 operations. These new residents made up about 13.3 percent of Coffey County's 1989 population of 8559.

C.4.7.1.2 Predicted Growth Resulting from License Renewal

As discussed in Section C.3.1, Wolf Creek's license renewal would require the completion of a number of refurbishment tasks. Many of the refurbishment tasks are expected to be completed during scheduled refueling outages during a period of 8 to 10 years before the actual license renewal date. However, the final refurbishment work is expected to be completed during one large refurbishment outage scheduled for the year before the unit's license renewal date. As this final refurbishment outage would involve more workers on-site over a longer period of time than any of the preceding refueling outages, it represents the peak refurbishment period. However, because there are uncertainties concerning the length of the outage and the size of the work force required to complete the refurbishment of a given unit, this section examines a work force scenario as described in Sections C.3.1 and C.4.1.1.2.

Given the work force scenario detailed in Section C.3.1, it is estimated that 2273 workers would be on-site to complete refurbishment of WCGS in 2024 (SEA 1994). Further assuming that the residential distribution of refurbishment workers would be similar to that estimated for the 1984 WCGS construction work force, it is estimated that 20 percent (455) would reside in Coffey County. For Wolf Creek, estimates of refurbishment worker in-migration are based on construction experience at nuclear plants located in areas similar to Coffey County. It is estimated that 70 percent (319) of the refurbishment workers living in Coffey County would be workers who migrate into the area for jobs at WCGS (Table C.82). Also following the pattern set by construction workers' in-migration at other nuclear projects, 51 percent of the in-migrants (163) would be accompanied by families. Using the Kansas average family size of 3.08, total refurbishment worker in-migration would result in 658 new residents for Coffey County. Based on construction in-migration and the ratio of nonplant jobs created during peak construction periods at nuclear plants in comparable locales, Wolf Creek's refurbishment is projected to create an additional 114 indirect jobs in service industries supported by the spending of refurbishment workers. As a result of these indirect jobs, an estimated 59 additional workers and their families (a total of 140 persons) would be projected to move into Coffey County (Table C.82). In all, approximately 798 new residents would be expected to move into Coffey County as a result of WCGS's refurbishment under the work force scenario. That would represent 9.1 percent of Coffey County's projected population of 8763 in 2025.

Once plant refurbishment is completed for WCGS, the work force would consist mostly of permanent plant staff. Additional refurbishment/refueling workers would be temporarily on-site approximately every 2 years; however, they would not be permanent, on-site plant staff, and many of them are expected to commute from outside the study area. It is expected that a maximum of 60 additional permanent workers per unit would be required during the license renewal term. Assuming that the new workers' residential distribution would be the same as current workers', approximately 50 percent (30) would reside in Coffey County. Based on worker in-migration at nuclear plants in comparable locales, it is estimated that 50 percent (15) of those residing in Coffey County would be prior residents who obtain jobs and that 15 would be workers who migrate into the area for jobs (Table C.83). Also following the pattern set by personnel in-migrating to work at other nuclear plants, 66 percent of the in-migrants (10) would be accompanied by their families. Using the Kansas average family size of 3.08 people, total in-migration would result in 36 new residents for the county. Based on work force in-migration and the ratio of nonplant jobs created at other nuclear plants during operating periods, it is estimated that WCGS's license renewal term would create an additional 24 indirect jobs in service industries supported by the spending of plant workers. As a result of these indirect jobs, an estimated 13 additional workers and their families (a total of 32 persons) would be projected to move into Coffey County (Table C.83). In all, approximately 68 new residents would be expected to move into Coffey County as a result of WCGS's license renewal term. That would represent 0.8 percent of Coffey County's projected population in 2025.

C.4.7.2 Housing

The following sections examine the housing impacts that occurred in Coffey County during construction and operation of WCGS and predict housing impacts that would result from refurbishment activities and continued operation. Possible impacts to housing include changes in the number of housing units, particularly the rate of growth of the housing stock; changes in occupancy rates; changes in the characteristics of the housing stock; and changes in rental rates or property values.

Section C.4.1.2 includes a complete discussion of the methodology and assumptions used to predict housing impacts.

C.4.7.2.1 Impacts from Plant Construction and Operation

The following section details project-related housing demand in Coffey County and describes the housing market at the time of Wolf Creek construction. A discussion of changes that occurred in the housing market and plant construction-induced impacts on housing follows. Finally, impacts from the operation of Wolf Creek on local housing are assessed. Because Wolf Creek was not included in the NUREG/CR-2749 study, estimates of worker in-migration are based on the construction experience at other nuclear plants in comparable locales (Section C.4.7.1).

Construction of Wolf Creek began in 1977 and was completed in 1985. The construction work force peaked in 1984 at approximately 5500. Only 20 percent of the work force resided in Coffey County, but 70 percent of those workers migrated to the area for refurbishment jobs. Other workers, both prior residents and in-migrants, commuted from places within 120 km (75 miles) of the site. Project-related housing demand in Coffey County peaked in 1984 at 713 units. This demand represents 18 percent of the 3928 housing units in Coffey County in 1984.

Year-round housing in Coffey County in 1970, before construction of WCGS, totaled 3067 units. Of these, 92.8 percent were in one-unit structures. Of the occupied units, 21 percent were renter-occupied. The vacancy rate (for sale or rent only) was 3.3 percent. A local source reported that the vacancy rate had increased considerably between 1970 and the beginning of WCGS construction.

Local sources have indicated that during construction, housing occupancy rates, particularly of rental housing, reached 100 percent. Although many construction workers chose to live in an area more urban than Coffey County, others were forced to do so simply because there was no available housing. Thus, in-migrants located as far away as Kansas City, Wichita, Topeka, and Ottawa. The 1980 census reported a vacancy rate of 3.6 percent in Burlington and 3.3 percent in Coffey County. However, at that time the construction work force was only 2266 members (Braid 1981).

Several changes in the housing stock occurred during WCGS construction. A plant- site mobile home park was added, as were additional connections in the already existing Coffey County mobile home parks. By 1980, 153 mobile homes were in Coffey County, 33 percent more than in 1970. Another change involved the reoccupation of older, dilapidated housing that had previously been unoccupied.

No large-scale developments were initiated during the construction of the plant; however, more houses were built annually during construction than at any time before or since. During the 7-year period before construction, an annual average of 14.4 housing units were built in Burlington (housing permit information before 1977 is not available for other areas of Coffey County). Of these, 80 percent were built in the 3 years before WCGS construction. In the 5 years since construction has been completed, an annual average of 6.8 units have been built. During plant construction, an annual average of 16.4 units were built, about 40 percent of which were in multiunit structures (U.S. Bureau of the Census 1971-90). In 1970, only 12.2 percent of the units in Burlington had been in multiunit structures (U.S. Bureau of the Census 1972).

Rental rates and housing values rose between 1970 and 1980 at a much quicker rate in Coffey County than in the state of Kansas, as is shown in Table C.84. Local sources indicated that no substantial upgrading or new construction occurred to warrant the great increase in rental rates. Rather, the cause for the increases was WCGS project-related demand. It is likely that project-related demand for housing resulted in even greater increases in rental rates and housing values in 1984, the peak construction year.

Since the completion of WCGS construction, rental rates have gone down again and are now 25-30 percent less than they were during construction. Also, housing vacancies, particularly of rental units, are up once again.

Operation of WCGS has had some effect on the Coffey County housing market. A few new homes have been built for operations workers, but no substantial housing development has occurred. The plant has not negatively affected property values; rather, during a recent economic decline in the region, the economic stability provided by the plant,

including steady employment, prevented property values from dropping as sharply as would otherwise have occurred. During refueling periods, however, rental occupancy rates approach 100 percent, and all available trailer pads are used. A typical planned outage at Wolf Creek has involved about 640 additional on-site workers.

In summary, housing demand during WCGS construction caused housing availability to be sharply reduced and rental rates to be sharply increased. Despite this, substantial new housing construction did not occur; rather, trailer parks were expanded or added. WCGS operation has not changed the housing market or housing values; however, the presence of workers involved in refueling activities causes rental occupancy rates to rise considerably.

C.4.7.2.2 Predicted Impacts of License Renewal

Project-related population increases and the commensurate housing demand would be the cause of new housing impacts during refurbishment activities. A summary of recent and anticipated growth in housing is provided. This is followed by predictions of possible impacts during refurbishment and the license renewal term.

Since the completion of WCGS, approximately 10 new units have been added annually to the Coffey County housing stock (U.S. Bureau of the Census 1971-90). At this rate of expansion, there could be 4200 housing units in 2024, the peak year of refurbishment at WCGS. However, many of these housing units are associated with the in-migration of WCGS construction and operations work forces. New housing units are currently being built only when requested by an in-migrating family or to replace an existing structure. The latter case is a likely circumstance considering that 50 percent of the housing units in Coffey County were constructed before 1940. The projected population of the study area in 2024 is 8763; this is 359 persons more than the 1990 population (Section C.4.7.1; U.S. Bureau of the Census 1990). This slow population growth is not expected to sustain the housing growth that has occurred during the last two decades. If half as many houses are built annually between 1990 and 2024 as were built between 1971 and 1990, there would be 3862 units in 2024. The population in 2024 is projected to required 3519 housing units, leaving 343 units vacant. This would result in a 8.9 percent vacancy rate. The 1990 housing vacancy rate in Coffey County was 10.8 percent.

According to the estimate of the number of workers required for plant refurbishment and based on plant construction experience, 319 workers of the total work force of 2273 are expected to migrate to Coffey County for refurbishment jobs. Of these in-migrants, 163 are expected to be accompanied by families. Some doubling-up is expected to occur among the 156 unaccompanied workers, so that each unaccompanied mover would require 0.85 housing unit. The in-migration of these workers would result in a total refurbishment-related housing demand in the peak year of 296 housing units. In addition, some indirect jobs are expected to result from the spending of project workers. An additional 59 workers are projected to move into Coffey County, bringing the total project-related demand for housing to 355.

Refurbishment-related housing demand is far less than that which occurred during construction, yet it still accounts for 9.2 percent of the projected housing stock. Because projected demand exceeds projected vacancy, housing availability may be drastically reduced and approach zero availability. Competition for existing units may cause great increases in rental rates. Existing mobile home parks will likely be expanded, or new mobile home parks may be added to accommodate project workers. New housing construction would not result because of the brief duration of this peak demand, but previously abandoned housing may be returned to residential use. In summary, large new impacts to housing are possible during refurbishment.

Housing impacts involving marketability and value that would occur during the license renewal term are the same as those currently being experienced (Section C.4.1.2.1). The 60 additional workers (60 per unit) required during the license renewal term and the commensurate housing demand would cause only small new housing impacts. However, the number of refueling and maintenance workers required periodically would be slightly increased (by approximately 30 workers). Thus, the large housing impacts that are currently experienced in Coffey County during refueling periods would continue and may be slightly exacerbated by the additional workers during the license renewal term.

C.4.7.3 Taxes

C.4.7.3.1 Impacts from Plant Construction and Operation

The construction permit on WCGS was granted in 1977, and commercial operation began in 1985. WCGS was not part of the Mountain West or any other systematic study; therefore, historical data on economic effects are limited.

WCGS pays property taxes to several taxing jurisdictions, although most of them are very small (e.g., water districts, cemeteries) and the taxes paid are insignificant. Substantial amounts are paid to the state of Kansas and significant amounts to Coffey County and the Burlington School District in Coffey County (Fritz). Table C.85 indicates the taxes paid to these jurisdictions for 1980, 1985, and 1989.

The taxes paid by WCGS dominate Burlington School District and Coffey County revenues since the nuclear plant's tax payments make up over 60 percent of the taxes levied by this school district (and about 63 percent of its total revenues) and nearly 45 percent of the total revenues for Coffey County (Burlington Unified School District 1980, 1985, and 1989).

An indication of the importance of WCGS to the local tax bases can be seen from the increase in total revenue before and after taxes were levied. In 1977, total county revenue was $1.7 million (all amounts in constant 1989 dollars); by 1985 it had increased to $10.4 million and reached $14.7 million in 1988. This was a greater than eightfold increase in revenue over an 11-year period. More than 85 percent of this increase was from increased tax collections. Another indication of tax effects is that per capita tax revenues in 1977 were $157, and by 1988 they had increased to $1417. The total per capita property tax paid by WCGS to Coffey County and the Burlington School District was $2381. This was more than four times the per capita property tax revenues for the entire state of Kansas, which averaged $520 (1989 dollars) in 1981-82 (U.S. Bureau of the Census 1986).

Taxes paid to the Burlington School District have shown a similar sharp increase. General fund property tax revenues were $683,000 in 1977-78 (1989 dollars), increasing to $3.8 million in the proposed 1989-90 budget. The tax revenues paid to the Burlington School District significantly increased expenditures per pupil. The Burlington School District is in a generally poor area of southeastern Kansas; however, the general fund budget per pupil in 1988-89 was $4605, which was 3 percent above the statewide median for similar-size school districts (Unified School Districts of Kansas 1990). Classroom teacher salaries were also slightly above the statewide average (Kansas Education Department 1990). An important advantage of the large tax base provided by WCGS for the Burlington School District is in the ability to generate capital funds for facilities and school purchases of equipment and materials. In this respect, the district has significantly better facilities than the surrounding school districts. Expenditures related to the general fund, however, do not fully reflect the large property tax valuation within the Burlington School District because there is a state-imposed cap on annual increases has limited Burlington to annual increases of 2 percent over the last several years (Kansas State Board of Education 1990). The capital outlay fund can be applied to a limit of 4 mills and has no cap on annual increases. However, the teacher salaries and other everyday expenses are paid from the general fund, which has expenditures near the state median but above those of surrounding school districts.

Another effect of WCGS is property tax rates in the local taxing jurisdictions. The Burlington School District has the lowest mill levy of any school district in Kansas. The 1989 total mill levy for Burlington School District was 14.60, compared to the statewide median of 56.39 (Kansas Education Department 1989).

C.4.7.3.2 Predicted Impacts of License Renewal

The new tax-related impact expected to occur during refurbishment of WCGS results from capital improvements undertaken during the current term outages. The assessed value of the plant would increase during this time and thus increase WCGS's tax payments to Coffey County and the Burlington School District. This new impact does not involve capital improvements that take place during the final refurbishment outage and that would be reflected in the plant's assessed value during the license renewal term. The magnitude of the new impact depends on which improvements

would occur at WCGS early on and which would be done during the final outage. For example, if the steam generator is replaced during a current term outage, the assessed value may increase considerably before the license renewal term begins. If steam generator replacement and other major capital improvements are not undertaken early on, the increase in assessed valuation may be only minor. The increase, in either case, is expected to cause only a small to moderate new tax impact.

During the license renewal term, the primary tax-related impact would be the continuation of tax payments that WCGS is currently making to local jurisdictions. WCGS currently provides 45 percent of Coffey County's revenues and 63 percent of Burlington School District's revenues. A new impact would also result from the increase in tax payments resulting from improvement made at the WCGS during the final refurbishment period. Thus, tax revenues would increase in absolute terms but may remain constant or decrease as a percentage of total revenues of the taxing jurisdictions. Based on current conditions, WCGS tax revenues--the continuing and additional payments combined--are expected to continue to make up a large share of the total revenues of the county and the school district.

C.4.7.4 Public Services

C.4.7.4.1 Impacts from Plant Construction and Operation

In terms of public services, WCGS affects several surrounding communities and school districts, especially Coffey County and the incorporated cities of New Strawn and Burlington. These incorporated cities maintain certain utilities and their streets, and Burlington has a police department. The majority of services, however, are provided at a county or state level, and recreational facilities for both communities are provided through a district recreation commission. WCGS also has affected the schools in Burlington, Lebo/Waverly, and Leroy, and there have been some effects on the city of Emporia in neighboring Lyon County. There have also been significant impacts on transportation north of the plant.

Since operations at WCGS began, existing facilities have been upgraded in the area, and other new ones have been built. This has happened especially in the areas of education, transportation, public safety, recreation, and public utilities. Information pertaining to expenditures is discussed in detail in Section C.4.7.3.

Education

WCGS is located in the Burlington School District, Unified School District 244, but the presence of the facility also affects the nearby school districts in Lebo/Waverly and Leroy. Before the construction of WCGS, the Burlington School District maintained three schools: an elementary, a middle, and a high school. The Burlington superintendent reported that the plant's construction had noticeable impacts on district enrollment, as it did in Lebo/Waverly and Leroy. Unlike the two neighboring school districts, there was no large drop in enrollment in Burlington after construction of WCGS was complete.

The superintendent in the Lebo/Waverly school district, Unified School District 243, indicated that a period of higher enrollment lasted for 6 to 7 years, but it was followed by a sharp drop in the number of students. Enrollment at Leroy also grew during WCGS's construction but has dropped nearly 19 percent since its completion. However, the drop in enrollment was due more to the loss of jobs in nearby oil fields over the last 5 years and was not as bad as had been predicted.

Operations at WCGS have had a small effect on enrollment in the districts. Maintenance and refueling activities at WCGS also have caused only small impacts on enrollment in all of the school districts. However, as noted in Section 4.7.3, tax funds from WCGS have been very important to the Burlington School District, allowing an addition onto the elementary school and new buildings for the middle and high schools.

Transportation

Informants in Burlington and the small town of New Strawn reported that the construction of WCGS did not affect traffic or street repair in these communities. However, the city manager in Emporia stated that traffic problems increased in his city during construction. Roads and bridges in the area were unimproved and in a state of disrepair before construction. Revenues from WCGS have since funded the repairs of roads and bridges, and they are now in good condition. This was made possible by a shift in road funding from the townships to the county. Burlington's city manager reported that the county also had been assisting the city with street maintenance funds.

Although there were minor impacts in the areas mentioned above, traffic on the highways leading toward the plant from the west, north, and northeast experienced large impacts. The Coffey County engineer estimated that, during construction, the surge in traffic at shift changes caused congestion as far away as 100 km (60 miles). Construction workers who commuted into Coffey County lived in various larger cities, such as Emporia, Topeka, Ottawa, and Olathe. Traffic from these communities approached WCGS mainly on two highways, Interstate 35 and U.S. 75. The main access to the plant was from the intersection of these two highways, about 24 km (15 miles) north of the plant. Traffic was bottlenecked from this intersection south almost to New Strawn, where the plant road intersects with U.S. 75.

Following plant construction, the on-site work force was reduced substantially, and improvements were made to roads leading to and from the plant. Accordingly, large plant-related traffic impacts no longer are experienced in the study area, either during normal operations or during periodic plant outages for refueling (with an average of 640 additional workers) although traffic is noticeably heavier during outages than during normal operations, so that there are small to moderate impacts.

Public Safety

The city of Burlington provides police protection to its citizens and formerly had a volunteer fire department. In January 1990, the fire department was put under the control of county, which has greater financial resources. Coffey County will also build and maintain a new volunteer fire station in New Strawn in the near future.

New Strawn does not provide police protection, but Emporia provides police protection and has a paid fire department. No informant reported an increase in demands on fire protection in any community since WCGS's construction began. One respondent did state that problems with law enforcement in Emporia existed during the construction period, but this was not reported elsewhere.

No informant reported impacts on public safety from operations at WCGS or from refurbishments at the plant.

Social Services

Social services and health programs in Burlington and New Strawn are provided by the state and Coffey County, as is the case generally in Emporia. No informant reported impacts from the construction at WCGS. Beginning in 1984 the Lyon County Health Department had increased demands, but this was attributed to other factors, not to Wolf Creek's operations. No impacts were reported from refurbishment activities.

Public Utilities

Burlington's public utilities experienced noticeable impacts during WCGS's construction. The city provides water, sewage disposal, and electricity to residents, and these were noticeably affected. One informant reported that these services were expanded during construction. However, the city manager stated that utilities were well enough established at the time construction began that there were no significant effects because of WCGS's demands.

New Strawn provides water to its residents, and the water system was affected more during construction than any other service of New Strawn because the large influx of construction personnel put great demands on the water system. A

new water plant was necessary, regardless of the employees' presence, so a new one was built. Property taxes and water bills paid by the WCGS workers contributed substantially to its funding.

The city of Emporia has provided water, sewage treatment, and refuse disposal for residents since before construction began at WCGS. No informant reported large impacts on these services during the plant's construction.

The cities of Burlington, New Strawn, and Emporia report no impacts on city services as a result of operations and refurbishments at WCGS.

Tourism

The construction and operation of WCGS has had small effects on tourism in the area. No one reported major tourist activities in Burlington before the construction of WCGS began, but one informant stated that during construction the plant was open to the public often, that many people visited it, and that it is still open occasionally.

Operations at the plant also have encouraged tourism, both directly and indirectly. Tour buses make stops at the plant and its education center. In-migrants are credited with the survival of a puppet factory, another tourist attraction in Burlington. Several sites in and near Emporia may be developed in the future for increased tourism. The combination of these factors in Lyon County resulted in the formation of a convention and visitor's bureau in 1984 and the creation of a bed tax in Emporia; however, overall effects have not been significant to date. The Emporia Convention and Visitor's Bureau reports that the plant at WCGS has not resulted in a decrease in tourism.

Recreation

During construction, there were small impacts on public sports leagues and facilities in Burlington and New Strawn. New Strawn, as part of the Burlington School District, is also in the jurisdiction of the Burlington Recreation Commission. Recreation in Emporia experienced moderate effects from the construction of WCGS. The Emporia Recreation Commission noted an increase in participation and a definite difference in recreational programs during that time; after construction workers left, cutbacks had to be made.

Recreation in Burlington has changed a great deal since WCGS began operating; most of the plant's impacts have been monetary. One respondent reported that funds from the plant had brought about the high school's new football and track facilities and that these facilities are used heavily, boosting retail business as well (S. Smith 1990). Burlington's recreation center, similarly financed, is a welcome amenity according to several sources. It was also noted by two informants that the cooling pond at WCGS would be a welcome addition to recreational facilities in the area, but the reservoir is not open to the public at this time.

There were no indications that operations and maintenance activities affect recreation in Burlington, and there were reports of insignificant impacts on Emporia's recreation programs. For instance, WCGS visitors and employees frequent the golf course, and organized recreational activities have slight increases during outages.

C.4.7.4.2 Predicted Impacts of License Renewal

Based on the estimated 2273 direct workers required during peak refurbishment, the staff estimates that 163 direct workers and 39 indirect workers will migrate with their families to Coffey County (Section C.4.7.1.2). The number of children accompanying these workers is estimated using the Kansas average family size (3.08) and assuming that all families include two adults. Children are expected to be evenly distributed in age from ?1 to 18 years. Assuming that 72.2 percent of these children are school age (5 to 18 years), there will be an average of 0.78 school-age children per in -migrating family, or a total of 158 new students in Coffey County, or about 12 per grade. This represents a 8.9 percent increase above the projected number of school-age children in Coffey County in 2024 (assuming the 1990 age distribution of the population). This considerable increase could easily require additional staff, might require temporary classrooms or conversions of facility use, and may result in moderate to large impacts to education.

An analysis of the projected BWR bounding case work force (1500 persons) was conducted to determine if a smaller work force would result in a lesser impact. (This is a hypothetical scenario because ANO is a PWR.) The 133 in-migrating direct and indirect workers who bring their families to Coffey County would be accompanied by 104 school-age children (or 8 per grade). This would result in a 5.8 percent increase in the number of school-age children in Coffey County in 2025 and could cause moderate impacts, especially if the children are concentrated geographically (e.g., in Burlington).

An analysis of potential impacts to education under the typical work force scenario (1017 workers) finds that there would be 89 direct and indirect workers migrating to Coffey County with their families. The associated 69 new school-age children (or 5.5 per grade level) would result in a 3.8 percent increase in the projected number of school-age children in Coffey County in 2025. This increase in enrollment will likely cause small impacts, but moderate impacts to the education system could result if the students are concentrated geographically or if the facilities and classes are already at their peak capacity.

During the construction of WCGS, impacts on social services and tourism were insignificant. Because refurbishment would bring in fewer people than did the initial construction (2329), any future impacts to these public services would be small. (Coffey County's 1984 population was 9001 excluding WCGS construction-related in-migration.)

Public safety in Coffey County, which has been affected fiscally by WCGS, should also see small changes during the refurbishment period. Recreation, which experienced moderate impacts during the construction of WCGS, would probably experience only small impacts during refurbishment in 2024 because the recreation facilities themselves have been significantly improved since WCGS construction. A 9.1 percent increase in population may result in small to moderate impacts to public utilities.

Transportation effects hinge on three factors: the number of workers, the state of the roads, and the number of access points. Currently, one major access point leads into WCGS via a two-lane road. Based on the level of impacts that occurred during original plant construction, it is expected that the use of local roads by the peak refurbishment work force could result in large transportation impacts, despite road improvements made after initial construction.

During the license renewal term, only small impacts are expected for any public service, including transportation.

C.4.7.5 Off-Site Land Use

This section describes the off-site land-use impacts of the construction, operation, and license renewal of WCGS. The discussion of impacts is primarily concerned with land use in the immediate vicinity of the plant, but impacts to Coffey County are described where appropriate. Land-use impacts are examined for two time periods. First, Section C.4.7.5.1 identifies the land-use impacts of WCGS's construction and operation. Next, Section C.4.7.5.2 projects the land-use impacts of WCGS's refurbishment period based on the impacts that occurred during the plant's construction. Also, Section C.4.7.5.2 projects the land-use impacts of the plant's license renewal term based on the impacts that have occurred during operations. Information sources for this report include the Final Environmental Statement Related to Construction of Wolf Creek Generating Station, Unit 1 (NUREG-75/096); the Final Environmental Statement Related to the Operation of Wolf Creek Generating Station, Unit 1 (NUREG-0878); and interviews with key sources of information in Coffey County. Section C.4.1.5 describes the methods used to assess and project land-use impacts for all case study plants.

C.4.7.5.1 Impacts from Plant Construction and Operation

WCGS and its cooling lake were built on 3973-ha (9818-acre) tract of land near Burlington. The cooling lake inundated approximately 2100 ha (5100 acres) of land, and the actual plant site, including the lake's dam and dikes, covers approximately 80 ha (200 acres). Before the plant's construction, the land had been used almost exclusively for agriculture and livestock grazing, although 25 farm-related homes were on the site. The general area in the plant's vicinity was very rural, and agriculture, livestock grazing, and low-density, farm-related residences were the primary

land uses. There were only two small industries (a total of 33 employees) and some storage facilities (for petroleum products, grains, and fertilizer) within 8 km (5 miles) of the plant site at the time construction began. The town of Burlington, about 5.6 km (3.5 miles) southwest of the plant, was primarily a rural residential town with little commercial and almost no industrial land use (NUREG-75/096; NUREG-0878).

WCGS's construction had significant impacts on land use in the vicinity of the plant. Part of the impact included removing 25 homes and relocating some federal-aid secondary-route roads. Another immediate impact was on property ownership. In an effort to avoid subdividing previous owners' property beyond economic usefulness, the Kansas Gas and Electric Company purchased entire tracts of land, refusing to purchase only portions of an owner's property. This meant that the company acquired a great deal of excess land for the WCGS site. The land acquisition, the plant's construction, and the lake's inundation involved removing over 3600 ha (8800 acres) of agricultural and range land from production. There was some concern, before construction, that removing the agricultural and range land from production would have negative effects on the local economy. However, the impacts to range land have been somewhat alleviated by the fact that the Kansas Gas and Electric Company leases much of its excess property as range land to area farmers. In addition, the impacts of WCGS's operation, discussed below, have more than compensated for the local economy's loss of productive agricultural land (NUREG-75/096).

The plant's construction had moderate impacts on land use elsewhere in Coffey County. Informants indicated that land use in some of the towns, particularly Burlington and New Strawn, was temporarily affected by the presence of the unusually large construction work force (approximately 5500 workers were on-site during the peak construction year). In 1984, construction-related population growth accounted for as much as 20.5 percent of Coffey County's total population. The primary impact of such growth involved the construction of temporary housing and the influx of mobile homes to provide housing for the construction workers. Informants felt that the number of mobile homes that came into the area was too great for the local mobile home parks to accommodate and that this had negative effects on some of the parks in Burlington and New Strawn. These effects were temporary, however, as most of the workers took their mobile homes with them as they left the area when the plant's construction was completed. Also, the presence of such a large construction force attracted some commercial and service businesses to Burlington. However, most of these were temporary businesses that moved into vacated buildings in Burlington when the plant's construction began and moved out of town when construction was completed. Overall, the influx of construction workers had only temporary land-use impacts and did not create permanent changes in land-use or development patterns in Coffey County (NUREG-75/096).

Operations at WCGS have had only minimal direct land-use impacts on Coffey County. Key sources indicated that the plant's presence had not been a deterrent to residential development. Conversely, the informants felt that the plant's operation had not directly encouraged residential development in Coffey County. This is because half the operations work force resides outside of Coffey County, with many workers commuting from Emporia and Ottawa. The plant's presence also has had neutral impacts in terms of directly attracting support industries and commercial growth to the county.

However, WCGS's operation has had large indirect impacts on land use in Coffey County. The plant's property tax payments have allowed the county to lower its property tax rates while upgrading its provision of municipal services. Coffey County also has used much of its tax revenue from the plant to purchase industrial buildings and machinery. The county buys the building or the machinery and then leases it at a discount to the company on a lease-purchase basis. The company benefits by paying less for facilities and equipment, and the county benefits by attracting industrial development. According to key sources, the combination of low property taxes, above-average municipal services, and relatively low plant and equipment costs has been successful in attracting small and medium-sized industries to Coffey County.

WCGS's positive contributions to the county's overall quality of life also serve as a tool in recruiting industries. The tax base, employment, and salaries that the nuclear plant provides have encouraged commercial development, particularly in the incorporated towns in Coffey County, and have helped make the region's economy more stable. Key sources felt that the plant's tax payments were responsible for improving the county's hospital, roads, sewers, schools, and

recreation facilities and that these improvements were a selling point to industrial prospects. Also, informants felt that the plant had brought a more highly educated, technical work force to the county and that the workers would continue to support the types of community improvements that would be attractive to industries.

Since WCGS's construction, industries have begun to locate in Burlington and, more recently, in Waverly, Lebo, and Leroy. Although most of the industries are small, their presence does create changes in the county's land-use and development patterns. Burlington, a town that had only two small rural industries when WCGS's operation began, now has two industrial parks. The second industrial park attracted Tricon Industries, a company that provides approximately 500 jobs in producing fiberglass vaults for communications equipment. Although Coffey County is still rural, with agriculture as its primary land use, WCGS's tax payments and overall positive contributions to the community's quality of life have enabled the county to attract significant industrial development for the first time. This represents a trend away from the county's traditional rural land-use pattern, as more agricultural and range land is converted to industrial uses. Overall, informants felt that the nuclear plant's land-use impacts on Coffey County had been very positive.

C.4.7.5.2 Predicted Impacts of License Renewal

With the population increase projected for Coffey County, the direct land-use impacts of WCGS's refurbishment are expected to be moderate. Using the bounding case work force scenario, refurbishment-related population growth is projected to represent a 9.1 percent increase in the county's projected population in 2025. However, the new impacts are likely to be much smaller than those that occurred during the construction-related growth peak of 20.5 percent in 1984. The influx of refurbishment workers might cause some temporary housing shortages; however, based on what occurred during the plant's construction, it is not likely that the shortages would result in any new large-scale residential development or changes in land-use patterns.

An analysis of the projected 1500-person BWR bounding case work force was conducted to determine whether a smaller work force would result in a lesser impact to land use. The in-migrating population associated with a BWR bounding case work force would be 526, or a 6.0 percent increase in Coffey County's projected population in 2024. This would result in moderate impacts to land use.

An analysis of potential impacts to land use under the typical work force scenario (1017 workers), finds that the projected in-migrating population of 353 (or a 4 percent increase in Coffey County's 2024 population) would likely result in only small impacts to land use.

Coffey County is still predominantly rural, and land in the plant's immediate vicinity will be used for agriculture and livestock grazing, as it has been during the plant's operation. Local officials expect some small-scale industrial and commercial growth in the county's incorporated towns, particularly in Burlington and New Strawn. However, the nuclear plant's presence is not expected to attract support industries or commercial development directly and is likely to neither encourage nor deter residential development.

Because WCGS is located in a rural area that depends largely upon agriculture for its economic stability and because the nuclear plant and its property account for over 90 percent of Coffey County's taxable assessed valuation, the new indirect land-use impacts of WCGS's license renewal term are expected to be large. As during operations thus far, WCGS's tax payments would continue to allow Coffey County to provide above-average municipal services with relatively low property tax rates. Sources indicated that the plant's tax payments had allowed the county to upgrade its services and provide amenities that improved residents' overall quality of life. They noted that some plant staff who had chosen to live in larger communities outside Coffey County when operations began were now moving into the county as a result of its above-average services and amenities. If this trend continues, a greater proportion of WCGS's plant staff would live in Coffey County in the future. It is expected that this in-migration would result in some additional residential development, especially in Burlington, and that this development could create changes in the county's land-use pattern.

Also, because of WCGS's tax payments, the county would be able to continue its successful economic development program of providing lease-purchase options for prospective industries' plant and equipment needs. By attracting small and medium-sized industries to the area, these benefits also would promote commercial and residential growth and further change Coffey County's land-use pattern. Although the county's land-use pattern is expected to remain predominantly agricultural, the new indirect impacts of WCGS's license renewal term would have large effects on land-use and development patterns in Coffey County.

C.4.7.6 Economic Structure

C.4.7.6.1 Impacts from Plant Construction and Operation

The construction and operation of WCGS have resulted in large economic impacts to Coffey County. First, they have directly increased employment and income for county residents employed in the construction and operation of the plant. Second, direct employment and income have generated local expenditures resulting in indirect employment and income, and increased tax revenues from WCGS have helped provide the necessary infrastructure for attracting new business into the county. Table C.86 presents the estimated employment and income effects of WCGS's operation for residents of Coffey County.

As the table indicates, the economic effects of operating WCGS are very important to the local community. One indication of the impact on the local economy is the increase in per capita income compared to that in neighboring counties. For instance, from 1975 to 1990, Coffey County per capita income increased by 52 percent. By contrast, in the neighboring counties of Lyon, Osage, and Anderson, per capita income increased by 29, 35, and 43 percent, respectively, over the same time period. Over this same period, Coffey County employment by place of business increased by 75 percent, whereas combined employment in the neighboring counties increased by only 22 percent.

C.4.7.6.2 Predicted Impacts of License Renewal

Tables C.87 and C.88 indicate that although the economic effect of WCGS on Coffey County would decline in relative terms, it would still be a crucial component of county employment during refurbishment and after license renewal.

The main impact of license renewal at WCGS would be the continued employment and income benefits of the plant's operation. The benefits should be similar in size to those that existed in 1989, but the relative importance of the benefits would decline because Coffey County's economy is projected to grow in other sectors.

The work force scenario detailed in Section C.3.1 was used to estimate the employment and economic effects of refurbishment at WCGS. Table C.87 shows the total direct and indirect plant-related employment of study area residents during refurbishment. It is projected that WCGS would employ 455 county residents as refurbishment workers in 2024 (Section C.4.7.1.2). Indirect employment that would result from purchases of goods and services during refurbishment is projected to create 108 additional jobs for Coffey County residents. Together, WCGS-related direct and indirect employment is projected to total 563 workers in Coffey County. This is a moderate impact, as those workers represent approximately 6.8 percent of Coffey County's total projected employment in 2024.

Relatively few new plant-related jobs would be created at WCGS during the license renewal term. Nearly all plant-related employment (and associated impacts) expected during that time period would represent a continuation of employment (and impacts) from past operations. Table C.87 shows the impact of the increased labor requirements at WCGS after 2025. The license renewal term work force for WCGS would require an estimated 60 additional workers; 30 are projected to be Coffey County residents. In addition, an estimated 23 indirect jobs are projected to be created for county residents by license renewal. With the continued effects of the plant's current employment and the additional employment to be created, total direct and indirect license renewal term employment is projected to be 575, or 7.1 percent of Coffey County's total employment in 2025. This employment level represents a moderate impact.

C.4.7.7 Historic and Aesthetic Resources

This section describes the impacts that the construction and operation of the Wolf Creek Generating Station have had on historic and aesthetic resources and projects the expected impacts of the plant's refurbishment and post-license renewal operations. Information sources include the Final Environmental Statement Related to the Operation of Wolf Creek Generating Station, Unit 1 (NUREG-0878) and interviews with key sources in Coffey County and elsewhere in Kansas.

C.4.7.7.1 Impacts from Plant Construction and Operation

The construction and operation of the Wolf Creek nuclear facility have had insignificant impacts to Coffey County's historic resources. According to the Final Environmental Statement (NUREG-0878), no listed natural or historic landmarks or sites are within 8 km (5 miles) of the plant. Since publication of the Final Environmental Statement in 1982, none has been added or identified as eligible for inclusion in the National Register of Historic Places or the National Registry of Natural Landmarks. At the time of the issuance of the Final Environmental Statement, the state historic preservation officer stated that no historic sites or buildings would be affected by the construction or operation of the Wolf Creek power plant. Sources report that the plant's construction, operation, and community taxes have resulted in a slight indirect benefit to the community in terms of historic preservation (Sirico 1990; Reams 1990). Members of the construction and operating work forces have brought their own personal experiences of the benefits of historic preservation to the community. They have purchased some depressed properties of historic significance and restored them. Community taxes have helped fund the construction and operation of a new museum.

Numerous archaeological sites were identified before construction, and some were further investigated, but from the additional analyses it was concluded that none of the sites was significant enough to warrant nomination to the National Register. The transmission line corridors followed alignments purposely created in part to avoid archaeologically sensitive areas. A railroad spur built to facilitate construction at the power plant site threatened an archaeological site; the area was excavated before construction.

Surrounding the site is a low-density rural agricultural area. The plant relies on an artificial impoundment for cooling water; therefore, no strong, stark, towering cooling structure is needed among the flat to rolling farmlands. The sources reported no complaints or problems with the aesthetics of the plant or its effects on the aesthetic resources of the community.

C.4.7.7.2 Predicted Impacts of License Renewal

The impacts of refurbishment of the Wolf Creek plant on local historic and aesthetic resources are projected to be less than those minor ones experienced during the original construction of the plant. However, determination of impacts to historic resources from refurbishment and license renewal term operations must be made through consultation with the SHPO.

C.5 Endnotes

[**Prev** | **Next** | **Top of file**]

The PWR conservative work force number used in this analysis is taken from a work force estimate provided by Science and Engineering Associates, InC. (SEA), that differs slightly from SEA's work force estimate discussed in Chapter 2 and Appendix B. The slight difference would not affect the conclusions.
Estimates in Chapter 2 and Appendix B of additional work force required during license-renewal-term operations indicate that only one additional worker will be required on a continuous basis for maintenance and inspection activities. The more conservative figure (60 persons per unit) is used in the analysis to account for workers (contractors or rotating utility employees) who are not associated with refueling but may be on-site intermittently. The 60 persons per unit analysis represents an upper bound of the possible socioeconomic impacts.

C.6 References

The references that follow are divided into three sections: Section C.5.1--printed material that is cited in the text; Section C.5.2-- personal communications cited in the text; and Section C.5.3--final environmental statements on which the text has drawn but which are not specifically cited.

C.6.1 Printed Sources

AEC Docket 50-247, Final Environmental Statement Related to Operation of Indian Point Nuclear Generating Plant, Unit 2, U.S. Atomic Energy Commission, September 1972.

AEC Docket 50-269, Final Environmental Statement Related to the Operation of Oconee Nuclear Station, Unit 1, U.S. Atomic Energy Commission, March 1972.

AEC Docket 50-270, Final Environmental Statement Related to the Operation of Oconee Nuclear Station, Unit 2, U.S. Atomic Energy Commission, March 1972.

AEC Docket 50-275, Final Environmental Statement Related to the Nuclear Generating Station Diablo Canyon, Unit 1, U.S. Atomic Energy Commission, May 1973.

AEC Docket 50-286, Final Environmental Statement Related to the Operation of Indian Point Nuclear Generating Plant, Unit 3, U.S. Atomic Energy Commission, February 1975.

AEC Docket 50-287, Final Environmental Statement Related to the Operation of Oconee Nuclear Station, Unit 3, U.S. Atomic Energy Commission, March 1972.

AEC Docket 50-289, Final Environmental Statement Related to Operation of Three Mile Island Nuclear Station, Unit 1, U.S. Atomic Energy Commission, December 1972.

AEC Docket 50-313, Final Environmental Statement Related to the Arkansas Nuclear One, Unit 1, U.S. Atomic Energy Commission, February 1973.

AEC Docket 50-315, Final Environmental Statement Related to the Operation of Donald C. Cook Nuclear Plant, Unit 1, U.S. Atomic Energy Commission, August 1973.

AEC Docket 50-316, Final Environmental Statement Related to the Operation of Donald C. Cook Nuclear Plant, Unit 2, U.S. Atomic Energy Commission, August 1973.

AEC Docket 50-320, Final Environmental Statement Related to Operation of Three Mile Island Nuclear Station, Unit 2, U.S. Atomic Energy Commission, December 1972.

AEC Docket 50-323, Final Environmental Statement Related to the Nuclear Generating Station Diablo Canyon, Unit 2, U.S. Atomic Energy Commission, May 1973.

AEC Docket 50-368, Final Environmental Statement Related to the Arkansas Nuclear One, Unit 2, U.S. Atomic Energy Commission, September 1972.

AP&L; (Arkansas Power and Light Company), Survey Responses from the Arkansas Power and Light Company, 1990.

Arkansas State Department of Education, Annual Statistical Report of the Public Schools of Arkansas, Statistics Department, January 1990.

Berrien County, Report on Audit of Combined Financial Statements with Supplementary Financial Data, 1988, Niles, Michigan, 1989.

Braid, R. B., "Better Work Force Projections Needed for Nuclear Plant Construction," Power Engineering, 85(4), 91-95, April 1981.

Burlington Unified School District, Financial Statements for 1980, 1985, and 1989, Burlington, Kansas.

California Department of Finance, Population and Housing Estimates for California Cities and Counties: Summary Report, Sacramento, California, 1990.

Cass, J., and M. Birnbaum, Comparative Guide to American Colleges for Students, Parents, and Counselors, 1970-1971 edition, Harper and Row, New York, 1969.

Cass, J., and M. Birnbaum, Comparative Guide to American Colleges for Students, Parents, and Counselors, 9th ed., Harper and Row, New York, 1979.

ConEd (Consolidated Edison Company of New York), Survey Responses from the Consolidated Edison Company of New York, 1990.

County of San Luis Obispo, California, Comprehensive Annual Financial Report, June 1989.

Dauphin County Planning Commission, Annual Report 1988, Harrisburg, Pennsylvania, 1988.

Duke Power Company, Survey Responses from the Duke Power Company, 1990.

EPRI/EA-2228, Socioeconomic Impacts of Power Plants, Electric Power Research Institute, Denver Research Institute, February 1982.

GPU (General Public Utilities Corporation), Survey Responses from the General Public Utilities Corporation, 1990.

Hill, R. R., "Rankings of the Counties and School Districts of South Carolina, 1987- 88," Division of Administration and Planning, Deputy Superintendent, South Carolina Department of Education, May 1989.

Hudson School District, Hendrick Hudson School District Newsletter, New York State, April 1990.

Indiana and Michigan Power Company, Survey Responses from the Indiana and Michigan Power Company, 1990.

Jones & Jones, Visual Impact Study: Statement of Findings, Alternative Closed-Cycle Systems, Indian Point Nuclear Generating Plant, prepared for the U.S. Nuclear Regulatory Commission, Seattle, November 1995.

Kansas Education Department, General Fund Mill Levies of the 303 Unified School Districts of Kansas, 1985-1989, 1989.

Kansas Education Department, Average Classroom Teachers' and Principals' Salaries for the 304 Unified School Districts of Kansas for 1988-89 and 1989-90, Topeka, Kansas 1990.

Kansas State Board of Education Reports, Topeka, Kansas. Londonderry Township, Financial Statements for 1980, 1985, and 1989 for Board of Supervisors, Londonderry Township, Pennsylvania, May 1990.

Middletown Borough, Pennsylvania, Financial Statements for 1980, 1985, and 1989 for Middletown Borough.

National Association of Counties, Nuclear Power Plant Development--Boom or Bust? NACO Case Studies on Energy Impacts, No. 4, Washington, D.C., July 1976.

New York State Education Department, Statistical Profiles of Public School Districts, University of the State of New York/State Education Department, Office of Planning Research and Program Accountability, Albany, New York, January 1990.

NPA (National Planning Association), "Economic Projections," Regional Economic Projection Series, 1990, NPA Data Services, InC., Washington, D.C., 1990.

NUREG-0020, vol. 9, Licensed Operating Reactors, Summary Status Report, U.S. Nuclear Regulatory Commission, Office of Resource Management, Division of Budget and Analysis, October 1985.

NUREG-0066, Draft Supplement to the Final Environmental Statement Related to the Operation of Three Mile Island Nuclear Station, Unit 2, U.S. Nuclear Regulatory Commission, Docket No. 50-320, July 1976.

NUREG-0254, Final Environmental Statement Related to Operation of Arkansas Nuclear One, Unit 2, U.S. Nuclear Regulatory Commission, June 1977.

NUREG-0878, Final Environmental Statement Related to the Operation of Wolf Creek Generating Station, Unit 1, U.S. Nuclear Regulatory Commission, June 1982.

NUREG-1398, Environmental Assessment for Proposed Rule on Nuclear Plant License Renewal, U.S. Nuclear Regulatory Commission, 1990.

NUREG-75/096, Final Environmental Statement Related to Construction of Wolf Creek Generating Station, Unit 1, U.S. Nuclear Regulatory Commission, October 1975.

NUREG/CR-0916, M. A. Shields et al., Socioeconomic Impacts of Nuclear Power Plants: A Paired Comparison of Operating Facilities, Oak Ridge National Laboratory, Oak Ridge, Tennessee, July 1979.

NUREG/CR-2239, D. C. Aldrich et al., Technical Guidance for Siting Criteria Development, Sandia National Laboratories, Albuquerque, New Mexico, December 1982.

NUREG/CR-2749, vol. 1, Socioeconomic Impacts of Nuclear Generating Stations: Arkansas Nuclear One Case Study, Mountain West Research, InC., for U.S. Nuclear Regulatory Commission, 1982.

NUREG/CR-2749, vol. 4, Socioeconomic Impacts of Nuclear Generating Stations: D. C. Cook Case Study, Mountain West Research, InC., for U.S. Nuclear Regulatory Commission, 1982.

NUREG/CR-2749, vol. 5, Socioeconomic Impacts of Nuclear Generating Stations: Diablo Canyon Case Study, Mountain West Research, InC., for U.S. Nuclear Regulatory Commission, 1982.

NUREG/CR-2749, vol. 7, Socioeconomic Impacts of Nuclear Generating Stations: Oconee Case Study, Mountain West Research, InC., for U.S. Nuclear Regulatory Commission, 1982.

NUREG/CR-2749, vol. 12, Socioeconomic Impacts of Nuclear Generating Stations: Three Mile Island Case Study, Mountain West Research, InC., for U.S. Nuclear Regulatory Commission, 1982.

NUREG/CR-2750, Socioeconomic Impacts of Nuclear Generating Stations: Summary Report on the NRC Post-Licensing Studies, Mountain West Research, InC., for U.S. Nuclear Regulatory Commission, July 1982.

Oconee County, 1980-81 County Budget Ordinance, Oconee, South Carolina, 1980.

Oconee County, 1985-86 County Budget Ordinance, Oconee, South Carolina, 1985.

Oconee County, 1989-90 County Budget Ordinance, Oconee, South Carolina, 1989.

Oconee County, Independent Auditor's Report, Oconee County, South Carolina.

ORNL/NUREG/TM-22, A Post Licensing Study of Community Effects at Two Operating Nuclear Power Plants, B. J. Purdy, et al., Oak Ridge National Laboratory, Oak Ridge, Tennessee, September 1977.

PASNY (Power Authority of the State of New York), Survey Responses from the New York Authority, 1990.

Pennsylvania State Data Center, 1990 Population Projections, Philadelphia, Pennsylvania, 1990.

PG&E; (Pacific Gas and Electric Company), Survey Responses from the Pacific Gas and Electric Company, 1990.

Pope County, Arkansas, Financial Statements, 1980, 1985, and 1989, Russellville, Arkansas.

Royalton Borough, Financial Statements for 1980, 1985, and 1989 for Royalton Borough, Pennsylvania, May 1990.

SEA (Science and Engineering Associates, InC.), Refurbishment Work Force Estimates, Albuquerque, 1994.

TCRPC (Tri-County Regional Planning Commission), Building Permits Issued, Harrisburg, Pennsylvania, 1982.

Town of Cortlandt, Adopted Budget, FY 1990, Town Supervisor's Office, Croton-on- Hudson, New York, 1990a.

Town of Cortlandt, Town of Cortlandt Assessed Valuation--Levied--Tax Rates for the 1989-1990 School Year, Town of Cortlandt, Croton-on-Hudson 1990b.

Unified School Districts of Kansas, Report on Enrollments and General Fund Budget per Pupil, 1989-90, 1990.

U.S. Bureau of the Census, County and City Data Book, 1966, 1967.

U.S. Bureau of the Census, Construction Reports--Housing Authorized by Building Permits and Public Contracts, Annual Series, 1970 through 1989, 1971-1990.

U.S. Bureau of the Census, 1970 Census of Housing, 1972.

U.S. Bureau of the Census, State and Metropolitan Area Data Book, 1986, 1986.

U.S. Bureau of the Census, County and City Data Book, 1977, 1978.

U.S. Bureau of the Census, 1980 Census of Housing, 1982.

U.S. Bureau of the Census, County and City Data Book, 1988, 1988.

U.S. Bureau of the Census, 1990 Census of Population, 1990.

Westchester County Department of Planning, Westchester County and Municipality Population and Housing Estimates, January 1989, White Plains, New York, June 1989.

Wolf Creek Nuclear Operating Corporation, Survey Responses from the Wolf Creek Nuclear Operating Corporation, 1990.

C.6.2 AEC and NUREG Final Environmental Statements

AEC Docket 50-206, Final Environmental Statement Related to Operation of San Onofre Nuclear Generating Station, Unit 1, U.S. Atomic Energy Commission, October 1973.

AEC Docket 50-213, Final Environmental Statement Related to the Haddam Neck (Connecticut Yankee) Nuclear Power Plant, U.S. Atomic Energy Commission, October 1973.

AEC Docket 50-220, Final Environmental Statement Related to Operation of Nine Mile Point Nuclear Station, Unit 1, U.S. Atomic Energy Commission, January 1974.

AEC Docket 50-237, Final Environmental Statement Related to Operation of Dresden Nuclear Power Station, Unit 2, U.S. Atomic Energy Commission, November 1973.

AEC Docket 50-244, Final Environmental Statement Related to Operation of R. E. Ginna Nuclear Power Plant, Unit 1, U.S. Atomic Energy Commission, December 1973.

AEC Docket 50-245, Final Environmental Statement Related to the Continuation of Construction of Unit 2 of Millstone Nuclear Power Station, U.S. Atomic Energy Commission, June 1973.

AEC Docket 50-249, Final Environmental Statement Related to Operation of Dresden Nuclear Power Station, Unit 3, U.S. Atomic Energy Commission, November 1973.

AEC Docket 50-250, Final Environmental Statement Related to Operation of Turkey Point Plant, U.S. Atomic Energy Commission, July 1972.

AEC Docket 50-251, Final Environmental Statement Related to Operation of Turkey Point Plant, U.S. Atomic Energy Commission, July 1972.

AEC Docket 50-254, Final Environmental Statement Related to Operation of Quad-Cities Nuclear Power Station, Unit 1, U.S. Atomic Energy Commission, September 1972.

AEC Docket 50-255, Final Environmental Statement Related to Operation of Palisades Nuclear Generating Plant, U.S. Atomic Energy Commission, June 1972.

AEC Docket 50-263, Final Environmental Statement Related to Operation of Monticello Nuclear Generating Plant, U.S. Atomic Energy Commission, November 1972.

AEC Docket 50-265, Final Environmental Statement Related to Operation of Quad-Cities Nuclear Power Station, Unit 2, U.S. Atomic Energy Commission, September 1972.

AEC Docket 50-266, Final Environmental Statement Related to Operation of Point Beach Nuclear Plant, Unit 1, U.S. Atomic Energy Commission, May 1972.

AEC Docket 50-271, Final Environmental Statement Related to Operation of Vermont Yankee Nuclear Power Station, U.S. Atomic Energy Commission, July 1972.

AEC Docket 50-272, Final Environmental Statement Related to Operation of Salem Nuclear Generating Station, Unit 1, U.S. Atomic Energy Commission, April 1973.

AEC Docket 50-277, Final Environmental Statement Related to Operation of Peach Bottom Atomic Power Station, Unit 2, U.S. Atomic Energy Commission, April 1973.

AEC Docket 50-278, Final Environmental Statement Related to Operation of Peach Bottom Atomic Power Station, Unit 3, U.S. Atomic Energy Commission, April 1973.

AEC Docket 50-280, Final Environmental Statement Related to Operation of Surry Power Station, Unit 1, U.S. Atomic Energy Commission, May 1972.

AEC Docket 50-281, Final Environmental Statement Related to Operation of Surry Power Station, Unit 2, U.S. Atomic Energy Commission, June 1972.

AEC Docket 50-282, Final Environmental Statement Related to Operation of Prairie Island Nuclear Generating Plant, U.S. Atomic Energy Commission, May 1973.

AEC Docket 50-285, Final Environmental Statement Related to Operation of Fort Calhoun Station Unit 1, U.S. Atomic Energy Commission, August 1972.

AEC Docket 50-293, Final Environmental Statement Related to Operation of Pilgrim Nuclear Power Station, U.S. Atomic Energy Commission, May 1972.

AEC Docket 50-295, Final Environmental Statement Related to Operation of Zion Nuclear Power Station, Unit 1, U.S. Atomic Energy Commission, December 1972.

AEC Docket 50-298, Final Environmental Statement Related to Operation of Cooper Nuclear Station, U.S. Atomic Energy Commission, February 1973.

AEC Docket 50-301, Final Environmental Statement Related to Operation of Point Beach Nuclear Plant, Unit 2, U.S. Atomic Energy Commission, May 1972.

AEC Docket 50-302, Final Environmental Statement Related to the Proposed Crystal River, Unit 3, U.S. Atomic Energy Commission, May 1973.

AEC Docket 50-304, Final Environmental Statement Related to Operation of Zion Nuclear Power Station, Unit 2, U.S. Atomic Energy Commission, December 1972.

AEC Docket 50-305, Final Environmental Statement Related to Operation of Kewaunee Nuclear Power Plant, U.S. Atomic Energy Commission, December 1972.

AEC Docket 50-306, Final Environmental Statement Related to Operation of Prairie Island Nuclear Generating Plant, U.S. Atomic Energy Commission, May 1973.

AEC Docket 50-309, Final Environmental Statement Related to Operation of Maine Yankee Atomic Power Station, U.S. Atomic Energy Commission, July 1972.

AEC Docket 50-311, Final Environmental Statement Related to Operation of Salem Nuclear Generating Station, Unit 2, U.S. Atomic Energy Commission, April 1973.

AEC Docket 50-312, Final Environmental Statement Related to Operation of Rancho Seco Nuclear Generating Station, Unit 1, U.S. Atomic Energy Commission, March 1973.

AEC Docket 50-317, Final Environmental Statement Related to Operation of Calvert Cliffs Nuclear Power Plant, Unit 1, U.S. Atomic Energy Commission, April 1973.

AEC Docket 50-318, Final Environmental Statement Related to Operation of Calvert Cliffs Nuclear Power Plant, Unit 2, U.S. Atomic Energy Commission, April 1973.

AEC Docket 50-321, Final Environmental Statement for the Edwin I. Hatch Nuclear Plant, Unit 1, U.S. Atomic Energy Commission, October 1972.

AEC Docket 50-322, Final Environmental Statement Related to Operation of Shoreham Nuclear Power Station, U.S. Atomic Energy Commission, September 1972.

AEC Docket 50-324, Final Environmental Statement Related to the Continued Construction and Proposed Issuance of an Operating License for the Brunswick Steam Electric Plant, Unit 1, U.S. Atomic Energy Commission, January 1974.

AEC Docket 50-325, Final Environmental Statement Related to the Continued Construction and Proposed Issuance of an Operating License for the Brunswick Steam Electric Plant, Unit 2, U.S. Atomic Energy Commission, January 1974.

AEC Docket 50-331, Final Environmental Statement Related to Operation of Duane Arnold Energy Center, U.S. Atomic Energy Commission, March 1973.

AEC Docket 50-333, Final Environmental Statement Related to Operation of James A. Fitzpatrick Nuclear Power Plant, U.S. Atomic Energy Commission, March 1973.

AEC Docket 50-334, Final Environmental Statement Related to the Beaver Valley Power Station, Unit 1, U.S. Atomic Energy Commission, July 1973.

AEC Docket 50-335, Final Environmental Statement Related to the St. Lucie Plant, Unit 1, U.S. Atomic Energy Commission, June 1973.

AEC Docket 50-336, Final Environmental Statement Related to the Operation of Units 1 and 2 of Millstone Nuclear Power Station, U.S. Atomic Energy Commission, June 1973.

AEC Docket 50-338, Final Environmental Statement Related to the Continuation of Construction and the Operation of Unit 1 of North Anna Power Station, U.S. Atomic Energy Commission, April 1973.

AEC Docket 50-339, Final Environmental Statement Related to the Continuation of Construction and the Operation of Unit 2 of North Anna Power Station, U.S. Atomic Energy Commission, April 1973.

AEC Docket 50-344, Final Environmental Statement Related to Operation of Trojan Nuclear Plant, U.S. Atomic Energy Commission, August 1973.

AEC Docket 50-348, Final Environmental Statement Related to Operation of Joseph M. Farley Nuclear Plant, Unit 1, U.S. Atomic Energy Commission, December 1974.

AEC Docket 50-352, Final Environmental Statement Related to the Proposed Limerick Generating Station, Unit 1, U.S. Atomic Energy Commission, November 1973.

AEC Docket 50-353, Final Environmental Statement Related to the Proposed Limerick Generating Station, Unit 2, U.S. Atomic Energy Commission, November 1973.

AEC Docket 50-364, Final Environmental Statement Related to Operation of Joseph M. Farley Nuclear Plant, Unit 2, U.S. Atomic Energy Commission, December 1974.

AEC Docket 50-366, Final Environmental Statement for the Edwin I. Hatch Nuclear Plant, Unit 2, U.S. Atomic Energy Commission, October 1972.

AEC Docket 50-404, Final Environmental Statement Related to the Construction of Unit 3 of North Anna Power Station, U.S. Atomic Energy Commission, April 1973.

AEC Docket 50-405, Final Environmental Statement Related to the Construction of Unit 4 of North Anna Power Station, U.S. Atomic Energy Commission, April 1973.

AEC Docket 50-440, Final Environmental Statement Related to the Proposed Perry Nuclear Power Plant, Unit 1, U.S. Atomic Energy Commission, April 1974.

AEC Docket 50-441, Final Environmental Statement Related to the Proposed Perry Nuclear Power Plant, Unit 2, U.S. Atomic Energy Commission, April 1974.

NUREG-0020, vol. 9, Licensed Operating Reactors, Summary Status Report, Nuclear Regulatory Commission, Office of Resource Management, Div. of Budget Analysis, October 1985.

NUREG-0063, Final Environmental Statement Related to Operation of William B. McGuire Nuclear Station, Units 1 and 2, U.S. Nuclear Regulatory Commission, April 1976.

NUREG-0285, Final Environmental Statement Related to Operation of Shoreham Nuclear Power Station, Unit 1, U.S. Nuclear Regulatory Commission, October 1977.

NUREG-0343, Final Environmental Statement Related to Operation of Palisades Nuclear Generating Plant, U.S. Nuclear Regulatory Commission, February 1978.

NUREG-0486, Final Environmental Statement Related to Operation of Lasalle County Nuclear Power Station, Units 1 and 2, U.S. Nuclear Regulatory Commission, November 1978.

NUREG-0490, Final Environmental Statement Related to the Operation of San Onofre Nuclear Generating Station, Units 2 and 3, U.S. Nuclear Regulatory Commission, April 1981.

NUREG-0498, Final Environmental Statement Related to Operation of Watts Bar Nuclear Plant, Units 1 and 2, U.S. Nuclear Regulatory Commission, December 1978.

NUREG-0564, Final Environmental Statement Related to the Operation of Susquehanna Steam Electric Station, Units 1 and 2, U.S. Nuclear Regulatory Commission, June 1981.

NUREG-0719, Final Environmental Statement Related to the Operation of Virgil C. Summer Nuclear Station, Unit 1, U.S. Nuclear Regulatory Commission, May 1981.

NUREG-0769, Final Environmental Statement Related to the Operation of Enrico Fermi Atomic Power Plant, Unit 2, U.S. Nuclear Regulatory Commission, August 1981.

NUREG-0775, Final Environmental Statement Related to the Operation of Comanche Peak Steam Electric Station, Units 1 and 2, U.S. Nuclear Regulatory Commission, September 1981.

NUREG-0777, Final Environmental Statement Related to Operation of Grand Gulf Nuclear Station, Units 1 and 2, U.S. Nuclear Regulatory Commission, September 1981.

NUREG-0779, Final Environmental Statement Related to the Operation of Waterford Steam Electric Station, Unit 3, U.S. Nuclear Regulatory Commission, September 1981.

NUREG-0812, Final Environmental Statement Related to the Operation of WPPSS Nuclear Project No. 2, U.S. Nuclear Regulatory Commission, December 1981.

NUREG-0813, Final Environmental Statement Related to the Operation of Callaway Plant, Unit 1, U.S. Nuclear Regulatory Commission, January 1982.

NUREG-0841, Final Environmental Statement Related to the Operation of Palo Verde Nuclear Generating Station, U.S. Nuclear Regulatory Commission, February 1982.

NUREG-0842, Final Environmental Statement Related to the Operation of St. Lucie Plant, Unit 2, U.S. Nuclear Regulatory Commission, April 1982.

NUREG-0848, Final Environmental Statement Related to the Operation of Byron Station, Units 1 and 2, U.S. Nuclear Regulatory Commission, April 1982.

NUREG-0854, Final Environmental Statement Related to the Operation of Clinton Power Station, Unit 1, U.S. Nuclear Regulatory Commission, May 1982.

NUREG-0895, Final Environmental Statement Related to the Operation of Seabrook Station, Units 1 and 2, U.S. Nuclear Regulatory Commission, December 1982.

NUREG-0921, Final Environmental Statement Related to the Operation of Catawba Nuclear Station, Units 1 and 2, U.S. Nuclear Regulatory Commission, January 1983.

NUREG-0972, Final Environmental Statement Related to the Operation of Shearon Harris Nuclear Power Plant, Units 1 and 2, U.S. Nuclear Regulatory Commission, October 1983.

NUREG-1026, Final Environmental Statement Related to the Operation of Braidwood Station, Units 1 and 2, U.S. Nuclear Regulatory Commission, June 1984.

NUREG-1064, Final Environmental Statement Related to the Operation of Millstone Nuclear Power Station, Unit 3, U.S. Nuclear Regulatory Commission, December 1984.

NUREG-1073, Final Environmental Statement Related to the Operation of River Bend Station, U.S. Nuclear Regulatory Commission, January 1985.

NUREG-1085, Final Environmental Statement Related to the Operation of Nine Mile Point Nuclear Station, Unit 2, U.S. Nuclear Regulatory Commission, May 1985.

NUREG-1087, Final Environmental Statement Related to the Operation of Vogtle Electric Generating Plant, U.S. Nuclear Regulatory Commission, March 1985.

NUREG-1094, Final Environmental Statement Related to the Operation of Beaver Valley Power Station, Unit 2, U.S. Nuclear Regulatory Commission, September 1985.

NUREG-1171, Final Environmental Statement Related to the Operation of South Texas Project, Units 1 and 2, U.S. Nuclear Regulatory Commission, August 1986.

NUREG-75/097, Final Environmental Statement Related to Operation of Davis-Besse Nuclear Power Station, Unit 1, U.S. Nuclear Regulatory Commission, October 1975.

C.7 Tables

[**Prev** | **Next** | **Top of file**]

Appendix D: Aquatic Microorganisms and Human Health

[**Prev** | **Next** | **Top of file**]

Some aquatic microorganisms normally present in surface waters whose presence may be enhanced by thermal additions have been recognized as pathogenic for humans. Among these are *Salmonella* species (sp.), *Shigella* sp.,

Pseudomonas sp., thermophilic fungi, Legionnaires' disease (LD) bacteria *[Legionella (L.)* sp.], and the free- living amoebae of the genera *Naegleria*(N.) sp., the causative agents of various human infections.

Salmonella sp. is classified as a facultative intracellular parasite that has an incubation period of 10 to 14 days and can cause symptoms that include continued fevers, intestinal inflammation, formation of intestinal ulcers, splenic enlargement, toxemia, and the production of a characteristic "rose-spot" eruption on the abdomen. These bacteria are usually associated with areas of poor sanitation but can also be transmitted by the common house fly. The organisms do not multiply in water but can live for several weeks in water and can be transported over large distances.

Shigella sp. is similar to *Salmonella* sp. in its mode of transmission but has a much shorter incubation period (1 to 7 days). It produces severe dysentery with production of a potent exotoxin. The optimum growth temperature for the organism is 37?C (99?F), but it can grow at much higher temperatures.

Aeromonas sp. is also a facultative anaerobe and has been isolated from tap water, rivers, soil, and marine environments, as well as various foods. It has been isolated from healthy individuals, as well as those with diarrheal symptoms. It is primarily an opportunistic pathogen, although some strains produce a potent enterotoxin that increases its pathogenicity.

Pseudomonas aeruginosa can be found in soil, humidifiers, hospital respirators, water, and sewage and on the skin of healthy individuals. Certain strains can produce a potent endotoxin, and the organism can cause symptoms that include fever, bacteriuria, bacteremia, pneumonia, otitis, and opportunistic wound and ophthalmic infections. The organism can survive and grow in a wide range of environmental conditions.

Actinomycetes are ubiquitous and can be found in soil, water, and the oral flora of man (usually associated with caries). Infections are primarily opportunistic, but very aggressive strains can produce pulmonary disease; cervical or intestinal infections are not uncommon. This organism can also survive a wide range of environmental conditions, with thermophilic types being the most pathogenic.

Although the above-mentioned organisms are ubiquitous, the ingestion or inhalation of small quantities of these organisms would not adversely affect the health of individuals who are not immunosuppressed. However, inhalation of endotoxins and exotoxins produced by several of these organisms, which are readily aerosolized, may theoretically affect even healthy individuals who come in contact with mist, vapor, or minute droplets of water. No reports have been identified that suggest such occurrences in power plant workers. *Legionella* sp. infections, on the other hand, can be infectious for uncompromised healthy workers.

The clinical significance of *Legionella* sp. was dramatized by the namesake outbreak in 1976 at an American Legion convention in Philadelphia (McDade et al. 1977). At this convention more than 100 people became ill and 34 died. After an intensive effort, laboratory isolations were made of the causative agent, L. *pneumophila*. Since 1977, various serogroups of L. *pneumophila* and more than 30 species of *Legionella* have been discovered (Thornsberry et al. 1984). *Legionella* sp. are gram- negative rods approximately 0.5 ? 2.4 ?m in size. Infection generally occurs by inhalation of the aerosolized bacteria. Two disease syndromes can be manifested by infection with *Legionella* sp. Legionnaires' Disease is a pneumonia with associated cough, fever, and malaise (Lattimer and Ormsbee 1981). The disease can be fatal, although Erythromycin is effective in treating it. Legionellosis may also be expressed as Pontiac fever, a nonpneumonic, flu-like illness that also responds to Erythromycin therapy (Fraser et al. 1979).

Estimates of the number of cases of Legionellosis range from 25,000 to 200,000 per year (W. H. Wilkinson, telephone interview with R. L. Tyndall, Oak Ridge National Laboratory, Oak Ridge, Tenn., 1982). Some of the known Legionellosis outbreaks were traceable to the aerosolization of water-borne *Legionella* sp. by cooling towers and evaporative condensers (NUREG/CR-1207; Berendt et al. 1980). The cooling devices are presumably seeded with *Legionella* sp. from their potable and natural water supplies. That *Legionella* sp. in fact are normal components of the aquatic flora was first demonstrated by Fliermans et al. (1981) and has been confirmed by subsequent studies (Fliermans 1985). In view of this ubiquity in natural surface waters, it is not surprising that water in cooling towers and

evaporative condensers contains *Legionella* sp. These devices can then amplify *Legionella* sp. concentrations and disperse the pathogen through aerosolization.

In contrast to *Legionella* sp., the presence of *Naegleria*sp. in water and soil was known before their clinical significance was recognized. Butt (1966) and Carter (1970) described the first cases of *Naegleria*sp. infection in Floridian and Australian children who were infected by swimming or bathing in *Naegleria*sp.-infested waters. *Naegleria*sp. are small amoebae capable of using dissolved organic material or gram-negative bacteria as a food source. They are eukaryotic cells that generally have a single nucleus and a centrally located nucleolus. Locomotion is by means of eruptive pseudopodia. Four species of *Naegleria* have been isolated. *N. gruberi* and *N. jadini* have not shown any pathogenic potential in experimental animals or in man. *N. australiensis* is pathogenic for mice but as yet has not been implicated in human diseases. *N. fowleri* is pathogenic for humans and mice (Rondanelli 1987).

On entry into the nasal passage of a susceptible individual, *N. fowleri* will penetrate the nasal mucosa and migrate along the olfactory nerve through the cribriform plate to the cerebrum. The ensuing infection results in a rapidly fatal meningoencephalitis (Rondanelli 1987). Antibiotic therapy is generally ineffectual. Fortunately, primates in general are resistant to infection with *N. fowleri*. This has been demonstrated in laboratory studies with chimpanzees and in epidemiologic studies at sites where fatal cases of primary amoebic meningoencephalitis (PAME) occurred (Wong et al. 1975). In such cases, hundreds of individuals were exposed, but only a single case of PAME occurred. Reasons for the susceptibility of the occasional individual are unknown. After reports of fatal cases of PAME in Australia and Florida, other cases of PAME were reported. Sources of infections included heated swimming pools (Cerva 1971), thermal springs (Hecht et al. 1972), and a variety of naturally or artificially heated surface waters (Fliermans et al. 1979; DeJonckheere 1978). One of the largest clusters of PAME occurred in Virginia, where 16 cases were reported over a 9-year period (Duma et al. 1971). Unlike the thousands of cases of Legionellosis per year in the United States alone, only 100 to 200 cases of PAME have been reported to date worldwide. Hallenbeck and Brenniman (1989) reviewed the world literature to derive a risk analysis model that would be helpful in the management of PAME. They concluded that the management of PAME risk was difficult; the prevention, almost impossible. However, they estimated the lifetime risk of PAME to be 4 ? 10-5, assuming 10 exposures per swimming season and 10 swimming seasons. As with *Legionella* sp., simple, rapid assays for detecting and quantifying *N. fowleri* in aquatic environments are not generally available.

In 1981, cooling waters of 11 nuclear power plants and associated control source waters were studied for the presence of thermophilic free-living amoebae, including *N. fowleri*. Presence of pathogenic *N. fowleri* was demonstrated by mouse inoculations. While all but one test site was positive for thermophilic free-living amoebae, only two test sites were positive for pathogenic *N. fowleri.* Pathogenic *N. fowleri* were not found in control source waters (NUREG/CR-2980). A recent analysis of heated water from a nuclear plant that began operations within the past 3 years also showed the presence of *N. fowleri*. Water from the plant impacts a public swimming area (Huizinga and McLaughlin 1990).

In addition to testing for pathogenic amoebae in cooling waters, the 11 nuclear power plants in the 1981 study were also studied for the presence of *Legionella* sp. (NUREG/CR-2980). Concentrations of *Legionella* sp. were determined microscopically by fluorescent antibody analysis, and infectious *Legionella* sp. were demonstrated by guinea pig inoculation. In general, the artificially heated waters showed only a slight increase (i.e., ? 10-fold) in concentrations of *Legionella* sp. relative to source water. In a few cases, source waters had higher levels than did heated waters. Infectious *Legionella* sp. were found in 7 of 11 test waters and 5 of 11 source waters.

Subsequently, a more detailed study of *Legionella* sp. presence in the environs of coal-fired electric power plants was undertaken to determine the distribution, abundance, and infectivity and aerosolization of *Legionella* sp. in power plant cooling systems (NUREG/CR- 3364; EPRI/EA-4017; EPRI/EA-3153).

This study found that the infrequent occurrence of positive air samples at locations not adjacent to cleaning operations suggests that aerosolized *Legionella* sp. associated with downtime procedures have minimal impact beyond these locations. Even within plant boundaries, detectable airborne *Legionella* sp. appear to be confined to very limited areas. In these areas, however, the more contact individuals have with the most concentrated *Legionella* sp. populations--

particularly if these become aerosolized as they do in some downtime operations--the more likely it becomes that workers may be exposed.

Exposure to *Legionella* sp. from power plant operations, while a potential problem for a subset of the work force, would not generally impact the public because concentrated aerosols of the bacteria would not traverse plant boundaries. Plant personnel most likely to come in contact with *Legionella* aerosols would be workers who dislodge biofilms, where *Legionella* are often concentrated, such as during cleaning of condenser tubes and cooling towers. Since Legionellosis is a respiratory disease, workers engaged in such activities should be protected by wearing appropriate respiratory protection.

Because the route of infection with N. *fowleri* is nasal, workers exposed to aerosols of this pathogen also should be protected with respiratory protection. If involved in underwater maintenance or other activities associated with thermally altered discharge waters known to harbor N. *fowleri*, workers should wear appropriate gear to prevent entry of the amoebae into the nasal cavity. The observed risk to swimmers from waters infected with *N. fowleri* is low but not zero (Hallenbeck and Brenniman 1989). Nevertheless, heavily used bodies of fresh water merit special attention and possibly routine monitoring for pathogenic *Naegleria*. Policies for public swimming and water skiing in plant discharges known or suspected to harbor *N. fowleri* should be reviewed by state health departments. Since *Naegleria*concentrations in fresh water can be enhanced by thermal additions, nuclear power plants that utilize cooling lakes, canals, ponds, or small rivers may enhance the naturally occurring thermophilic organisms.

References

[**Prev** | **Next** | **Top of file**]

Berendt, R. F., et al., "Dose-Response of Guinea Pigs Experimentally Infected with Aerosols of Legionella pneumophila," Journal Infectious Diseases, 141(2), 186, 1980.

Butt, C., "Primary Amoebic Meningoen- cephalitis," New England Journal of Medicine, 274, 1473-76, 1966.

Carter, R. F., "Description of a Naegleria sp. Isolated from Two Cases of Primary Amoebic Meningoencephalitis," Journal of Pathology, 100, 217-44, 1970.

Cerva, L., "Studies of Limax Amoebae in a Swimming Pool," Hydrobiologia, 38, 141-61, 1971.

DeJonckheere, J. F., "Quantitative Study of Naegleria fowleri in Surface Waters," Protistogica, 14, 475-81, 1978.

Duma, R. J., et al., "Primary Amoebic Meningoencephalitis: A Survey in Virginia," Archives of Environmental Health, 23, 43-47, 1971.

EPRI/EA-3153, S. W. Christensen et al., Legionnaire's Disease Bacterium in Power Plant Cooling Systems: Phase I Final Report, Electric Power Research Institute, Palo Alto, California, 1983.

EPRI/EA-4017, R. L. Tyndall et al., Legionnaires' Disease Bacteria in Power Plant Cooling Systems: Phase II Final Report, Electric Power Research Institute, Palo Alto, California, 1985.

Fliermans, C. B., et al., "Isolation of Naegleria fowleri from Artificially Heated Waters," Journal Thermal Biology, 4, 303-6, 1979.

Fliermans, C. B., et al., "Ecological Distribution of Legionella pneumophila," Applied Environmental Microbiology, 41 (1), 9-16, 1981.

Fliermans, C. B., "Ecological Niche of Legionella pneumophila," Critical Reviews in Microbiology, 1985.

Fraser, D. W., et al., "Nonpneumonic, Short-Incubation-Period Legionellosis (Pontiac Fever) in Men Who Cleaned a Steam Turbine Condenser," Science, 205, 690-91, 1979.

Hallenbeck, W. H., and G. R. Brenniman, "Risk of Fatal Amoebic Meningoencephalitis from Waterborne Naegleria fowleri," Environmental Management, 13(2), 227-32, 1989.

Hecht, R. H., et al., "Primary Amebic Meningoencephalitis in California," California Medicine, 117, 69-73, 1972.

Huizinga, H. W., and G. L. McLaughlin, "Thermal Ecology of Naegleria Fowleri from a Power Plant Cooling Reservoir," Applied Environmental Microbiology, 2200-05, July 1990.

Lattimer, G. L., and R. A. Ormsbee, Legionnaires' Disease, Mercel Dekker, New York, 1981.

McDade, J. E., et al., "Legionnaires' Disease: Isolation of a Bacterium and Demonstration of Its Role in Other Respiratory Disease," New England Journal of Medicine, 297, 1197-203, 1977.

NUREG/CR-1207 (ANL/ES-83), A. P. Adams and B. A. G. Lewis, Microbial Aerosols from Cooling Towers and Cooling Sprays: A Pilot Study, Argonne National Laboratory, Argonne, Illinois, 1979.

NUREG/CR-2980, R. L. Tyndall, Presence of Pathogenic Micro- Organisms in Power Plant Cooling Waters, Report for October 1, 1979 to September 30, 1981, Oak Ridge National Laboratory, Oak Ridge, Tennessee, 1981.

NUREG/CR-3364 (ORNL/TM-8809), R. L. Tyndall, Presence of Pathogenic Microorganisms in Power Plant Cooling Waters: Final Report for October 1, 1981, to June 30, 1983, Oak Ridge National Laboratory, Oak Ridge, Tennessee, 1983.

Rondanelli, E. G., ed., "Infectious Diseases," Color Atlas Monographs 1, Amphizoic Amoebae Human Pathology, Piccin, Pavia, Italy, 1987.

Thornsberry, C., et al., eds., Legionella Proceedings of the 2nd International Symposium, American Society for Microbiology, Washington, D.C., 1984.

Wong, M. M., et al., "Experimental Infections with Pathogenic Free-Living Amoebae in Laboratory Primate Hosts. (A) A Study of Susceptibility to N. fowleri," Journal Parasitol, 61, 199- 208, 1975.

Appendix E: Radiation Protection Considerations for Nuclear Power Plant License Renewal

[**Prev** | **Next** | **Top of file**]

Radiological issues are associated with the process of refurbishment and with normal operation in the period after license renewal. Both occupational personnel and members of the public will be affected by these processes as a result of radiation exposures in the plants and as a result of small losses of radioactive materials in the gaseous and liquid effluents.

This appendix is intended to provide pertinent background information for analyses and to supplement discussions in the Generic Environmental Impact Statement (GEIS).

E.1 The Regulatory Standards Process

[**Prev** | **Next** | **Top of file**]

Government agencies establish basic radiation protection standards that are consistent with guidance to federal agencies issued by the President. This guidance is prepared by interagency committees and reflects recommendations published by expert groups such as the International Commission on Radiological Protection (ICRP) and the National Council on Radiation Protection and Measurements (NCRP). In the preparation of their reports, the ICRP and NCRP scientific committees rely heavily on information published by the United Nations Scientific Committee on the Effects of Atomic Radiation (UNSCEAR) and other publicly available information. The UNSCEAR reports contain detailed radiobiological and epidemiological information that has been acquired on a worldwide basis. Through this system, the U.S. federal agencies maintain consistency in their basic standards, and scientific consensus on an international basis is ensured. The standards are published in the *Federal Register* for public comment before issuance in final form, and public hearings are often held.

E.2 Radiation Protection Standards

[**Prev** | **Next** | **Top of file**]

E.2.1 Occupational

E.2.1.1 Basic Standards

The occupational radiation protection standards of primary interest are those for exposure of the whole body. These standards have changed at different times, as shown in Table E.1. The downward trend is evident, from 1.0 R/week (or 50 R/year) in 1947 to the current 5.0 rem/year total effective dose equivalent (TEDE). The table does not reveal the fact that, before introduction of the TEDE quantity, the permitted dose from radionuclides deposited in the body was in addition to the permitted dose from external sources. The dose data for nuclear power plant (NPP) workers are presented in Section E.3.1.

The U.S. Atomic Energy Commission (AEC) regulatory/Nuclear Regulatory Commission (NRC) standards in 10 CFR Part 20 have changed infrequently. Tables E.2 and E.3 present a summary of the occupational standards which were in effect from 1960 through 1990 (old Part 20) and standards in effect from 1991 (new Part 20). On an annual basis, the whole-body limit has decreased from 15 R (3 R/quarter) in 1957

Table E.1 Occupational radiation dose limits for the whole body[a]

Year	NCRP[b]	ICRP[b]	Federal guidance	AEC/DOE[b]	AEC-REG/NRC[b]
1947	0.1/day 0.5/week	0.2/day 1.0/week	--	0.1/day	--
1949	0.3/week	--	--	--	--
1950	--	3.0/week	--	0.3/week	--
1954	3.0/quarter 0.3/week	--	--	3.0/quarter 0.3/week	--
1957	--	--	--	--	0.3/week
1958	3.0/quarter 5.0/year average	--	--	3.0/quarter 0.3/week 5.0/year average	--
1960	--	--	3.0/quarter 5.0/year average	3.0/quarter 5.0/year average	--
1961	--	--	--	--	1.25/quarter or 3.0/quarter with 5.0/year average
1965	--	3.0/quarter 5.0/year maximum	--	--	--

1971	3.0/quarter 5.0/year maximum	--	--	--	--
1977	--	5.0/year EDE	--	--	--
1987	5.0/year EDE	--	5.0/year EDE	--	--
1988	--	--	--	5.0/year EDE	--
1991	--	--	--	--	5.0/year TEDE

[a]
Units: 1947-57, the roentgen; 1958-76, the rem dose equivalent (DE); 1977 to present, the rem effective dose equivalent (EDE). The rem unit signifies the DE quantity except for the final entry in each column, where the quantity is the EDE. EDE is external, internal, or both. The ICRP has announced its intention to reduce its limit to 2 rem/year total EDE, with a provision for operational flexibility. To convert rem to sievert, multiply by 0.01.

[b]NCRP = National Council on Radiation Protection and Measurements; ICRP = International Council on Radiation Protection; AEC = Atomic Energy Commission; DOE = U.S. Department of Energy; NRC = Nuclear Regulatory Commission.

(external radiation only) to 5 rem effective dose equivalent (EDE) (external plus internal). Regulatory control over the intake of radioactive materials in the workplace has always been a complex issue. Details are presented as a matter of interest in Attachment E.A. Before the new Part 20, limits on the intake of radioactive material into the body were based on the critical organ concept. The critical organ for a nuclide was the organ receiving the greatest radiation insult (considering its dose limit)

Table E.2 Occupational dose limits for adults under "Old Part 20" guidelines[a]

Tissue	External radiation	Internal radiation
Whole body	3 rem/quarter maximum, 5 rem/year average	
Lens	3 rem/quarter maximum, 5 rem/year average	
Extremities, including skin	18.75 rem/quarter	
All other skin	7.5 rem/quarter	
Thyroid		30 rem/year
Bone		30 rem/year
Marrow		5 rem/year
Gonads		5 rem/year
All other organs		15 rem/year

[a] Old Part 20 guidelines were in effect since 1960; the new Part 20 came into effect in 1991.
Note: To convert rem to sievert, multiply by 0.01.

from the intake of a specific radionuclide in a certain chemical form. AEC/NRC licensees were required to limit the quarterly intake of a given radionuclide to an amount that, under equilibrium conditions (rate of intake equal to the rate loss by decay or elimination), would deliver to the critical organ a dose equal to the limit for that organ. (The dose to the organ from radiation sources external to the body was not considered.) If a nuclide would not achieve equilibrium in the critical organ within 50 years, the quarterly intake limit would produce, at the end of 50 years, an annual dose equal to the limit for that organ.

This method of control did not take into consideration the risk to organs other than the critical organ. Beginning in 1991, NRC abandoned the critical organ approach in favor of the method published by the ICRP in its Publication 26 (described in Attachment E.A). Under the ICRP method, the dose to each significantly irradiated organ is weighted according to its sensitivity. The weighted doses are summed to produce an EDE that can be added to the dose from external sources.

The revised Part 20 provides additional flexibility for establishing more accurate dose controls. It allows the use of actual particle-

Table E.3 Occupational dose limits for adults under "New Part 20" guidelines[a]

Tissue	External radiation	Internal plus external radiation
Whole body	5 rem/year total dose equivalent,[b] not to exceed 50 rem/year total dose equivalent to any individual organ or tissue other than the lens of the eye	5 rem/year total effective dose equivalent,[c] not to exceed 50 rem/year total dose equivalent to any individual organ or tissue other than the lens of the eye
Lens	15 rem/year	
Extremities, including skin	50 rem/year	
All other skin	50 rem/year	
Thyroid		
Bone		
Marrow		
Gonads		
All other organs		

[a]New Part 20 guidelines became effective in 1991.

[b]The total dose equivalent is the sum of the external dose equivalent (at 1 cm depth) and the committed dose equivalent from nuclides deposited in the body.

[c]The total effective dose equivalent is the sum of the external dose equivalent (at 1 cm depth) and the committed effective dose equivalent from nuclides deposited in the body.

Note: To convert rem to sievert, multiply by 0.01.

size distribution and physiochemical characteristics of airborne particulates to define site-specific derived air concentration limits. With NRC approval, these modified concentration limits can be used in lieu of generic values provided in Part 20. Such adjustments result in the use of more precise estimates that use actual exposure conditions as compared with generic assumptions. Although these adjustments might permit higher airborne radionuclide concentration limits to be used, the same degree of health protection would exist because the radiation dose (and risk) would remain the same as that intended in the generic values.

E.2.1.2 ALARA

Following the accident at Three Mile Island, the NRC required a number of improvements that caused the industry-wide annual collective dose (and the individual annual average) to increase temporarily. However, for two primary reasons, these dose values soon began to decrease and have continued to do so. First, the NRC and a new industry organization, the Institute of Nuclear Power Operations, began to demand better performance with respect to dose reduction. Second, additional risk information, primarily from the atomic bomb survivor study, became available. In 1977, the ICRP adopted risk estimates of 1.25 cancer fatalities and 0.4 serious genetic effects among 10,000 people (and their progeny for two generations) receiving 10,000 person-rem (ICRP Publication 26); in 1980, the National Academy of Sciences (NAS) published a revision of the 1972 Biological Effects of Ionizing Radiation (BEIR-I) report. The new report, BEIR-III, contained a range of radiation-risk estimates that, together with the ICRP estimate, caused the risk value previously mentioned to be doubled. It was recognized that the resulting 5 percent fatality estimate (to be associated with 5 rem/year for a working lifetime) was derived from instantaneous exposure, that actual lifetime occupational doses were far fewer than 250 rem as used in the estimate, and that the estimate was therefore of limited use in the standards development process. However, largely because of nonquantitative information indicating that instantaneous radiation was more carcinogenic than had been believed, efforts to ensure that radiation doses were as low as reasonably achievable (ALARA) were redoubled. Without specific regulations, the average annual occupational dose for the nuclear power plant (NPP) worker population fell below 0.5 rem, meeting or exceeding the ICRP overall

occupational risk criterion of 1 fatality per 10,000 workers per year (ICRP Publication 26). In 1968, the percentage of NPP workers who received more than 5 rem was 0.5 percent, and three persons had doses in excess of 12 rem. By 1986, the percentage of workers receiving more than 5 rem was less than 0.01 percent, and no individual received more than 12 rem.

Two regulatory guides have been issued to provide guidance on ALARA programs for NPPs, one on ALARA philosophy (NRC Regulatory Guide 8.10, Rev. 1R) and one on implementation (NRC Regulatory Guide 8.8, Rev. 3). NPP licensees are required to maintain and implement adequate plant procedures that contain ALARA criteria. During plant licensing, applicants commit to implement ALARA programs consistent with Regulatory Guides 8.8 and 8.10. The 1991 revision to 10 CFR Part 20 codifies this requirement that licensees implement a program to maintain radiation doses ALARA. Compliance with the commitments is required through 10 CFR Part 50 and the technical specifications.

Recent developments among the Japanese atomic bomb survivors (as discussed in Section E.4) have revealed that gamma (and possibly neutron) radiation delivered uniformly at high doses and high dose rates is an even more efficient carcinogen than was believed (RERF TR 12-87). The new occupational risk estimates that result imply that an average annual dose of 0.5 rem may not meet the ICRP criteria of one fatality per year among 10,000 workers. ICRP has published revised recommendations concerning dose limits. Increased emphasis on the ALARA concept is therefore indicated and is adopted in the 1991 revision of Part 20.

E.2.2 Public

E.2.2.1 Basic Standards for Dose from Controlled Sources

The current federal guidance on radiation protection for the general public was issued in 1960 (FR 25, 97, May 18, 1960) and is now undergoing revision by an interagency committee chaired by the U.S. Environmental Protection Agency (EPA). The annual dose-equivalent limit for the whole body specified in the 1960 guidance is 0.5 rem.

For many years, the ICRP and NCRP recommended dose limits for the public that were 10 percent of those for workers. During the 1980s, both organizations adopted a more conservative value of 2 percent. In 1985, following a meeting of the ICRP in Paris, France, the ICRP released a statement that its principal limit for the whole body is 0.1 rem/year EDE (ICRP 1985). However, a subsidiary limit of 0.5 rem/year is authorized provided that the average dose does not exceed 0.1 rem/year. The ICRP limit for the skin and lens of the eye is 5 rem/year. In 1987, the NCRP recommended limits of 0.1 rem/year EDE for the whole body under conditions of continuous or frequent exposure and 0.5 rem/year for infrequent exposure (NCRP 1987). The NCRP limit for the lens of the eye, skin, and extremities is 5 rem/year.

Prior to the 1991 version of 10 CFR Part 20, the AEC and NRC required applicants for a license to operate a nuclear facility to demonstrate that an individual would be unlikely to receive in excess of 0.5 rem to the whole body in a year. In 1991, a limit of 0.1 rem/year EDE was imposed.

With regard to limits on radioactive material deposited in the body, until the advent of the EDE, annual average concentration values [or maximum permissible concentrations (MPCs)] were specified that would deliver (under equilibrium conditions) the following doses to critical organs: thyroid and bone, 1 rem/year; whole body and gonads, 0.05 rem/year; all other organs, 0.5 rem/year (ICRP 1960). The MPCs were recommended by the ICRP and NCRP and used in 10 CFR Part 20 (until 1991). The revised Part 20 employs the annual limits on intake (ALIs) and derived air concentrations (DACs) now recommended by these organizations. When these values are used, the EDE is limited to 0.1 rem/year. To provide additional protection for children and others who are smaller than the "reference man" used for the calculation of the ALIs, the new 10 CFR Part 20 specifies ALIs and DACs based on 0.05 rem/year.

E.2.2.2 ALARA Standards

In addition to the basic standards mentioned above, 10 CFR Part 50.36(a) contains license conditions that are imposed on licensees in the form of technical specifications applicable to effluents from nuclear power reactors. These specifications will ensure that releases of radioactive materials to unrestricted areas during normal operations, including expected operational occurrences, remain ALARA. Appendix I to 10 CFR Part 50 provides numerical guidance on dose -design objectives and limiting conditions for operation for light-water reactors (LWRs) to meet the ALARA requirements. As a part of the licensing process, all licensees have provided reasonable assurance that the design objectives will be met for all unrestricted areas. 10 CFR Part 20 requires compliance with EPA regulation 40 CFR Part 190, which also contains ALARA limits. The dose constraints are summarized in Tables E.4 and E.5.

E.3 Nuclear Power Plant Exposure Data

[**Prev** | **Next** | **Top of file**]

E.3.1 Occupational

E.3.1.1 Past Data

Individual occupational doses are measured by NRC licensees as required by the basic NRC radiation protection standard, 10 CFR Part 20. The measurement results of primary interest are those recorded for exposure of the whole body to radiation from sources that are external to the body. The whole-body dose must be determined at a depth of 1 cm from the surface of the body. Measurements of the whole-body dose are normally derived from personal dosimeters worn by each worker. Since 1984, many of the NPPs have provided dosimetry programs accredited by the National Bureau of Standards [NBS, now National Institute of Standards and Technology (NIST)]; in general, ±50 percent accuracy is required. In 1988, NBS/NIST accreditation became an NRC requirement.

Whole-body dose data from NRC-licensed LWRs are shown in Tables E.6 and E.7 for the years 1973 through 1992. For each year, the number of reactors, the number of workers receiving measurable exposures, the workers' average annual dose, the collective (person-rem) dose for all reactors combined, and the number of individuals exceeding 12 rem are given. (The collective dose is the sum of all personal doses.) The collective and average annual doses appear to be leveling at about 30,000 person-rem and 0.3 rem respectively.

With regard to individual doses, Table E.8 reveals that fewer than 500 workers (0.5 percent) received whole-body doses exceeding 2 rem during 1992. No worker exposure exceeded 5 rem during that calendar year.

The NRC regulates the dose to the gonads and the lens of the eye by including those organs in the definition of whole body. Also included in this definition are the blood-forming organs, which are susceptible to radiation-induced leukemia. No other organs are specifically named in the definition. The dose to the extremities and the skin is regulated, although higher doses are allowed because of the lower risks. The data presented in Tables E.6-E.8 for the whole body apply to the gonads, eye lens, and bone marrow as well (neglecting attenuation). Data for the extremities and skin are recorded by licensees, but these data are listed in NRC reports only in connection with regulatory overexposures. NPP workers are exposed to airborne radioactive material--primarily fission and corrosion products--but such exposures have normally been small in comparison with external doses. Under old Part 20, licensees were not required to report inhalation exposures unless a quarterly intake limit was exceeded. Therefore, reports of internal dose issued by NRC included overexposures only. Some NPP licensees voluntarily include internal dose data in employee termination dose reports to NRC. A study of these data indicated that for ^{58}Co and ^{60}Co, the most prevalent nuclides, very few of the workers had organ burdens of more than 1 percent of the maximum permissible (see Tables E.9, E.10, and E.11).

These data indicate that occupational exposures within the nuclear power industry have been significantly reduced since 1973. Individual doses are characteristically far

Table E.4 Ten CFR Part 50, Appendix I, design objectives and annual limits on radiation doses to the general public from nuclear power plants[a]

Tissue	Gaseous	Liquid
Total body	5 mrem	3 mrem
Any organ (all pathways)	--	10 mrem
Ground-level air dose	10 mrad gamma and 30 mrad beta	--
		--
Any organ[b] (all pathways)	15 mrem	--
Skin	15 mrem	

[a]Calculated doses.

[b]Particulates, radioiodines.

Note: To convert millirem to millisievert, multiply by 0.01.

Table E.5 Forty CFR 190, Subpart B, annual limits on doses to the general public from nuclear power operations[a]

Tissue	Limit	Source
Total body	25 mrem	All effluents and direct radiation from nuclear power operations
Thyroid	75 mrem	"
Any other organ	25 mrem	"

[a]Calculated doses.

Note: To convert millirem to millisievert, multiply by 0.01.

below the regulatory limit currently in effect, and the annual average is less than 10 percent of the 5 rem/year limit that is now in effect. Effective implementation of the ALARA concept is largely responsible. The theoretical risks associated with the exposure data are discussed in Section E.4.

E.3.1.2 Considerations for the Future

The current 10 CFR Part 20 became effective in 1991. The new regulation adopted a 5-rem/year TEDE dose limit and applies this limit to external and internal doses combined. Although these constraints

Table E.6 Occupational whole-body dose data at light-water reactors

Year	Number of workers with measurable doses	Collective dose (person-rem)	Average annual dose (rem)	Number of reactors	Number of persons exceeding 12 rem in a year
1973	14,780	13,962	0.94	24	1
1974	18,139	13,650	0.75	33	1
1975	25,419	20,879	0.82	44	1
1976	34,192	26,107	0.76	52	3
1977	42,266	32,508	0.77	57	1
1978	45,978	31,801	0.69	64	3
1979	64,073	39,982	0.62	67	1
1980	80,331	53,795	0.67	68	0
1981	82,106	54,144	0.66	70	1
1982	84,381	52,190	0.62	74	0
1983	85,646	56,472	0.66	75	0
1984	90,099	55,235	0.56	78	0
1985	92,870	43,042	0.46	82	2
1986	100,923	42,381	0.42	90	0
1987	104,334	40,401	0.39	96	0
1988	103,226	40,769	0.39	102	0

1989	108,252	35,930	0.33	107	0
1990	108,658	36,592	0.34	110	0
1991	98,761	28,515	0.29	111	0
1992	103,143	29,309	0.28	110	0

Source: NUREG-0713.

Note: To convert rem to sievert, multiply by 0.01.

Table E.7 Light-water reactor (LWR) occupational whole-body dose data for boiling-water reactors (BWRs) and pressurized-water reactors (PWRs)

	Annual average whole-body dose (rem)		
Year	All LWRs	All BWRs	All PWRs
1973	0.94	0.85	1.00
1974	0.74	0.81	0.68
1975	0.82	0.86	0.76
1976	0.75	0.71	0.79
1977	0.84	0.89	0.65
1978	0.74	0.74	0.65
1979	0.66	0.73	0.56
1980	0.72	0.87	0.52
1981	0.71	0.73	0.61
1982	0.66	0.76	0.53
1983	0.70	0.82	0.56
1984	0.59	0.66	0.49
1985	0.46	0.54	0.41
1986	0.42	0.51	0.37
1987	0.39	0.40	0.38
1988	0.40	0.45	0.36
1989	0.34	0.36	0.33
1990	0.34	0.38	0.31
1991	0.29	0.31	0.27
1992	0.28	0.32	0.26

Source: NUREG-0713.

Note: To convert rem to sievert, multiply by 0.01.

Table E.8 Number of workers at boiling-water reactor (BWR), pressurized-water reactor (PWR), and light-water reactor (LWR) installations who received whole-body doses within specified ranges during 1992

Dose range (rem)	BWRs	PWRs	LWRs
<0.1 (measurable)	17,740	28,220	45,960
0.1-0.25	8,094	12,503	20,597
0.25-0.5	6,883	10,259	17,142
0.5-0.75	3,995	4,926	8,881
0.75-1.00	2,339	2,287	4,626
1.00-2.00	2,366	2,602	5,468
2.00-3.00	204	245	449
3.00-4.00	11	6	17
4.00-5.00	3	0	3

5.00-6.00	0	0	0
6.00-7.00	0	0	0
7.00-12.00	0	0	0
>12.00	0	0	0
Totals	42,095	61,048	103,143

Source: NUREG-0713.

Note: To convert rem to sievert, multiply by 0.01.

are more stringent, they are not expected to have a significant impact on occupational exposures at NPPs for three reasons. First, the new regulation requires external/internal dose addition only if each type of exposure separately exceeds 0.5 rem in a year. Very few, if any, NPP workers are expected to exceed 0.5 rem from internal sources. Second, although the ICRP system being adopted by the NRC involves the determination of organ doses from external sources (as opposed to the whole-body dose at 1-cm depth), the new 10 CFR Part 20 continues to require measurement at 1 cm. Third, data in Tables E.6 and E.8 show that few, if any, workers will be affected by a reduction in the limit from essentially 12 to 5 rem/year.

The ICRP has announced its intention to reduce the 5-rem/year limit, which it currently recommends, to 2 rem/year, with a provision for maintaining operational flexibility (Radiological Protection Bulletin, No. 111). In ICRP-60, it is suggested that the 2 rem/year be applied over defined periods of 5 years. Further, provision is made that the effective dose should not exceed 5 rem in any single year.

Table E.9 Organ burden estimates submitted on employment termination reports from power reactors, 1975-1981

Year	Nuclide	Number of records	Organ burden estimates
1975	^{58}Co	22	all burdens <1% MPOB[a]
	60Co	22	all burdens <1% MPOB
1980	^{58}Co	1410	98% of burdens <1% MPOB
	60Co	5098	98% of burdens <2% MPOB
1981	^{58}Co	1246	98% of burdens <1% MPOB
	60Co	4418	98% of burdens <2% MPOB

[a] MPOB = maximum permissible organ burden.
Source: NUMARC (1989).

Table E.10 Estimated number of workers with organ burdens (in % MPOB[a]) from>Co and ^{137}Cs, 1983-1987[b]

Year	<1%	1-2%	2-3%	>3%
1983	8042	2	0	1
1984	5024	4	0	3
1985	2744	0	0	0
1986	2255	4	1	4
1987	1154	0	0	0

[a]MPOB = maximum permissible organ burden.
[b]Data taken from termination reports for employees of power reactors.
Source: NUMARC (1989).

Table E.11 Estimated number of workers with organ burdens (in % MPOB[a]) from^{60}Co, 1983-1987[b]

Year	<1%	1-2%	2-3%	>3%
1983	3480	8	1	0
1984	2284	4	1	3

1985	764	2	0	0
1986	772	2	1	1
1987	596	0	0	0

[a]MPOB = maximum permissible organ burden.

[b]Data taken from termination reports for employees of power reactors.

Source: NUMARC (1989).

E.3.2 Public

The radiation dose to people who live in the vicinity of a U.S. NPP averages about 0.8 m rem/year. Pertinent data are provided in the following paragraphs.

Each year, the NRC issues a report titled *Population Dose Commitments Due to Radioactive Releases from Nuclear Power Plant Sites in XXXX*. The most recent volume covers the year 1989 (NUREG/CR-2850, vol. 11, February 1993) (see Table E.12). Radioactive material is released in gaseous and aqueous effluents under stringently controlled conditions in accordance with technical specifications and NRC regulations. The term "dose commitment" indicates that the reported doses come from the inhalation and ingestion of radionuclides, as well as from external radiation from noble gases; the population dose caused by direct radiation from plant buildings is negligible. The doses are calculated by the licensees in accordance with guidance provided by the NRC and based on measurements made at the point of release as well as in the environment. These measurements are performed and recorded by the licensees; however, the NRC conducts its own verification measurements. The prescribed calculation methods include several basic assumptions to ensure that the results are conservative. Table E.13 presents results obtained for a 15-year period ending in 1989. The numerical entries are person-rem received by those who live within an 80-km (50-mile) radius of a site; data for individual sites also appear in this report.

The total population dose within 80 km (50 miles) of each plant is calculated (Table 4 in NUREG/CR 2850, vol. 11) for each operating reactor in the United States. The number of person-rem is obtained by adding the individual doses received by this population. For 1989, the total number of person-rem varied from a low of 0.0017 at Grand Gulf to a high of 16 at McGuire. Seventy-five percent of the total came from 9 of the 67 sites, as shown in Table E.14. In the site summaries section of each report, dose data for each site are provided for airborne and waterborne pathways and are categorized by total body and individual organs. The doses received by workers at the plants and members of the public are shown in Table E.13 for comparison.

Projections into the future can be made on the basis of current trends. Therefore, an analysis of dose commitment information was performed. The first objective was to determine to what extent known information about the sites could be used to predict what the dose commitment values for the sites were for the years 1979-1989. The second objective, if prediction of current dose commitments could be done adequately, was to use the models to predict future dose commitment for U.S. sites by extrapolating into future years the characteristics used in the model and the population projections for the sites. Table E.15 portrays information that was available about U.S. nuclear power reactor sites.

Using these variables, other site characteristics were computed. These include the following:

- Interval from startup to observation (calendar year-year of startup).
- Status. This variable was based on the capacity factor. If the capacity factor was below 25 percent for the year, the site was designated as "down." If the capacity factor was above 25 percent, status was designated as "up" for that year. The cutoff point was chosen based on the observation that sites generally were either substantially below that value or above it by a large margin. Status is a categorical variable representing the level of operation for a given year.

Table E.12 Individual public dose data from power plant effluents, 1988

Individual dose range (mrem)	Percent of total	Cumulative percent

0 to 0.000001	6%	6%
0.000001 to 0.00001	4%	10%
0.00001 to 0.00003	18%	28%
0.00003 to 0.0001	30%	58%
0.0001 to 0.0003	21%	79%
0.0003 to 0.001	13%	92%
0.001 to 0.003	5%	97%
0.003 to 0.01	< 2%	99%
0.01 to 0.03	< 1%	100%

Source: NUREG/CR-2850.

Note: To convert millirem to millisievert, multiply by 0.01.

- Total output, which is the product of total megawatt size and capacity factor and is an estimate of output for a given year. A linear model was fitted to the dose data using combinations of the above variables as independent variables. Clearly, observed doses cannot be negative, and the model predictions also should not be negative. For this reason, the linear model was fit to l*n*(dose). The resulting model was then of the form

Dose = exp (linear function of independent variables) .

The resulting model also provided a considerably improved fit to the data over the linear model, based on the proportion of variability accounted for by the model.

Because population total dose commitment is the sum of the estimated population liquid dose commitment and the population air dose commitment, the liquid and air components were estimated separately, and the sum of the two estimates was used as the model estimate for the total population dose commitment. This proved to produce a better estimate than did a direct fit to the population total dose commitment.

To determine the best fit, various combinations of independent variables were tried based on percentage of total variability accounted for by the model. Not all variables can be included at one time because some are determined by combinations of others. Because all boiling water reactors (BWRs) in this analysis were manufactured by General Electric Co. (GE), it was not

Table E.13 Summary of population and occupational doses (person-rem) for all operating nuclear power plants combined

	Population			
Year	Liquid	Air	Total	Occupational
1975	76	1,300	1,300	20,879
1976	82	390	470	26,107
1977	160	540	700	32,508
1978	110	530	640	31,801
1979	220	1,600	1,800	39,982
1980	120	57	180	53,795
1981	87	63	150	54,144
1982	50	87	140	52,190
1983	95	76	170	56,472
1984	160	120	280	55,235
1985	91	110	200	43,042
1986	71	44	110	42,381

1987	56	22	78	40,401
1988	65	9.6	75	40,769
1989	68	16	84	35,980
1990	--[a]	--	--	35,592
1991	--	--	--	28,515
1992	--	--	--	29,309

[a]Data not available.
Source: NUREG/CR-2850; NUREG-0713.
Note: To convert person-rem to person-sievert, multiply by 0.01.

Table E.14 Highest public dose data from nuclear power plant effluents, 1988

Plant	Population dose (person-rem)	Population within 50 miles (80 km) (persons)	Average individual dose (mrem)
McGuire	16	1,800,000	0.0091
Summer	13	900,000	0.014
Zion	7.2	7,300,000	0.001
E. I. Hatch	6.4	350,000	0.018
Clinton	4	2,700	0.0015
Oconee	3.8	9,900	0.0039
Oyster Creek	2.2	3,600,000	0.0006
Harris	1.8	1,400,000	0.0013
Calvert Cliffs	1.7	2,800	0.00061
All sites	75	150,000,000[a]	0.0005

[a]This figure is inflated because not all sites are 100 miles apart, and some persons within each 50-mile radius were counted more than once.
Source: Adapted from NUREG/CR-2850.
Note: To convert person-rem to person-sievert or millirem to millisievert, multiply by 0.01.

Table E.15 Information on U.S. nuclear power reactor sites that was used to model future trends

Age-time characteristics	Reactor operating characteristics
Year of first startup (first year of operation of any reactor at the site)	Total megawatt capacity by calendar year (sum of capacities of all reactors)
Calendar year (year of observation of dose value)	Capacity factor by calendar year (percentage of total megawatt capacity output in calendar year)
	Site reactor type (boiling water or pressurized water)
	Reactor manufacturer (if more than one, designated mixed). Manufacturers were General Electric Company, Westinghouse, Combustion Engineering, Babcock-Wilcox, and mixed

possible to include both site type [BWR/pressurized water reactor (PWR)] and vendor as independent variables. Including vendors proved to produce a better-fitting model. The independent variables that proved to be most predictive of the l*n*(dose) values included the following:

- calendar year,
- year of startup,
- size in megawatts,
- vendor or manufacturer, and
- status (up or down).

The first three variables are continuous and are included as covariates in the model. The last two are categorical variables and are treated as class variables in the model. Because the manufacturer proved to be an important factor in the relationship of dose to the independent variables, the vendor was taken into account for each reactor in the prediction equations. To do this, estimates of the coefficients (and significance) for the remaining independent variables were made separately for the vendor categories. Because the covariates were estimated *within* the different manufacturer (vendor) categories, differences in the values of the covariates among vendors are not taken into account when vendors are compared. Thus, for example, if sites with GE reactors have larger megawatt capacities than do other reactors, that difference influences the comparisons for the vendors.

Three sites proved to be highly variable in dose commitments and thus tended to unduly influence the linear model fit: Browns Ferry, Nine Mile Point, and Oyster Creek (all of which were GE BWRs). To exclude undue influence of these three sites on the results, the results reported are those for the model fitted to the subset, not including these sites. Three Mile Island (Babcock-Wilcox, PWR) was also excluded because it represented an accident scenario rather than routine releases, and the dose values were substantially larger for certain years than at any other reactor sites.

Tables E.16, E.17, and E.18 give the results of the linear model fitted to l*n*(dose) for liquid, air, and average individual doses, respectively. If a variable (startup year, for example) has a different pattern in the two site types, the *p* value for each site type is given because an overall value is no longer meaningful. The overall model accounts for approximately 42 percent of the variation in the l*n*(air dose) values.

Overall, liquid doses are much less predictable than air doses, as the resulting model fit for the liquid doses indicates. For liquid doses, the best-fitting model accounted for only about 20 percent of the overall variability in the model.

The linear model accounts for 27 percent of the variability in the log of the average individual dose commitment values.

Using the coefficients estimated within the analysis, it is evident that the population dose commitments by site and by calendar year are being systematically lowered. Results of the analysis were used to plot historical data against predicted doses. (See example figures in Attachment E.C.) These figures portray how each reactor has performed with respect to other reactors in its class (i.e., age, size, and vendor). The dominant theme is the decline in population dose commitment, observed nearly universally. However, if the decline in dose to the public suddenly ceased, levels are sufficiently low that they already represent an insignificant insult to humans.

Data on maximally exposed individuals from airborne emissions are also reported semi-annually to the NRC by each nuclear utility.

Table E.16 Linear model for estimation of liquid dose

Parameter	Significance (*Pr* > *T*)	Remarks
Vendor	0.0001	Babcock and Wilcox (B&W) manufactured reactors have significantly higher liquid doses than do reactors made by other manufacturers; General Electric (GE) reactors are next highest. Mixed sites have the lowest liquid doses
Status (by vendor)	0.01 (B&W) 0.10 (CE)[a] 0.05 (GE) 0.06 (mix) 0.21 (Westinghouse)	GE and mixed sites have higher doses from liquid sources when they are down (below 25 percent of theoretical maximum output). Many mixed sites are partly GE reactors. Reactors by all other manufacturers, all of which are PWRs[b], have lower doses when they are operating below 25 percent capacity (classified as down)
Calendar year (by vendor)	0.39	Liquid emissions are not decreasing significantly with time for any of the five types, although the coefficients are negative except for the mixed sites. Thus the general

		trend with time is for air doses to be decreasing considerably, while doses from liquid sources are not decreasing significantly. The decreasing trend in total dose commitment is caused by the lower air dose estimates
Year of startup (by vendor)	0.29 (B&W) 0.80 (CE) 0.0001 (GE) 0.11 (mix) 0.63 (Westinghouse)	Liquid doses are higher in older reactors only for GE reactor sites. For others, there is not a significant trend with reactor age (start year)
Total size, MW (by vendor)	0.57 (B&W) 0.19 (CE) 0.0001 (GE) 0.78 (mix) 0.03 (Westinghouse)	For GE and Westinghouse reactors, the larger sites had higher liquid doses. The increase in liquid dose with megawatt capacity was much higher for GE reactors than for the other types

[a]CE = Combustion Engineering

[b]PWRs = pressurized-water reactors.

Table E.17 Linear model for estimation of air dose[a]

Parameter	Significance (*Pr* > *T*)	Remarks
Vendor	0.0003	Manufacturer with highest air doses is Babcock-Wilcox [but highly variable--next highest is General Electric (GE)]. Lowest is Combustion Engineering (CE)
Status (by vendor)	0.0001	For all reactor types (manufacturers), air doses decrease significantly when the reactor is operating at less than 25 percent capacity. This is not necessarily true for doses from liquid sources
Calendar year (by vendor)	0.005	Air doses are decreasing with calendar year (for 1979-87) for all reactor types. Rate of decrease is fastest for GE reactors. Rate of decrease is much smaller for CE reactors than for others, partly because these are lower to begin with
Year of startup (by vendor)	0.02 (B&W) 0.004 (CE) 0.0001 (GE) 0.13 (mixed) 0.0001 (Westinghouse)	With the exception of CE, all types have higher air doses in older reactors. For CE, newer reactors have higher doses
Total size, MW (by vendor)	0.0001	Larger reactors had higher air doses. This relationship was strong and was a major contributor to the prediction of dose for each reactor site. This held true for all manufacturers but was much less evident in B&W reactors. The increase in air dose with size was largest for GE and Westinghouse reactors

[a]The overall model accounts for approximately 42 percent of the variation in the l*n*(air dose) values.

These data for the period 1985-1987 were compiled in NUMARC (1989). These data are presented in Table E.19. Inspection of this table reveals that the highest organ and thyroid exposures to the maximally exposed individual are on the order of 5 mrem. The exposure level for the typical maximally exposed individual is orders of magnitude less.

The NRC design criteria for NPPs are 5 mrem/year from stack releases plus 3 mrem from aqueous effluents. The EPA annual dose limit (fuel cycle facilities) is 25 mrem. The anticipated new NRC limit from

Table E.18 Linear model for estimation of average individual dose commitment

Parameter	Significance (*Pr* > *T*)	Remarks

Vendor	0.0001	General Electric (GE)-manufactured reactors have significantly higher individual doses than do reactors by other manufacturers.
Status (by vendor)	0.08 (B&W) 0.11 (CE) 0.04 (GE) 0.96 (mix) 0.09 (Westinghouse)	Sites with GE reactors have higher individual doses when they are down. This is presumably because of the higher liquid doses. The doses from other manufacturers' reactors generally decrease, but not significantly.
Calendar year (by vendor)	0.63 (B&W) 0.98 (CE) 0.04 (GE) 0.18 (mix) 0.04 (Westinghouse)	Only significant for GE and Westinghouse reactors, for which individual doses have been decreasing continuously through successive calendar years.
Year of startup (by vendor)	0.94 (B&W) 0.47 (CE) 0.0001 (GE) 0.007 (mix) 0.02 (Westinghouse)	For GE sites, older reactor sites have significantly higher individual dose estimates. For Westinghouse and mixed sites, the newer sites have higher individual dose commitments
Total size, MW (by vendor)	0.0001	Same relationship as for the air doses. Larger sites have higher estimated individual dose commitments because of the air dose component

all sources (other than medical and natural background) is 100 mrem/year. It is evident that these plants are operating far below government requirements with respect to effluent control.

E.4 Risks from Radiation Exposure

[**Prev** | **Next** | **Top of file**]

In January 1990, the National Research Council-NAS published a report on the health effects of exposure to low levels of ionizing radiation (BEIR-V). This report was prepared by a committee on BEIR organized by the council for this purpose and known as the BEIR-V Committee. The BEIR-V report concluded that the risk of radiation exposure was greater than previously estimated. The bases and limitations of these estimates are described in Section E.4.1 of this GEIS.

In light of these data, the ICRP requested comment from a number of organizations on a draft of its revised recommendations on radiation protection (ICRP/60/G-01); on June 22, 1990, the ICRP issued a press release recommending more stringent control over occupational exposures. These developments are very likely to affect the regulation of NPPs in the future but only

Table E.19 Doses (mrem) to the maximally exposed individual from routine airborne emissions[a]

Plant	Unit	Docket	1985		1986		1987	
			Total body	Thyroid	Total body	Thyroid	Total body	Thyroid
Arkansas One	1	50-313	NR[b]	NR	0.0017	0.036	0.0023	0.0070
	2	50-368			0.0060	0.83	0.0044	0.0054
Beaver Valley	1	50-334	NR	NR	0.023	0.092	0.0014	0.0017
	2							
Bellefonte Nuclear Plant	1	--	NR	NR	NR	NR	NR	NR
	2							
Big Rock Point Nuclear Plant	1	--	NR	NR	NR	NR	NR	NR
Braidwood Station	1	--	NR	NR	NR	NR	NR	NR
	2							
Browns Ferry Nuclear Power Station	1	50-296	0.060	NR	NR	NR	NR	NR
	2							
	3							

Brunswick Steam Electric Plant	1	50-324	NR	NR	NR	NR	0.028	0.093
	2							
Byron Station	1	--	NR	NR	NR	NR	NR	NR
	2							
Callaway Plant	1							
Calvert Cliffs Nuclear Power Plant	1	50-317	NR	NR	NR	NR	NR	0.44
	2							
Catawba Nuclear Station	1	50-413	0.88	NR	2.2	NR	0.89	0.67
	2							
Clinton Power Station	1	--	NR	NR	NR	NR	NR	NR
Comanche Peak Steam Electric Station	1	--	NR	NR	NR	NR	NR	NR
	2							
Donald C. Cook Nuclear Power Plant	1	50-315	0.057	1.9	0.020	0.27	0.024	1.3
	2							
Cooper Nuclear Station	1	50-298	0.57	0.60	0.40	0.56	0.018	0.097
Crystal River Nuclear Plant	3	50-302	0.022	0.31	0.21	0.0038	0.20	0.027
Davis-Besse Nuclear Power Station	1	50-346	0.0081	0.056	0.00064	0.00064	0.12	0.040
Diablo Canyon Nuclear Power Plant	1	50-275	NR	0.0014	NR	0.0043	NR	0.0047
	2	50-323	NR	0.0041	NR	0.0035	NR	0.0029
Dresden Nuclear Power Station	2	50-249	NR	NR	NR	NR	NR	NR
	3							
Duane Arnold Energy Center	1	--	NR	NR	NR	NR	NR	NR
Joseph M. Farley Nuclear Plant	1	50-348	0.13	0.18	0.12	0.090	0.081	0.054
	2							
Enrico Fermi Atomic Power Plant	2	--	NR	NR	NR	NR	NR	NR
James A. FitzPatrick Nuclear Power Plant	1	--	NR	NR	NR	NR	NR	NR
Fort Calhoun Station	1	--	NR	NR	NR	NR	NR	NR
Robert Emmett Ginna Nuclear Power Plant	1	--	NR	NR	NR	NR	NR	NR
Grand Gulf Nuclear Station	1	50-416	0.090	NR	0.068	NR	0.34	0.94
Haddam Neck Point (Connecticut Yankee)	1	50-213	1.0	0.14	0.39	0.087	0.66	0.073
Shearon Harris Nuclear Power Plant	1	50-400	NR	NR	NR	NR	0.022	0.022
Edwin I. Hatch Nuclear Plant	1	50-321	0.093	0.00065	0.0040	0.29	0.13	0.26
	2							
Hope Creek Generating Station	1	--	NR	NR	NR	NR	NR	NR
Indian Point Station	2	50-286	0.00078	0.029	0.00049	0.062	NR	NR
	3							
Kewaunee Nuclear Power Plant	1	50-305	NR	NR	0.12	0.013	0.00001	0.022
LaSalle Country Station	1	--	NR	NR	NR	NR	NR	NR
	2							
William B. McGuire Nuclear Station	1	50-369	NR	NR	0.15	NR	0.081	NR
	2							
		50-370	1.8	2.6	NR	0.42	0.0036	NR

Millstone Nuclear Power Plant	1	50-245	0.007	0.0007	0.22	0.0007	0.083	0.0015
	2	50-336	0.015	0.038	0.01	0.043	0.013	0.04
	3	50-423	NR	NR	0.00052	0.1	0.017	0.014
Monticello Nuclear Generating Plant	1	50-263	NR	1.3	NR	1.2	NR	2.6
Nine Mile Point Nuclear Station	1	--	NR	NR	NR	NR	NR	NR
	2							
North Anna Power Station	1	50-338	NR	1.3	NR	0.80	NR	0.44
	2							
Oconee Nuclear Station	1	50-287	0.15	NR	0.087	0.97	NR	NR
	2							
Oyster Creek Generating Station	1	50-219	1.4	8.8	4.3	0.81	0.17	17
Palisades Nuclear Plant	1	50-255	NR	0.10	NR	0.0073	NR	NR
Palo Verde Generating Station	1	--						
	2							
	3							
Peach Bottom Atomic Power Station	2	50-278	0.041	1.2	0.12	0.70	0.015	0.13
	3							
Perry Nuclear Power Station	1		NR	NR	NR	NR	NR	NR
Pilgrim Nuclear Power Station	1	50-293	0.49	0.18	0.027	0.064	NR	NR
Prairie Island Nuclear Generating Plant	1	50-232	NR	NR	NR	NR	NR	NR
	2							
Point Beach Nuclear Plant	1	--	NR	NR	NR	NR	NR	NR
	2							
Quad-Cities Station	1	50-254	0.0020	0.16	NR	NR	0.0025	0.12
	2	50-265	0.0020	0.16	NR	NR	0.0021	0.10
H. B. Robinson Plant	2	50-261	NR	NR	0.016	0.35	0.068	0.11
Salem Nuclear Generating Station	1	50-311	0.016	NR	0.028	NR	0.047	NR
	2							
San Onofre Nuclear Generating Station	1	50-206	NR	0.16	NR	NR	NR	0.014
	2	50-361	NR	0.41	NR	0.14	NR	0.049
	3							
Seabrook Station	1	--	NR	NR	NR	NR	NR	NR
Sequoyah Nuclear Plant	1	50-327	0.19	0.054	0.0020	NR	NR	NR
	2							
Shoreham Nuclear Power Station	1	--	NR	NR	NR	NR	NR	NR
South Texas Project	1	--	NR	NR	NR	NR	NR	NR
	2							
St. Lucie Plant	1	50-335	0.013	4.2	0.011	5.8	0.0023	0.76
	2	50-389	0.0062	2.4	0.0021	0.89	0.0028	1.1
Virgil C. Summer Nuclear Station	1	50-395	NR	NR	0.00051	NR	0.000001	NR
Surry Power Station	1	50-281	NR	NR	NR	0.035	NR	0.36
	2							
Susquehanna Steam Electric Station	1	50-238	0.10	0.14	0.0069	NR	0.011	NR
	2							
Three Mile Island Nuclear Station	1	50-289	NR	NR	0.019	NR	0.0028	NR
Trojan Nuclear Plant	1	50-344	0.069	NR	NR	NR	NR	NR

Turkey Point Plant	3	50-250	NR	NR	0.0038	0.032	0.0087	0.20
	4	50-251	NR	NR	0.0042	0.025	0.0088	0.22
Vermont Yankee Nuclear Power Station	1	50-271	NR	NR	NR	NR	NR	0.42
Watts Bar Nuclear Plant	1 2	--	NR	NR	NR	NR	NR	NR
Washington Nuclear Project	2	50-220	NR	NR	0.013	0.48	0.024	0.73
Wolf Creek Generation Station	1	--	NR	NR	NR	NR	NR	NR
Yankee Nuclear Power Station	1	50-29	NR	NR	NR	NR	NR	NR
Zion Nuclear Plant	1 2	50-295	0.044	0.0078	0.092	0.029	0.00047	NR

[a]Data compiled from semi-annual reports submitted to the Nuclear Regulatory Commission by each nuclear utility. Adapted from NUMARC 1989.
[b]Not recorded in source document.

Note: To convert millirem to millisievert, multiply by 0.01.

after the current Presidential Guidance to Federal Agencies is modified to take them into account. With regard to this GEIS, the primary importance of these developments lies in the selection of the most appropriate radiation risk coefficients to use for evaluating health effects; it is therefore necessary to recount earlier developments.

E.4.1 Background

E.4.1.1 Stochastic Effects

In 1972, NAS had sufficient epidemiological information, primarily from the study of Japanese atomic bomb survivors, to publish (in BEIR-I) a radiation risk estimate that was widely interpreted as 1 cancer fatality among 10,000 people receiving 10,000 person-rem. This estimate was applicable to large populations receiving acute doses instantaneously, such as persons exposed to nuclear-weapon explosions. The validity of such estimates for large or small doses received over a lifetime was (and remains) unknown. With additional information from the atomic bomb survivor study, the NAS in 1980 published (in BEIR-III) a range of radiation-risk estimates that, in general, doubled federal agencies' estimates. It was recognized that the new estimates were derived from instantaneous exposure data and were therefore of limited use in the standards development process. The BEIR-III committee's linear quadric dose-response model for solid cancers did, however, contain an implicit dose rate factor of nearly 2.5.

Subsequently, two developments in the atomic bomb survivor study caused another doubling of the overall risk estimate. First, a reassessment of the radiation doses received by the survivors was completed (National Research Council 1987). This study indicated that any gamma-radiation-induced malignancies at Nagasaki had been caused by less radiation than previously believed. However, the opposite effect was observed among the Hiroshima survivors. The new dose estimates include more structural shielding and also include shielding by tissues overlying the affected organs.

The second development concerned the number of survivors who later died from solid tumors, which was greater than had been anticipated. In the 1980 BEIR-III report, the committee expressed its preference for a risk model that essentially assumed that subsequent excess death rates would be similar to those already observed. However, within a few years, publications issued by the Radiation Effects Research Foundation (RERF) reported a departure from this model, attributable to deaths from solid tumors (RERF TR 12-87). The newer data tend to fit a model that predicts that the excess cancer deaths from atomic-bomb radiation will be a constant percentage increase over the cancer deaths from all other causes. In consideration of these findings, federal agencies began to use a risk estimate of 4 or 5 excess cancer deaths among 10,000 people receiving 10,000 person-rem. For example, the EPA used 4 per 10,000 to arrive at the 10 mrem/year limit promulgated in 40 CFR Part 61 (FR 54, 9612, March 7, 1989). NRC used 5 per 10,000 in the

development of its *Below Regulatory Concern: Policy Statement* (1990). The following statement appears in the executive summary of the BEIR-V report:

On the basis of the available evidence, the population-weighted average lifetime excess risk of death from cancer following an acute dose equivalent to all body organs of 0.1 Sv [0.1 Gy of low--linear energy transfer (LET) radiation] is estimated to be 0.8 percent, although the lifetime risk varies considerably with age at the time of exposure. For low-LET radiation, accumulation of the same dose over weeks or months, however, is expected to reduce the lifetime risk appreciably, possibly by a factor of 2 or more.
The 0.8 percent estimate is equivalent to 800 excess cancer fatalities among 100,000 people, each exposed to 10 rem. It is important to note that the risk values tabulated in the report are for a population size of 100,000 and that the 0.8 percent estimate is applicable to instantaneous, uniform irradiation of all organs. With regard to the lower extreme of the dose range over which the estimate is applicable, the committee observes elsewhere in the BEIR-V report that "In general, the estimates of risk derived in this way for doses of less than 0.1 Gy are too small to be detectable by direct observation in epidemiological studies."

An absorbed dose of 0.1 Gy corresponds to a gamma radiation dose equivalent of 10 rem. It is also important to note that the report does not provide a risk estimate for instantaneous doses of fewer than 10 rem. The committee's estimate is considered useful for estimating fatalities among large populations, including all ages, that are irradiated instantaneously and uniformly to individual external radiation doses of 10 rem or more. Risk assessments based on the Japanese experience are only theoretical under the following conditions:

- exposures are protracted,
- the people are irradiated nonuniformly,
- the exposed population is small,
- individual doses are fewer than 10 rem,
- the irradiation is caused by internally deposited radionuclides,
- the exposed population differs significantly from the atomic bomb survivor study group,
- some combination of these conditions exists, or
- any of an almost infinite list of unknowns applies.

The risk estimate published in the 1990 BEIR-V report is consistent with estimates published earlier by RERF scientists (RERF TR 12-87) and by UNSCEAR (1988). Their estimates, shown in Table E.20, reveal the greater susceptibility of populations that include children, as well as the reduced effects if the radiation doses are low and delivered at low dose rates (i.e., protracted). In the pertinent literature, this phenomenon of reduced effects is usually referred to as the dose rate effectiveness factor (DREF). Risk estimates for instantaneous exposure are divided by the DREF to obtain estimates that can be applied to protracted exposure conditions. Lack of data on humans dictates primary reliance on animal studies for DREF estimates. For the values reported in Table E.20, a DREF of 2.5 was used by the RERF authors. A DREF range of 2 to 10 was used in the UNSCEAR report.

For its new reactor safety study, the NRC has published a DREF of 3 (NUREG/CR-4214). In the 1990 BEIR-V report, a DREF of 2 or more is mentioned for low-LET radiation (gamma) as previously quoted; and a DREF of 4 is given as the "single best estimate" for tumorigenesis identified in laboratory animal studies. The ICRP is considering the use of a DREF of 2 in the forthcoming major revision of its recommendations. The DREF question is critical to risk assessments and to decisions regarding dose limits and ALARA requirements.

Table E.21 shows the progression in the risk estimate values used by federal government agencies following the publication of authoritative reports on the subject, as discussed in the preceding narrative.

Table E.20 RERF[a] and UNSCEAR[b] risk coefficients; excess cancer fatalities

	All ages		Adults	
	RERF	UNSCEAR	RERF	UNSCEAR

High doses and dose rates	12	3-11	8	4-8
Low doses and dose rates	5	0.3-5.5	3	0.4-4

[a]Radiation Effects Research Foundation (RERF) authors used a dose rate effectiveness factor (DREF) of 2.5.

[b]United Nations Scientific Committee on the Effects of Atomic Radiation (UNSCEAR) authors used a DREF range of 2 to 10.

Table E.21 Radiation risk estimates used by federal agencies following publication of the documents shown

Publication	Excess cancer fatalities among 100,000 people receiving instantaneous external radiation doses of 10 rem
1972 BEIR-I report	100
ICRP Publication 26	200
1980 BEIR-III report	200
RERF Publications	400-500
1990 BEIR-V report	800

Note: To convert millirem to millisievert, multiply by 0.01.

Note that the 1980 BEIR-III report used a DREF in the preparation of tabulated risk estimates and that the 1990 BEIR-V report did not. The occupational risk estimates of current interest from both reports are given in Table E.22.

Because 88 percent of the deaths included in the later data from the atomic bomb survivor study are from solid tumors, leukemia is now considered a small contribution to the total risk. It is important to recognize that if a DREF of 2 is used for solid tumors as well as leukemia, the BEIR-V fatality estimate is reduced from 2975 to 1666 excess cancer fatalities among 100,000 adults each receiving 1 rem/year for a working lifetime.

Table E.22 Radiation risk estimates to 100,000 adult workers (50 percent male and 50 percent female) for continuous exposure to 1 rem/year during a working lifetime using the relative risk projection model

	BEIR-III	BEIR-III	BEIR-V
Model	L-Q[a]	L[b]	L-Q; L[c]
Excess fatal cancers	551	2336	2975

[a]Linear-quadratic dose response model.

[b]Linear dose response model (combines leukemia and solid tumor deaths).

[c]Linear-quadratic dose response model for leukemia; linear dose response model for solid tumors.

Note: To convert rem to sievert, multiply by 0.01.

E.4.1.2 Nonstochastic Effects

Nonstochastic effects do not occur unless the radiation dose exceeds a threshold, permitting the use of limiting values that prevent rather than control the probabilities of occurrence of the effects. For parts of the body (organs and tissues) such as the lens of the eye, the skin, and the extremities, radiation protection standards are intended primarily to control the dose from external sources. For the internal organs, it is necessary to control the dose from internally deposited radioactivity as well. Because radiation can damage or kill any living cell if the dose is sufficiently high, a nonstochastic dose limit must also be established for all tissues, including tissues other than those mentioned above. A significant point to consider in connection with an effect that has an accurately known threshold is that the implementation of the ALARA concept to reduce doses to levels below the threshold will not offer additional protection against that effect. However, if the organ or tissue under consideration is also susceptible to radiation-induced cancer, such implementation will reduce that probability. For this reason, the ALARA concept is applicable to the nonstochastic inhalation standards.

ICRP Publication 41 (1983) provides the database supporting the position that, with the exception of the lens of the eye, nonstochastic effects will not be observed among adults if every organ and tissue receives fewer than 50 rem/year. The NRC is not aware of later radiobiological information indicating that this dose limit should be changed and notes that the ICRP has proposed the retention of this value in the forthcoming revision of its recommendations (ICRP/90/G-01).

E.4.2 Risk Coefficient Selection for this Generic Environmental Impact Statement

E.4.2.1 The 1990 BEIR-V and the 1988 UNSCEAR Reports

The BEIR-V risk estimate can be arithmetically converted to the more familiar terminology of 8 cancer fatalities among 10,000 people exposed to 10,000 person-rem, leading to a convenient expression, or risk coefficient, of 8×10^{-4} fatalities per person-rem. This coefficient is considered useful for estimating fatalities among large populations irradiated instantaneously and uniformly to individual external radiation doses of 10 rem or more. However, since no DREF is included in this risk factor, as the individual doses and the size of the exposed population become progressively smaller, the fatality estimates become speculative. As noted in the previous section, a DREF of 2 is considered appropriate for use in the GEIS analysis for license renewal.

An additional source of uncertainty is that many of the exposed people who were included in the atomic bomb survivor study are still alive. The risk estimate is therefore based in part on a projection of future excess cancer deaths that may or may not occur. For making this projection, the BEIR-V committee chose a method (the relative risk projection model) that involves multiplying solid tumor cancer fatality rates within an unexposed U.S. population by a constant percentage increase factor determined for a Japanese population. The number of excess fatalities on which the risk estimates are based is epidemiologically small. Of the 93,669 "in-city" members of the study group, 37,874 (or 40 percent) had died by the end of 1989; 8,422 (or 9 percent) of the deaths were caused by cancer. RERF epidemiologists estimate that 505 (or 0.5 percent) of the cancer deaths are attributable to radiation from the bombs.

The collective dose to a population must become a great deal larger than current doses from NPPs if health effects are to be a concern. In its 1988 report (paragraph 251), UNSCEAR stated:

The product of risk coefficients appropriate for individual risk and the relevant collective dose will give the expected number of cancer deaths in the exposed population, provided that the collective dose is at least of the order of 100 man Sv. If the collective dose is only a few man Sv, the most likely outcome is zero deaths.
A collective dose of 100 man-sievert is equivalent to 10,000 person-rem. In the 1990 BEIR-V report (p. 181), the NAS Committee on BEIR stated:

Moreover, epidemiologic data cannot rigorously exclude the existence of the threshold in the millisievert dose range. Thus the possibility that there may be no risks from exposures comparable to external natural background radiation cannot be ruled out. At such low doses and dose rates, it must be acknowledged that the lower limit on the range of uncertainty in the risk estimates extends to zero.
One millisievert is equivalent to 100 mrem. An important perspective to recognize is that the approximately 140 million people who live within 50 miles of a U.S. NPP receive about 43 million person-rem every year from natural background radiation.

E.4.2.2 Risk Coefficients Selected

The risk coefficients used in this GEIS are listed in Table E.23. These coefficients are consistent with the risk factors repeated in BEIR-V if a DREF of 2 is applied to 88 percent of the cancer fatality risk (i.e., to solid tumors) and are the same as those recently published by the ICRP in connection with a revision of its recommendations (ICRP/60/G-01).

The somewhat higher public risk coefficients reflect the fact that individuals under age 18 at the time of exposure are more susceptible to radiation-induced cancer. To receive occupational radiation exposure, a person must be 18 years or older. Excess hereditary effects are listed separately because radiation-induced effects of this type have not been

observed in any human population, as opposed to excess malignancies that have been identified among people receiving instantaneous and near-uniform exposures of 10 rem or more. Considering the range of uncertainty, the lower limit of the range is assumed to be zero because there may be biological mechanisms that can repair damage caused by radiation at low doses and/or dose rates.

E.5 Overview and Perspective

[**Prev** | **Next** | **Top of file**]

E.5.1 Program Costs

The data presented in Section E.2 of this document provide convincing evidence that the U.S. nuclear power industry is conducting a highly successful radiation protection program. The recent annual average doses are about 0.3 rem for workers (5-rem/year regulatory limit) and about 1 m rem for members of the general public (25-mrem/year regulatory limit) who live within 50 miles of a NPP. This performance leaves reason to believe that the planned refurbishment operations and operation under license renewal can and will be conducted in a radiologically safe manner.

Actual industrial costs for achieving this record have not been made available and may not be known. A comprehensive analysis of programmatic effectiveness would have to include the costs, in particular the cost in dollars per person-rem averted. These values could then be compared with the criterion of $1000 per person-rem used in Appendix I, 10 CFR Part 50, and with the

Table E.23 Nominal probability coefficients used in this generic environmental impact statement[a]

Health effect	Occupational	Public
Fatal cancer	4	5
Hereditary	0.6	1

[a]Estimated number of excess effects among 10,000 people receiving 10,000 person-rem. Coefficients are based on "central" or "best" estimates. To convert person-rem to person-sievert, multiply by 0.01.
Source: ICRP-60.

considerably lower criteria used in Europe. Considering the distribution of radiation protection resources between workers and the public, this type of analysis would provide a basis for prioritization.

E.5.2 Risks

The costs of radiation protection are recovered by the nuclear utilities through charges for electric power. Ideally, radiation-protection costs would be commensurate with the risk averted. However, even if the costs were accurately known, it would not be possible to determine whether actual risks were being averted. The radiation risk data base does not provide the answers, creating a dependence on hypotheses and assumptions. This problem is becoming more serious as the costs become larger and resources are demanded for other public health concerns. Because of the higher individual doses, the technical justification that can be offered for worker-protection costs is stronger than that for public protection. However, studies of exposed workers within recommended limits have not actually verified the existence of a low-level radiation risk.

The most definitive study to date of the possibility of occupational radiation-induced health effects among workers conducting Department of Energy operations has recently been published (Gilbert et al. 1989). This study included almost 36,000 workers at the Hanford site, at Oak Ridge National Laboratory, and at the Rocky Flats Weapons Plant. About 8 percent of the workers had lifetime doses exceeding 10 rem. There was no evidence of a correlation between radiation exposure and mortality when examining all cancers combined or when examining leukemia. When examining other specific cancers, the only one found to exhibit a statistically significant correlation with radiation exposure was multiple myeloma. Twelve deaths occurred from this disease at the Hanford site; none at the other two locations. The researchers report that it is not clear whether the Hanford correlation results from a cause and effect relationship. Only three of the deaths occurred among workers receiving more than 5 rem. There is a 50/50 chance of observing all three

deaths in the same population. Overall, Gilbert et al. found that cancer fatalities occurred less often among the more significantly exposed workers: "The relationship of cancer mortality and radiation exposure was in the negative direction in all three populations." When a suspected carcinogen is examined in an epidemiological study, a correlation in the positive direction (progressively higher disease incidence among the more highly exposed groups) is usually followed by the study of individual cases. A statistically significant correlation in the negative direction is often interpreted to mean that such case studies are unnecessary. It may be important to note that the negative direction finding has been replicated in studies that have been reported of people (including children) who live in areas of abnormally high natural background radiation. Despite these findings, the NRC is operating under a policy of caution. It is recognized that not all of the workers in the Gilbert study have died yet, and people in the high-background studies tend to live in areas where the average life span is relatively short. It is possible that many of them do not live long enough to develop cancer that could otherwise be induced by natural background radiation. For this and other reasons, the NRC has strengthened its occupational radiation protection program by clearly stating, in the new 10 CFR Part 20, the role of the ALARA process within the radiation protection program of each NPP.

Several workers in the nuclear power industry have lifetime doses exceeding 10 rem; however, in a very large majority of these cases, the dose was accumulated over a period of many years. In the Japanese atomic bomb survivor studies, statistically significant increases in cancers have been detected only for the situation in which large populations were irradiated instantaneously and uniformly to external radiation doses of 10 rem or more. The dose rate effect for humans is not well understood, creating a dependence on animal data and molecular and cellular studies. Repair mechanisms have been demonstrated and are being studied. It may eventually be possible to identify a dose rate below which human health effects either do not occur or have a probability of occurrence that is sufficiently small to be of no concern. Until that happens, it would be wise to maintain the present interest in occupational ALARA programs.

E.5.3 Standards

E.5.3.1 Occupational

The new 10 CFR Part 20 contains a codified requirement on the ALARA process, which is in keeping with current trends in radiation risk information. Greater emphasis would not necessarily mean greater costs, particularly if cost-beneficial source-term reduction methods are adopted.

If, in the future, the NRC decides to lower the dose limit from 5 to 2 rem/year, this limit will ensure a lower lifetime risk for a few of the most highly exposed individuals. If some provision for operational flexibility were made, a 2 rem/year limit should not be disruptive or needlessly costly, particularly if dose reduction were achieved through cost-effective and cost-beneficial measures.

The impact on plant refurbishment plans should be preparatory in nature (i.e., planning should take full advantage of reasonable dose-reduction opportunities).

E.5.3.2 Public

The current and limiting standards of 40 CFR Part 190 are not expected to be changed for some time, but it does appear likely that 40 CFR Part 61 will be finalized and will lower the annual total body dose limit for members of the public from 25 to 10 mrem/year for airborne radionuclides. Doses from NPPs are so low that this change in the limit is not expected to have an effect.

E.5.4 Conclusions

With respect to the radiological health aspects of extending NPP licenses, under normal operating conditions, it is evident that the radiation protection programs currently in place are adequate in the case of worker protection and more than adequate for protection of the general public. Experience following the Three Mile Island accident indicates that refurbishment operations can temporarily increase occupational doses. Experience has also shown that the judicious implementation of the ALARA concept can minimize such increases at low cost.

Although radiation doses are a tangible measure for evaluating the license-extension question, the major issue comprises two intangibles: the existence of risk from these doses and the probability that health effects will actually occur. The existence of risk has not been verified for protracted low-level radiation. Under the assumption that the risks are without threshold and real, the probability of risk expression becomes the key issue. But until more is known about dose rate effectiveness, continued caution is indicated for lifetime occupational doses.

E.6 References

[**Prev** | **Next** | **Top of file**]

BEIR-I, *The Effects on Populations of Exposure to Low Levels of Ionizing Radiations*, National Research Council, Advisory Committee on the Biological Effects of Ionizing Radiation, National Academy of Sciences, Washington, D.C., 1972.

BEIR-III, *The Effects on Populations of Exposure to Low Levels of Ionizing Radiation: 1980*, National Research Council, Advisory Committee on the Biological Effects of Ionizing Radiation, National Academy of Sciences, Washington, D.C., 1980.

BEIR-V, *Health Effects of Exposure to Low Levels of Ionizing Radiation*, National Research Council, Advisory Committee on the Biological Effects of Ionizing Radiation, National Academy of Sciences, Washington, D.C., 1990.

Gilbert, E. S., et al., "Analyses of Combined Mortality Data on Workers at the Hanford Site, Oak Ridge National Laboratory, and Rocky Flats Nuclear Weapons Plant," *Radiation Research*, **120**, 19-35, 1989.

ICRP Publication 26, "Recommendations of the International Commission on Radiological Protection," *Annals of the ICRP* **1**(3), International Commission on Radiological Protection, Pergamon Press, New York, 1977.

ICRP Publication 27, "Problems Involved in Developing an Index of Harm," *Annals of the ICRP*, **1**(4), International Commission on Radiological Protection, Pergamon Press, New York, 1977.

ICRP Publication 37, *Cost-Benefit Analysis in the Optimization of Radiation Protection*, International Commission on Radiological Protection, Pergamon Press, New York, 1983.

ICRP Publication 41, *Nonstochastic Effects of Ionizing Radiation*, **14**(3), International Commission on Radiological Protection, Pergamon Press, New York, 1983.

ICRP (International Commission on Radiological Protection), "Report of ICRP Committee II on Permissible Dose for Internal Radiation (1959)," *Health Physics*, **3**, 1960.

ICRP (International Commission on Radiological Protection), "Statement from the 1985 Paris Meeting of the ICRP," *Health Physics*, **48**, 828, 1985.

ICRP (International Commission on Radiological Protection), *Recommendations of the Commission*, ICRP Publication 60, Pergamon Press, New York, 1991.

NBS (National Bureau of Standards), *Permissible Dose from External Radiation: Recommendations of the National Committee on Radiation Protection*, National Bureau of Standards Handbook 59, 1954.

National Research Council, *An Assessment of the New Dosimetry for A-Bomb Survivors*, Advisory Committee on the Radiation Effects Research Foundation, National Academy of Sciences, Washington, D.C., 1987.

NCRP (National Council on Radiation Protection and Measurements), *Influence of Dose and Its Distribution in Time on Dose-Response Relationships for Low-LET Radiations*, Report No. 64, Bethesda, Maryland, 1980.

NCRP (National Council on Radiation Protection and Measurements), *Recommendations on Limits for Exposure to Ionizing Radiation*, Report No. 91, Bethesda, Maryland, 1987.

NRC (U.S. Nuclear Regulatory Commission), *Below Regulatory Concern: Policy Statement*, available in the NRC Public Document Room, Washington, D.C., July 3, 1990.

NRC Regulatory Guide 8.8, Rev. 3, *Information Relevant to Ensuring That Occupational Radiation Exposures at Nuclear Power Stations Will Be As Low As Reasonably Achievable*, U.S. Nuclear Regulatory Commission, 1978.

NRC Regulatory Guide 8.10, Rev. 1R, *Operating Philosophy for Maintaining Occupational Radiation Exposures As Low As Reasonably Achievable*, U.S. Nuclear Regulatory Commission, 1977.

NUMARC (Nuclear Management and Resources Council), *Study of Generic Environmental Issues Related to License Renewal*, Washington, D.C., 1989.

NUREG-0713, *Occupational Radiation Exposure at Commercial Nuclear Power Reactors and Other Facilities, 1992*, Vol. 11, U.S. Nuclear Regulatory Commission, 1993.

NUREG/CP-0101, *Workshop on Rules for Exemption from Regulatory Control*, U.S. Nuclear Regulatory Commission, 1989.

NUREG/CR-2850, D. A. Baker, *Population Dose Commitments Due to Radioactive Releases from Nuclear Power Plant Sites in 1989*, U.S. Nuclear Regulatory Commission, 1993.

NUREG/CR-4214, S. Abrahamson et al., *Health Effects Models for Nuclear Power Plant Accident Consequence Analysis; Low LET Radiation; Scientific Bases for Health Effects Models*, U.S. Nuclear Regulatory Commission, 1989.

Radiological Protection Bulletin, No. 111, *A Summary of the Draft Recommendations of the ICRP, 1990*, National Radiological Protection Board, 1990.RERF TR 12-87, *Comparison of Risk Coefficients for Site-Specific Cancer Mortality Based on the DS86 and T65R Shielded Kerma and Organ Doses*,

Radiation Effects Research Foundation, Life Span Study Report 11, Pt. 1, 1987.

SECY-89-184, *Proposed Commission Policy Statement on Exemptions from Regulatory Control*, U.S. Nuclear Regulatory Commission, available in the NRC Public Document Room, 1989.

UNSCEAR (United Nations Scientific Committee on the Effects of Atomic Radiation), *Sources, Effects and Risk of Ionizing Radiation: 1988 Report to the General Assembly, Forty-third Session*, Supplement No. 45 (A/43/45), United Nations, New York, 1988.

Attachment E.A: Concepts, Terminology, Quantities, and Units Used in the Old and New Versions of 10 CFR Part 20

[**Prev** | **Next** | **Top of file**]

10 CFR Part 20 was first promulgated in 1957. In 1961, the regulation was amended to add an appendix containing maximum permissible concentrations (MPCs) and a new dose limit structure for whole-body exposure to external radiation (1.25 rem/quarter, or 3 rem/quarter with 5 rem/year average as a limit on the cumulative dose). The most recent revision went into effect in 1991. The 1961-1991 version is often called "the old Part 20"; the 1991 version, "the new Part 20." The new version differs considerably from the old, particularly with respect to basic concepts,

terminology, radiation dose quantities, and the associated dose units. This attachment is included for those who need to become familiar with important details that underlie the coming changes in federal regulations.

E.A.1 Conventional Quantities and Units

E.A.1.1 Old Part 20 Quantities and Units

In the old Part 20, the unit "rad" is usually used for the quantity "radiation absorbed dose" whenever early biological effects are the concern. When latent effects (e.g., cancer and genetic effects) are being considered, the unit "rem" is used for the dose equivalent (DE) quantity. The absorbed dose in rads is multiplied by an overall efficiency factor *Q* to obtain the DE in rem. Each type of radiation has its own value of *Q*, which in a very rough way makes absorbed doses from different radiations additive for latent effects. Values of *Q* in the old Part 20 are indicated in Table E.A.1.

These values of *Q* reflect the overall efficiency of a given type of radiation in causing latent effects and are not used for early effects such as acute radiation syndrome. In the old Part 20, these *Q* values are also applied to protection of the eye lens from cataracts and protection of the skin from cosmetic effects. The values were derived in consideration of the ability of the various radiations to ionize atoms in water as well as the relative biological effectiveness factors (RBEs) observed for specific effects. Most of the dose limits given in the old Part 20 are DE, and the rem unit is used.

The DE was used to calculate the MPCs in the old rule. The MPC is defined as the concentration of a radionuclide in air that, if the hypothetical standard man were exposed to it for a working lifetime of 50 years, would cause an annual DE to the critical (most highly exposed) organ after 50 years of exposure. Values are shown in Table E.A.2. The quantity of a radionuclide maintained continuously in an organ that will cause the DE is referred to as the maximum permissible organ burden (MPOB).

The old Part 20 allows the worker to receive external radiation at the rate of 5 rem/year average plus a DE to each organ, as shown in Table E.A.2. This regulation also ignores the internal radiation risk from the DE to noncritical organs and ignores the DE received by an organ from nuclides located in other organs.

Table E.A.1 Efficiency for different radiation types

Radiation	Absorbed dose (rads)	Q	Dose equivalent (rem)
250-kVp X-rays	1	1	1
Gamma	1	1	1
Beta	1	1	1
Beta (< 0.03 MeV max)	1	1.7	1.7
Alpha	1	10	10
Neutron (spectrum unknown)	1	10	10

Note: To convert rem to sievert, multiply by 0.01.

Table E.A.2 Annual dose equivalent limits used for calculating the maximum permissible concentrations

Organ	*r* (rem)
Thyroid	30
Bone	30
Gonads	5
Marrow	5
All others	15

Note: To convert rem to sievert, multiply by 0.01.

E.A.1.2 Collective Dose

The old Part 20 makes no use of the collective dose equivalent (person-rem). However, this quantity is used extensively by the Nuclear Regulatory Commission (NRC) in risk analyses and in its decision-making processes. The collective DE may be obtained as the sum of all individual doses or as the product of the average individual dose and the number of people exposed. The linear-nonthreshold hypothesis is accepted by the NRC for purposes of standards setting. Such acceptance means that standards based on the hypothesis, coupled with the as-low-as-reasonably-achievable concept, are believed to provide an adequate degree of protection.

E.A.2 New Part 20 Quantities and Units

All of the quantities and units discussed above remain in use in the new Part 20; the only change is that the "penetrating dose equivalent" is now called the "deep dose equivalent." However, NRC licensees must become familiar with several additional International Commission on Radiological Protection (ICRP) concepts and quantities.

The ICRP system is based on the recognition of two basic types of radiation-induced health effects: stochastic and nonstochastic. The stochastic (cancer and hereditary) effects are considered to be probabilistic in nature, and the objective is to control the probability to acceptable levels. For stochastic effects, the severity is not dose dependent (i.e., once caused, a malignancy from 100 rem is no worse than one from 50 rem). In contrast, nonstochastic effects are not caused at all unless a threshold dose is exceeded. The objective is to prevent nonstochastic effects, for which severity is dose dependent; for example, a radiation-induced cataract caused by 400 rem will impair vision more than one caused by 300 rem.

E.A.2.1 Nonstochastic Effects

In ICRP Publication 41, technical justification is presented for the ICRP position that, with the exception of cataracts in the lens of the eye, nonstochastic effects will not occur among humans if the DE from external and internal radiation combined, to every organ and tissue, is limited to 50 rem or fewer in a year. To achieve compliance, it is necessary during a given year to ensure that the organ or tissue receiving the highest DE does not exceed this limit.

E.A.2.2 Stochastic Effects

For these effects, the ICRP in 1977 adopted the risk then associated with 5 rem in a year, delivered to every organ, as the basis for its dose-limitation system. Therefore, the stochastic annual limit on intake (ALI) for each radionuclide is the quantity that, if inhaled, would cause the same stochastic risk as a uniform, whole-body dose of 5 rem delivered by external sources in 1 year. To establish these ALIs, the ICRP considered the possibility that a given nuclide taken into the body eventually reaches the bloodstream and is then distributed selectively to the various organs and tissues, where DEs are delivered over a time course determined by the retention capabilities of the organ or tissue and the physical characteristics of the nuclide. Using a radiation risk coefficient specific for each organ or tissue and the 50-year integrated DE for each of these, the risk associated with each is estimated. The total fatality risk to the worker per microcurie of this nuclide inhaled is the sum of the individual organ or tissue risks. The intake that will produce the same overall stochastic risk as 5 rem of uniform external radiation can then be readily calculated as the ALI. Of course, the worker may be exposed to several airborne nuclides and to external radiation as well. When this happens, the total risk is still limited to that associated with 5 rem in a year from uniform external radiation. Compliance is achieved if the fraction of the external dose limit that is received, added to the fraction(s) of the ALI(s) inhaled, does not exceed unity.

The risk of hereditary effects is included in a special way that, in the view of the ICRP, renders it additive to the cancer fatality risk. The ICRP considered only detrimental effects that the worker is likely to experience personally, so that effects manifested after the second generation are not included in the genetic risk coefficient used. The coefficient is also limited to very serious genetic effects (i.e., those comparable in severity to premature death).

E.A.2.3 Weighting Factors

Although all organs and tissues receive the same DE under uniform exposure conditions, the cancer risks often are not the same. Each organ or tissue contributes its own fraction of the risk. This fraction is called the weighting factor; the sum of all of the weighting factors is unity. The product of the weighting factor and the DE is the effective dose equivalent (EDE). This quantity is used for both external and internal irradiation and may be used for individual organs and tissues or for the sum of all organs and tissues. The unit used for either quantity is the same as for the DE, namely, the rem (or sievert). In the unique case of uniform irradiation of all organs and tissues, the sum of their EDEs is by definition equal to the whole-body DE. The EDE may be determined irrespective of the degree of uniformity among the organ or tissue doses. The sum of the EDEs is not allowed to exceed 5 rem in a year. The committed dose equivalent (CDE) is a familiar quantity defined as the 50-year integrated DE to a specific organ or tissue following the inhalation of a radionuclide. This quantity is still used, but only in connection with nonstochastic effects. The committed effective dose equivalent (CEDE) is the same quantity as the CDE, with the exception that, in the case of the CEDE, each DE is multiplied by a weighting factor. The rem (or sievert) is also the unit for both of these quantities.

The mathematical weighting method used by the ICRP is shown in Table E.A.3. The first column lists the organs, and the second column lists the risk coefficients from ICRP-26 and their sum; namely, 1.65×10^{-4}. This sum is the total annual risk to the exposed person, assuming exposure to these organs at 1 rad/year. [Multiplication by 5 gives the annual risk at 5 rads/year (i.e., 8.25×10^{-4} per year). This risk value means that if groups of 10,000 workers were to receive the dose limit every year for their entire careers, data as of the mid-1970s indicate that an average of 8.25 fatal occupational radiation-induced cancers per year would occur within each group. Assuming the approximate worst case of 45 years of exposure, the toll theoretically would be about 370 deaths per group, or almost 4 percent.] The fraction of this risk per rad for each organ can be obtained by dividing its risk coefficient by 1.65×10^{-4}. These fractions represent the relative sensitivity of the organs; they are the weighting factors and are designated by the symbol w_T, where T represents the organ or tissue. The weighting factors appear in column three of the table. If T is the DE to tissue T, then $w_T H_T$ is the weighted dose equivalent. For example, w_T for the lung is 0.12. If a weighted lung dose of H rem is set equal to a highly penetrating, uniform whole-body dose of 5 rem,

$0.12\ H = 5$ rem and
$H = 41.7$ rem ;

by hypothesis and analogy, an annual DE of 41.7 rem to only the lung would have the same effect as 5 rem to all of the organs combined. For this reason, $w_T H_T$ is called the EDE.

Nonstochastic effects have thresholds, and they become more severe as the dose gets larger. ICRP believes that none of the thresholds will be exceeded if the annual dose does not exceed 50 rad. This nonstochastic limit is reflected in column five of the table, where it is evident that

Table E.A.3 International Commission on Radiological Protection-26 risk weighting system

Organs	Risk coefficients (effects per organ-rem)	Weighting factors	Organ dose equivalent (DE) causing same risk as 5 rem to whole body (rem)	Annual DE permitted, exposure of one organ (rem/year)
Gonads	4×10^{-5}	0.25	20	20
Breasts	2.5×10^{-5}	0.15	33-1/3	33-1/3
Lung	2×10^{-5}	0.12	41-2/3	41-2/3
Red marrow	2×10^{-5}	0.12	41-2/3	41-2/3
Bone	5×10^{-6}	0.03	166-2/3	50
Thyroid	5×10^{-6}	0.03	166-2/3	50
1st RO[a]	1×10^{-5}	0.06	83-1/3	50
2nd RO	1×10^{-5}	0.06	83-1/3	50

3rd RO	1×10^{-5}	0.06	83-1/3	50
4th RO	1×10^{-5}	0.06	83-1/3	50
5th RO	1×10^{-5}	0.06	83-1/3	50
Totals	1.65×10^{-4}	1.0		

[a]The remainder organs (ROs) are the five organs that receive, from a given radionuclide, the highest effective dose equivalent, integrated over 50 years.
Note: To convert rem to sievert, multiply by 0.01.

nonstochastic effects are controlling for all but four organs that have the largest weighting factors--the most sensitive organs with respect to highly serious effects.

E.A.3 International System of Units

The International System (SI) units of particular interest to health physicists are the gray, sievert, and becquerel, shown in Table E.A.4. The SI units are part of the metric system; however, they are not yet widely used in the United States. The new Part 20 prohibits their use in records required by the NRC. The major concern of the NRC staff is that use of both the conventional and SI units would introduce confusion under emergency conditions.

Table E.A.4 Conventional and International System (SI) units

Quantity	Conventional unit	SI unit	SI unit equivalent
Absorbed dose	Rad (100 ergs/gram)	Gray (10,000 ergs/gram)	100 rad
Dose equivalent	Rem (Q x rad)	Sievert (Q x gray)	100 rem
Activity	Curie (3.7×10^{10} d/s)[a]	Becquerel (1 d/s)[a]	3×10^{-11} Ci

[a] Disintegration per second.

Attachment E.B: The ICRP Dose Limitation System

[**Prev** | **Next** | **Top of file**]

In International Commission on Radiological Protection (ICRP) Publication 26, a three-tiered system of dose limitation, was introduced--justification, optimization, and limitation. This system was adopted for occupational radiation protection in the 1987 Presidential guidance to federal agencies. Revised Presidential guidance for protection of the public is in preparation.

E.B.1 Justification

The first tier, justification, is an admonition that governments should take radiation risks into full consideration before adopting programs that would involve the exposure of personnel to radiation or radioactive material. An example of such a programmatic consideration would be a decision to construct and operate nuclear electric power plants. Another example, on a much smaller scale, would be a decision to permit the use of jewelry containing small amounts of radioactivity induced by neutron irradiation.

E.B.2 Optimization

In ICRP Publications 26 and 37, the phrase as low as reasonably achievable (ALARA) was discontinued (for ICRP purposes) in favor of the term "optimization." The ICRP considers the terms to be synonymous but apparently feels that "optimization" is more descriptive of the intent of its recommendation. In the United States, ALARA has traditionally been a concept used to justify radiation protection measures that further reduce doses already within regulatory limits.

The probabilistic nature of stochastic radiation effects supports continuation of the application of the concept to the point at which the probabilities become too small to be of concern.

In the case of public protection, the Environmental Protection Agency (EPA) (40 CFR Part 190) and the Nuclear Regulatory Commission (NRC) (10 CFR Part 50) have established ALARA limits that are enforced rather than the considerably larger limits recommended by the ICRP and the National Council on Radiation Protection and Measurements (NCRP). The ALARA limits were derived using analytic techniques to identify approximately the point at which the cost of providing additional protection would exceed the risk averted. A more qualitative approach has been taken in the implementation of the occupational ALARA concept--no ALARA limits have been set. The basic dose limits have been coupled with the avoidance of unnecessary exposure. Soon after the ICRP introduced optimization in 1977, a more aggressive approach was initiated. Operators began to identify dose-reduction measures that were cost effective or even cost beneficial. Annual average doses among occupational groups are now characteristically below 10 percent of the limits. It is evident that actual doses to workers or the public are controlled by the ALARA concept rather than by dose limits, and that is why the ICRP lists optimization as the second tier of its system.

ICRP optimization is an analytical method through which the financial costs of dose reduction are compared with those of radiation-induced health effects to find the point at which the total costs of both are minimized (i.e., optimized). ICRP optimization takes only radiation risks into account.

E.B.3 Limitation

The third tier is limitation (i.e., the establishment and enforcement of dose limits for workers and the public). Compliance with a dose limit normally involves the measurement or calculation and recording of radiation doses to individuals to demonstrate that the doses did not exceed any limit established by cognizant government authorities. Because the primary risks of radiation are proportional to the lifetime accumulated dose, it is considered to be safe in the case of workers to allow a relatively large dose infrequently as long as the dose is compensated for in previous or subsequent years by commensurately smaller doses. This situation permits operational flexibility without sacrificing control of the lifetime risk. The ICRP and NCRP have therefore recommended dose limits for workers that are not to be approached routinely, but infrequently, if at all, as special operational needs arise.

Attachment E.C: Plots of Population Dose Commitments by Reactor Legend:

[**Prev** | **Next** | **Top of file**]

D Predicted total dose commitment (model)

* Air Dose Commitment (Data)

o Liquid Dose Commitment (Data)

◊ Total Dose Commitment (Data)

Figure E.C.1 Person-rem per year for Arkansas One.

Figure E.C.2 Person-rem per year for Beaver Valley.

Figure E.C.3 Person-rem per year for Big Rock Point.

Figure E.C.4 Person-rem per year for Calvert

Appendix F: Methodology for Assessing Impacts to Aquatic Ecology and Water Resources

F.1 List of Issues

[**Prev** | **Next** | **Top of file**]

The nonradiological aquatic effects of continuing operations during a license renewal period are not unique to nuclear power plants but instead are typical of potential impacts from any large steam-electric power plant (whatever the fuel type) and operation of the associated condenser cooling systems. The aquatic resources issues listed in Table F.1 have been identified from literature reviews, reviews of environmental impact statements (EISs), and professional contacts.

All of the issues listed in Table F.1 are addressed in Chapters 3 and 4, but primary emphasis is on the areas of water use, intake effects (entrainment and impingement), and thermal and chemical discharges. These areas consistently have been the most common issues raised in power plant impact assessments and permitting actions, and they have been the subject of considerable study and postoperational monitoring.

F.2 Sources of Information

[**Prev** | **Next** | **Top of file**]

Information about historical and ongoing aquatic impacts associated with nuclear power plants was obtained from three general sources: (1) contacts with state and federal resource and regulatory agencies, (2) a survey of utilities that operate nuclear power plants, and (3) published literature.

Agencies with responsibility either for regulating the construction and operation of protection and maintenance of aquatic resources in the vicinity of the power plants were contacted for this document. For example, the U.S. Environmental Protection Agency (EPA) is responsible for protecting the quality of waters receiving discharges from the power plants and regulating the operation of the condenser cooling water intake and discharges. Regulation of intake and discharge effects to prevent significant impacts to aquatic communities is carried out by issuance and periodic renewal of National Pollutant Discharge Elimination System (NPDES) permits and, if necessary, by Clean Water Act Section 316(a) and (b) determinations (see Section 4.2 for a discussion of these regulatory requirements). Most often these permitting responsibilities have been delegated to the water quality regulatory agencies of the individual states. Although the state fish and wildlife agencies, the U.S. Fish and Wildlife Service (FWS), and the National Marine Fisheries Service (NMFS) do not issue permits to the nuclear power plants, they are concerned about the protection and enhancement of aquatic resources and thus have an essential consulting role with the U.S. Nuclear Regulatory Commission (NRC). Resource agency concerns may range from maintenance or enhancement of sport and commercial fisheries to protection of threatened and endangered species to restoration of anadromous fish or aquatic habitats.

Information request letters were sent to 151 individuals representing 74 state regulatory and resource agencies and to representatives in all of the regions of EPA, FWS, and NMFS. The letters solicited agency input

Table F.1 Aquatic resources issues associated with the refurbishment and operation of nuclear power plants

Refurbishment

- Soil erosion and sedimentation
- Water quality degradation from spilled chemicals

Operation

Water quality, hydrology, and use issues

- Water use conflicts
- Effects of consumptive water use on riparian communities
- Altered current patterns at intake and discharge structures
- Altered salinity gradients
- Temperature effects on sediment transport capacity
- Altered thermal stratification of lakes
- Scouring caused by discharged cooling water
- Eutrophication
- Discharge of chlorine or other biocides
- Discharge of other chemical contaminants (e.g., metals)
- Discharge of sanitary wastes

Aquatic ecology issues

- Threatened or endangered species
- Impingement of large organisms on the intake screens
- Entrainment of organisms into the condenser cooling water system
- Heat shock
- Cold shock
- Effects on movements and distribution of aquatic organisms
- Premature emergence of aquatic insects
- Stimulation of nuisance organisms (e.g., shipworms)
- Increased losses caused by predation, parasitism, and disease among organisms exposed to sublethal stresses
- Gas supersaturation (gas bubble disease)
- Low dissolved oxygen in the discharge
- Accumulation of contaminants (e.g., chlorinated organic materials or metals) in sediments or biota

about any existing or potential problems associated with operation of nuclear power plants in their state or region and any issues to be treated in thelicense renewal effort. An example information request letter is shown in Figure F.1. Responses were received from 17 federal agency regions and 55 state agencies, some of which provided references to specific studies that had been conducted to assess power plant impacts. These responses were used to augment information available from other sources on power plant effects.

A survey of all electric utilities that operate nuclear power plants was developed by Oak Ridge National Laboratory (ORNL) staff and administered by the Nuclear Management and Resources Council (NUMARC). The survey was intended to obtain the utilities' overview of the impacts of their power plants on aquatic resources. The survey contained nine questions related to aquatic resources; these are listed in Table F.2. As with the agency information requests, the utility responses to the survey were used as another source of information for assessment of power plant effects on aquatic resources.

For further information on aquatic impacts of power plant operations, published literature was reviewed, including peer -reviewed scientific journal articles that resulted from impacts studies, as well as periodic and topical reports submitted to or prepared by agencies [e.g., NRC EISs for the construction permit and operating license, environmental monitoring reports to the NRC, periodic reports to agencies associated with NPDES permits, and Section 316(a) and (b) demonstrations].

F.3 Analytical Approach

[**Prev** | **Next** | **Top of file**]

Analysis of impacts to aquatic resources focused on effects of power plant operation on water quality, water use, and aquatic biota. The potential impacts to these resources stem mainly from operation of the cooling water systems, although possible effects of refurbishment during the license renewal period were also examined.

Potential impacts to aquatic resources during the license renewal period result primarily from operation of the condenser cooling system. Water quality and availability can be altered by (1) use of biocides to prevent condenser tube fouling; (2) loss of water through evaporation, especially from cooling towers; (3) discharge of salts, metals, and other chemical contaminants; and (4) discharge of heated effluents. Aquatic biota can be affected by entrainment, impingement, and water quality changes from discharge of heated effluents and chemical contaminants. All of these effects were considered by the NRC in the EISs associated with the construction permit and operating license; they continue to be evaluated by the EPA or the state water quality permitting agency as part of the issuance and periodic renewal of the NPDES permit.

The approach used to assess effects of license renewal of existing nuclear power plants was to obtain information relating to these aquatic resources issues from monitoring data, other published information, and utility and regulatory agency contacts. If no impacts have been demonstrated for a given issue during the initial operating period of any plant, then continued operation under similar circumstances during the relicense period would not be expected to result in significant impacts. If impacts have been demonstrated

Figure F.1 Example information request letter sent to state fish and wildlife resource agencies, state water pollution control agencies, and regions of the U.S. Fish and Wildlife Service, National Marine Fisheries Service, and U.S. Environmental Protection Agency.

Table F.2 Questions relating to nuclear power plant impacts on aquatic resources that were part of the electric utility survey

Post-licensing modifications or changes in operations of intake or discharge systems may have altered the effects of the power plant on aquatic resources or may have been made specifically to mitigate impacts not anticipated in the design of the plant. Describe any such modifications or operational changes to the condenser cooling water intake and discharge systems since the issuance of the operating license
Summarize and describe (or provide documentation of) any known impacts to aquatic resources (e.g., fish kills, violations of discharge permit conditions) or National Pollutant Discharge Elimination System (NPDES) enforcement actions that have occurred since issuance of the operating license. How have these been resolved or changed over time? The response to this item should indicate whether impacts are ongoing or were the result of start-up problems that were subsequently resolved
Changes to the NPDES permit during operation of the plant could indicate whether water quality parameters were determined to have no significant impacts (and were dropped from monitoring requirements) or were subsequently raised as a water quality issue. Provide a brief summary of changes (and when they occurred) to the NPDES permit for the plant since issuance of the operating license
An examination of time trends in the results of aquatic resources monitoring can indicate whether impacts have increased, decreased, or remained relatively stable during operation. Describe and summarize (or provide documentation of) results of monitoring of water quality and aquatic biota (e.g., related to NPDES permits, environmental technical specifications, site-specific monitoring required by federal or state agencies). What trends are apparent over time?
Summarize types and numbers (or provide documentation) of organisms entrained and impinged by the condenser cooling water system since issuance of the operating license. Describe any seasonal patterns associated with entrainment and impingement. How have entrainment and impingement changed over time?
Aquatic habitat enhancement or restoration efforts (e.g., anadromous fish runs) during operation may have enhanced the biological communities in the vicinity of the plant and increased its impacts beyond that originally anticipated. Alternatively, degradation of habitat or water quality may have resulted in loss of biological resources near the site. Describe any changes to aquatic habitats (both enhancement and degradation) in the vicinity of the power plant since the issuance of the operating license that may have resulted in different plant impacts from those initially predicted

Plant operations may have had positive, negative, or no impacts on the use of aquatic resources by others. Harvest by commercial or recreational fishermen may be constrained by plant operation or may be relatively large compared with fish losses caused by the plant. Describe (or provide documentation for) other nearby uses of waters affected by cooling water systems (e.g., swimming, boating, annual harvest by commercial and recreational fisheries) and how these have changed since issuance of the operating license
Describe other sources of impacts to aquatic resources (e.g., industrial discharges, other power plants, agricultural runoff) that could contribute to cumulative impacts. What are the relative contributions by percentage of these sources, including the contributions due to the power plant, to overall water quality degradation and losses of aquatic biota?
Provide a copy of your Section 316(a) and (b) Demonstration Report required by the Clean Water Act. What 316(a) and (b) determinations have been made by the regulatory authorities?
at some plants, then the analysis attempted to define the source and extent of the problem, to examine efforts to mitigate the problem, and to determine whether these site-specific impacts represent potential issues for the entire industry. The conclusions of this analysis were used to make judgments about limiting or eliminating the treatment of particular issuesin the license renewal applications of particular types of plants.

Because this Generic Environmental Impact Statement (GEIS) is intended to consider potential impacts across the industry and is not a site-specific license renewal action, the corresponding information required for the analysis is different. The objective is not to evaluate in detail the effects of each nuclear power plant on aquatic ecosystems but rather to examine information available from a variety of sources from a large sampling of plants with a view toward defining common, industry-wide issues that may need to be addressed in (or can be eliminated from) future license renewal actions. The assessments of aquatic resources issues in this GEIS are necessarily less detailed than the full analyses typically performed at the initial licensing stage. In such full analyses, the applicant supplied an environmental report containing detailed results of sampling programs, with appropriate analyses. The NRC staff reviewed this material, usually obtaining clarification and further information, and visited the site and discussed the information in detail as part of their independent analyses of the costs and benefits of the proposed action.

The possible endpoints of the evaluation of aquatic ecological effects in this GEIS are also constrained, regardless of the amount of information available from operation during the initial license period. Power plant impacts cannot be measured simply by comparing preoperational data with postoperational data. To accurately evaluate the impact of a power plant, one needs to know what the environment would have been like if the power plant had not been built (NUREG-CONF-002). This is not generally possible for aquatic systems. Reservoirs change as they age (in productivity and potentially in species composition). Even in rivers or estuaries, standing crops of fish change from year to year, or even from decade to decade. These systems' responses to changes in environmental, biological, and anthropogenic factors are poorly understood. Power plants superimpose their effects on a mosaic of background influences from water flow rates, temporal pattern of runoff, temperature, productivity of other trophic levels, competition and predation, chemical pollution, habitat modification, fishing pressure, and other factors. However, the acceptability of power plant effects must be periodically reconsidered in the renewal of NPDES permits. The judgment that a facility employs "best available technology" or ensures a "balanced, indigenous population of shellfish, fish and wildlife" connotes that such effects, although real, are acceptable.

Because the nuclear power plants considered in this GEIS are now operating, some kinds of local (near-field, short-term) impacts (e.g., on benthic organisms) can be measured from localized studies at the intake and discharge. Mainly of interest, however, are the system-level (ultimate, long-term, population-level) effects, particularly on fish and shellfish. Models and professional judgment have been used to extrapolate the local power plant impacts to the resulting long-term, far-field effects on the whole system (Section F.4). Comparisons can also be made with sites not directly affected. Because of the interfering effect of other factors, however, such comparisons do not represent the actual system-level effects attributable solely to a power plant.

It is possible to measure the behavior of aquatic systems affected by operating nuclear power plants through time. Usually, a limited amount of data is collected before power plant operation. If the effects of the plant were drastic enough, an obvious change coinciding with operation could be detected when preoperational data were compared with postoperational data. Combined with information about near-field plant impacts, the change could be attributed to the

plant. With less drastic plant impact, monitoring might show maintenance of a balanced and indigenous aquatic community. This does not always mean that the plant is without impact but could indicate that we are unable to detect a change from preoperational conditions (whether in spite of, because of, or regardless of the effects of the plant). However, it is reasonable to conclude that system-level effects are not evident, and whatever effects the plant is having are acceptable.

When the amount of preoperational data available is small, our confidence that the plant's impact is not serious is greatly reduced (Van Winkle et al. 1981). Uncertainties also arise when changes in the system occur that may be caused primarily by natural or anthropogenic factors (e.g., fish restoration projects or changes in fishing regulations).

The main purpose of our assessments is to identify aquatic ecology issues that generally do not need to be considered in the license renewal process as opposed to those that may or do need to be considered. By examining evidence for system-level effects (e.g., from entrainment and impingement) based largely on operational information, we can determine whether there is clear evidence for effects or whether the importance of these effects is still uncertain and may need to be resolved before license renewal. In this latter case, we cannot dismiss the issue for all plants, but its potential importance for many plants would be greatly lessened.

F.4 Plant-Specific Analysis

[**Prev** | **Next** | **Top of file**]

In addition to the review of all aquatic resources issues, selected issues were examined in greater detail for a subset of power plants. These issues, entrainment and impingement of fish and the effects of thermal discharges on aquatic biota, were the most common concerns expressed by the agencies. Because of factors such as large cooling water withdrawal and discharge rates, high D -Ts (large increases in temperature between intake and discharge) (Table 2.3), unique characteristics of the water body, or concerns expressed by the resources agencies, the power plants selected for detailed evaluation are believed to represent the types of power plants with the greatest potential for intake and discharge effects. These examples also represent a variety of aquatic systems affected by nuclear power plant operations, including reservoirs [Arkansas Nuclear One (ANO) and William B. McGuire Nuclear Station], the Great Lakes (D. C. Cook Nuclear Power Plant and the cumulative effects of Lake Michigan nuclear power plants), large rivers (cumulative effects of Hudson River power plants), and marine systems [San Onofre Nuclear Generating Station (SONGS) and the Crystal River Nuclear Plant]. Although some power plants with once-through cooling systems operate in relative isolation from other obvious sources of man-induced stress to aquatic biota, most of the examples considered here may affect aquatic resources in conjunction with other nuclear and coal-fired power plants, and therefore may represent the most severe cases. Where appropriate, the cumulative effects of these combined sources of stress have also been discussed.

F.4.1 Arkansas Nuclear One

The ANO station is a 2-unit, 1762-MW(e) plant located in Pope County, Arkansas, on Lake Dardanelle, an impoundment of the Arkansas River completed in the 1960s. Unit 1 uses a once-through cooling system, whereas Unit 2 has a natural-draft cooling tower system. Intake water is withdrawn from the Illinois Bayou arm of Lake Dardanelle through a 981-m (3220-ft) canal. The discharge is through a 158-m (520-ft) canal to an embayment of Lake Dardanelle. The D -T at full load is 8.3° C (15° F) for Unit 1. Because of the small volumes of blowdown associated with the closed-cycle cooling system of Unit 2, its contribution to discharge temperature increases is negligible. Arkansas Power and Light (AP&L) has conducted an extensive environmental monitoring program relating to the effects of ANO on Lake Dardanelle, including the effects of heated water discharges, impingement, and entrainment.

ANO has operated under a series of NPDES permits issued by EPA; no Section 316(a) demonstration has been required. Utility consultations with EPA Region 6 in the early 1980s confirmed that there was no 316(b) requirement; reevaluation would be needed only if there were a dramatic change in impact [AP&L, response to NUMARC survey (NUMARC)]. The following sections discuss the impacts of ANO operation.

F.4.1.1 Thermal Discharges

A portion of AP&L's monitoring program is designed to assess the impacts of the thermal discharge on fish and aquatic life (AP&L 1984). Discharge temperature is limited to 35° C (95° F), with a maximum increase over ambient of 2.8° C (5° F) based on a monthly average of daily depth-averaged values measured at unspecified locations in Lake Dardanelle (Geo-Marine, Inc. 1976; AP&L 1984). Most of the heat added to the water is dissipated within 2.5 km (1.6 miles) of the point of discharge (Rickett 1983).

The plant discharge has been studied with respect to effects on physicochemical parameters, phytoplankton, zooplankton, and fish. Statistically significant differences in turbidity, suspended solids, chloride, and hardness, but not conductivity, were found between the intake area and an upstream area in Lake Dardanelle, but not between the intake and the discharge (Rickett and Watson 1985). The differences appear to be small and may be the result of characteristically different water quality in the Illinois Bayou and the Arkansas River mainstream (e.g., Geo-Marine, Inc. 1976). A comparison of the phytoplankton communities at close versus distant sampling stations after power plant operation began showed (1) no noticeable effects on phytoplankton abundance and the number of taxa and (2) no significant effects on diversity (Rickett and Watson 1983b), although an indication is given that phytoplankton were stimulated at close stations (Rickett and Watson 1983a). The heated effluent was considered to have slightly suppressed overall abundance and variety, but not diversity, of the zooplankton community, and to have generally increased the ratio of phytoplankton to zooplankton abundance at close stations (Rickett and Watson 1983a). Also attributed to the power plant was a dominance exchange between the rotifer genera *Brachionus* and *Polyarthra*, with the latter genus moving from third to first rank in terms of the number of times it was dominant at individual sampling stations (both close and distant). Such a shift is consistent with experimental results showing an increase in abundance of *Polyarthra major* in a heated enclosure relative to an unheated control (CONF-740820).

Evaluating effects of the discharge on fish communities is one of the main objectives of multiyear fish surveys conducted by AP&L. Fish are attracted to the discharge area in the winter and to the intake area in the summer; sport fish tend to avoid the discharge area in the summer because of the elevated temperatures [AP&L, response to NUMARC survey (NUMARC)]. Concern was expressed in the Final Environmental Statement (FES) for Unit 1 (AEC Docket 50-313) about potential cold shock in the event of rapid plant shutdown during the winter. Recent information [AP&L, response to NUMARC survey (NUMARC 1990)] does not discuss whether such shutdowns have occurred, but only one significant fish kill incident (excluding entrainment and impingement mortality) is reported from 1974 through 1989. The deaths, in the discharge area, were related to lordosis (humpback or crooked spine). This abnormality may have been caused primarily by toxaphene, an agricultural pesticide that washed into the reservoir from the surrounding watershed and was enhanced by the thermal discharge. Toxaphene was banned, and lordosis has rarely been observed after 1978 [AP&L, response to NUMARC survey (NUMARC 1990)].

Time trends in mean weights of adult fish have been examined over several years (Tilley 1983). Mean weights for five species of fish tended to be somewhat higher in the discharge embayment than in stations elsewhere, as did the ratio of predators to prey based on weights. It was concluded that species composition in the reservoir had not reached equilibrium in the 15 years after impoundment, and it was considered unlikely to do so in the future. The species composition in the vicinity of the discharge is, however, not significantly different from that in other sample areas (Tilley 1983).

F.4.1.2 Entrainment and Impingement

The potential for entrainment at ANO is not negligible. At full power operation, the plant withdraws 48 m^3/s (765,000 gal/min) of water. If the reservoir is viewed as a closed system, this is 0.5 percent of the reservoir volume per day. Viewing the reservoir as an open system, the intake is 5 percent of the mean flow through the reservoir; much larger percentages can be calculated during periods of low flow. Although these percentages do not represent estimates of entrainment or impingement, they may be large enough to result in significant impacts.

An assessment of entrainment at ANO has been conducted by AP&L (1990). Summary data are presented for 1977-1982 for fish larvae from meter net samples in the Illinois Bayou in the vicinity of the entrance to the intake canal and in the intake canal itself. Clupeid larvae represented 79-97 percent of all larvae captured in the entrainment samples, depending on the year. Although clupeids were the most frequently entrained larvae, these species have been able to reestablish themselves in the intake area and the reservoir each year. AP&L does not regard entrainment at ANO as having a significant impact on these or other species of fish in the lake (AP&L 1990).

Impingement samples have been taken from at least 1974 through 1982. Impingement has been substantial. In the FES for Unit 2, NRC staff reported that from June 10, 1974, through July 19, 1975, 34 species had been impinged at Unit 1; estimated impingement was 27.5 million fish weighing 213,000 kg (470,000 lb), of which 99.6 percent by number and 99.3 percent by weight were threadfin or gizzard shad (NUREG-0254). These fish were predominantly young-of-year and presumably stressed by low water temperatures (Zweiacker et al. 1977). Ten million fish weighing 97,900 kg (215,900 lb) were impinged during the first year of operation, compared with an average impingement of 2 million fish weighing 13,000 to 30,000 kg (29,000 to 66,000 lb) in ensuing years [AP&L, response to NUMARC survey (NUMARC 1990)]. Also during 1974-1975, an air bubble curtain was evaluated as a possible means of reducing impingement. It was considered ineffective. Impingement levels were found to be inversely correlated with temperature (Zweiacker et al. 1977).

An indication of the magnitude of ongoing impingement can be obtained by comparing estimated impingement of fish with estimated reservoir standing crops. These estimates were provided for 1981 for some of the more important commercial and sport fish and forage fish in the reservoir. Impingement in 1981 represented less than 3 percent of the estimated gizzard shad population and less than 13 percent of the estimated threadfin shad population, either by numbers or by weight. For the 11 other species, the fraction was 1 percent or less and usually less than 0.1 percent. Impingement rates of the magnitude estimated for threadfin shad could have a significant effect on the population, although demonstrating (i.e., measuring) the effect would probably be impossible given the limited preoperational data and the natural variability inherent in fish populations (Van Winkle et al. 1981). Loar et al. (1978) studied impingement of threadfin shad at 32 southeastern power plants, including ANO. The impingement rate of shad [number impinged per million cubic meters (2.6×10^8 gal) of water withdrawn] at ANO was more than 4 times that of the second highest plant in their study and more than 10 times higher than rates at the other nuclear power plants. Loar et al. concluded that the characteristic of peak winter impingement of threadfin shad was widespread for southeastern U.S. power plants between 33° and 37° N latitude (ANO is near 35° N latitude) and that impingement rates were higher in reservoirs than on rivers. They could not firmly relate the rates to type of intake structure or to plant operational parameters (e.g., flow rates; velocity near the intake screens).

F.4.1.3 Summary of Impacts

Information about preoperational (1969-72) and postoperational (1975-84, except for 1979) standing crops of fish from Lake Dardanelle are available in one of the National Reservoir Research Data Bases. Four multivariate analyses of variance, or MANOVAs, of the Lake Dardanelle data were conducted. These compared preoperational status of fish communities in the reservoir with postoperational status based on standing crops for selected important commercial, sport, or forage species within four groups of fish: clupeids (threadfin shad, gizzard shad, and skipjack herring); catfishes (channel catfish, flathead catfish, and blue catfish); basses (largemouth bass, striped bass, and white bass); and crappies and sunfishes (black crappie, white crappie, bluegill, and longear sunfish). A significant ($p < 0.05$) difference was found only with the basses. The individual univariate analyses of variance, or ANOVAs, for individual bass species showed a significant decrease in largemouth bass. However, a nonparametric test using the Mann-Whitney U statistic showed, in addition, a significant increase in striped bass (which had not been caught at all in the preoperational period). Whether these changes are related primarily to operation of ANO, to natural changes in Dardanelle Reservoir as it ages, or to other anthropogenic factors is not clear. Because entrainment and impingement of largemouth bass are low, substantial effects of ANO on this species would only be expected as an indirect consequence of effects on one of their food sources, clupeids; such effects on clupeids were not detected.

The combined effects of thermal discharges and entrainment and impingement stresses are likely greatest on the threadfin and gizzard shad populations. Quantifying the level of stress would require extensive additional analyses, far beyond the scope of this GEIS. Evaluating the consequences of these effects and stresses at the fish population level presents additional difficulties, due in large part to uncertainty about biological compensatory mechanisms (EPRI EA-5200s). However, as AP&L points out, threadfin and gizzard shad are able to reestablish themselves in the intake area and the reservoir each year [AP&L, response to NUMARC survey (NUMARC 1990)]. Effects of changes in zooplankton dominance and high annual levels of shad impingement are not apparent. In addition, state and federal regulatory agencies have not expressed concern about operation of ANO.

F.4.2 William B. McGuire Nuclear Station

The William B. McGuire Nuclear Station is a 2-unit, 2360-MW(e) plant located on Lake Norman, the largest impoundment in North Carolina. Both units use a once-through cooling system, drawing a combination of surface water from a manmade embayment and deep water from an intake located near the base of Cowan's Ford Dam. The near-shore discharge is channeled through a canal 1 km (0.6 mile) long. The D -T (change in temperature) at full load ranges from 8.6° C (15.5° F) in the summer to 13.7° C (24.7° F) in the winter (Duke Power Company 1985).

Concerns about McGuire's impacts to aquatic resources have focused mainly on effects of heated water discharges on recreational fisheries (DUKE PWR/82-02), although entrainment and impingement are also of potential concern for aquatic life. Water use has also been identified as an issue.

Lake Norman was impounded in 1963 primarily for power generation. The Marshall Steam Station (coal-fired) also uses the lake for cooling water; with both facilities operating, the lake has the highest thermal loading from the discharge of once-through condenser cooling water of any lake of comparable size in the United States (DUKE PWR/82-02). Several sport fish species have been successfully introduced to the reservoir. Largemouth bass, crappie, striped bass, and white bass dominated the fishery in the early 1980s (DUKE PWR/82-02).

The following sections discuss the major potential sources of impacts from the McGuire plant.

F.4.2.1 Thermal Discharges

Extensive attention has been devoted to evaluating the thermal effects on Lake Norman of discharges from both Marshall and McGuire. Postoperational versus preoperational comparisons of fish standing crops based on cove rotenone sampling show fluctuations, but the only documented trend is a decline in gizzard shad standing stocks near the discharge since operation [Duke Power Company, response to NUMARC survey (NUMARC 1990)]. Minor sporadic die-offs of striped bass and yellow perch have been observed before and after operation of McGuire. These have been attributed to a loss of oxygenated cool-water habitat. The original NPDES permit for McGuire specified a maximum discharge temperature of 35° C (95° F). A new permit, issued in 1990, increases this limit to 37° C (99° F) during July to September. The new higher limit can be attained with a lower proportion of cool, deep (hypolimnetic) water from the lower-level intake structure. This in turn is expected to reduce the depletion of habitat for cool-water fish species (primarily adult striped bass and yellow perch).

Avoidance of the discharge area by fish during summer, which varies depending on the level of operation, has been documented and will probably increase with the new thermal limit. Because areas of Lake Norman water affected by thermal discharges will be increased only by approximately 1 percent as a result of the changed limits (Duke Power Company 1988), the loss of summer aquatic habitat should have negligible effects on fish populations. Attraction of fish to the discharge area during cooler months has occurred in the past and will probably continue. The likelihood of mortalities due to cold shock is substantially reduced with two units operating. No incidences have been reported of fish mortalities resulting from thermal shock in the first few years of operation (Carter 1990).

Gas bubble disease (GBD), which sometimes leads to mortality, has regularly been observed in the discharge of the Marshall plant (McInerny 1990). Duke Power (1985) projected only low incidences of GBD for the McGuire station, based on operating data from Marshall and the D -Ts expected for McGuire. In the limited postoperational data

provided, the incidence of GBD was low. Incidence of disease and parasitism was also low, both in preoperational and operational years (Duke Power Company 1985).

F.4.2.2 Entrainment and Impingement

The only report currently available about entrainment and impingement is from a preoperational, predictive study (Duke Power Company 1978). Threadfin shad were expected to be the fish species most subject to both entrainment and impingement. A formal 316(b) demonstration has not been required at McGuire, and no extensive studies of fish entrainment and impingement have been conducted (Carter 1990).

F.4.2.3 Cumulative Impacts

Combined effects of the Marshall and McGuire plants on fisheries are difficult to document. This difficulty is typical of situations where not only power plants but also other external factors are operating on the system. Despite the potential for entrainment, impingement, and thermal effects, the overall fish populations of Lake Norman appear to be healthy and to support an increasing amount of recreational activity. In responses from federal and state agencies, the North Carolina Wildlife Resources Commission expressed a concern about mortalities of large striped bass in Lake Norman but also indicated that it was uncertain whether these are related to operation of McGuire (Hamilton 1990).

Consideration of impacts to aquatic resources in Lake Norman is an ongoing cooperative effort between Duke Power Company and the resource and regulatory agencies (Lewis 1990). This is evidenced by the recent modification of maximum discharge temperatures of the McGuire station to protect cool-water fish habitat.

F.4.3 D. C. Cook Nuclear Power Plant

The D. C. Cook Nuclear Power Plant is a 2-unit, 2130-MW(e) plant located on the southeastern shore of Lake Michigan. The plant uses a once-through cooling system for both units, drawing water from three intake cribs located 680 m (2231 ft) offshore in 7.3 m (24 ft) of water (Thurber and Jude 1984). Cooling water is also discharged offshore through two slot-jet discharge structures located 366 m (1200 ft) offshore in 5.5 m (18 ft) of water. The maximum temperature to which discharged water is heated above ambient temperatures (i.e., the D -T) is variously reported as 10° C (18° F) (Evans et al. 1977; Evans 1984; Chang and Rossman 1985) or 21° C (38° F) (Thurber and Jude 1984). A riprap bed of crushed limestone was deposited around the intake and discharge structures during construction to prevent erosion and scour.

Concerns about D. C. Cook impacts to aquatic resources have focused on effects of entrainment, impingement, and heated water discharges on recreational and commercial fisheries. The most frequently impinged and entrained fish species in Lake Michigan are alewife, yellow perch, and rainbow smelt (Jensen et al. 1982). All three species support small commercial fisheries, and yellow perch and rainbow smelt are also important to sport fishermen. In addition, there are important cold-water sport fishes (e.g., lake trout and various other stocked salmonids) that could be affected by thermal discharges.

Chang and Rossman (1985) report that the plant no longer requires biofouling control and that chlorination did not occur during their study period. The spread of the fouling organisms *Corbicula* and the zebra mussel in the Great Lakes in recent years may once again require the use of some type of biocide. In any case, D. C. Cook would be unlikely to cause biocide impacts because it discharges treated water through a diffuser (to ensure rapid mixing and dilution) into a large body of water. Chemical effluents would be rapidly diluted and are unlikely to accumulate in the system.

F.4.3.1 Thermal Discharges

The rapid mixing of heated water and discharge into a large body of cold water is unlikely to result in significant adverse impacts. Evans studied benthic communities in the vicinity of the discharge structure and found few or no differences between the thermal plume and control areas in abundances of bottom-dwelling organisms; the few

differences that were detected were limited to small areas within a few hundred meters of the intake and discharge structures.

Spigarelli et al. (1983) studied movements of a cold-water sport fish, the brown trout, near the thermal plume of a Lake Michigan power plant similar to D. C. Cook [essentially the same discharge rate and D -T (change in temperature)]. The trout took up residence in the thermal plume instead of avoiding it, especially during the winter months when ambient temperatures are lower than those preferred by the fish. In Lake Michigan, fish can easily avoid thermal plumes, but some species (brown trout, rainbow trout, alewife, carp, and salmon) frequently occupy these gradients (Spigarelli et al. 1983).

F.4.3.2 Entrainment and Impingement

Because of the large volumes of water withdrawn for condenser cooling of the two units and the large numbers of important fishes in the vicinity, D. C. Cook has been studied for entrainment and impingement impacts. Studies before and during operation of the plant sought changes that could be attributed to operation. Few significant effects were detected from the entrainment of phytoplankton (Chang and Rossman 1985) or zooplankton (Evans et al. 1977), and even these effects were considered inconsequential or highly localized.

Madenjian et al. (1986) used two statistical procedures to assess D. C. Cook impacts. They compared catches of alewives and yellow perch before operation (1973-74) and during operation (1975-82). Both analyses disclosed no significant power plant impacts. State and federal resource agencies contacted for this document did not express concerns about the continuing operation of D. C. Cook (Madenjian et al. 1986).

F.4.4 Lake Michigan Nuclear Power Plants

Six nuclear generating stations are located on Lake Michigan. Except for the Palisades Nuclear Plant, they all use once-through cooling. Listed with the number of units, they are Big Rock Point Nuclear Plant (1), D. C. Cook Nuclear Power Plant (2), Kewaunee Nuclear Power Plant (1), Palisades Nuclear Plant (1), Point Beach Nuclear Plant (2), and Zion Nuclear Plant (2). The near-field aquatic effects of one of these, the D. C. Cook plant, have been considered separately in this section. In addition, EPA, the Illinois Environmental Protection Agency, and the Illinois Department of Conservation all specifically identified entrainment and impingement of fish at the Zion Nuclear Plant as issues of concern; and studies of potential mitigative measures have been requested. In terms of the far-field, long-term effects, it is appropriate to consider these plants as a group and to examine their cumulative impacts, considering also other sources of impact (including fossil-fuel power plants) on Lake Michigan as a whole. This approach has been taken in several publications that consider the cumulative effects of entrainment and impingement of fish.

Kelso and Milburn (1979) evaluated cumulative entrainment and impingement during 1975 or 1976 at 89 power plants using once-through cooling systems located on all five of the Great Lakes. The combined capacity of these plants was 54,118 MW(e). Consideration was also given to an additional 17 plants with once-through cooling systems not yet operational at that time but expected to be operational by 1982, with 30,705 MW(e) additional capacity. Of these, 25 existing and 3 planned plants, with 14,932 and 4,969 MW(e) capacities, respectively, were located on Lake Michigan.

Impingement information was available from 43 percent of the existing power plants. Impingement in Lake Michigan was second highest (after Lake Ontario), with a broad peak from May to July. Entrainment information was more limited, available from only 24 percent of the plants. Regression equations were developed for annual impingement and annual entrainment as functions of power plant size (apparently, with all units combined within plants); these were used to extrapolate to plants lacking adequate data. Based on these equations, annual impingement at existing Lake Michigan plants was estimated to be about 15.4 million fish; the proposed plants were projected to increase this by 755,000 fish. The corresponding estimates for entrainment of larvae were about 196 million and 10 million, respectively.

Kelso and Milburn (1979) estimated annual impingement in the Great Lakes by these power plants of approximately 100 million fish. Calculating an average weight of an impinged fish at about 75 g (2.6 oz), they estimated that the "harvest" by power plants through impingement was at least 7500 metric tons (8300 tons), or 15 percent of the total commercial landings (about 50,000 metric tons (55,000 tons), obtained from references dated 1970 and before). Because they considered their impingement figures to be low, they estimated that impingement losses were in excess of 25 percent of the total annual commercial fish harvest. Kelso and Milburn (1979) estimated an annual entrainment in the Great Lakes of about 1.2 billion larval fish, but because of inadequate information they did not try to relate these losses to the size of the commercial catch.

Scott-Wasilk et al. (1981) believed that Kelso and Milburn's (1979) comparison of the loss estimates with commercial catch data overstated the impact. They noted that 85 percent of the impingement and entrainment was of "ecologically less desirable, but very abundant species" that are increasingly dominant in the commercial catch. Alewife and smelt stocks fluctuate substantially but have shown no consistent trends in abundance in Lake Michigan, despite the entrainment and impingement and a steadily increasing commercial catch of alewives. They considered standing crops to be a more appropriate basis for comparison. Viewed this way for Lakes Michigan and Ontario and the western basin of Lake Erie, annual impingement losses (expressed variously as numbers or as weights) typically constituted less than 1 percent of total stocks. Scott-Wasilk et al. (1981) also felt that the probable effect of power plants on sport and commercial landings was negligible and that (biological) compensatory reserves for impacted stocks, although unquantified, were probably sufficient to minimize the impact of these losses.

Kelso and Milburn (1981), in their response, noted that although losses of alewife and smelt may be small in Lake Michigan, such losses might constitute a significant reduction in the forage base for trout and salmon. The concern was also expressed that discrete stocks and local populations might be depleted by clustering power plants with once-through cooling systems in areas including the southern basin of Lake Michigan.

A different approach, involving the adaptation and use of conventional fishery stock assessment models, was taken by Jensen et al. (1982) to estimate the effects of 15 power plants on Lake Michigan. All of the nuclear plants except Big Rock Point were included. Both the surplus-production and the dynamic- pool models were applied to estimate the proportions of the Lake Michigan standing stocks of alewife, yellow perch, and rainbow smelt impinged and the proportions of eggs and larvae entrained.

The impingement proportions should be reasonably comparable to those calculated by Scott-Wasilk et al. (1981) for 17 Lake Michigan power plants. Although all of the impingement estimates calculated in either paper for Lake Michigan were less than 1 percent, the estimates of Jensen et al. (1982) for alewife (0.25 percent and 0.21 percent, depending on the model used) were substantially smaller than the 0.77 percent estimated by Scott-Wasilk et al. (1981). Conversely, the Jensen et al. (1982) estimates for rainbow smelt of 0.15 percent (both models) were more than double the Scott-Wasilk et al. estimates.

Referring to the type of analysis conducted by Kelso and Milburn (1979), Jensen et al. (1982) also presented estimates of biomass impinged as a percentage of 1975 commercial catch statistics. They estimated that impingement amounted to 10 percent of the commercial catch of alewife, 3.6 percent that of yellow perch, and 3.1 percent that of rainbow smelt which, given the recent predominance of alewife in the commercial catches, compare reasonably well with Kelso and Milburn's (1979) calculation of 15 percent of total commercial landings (all species), based on older catch data.

The main advantage of the approach taken by Jensen et al. (1982) is that, rather than just ratios, the *effects* of entrainment and impingement can be estimated on standing stocks and on maximum sustainable yields. Using the full-flow scenario, but including entrainment and impingement, they estimated reductions of standing crops (biomass) of 2.86 percent for alewife, 0.28 percent for yellow perch, and 0.76 percent for rainbow smelt. Corresponding reductions in the maximum sustainable fishery yield are larger: 4 percent for alewife, 0.5 percent for yellow perch, and 1.2 percent for rainbow smelt. Using "maximum" entrainment and impingement coefficients, there is about a 10 percent decrease in biomass (species not specified). They concluded, "Although large numbers of alewife, rainbow smelt, and yellow perch are killed by entrainment and impingement, the proportions of the populations affected are relatively small. Still,

the loss of fish biomass is not negligible, and entrainment and impingement impacts need to be considered in the design of new intake facilities" (Jensen et al. 1982).

The main lesson to be learned from these analyses of entrainment and impingement impacts on fisheries in Lake Michigan is that it may not be sufficient to evaluate the significance of these types of impacts one power plant at a time. The main effects of concern are not local but relate to the entire lake (or at least to entire basins). The issue is one of resource management, and the logical level for management is at the level of the resource: cumulative impacts of all plants (and other water uses) in an area or on a lake.

F.4.5 Hudson River Power Plants

Seven power stations (including two nuclear stations, Indian Point 2 and 3), with a total net rated capacity of 5798 MW (e), are located along the Hudson River estuary between river kilometers 8 and 228 (Hutchison 1988). The most extensive consideration of entrainment and impingement impacts on the aquatic environment ever undertaken centered on these facilities. During the late 1970s, the studies, analyses, and hearings involved four federal agencies, five utilities, and numerous other parties and drew on the cumulative efforts of nearly 2000 technical personnel. The results of these studies have recently been integrated and summarized as a case study (Barnthouse et al. 1988b) that is the best available evaluation of what can and what cannot be determined about these kinds of impacts.

The greatest attention focused on the population-level effects of entrainment and impingement of fish at the three largest plants: the Indian Point Nuclear Generating Station (Units 2 and 3) and the Bowline Point and Roseton fossil-fuel plants. In particular, the final EPA hearing that ended with the 1980 settlement agreement (Barnthouse et al. 1988a) focused on whether reducing entrainment and impingement effects by retrofitting closed-cycle cooling systems to the six active units at these three facilities was necessary. However, most of the later analyses included the effects of five power plants by adding Lovett and Danskammer, two smaller fossil-fuel stations. The other two plants were near each end of the estuary beyond the region for which data were available but also outside of the main spawning and nursery areas of key fish species. Therefore, analyses assessed the cumulative impact of steam-electric power generation on the Hudson River estuary. Impacts on striped bass received greatest attention, but white perch, Atlantic tomcod, American shad, alewife, blueback herring, and bay anchovy were also considered.

Numerous mathematical models have been developed to evaluate the extent and effects of entrainment and impingement (Christensen and Englert 1988; Barnthouse and Van Winkle 1988). The Hudson River approaches differ from those used for Lake Michigan, in which the numbers entrained or impinged were related to numbers or weights of fish in the lake or caught in the fishery. Interpreting such comparisons is very difficult because (1) the entrained (and probably also impinged) fish are younger and less valuable than those in the fishable stock and (2) impingement needs to be considered in relation to the life-cycle of the fish, not just on an annual basis. In the Hudson River, these issues were moot because estimates of the absolute size of stock standing crops or fishery yields were not available, in part because of the open nature of the estuary. Rather, emphasis was placed on the conditional entrainment and impingement mortality rates (Ricker 1975) (the fraction of an initial population that would be killed during the year if no other sources of mortality operated) imposed on each year class and on the resulting projected percentage reduction of the standing stock.

A reasonable consensus was eventually achieved about the magnitude of entrainment impact (Englert and Boreman 1988; Barnthouse et al. 1988a). Estimates of conditional entrainment mortality based on historical and projected once-through cooling operations at the five power plants ranged from 5 to 7 percent for Atlantic tomcod to 35 to 79 percent for bay anchovy (Englert and Boreman 1988). For most species, the impact of entrainment was considered more important than that for impingement. For white perch, however, the estimates of conditional impingement mortality were relatively large, ranging from 10 to 59 percent (Barnthouse and Van Winkle 1988).

The Hudson River studies were relatively unsuccessful in meeting the broader objective of extending these direct impact estimates to determine the percentage reduction of the corresponding fish populations in the estuary (Klauda et al. 1988; Barnthouse et al. 1988c). Out-of-court negotiations among many of the parties involved began in August of 1979 (Barnthouse et al. 1988a) in an effort to end the stalemate that was increasingly apparent, especially concerning

the long-term effects of the conditional mortality rates attributable to the power plants. These conditional entrainment and impingement mortality rates became the measures used to assess the impacts of existing operation. The successful result of these negotiations is summarized in Barnthouse et al. (1988a p. 269): "On December 19, 1980, the historic settlement agreement was signed by all parties. For the 10-year duration of the settlement, no cooling towers would be required. As an alternative, the utilities agreed to a variety of technical and operational changes intended to reduce entrainment and impingement. In addition, they agreed to supplement the production of striped bass in the Hudson River by means of a hatchery, to conduct a biological monitoring program, and to fund an independent research foundation for study of Hudson River environmental problems." The remainder of Barnthouse et al. (1988a) provides details of these elements of the settlement agreement.

The settlement agreement is expiring, and it is not certain what administrative procedures will occur in its aftermath. In responses to requests to federal and state agencies, NMFS mentioned that the Indian Point plant is "famous for entraining striped bass eggs and larvae" (Gorski 1990). The NMFS indicated that the attempt at mitigation by means of a striped bass hatchery has never been acceptable to the resource agencies, who have asked for closed-cycle cooling. The New York State Department of Environmental Conservation (NYSDEC) is the agency responsible for NPDES permits. It has expressed concerns about entrainment, impingement, and thermal discharge effects at Indian Point (Wich 1990). At present, entrainment and impingement effects at Indian Point are active issues; whether they will still be issues at the time of license renewal will be determined by the course of events that cannot now be predicted.

F.4.6 San Onofre Nuclear Generating Station

SONGS is a three-unit nuclear facility located on the coast of Southern California, roughly midway between Los Angeles and San Diego. All three units use once-through cooling systems, withdrawing water from the Pacific Ocean through submerged velocity-capped intake structures located at distances between approximately 900 and 980 m (3000 and 3200 ft) from shore in about 9 m (30 ft) of water. During normal operation, Unit 1 [436 MW(e)] withdraws water at a rate of 22 m^3/s (350,000 gal/min) and increases its temperature about 10° C (18° F) during passage through the plant. Units 2 and 3 are each rated at 1070 MW(e), and each withdraws approximately 50 m^3/s (800,000 gal/min), with a temperature increase of about 11° C (20° F). The Unit 1 discharge is through a single vertical pipe in 7.6 m (25 ft) of water about 762 m (2500 ft) from shore. Discharge of the larger units (2 and 3) is through 760-m (2500-ft) diffusers offset from one another and positioned more or less in sequence; for Units 2 and 3, they terminate 2500 m (8200 ft) and 1800 m (5900 ft) offshore, respectively.

Extensive studies of the effects of SONGS on aquatic biota have been conducted by the Marine Review Committee (MRC), appointed by the California Coastal Commission, over the period 1975-1989. These studies have recently been summarized and interpreted in a report of the MRC (MRC Document 89-02) supported by many other technical reports, databases, and other reports. Most of the conclusions are based on both near-field and far-field sampling before and after startup of Units 2 and 3. In the summary report, the extent of biological effects is estimated quantitatively. Adverse impacts are estimated to the kelp community (kelp, some fish, and kelp-bed invertebrates), to local populations of midwater fish species, and to far-field populations of fish in the Southern California Bight (the area between Point Conception and Cabo Colnett in northern Baja California). Besides quantifying these adverse impacts and identifying other biological effects, the report considers several distinct mitigative techniques, a combination of which is considered capable of providing complete mitigation (MRC Document 89-02). Note that the three-member MRC was not always unanimous in its judgments. In particular, one member felt that some of the conclusions understated the severity or extent of plant impact and that cooling towers should be installed as a mitigative measure.

Local adverse effects were measured on the kelp community in the San Onofre kelp bed (SOK), including giant kelp, kelp-bed fish, and large benthic kelp-bed invertebrates. The best estimate of reduction in the area covered by moderate- to high-density kelp in the SOK is 80 ha (200 acres). Fish living near the bottom in the SOK (e.g., sheephead, barred sandbass, and black surfperch) were estimated to be reduced by 70 percent [roughly 200,000 fish weighing about 25.4 metric tons (28 tons)] below the abundance expected in the absence of SONGS. The abundance of 13 species of snails and of the white sea urchin was estimated to have been reduced substantially (30-90 percent) below the levels expected without SONGS; other kelp-bed invertebrate species too rare to permit accurate sampling were also thought to

have declined. According to the report, "these effects, although local, are deemed substantial because kelp is a valuable and limited habitat." These kelp-bed effects were attributed mainly to changes in the physical environment in the SOK as a result of the sometimes turbid discharge plume. These key environmental changes were (1) reduction in light levels reaching the bottom, (2) increases in the flow and the rates of particles near the bottom, and (3) modification of currents near the plant.

Two kinds of additional adverse impacts were attributed mainly to losses because of entrainment or impingement (see also Helvey 1985). First, reductions in the local abundance of some midwater fish populations were measured. The local abundance of queenfish (a forage fish) was reduced by an estimated 30 to 70 percent, depending on the location, out to a distance of 1.9 to 3.1 km (1.2 to 1.9 miles) from SONGS. The estimated reduction for white croaker (a sport fish) was similar in magnitude, but over a smaller area. Several other species were believed to have experienced smaller reductions. Loss in the intake, predominantly due to impingement, was considered capable of explaining the loss of croaker and some of the loss of queenfish, but the operation of some other factor (such as plume turbidity) would also be required to explain some of the effects.

The second adverse entrainment/impingement impact concerns far-field effects. Consistent with the evaluation of such far-field effects in other plant-specific analyses (see, for example, the Hudson River power plants), the MRC report also recognizes that "even a major effect will be so diluted that the change will be indistinguishable from natural variation." For these effects, the MRC relied on inferred reductions rather than on attempts to measure effects. An "equivalent adult losses" method was used to estimate losses in recruitment due to measured (interpolated for young juveniles too small to be impinged) entrainment and impingement, and assumptions were made about the effect of biological compensation. Reductions "probably between one and ten percent" in the standing stocks of several midwater fish populations in the Southern California Bight were inferred. Because these latter entrainment/impingement effects could occur over large populations, they were considered by MRC to be substantial.

In contrast to these particular groups of organisms for which adverse plant impacts were measured or inferred, other groups of organisms showed no change or increased locally in abundance. With the exception of meroplankton (benthic larvae), which increased, other plankton was largely unaffected by operation of SONGS. Also, although entrainment of fish larvae, which are concentrated inshore at about the depths of the intakes, is considered an important contributor to reductions in adult stocks, there is no clear pattern of decreases in the abundance of fish larvae near SONGS. Differences between local and more distant sand crab populations are also felt to be unrelated to plant operation. General patterns of increases were seen among local benthic fish populations, soft-bodied benthic invertebrates, and mysids (semi- planktonic shrimp-like crustaceans).

Besides quantifying the biological effects of the operation of SONGS, the MRC report made recommendations concerning two sets of potential mitigative options. The first set concerned structural changes to the power plant. A majority of the MRC was opposed to backfitting cooling towers, and the MRC also discouraged moving the discharge diffusers. The second set of options would involve implementation of three to five mitigative techniques, selected from more than 30 that were considered. Finally, the MRC recommended increased monitoring as part of the changes to the NPDES program to determine the value of mitigative measures.

F.4.6.1 Cumulative Impacts

The MRC report (MRC Document 89-02) does not explicitly consider SONGS in the context of other power plants, of which there are at least six in the Southern California Bight (Helvey 1985). However, the fact that entrainment and impingement at these plants also contributes to impacts is recognized, and reduction of these impacts at other nearby plants is an optional part of one mitigative measure recommended by the MRC. In fact, noting studies at SONGS indicating that the thermal effluent from the plant is of little environmental concern, the MRC states that "the greatest environmental protection might result from a waiver of thermal standards at Southern California Electric's coastal power plants, because this would minimize the volume of water pumped through the plants" (MRC Document 89-02, pp. 297-298).

As of late 1990, the California Coastal Commission had not acted on the MRC's recommendations (personal communication, R. F. Ambrose, Marine Science Institute, University of California, Santa Barbara, to S. W. Christensen, ORNL, Oak Ridge, Tennessee, October 5, 1990). The final MRC report initially gives the impression of considerable confidence in the conclusions of impact and in the ability of the recommended mitigative measures to achieve complete mitigation. Further reading reveals the importance of many estimates and assumptions made in reaching the conclusions and an explicit discussion of uncertainties. Whether the report's conclusions are contested or not remains to be seen. Nonetheless, the report demonstrates the ability of a focused, long-term project, applying consistent sampling and study techniques, to reach meaningful conclusions about the impacts of a power plant on aquatic organisms and about ways to mitigate these impacts.

F.4.7 Crystal River Nuclear Plant

The Crystal River Power Station consists of five units that withdraw cooling water from the Gulf of Mexico. Only one of the units, Unit 3, is nuclear powered; the other units are coal-fired. Two of the coal-fired units use closed-cycle cooling; the remaining units are once-through. All units use a common 5.5-km- (3.4-mile-) long intake canal and a 2.6-km- (1.6-mile-) long discharge canal (FPC 1985). Unit 3 discharges heated water into Crystal Bay at a rate of 43 m^3/s (680,000 gal/min) (Table 2.1); the total discharge of the three once-through units is approximately 83 m^3/s (1,318,000 gal/min) (FPC 1985). The change in temperature of the Unit 3 condensers is 9.5° C (17.1° F) (Table 2.3).

Important aquatic resources of Crystal Bay include a diverse benthic macroinvertebrate community, submerged macrophytes (seagrasses), coastal salt marshes, oyster reef communities, and a variety of finfish (e.g., bay anchovy, batfish, seatrout, red drum, spot, striped mullet) and shellfish (e.g., squid, shrimp, stone crab, blue crab) (FPC 1985).

Concerns about the impacts of the Crystal River Power Station on aquatic resources focus on thermal discharges and entrainment (Gardner 1990; Smallwood 1990). Based on data collected for the plant's 316(a) demonstration (FPC 1985), thermal effluents from the multiunit power station were considered by the Florida Department of Environmental Regulation (DER) to have substantially damaged the benthic macroinvertebrate and seagrass communities in a 1100-ha (2700-acre) mixing zone around the discharge canal (Olsen 1986). The DER also expressed concern about the entrainment by Crystal River Units 1, 2, and 3 of bay anchovies, crab larvae, and penaeid shrimp larvae. Conversely, DER agreed with the Florida Power Commission (FPC) conclusions that thermal discharges from Crystal River Units 1, 2, and 3 had enhanced productivity in the nearby salt marshes and increased the growth rates of oysters in areas moderately affected by heat.

Impacts to aquatic resources continue to be examined at this site as part of NPDES permit renewals. The Crystal River Station has recently been required by EPA to reduce total condenser cooling water withdrawals during a portion of the year [FPC, response to NUMARC survey (NUMARC)]. This flow reduction scheme would reduce the number of entrained organisms but would not reduce thermal effects. Installation of helper cooling towers would reduce thermal discharges from the Crystal River site (Charles Kaplan, Region 4 EPA, personal communication to G. F. Cada, ORNL, Oak Ridge, Tennessee, November 12, 1990).

F.5 Summary

[**Prev** | **Next** | **Top of file**]

A detailed consideration of these once-through nuclear power plants indicates that many of the aquatic resources issues evaluated in the licensing stage have not materialized as significant problems. Even at facilities where impact potential is considered to be greatest, these impacts have been difficult to quantify. For example, while localized effects of phytoplankton entrainment or scouring of bottom sediments near the discharge structure have been demonstrated in some instances, such impacts have not precluded the maintenance of balanced, indigenous populations of shellfish, fish, and wildlife; and the regulatory agencies regard these effects as acceptable.

Conversely, these examples illustrate that the entrainment and impingement of fish and the discharge of heated effluents from once-through power plants continue to concern some regulatory and resource agencies. In some

instances, the NPDES permit and 316(a) and (b) review processes have not been completed, and the acceptability of impacts or the need for mitigation are still under consideration. As noted in Section 4.2, those aquatic resources issues that have not been resolved to the satisfaction of EPA or the state water quality permitting agency as part of the discharge permitting process will need to be considered in the license renewal application.

F.6 Endnotes

[**Prev** | **Next** | **Top of file**]

The discrepancy between the estimates in the FES and the estimates provided by AP&L are probably explained in large part by one or both of two possibilities. First, comparison of information in Zweiacker et al. (1977) with AP&L's estimate suggests that AP&L's estimate may consist of actual collections of impinged fish during sampling that covered 6 days per week during 6 weeks per quarter, without scaling up to estimate impingement during periods not sampled. Second, the first year of operation represented by AP&L's estimates may not correspond exactly to the period for which estimates were made in the FES.

The National Reservoir Research Data Bases are available from Southeastern Wildlife and Fisheries Statistics Project, Institute of Statistics, North Carolina State University, Box 8203, Raleigh, NC 27605-8203. Documentation describing the data is not currently available. In addition, other caveats apply: serial correlation is possible and may interfere with the analysis, and other assumptions (e.g., equality of the within-group covariance matrices) sometimes were not satisfied or could not be tested.

The (calculated) estimates for both entrainment and impingement at the proposed plants appear to be too low by at least a factor of 8 in relation to the regression equations and the stated number and capacity of the new plants. The reason for this apparent discrepancy cannot be determined from the information available (John Kelso, Great Lakes Biolimnology Laboratory, personal communication to S. W. Christensen, ORNL, Oak Ridge, Tennessee, January 28, 1991).

The staff presents these results from Jensen et al. but notes that it is not able to reproduce approximately the estimates of percentages impinged, even though seemingly sufficient information is provided in the paper. Insufficient information is provided to try to reproduce the estimates of percentages entrained.

The staff noted that the commercial catch estimates presented and used by Jensen et al. for alewife in Lake Michigan, but not for smelt, differ typically by a factor of 2 to 4--depending on the year--from those given by Scott-Wasilk et al. These differences result from the exclusion from the Scott-Wasilk et al. table of commercial catch data for alewife in Green Bay.

The source of the variation in the entrainment and impingement coefficients is not clear, but it may be derived from year-to-year variation in biomass in the models.

F.7 References

[**Prev** | **Next** | **Top of file**]

AEC Docket 50-313, *Final Environmental Impact Statement Related to the Arkansas Nuclear One, Unit 1*, U.S. Atomic Energy Commission, February 1973.

AP&L (Arkansas Power and Light Company), *Arkansas Nuclear One Generating Station, Dardanelle Reservoir Environmental Monitoring Program, Summary Report of Environmental Impact of Thermal Discharge*, October 30, 1984.

AP&L. *Summary of Entrainment at Arkansas Nuclear One from 1977 through 1982*, undated report with responses to the NUMARC survey, 1990.

Barnthouse, L. W., and W. Van Winkle, "Analysis of Impingement Impacts on Hudson River Fish Populations," *American Fisheries Society Monograph*, **4**, 182-90, 1988.

Barnthouse, L. W., et al., "Hudson River Settlement Agreement: Technical Rationale and Cost Considerations," *American Fisheries Society Monograph*, **4**, 267-73, 1988a.

Barnthouse, L. W., et al., "Science, Law, and Hudson River Power Plants: A Case Study in Environmental Impact Assessment," *American Fisheries Society Monograph*, **4**, 1988b.

Barnthouse, L. W., et al., "What We Didn't Learn About the Hudson River, Why, and What It Means for Environmental ent," *American Fisheries Society Monograph*, **4**, 329-35, 1988c.ter, J. S., Duke Power Company, letter to S. W. Christensen, ORNL, Oak Ridge, Tennessee, September 4, 1990.

Chang, W. Y. B., and R. Rossman, "Effects of Power Plant Entrainment on Phytoplankton Response," *Verhandlungen Internationale Vereinigung Limnologie*, **22**, 2493-97, 1985.

Christensen, S. W., and T. L. Englert, "Historical Development of Entrainment Models for Hudson River Striped Bass," *American Fisheries Society Monograph*, **4**, 133-42, 1988.

CONF-740820 (STI/PUB/378, IAEA-SM-187/48), J. W. McMahon and A. E. Docherty, "Effects of Heat Enrichment on Species Succession and Primary Production in Fresh-Water Plankton," pp. 529-46 in *Proceedings of a Symposium on the Environmental Effects of Cooling Systems at Nuclear Power Plants*, 1975.

Duke Power Company, *McGuire Nuclear Station, 316(b) Predictive Study of Impingement and Entrainment*, Charlotte, North Carolina, 1978.

Duke Power Company, *McGuire Nuclear Station, 316(a) Demonstration*, Charlotte, North Carolina, 1985.

Duke Power Company, *McGuire Nuclear Station, Summary of Ecological Impacts, and Plan of Continuing Study: Supporting Documentation for Modification of NPDES Permit No. NC0024392*, Charlotte, North Carolina, 1988.

DUKE PWR/82-02, J. E. Hogan and W. D. Adair, eds., *Lake Norman Summary*, Vols. 1 and 2, Duke Power Company, Production Environmental Services, Huntersville, North Carolina, 1982.

Englert, T. L., and J. Boreman, "Historical Review of Entrainment Impact Estimates and the Factors Influencing Them," *American Fisheries Society Monograph*, **4**, 143-51, 1988.

EPRI EA-5200s, *Compensatory Mechanisms in Fish Populations: Literature Reviews*, Vols. 1-3, Electric Power Research Institute, Palo Alto, California, 1987.

Evans, M. S., "Benthic and Epibenthic (*Microcrustaceans, Macrobenthos*) Community Structure in the Vicinity of a Power Plant, Southeastern Lake Michigan," *Verhandlungen Internationale Vereinigung Limnologie*, **22**, 488-94, 1984.

Evans, M. S., et al., "Effects of the Donald C. Cook Nuclear Power Plant on Zooplankton of Southeastern Lake Michigan," pp. 125-39 in L. D. Jensen, ed., *Fourth National Workshop on Entrainment and Impingement*, EA Communications, Melville, New York, 1977.

FPC (Florida Power Corporation), *Final Report--Crystal River*, 316 Studies, Florida Power Corp., January 15, 1985.

Gardner, T., Florida Department of Natural Resources, letter to G. F. Cada, ORNL, Oak Ridge, Tennessee, May 30, 1990.

Geo-Marine, Inc., *The Distribution of Temperature and Dissolved Oxygen in the Vicinity of Arkansas Nuclear One, Final Report*, Vol. 1, conducted for Arkansas Power and Light Company, 1976.

Gorski, S. W., NMFS, letter to G. F. Cada, ORNL, Oak Ridge, Tennessee, July 18, 1990.

Hamilton, R. B., North Carolina Wildlife Resources Commission, conversation with S. W. Christensen, ORNL, Oak Ridge, Tennessee, August 31, 1990, clarifying a letter from R. B. Hamilton to G. F. Cada, ORNL, Oak Ridge, Tennessee, dated June 20, 1990.

Helvey, M., "Behavioral Factors Influencing Fish Entrapment at Offshore Cooling-Water Intake Structures in Southern California," *Marine Fisheries Review*, **47**(1), 18-26, 1985.

Hutchison, J. B., Jr., "Technical Descriptions of Hudson River Electricity Generating Stations," *American Fisheries Society Monograph*, **4**, 113-20, 1988.

Jensen, A. L., et al., "Use of Conventional Fishery Models to Assess Entrainment and Impingement of Three Lake Michigan Fish Species," *Transactions of the American Fisheries Society*, **111**, 21-34, 1982.

Kelso, J. R. M., and G. S. Milburn, "Entrainment and Impingement of Fish by Power Plants in the Great Lakes Which Use the Once-Through Cooling Process," *Journal of Great Lakes Research*, **5**, 182-94, 1979.

Kelso, J. R. M., and G. S. Milburn, "Response to Comment by J. Scott-Wasilk et al.," *Journal of Great Lakes Research*, **7**, 495-97, 1981.

Klauda, R. J., et al., "What We Learned About the Hudson River: Journey Toward an Elusive Destination," *American Fisheries Society Monograph*, **4**, 316-28, 1988.

Lewis, R. E., "Opportunity for Management of Natural Resources Through Utility and Regulatory Cooperation," *Presentations at the 120th Annual Meeting of the American Fisheries Society*, Pittsburgh, Pennsylvania, 1990.

Loar, J. M., et al. "An Analysis of Factors Influencing the Impingement of Threadfin Shad at Power Plants in the Southeastern U.S.," pp. 245-55 in L. D. Jensen, ed., *Fourth National Workshop on Entrainment and Impingement*, Chicago, Illinois, December 5, 1977, EA Communications, Inc., Melville, New York, 1978.

Madenjian, C. P., et al., "Intervention Analysis of Power Plant Impact on Fish Populations," *Canadian Journal of Fisheries and Aquatic Sciences*, **43**, 819-29, 1986.

McInerny, M. C., "Gas-Bubble Disease in Three Fish Species Inhabiting the Heated Discharge of a Steam-Electric Station Using Hypolimnetic Cooling Water," *Water, Air, and Soil Pollution*, **49**, 7-15, 1990.

MRC Document 89-02, W. W. Murdoch, et al., *Final Report of the Marine Review Committee to the California Coastal Commission*, California Coastal Commission, Marine Review Committee, San Francisco, 1989.

NUMARC (Nuclear Management and Resources Council), *Survey of U.S. Utility-Owned Nuclear Power Plants*, Oak Ridge National Laboratory, Oak Ridge, Tennessee, and NUMARC, Washington, D.C., June 1990.

NUREG-0254, *Final Environmental Statement Related to Operation of Arkansas Nuclear One, Unit 2*, U.S. Nuclear Regulatory Commission, Office of Nuclear Reactor Regulation, 1977.

NUREG-CONF-002, S. W. Christensen, et al., "Defining and Determining the Significance of Impacts: Concepts and Methods," pp. 191-219 in R. K. Sharma et al., eds., *The Biological Significance of Environmental Impacts*, U.S. Nuclear Regulatory Commission, 1976.

Olsen, L. A., Florida Department of Environmental Regulation, interoffice memorandum to J. P. Subramani, Florida Department of Environmental Regulation, February 4, 1986.

Ricker, W. E., "Computation and Interpretation of Biological Statistics of Fish Populations," *Fisheries Research Board of Canada*, Bulletin 191, 1975.

Rickett, J. D., *Dardanelle Reservoir-Illinois Bayou Embayment Survey*, Progress Report Number 26, February 7, 1983.

Rickett, J. D., and Watson, R. L., "Phytoplankton Community Structure in Dardanelle Reservoir, Arkansas, 1975-1982," *Arkansas Academy of Science Proceedings*, **37**, 70-73, 1983a.

Rickett, J. D., and Watson, R. L., "Zooplankton Community Structure in Dardanelle Reservoir, Arkansas, 1975-1982," *Arkansas Academy of Science Proceedings*, **37**, 65-69, 1983b.

Rickett, J. D., and Watson, R. L., "Fluctuations and Relationships of Selected Physicochemical Parameters in Dardanelle Reservoir, Arkansas, 1975-1982," *Arkansas Academy of Science Proceedings*, **34**, 98-102, 1985.

Scott-Wasilk, J., et al., "A Comment on the Paper by John R. M. Kelso and Gary S. Milburn, 'Entrainment and Impingement of Fish by Power Plants in the Great Lakes Which Use the Once-Through Cooling Process,'" [*J. Great Lakes Res.*, 5, 182-94 (1979)], *Journal of Great Lakes Research*, **7**, 491-95, 1981.

Smallwood, S., Florida Department of Environmental Regulation, letter to G. F. Cada, ORNL, Oak Ridge, Tennessee, May 31, 1990.

Spigarelli, S. A., et al., "Selected Temperatures and Thermal Experience of Brown Trout, *Salmo Trutta*, in a Steep Thermal Gradient in Nature," *Env. Biol. Fish.*, **8**(2), 137-49, 1983.

Thurber, N., and D. Jude, *Impingement Losses at the D. C. Cook Nuclear Plant During 1975-1979 with a Discussion of Factors Responsible and Relationships to Field Catches*, Special Report No. 104, Great Lakes Research Division, University of Michigan, Ann Arbor, Michigan, 1984.Tilley, S., *A Summary of the Dardanelle Reservoir Fishery Survey Annual Reports*, Arkansas Power and Light, Environmental and Technical Services, 1983.

Van Winkle, W., et al., "An Analysis of the Ability to Detect Reductions in Year-Class Strength of the Hudson River White Perch (*Morone Americana*) Population," *Canadian Journal of Fisheries and Aquatic Sciences*, **38**(6), 627-32, 1981.

Wich, K. F., NYSDEC, letter to G. F. Cada, ORNL, Oak Ridge, Tennessee, July 6, 1990. Zweiacker, P. J., et al., "Evaluation of an Air-Bubble Curtain to Reduce Impingement at an Electric Generating Station," pp. 343-56 in *Proceedings of the 31st Annual Conference of the Southeastern Association of Fish and Wildlife Agencies*, Vol. 31, 1977.

Appendix G : Postulated Accidents

[**Prev** | **Next** | **Top of file**]

G.1 Statistical Analysis

[**Prev** | **Next** | **Top of file**]

G.1.1 Introduction

For 28 nuclear plants, final environmental statement (FES) estimates of risk quantities exist: early fatality, normalized latent fatality, normalized total dose, and normalized expected cost. The last three estimates are normalized to a per 1000-MW(t) (thermal megawatts) basis. The estimates are made using the Calculation of Reactor Accident Consequences (CRAC) computer code for the middle year of the current licensing (MYL) period. The CRAC runs are costly and difficult, requiring expensive input data.

There are also 16-, 80-, and 240-km (10-, 50-, and 150-mile) exposure index projections for the MYL and for the middle year of the license renewal (MYR) period, usually either 2030 or 2050, for the 28 (FES) nuclear plants and 46 other (non-FES) plant sites. Exposure indices are population averages weighted by wind-direction frequency, as

discussed in Chapter 5. The exposure index projections are relatively easy and inexpensive to compute. Thus, the FES data will be used to investigate the relationship between the calculated FES estimates of the four risk quantities and the exposure index and to derive a prediction equation with which we could (1) predict the MYR estimates as a function of exposure index and (2) place upper confidence bounds on the predictions.

Because of the basic design differences, a nuclear power plant's reactor type (pressurized water or boiling water) may be an important factor in the relationship between the risk quantity estimates and exposure index. Of the FES plants, 18 are pressurized-water reactors (PWRs) and 10 are boiling-water reactors (BWRs). BWRs can be further subgrouped based on the containment type (Mark I, Mark II, or Mark III), but among the FES plants there are only a few of each type. (For example, only two are Mark I containment plants.) Using a regression analysis that parallels the one to be described, tests were conducted for differences in regression parameters among the three boiling-water containment types, but none of significance for any risk estimate (i.e., $p > 0.05$ for all estimates) was found. Therefore, at the outset, all BWRs were identified simply as "B" and PWRs as "P."

Prediction equations are based on regression relations between risk estimates and exposure indices. Perhaps the most natural starting point is the straight-line model: estimate = $a + b$ (exposure index) + random error. Because there are two reactor types, two lines are considered simultaneously; that is,

$$\text{estimate} = a_{type} + b_{type}(\text{exposure index}) + e, \quad \text{(G.1)}$$

where e denotes a random error, and *type*, B or P, distinguishes BWRs from PWRs. The error term represents the lack of information that would be provided by other independent variables, if available, as well as the randomness of the 28 FES plants considered as a random sample of all plants. The CRAC estimate is deterministic in the sense that it is the output of a computer program but could also exhibit randomness associated with random input arguments.
Eq. (G.1) has four parameters: two intercepts and two slopes.

Fitting the model gives least squares estimates of the a_{type} and b_{type}. Call them $\hat{a}_{type}$ and $\hat{b}_{type}$. For each plant in the observed data set, there are also predicted values, $\hat{a}_{type} + \hat{b}_{type}$ (exposure index) and residuals, which are the estimates minus their predicted values. The residual for an observation may be thought of as an approximation to the error for that observation, because under fairly general conditions the difference approaches zero as the sample size increases.

The error component in a model like Eq. (G.1) is often assumed without justification to be normal. Perhaps this is because the parameter estimates do behave normally as the sample size increases (Huber 1981, Section 7-2). However, in applications involving prediction, it is known that the assumption of normality can lead to serious errors. This is because laws of large numbers, which apply to parameter estimates, do not apply to predictions of single new observations.

The objective is to obtain a strong regression relationship that will provide prediction confidence bounds and will allow inferences to be made regarding the regression parameters. To do this, a good regression must exhibit the following properties.

The distribution of residuals should be roughly normal--symmetric and without extreme outliers. This property ensures that the asymptotic (large-sample) normality of parameter estimates can be used as an adequate approximation in finite samples, which in turn is needed to make inferences about the parameters.
The residuals should show no trend in the predictor variable(s). The presence of a trend in the residuals suggests that additional (e.g., higher order) terms in the predictors might improve the fit significantly.
The residuals should be statistically stable in the predictor(s) (e.g., they should not fan out). If the residuals are not statistically stable, the error distribution probably changes with the predictors, so neither residuals nor errors can be lumped together for study, at least without other strong assumptions.
Properties 1, 2, and 3 can be assessed using residual plots.

The following discussion makes use of the R^2 statistic, known as "the squared multiple correlation coefficient" and "the proportion of explained variance." R^2 indicates how well data and model agree; it is 1 when the data fit perfectly. However, a higher R^2 does not automatically imply a better model. Additional predictor variables always increase R^2, regardless of whether there is any significant improvement, and the inclusion of insignificant terms in a model can inflate the standard errors of predictions based on it. Also, sometimes R^2 is quite high for models with severe outliers among the residuals. These factors were considered in the development of these models.

Now consider a new exposure index, say exposure index $^{/}$, not necessarily in the original 28. A prediction of a new risk estimate (estimate$^{/}$) at exposure index$^{/}$ is obtained by simply plugging the new exposure index into the fitted regression model for the appropriate reactor type. According to the most common definition, an upper confidence bound U for estimate$^{/}$ is a function of the observed data that satisfies the probability statement

$$P(\text{estimate}' \leq U) = 1 - \alpha$$

for some specified level of confidence 1 - a . Often a is taken to be 0.05. The probability in Eq. (G.2) is with respect to an assumed statistical model, in our case Eq. (G.1), before (and not conditional upon) any of the observations. We have

$$\text{estimate}' = a_{type} + b_{type}(\text{exposure index}') + e'. \quad (G.3)$$

The random error components, e in Eq. (G.1) and $e^{/}$ in Eq. (G.3), affect the prediction problem in two ways. First, estimates $_{type}$ and $_{type}$ are uncertain. Second, even if a_{type} and b_{type} were known exactly, estimate$^{/}$ would still not be known because of $e^{/}$. As indicated above, assessing the errors $_{type}$ and $_{type}$ is fairly straightforward, although an asymptotic approximation is usually incurred. The difficulty is in estimating the distribution of e. Because our interest is in upper confidence bounds for predictions, there is special interest in the upper tail of the error distribution. Usually, many more observations are needed to estimate upper tails than for central quantities such as a mean.

Compounding the problem is that errors are not observed--they are only residuals. Although the residuals and errors converge as the sample size increases, the sample size is only 28. The residuals pend on $_{type}$ and $_{type}$. They do differ from the errors, and they are not statistically independent.

The "standard" approach to prediction confidence bounds is based on the assumption of normality of errors. When this assumption holds, the standard approach is optimal and valid in the sense of Eq. (G.2). When the assumption fails, Eq. (G.2) may be off considerably. This is discussed in further detail in Schmoyer (1990).

Coming up with small-sample regression prediction confidence bounds without making strong assumptions (e.g., normality of errors) is a difficult problem for which no good solution is currently known. Such confidence bounds would be considered "distribution free" or "nonparametric," because they require no parametric assumptions about the error distribution.

Schmoyer (1990) discusses asymptotically valid nonparametric prediction confidence bounds. For these bounds, under a few weak conditions, Eq. (G.2) holds in the limit as the sample size increases. Schmoyer discusses "bootstrap" (Stine 1985) and "cross-validation" (Butler and Rothman 1980) prediction bounds. The bootstrap bounds are computationally intensive and not exactly reproducible (i.e., they involve a Monte Carlo procedure). The cross-validation bounds were designed for symmetrically distributed data. However, Schmoyer considers an asymmetric analog. He also proposes new bounds and shows that they tend to be better than the cross-validation bounds in terms of approximating [Eq. (G.2)].

The asymptotically valid approach seems better than the standard approach, if normality is unsubstantiated. However, the former is still premised on a large-sample approximation. For this project, the prediction bounds proposed by

Schmoyer were computed for comparison with the normal-theory approach. Disparity between the two suggests that the normal-theory bounds may be off. These bounds will here be referred to as the "distribution-free" bounds.

In Schmoyer, it is argued that distribution-free upper prediction bounds should not be calculated for levels of confidence higher than 1-1/(n + 1), where n is the sample size. This is related to the idea that the largest distribution-free upper prediction bound from a simple random sample of size n is the nth (the largest) order statistic, and the probability that a new observation exceeds the nth order statistic is 1/(n + 1) .

If the assumption of normality is suspect, the same caveats would seem to apply even more strongly to the normal-theory bounds. One can formally use higher levels of confidence to obtain higher bounds. However, attaching an interpretation such as Eq. (G.2) to such bounds seems very tenuous.

As R^2 decreases from 1, the issue of statistical noise becomes more important and must be addressed. In particular, as R^2 decreases, the best predictions will tend to become considerably lower than their corresponding upper confidence bounds, whether normal or distribution free. For additional discussion of regression, residuals, prediction, and R^2, see Draper and Smith (1981).

G.1.2 Regressions

Individual regressions are discussed in the following paragraphs. For each regression, models such as Eq. (G.1) were fitted both without and with log-transforming the data. In the log case, logs of both estimates and exposure indices were used. In all cases, for the regressions without log transformations, the residuals have outliers and tend to fan out as the exposure index increases, whereas the residual plots look much better in the log case. This is illustrated in residual plots, which follow. Therefore, the no-log approach has not been pursued.

G.1.2.1 Early Fatality Caused by a Severe Accident

Because of a threshold dose phenomenon, it does not make sense to normalize early fatalities. Therefore, only the 22 plants with capacities greater than 3025 MW(t) (and consequently the largest source terms) were considered for this regression.

Of these, the Wolf Creek plant has an estimated early fatality that is (identically) zero and therefore had to be dropped when logs were taken. This leaves 21 plants for the early fatality regression. (Note that the zero expected early fatality estimate may be illogical in the sense that the expectation of a nonnegative quantity can only be zero if the quantity is itself zero with certainty.)

The FES consequence analyses found that most early fatalities occurred within 8 to 80 km (5 to 50 miles) of the plant. Therefore, early fatality was considered to be most highly related to the 16- or 80-km (10- or 50-mile) exposure indices. Consequently, the regression of early fatality on the 16- and 80-km (10- and 50-mile) indices was considered, first individually, then together in a multiple regression. R^2 values are 0.55 for the 16-km (10-mile) index, 0.32 for the 80-km (50-mile) index, and 0.68 for the multiple regression. Each of these regressions has a high overall significance ($p < 0.0001$). However, in the multiple case, the 16-km (10-mile) term is significant (p = , whereas the 80-km (50-mile) term is not ($p = 0.93$). Therefore, only the 16-km (10-mile) exposure index and reactor type were selected for predicting early fatality.

Figure G.1 is a residual plot for the regression of early fatality on the 16-km (10-mile) exposure index and reactor type. This and all subsequent plots in this

Figure G.1 Residuals from regression of the log of early fatality (average deaths per reactor year) on the log of 16-km (10-mile) exposure index of persons at risk.

(Reactor type: B = boiling water, P = pressurized water.)

appendix are on base-10 log scales. Thus a difference of one unit in the residuals corresponds to a factor of 10 difference between the fitted and actual values on the original scale. It seems to satisfy properties 1 through 3, except perhaps for a tendency for the B residuals to be slightly more scattered. This could be because the B-types are not resolved into their three subclasses. The intercept and slope estimates (± standard error) for this regression are -7.81 ± 0.91 and 1.22 ± 0.28 for PWRs and -5.09 ± 1.40 and 0.42 ± 0.42 for BWRs.

Figure G.2 shows the log of acute fatalities within 16 km (10 miles) of 21 FES plants.

G.1.2.2 Normalized Latent Fatalities and Normalized Total Dose Resulting from a Postulated Severe Accident

Normalized latent fatalities and total dose are thought to be related to the 240-km (150-mile) exposure index. R^2 for the regression of either the normalized total dose or latent fatality on the 240-km (150-mile) index is 0.68. Both of these are highly significant ($p < 0.0001$). Figures G.3 and G.4 are residual plots. In both cases, assumptions 1 through 3 seem to be met, except for (1) a tendency for the B residuals to be more dispersed, (2) a single P outlier, and (3) a slight suggestion that a quadratic term in the 240-km (150-mile) index might improve the fit. The significance levels for quadratic

Figure G.2 Log plot of early fatalities per reactor year within 16 km (10 miles) of 21 nuclear power plants [3300 MW(t) or greater], resulting from postulated accidents, regressed on log of exposure index (EI) for 16 km (10 miles). (EI is the sum of the products of wind frequency in 22.5° quadrants and population in those sectors. P = pressurized-water reactors, B = boiling-water reactors.)

Figure G.3 Residuals from regression of log of normalized latent fatality (average deaths per 1000-MW reactor-year) on the log of 240-km (150-mile) exposure index of persons at risk. (Reactor type: B = boiling water, P = pressurized water.)

Figure G.4 Residuals from regression of the log of normalized total dose (rem per 1000-MW reactor-year) on the log of 240-km (150-mile) exposure index of persons at risk. (Reactor type: B = boiling water, P = pressurized water.)

terms, when included in the models, are 0.05 for normalized latent fatalities and 0.04 for normalized total dose. Fitting the quadratic terms does not improve the problem of the greater dispersion among B residuals. The outlier, which is Indian Point, is discussed further in Section G.1.3. Intercept and slope estimates are shown in Table G.1.

Figures G.5 and G.6 show the normalized latent fatalities and total dose, respectively, at 28 FES plants.

G.1.2.3 Normalized Expected Cost Resulting from a Postulated Severe Accident

Loss of property and other economic impacts caused by a postulated accident generally would be larger as population increased. Consequently, as with latent fatalities and fatal dose, it is reasonable to project the expected costs for an accident during the license renewal period using population or using the exposure index. Because the relationship of cost to the various candidate explanatory variables was less clear than in the fatality or dose cases, it was necessary to experiment with a greater variety of regression models. First considered were the regressions of normalized expected cost on 80-km (50-mile) radius population values; the 16-, 80-, and 240-km (10-, 50-, and 150-mile) exposure indices, and on each index in conjunction with population. Because only about half of the cost of an accident is expected to be incurred within 80 km (50 miles), the 240-km (150-mile) radius seems more appropriate.

Economic consequences were also benchmarked to the MELCOR Accident

Table G.1 Regression estimates (± standard error) for reactor plants

Dependent variable	Intercept	Slope
Pressurized-water reactors		

Normalized latent fatalities	-11.35 ± 1.47	1.55 ± 0.25
Normalized total dose	-6.94 ± 1.45	1.51 ± 0.25
Boiling-water reactors		
Normalized latent fatalities	-6.05 ± 1.32	0.67 ± 0.23
Normalized total dose	-1.78 ± 1.30	0.66 ± 0.25

Figure G.5 Log plot of normalized latent fatalities per 1000 MW(t) per reactor-year of 28 nuclear power plants resulting from postulated accidents, regressed on log of exposure index (EI) at 240 km (150 miles). (EI is the sum of the products of wind frequency in 22.5° sectors and population in those sectors. P = pressurized-water reactors, B = boiling-water reactors.)

Figure G.6 Log plot of normalized total dose in person-rem per 1000 MW(t) per reactor-year within 240 km (150 miles) of 28 nuclear power plants [3300 MW(t) or greater] resulting from postulated accidents, regressed on log of exposure index (EI). (EI is the sum of the products of wind frequency in 22.5° sectors and population in those sectors. P = pressurized-water reactors, B = boiling-water reactors.)

Consequence Code System (MACCS) computer code to ensure the calculated values were based on the most current models and data. The benchmark computations indicated that the CRAC calculations used to estimate the economic impacts for the FES plants did not have a continuous linear relationship with population. Rather, the MACCS code predicted higher costs than did the CRAC code; low population sites were underpredicted by substantial margins. The differences were primarily due to the difference in the handling of decontamination costs in the two codes. Results from Tingle (1993) indicate that for the results to be comparable to results calculated from MACCS, the regression values should be adjusted through the use of population-dependent correction factors. Table 5.31 reflects average expected cost values that were derived from the regression and then corrected with the following factors:

- Sites with MYR 10 mile populations < 10,000 multiply cost data by 40.
- Sites with MYR 10 mile populations > 10,000 and < 50,000 multiply cost data by 25.
- Sites with MYR 10 mile populations > 50,000 multiply cost data by 15.

Also, the FES values were in 1980 dollars. To correct for this, the average expected cost values were inflated to 1994 dollars.

Because no expected cost data are available for Indian Point, these regressions are based on 27 observations. R^2 values for the regressions are listed in Table G.2.

All of these regressions are highly significant ($p < 0.0001$). However, in each of the multiple regressions, the regression terms associated with population, after adjusting for the exposure index, were insignificant ($p > 0.05$). Thus, the model based on reactor type and only the 240-km (150-mile) exposure index were selected for predicting normalized expected cost.

Figure G.7 is a residual plot for the regression of normalized expected cost on the 240-km (150-mile) exposure index. Assumptions 1 through 3 are supported, except that the residual dispersion is greater among the Bs than the Ps. The intercept and slope estimates for this regression are -4.12 ± 1.92 and 1.30 ± 0.33 for PWRs and -0.06 ± 1.45 and 0.62 ± 0.25 for BWRs. Figure G.8 shows the regression for normalized expected cost on the 150-mile exposure index.

G.1.2.4 Comments on the Regressions

The previous regression analyses have led to fairly simple straight-line models. There are problems with the models, however, particularly the greater dispersion among the B residuals. If separate B types (1, 2, 3) are considered, the B

dispersion is much smaller--so small, in fact, that the B residuals should not be used for making predictions. This is because of the large number of parameters (i.e., slopes and intercepts) being used to accommodate the B data. In this case, the P residuals alone should be used to compute prediction intervals, even for the B data, and there are only 18 P residuals. According to our "1/(n+1)" rule, even 95 percent confidence levels would then be suspect. We could use 90 percent confidence intervals instead, but then the intervals would be shaky simply because 90 percent does not represent a very high level of confidence.

Table G.2 R^2 values for normalized expected cost regressions

Predictors	R^2 value
Reactor type and population	0.39
Reactor type and 16-km (10-mile) index	0.40
Reactor type and 80-km (50-mile) index	0.49
Reactor type and 240-km (150-mile) index	0.51
Reactor type, 16-km (10-mile) index, and population	0.45
Reactor type, 80-km (50-mile) index, and population	0.48
Reactor type, 240-km (150-mile) index, and population	0.56

Figure G.7 Residuals from regression of the log of normalized expected cost (dollars per 1000-MW reactor-year) on the log of 240-km (150-mile) exposure index of persons at risk. (Reactor type: B = boiling water, P = pressurized water.)

Alternatively, separate regressions could be performed for the B and P data. However, because there are only ten B data points, the P predictions would still suffer from the small size and the B predictions even more so.

The best remedy for the problem of the greater B dispersion is to get more B data.

When the B residuals are numerous enough relative to the number of parameters being fitted to them, they can be used together with the P residuals to make predictions.

G.1.3 Predictions

Predictions are computed simply by plugging predictors into fitted regression equations. Collectively, they form the fitted regression line or curve. This is illustrated in Figures G.8 through G.16.

That the MYL exposure indices are representative of the MYR exposure indices is evident from the cumulative distribution functions in Figures G.17 and G.18. A cumulative distribution function of a set of data (here exposure indices) specifies for every number *x* the proportion of the set

Figure G.8Log plot of normalized expected cost per 1000 MW(t) per reactor-year of 27 nuclear power plants [3300 MW(t) or greater] resulting from postulated accidents, regressed on the log of exposure index (EI). (EI is the sum of the products of wind frequency in 22.5° sectors and population in those sectors. P = pressurized-water reactors, B = boiling -water reactors.)

Figure G.9 Log plot of early fatalities (average deaths per reactor-year) for final environmental statement pressurized-water reactor plants, fitted regression line, and 95 percent normal-theory upper prediction confidence bounds (dotted curve).

Figure G.10 Log plot of early fatalities (average deaths per reactor-year) for final environmental statement boiling-water reactor plants, fitted regression line, and 95 percent normal-theory upper prediction confidence bounds (dotted curve.)

Figure G.11 Log plot of normalized latent fatalities (average deaths per 1000-MW reactor-year) for final environmental statement pressurized-water reactor plants, fitted regression line, and 95 percent distribution-free upper prediction confidence bounds (dotted curve).

Figure G.12 Log plot of normalized latent fatalities (average deaths per 1000-MW reactor-year) for final environmental statement boiling-water reactor plants, fitted regression line, and 95 percent distribution-free upper prediction confidence bounds (dotted curve).

Figure G.13 Log plot of normalized total dose (person-rem per 1000-MW reactor-year) for final environmental statement pressurized-water reactor plants, fitted regression line, and 95 percent distribution-free upper prediction confidence bounds (dotted curve).

Figure G.14 Log plot of normalized total dose (person-rem per 1000-MW reactor-year) for final environmental statement boiling-water reactor plants, fitted regression line, and 95 percent distribution-free upper prediction confidence bounds (dotted curve).

Figure G.15 Log plot of normalized expected cost (dollars per 1000-MW reactor-year) for final environmental statement pressurized-water reactor plants, fitted regression line, and 95 percent distribution-free upper prediction confidence bounds (dotted curve).

Figure G.16 Log plot of normalized expected cost (dollars per 1000-MW reactor-year) for final environmental statement boiling-water reactor plants, fitted regression line, and 95 percent distribution-free upper prediction confidence bounds (dotted curve).

Figure G.17 Cumulative proportions of the midyear license date for 16-km (10-mile) exposure index of persons at risk for final environmental statement plants and all other plants. [Year: _ = middle year of license (MYL), o = middle year of license renewal (MYR).]

Figure G.18 Cumulative proportions of the midyear license date for 240-km (150-mile) exposure index of persons at risk for final environmental statement plants and all other plants. [Year: _ = middle year of license (MYL), o = middle year of license renewal (MYR).]

having value no greater than *x*. In the figures, the MYL and MYR cumulative distribution functions are similar, indicating that the two populations are similar. Plots for individual reactor types are similar.

Representativeness is an advantage in several ways, one of which is that it implies that the predictions are not extrapolations. Extrapolation itself does not violate the assumptions of prediction interval theory, but it is known to exacerbate the effect of violating them.

When the assumption of normality of errors fails, normal-theory prediction confidence bounds can be far from valid. Testing the normal assumption in regression is a difficult problem. If regression errors were observable (rather than just residuals), a goodness-of-fit test for normality would be straightforward. Unfortunately, goodness-of-fit tests must be based on residuals, which depend on parameter estimates and are statistically dependent.

Even if errors were observable, it is essentially impractical to determine the practical importance of accepting or rejecting with a goodness-of-fit test. The test may be so lacking in power that an important deviation from normality would most likely go undetected. In that case, goodness-of-fit tests would likely also accept many non-normal distributions, some of which would imply considerably different prediction confidence limits. It can also happen that a goodness-of-fit test is so powerful that even unimportant deviations from normality would most likely be detected with high statistical significance.

In spite of the above caveats, a Shapiro-Wilks goodness-of-fit test for normality was performed on the regression residuals for the four models selected. Significance levels are $p = 0.04$ for acute fatalities, 0.55 for normalized total dose, 0.53 for normalized latent fatalities, and 0.21 for normalized expected cost. Thus, at least in the case of acute fatality, the normal assumption is immediately suspect. The outlying P residual in the normalized latent fatality and normalized total dose residual plots (Figures G.3 and G.4) casts doubt on the normal assumption for these variables as well, in spite of the acceptance of the goodness-of-fit test ($p > 0.05$).

Figures G.9 through G.16 contain the observed MYL data; the fitted regression lines; and normal-theory 95 percent (in the sense of Equation G.2) upper prediction confidence bounds for the fatality, dose, and cost variables. In our application, the sample size n is either 21, 27, or 28. [FES early fatalities could not be normalized, so only plants with MWT(t) > 3000 (21 out of 28 FES plants) were used to develop the correlation for early fatalities.]

The $n/(n+1)$ upper limit for a suitable level of confidence for prediction bounds is thus either 0.95, 0.96, or 0.97. Because 0.95 is a standard level, it is used for all prediction bounds.

The acute fatality regression is based only on plants of more than 3025 MW(t). These plants should tend to have greater expected acute fatality estimates than plants of less than 3025 MW(t). Therefore, acute fatality predictions based on the fitted regression for plants with less than 3025 MW(t) should tend to be high and thus conservative.Also computed for comparison were 95 percent distribution-free upper bounds, discussed in the introduction of this appendix and in Schmoyer. Tables G.3 through G.6 contain predictions and normal and distribution-free upper 95 percent prediction confidence bounds for the variables. Although the best fitted lines for both B and P reactors are determined solely by their own respective data, it is important to note that all (i.e., both B and P) residuals affect the upper prediction bounds, whether normal or distribution free. The MYR predictions are based on a projection of the exposure index for those time points (usually 2030 or 2050). The MYL actual estimates, when available, are included for reference.

In comparing the normal theory and distribution-free predictions bounds, the normal bounds can be either higher or lower. In the case of acute fatalities, they are higher; in the other cases, they are lower. In all cases they are clearly different. What the difference means in terms of practical importance is critical here, but it is not a statistical issue.

Table G.3 Middle year of the license renewal (MYR) early fatality predictions

Power plant	Reactor type[a]	16-km (10-mile) exposure index	MYL[b] early fatality estimate x 1000	MYR early fatality prediction x 1000	Normal theory 95 percent UCB[c] x 1000	Distribution free 95 percent UCB x 1000
Arkansas	P	1993		0.17	3.3	2.1
Beaver Valley	P	9535	2.0	1.1	25	17
Bellefonte	P	2317		0.20	4.0	2.5
Big Rock Point	B	476		0.11	2.7	1.9
Braidwood	P	2126	0.38	0.18	3.6	2.3
Browns Ferry	B	2019		0.20	4.3	2.8
Brunswick	B	1195		0.16	3.5	2.2
Byron	P	1468	0.26	0.11	2.3	1.4
Callaway	P	541	0.10	0.034	0.69	0.44

Calvert Cliffs	P	1232		0.093	1.8	1.2
Catawba	P	7219	1.1	0.80	17	11
Clinton	B	760	0.0090	0.13	3.0	2.0
Commanche Peak	P	1518	0.10	0.12	2.3	1.5
Cooper	B	411		0.10	2.6	1.8
Crystal River	P	1064		0.077	1.5	0.98
DC Cook	P	4163		0.41	8.4	5.4
Davis Besse	P	979		0.070	1.4	0.89
Diablo Canyon	P	1020		0.073	1.5	0.93
Dresden	B	2345		0.22	4.6	3.0
Duane Arnold	B	6283		0.33	8.0	5.6
Farley	P	1021		0.074	1.5	0.93
Fermi 2	B	4919	0.74	0.30	6.8	4.6
Fitzpatrick	B	1532		0.18	3.8	2.5
Fort Calhoun	P	1155		0.086	1.7	1.1
Ginna	P	2291		0.20	3.9	2.5
Grand Gulf	B	562	0.060	0.12	2.8	1.9
Haddam Neck	P	5476		0.57	12	7.7
Hatch	B	372		0.099	2.6	1.8
Hope Creek	B	1807	0.0090	0.19	4.1	2.6
Indian Point 2						
Indian Point 3			0.83			
Kewanee	P	671		0.044	0.89	0.57
La Salle	B	1307		0.17	3.6	2.3
Limerick	B	10709	5.4	0.41	11	8.7
Maine Yankee	P	1246		0.094	1.8	1.2
McGuire	P	4919		0.50	10	6.7
Millstone 3	P	9420	0.20	1.1	25	16
Monticello	B	1832		0.19	4.1	2.6
Nine Mile Point	B	1568	0.20	0.18	3.8	2.5
North Anna	P	704		0.047	0.94	0.60
Oconee	P	5184		0.53	11	7.2
Oyster Creek	B	5584		0.31	7.4	5.1
Palisades	P	2421		0.21	4.2	2.7
Palo Verde	P	96	0.0021	0.0041	0.11	0.078
Peach Bottom	B	1972		0.20	4.2	2.7
Perry	B	5020	0.016	0.30	6.9	4.7
Pilgrim	B	1435		0.18	3.7	2.4
Point Beach	P	1612		0.13	2.5	1.6
Prarie Island	P	2188		0.19	3.7	2.4
Quad Cities	B	2228		0.21	4.5	2.9
Rancho Seco	P	835		0.058	1.1	0.73
River Bend	B	1857	0.40	0.20	4.1	2.7
Robinson	P	1889		0.16	3.1	2.0
Salem	P	1808		0.15	2.9	1.9

San Onofre	P	5179	1.0	0.53	11	7.2
Seabrook	P	5234	0.60	0.54	11	7.3
Sequoyah	P	3471		0.33	6.6	4.2
Sheron Harris	P	1773	0.18	0.14	2.8	1.8
Shoreham	B	5915		0.32	7.7	5.3
South Texas	P	278	0.00070	0.15	0.33	0.22
St. Lucie	P	11447	0.070	1.4	32	22
Summer	P	902	0.17	0.063	1.3	0.80
Surry	P	6796		0.74	16	10
Susquehanna	B	3976	0.77	0.27	6.0	4.0
TMI	P	10327		1.2	28	19
Trojan	P	12556		1.6	37	25
Turkey Point	P	17852		2.4	60	42
Vermont Yankee	B	2408		0.22	4.6	3.0
Vogtle	P	141	0.010	0.0066	0.16	0.11
WNP-2	B	134	0.32	0.064	2.3	2.0
Waterford	P	6163	0.57	0.66	14	9.1
Watts Bar	P	1241		0.093	1.8	1.2
Wolf Creek	P	381		0.022	0.47	0.30
Yankee Rowe	P	1998		0.17	3.3	2.1
Zion	P	16913		2.3	56	39

[a]P = pressurized-water reactor; B = boiling-water reactor.

[b]MYL = middle year of license.

[c]UCB = upper confidence bound.

Table G.4 Middle year of the license renewal (MYR) normalized latent fatality (NLF) predictions

Power plant	Reactor type[a]	240-km (150-mile) exposure index	MYL[b] NLF estimate x 1000	MYR NLF prediction x 1000	Normal theory 95 percent UCB[c] x 1000	Distribution free 95 percent UCB x 1000
Arkansas	P	265479		1.2	4.5	6.0
Beaver Valley	P	1021547	8.3	9.8	35	49
Bellefonte	P	678549		5.2	18	26
Big Rock Point	B	136942		2.5	11	13
Braidwood	P	1615088	4.0	20	76	100
Browns Ferry	B	491751		6.0	22	30
Brunswick	B	256923		3.8	15	19
Byron	P	1214624	4.7	13	47	64
Callaway	P	373564	2.2	2.1	7.4	10
Calvert Cliffs	P	1459323		17	64	86
Catawba	P	914688	3.6	8.2	30	42
Clinton	B	1418383	6.6	12	45	61
Commanche Peak	P	353530	1.3	2.0	7.1	9.9
Cooper	B	428471		5.4	20	27
Crystal River	P	573211		4.0	14	20

DC Cook	P	1051654		10	37	51
Davis Besse	P	1104797		11	40	55
Diablo Canyon	P	302887		1.5	5.4	7.4
Dresden	B	1193394		11	40	54
Duane Arnold	B	329426		4.5	17	23
Farley	P	344405		1.8	6.6	9.1
Fermi 2	B	1287935	12	11	42	57
Fitzpatrick	B	270532		4.0	15	20
Fort Calhoun	P	242370		1.0	3.9	5.3
Ginna	P	357773		1.9	6.9	9.6
Grand Gulf	B	388245	1.4	5.1	19	25
Haddam Neck	P	1722399		22	85	110
Hatch	B	347873		4.7	18	24
Hope Creek	B	1955878	21	15	58	76
Indian Point	P	2863844		49	200	260
Indian Point 2			300			
Indian Point 3						
Kewanee	P	440217		2.6	9.4	13
La Salle	B	1396350		12	45	60
Limerick	B	2647224	29	18	74	95
Maine Yankee	P	391929		2.2	7.9	11
McGuire	P	890305		7.9	28	40
Millstone 3	P	1510698	15	18	68	90
Monticello	B	487606		5.9	22	30
Nine Mile Point	B	273322	6.9	4.0	15	20
North Anna	P	876587		7.7	28	39
Oconee	P	867675		7.6	27	38
Oyster Creek	B	1970098		15	58	77
Palisades	P	1041961		10	37	51
Palo Verde	P	290395	1.2	1.4	5.1	6.9
Peach Bottom	B	1453860		12	46	62
Perry	B	1021049	8.0	9.7	36	49
Pilgrim	B	486154		5.9	22	30
Point Beach	P	469985		2.9	10	15
Prarie Island	P	375227		2.1	7.4	10
Quad Cities	B	854803		8.6	31	43
Rancho Seco	P	992605		9.4	34	47
River Bend	B	432680	16	5.5	20	27
Robinson	P	738770		5.9	21	30
Salem	P	1979840		27	110	140
San Onofre	P	1284282	9.7	14	52	70
Seabrook	P	523715	2.2	3.5	12	18
Sequoyah	P	769140		6.3	22	32
Sheron Harris	P	688554	3.2	5.3	19	27

Shoreham	B					
South Texas	P	579617	2.8	4.1	14	21
St. Lucie	P	727763	2.4	5.8	21	29
Summer	P	852405	3.4	7.4	26	37
Surry	P	846246		7.3	26	37
Susquehanna	B	2279528	6.9	17	66	85
TMI	P	1928285		26	100	130
Trojan	P	944628		8.7	31	44
Turkey Point	P	345115		1.8	6.6	9.1
Vermont Yankee	B	1286085		11	42	57
Vogtle	P	590283	7.0	4.2	15	21
WNP-2	B	132195	1.5	2.5	10	13
Waterford	P	370569	1.7	2.0	7.3	10
Watts Bar	P	798733		6.7	24	34
Wolf Creek	P	363380	1.6	2.0	7.1	9.9
Yankee Rowe	P	1739663		22	86	110
Zion	P	1107448		11	40	56

[a]P = pressurized-water reactor; B = boiling-water reactor.
[b]MYL = middle year of license.
[c]UCB = upper confidence bound.

Table G.5 Middle year of the license renewal (MYR) normalized total dose (NTD) predictions

Power plant	Reactor type[a]	240-km (150-mile) exposure index	MYL[b] NTD estimate	MYR NTD prediction	Normal theory 95 percent UCB[c]	Distribution free 95 percent UCB
Arkansas	P	265479		18	64	85
Beaver Valley	P	1021547	87	130	480	650
Bellefonte	P	678549		72	250	360
Big Rock Point	B	136942		39	160	200
Braidwood	P	1615088	53	270	1000	1300
Browns Ferry	B	491751		91	330	440
Brunswick	B	256923		59	220	290
Byron	P	1214624	64	170	630	840
Callaway	P	373564	35	29	100	140
Calvert Cliffs	P	1459323		230	840	1100
Catawba	P	914688	50	110	400	550
Clinton	B	1418383	110	180	670	880
Commanche Peak	P	363530	17	28	100	140
Cooper	B	428471		83	300	400
Crystal River	P	573211		56	200	280
DC Cook	P	1051654		140	500	680
Davis Besse	P	1104797		150	540	730

Diablo Canyon	P	302887		21	77	100
Dresden	B	1193394		160	590	790
Duane Arnold	B	329426		70	260	340
Farley	P	344405		26	93	130
Fermi 2	B	1287935	160	170	620	830
Fitzpatrick	B	270532		61	230	300
Fort Calhoun	P	242370		15	57	74
Ginna	P	357773		27	98	130
Grand Gulf	B	388245	26	78	280	380
Haddam Neck	P	1722399		290	1100	1400
Hatch	B	347873		72	270	350
Hope Creek	B	1955878	300	220	850	1100
Indian Point	P	2863844		630	2600	3200
Indian Point 2			3800			
Indian Point 3						
Kewanee	P	440217		38	130	180
La Salle	B	1396350		180	660	870
Limerick	B	2647224	410	270	1100	1400
Maine Yankee	P	391929		32	110	150
McGuire	P	890305		110	380	530
Millstone 3	P	1510698	290	240	890	1200
Monticello	B	487606		90	330	440
Nine Mile Point	B	273322	90	62	230	300
North Anna	P	876587		110	370	520
Oconee	P	867675		100	370	510
Oyster Creek	B	1970098		230	860	1100
Palisades	P	1041961		140	490	670
Palo Verde	P	290395	18	20	73	97
Peach Bottom	B	1453860		190	680	900
Perry	B	1021049	130	150	530	710
Pilgrim	B	486154		90	330	440
Point Beach	P	469985		41	150	200
Prarie Island	P	375227		30	100	140
Quad Cities	B	854803		130	470	630
Rancho Seco	P	992605		130	450	620
River Bend	B	432680	240	84	300	400
Robinson	P	738770		82	290	400
Salem	P	1979840		360	1400	1800
San Onofre	P	1284282	110	190	690	910
Seabrook	P	523715	31	49	170	240
Sequoyah	P	769140		87	310	430
Sheron Harris	P	688554	41	74	260	360
Shoreham	B					
South Texas	P	579617	66	57	200	280
St. Lucie	P	727763	29	80	280	390

Summer	P	852405	47	100	360	500
Surry	P	846246		100	350	490
Susquehanna	B	2279528	110	250	960	1200
TMI	P	1928285		350	1300	1700
Trojan	P	944628		120	420	580
Turkey Point	P	345115		26	93	130
Vermont Yankee	B	1286085		170	620	830
Vogtle	P	590283	91	59	200	290
WNP-2	B	132195	23	38	160	200
Waterford	P	370569	20	29	100	140
Watts Bar	P	798733		92	320	450
Wolf Creek	P	363380	29	28	100	140
Yankee Rowe	P	1739663		300	1100	1500
Zion	P	1107448		150	540	730

[a]P = pressurized-water reactor; B = boiling-water reactor.
[b]MYL = middle year of license.
[c]UCB = upper confidence bound.

Table G.6 Middle year of the license renewal (MYR) normalized expected cost (NEC) predictions

Power plant	Reactor type[a]	240-km (150-mile) exposure index	MYL[b] NEC NLF[c] estimate	MYR NEC prediction	Normal theory 95 percent UCB[d]	Distribution free 95 percent UCB
Arkansas	P	265479		850	3600	4700
Beaver Valley	P	1021547	11000	4900	21000	27000
Bellefonte	P	678549		2900	12000	16000
Big Rock Point	B	136942		1300	6500	8100
Braidwood	P	1615088	4100	8900	41000	51000
Browns Ferry	B	491751		3000	12000	16000
Brunswick	B	256923		2000	8800	11000
Byron	P	1214624	2500	6200	27000	34000
Callaway	P	373564	1200	1300	5400	7400
Calvert Cliffs	P	1459323		7800	35000	44000
Catawba	P	914688	2100	4300	18000	23000
Clinton	B	1418383	2300	5800	24000	31000
Commanche Peak	P	363530	1100	1300	5300	7100
Cooper	B	428471		2700	11000	15000
Crystal River	P	573211		2300	9300	13000
DC Cook	P	1051654		5100	22000	28000
Davis Besse	P	1104797		5400	23000	30000
Diablo Canyon	P	302887		1000	4200	5500
Dresden	B	1193394		5200	22000	28000
Duane Arnold	B	329426		2300	9900	13000
Farley	P	344405		1200	4900	6600
Fermi 2	B	1287935	7000	5400	23000	30000

Fitzpatrick	B	270532		2100	9000	11000
Fort Calhoun	P	242370		760	3300	4200
Ginna	P	357773		1300	5200	6900
Grand Gulf	B	388245	780	2600	11000	14000
Haddam Neck	P	1722399		9700	45000	56000
Hatch	B	347873		2400	10000	13000
Hope Creek	B	1955878	12000	7000	31000	39000
Indian Point	P	2863844		19000	100000	120000
Indian Point 2						
Indian Point 3						
Kewanee	P	440217		1600	6600	9300
La Salle	B	1396350		5700	24000	31000
Limerick	B	2647224	19000	8500	39000	48000
Maine Yankee	P	391929		1400	5800	7900
McGuire	P	890305		4100	17000	23000
Millstone 3	P	1510698	23000	8200	37000	46000
Monticello	B	487606		3000	12000	16000
Nine Mile Point	B	273322	2400	2100	9000	11000
North Anna	P	876587		4000	17000	22000
Oconee	P	867675		4000	16000	22000
Oyster Creek	B	1970098		7100	31000	39000
Palisades	P	1041961		5000	21000	28000
Palo Verde	P	290395	590	960	4000	5200
Peach Bottom	B	1453860		5800	25000	32000
Perry	B	1021049	2000	4700	20000	26000
Pilgrim	B	486154		3000	12000	16000
Point Beach	P	469985		1800	7200	10000
Prarie Island	P	375227		1300	5500	7400
Quad Cities	B	854803		4200	17000	23000
Rancho Seco	P	992605		4700	20000	26000
River Bend	B	432680	17000	2800	12000	15000
Robinson	P	738770		3200	13000	18000
Salem	P	1979840		12000	56000	69000
San Onofre	P	1284282	5600	6600	29000	37000
Seabrook	P	523715	1700	2100	8300	12000
Sequoyah	P	769140		3400	14000	19000
Sheron Harris	P	688554	1400	2900	12000	17000
Shoreham	B					
South Texas	P	579617	680	2400	9500	14000
St. Lucie	P	727763	1600	3200	13000	18000
Summer	P	852405	1700	3900	16000	21000
Surry	P	846246		3800	16000	21000
Susquehanna	B	2279528	2700	7700	35000	43000
TMI	P	1928285		11000	54000	66000
Trojan	P	944628		4400	18000	24000

Turkey Point	P	345115		1200	4900	6600
Vermont Yankee	B	1286085		5400	23000	30000
Vogtle	P	590283	4700	2400	9700	14000
WNP-2	B	132195	780	1300	6400	7900
Waterford	P	370569	1300	1300	5400	7300
Watts Bar	P	798733		3600	15000	20000
Wolf Creek	P	363380	1100	1300	5300	7100
Yankee Rowe	P	1739663		9800	46000	57000
Zion	P	1107448		5500	23000	30000

[a]P = pressurized-water reactor; B = boiling-water reactor.
[b]MYL = middle year of license.
[c]NLF = normalized latent fatality.
[d]UCB = upper confidence bound.

G.2 Endnotes

[**Prev** | **Next** | **Top of file**]

Current evidence indicates that, for BWRs, the type of containment may significantly influence the public risk compared with PWR containments, and the degree of influence may vary between the different BWR containment types. This variation of risk influence among containment types does not seem to be as prevalent for PWR containments.

G.3 References

[**Prev** | **Next** | **Top of file**]

Butler, R., and E. D. Rothman, "Predictive Intervals Based on Reuse of the Sample," *Journal of the American Statistical Association*, **75**, 881-89, 1980.

Draper, N., and H. Smith, *Applied Regression Analysis, Second Addition*, Wiley, New York, 1981.

Huber, P. J., *Robust Statistics*, Wiley, New York, 1981.

Schmoyer, R. L., "Asymptotically Valid Prediction Intervals for Linear Models," *Technometrics* (submitted), 1990.

Stine, R. A., "Bootstrap Prediction Intervals for Regression," *Journal of the American Statistical Association* **80**, 1026-31, 1985.

Tingle, A., *CRAC2S-MACCS Comparison of Exposure Index Calculations*, Brookhaven National Laboratory, Upton, N.Y., February 1993.

Appendix H : Environmental Statutes and RegulationsAffecting License Renewal Activities

[**Prev** | **Next** | **Top of file**]

H.1 Introduction

[**Prev** | **Next** | **Top of file**]

This appendix summarizes the statutes and executive orders that may affect license renewal applications for nuclear power plants. The summary builds on the information in Section 2.3, "Plant Interaction With the Environment," and addresses the following topics: land use, water use, water quality, air quality, aquatic resources, terrestrial resources, radiological impacts, solid waste, chemical impacts, and socioeconomic factors.

The federal and state statutes and the executive orders presented in this part include

(1)statutes and executive orders that could require the Nuclear Regulatory Commission (NRC) or the applicant to undergo a *new* authorization or consultation process with federal or state agencies outside the NRC; or

(2)statutes and executive orders that could require the NRC or the applicant to *renew* authorizations currently granted or hold additional consultations with federal or state agencies outside the NRC.

This summary is provided as a general overview to assist the applicant in identifying environmental and natural resources laws that may affect the license renewal process. The summary is not intended as a complete and final list, and the applicant is reminded that a variety of additional local and regional requirements may exist for the specific plant site.

H.2 Federal Statutes And Executive Orders

[**Prev** | **Next** | **Top of file**]

H.2.1 Land Use

Coastal Zone Management Act of 1972, as amended, Title 16 U.S.C. 1451, et seq.

Congress enacted the *Coastal Zone Management Act* (CZMA) in 1972 to address the increasing pressures of over-development upon the nation's coastal resources. The National Oceanic and Atmospheric Administration administers the Act. The CZMA encourages states to preserve, protect, develop, and, where possible, restore or enhance valuable natural coastal resources such as wetlands, floodplains, estuaries, beaches, dunes, barrier islands, and coral reefs, as well as the fish and wildlife using those habitats. Participation by states is voluntary. To encourage states to participate, the CZMA makes federal financial assistance available to any coastal state or territory, including those on the Great Lakes, that is willing to develop and implement a comprehensive coastal management program.

H.2.2 Water Use

Water use law is dominated by state regulation rather than federal regulation.

H.2.3 Water Quality

(a)Clean Water Act, as amended, Title 33 U.S.C. 1251, et seq.

The *Clean Water Act* (CWA), formerly known as the Federal Water Pollution Control Act, is intended to "¼ restore and maintain the chemical, physical, and biological integrity of the Nation's water" (Section 101). The CWA has five elements: (1) a system of minimum national effluent standards for each industry, (2) water quality standards, (3) a discharge permit program that translates these standards into enforceable limits, (4) provisions for special problems such as toxic chemicals and oil spills, and (5) a revolving construction loan program (formerly a grant program) for publicly-owned treatment works.

The CWA requires the Environmental Protection Agency (EPA) to establish effluent limitations for the amounts of specific pollutants that may be discharged by municipal sewage plants and industrial facilities. The two-step approach to setting the standards includes (1) establishing a nationwide base-level treatment through an assessment of what is technologically and economically achievable for a particular industry and (2) requiring more stringent levels of treatment for specific plants if necessary to achieve water quality objectives for the particular body of water into which

that plant discharges. For example, EPA sets limits based on water quality to control pollution in waters designated by the states for drinking, swimming, or fishing.

The primary method by which the CWA imposes limitations on pollutant discharges is the nationwide permit program established under Section 402 and referred to as the National Pollutant Discharge Elimination System (NPDES). Under the NPDES program, any person responsible for the discharge of a pollutant or pollutants into any waters of the United States from any point source must apply for and obtain a permit.

Section 502(6) of the CWA defines the term *pollutant* to include radioactive materials. In its implementing regulations (40 CFR 122 in particular), however, EPA refined the definition *of pollutant* to exclude radioactive materials regulated under the Atomic Energy Act of 1954 (AEA), as amended. Thus, although the CWA and its implementing regulations clearly apply to naturally occurring (e.g., radium) and accelerator-produced radioisotopes, they do not apply to source, byproduct, or special nuclear materials as defined by the AEA.

Note that, quite apart from the CWA, states may under certain circumstances exercise a limited role in the regulation of these materials. Until Section 274 was added to the AEA in 1959, states had no role in the licensing and regulation of source, byproduct, or special nuclear materials. Section 274, however, provided a statutory basis by which states could assume from NRC a measure of authority over the regulation of byproduct and source materials and special nuclear materials in quantities not sufficient to form a critical mass. To effect this transfer of authority, (1) NRC must find that the state's radiation control program is compatible with NRC's and that it is adequate to protect public health and safety, (2) the state must establish its authority to enter into an agreement with NRC, and (3) NRC must enter into an agreement with the governor of the state desiring such authority. Thus far, 29 states have entered into such agreements with NRC. Even in agreement states, however, NRC retains regulatory authority over several important areas, including construction and operation of production and utilization facilities and disposal of certain source, byproduct, and special nuclear materials [AEA, Section 274(c)].

Section 404 enables the Corps of Engineers in the Department of the Army to issue permits for the discharge of dredged or fill materials into waters of the United States at specific sites. The Corps specifies a site by applying guidelines promulgated by EPA (40 CFR 230). Further, any proposal to dump dredged or fill material into the ocean must comply with the dumping criteria set forth in Section 227.13 of the Marine Protection, Research, and Sanctuaries Act (MPRSA) regulations. Under Subsection 404(c) of the CWA, EPA can prohibit (or limit the use of) a proposed disposal site or withdraw an already designated site, under regulations codified at 40 CFR 231. This determination may occur if EPA foresees unacceptable impacts on municipal water supplies, shellfish beds, fishery areas, or wildlife and recreational areas. However, such a determination must be made after consultation with the Corps and the permit applicant.

A significant feature of Section 404 is that the Corps may issue general permits on a state, regional, or nationwide basis for dredging or fill activities that are similar in nature and cause only minimal individual and cumulative adverse impacts. General permits are granted for a period not to exceed 5 years. The Corps issues individual permits for actions that have a potential for significant environmental impacts.

(b)Marine Protection, Research, and Sanctuaries Act of 1972, Title 16 U.S.C. 1431, et seq.

The MPRSA (Pub.L. 92-532) regulates ocean dumping of waste, provides for a research program on ocean dumping, and provides for the designation and regulation of marine sanctuaries. Also known as the Ocean Dumping Act, the Act regulates the ocean dumping of all material beyond the territorial limit or 3 miles from shore and prevents or strictly limits dumping material that "would adversely affect human health, welfare, or amenities, or the marine environment, ecological systems, or economic potentialities." "Material" includes (but is not limited to) dredged material, solid waste, incinerator residue, garbage, sewage, sewage sludge, munitions, chemical and biological warfare agents, radioactive materials, chemicals, biological and laboratory waste, wrecked or discarded equipment, rock, sand, excavation debris, and industrial, municipal, agricultural, and other waste. The term does not include sewage from

vessels or oil, unless the oil is transported via a vessel or aircraft for the purpose of dumping. Disposal by means of a pipe, regardless of how far at sea the discharge occurs, is regulated by the CWA, through the NPDES permit process.

Some of the waste material as defined above may be transported to and dumped into the ocean under conditions stipulated in a permit issued by EPA or the Corps of Engineers, depending upon the type of waste involved. Ocean dumping, however, is only possible if no other reasonable alternatives, such as landfilling, are available.

(c)Safe Drinking Water Act, as amended, Title 42 U.S.C. 300 F., et seq.

In 1974 Congress enacted the *Safe Drinking Water Act* (SDWA) to manage potential contamination threats to groundwater. The act instructed EPA to establish a national program to prevent underground injections that would endanger drinking water sources. Primary drinking water standards promulgated under the SDWA apply to drinking water "at the tap" as delivered by public water supply systems.

Section 1447 of the SDWA states that each federal agency having jurisdiction over a federally owned or maintained public water system must comply with all federal, state, and local requirements, administrative authorities, and processes and sanctions regarding the provision of safe drinking water. Sections 1412, 1414, and 1445(a) of the SDWA provide drinking water regulations and specific operating procedures for public water systems.

Public water systems, as defined in 40 CFR 141.2, provide piped water for human consumption and have at least 15 connections or regularly serve at least 25 people. Public water systems are either

(1)community water systems, that is, public water systems that serve at least 15 connections used by year-round residents or regularly serve at least 25 year-round residents; or

(2)non-community water systems, all other water systems (e.g., campgrounds and gas stations).

On July 8, 1987 (FR 52, 25690), EPA amended 40 CFR 141.2 to add a definition of a "non-transient non-community water system" as a public water system that is *not* a community water system but that regularly serves at least the same 25 people for 6 months per year (e.g., work places and hospitals).

The SDWA requires EPA to establish primary water regulations for contaminants that may cause adverse public health effects. The regulations include both mandatory levels (maximum contaminant levels) and nonenforceable health goals [maximum contaminant level goals (MCLGs)] for each included contaminant.

MCLGs have extra significance because they can be used under the *Comprehensive Environmental Response, Compensation, and Liability Act* (CERCLA) as amended by the *Superfund Amendments and Reauthorization Act* (SARA) as applicable or relevant and appropriate requirements in national priorities list cleanups.

H.2.4 Air Quality

Clean Air Act, as amended, Title 42 U.S.C. 7401, et seq.

On November 15, 1990, President Bush signed into law sweeping revisions of the *Clean Air Act* (CAA). The new law contains titles that

- strengthen measures for attaining air quality standards (Title 1),
- set forth provisions relating to mobile sources (Title II),
- expand the regulation of hazardous air pollutants (Title III),
- require substantial reductions in power plant emissions for control of acid rain (Title IV),
- establish operating permits for all major sources of air pollution (Title V),
- establish provisions for stratospheric ozone protection (Title VI), and
- expand enforcement powers and penalties (Title VII).

The CAA Amendments will have far-reaching effects not only on environmental activities at federal facilities, but also on procurement, maintenance, and motor vehicle operation activities.

The original 1970 CAA authorized EPA to establish National Ambient Air Quality Standards (NAAQS) to limit levels of pollutants in the air. EPA has promulgated NAAQS for six criteria pollutants: sulfur dioxide, nitrogen dioxide, carbon monoxide (CO), ozone, lead, and particulate matter. All areas of the United States must maintain ambient levels of these pollutants below the ceilings established by the NAAQS; any area that does not meet these standards is a "nonattainment" area (NAA).

The 1990 Amendments require that the boundaries of serious, severe, or extreme ozone or CO NAAs located within metropolitan statistical areas (MSAs) or consolidated metropolitan statistical areas (CMSAs) be expanded to include the entire MSA or CMSA unless the governor makes certain findings and the administrator of EPA concurs. Consequently, all urban counties included in an affected MSA or CMSA, regardless of their attainment status, will become part of the NAA.

Under previous law "major sources" were those with the potential to emit more than 100 tons per year (tpy). The CAA Amendments reduced the size of plants subject to permitting and stringent retrofitting or offsetting requirements. In *serious* ozone NAAs, "major sources" include those with the potential to emit more than 50 tpy of volatile organic compounds. In *severe* ozone NAAs, "major sources" include those that emit 25 tpy or, in extreme areas, 10 tpy. For serious CO NAAs, a "major source" is now one that emits 50 tpy. For serious particulate matter NAAs, a "major source" is now one that emits 70 tpy.

The new source performance standards (NSPS) set minimum nationwide emission limitations for classes of facilities. The NSPS are set at levels that reflect the degree of control achievable through the application of the best system of continuous emission reduction that has been adequately demonstrated for that category of sources. The NSPS must take into consideration the cost of achieving such emissions reductions and any non-air-quality health and environmental impacts and energy requirements.

The National Emissions Standards for Hazardous Air Pollutants aim to control pollutants that may reasonably be anticipated to result in either an increase in mortality or an increase in serious irreversible or incapacitating, but reversible, illness. Since 1970 EPA has listed only eight hazardous air pollutants and has established standards for only seven. The 1990 Amendments directed EPA to establish technology-based standards for 189 hazardous substances based on the use of "maximum achievable control technology."

Title V of the CAA Amendments established a federal permitting program, similar to the CWA permitting program, which is to be administered by the states. Title V declared that after the effective date of any approved or promulgated permit program, it will be unlawful to operate a major source, affected source, or any other source (including an area source) subject to regulation under the CAA unless the source complies with all air quality requirements and has an operating permit. Under previous federal law, construction permits were required only for new sources; existing sources were left largely unpermitted, unless the state elected to require an operating permit. The CAA Amendments eliminated the distinction between new and existing sources; all major sources are now required to have an operating permit.

The new permit program will be fee-based, and federal facilities are explicitly required to pay a fee or charge imposed by a state or local agency to defray the costs of its air pollution regulatory program. The statute sets minimum rates for such fees at $25 per ton of each regulated pollutant, up to 4000 tpy. The EPA administrator may set other amounts to adequately reflect reasonable costs of the permit program. The following sources must have a permit to operate:

- major hazardous air pollutant sources,
- major sources under NAAQS,
- all affected sources under Title IV, and

- all sources subject to NSPS.

H.2.5 Aquatic Resources

(a)Fish and Wildlife Coordination Act, as amended, Title 16 U.S.C. 661-664, et seq.

The *Fish and Wildlife Coordination Act* (FWCA), as amended, proposes to ensure that fish and wildlife resources receive equal consideration with other values during the planning of water resources development projects. The act was passed because the goals of water-related projects (e.g., flood control, irrigation, navigation, and hydroelectric power) may conflict with the goal of conserving fish and wildlife resources. Conversely, developers can design water development projects to enhance the quality and enjoyment of fish and wildlife resources if such goals are incorporated into project plans.

The act authorizes the Secretary of the Department of the Interior (DOI) to provide assistance to and cooperate with federal, state, and public or private agencies and organizations in the development and protection of wildlife resources and habitat; make surveys and investigations of the wildlife in the public domain; and accept donations of land and funds that will further the purposes of the act.

The act requires consultation with the head of the state agency that administers wildlife resources in the affected state. The purpose of this process is to promote conservation of wildlife resources by preventing loss of and damage to such resources and to provide for the development and improvement of wildlife resources in connection with the agency action.

Although the recommendations of the Secretary of the Interior and state officials are not binding, the federal agency must give them full consideration. Furthermore, any reports and recommendations made by those officials become an integral part of any report prepared by the responsible federal agency when seeking authorization for the water-resource development project. Such a report must also include an estimate of the wildlife benefits or losses to be derived from the proposed project and a description of the conservation measures the agency finds should be adopted to obtain maximum overall project benefits.

The FWCA authorizes federal agencies to acquire lands in connection with water development projects for use in activities designed to conserve and enhance wildlife resources. These activities should be conducted in accordance with plans approved by the federal agency, the Secretary of the Interior, and the head of the applicable state agency. The report that accompanies the authorization request should describe the probable extent of land acquisition.

In other conservation provisions the FWCA authorizes the Secretary of DOI [through the Fish and Wildlife Service (FWS) and the Bureau of Mines] to investigate and report to Congress on the effects of domestic sewage; mine, petroleum, and industrial wastes; erosion silt; and other pollutants on wildlife and to make recommendations for alleviating their effects. It also directs the Corps of Engineers to consider fish and wildlife resource and habitat in its management of water levels in the upper Mississippi River.

Two general types of activities exempt from the act are (1) water impoundments with a surface area of less than 4 ha (10 acres) and (2) programs for land management and use carried out by federal agencies on land under their jurisdiction.

(b)Fish and Wildlife Conservation Act of 1980, Title 16 U.S.C. 2901, et seq.

The *Fish and Wildlife Conservation Act* provides federal technical and financial assistance to states for the development of conservation plans and programs for nongame fish and wildlife. The act also encourages federal agencies to conserve and promote the conservation of nongame fish and wildlife and their habitats. Conservation plans are required to identify appropriate nongame fish and wildlife species and significant problems that may adversely affect these species and their habitats. The conservation plan must also determine the actions that should be taken to

conserve the nongame fish and wildlife species. The designated state agencies are expected to consult with the appropriate federal agencies during the development, revision, and implementation of the plan.

H.2.6 Terrestrial Resources

Endangered Species Act of 1973, as amended, Title 16 U.S.C. 1531, et seq.

The *Endangered Species Act* (ESA) originally passed in 1973. It provides for the designation and protection of invertebrates, wildlife, fish, and plant species that are in danger of becoming extinct and conserves the ecosystems on which such species depend.

The act defines an endangered species as any species that is in danger of becoming extinct throughout all or a significant portion of its range (the act excludes recognized insect pests from this definition). A threatened species is one that is likely to become endangered in the foreseeable future. The act makes it illegal for any individual to kill, collect, remove, harass, import, or export an endangered or threatened species without a permit from the Secretary of DOI. DOI's FWS performs most administrative and regulatory actions under the act. The National Marine Fisheries Service in the U.S. Department of Commerce deals with actions affecting marine species.

To be protected, a species must be listed by the Secretary of the Interior as endangered or threatened. The listing process generally begins with a petition to the Secretary. Consultation with affected states is required prior to listing, but the Secretary makes the final decision. Whenever possible, a designation of critical habitat accompanies the listing of an endangered or threatened species. The Secretary must publish and periodically update the lists and develop and implement "recovery plans" for the conservation and survival of endangered and threatened species. Recently, the American bald eagle has been removed from the list because of FWS recovery plans.

The act directs the Secretaries of Interior and Commerce to establish programs to conserve fish, wildlife, and plants, including endangered and threatened species. Also, the Department of Agriculture oversees the import and export of endangered and threatened species. Implementation of such programs usually includes acquisition of lands under the act itself and under the FWCA of 1958, as amended; the *Fish and Wildlife Act* of 1956, as amended; and the *Migratory Bird Conservation Act* of 1929, as amended.

The act mandates cooperation between the U.S. federal, state, and foreign governments. The Secretary of the Interior must cooperate with the states to acquire and manage land and has authority to enter into cooperative agreements to provide assistance to those states that establish programs for the conservation of endangered and threatened species. The President and the Secretary of the Interior may provide financial and technical assistance to foreign countries to encourage conservation of fish, wildlife, and plants. The Secretaries of the Interior and Commerce must also carry out obligations under two international agreements: the *Convention on International Trade in Endangered Species of Wild Fauna and Flora* and the *Convention on Nature Protection and Wildlife Preservation in the Western Hemisphere*.

All federal agencies must utilize their authorities to carry out programs for the conservation of endangered and threatened species. Regulations promulgated under Section 7 of the act define the process whereby proposed federal actions that may affect threatened or endangered species are approved, disapproved, and appealed. In particular, "Each Federal agency shall, in consultation with and with the assistance of the Secretary [of DOI], ensure that any action authorized, funded, or carried out by such agency ¼ is not likely to jeopardize the continued existence of any endangered species or threatened species or result in the destruction or adverse modification of habitat of such species which is determined by the Secretary ¼ to be critical ¼ [Endangered Species Act Section 7(a)(2)]."

H.2.7 Radiological Impacts

Occupational Safety and Health Act

The Occupational Safety and Health Administration (OSHA) of the Department of Labor is responsible for the implementation of the *Occupational and Safety Health Act*. The act establishes safe and healthful workplace standards.

Employers who fail to comply with OSHA standards can be penalized by the federal government. The act allows states to develop and enforce OSHA standards if such programs have been approved by the Secretary of Labor.

H.2.8 Solid Waste

Resource Conservation and Recovery Act of 1976, as amended, Title 42 U.S.C. 6901, et seq.

In 1976 Congress remodeled the *Solid Waste Disposal Act*, which dealt with the disposal of nonhazardous waste, into a major new program on hazardous waste. The *Resource Conservation and Recovery Act* (RCRA) outlines the framework for national programs to achieve environmentally sound management of both hazardous and nonhazardous wastes. RCRA also promotes resource recovery techniques and methods to reduce the generation of waste. The *Hazardous and Solid Waste Amendments* of 1984 (HSWA) both expanded the scope of RCRA and increased the level of detail in many of its provisions.

RCRA, as amended, contains ten subtitles. Subtitle C, "Hazardous Waste Management"; Subtitle D, "State and Regional Solid Waste Plans"; Subtitle I, "Regulation of Underground Storage Tanks"; and Subtitle J, "Demonstration Medical Waste Tracking Program," constitute the regulatory portion of the law. The other subtitles provide the legal and administrative structure for achieving the objectives of the law.

EPA, the Department of Commerce, the Department of Energy, and DOI all have specific responsibilities under RCRA. EPA issues guidelines and regulations for proper management of solid wastes, oversees and approves the development of state waste management plans, and provides financial aid to agencies and firms performing research on solid waste. The Department of Commerce encourages greater commercialization of proven resource recovery technologies. The Department of Energy oversees activities involving research and development of new techniques for producing energy from wastes. DOI oversees mineral waste problems, including recovery of metals and minerals and methods for stabilizing mining wastes.

Generators of hazardous waste must notify EPA that the wastes exist and require management in compliance with RCRA. Proper identification and initial management of hazardous wastes promote the success of the "cradle-to-grave" program. Generators must determine if the wastes are hazardous. If so, they notify EPA that they are managing a hazardous waste; obtain an EPA identification number for the generating facility; and verify that the transportation, treatment, storage, and disposal of the waste is conducted only by others with EPA numbers.

Generators must also prepare a Uniform Hazardous Waste Manifest to accompany shipments of hazardous waste. The manifest includes the name and EPA identification number of persons authorized to manage the waste and serves as a document of accountability to prevent improper disposal. The manifest system promotes self-enforcement of RCRA's requirements.

Under RCRA, no material can be a hazardous waste without first being a solid waste. RCRA defines a *solid waste as* "¼ any garbage, refuse, sludge from a waste treatment plant, water supply treatment plant, or air pollution control facility and other discarded material, including solid, liquid, semisolid, or contained gaseous material resulting from industrial, commercial or mining and agricultural operations, and from community activities ¼ [excluding] ¼ solid or dissolved materials in domestic sewage, or solid or dissolved materials in irrigation return flows, or industrial discharges which are point sources subject to permits under Section 402 of the Federal Water Pollution Control Act ¼ . or source, special nuclear, or byproduct material as defined by the Atomic Energy Act [AEA] of 1954 ¼ [Section 1004 (27)]."

RCRA then defines a *hazardous waste* as "a solid waste, or combination of solid wastes, which because of its quantity, concentration, or physical, chemical, or infectious characteristics may ¼ cause, or significantly contribute to an increase in mortality or an increase in serious irreversible, or incapacitating reversible, illness; or ¼ pose a substantial present or potential hazard to human health or the environment when improperly treated, stored, transported, or disposed of, or otherwise managed [Section 1004(5)]."

The 1984 HSWA addressed Congressional concern that inadequate or improper controls for management of hazardous waste would increase risks to human health and the environment. HSWA introduced three major changes in RCRA.

First, Congress restricted land disposal of untreated hazardous waste unless it could be demonstrated that there will be no migration of hazardous constituents from the disposal unit for as long as the wastes remain hazardous [Section 3004 (d)(1)]. Second, facilities were required to adopt "minimum technical requirements" for landfills and surface impoundments to keep hazardous constituents from migrating into groundwater and to permit detection if migration occurs. Third, EPA was granted the authority to require corrective action for releases of hazardous constituents from any solid waste disposal unit at a facility seeking a RCRA

Subtitle I (implemented at 40 CFR Part 280), added by HSWA, established a program to regulate the three to five million underground storage tanks in the United States and to prevent their leaking. Under this subtitle RCRA regulates the storage of a product (e.g., petroleum products), rather than hazardous waste. In addition the substances regulated under Subtitle I include all the hazardous substances (except those regulated as a hazardous waste under Subtitle C of RCRA) defined under CERCLA. *Hazardous substances* under CERCLA encompass a wide variety of items regulated under other federal statutes including the CWA, CAA, and *Toxic Substances Control Act* (TSCA). (Radionuclides, which are specifically excluded under RCRA's definition of *solid waste,* are regulated under CERCLA because they are defined as *hazardous air pollutants* under the CAA.) Subtitle I of RCRA regulates underground storage tanks containing radioactive materials unless they are "mixed" with hazardous waste, in which case they are regulated under Subtitle C.

Federal agencies and departments that own or operate underground storage tanks are subject to and must comply with all applicable federal, state, interstate, and local requirements, except when the President determines that exemption of specific tanks from these requirements is in the "paramount" interest of the United States.

Section 3006 of RCRA authorizes states to develop and enforce their own hazardous waste programs in place of the federal program administered by EPA. Before administering any of the provisions of HSWA, authorized states must again go through the state program approval process.

H.2.9 Chemical Impurities

Federal Insecticide, Fungicide, and Rodenticide Act, as amended, Title 7 U.S.C. 135, et seq.

The *Federal Insecticide, Fungicide, and Rodenticide Act* as amended by the Federal Environmental Pesticide Control Act and subsequent amendments, requires the registration of all new pesticides with EPA before they are used in the United States. Manufacturers are required to develop toxicity data for their pesticide products. Toxicity data may be used to determine permissible discharge concentrations for an NPDES permit.

H.2.10 Socioeconomic Factors

Historic Preservation Requirements

Five laws, one executive order, and a Presidential memorandum have been passed during the last 75 years to help protect and preserve the nation's archaeological and historic resources.

The Antiquities Act of 1906 provided for the protection of historic and prehistoric remains and monuments on federal lands. It established a permit system for conducting scientific archaeological investigations, which could only be conducted by recognized institutions that would report results and maintain all collections for the public.

In 1935 Congress passed the *Historic Sites Act* that declared it was a national policy "to preserve for public use historic sites, buildings, and objects of national significance." This act extended protection to sites on both federal and non-federal lands by giving the Secretary of the Interior the authority to survey, document, evaluate, acquire, and preserve archaeological and historical sites throughout the country. It led to the creation of the Historic Sites Surveys, the

Historic American Buildings Survey, and the Historic American Engineering Record (now the National Architectural and Engineering Record).

The Archaeological Recovery Act of 1960 gave DOI the major responsibility for preserving archaeological data that might be lost through federal dam construction. The *Archaeological and Historic Preservation Act* of 1974 amended and significantly expanded the scope of the 1960 Act by requiring preservation of archaeological data affected as a result of any federal or federally related land modification activities.

The act made the Secretary of the Interior responsible for coordinating and administering a nationwide program for the recovery, protection, and preservation of scientific, prehistoric, historic, and archaeological data that would otherwise be damaged or destroyed through federal action. This act, also referred to as the *Archaeological Salvage Act* or the *Moss-Bennett Act*, for the first time authorized up to 1 percent of the cost of a project to be transferred to the Secretary of the Interior for preserving archaeological data on federal construction projects, other than dam construction. The 1 percent limitation can be waived by federal agencies after obtaining concurrence from DOI and then notifying Congress.

The most comprehensive national policy on historic preservation was established by Congress with the passage of the *National Historic Preservation Act* of 1966 (NHPA). In this act historic preservation was defined to include "the protection, rehabilitation, restoration and reconstruction of districts, sites, buildings, structures, and objects significant in American history, architecture, archaeology, or culture." The act led to the creation of the National Register of Historic Places, a file of cultural resources of national, regional, state, and local significance. The act also established the Advisory Council on Historic Preservation (the Council), an independent federal agency responsible for administering the protective provisions of the act.

Two of the major provisions of the NHPA for federal agencies are Sections 106 and I 10. Both sections aim to ensure that historic properties are appropriately considered in planning federal initiatives and actions. Section 106 is a specific, issue-related mandate to which federal agencies must adhere. It is a reactive mechanism that is driven by a federal action. Section I 10, in contrast, sets out broad federal agency responsibilities with respect to historic properties. It is a proactive mechanism with emphasis on ongoing management of historic preservation sites and activities at federal facilities.

Section 106 requires that the head of any federal agency having direct or indirect jurisdiction over a proposed federal or federally assisted undertaking in any state, and the head of any federal department or independent agency having authority to license any such undertaking, must ensure that the provisions of the NHPA are administered. Section 106 also mandates consultation during such federal actions. It compels federal agencies to "take into account" the effect of their projects on historical and archaeological resources and to give the Council the opportunity to comment on such effects.

Section 110(a) of the NHPA and Executive Order (E.O.) 11593 (which was substantially incorporated into the NHPA amendments of 1980) require agencies to provide leadership in preserving, restoring, and maintaining the historic and cultural environment of the nation. The 1980 NHPA amendments expanded the NHPA of 1966 by making federal agencies responsible for identifying, preserving, and nominating to DOI all sites, buildings, districts, and objects under their jurisdiction or control that appear to qualify for listing on the National Register of Historic Places. It also required DOI to develop criteria and procedures for federal agencies to use in these reviews and nominations. As a result, both Section 110(a) and E.O. 11593 require each federal agency, in cooperation with the state historic preservation officer in the state involved, to "establish a program to locate, inventory, and nominate to the Secretary (DOI) all properties under the agency's ownership or control by the agency, that appear to qualify for inclusion on the National Register in accordance with the regulations promulgated under Section 101(a)(2)(A)."

Amendments to NHPA in 1980 also provided additional guidance and clarification to the historic preservation program. Congress gave DOI the authority to waive the 1-percent limitation on the use of project funds to defray the costs of data

recovery, increased the role of the state historic preservation officer in the administration of the National Historic Preservation Program, and clarified federal agency responsibilities under E.O. 11593.

The *Archaeological Resources Protection Act of 1979* was enacted to provide a comprehensive framework for protecting and regulating the use of archaeological resources on public and Indian lands protected by the *Antiquities Act* of 1906. The act requires that a permit be received from the federal land manager for the excavation and removal of archaeological resources on public land.

The President's 1978 *Memorandum on Environmental Quality and Water Resources Management* directed the Council to issue final regulations under the NHPA and directed federal agencies with water resource responsibilities and programs to publish procedures implementing the NHPA within 3 months after promulgation of the final Council regulations.

Federal agencies should coordinate National Environmental Policy Act (NEPA) compliance with the responsibilities of the NHPA to ensure that historic and cultural properties are given proper consideration in the preparation of environmental assessments (EAs) and environmental impact statements (EISs). However, agency obligations under NHPA are independent from NEPA and must be complied with even when an EA or EIS is not required. That is, for proposed projects that are not classified as major federal actions with significant environmental impacts, federal agencies must still consider impacts to historic properties and sites. Where both NEPA and the NHPA are applicable, draft EISs must integrate NHPA considerations along with other environmental impact analyses and studies. (See 40 CFR Part 1502.25.)

To coordinate the independent responsibilities of the two acts (NEPA and NHPA), federal agencies should undertake compliance with NHPA regulations as soon as it is determined that a National Register listed or eligible property may be affected by a proposed project or program.

H.2.11 Other

(a) Emergency Planning and Community Right-to-Know Act of 1986, Title 42 U.S.C. I 1001, et seq.

The *Emergency Planning and Community Right-to-Know Act* (EPCRA), enacted on October 17, 1986, represents a significant first step toward a major federal role in areas previously regulated by state and local government. EPCRA was enacted by Congress as a stand-alone provision, Title III, of SARA.

Title III was passed in response to concerns regarding the environmental and safety hazards posed by the storage and handling of toxic chemicals. The disaster in Bhopal, India, in which more than 2000 people suffered death or serious injury from the accidental release of methyl isocyanate, triggered this concern. To reduce the likelihood of such a disaster in the United States, Congress imposed requirements on both states and regulated facilities. Facilities must notify the local emergency planning districts regarding materials and releases at sites.

The emergency planning aspect requires local communities to prepare plans to deal with emergencies relating to hazardous substances. The community right-to-know aspect creates new rights for members of the public and local governments to obtain information concerning potential threats in their neighborhoods involving hazardous substances. EPCRA provides the tools for local governments and members of the community to make their own decisions regarding hazardous materials in their communities.

EPCRA contains three subtitles. Subtitle A, "Emergency Planning and Notification," establishes mechanisms to enable states and communities to prepare to respond to unplanned releases of hazardous substances.

Subtitle B, "Reporting Requirements," contains three distinct reporting provisions concerning two different groups of chemical substances. The first two sets of reports require submission of inventory-related data on *hazardous chemicals* (i.e., those substances for which a material safety data sheet is mandated under the hazard communication regulations of OSHA). The third reporting provision requires annual reports to the EPA and to the state in which the reporting

facility is located of environmental releases of listed *toxic chemicals* manufactured, processed, or otherwise used at the facility in excess of specified threshold quantities.

Subtitle C, "General Provision," contains a variety of general provisions, including, but not limited to, civil, criminal, and administrative penalties for violations of the statute's reporting requirements; enforcement actions that can be brought by citizens, states, and emergency planning and response entities; and restrictions on an owner's or operator's rights to make trade secrecy claims in the reports required by EPCRA.

(b) National Electric Safety Code

The *National Electric Safety Code* provides a comprehensive listing of criteria regarding electrical safety.

(c) Executive Order 11990, Protection of Wetlands

Executive Order 11990 was issued to avoid direct or indirect support of new construction on wetlands wherever there is a practicable alternative. Federal agencies are required to evaluate the potential effects of any actions they may take on wetlands when carrying out their responsibilities (e.g., planning, regulating, and licensing activities). However, this executive order does not apply to the issuance by federal agencies of permits, licenses, or allocations to private parties for activities involving wetlands on nonfederal property.

(d) Pollution Prevention Act of 1990

This legislation focuses on treating and disposing of waste rather than on meeting source reduction limits. The millions of tons of pollution generated each year could be reduced in a cost-effective manner through changes in production, operation, and types of raw materials used in industry. The technique of source reduction is considered fundamentally different from and more desirable than waste management and pollution control. EPA is to carry out the responsibilities set forth in this act.

(e) The Bald and Golden Eagle Protection Act

The *Bald and Golden Eagle Protection Act* prohibits knowingly (or with disregard for the consequences of one's actions) taking, possessing, selling, transporting, importing, or exporting the American or golden eagle, dead or alive, without a permit.

(f) The American Indian Religious Freedom Act

The *American Indian Religious Freedom Act* (AIRFA) clarifies U.S. policy pertaining to the protection of Native Americans' religious freedom. The special nature of Native American religions has frequently resulted in conflicts between federal laws and policies and religious freedom. Some federal laws, such as those protecting wilderness areas or endangered species, have inadvertently given rise to problems such as denial of access to sacred sites or prohibitions on possession of animal-derived sacred objects by Native Americans.

AIRFA, passed in 1978, acknowledged prior infringement on the right of freedom of religion for Native Americans. Furthermore, it stated in a clear, comprehensive, and consistent fashion the federal policy that laws passed for other purposes were not meant to restrict the rights of Native Americans. The act established a policy of protecting and preserving the inherent right of individual Native Americans (including American Indians, Eskimos, Aleuts, and Native Hawaiians) to believe, express, and exercise their traditional religions.

AIRFA is primarily a policy statement. Approximately half of the brief statute is devoted to Congressional findings. Following the Congressional findings, the act makes a general policy statement regarding American Indian religious freedom: "¼ henceforth it shall be the policy of the United States to protect and preserve for American Indians their inherent right to freedom to believe, express, and exercise the traditional religions of the American Indian, Eskimo,

Aleut, and Native Hawaiians, including but not limited to access to sites, use and possession of sacred objects, and the freedom to worship through ceremonial and traditional rites (42 U.S.C. 1996)."

The final section of the act requires the President to order agencies to review their policies and procedures in consultation with traditional native religious leaders.

(g) Native American Graves Protection and Repatriation Act

The *Native American Graves Protection and Repatriation Act*, enacted on November 16, 1990, established a means for American Indians, including members of Indian tribes, Native Hawaiian organizations, and Native Alaskan villages and corporations, to request the return or "repatriation" of human remains and other cultural items presently held by federal agencies or federally assisted museums or institutions.

The act also contains provisions regarding the intentional excavation and removal of, inadvertent discovery of, and illegal trafficking in Native American human remains and cultural items.

All federal agencies that manage land and/or are responsible for archaeological collections from their lands or generated by their activities must comply with the Native American Graves Protection and Repatriation Act.

(h) Marine Mammal Protection Act

The *Marine Mammal Protection Act* (MMPA) was enacted in 1972 to protect and manage marine mammals and their products (e.g., the use of hides and meat). The primary authority for implementing the act belongs to the FWS and National Marine Fisheries Service. The FWS manages walruses, polar bears, sea otters, dugongs, marine otters, and West Indian, Amazonian, and West African manatees. The National Marine Fisheries Service manages whales, porpoises, seals, and sea lions. The two agencies may issue permits under MMPA Section 104 (16 U.S.C. 1374) to persons, including federal agencies, that authorize the taking or importing of specific species of marine mammals.

After the Secretary of the Interior or the Secretary of Commerce approves a state's program, the state can take over responsibility for managing one or more marine mammals. Regulations governing the transfer of responsibility were published in May 1983. Although certain states actively participate in the management of marine mammals, as of August 9, 1994, no state has fully taken on this duty.

The MMPA established a Marine Mammal Commission whose duties include reviewing laws and international conventions relating to marine mammals, studying the condition of these mammals, and recommending steps to federal officials (e.g., listing a species as endangered) that should be taken to protect marine mammals. Federal agencies are directed by MMPA Section 205 (16 U.S.C. 1405) to cooperate with the commission by permitting it to use their facilities or services.

(i) Executive Order 11988, Floodplain Management

Executive Order 11988 was issued to avoid direct or indirect support of floodplain development whenever there is a practicable alternative. A federal agency is required to evaluate the potential effects of any actions it may take in a floodplain. Federal agencies are also required to encourage and provide appropriate guidance to applicants to evaluate the effects of their proposals on floodplains prior to submitting applications for federal licenses, permits, loans, or grants.

(j)Low-Level Radioactive Waste Policy Act, Title 42 U.S.C. 2021b, et seq.

The *Low-Level Radioactive Waste Policy Act* is designed to improve the procedures for the implementation of compacts providing for the establishment and operation of regional low-level radioactive waste disposal facilities. It also allows for Congress to grant consent for certain interstate compacts. The amended act sets forth the responsibilities for disposal of low-level waste by states or interstate compacts. The act states the amount of waste that certain low-

level waste recipients can receive over a set time period. The amount of low-level radioactive waste generated from both pressurized and boiling water reactor types is allocated over a transition period until a local waste facility is operational.

(k)Nuclear Waste Policy Act of 1982, Title 42 U.S.C. 10101, et seq.

The *Nuclear Waste Policy Act of 1982* provides for the research and development of repositories for the disposal of high-level radioactive waste, spent nuclear fuel, and low-level radioactive waste. The act consists of three titles and several subtitles. Title I includes the provisions for the disposal and storage of high-level radioactive waste and spent nuclear fuel. Subtitle A of Title I delineates the requirements for site characterization and construction of the repository and the participation of states and other local governments in the selection process. Subtitles B,C, and D of Title I deal with the specific issues for interim storage, monitored retrievable storage, and low-level radioactive waste.

(l)Toxic Substances Control Act

Congress enacted TSCA in 1976, to become effective January 1, 1977. The act authorizes EPA to secure information on all new and existing chemical substances and to control any of these substances determined to cause an unreasonable risk to public health or the environment.

Under earlier laws EPA had authority to control toxic substances only after damage occurred. The earlier laws did not require the screening of toxic substances before they entered the marketplace. TSCA closed the gap in the earlier laws by requiring that the health and environmental effects of all new chemicals be reviewed before they are manufactured for commercial purposes.

Determinations regarding compliance with TSCA must be made on a case-by-case basis if an activity involves the manufacture, processing, distribution in commerce, use, and/or disposal of a new or existing chemical substance or mixture that may present an unreasonable risk of injury to health or the environment. Although the definition of "chemical substances" explicitly excludes from its scope several materials that might otherwise meet the definition, including those that are regulated under other federal statues, TSCA is potentially applicable to all "chemical substances" and "mixtures" that are manufactured, imported, processed, used, distributed, and/or disposed of in the United States. By definition, TSCA-regulated chemical substances and mixtures do not include "¼ any source material, special nuclear material, or byproduct material (as such terms are defined in the Atomic Energy Act of 1954 and regulations issued under such Act) ¼ ." [TSCA, Section 3(2)(B)(iv)]. Although TSCA excludes nuclear material, the TSCA-regulated portion of a mixed nuclear and regulated waste must comply with TSCA requirements. Materials that are not chemical substances or mixtures are not subject to the various requirements of TSCA.

The TSCA program is run by EPA and is not delegated to any state agency.

(m) National Environmental Policy Act

NEPA of 1969 as implemented by E.O. 11514 and E.O. 11991 established national policies and goals for the protection of the environment. NEPA aims to encourage harmony between people and the environment, to promote efforts to prevent or eliminate damage to the environment and the biosphere, and to enrich the understanding of ecological systems and natural resources important to the country.

NEPA is divided into two titles. Title I outlines a basic national charter for protection of the environment. Title II establishes the Council on Environmental Quality (CEQ). CEQ monitors the progress made toward achieving the goals set forth in Section 101 of NEPA. CEQ's duties include advising the president on environmental issues and providing guidance to other federal agencies on compliance with NEPA. Accordingly, CEQ promulgated regulations (amended in 1986) governing the NEPA process for all federal agencies.

Section 102(2) of NEPA contains "action-forcing" provisions that ensure federal agencies act according to the letter and the spirit of the law. These procedural requirements direct all federal agencies to give appropriate consideration to

the environmental effects of their decision making and to prepare detailed environmental statements on recommendations or reports on proposals for legislation and other major federal actions significantly affecting the quality of the environment.

Agencies must establish specific criteria for classes of action that (1) usually require an EIS, (2) normally require an EA but do not necessarily require an EIS, and (3) require neither an EA nor an EIS (the "categorical exclusions").

If the action requires an EIS, the agency must publish a notice of intent and begin the scoping process. Then the agency prepares the draft EIS, solicits comments from affected parties and various governmental entities, and drafts the final EIS after considering the comments received. The contents of the final EIS must be considered when making a decision on the proposed action. The agency must prepare a record of decision, a concise statement of its decision discussing its choice among alternatives and the means that will be employed to mitigate or minimize environmental harm.

If the agency action does not fall within the category of actions designated as categorical exclusions or as requiring an EIS, the agency must prepare an EA. The EA determines whether an EIS is needed. If the EA determines that an EIS is not needed, the agency must issue a finding of no significant impact that briefly explains why the agency's action will not have a significant impact on the environment.

Although NEPA requires agencies to take what is known as a "hard look" at the environmental consequences of their actions, it does not force them to take the most environmentally sound alterative.

(n) Comprehensive Environmental Response, Compensation, and Liability Act

Congress passed CERCLA of 1980, also known as "Superfund" in response to a growing national concern about the release of hazardous substances to the environment. SARA, signed by President Reagan on October 17, 1986, amended many provisions of CERCLA. SARA has been the only major revision of CERCLA since its enactment in 1980.

CERCLA provides for liability, compensation, cleanup, and emergency response for hazardous substances released into the environment and for the cleanup of inactive hazardous waste disposal sites. CERCLA [Section 101 (14)] defines *hazardous substances* as

(A) any substance designated pursuant to Section 311(b)(2)(A) of the Federal Water Pollution Control Act, (B) any element, compound, mixture, solution, or substance designated pursuant to Section 102 of this act, (C) any hazardous waste having the characteristics identified under or listed pursuant to Section 3001 of the Solid Waste Disposal Act (but not including any waste the regulation of which under the Solid Waste Disposal Act has been suspended by act of Congress), (D) any toxic pollutant listed under Section 307(a) of the Federal Water Pollution Control Act, (E) any hazardous air pollutant listed under Section 112 of the Clean Air Act, and (F) any imminently hazardous chemical substance or mixture with respect to which the Administrator has taken action pursuant to Section 7 of the Toxic Substances Control Act.

Releases of source, byproduct, or special nuclear material from a nuclear incident are excluded from CERCLA requirements if the releases are subject to the financial protection requirements of the AEA. Releases of source, special nuclear, or byproduct materials from a processing site designated by the *Uranium Mill Tailings Radiation Control Act* of 1978 are also excluded [CERCLA Section 101(22)].

CERCLA intends to provide for response to, and cleanup of, environmental problems that are not covered adequately by the permit programs of the many other environmental laws, including the CAA, CWA, SDWA, MPRSA, RCRA, and AEA. In general, if a release to the environment constitutes a "federally permitted release," as defined by Section 101(10) of CERCLA, the release is not subject to CERCLA reporting requirements. However, if the release exceeds the permitted limit for a specific substance by the reportable quantity of that substance or more, results from startup or shutdown of a process, or occurs more frequently than the permit stipulates, it is subject to CERCLA reporting

requirements. Future regulations may exempt federally permitted facilities and continuous-release facilities on a case-by-case basis. Permits do not cover abandoned waste disposal sites, and these sites are clearly subject to CERCLA.

CERCLA, as amended by SARA, provides for a fund, called the Superfund, that EPA or state and local governments can use to pay for the cleanup of hazardous waste sites listed on the national priorities list (NPL). The NPL, compiled by EPA, lists those sites, including federally owned facilities, that appear to pose the most serious threats to public health or the environment. EPA determines whether to place a site on the NPL by using the hazard ranking system (HRS).

Under the HRS, pertinent data about a site are evaluated and "scored." A site may receive scores for items such as waste volume, waste toxicity, proximity to population, and distance to underground drinking water. The cleanup of sites must conform to EPA's National Contingency Plan, the operating rules for Superfund cleanups promulgated by EPA under Section 105(a)(8)(B) of CERCLA. The NPL is dynamic. As HRS studies are performed, releases and waste sites may be removed from or added to the list. As of May 31, 1994, the NPL included 1,286 final sites (150 in the federal section) and 54 proposed sites (six of which are federal sites).

If liability for the release of a hazardous substance can be firmly established, the liable or "potentially responsible party" must pay for the cost of remedial responses. Generally, funds from the Superfund do not go toward paying for the cleanup of releases from federally owned facilities [Section 111(e)(3)] except to provide alternative water supplies in cases involving groundwater contamination outside the boundaries of a federally owned facility if the federally owned facility is not the only potentially responsible party.

Under Section 120 of CERCLA, each department, agency, and instrumentality of the United States is subject to, and must comply with, CERCLA in the same manner as any nongovernmental entity (except for requirements for bonding, insurance, financial responsibility, or applicable time period).

The Superfund process includes the following steps:

Preliminary assessment--EPA performs a preliminary assessment of a site (often a review of data without an actual site visit) to determine if further study is necessary.

Site inspection--A site inspection is an on-site investigation conducted to find out whether there is a release or potential release and to determine the nature of the associated threats.

Remedial investigation--A remedial investigation, conducted by the lead agency, determines the nature and extent of the problem presented by the release.

Feasibility study--The lead agency undertakes a feasibility study to develop and evaluate options for remedial action. The remedial investigation and feasibility study are collectively referred to as the "RI/FS."

Record of decision--After completing the RI/FS, EPA selects the appropriate cleanup option and publishes it in a public document known as the record of decision.

Remedial design--The remedial design includes the technical analysis and procedures that follow the selection of a remedy for a site.

Remedial action--The remedial action involves the actual construction or implementation of a cleanup.

In general the proposed remedy for a site must meet two threshold criteria: (1) to protect human health and the environment and (2) to comply with "applicable or relevant and appropriate requirements". Federal and/or state requirements are considered "applicable" if they are "¼ based upon an objective determination of whether the

requirement specifically addresses a hazardous substance, pollutant, contaminant, remedial action, location, or other circumstance found at a CERCLA site" [40 CFR Part 300 (9)(1)].

CERCLA, if not reauthorized by Congress, will expire in 1995. Referred to as the Superfund Reform Act of 1994 (The Act), HR-3800 and S-1834 have emerged as the primary amending statutes on Superfund law. The major features of these bills are intended to enhance EPA's information-gathering activities; sharply limit joint and several liability as it applies to de minimis parties; limit the liability of lenders; create more flexibility within the remedy selection process; and increase opportunities for public participation in the decision-making process and incorporate environmental justice concerns within the CERCLA process. This list is not exhaustive; however, it gives a general overview of the scope of CERCLA reform.

Appendix I: NRC Procedures for the Submission of Petitions for Rulemaking

[**Prev** | **Top of file**]

This appendix contains NRC's procedural requirements for the submission of petitions for rulemaking. Individuals seeking a change to the findings in Appendix B (Table B-1) of Subpart A of 10 CFR Part 51 should follow these procedures. Petitions for rulemaking may be filed at any time.

10 CFR § 2.802 Petition for Rulemaking

(a) Any interested person may petition the Commission to issue, amend or rescind any regulation. The petition should be addressed to the Secretary, U.S. Nuclear Regulatory Commission, Washington, DC 20555, Attention: Chief, Docketing and Service Branch.

(b) A prospective petitioner may consult with the NRC before filing a petition for rulemaking by writing the Director, Freedom of Information and Publications Services, Office of Administration, U.S. Nuclear Regulatory Commission, Washington, DC 20555, Attention: Chief, Rules Review and Directives Branch. A prospective petitioner may also telephone the Rules Review and Directives Branch on (301)415-7158 or toll free on (800) 368-5642.

(1) In any consultation prior to the filing of a petition for rulemaking, the assistance that may be provided by the NRC staff is limited to-

(i) Describing the procedure and process for filing and responding to a petition for rulemaking;

(ii) Clarifying an existing NRC regulation and the basis for the regulation; and

(iii) Assisting the prospective petitioner to clarify a potential petition so that the Commission is able to understand the nature of the issues of concern to the petitioner.

(2) In any consultation prior to the filing of a petition for rulemaking, in providing the assistance permitted in paragraph (b)(1) of this section, the NRC staff will not draft or develop text or alternative approaches to address matters in the prospective petition for rulemaking.

(c) Each petition filed under this section shall:

(1) Set forth a general solution to the problem or the substance or text of any proposed regulation or amendment, or specify the regulation which is to be revoked or amended;

(2) State clearly and concisely the petitioner's grounds for and interest in the action requested;

(3) Include a statement in support of the petition which shall set forth the specific issues involved, the petitioner's views or arguments with respect to those issues, relevant technical, scientific or other data involved which is reasonably

available to the petitioner, and such other pertinent information as the petitioner deems necessary to support the action sought. In support of its petition, petitioner should note any specific cases of which petitioner is aware where the current rule is unduly burdensome, deficient, or needs to be strengthened.

(d) The petitioner may request the Commission to suspend all or any part of any licensing proceeding to which the petitioner is a party pending disposition of the petition for rulemaking.

(e) If it is determined that the petition includes the information required by paragraph (c) of this section and is complete, the Director, Division of Freedom of Information and Publications Services, or designee, will assign a docket number to the petition, will cause the petition to be formally docketed, and will deposit a copy of the docketed petition in the Commission's Public Document Room. Public comment may be requested by publication of a notice of the docketing of the petition in the FEDERAL REGISTER, or, in appropriate cases, may be invited for the first time upon publication in the FEDERAL REGISTER of a proposed rule developed in response to the petition. Publication will be limited by the requirements of section 181 of the Atomic Energy Act of 1954, as amended, and may be limited by order of the Commission.

(f) If it is determined by the Executive Director for Operations that the petition does not include the information required by paragraph (c) of this section and is incomplete, the petitioner will be notified of that determination and the respects in which the petition is deficient and will be accorded an opportunity to submit additional data. Ordinarily this determination will be made within 30 days from the date of receipt of the petition by the Office of the Secretary of the Commission. If the petitioner does not submit additional data to correct the deficiency within 90 days from the date of notification to the petitioner that the petition is incomplete, the petition may be returned to the petitioner without prejudice to the right of the petitioner to file a new petition.

(g) The Director, Division of Freedom of Information and Publications Services, Office of Administration, will prepare on a semiannual basis a summary of petitions for rulemaking before the Commission, including the status of each petition. A copy of the report will be available for public inspection and copying for a fee in the Commission's Public Document Room, 2120 L Street, NW., Washington, DC.

[**Top of file**]

Page Last Reviewed/Updated Sunday, March 13, 2011

©2000- 2011 NRC

United States Nuclear Regulatory Commission

Protecting People and the Environment

NUREG-1437, Volume 2
Revision 1

Generic Environmental Impact Statement for License Renewal of Nuclear Plants

Appendices

Draft Report for Comment

Office of Nuclear Reactor Regulation

AVAILABILITY OF REFERENCE MATERIALS IN NRC PUBLICATIONS

NRC Reference Material

As of November 1999, you may electronically access NUREG-series publications and other NRC records at NRC's Public Electronic Reading Room at http://www.nrc.gov/reading-rm.html.
Publicly released records include, to name a few, NUREG-series publications; *Federal Register* notices; applicant, licensee, and vendor documents and correspondence; NRC correspondence and internal memoranda; bulletins and information notices; inspection and investigative reports; licensee event reports; and Commission papers and their attachments.

NRC publications in the NUREG series, NRC regulations, and *Title 10, Energy*, in the Code of *Federal Regulations* may also be purchased from one of these two sources.

1. The Superintendent of Documents
   U.S. Government Printing Office
   Mail Stop SSOP
   Washington, DC 20402–0001
   Internet: bookstore.gpo.gov
   Telephone: 202-512-1800
   Fax: 202-512-2250
2. The National Technical Information Service
   Springfield, VA 22161–0002
   www.ntis.gov
   1–800–553–6847 or, locally, 703–605–6000

A single copy of each NRC draft report for comment is available free, to the extent of supply, upon written request as follows:
Address: U.S. Nuclear Regulatory Commission
Office of Administration
Mail, Distribution and Messenger Team
Washington, DC 20555-0001
E-mail: DISTRIBUTION@nrc.gov
Facsimile: 301–415–2289

Some publications in the NUREG series that are posted at NRC's Web site address http://www.nrc.gov/reading-rm/doc-collections/nuregs are updated periodically and may differ from the last printed version. Although references to material found on a Web site bear the date the material was accessed, the material available on the date cited may subsequently be removed from the site.

Non-NRC Reference Material

Documents available from public and special technical libraries include all open literature items, such as books, journal articles, and transactions, *Federal Register* notices, Federal and State legislation, and congressional reports. Such documents as theses, dissertations, foreign reports and translations, and non-NRC conference proceedings may be purchased from their sponsoring organization.

Copies of industry codes and standards used in a substantive manner in the NRC regulatory process are maintained at—
The NRC Technical Library
Two White Flint North
11545 Rockville Pike
Rockville, MD 20852–2738

These standards are available in the library for reference use by the public. Codes and standards are usually copyrighted and may be purchased from the originating organization or, if they are American National Standards, from—
American National Standards Institute
11 West 42nd Street
New York, NY 10036–8002
www.ansi.org
212–642–4900

Legally binding regulatory requirements are stated only in laws; NRC regulations; licenses, including technical specifications; or orders, not in NUREG-series publications. The views expressed in contractor-prepared publications in this series are not necessarily those of the NRC.

The NUREG series comprises (1) technical and administrative reports and books prepared by the staff (NUREG–XXXX) or agency contractors (NUREG/CR–XXXX), (2) proceedings of conferences (NUREG/CP–XXXX), (3) reports resulting from international agreements (NUREG/IA–XXXX), (4) brochures (NUREG/BR–XXXX), and (5) compilations of legal decisions and orders of the Commission and Atomic and Safety Licensing Boards and of Directors' decisions under Section 2.206 of NRC's regulations (NUREG–0750).

United States Nuclear Regulatory Commission

Protecting People and the Environment

NUREG-1437, Volume 2
Revision 1

Generic Environmental Impact Statement for License Renewal of Nuclear Plants

Appendices

Draft Report for Comment

Manuscript Completed: June 2009
Date Published: July 2009

Office of Nuclear Reactor Regulation

Cover Sheet

Responsible Agency: U.S. Nuclear Regulatory Commission, Office of Nuclear Reactor Regulation

Title: *Draft Generic Environmental Impact Statement for License Renewal of Nuclear Plants* (NUREG-1437) Volumes 1 and 2, Revision 1

For additional information or copies of this draft GEIS, contact:

Jennifer Davis
Office of Nuclear Reactor Regulation
Mail Stop O-11F1
11555 Rockville Pike
Rockville, Maryland 20852
Phone: 1-800-368-5642, extension 3835
Fax: (301) 415-2002
Email: LRGEISUpdate@nrc.gov

To submit comments:

Chief, Rules Review and Directives Branch
U.S. Nuclear Regulatory Commission
Mail Stop TWB-05-B01
Washington, DC 20555-0001

Electronic comments may be submitted to the NRC by e-mail at LRGEISUpdate@nrc.gov
Fax: (301) 415-2002

Abstract

U.S. Nuclear Regulatory Commission (NRC) regulations allow for the renewal of commercial nuclear power plant operating licenses, depending on the outcome of an assessment to determine whether the nuclear plant can continue to operate safely and protect the environment during the 20-year period of extended operation. Renewal of a nuclear power plant operating license requires the preparation of an environmental impact statement (EIS). To support the preparation of these EISs, the NRC published the *Generic Environmental Impact Statement for License Renewal of Nuclear Plants* (GEIS) in 1996. The proposed action considered in the GEIS is the renewal of nuclear power plant operating licenses.

The NRC committed to review and revise the GEIS on a 10-year cycle, if necessary. Since publication of the GEIS, approximately 30 plant sites (50 reactor units) have applied for license renewal and undergone environmental reviews, the results of which were published as supplements to the 1996 GEIS. This GEIS revision reviews and reevaluates the issues and findings of the 1996 GEIS. Lessons learned and knowledge gained during previous license renewal reviews provides a significant source of new information for this assessment. In addition, new research, findings, and other information were considered in evaluating the significance of impacts associated with license renewal.

The intent of the GEIS is to determine which issues would result in the same impact at all nuclear power plants, and which issues could result in different levels of impact at different plants and thus require a plant-specific analysis for impact determinations. The GEIS is intended to improve the efficiency of the license renewal process by (1) providing an evaluation of the types of environmental impacts that may occur as a result of renewing the license of a nuclear power plant, (2) identifying and assessing the impacts that are expected to be generic (the same or similar), and (3) defining the number and scope of impacts that need to be addressed in plant-specific EISs. The GEIS revision identifies 78 environmental impact issues for consideration in plant-specific supplements to the GEIS.

In addition to the impacts of continued operations and refurbishment, the GEIS evaluates other consequences of license renewal, including the environmental effects of postulated accidents and the effects of an additional 20 years of operation on the impacts of shutdown and decommissioning and on the uranium fuel cycle. The GEIS evaluates a full range of alternatives to the proposed action, including a no-action alternative (denial of license renewal), fossil energy alternatives, nuclear energy alternatives, renewable energy alternatives, conservation (demand-side management), and the purchase of power. For most impact areas, the proposed action would have impacts that would be similar to or less than impacts of the alternatives, in large part because most alternatives would require new power plant construction, whereas the proposed action would not.

Public Comments: In preparation of this Draft GEIS, NRC considered comments received from the public during the scoping period. Comments received after the close of the scoping comment period have been considered to the extent practicable. Locations and times of public meetings on this document will be announced in the *Federal Register*. Comments on this Draft GEIS will be accepted for a period of 75 days following publication of the Environmental Protection Agency's Notice of Availability in the *Federal Register* and will be considered in the preparation of the Final GEIS. Any comments received after the 75-day period will be considered to the extent practicable for the preparation of the Final GEIS.

Paperwork Reduction Act Statement

This NUREG contains information collection requirements that are subject to the Paperwork Reduction Act of 1995 (44 U.S.C. 3501 et seq.). These information collections were approved by the Office of Management and Budget, approval numbers 3150-0021.

Public Protection Notification

The NRC may not conduct or sponsor, and a person is not required to respond to, a request for information or an information collection requirement unless the requesting document displays a currently valid OMB control number.

Contents

Abstract/Cover Sheet iii
List of Figures ix
List of Tables xiii
Abbreviations and Acronyms xv
Abbreviated Power Plant Names xxiii
Units of Measure xxv
Conversions xxix

Appendix A Comments Received on the Environmental Review A-1

A.1 Public Scoping A-1
A.1.1 Comments and Responses A-7
A.1.1.1 Comments in Support of License Renewal and Nuclear Power A-8
A.1.1.2 Comments in Opposition to License Renewal and Nuclear Power A-8
A.1.1.3 Comments Concerning Water Quality, Hydrology, and Use A-11
A.1.1.4 Comments Concerning Ecology: Aquatic Ecology; Terrestrial Ecology; Threatened and Endangered Species A-13
A.1.1.5 Comments Concerning Human Health A-19
A.1.1.6 Comments Concerning Socioeconomics A-32
A.1.1.7 Comments Concerning Historic and Cultural Resources A-35
A.1.1.8 Comments Concerning Alternatives to License Renewal A-36
A.1.1.9 Comments Concerning Postulated Accidents A-42
A.1.1.10 Comments Concerning the Uranium Fuel Cycle and Waste Management A-48
A.1.1.11 Comments Concerning Decommissioning A-62
A.1.1.12 Comments Concerning the License Renewal Process A-63
A.1.1.13 Comments Concerning Issues Outside the Scope of License Renewal: Safety and Security; Emergency Preparedness; Economics and Need for Power; Aging Management; Potential Allegations; and Other A-82

Appendix B Comparison of Environmental Issues in the GEIS Revision to Issues in Table B-1 of 10 CFR Part 51 ..... B-1

Appendix C General Characteristics and Environmental Settings of Domestic Nuclear Power Plants C-1

Appendix D Technical Basis for GEIS Analysis D-1

D.1 Land Use and Visual Resources D-1
D.1.1 Description of Affected Resources and Region of Influence D-1
D.1.2 Description of Impact Assessment D-1
D.2 Air Quality and Noise D-6
D.2.1 Description of Affected Resources and Region of Influence D-6
D.2.2 Description of Impact Assessment D-6
D.2.2.1 Climatology D-7
D.2.2.2 Air Quality D-7
D.3 Geology and Soils D-26
D.3.1 Description of Affected Resources and Region of Influence D-26
D.3.2 Description of Impact Assessment D-27
D.4 Hydrology D-27
D.4.1 Description of Affected Resources and Region of Influence D-27
D.4.2 Description of Impact Assessment D-27
D.5 Ecological Resources D-28
D.5.1 Description of Affected Resources and Region of Influence D-28
D.5.2 Description of Impact Assessment D-36
D.6 Historic and Cultural Resources D-41
D.6.1 Description of Affected Resources and Region of Influence D-41
D.6.2 Description of Impact Assessment D-41
D.7 Socioeconomics and Environmental Justice D-42
D.7.1 Description of Affected Resources and Region of Influence D-42
D.7.2 Estimation of Direct and Indirect Economic Effects D-43
D.7.3 Environmental Justice Assessment Methods D-45
D.8 Human Health D-47
D.8.1 Radiological Effects D-47
D.8.1.1 Background Information on Radiation D-48
D.8.1.2 Conventional Quantities and Units D-49
D.8.1.3 Biological Effects of Radiation D-51
D.8.1.4 Human Health Effects of Radiation D-52
D.8.1.5 Methodology for Estimating Radiological Impacts D-55
D.8.1.5.1 Methodology for Estimating Worker Doses D-56
D.8.1.5.2 Methodology for Estimating Public Doses D-57
D.8.2 Chemical Hazards D-59
D.8.3 Microbiological Hazards D-59
D.8.4 Electromagnetic Fields D-60

D.8.5 Other Hazards D-60
D.9 Waste Management and Pollution Prevention D-60
D.9.1 Description of Affected Resources and Region of Influence D-60
D.9.2 Description of Impact Assessment D-61
D.10 Alternatives D-62
D.10.1 Identification and Evaluation of Alternative Energy Sources D-62
D.10.2 Supporting Information D-62
D.11 References D-89

Appendix E Environmental Impact of Postulated Accidents E-1

E.1 Introduction E-1
E.2 Plant Accidents E-2
E.3 Accident Risk and Impact Assessment E-4
E.3.1 Impact of New Information on Accidents Initiated by Internal Events .. E-8
E.3.1.1 Airborne Pathway Impacts E-9
E.3.1.2 Other Pathway Impacts E-11
E.3.1.3 Conclusion E-13
E.3.2 Impact of Accidents Initiated by External Events E-13
E.3.2.1 Airborne Pathway Impacts E-14
E.3.2.2 Other Pathway Impacts E-18
E.3.2.3 Conclusion E-20
E.3.3 Impact of New Source Term Information E-22
E.3.3.1 Airborne Pathway Impacts E-22
E.3.3.2 Other Pathway Impacts E-24
E.3.3.3 Conclusion E-25
E.3.4 Impact of Power Uprates E-25
E.3.4.1 Airborne Pathway Impacts E-25
E.3.4.2 Other Pathway Impacts E-26
E.3.4.3 Conclusion E-26
E.3.5 Impact of Higher Fuel Burnup E-27
E.3.5.1 Airborne Pathway Impacts E-27
E.3.5.2 Other Pathway Impacts E-28
E.3.5.3 Conclusion E-28
E.3.6 Impact of Accidents at Low Power and Shutdown Conditions E-29
E.3.6.1 Airborne Pathway Impacts E-30
E.3.6.2 Other Pathway Impacts E-32
E.3.6.3 Conclusion E-32
E.3.7 Impact of Accidents at Spent Fuel Pools E-32
E.3.7.1 Airborne Pathway Impacts E-33
E.3.7.2 Other Pathway Impacts E-36

E.3.7.3 Conclusion E-37
E.3.8 Impact of the Use of BEIR VII Risk Coefficients E-37
E.3.9 Uncertainties E-38
E.3.9.1 Emergency Planning (EP) E-40
E.3.9.2 Population Increase E-40
E.4 Severe Accident Mitigation Alternatives (SAMAs) E-41
E.5 Summary and Conclusion E-43
E.6 References E-46

Appendix F Applicable Laws, Regulations, and Other Requirements F-1

F.1 Introduction F-1
F.2 Background F-2
F.3 Applicable Federal Laws and Regulations F-2
F.4 Applicable Executive Orders F-11
F.5 Applicable U.S. Nuclear Regulatory Commission Regulations F-14
F.6 Applicable State Laws, Regulations and Agreements F-15
F.6.1 State Environmental Requirements F-15
F.6.2 Operating Permits and other Requirements F-18
F.6.3 Cooperating Agencies F-18
F.7 Emergency Management and Response Laws, Regulations, and Executive Orders F-23
F.7.1 Federal Emergency Management Response Laws F-23
F.7.2 Federal Emergency Management and Response Regulations F-25
F.7.3 Emergency Management and Response Executive Orders F-25
F.8 Consultations with Agencies and Federally Recognized American Indian Nations F-26

Figures

D.2-1 Average Annual Maximum Temperatures over the Continental United States (1971–2000) D-8

D.2-2 Average Annual Minimum Temperatures over the Continental United States (1971–2000) D-9

D.2-3 Average Annual Precipitation over the Continental United States (1971–2000) D-10

D.2-4 Percent of Average Monthly Precipitation over the Past 5 Years (September 2002–August 2007) D-11

D.2-5 Map A – Northwest Area NAAQS Attainment Status D-14

D.2-6 Map B – Southwest Area NAAQS Attainment Status D-15

D.2-7 Map C – Midwest Area NAAQS Attainment Status D-16

D.2-8 Map D – South Area NAAQS Attainment Status D-17

D.2-9 Map E – Florida Area NAAQS Attainment Status D-18

D.2-10 Map F – Southeast Area NAAQS Attainment Status D-19

D.2-11 Map G – Northeast Area NAAQS Attainment Status D-20

D.5-1 Level I Ecoregions of the United States D-32

D.10-1 IGCC Coal Power Plant with GE Gasifier Without CO_2 Capture D-63

D.10-2 IGCC Coal Power Plant with GE Gasifier with CO_2 Capture D-64

D.10-3 IGCC Coal Power Plant with Shell Gasifier Without CO_2 Capture D-65

D.10-4 IGCC Coal Power Plant with Shell Gasifier with CO_2 Capture D-66

D.10-5 IGCC Coal Power Plant with Conoco-Phillips Gasifier Without CO_2 Capture D-67

D.10-6 IGCC Coal Power Plant with Conoco-Phillips Gasifier with CO_2 Capture..... D-68

D.10-7 Subcritical Pulverized Coal Power Plant Without CO_2 Capture D-69

D.10-8 Subcritical Pulverized Coal Power Plant with CO_2 Capture D-70

D.10-9 Supercritical Pulverized Coal Power Plant Without CO_2 Capture D-71

D.10-10 Supercritical Pulverized Coal Power Plant with CO_2 Capture D-72

D.10-11 Natural Gas IGCC Power Plant Without CO_2 Capture D-73

D.10-12 Natural Gas IGCC Power Plant with CO_2 Capture D-74

D.10-13 Geothermal Hydrothermal Flashed Steam Power Plant Schematic D-75

D.10-14 Geothermal Hydrothermal Binary Power Plant Schematic D-76

D.10-15 Geothermal Hot Dry Rock Power Plant Schematic D-77

D.10-16 Geothermal Resources in the 48 Contiguous United States D-78

D.10-17 Wind Resources in the 48 Contiguous United States D-79

D.10-18 Wind Resources in Offshore Areas of the 48 Contiguous United States D-80

D.10-19 Biomass Resources in the 48 Contiguous United States D-81

D.10-20 Direct-Fire Biomass Power Plant Schematic D-82

D.10-21 Biomass-Coal Co-Fire Power Plant Schematic D-83

D.10-22 Biomass Gasification Power Plant Schematic D-84

D.10-23 Landfills Currently Enrolled in and Candidate Landfills for Landfill Gas-to-Energy Programs D-85

D.10-24 Solar Thermal Power Trough Power Plant Schematic D-86

D.10-25 Solar Photovoltaic Fixed Flat Plate Power Plant Schematic D-87

D.10-26 Solar Photovoltaic Flat Plate with Concentrating Mirror Power Plant Schematic D-87

D.10-27 Solar Radiation Intensity in the 48 Contiguous United States D-88

Tables

A-1 Individuals Providing Comments During the Scoping Period A-4

B-1 Environmental Issues and Findings in the GEIS Revision, and Related Issues and Findings in Table B-1 of 10 CFR Part 51 ..... B-2

D.1-1 Land Cover within 5 Miles of Operating Nuclear Power Plants D-2

D.2-1 National Ambient Air Quality Standards..... D-12

D.2-2 Summary of Nonattainment Status for Each Operating Commercial Plant . D-21

D.5-1 Level I Ecoregions and Corresponding Level III Ecoregions That Occur in the Vicinity of U.S. Commercial Nuclear Power Plants D-29

D.5-2 Ecoregions in the Vicinity of Operating Nuclear Power Plants D-33

D.5-3 Percent of Area Occupied by Wetland and Deepwater Habitats Within 5 Miles of Operating Nuclear Power Plants D-37

D.7-1 Definition of Local Areas and Regions at 11 Nuclear Plants D-43

D.8-1 Quality Factors and Absorbed Dose Equivalencies..... D-50

D.8-2 Organ Dose Weighting Factors..... D-51

D.8-3 Nominal Probability Coefficients for Stochastic Effects D-52

D.8-4 Estimates of Lifetime Attributable Risk of Incidence and Mortality for All Solid Cancers and for Leukemia in the BEIR VII Report D-54

D.8-5 Comparison of BEIR VII Lifetime Cancer Mortality Estimates with Those from Other Reports..... D-55

E-1 PWR Internal Event (Full Power) Comparison..... E-10

E-2 BWR Internal Event (Full Power) Comparison..... E-11

E-3 Comparisons with Other Risk Information (Full Power Interal Events) E-12

E-4 PWR Internal, Fire, and Seismic Event CDF Comparison (Full Power) E-16

E-5 BWR Internal, Fire, and Seismic Event CDF Comparison (Full Power) E-17

E-6 NUREG-1150 and NUREG/CR-5305 Fire and Seismic CDFs..... E-17

E-7 Catawba and McGuire Results for Internal and External Events..... E-19

E-8 Impacts of Accidents Caused by Fire Events (Surry) E-19

E-9 Impacts of Accidents Caused by Fire Events (Peach Bottom) E-20

E-10 Impacts of Accidents Caused by Fire Events (LaSalle)..... E-21

E-11 Impacts of Accidents Caused by Seismic Events E-21

E-12 NUREG-0773 and NUREG/CR-6295 Large Source Terms (PWRs)..... E-23

E-13 NUREG-0773 and NUREG/CR-6295 Large Source Terms (BWRs)..... E-24

E-14 Changes in LERF for Extended Power Uprates >10 Percent..... E-26

E-15 LOCA Consequences as a Function of Fuel Burnup..... E-28

E-16 Impacts of Low Power and Shutdown Accidents (Grand Gulf)..... E-31

E-17 Impacts of Low Power and Shutdown Accidents (Surry)..... E-31

E-18 Impacts of Accidents at SFPs from NUREG-1738..... E-35

E-19 Summary of Conclusions E-45

F.6-1 State Environmental Requirements F-16

F.6-2 Federal, State, and Local Permits and Other Requirements F-19

Abbreviations and Acronyms

ABWR	advanced boiling water reactor
AC	alternating current
ACS	American Cancer Society
ACRS	Advisory Committee on Reactor Safeguards
ADAMS	Agencywide Documents Access and Management System
AEA	Atomic Energy Act
AGNIR	Advisory Group on Non-ionizing Radiation
ALARA	as low as reasonably achievable
ALI	annual limit on intake
ALWR	advanced light water reactor
ASME	American Society of Mechanical Engineers
BEIR	Biological Effects of Ionizing Radiation (National Research Council Committee)
BLS	U.S. Bureau of Labor Statistics
BPA	Bonneville Power Administration
BWR	boiling water reactor
CAA	Clean Air Act
CADHS	California Department of Health Services
CCS	carbon capture and storage
CCW	coal combustion waste
CDC	Centers for Disease Control and Prevention
CDF	core damage frequency
CEC	Commission for Environmental Cooperation
CEDE	committed effective dose equivalent
CEG	Constellation Energy Group
CEQ	Council on Environmental Quality
CERCLA	Comprehensive Environmental Response Compensation and Liability Act
CF	capacity factor
CFR	*Code of Federal Regulations*
CH_4	methane
CHP	combined heat and power
CO	carbon monoxide
CO_2	carbon dioxide
COL	combined operating license

CSP	concentrating solar power
CWA	Clean Water Act
CZMA	Coastal Zone Management Act
DC	direct current
DDREF	dose and dose rate effectiveness factor
DNC	Dominion Nuclear Connecticut
DOE	U.S. Department of Energy
DOL	U.S. Department of Labor
DSM	demand-side management
EA	environmental assessment
EAB	exclusion area boundary
ECRR	European Committee on Radiation Risk
EEI	Edison Electric Institute
EERE	Energy Efficiency and Renewable Energy
EEZ	Exclusive Economic Zone
EF	enhanced Fujita (scale)
EFH	essential fish habitat
EI	exposure index
EIA	Energy Information Administration
EIML	Environmental Incorporated Midwest Laboratory
EIS	environmental impact statement
EJ	environmental justice
ELF-EMF	extremely low frequency-electromagnetic field
EMF	electromagnetic field
EMF-RAPID	Electric and Magnetic Fields Research and Public Information Dissemination (Program)
EPA	U.S. Environmental Protection Agency
EPAct	Energy Policy Act of 2005
EPCRA	Emergency Planning and Community Right-to-Know Act
EPRI	Electric Power Research Institute
ER	environmental report
ERCOT	Electric Reliability Council of Texas
ERO	Electric Reliability Organization
ESA	Endangered Species Act
ESP	early site permit
F	Fujita (scale)
FAA	Federal Aviation Administration
FCC	Federal Communications Commission

FDOH	Florida Department of Health
FEMA	Federal Emergency Management Agency
FERC	Federal Energy Regulatory Commission
FES	final environmental statement
FGD	flue gas desulfurization
FICN	Federal Interagency Committee on Noise
FIFRA	Federal Insecticide, Fungicide, and Rodenticide Act
FPL	Florida Power & Light Company
FR	*Federal Register*
FRCC	Florida Reliability Coordinating Council
FWS	U.S. Fish and Wildlife Service
GALL	Generic Aging Lessons Learned
GAO	U.S. General Accounting Office (now U.S. Government Accountability Office)
GEIS	generic environmental impact statement
GIS	geographic information system
GNEP	Global Nuclear Energy Partnership
GTCC	greater than Class C
HAP	hazardous air pollutant
HAPC	habitat area of particular concern
HAWT	horizontal axis wind turbine
HCCP	Harvard Center for Cancer Prevention
HDR	hot dry rock
HFC	hydrofluorocarbon
HCFC	hydrochlorofluorocarbon
HHV	higher heating value
HLW	high-level (radioactive) waste
HVAC	heating, ventilation, and air conditioning
IAEA	International Atomic Energy Agency
IARC	International Agency for Research on Cancer
ICRP	International Commission on Radiological Protection
IDPH	Illinois Department of Public Health
IEEE	Institute of Electrical and Electronic Engineers
IGCC	integrated gasification combined cycle
INIRC	International Non-Ionizing Radiation Commission
IPEEE	Individual Plant Examination of External Events
IRPA	International Radiation Protection Association
ISFSI	independent spent fuel storage installation
ISI	in-service inspection

LERF	large early release frequency
LET	linear energy transfer
LLAP	*Legionella*-like amoebal pathogen
LLD	lower limit of detection
LLW	low-level (radioactive) waste
LLRWPA	Low-Level Radioactive Waste Policy Act
LLTF	Lessons Learned Task Force
LLWPAA	Low-Level Radioactive Waste Policy Act Amendments
LOEL	lowest observed effects level
LWR	light water reactor
MACT	maximum achievable control technology
MCAQ	Maricopa County Air Quality Department
MCL	maximum contaminant level
MEI	maximally exposed individual
MMPA	Marine Mammal Protection Act
MMS	Minerals Management Service
MSFCMA	Magnuson-Stevens Fishery Conservation and Management Act
MSW	municipal solid waste
MTBE	methyl tertiary butyl ether
NAAQS	National Ambient Air Quality Standards
NaCl	sodium chloride (salt)
NAICS	North American Industry Classification System
NAGPRA	Native American Graves Protection and Repatriation Act
$NaNO_2$	sodium nitrate
NAS	National Academy of Sciences
NCDC	National Climatic Data Center
NCRP	National Council on Radiation Protection and Measurement
NEI	Nuclear Energy Institute
NEPA	National Environmental Policy Act of 1969
NERC	North American Electric Reliability Corporation
NESC	National Electrical Safety Code
NETL	National Energy Technology Laboratory
NGCC	natural gas combined cycle
NHPA	National Historic Preservation Act of 1966
$(NH_4)SO_4$	ammonium sulfate
NIEHS	National Institute of Environmental Health Sciences
NIH	National Institutes of Health
NJDEP	New Jersey Department of Environmental Protection

NMC	Nuclear Management Company
NMFS	National Marine Fisheries Service
NO	nitrogen oxide
N_2O	nitrous oxide
NO_2	nitrogen dioxide
NOAA	National Oceanic and Atmospheric Administration
NORM	naturally occurring radioactive material
NOS	National Oceanic Service
NO_x	nitrogen oxides
NPCC	Northeast Power Coordinating Council
NPDES	National Pollutant Discharge Elimination System
NRC	U.S. Nuclear Regulatory Commission
NREL	National Renewable Energy Laboratory
NRHP	*National Register of Historic Places*
NRPB	National Radiological Protection Board
NSPS	New Source Performance Standards
NWI	National Waste Initiative; National Wetland Inventory
NWPA	National Waste Policy Act
NYSDEC	New York State Department of Environmental Conservation
NYSDOL	New York State Department of Labor
O_3	ozone
ODCM	Offsite Dose Calculation Manual
OPPD	Omaha Public Power District
OTA	Office of Technology Assessment
OSHA	Occupational Safety and Health Administration
PAH	polycyclic aromatic hydrocarbon
PARS	Publicly Available Record System
Pb	lead
PC	pulverized coal
PCB	polychlorinated biphenyl
PDR	Public Document Room
PEIS	programmatic environmental impact statement
PFC	perfluorinated carbon
PI	performance indicator
PILOT	payments in lieu of tax
$PM_{2.5}$	particulate matter with a mean aerodynamic diameter of 2.5 μm or less
PM_{10}	particulate matter with a mean aerodynamic diameter of 10 μm or less
PPE	personal protective equipment
PSD	prevention of significant deterioration

PTC	production tax credit
PURPA	Public Utility Regulatory Act of 1978
PV	photovoltaic
PWR	pressurized water reactor
RCRA	Resource Conservation and Recovery Act of 1976
RDF	refuse-derived fuel
REMP	Radiological Environmental Monitoring Program
RER	radiological effluent release
RERR	radiological effluent release report
RFC	Reliability First Corporation
ROW	right-of-way
RRC	Regional Reliability Council
RRY	reference reactor year
SAAQS	State Ambient Air Quality Standards
SAMA	severe accident mitigation alternatives
SCE	Southern California Edison
SCR	selective catalytic reduction
SDWA	Safe Drinking Water Act
SEIS	supplemental environmental impact statement
SER	safety evaluation report
SFP	spent fuel pool
SHPO	State Historic Preservation Office or Officer
SIP	State implementation plan
SMITTR	surveillance, monitoring, inspection, testing, trending, and recordkeeping
SO_2	sulfur dioxide
SOARCA	state-of-the-art reactor consequence analysis
SPAR	standardized plant analysis risk
SPDES	State Pollutant Discharge Elimination System
SPP	Southwest Power Pool
SSCs	systems, structures, and components
Stat.	Statutes at Large
TDS	total dissolved solids
TEDE	total effective dose equivalent
TESS	threatened and endangered species system
TLD	thermoluminescence dosimeter
TSCA	Toxic Substances Control Act
TSS	total suspended solids
TTU	Texas Tech University

TVA	Tennessee Valley Authority
TXU	TXU Generation Company
UCB	upper confidence bound
UCS	Union of Concerned Scientists
UF_6	uranium hexafluoride
UNSCEAR	United Nations Scientific Committee on the Effects of Atomic Radiation
UO_2	uranium dioxide
U_3O_8	triuranium octaoxide
USACE	U.S. Army Corps of Engineers
USC	*United States Code*
USCB	U.S. Census Bureau
USDA	U.S. Department of Agriculture
USFWS	U.S. Fish and Wildlife Service
USGS	U.S. Geological Survey
VOC	volatile organic compound
WCGS	Wolf Creek Generating Station
WCNOC	Wolf Creek Nuclear Operating Corporation
WEC	wave energy capture
WHO	World Health Organization

Abbreviated Power Plant Names

Arkansas	Arkansas Nuclear One
Beaver Valley	Beaver Valley Power Station
Braidwood	Braidwood Station
Browns Ferry	Browns Ferry Nuclear Plant
Brunswick	Brunswick Steam Electric Plant
Byron	Byron Station
Callaway	Callaway Plant
Calvert Cliffs	Calvert Cliffs Nuclear Power Plant
Catawba	Catawba Nuclear Station
Clinton	Clinton Power Station
Columbia	Columbia Generating Station
Comanche Peak	Comanche Peak Steam Electric Station
Cooper	Cooper Nuclear Station
Crystal River	Crystal River Nuclear Power Plant
Davis-Besse	Davis-Besse Nuclear Power Station
Diablo Canyon	Diablo Canyon Power Plant
D.C. Cook	Donald C. Cook Nuclear Plant
Dresden	Dresden Nuclear Power Station
Duane Arnold	Duane Arnold Energy Center
Farley	Joseph M. Farley Nuclear Plant
Fermi	Enrico Fermi Atomic Power Plant
FitzPatrick	James A. FitzPatrick Nuclear Power Plant
Fort Calhoun	Fort Calhoun Station
Ginna	R.E. Ginna Nuclear Power Plant
Grand Gulf	Grand Gulf Nuclear Station
Harris	Shearon Harris Nuclear Power Plant
Hatch	Edwin I. Hatch Nuclear Plant
Hope Creek	Hope Creek Generating Station
Indian Point	Indian Point Energy Center
Kewaunee	Kewaunee Power Station
LaSalle	LaSalle County Station
Limerick	Limerick Generating Station

McGuire	McGuire Nuclear Station
Millstone	Millstone Power Station
Monticello	Monticello Nuclear Generating Plant
Nine Mile Point	Nine Mile Point Nuclear Station
North Anna	North Anna Power Station
Oconee	Oconee Nuclear Station
Oyster Creek	Oyster Creek Nuclear Generating Station
Palisades	Palisades Nuclear Plant
Palo Verde	Palo Verde Nuclear Generating Station
Peach Bottom	Peach Bottom Atomic Power Station
Perry	Perry Nuclear Power Plant
Pilgrim	Pilgrim Nuclear Power Station
Point Beach	Point Beach Nuclear Plant
Prairie Island	Prairie Island Nuclear Generating Plant
Quad Cities	Quad Cities Nuclear Power Station
River Bend	River Bend Station
H.B. Robinson	H.B. Robinson Steam Electric Plant
St. Lucie	St. Lucie Nuclear Plant
Salem	Salem Nuclear Generating Station
San Onofre	San Onofre Nuclear Generating Station
Seabrook	Seabrook Station
Sequoyah	Sequoyah Nuclear Plant
South Texas	South Texas Project Electric Generating Station
Summer	Virgil C. Summer Nuclear Station
Surry	Surry Power Station
Susquehanna	Susquehanna Steam Electric Station
Three Mile Island	Three Mile Island, Unit 1
Turkey Point	Turkey Point Nuclear Plant
Vermont Yankee	Vermont Yankee Nuclear Power Station
Vogtle	Vogtle Electric Generating Plant
Waterford	Waterford Steam Electric Station
Watts Bar	Watts Bar Nuclear Plant
Wolf Creek	Wolf Creek Generating Station

Units of Measure

ac	acre(s)
bbl	barrel(s)
Btu	British thermal unit(s)
°C	degree(s) Celsius
cm	centimeter(s)
d	day(s)
dB	decibel(s)
°F	degree(s) Fahrenheit
ft	foot (feet)
ft^2	square foot (feet)
ft^3	cubic foot (feet)
gal	gallon(s)
gpd	gallon(s) per day
gpm	gallon(s) per minute
GWd/MT	gigawatt per day/metric tonne(s)
Gy	gray(s)
ha	hectare(s)
hr	hour(s)
Hz	hertz
in.	inch(es)
kg	kilogram(s)
km	kilometer(s)
kV	kilovolt(s)
kW	kilowatt(s)
kWh	kilowatt-hour(s)
L	liter(s)
lb	pound(s)
m	meter(s)
m^2	square meter(s)

m^3	cubic meter(s)
mA	milliampere(s)
mg	milligram(s)
mG	milligauss
mGy	milligray(s)
MHz	megahertz
mi	mile(s)
min	minute(s)
mL	milliliter(s)
MMBtu	million Btu
MPa	megapascal(s)
mph	mile(s) per hour
mrad	milliard(s)
mrem	millirem(s)
mSv	millisievert(s)
mT	milliTesla(s)
MT	metric tonne(s)
MTHM	metric tonne(s) of heavy metal
MTU	metric tonne(s) of uranium
MW	megawatt(s)
MWe or MW(e)	megawatt(s) electric
MW(t)	megawatt(s) thermal
MWh	megawatt-hour(s)
pCi	picocurie(s)
ppm	part(s) per million
ppmv	parts per million by volume
ppmvd	parts per million by volume, dry
ppt	part(s) per thousand
psi	pound(s) per square inch
rad	radian
rem	roentgen-equivalent-man
s	second(s)
scf	standard cubic foot (feet)
sV	sievert(s)
T	tesla(s)
TPY	ton(s) per year

V	volt(s)
yr	year(s)
μCi	microcurie(s)
μGy	microgray(s)
μm	micrometer(s)
μT	microtesla(s)

Conversions

Multiply	By	To Obtain
To Convert English to Metric Equivalents		
acres	0.4047	hectares (ha)
cubic feet (ft^3)	0.02832	cubic meters (m^3)
cubic yards (yd^3)	0.7646	cubic meters (m^3)
curies (Ci)	3.7×10^{10}	becquerels (Bq)
degrees Fahrenheit (°F) -32	0.5555	degrees Celsius (°C)
feet (ft)	0.3048	meters (m)
gallons (gal)	3.785	liters (L)
gallons (gal)	0.003785	cubic meters (m^3)
inches (in.)	2.540	centimeters (cm)
miles (mi)	1.609	kilometers (km)
pounds (lb)	0.4536	kilograms (kg)
rads	0.01	grays (Gy)
rems	0.01	sieverts (Sv)
short tons (tons)	907.2	kilograms (kg)
short tons (tons)	0.9072	metric tons (t)
square feet (ft^2)	0.09290	square meters (m^2)
square yards (yd^2)	0.8361	square meters (m^2)
square miles (mi^2)	2.590	square kilometers (km^2)
yards (yd)	0.9144	meters (m)
To Convert Metric to English Equivalents		
becquerels (Bq)	2.7×10^{-11}	curies (Ci)
centimeters (cm)	0.3937	inches (in.)
cubic meters (m^3)	35.31	cubic feet (ft^3)
cubic meters (m^3)	1.308	cubic yards (yd^3)
cubic meters (m^3)	264.2	gallons (gal)
degrees Celsius (°C) +17.78	1.8	degrees Fahrenheit (°F)
grays (Gy)	100	rads
hectares (ha)	2.471	acres
kilograms (kg)	2.205	pounds (lb)
kilograms (kg)	0.001102	short tons (tons)
kilometers (km)	0.6214	miles (mi)
liters (L)	0.2642	gallons (gal)
meters (m)	3.281	feet (ft)
meters (m)	1.094	yards (yd)
metric tons (t)	1.102	short tons (tons)
sieverts (Sv)	100	rems
square kilometers (km^2)	0.3861	square miles (mi^2)
square meters (m^2)	10.76	square feet (ft^2)
square meters (m^2)	1.196	square yards (yd^2)

Appendix A

Comments Received on the Environmental Review

Appendix A

Comments Received on the Environmental Review

A.1 Public Scoping

On June 3, 2003, the U.S. Nuclear Regulatory Commission (NRC) published a Notice of Intent in the *Federal Register* to provide the public with an opportunity to participate in the environmental scoping process as defined in Title 10, Section 51.29, of the *Code of Federal Regulations* (10 CFR 51.29). This step was the initial opportunity for stakeholder participation in the revision of the *Generic Environmental Impact Statement for License Renewal of Nuclear Plants* (GEIS), NUREG-1437, Volumes 1 and 2, which occurred before the NRC had determined the results or recommendations for the revision. The NRC staff reopened scoping with a Notice of Intent published in the *Federal Register* on October 3, 2005 (Volume 70, page 57628).

Participation in the scoping process by members of the public and local, State, Tribal, and Federal government agencies was encouraged and used to accomplish the following:

- Determine whether the purpose and need for the revision (the proposed action) is clear;
- Determine the scope of the revision of the GEIS and identify whether there are any significant issues that should be analyzed in depth;
- Identify and eliminate from detailed study those issues that are peripheral or that are not significant or that have been covered by prior environmental review;
- Identify any environmental assessments and other environmental impact statements (EISs) that are being or will be prepared that are related to but are not part of the scope of the revision of the GEIS being considered;
- Identify other environmental review and consultation requirements related to the proposed action;
- Indicate the relationship between the timing of the preparation of the environmental analyses and the NRC's tentative planning and decision-making schedule;
- Identify any cooperating agencies and, as appropriate, allocate assignments for preparation and schedules for completing the GEIS revision; and

- Describe how the revision of the GEIS will be prepared, including any contractor assistance to be used.

The NRC invited the following entities to participate in the scoping process:

- Any Federal agency that has jurisdiction by law or special expertise with respect to any environmental impact involved, or that is authorized to develop and enforce relevant environmental standards;

- Any affected State and local government agencies, including those authorized to develop and enforce relevant environmental standards;

- Any affected Native American Tribe; and

- Any person who has requested an opportunity to participate in the scoping process.

The NRC held a public meeting in each of the four NRC regions for the GEIS revision. The scoping meetings were held at the following locations:

- July 8, 2003, DoubleTree-Atlanta Perimeter, 6120 Peachtree Dunwoody Road, Atlanta, GA 30328;

- July 10, 2003, Hilton-Oak Lawn, 9333 South Cicero Avenue, Oak Lawn, IL 60453;

- July 15, 2003, Hilton-Anaheim, 777 Convention Way, Anaheim, CA 92802; and

- July 17, 2003, Executive Conference Center at Bayside, 200 Mount Vernon Street, Boston, MA 02125.

Each meeting convened at 7:00 p.m. with an NRC overview of the role of the GEIS in the license renewal process, the experience gained in its use, and criteria that may be used to consider changes. Members of the public were given the opportunity to present their views, and each meeting was transcribed by a certified court reporter. In addition to the formal meeting, the NRC staff held informal discussions with members of the public one hour before the start of the session at each location; general information on the NRC and related NRC programs was available for meeting participants as supplies permitted.

Sixty-eight (68) attendees provided either oral comments or written statements. The meeting summaries are available electronically at the NRC Public Document Room or from NRC's Web-based Agencywide Documents Access and Management System (ADAMS) available at

http://www.nrc.gov/reading-rm/adams.html under accession numbers ML032250338, ML032260318, ML032260702, and ML032270109.

The initial scoping period for this revision of to the GEIS was from June 3, 2003, to September 17, 2003, but scoping was subsequently reopened between September 27, 2005, and December 30, 2005. The NRC staff reviewed the transcripts and all written material received during the scoping period and identified individual comments. All comments and suggestions received orally during the scoping meetings or in writing were considered. Each set of comments from a given commenter was given a unique alphanumeric identifier (Commenter Identification Number), allowing each set of comments from a commenter to be traced back to the transcript, letter, or e-mail in which the comments were submitted.

Table A-1 identifies the individuals providing comments and the Commenter Identification Number associated with each person's set(s) of comments. The Commenter Identification Number is preceded by LRG-S (short for License Renewal GEIS scoping). For oral comments, the individuals are listed in the order in which they spoke at the public meeting. Accession numbers indicate the location of the written comments in ADAMS.

Comments were consolidated and categorized according to topic. Comments with similar specific topics were grouped to capture the common essential issues that had been raised. Once comments were grouped, the NRC staff determined the appropriate action for the comment. For each comment, the NRC staff made a determination that it was one of the following:

- A comment that was actually a question and introduced no new information;
- A comment that was either related to support of or opposition to license renewal or nuclear power in general or that makes a general statement about the license renewal process. The comment may make only a general statement regarding environmental impact issues. In addition, it provides no new information and does not pertain to 10 CFR Part 54;
- A comment about an environmental impact issue in the GEIS that provided no new information that would require evaluation during the review;
- A comment about an environmental impact issue in the GEIS that provided new information that would require evaluation during the review;
- A comment that raised an environmental impact issue that was not addressed in the GEIS;
- A comment regarding alternatives to the proposed action;
- A comment outside the regulatory scope of license renewal (not related to 10 CFR Parts 51 or 54).

Table A-1. Individuals Providing Comments During the Scoping Period

Commenter Identification Number[(a)]	Commenter Name	Affiliation (if stated)	Comment Source and ADAMS Accession Number
LRG-S-02-AT	Rita Kilpatrick	Southern Alliance for Clean Energy	Atlanta Scoping Meeting-ML032170942
LRG-S-03-AT	Joanne Steele	Action for a Clean Environment, Oconee Project	Atlanta Scoping Meeting-ML032170942
LRG-S-04-AT	Mary Olson	Southeast Conference for Nuclear Information and Resource Service	Atlanta Scoping Meeting-ML032170942
LRG-S-05-AT	Charles Utley	Blue Ridge Environmental Defense League	Atlanta Scoping Meeting-ML032170942
LRG-S-06-AT	Jen Kota	Sierra Club	Atlanta Scoping Meeting-ML032170942
LRG-S-08-AT	Pete Sipp	GANE	Atlanta Scoping Meeting-ML032170942
LRG-S-09-CH	Oscar Shirani	Quality Assurance Consultants	Chicago Scoping Meeting-ML032260339
LRG-S-10-CH	Cynthia Sauer		Chicago Scoping Meeting-ML032260339
LRG-S-11-CH	Sarah Sauer		Chicago Scoping Meeting-ML032260339
LRG-S-12-CH	Corey Conn	Nuclear Energy Information Service	Chicago Scoping Meeting-ML032260339
LRG-S-13-LA	Rochelle Becker	San Luis Obispo's Mothers for Peace	Anaheim Scoping Meeting-ML032260715
LRG-S-14-LA	Darcie Houck	California Energy Commission	Anaheim Scoping Meeting-ML032260715
LRG-S-15-LA	Guillermo Gonzales	Representative of Senator Feinstein	Anaheim Scoping Meeting-ML032260715
LRG-S-16-BO	David Agnew	Cape Cod Downwinders	Boston Scoping Meeting-ML032170934
LRG-S-17-BO	Mary Lampert	Pilgrim Security Watch	Boston Scoping Meeting-ML032170934
LRG-S-18-BO	Tim Judson	Citizens Awareness Network	Boston Scoping Meeting-ML032170934
LRG-S-19-BO	Pat Skibbee	Citizens Within A 10-Mile Radius	Boston Scoping Meeting-ML032170934
LRG-S-20-BO	Vera Cohen	Toxic Actions Center Women's Community Cancer Project	Boston Scoping Meeting-ML032170934

Table A-1. (cont.)

Commenter Identification Number[(a)]	Commenter Name	Affiliation (if stated)	Comment Source and ADAMS Accession Number
LRG-S-21-BO	Roberto Pena	Representative of Congressman Edward Markey	Boston Scoping Meeting-ML032170934
LRG-S-22-BO	Andre Martechini	Selectman of the Town of Duxbury	Boston Scoping Meeting-ML032170934
LRG-S-23-BO	Sandra Gavutis	C-10 Research and Education Foundation	Boston Scoping Meeting-ML032170934
LRG-S-24-BO	Diane Turco	Town of Harwich	Boston Scoping Meeting-ML032170934
LRG-S-25-BO	Debbie Grinnell	C-10 Research and Education Foundation	Boston Scoping Meeting-ML032170934
LRG-S-26-BO	Oliver Hall	Massachusetts Public Interest Research Group	Boston Scoping Meeting-ML032170934
LRG-S-27-BO	Barbara Pye	Duxbury Nuclear Advisory Committee	Boston Scoping Meeting-ML032170934
LRG-S-28-BO	Kate Adams	Citizens Awareness Network	Boston Scoping Meeting-ML032170934
LRG-S-29-BO	James Milkey	Environmental Protection Chief for Attorney General Tom Reilly	Boston Scoping Meeting-ML032170934
LRG-S-30-BO	Deb Katz	Citizens Awareness Network	Boston Scoping Meeting-ML032170934
LRG-S-31-BO	Jeb Thorp	Clean Water Action	Boston Scoping Meeting-ML032170934
LRG-S-32-BO	Rita Arditti	Women's Community Cancer Project	Boston Scoping Meeting-ML032170934
LRG-S-33-E	Lorraine Cotter		E-mail-ML032260518
LRG-S-34-E	Nancy Norwood		E-mail-ML032260520
LRG-S-35-E	Oscar Shirani	Quality Assurance Consultants	E-mail-ML032260521
LRG-S-36-E	Justin Ruhge		E-mail-ML032260525
LRG-S-37-E	Mary Lampert	Pilgrim Security Watch	E-mail-ML032260727
LRG-S-38-E	Judi Misale		E-mail-ML032260731
LRG-S-39-E	Mark Reback		E-mail-ML032260733
LRG-S-40-E	Brian Hughes		E-mail-ML032260735
LRG-S-41-E	Frieda Berryhill		E-mail-ML032260736
LRG-S-42-E	Sidney Goodman		E-mail-ML032260737
LRG-S-43-E	Robert Rutkowski		E-mail-ML032260740
LRG-S-44-E	David Shelton		E-mail-ML032260741

Table A-1. (cont.)

Commenter Identification Number[(a)]	Commenter Name	Affiliation (if stated)	Comment Source and ADAMS Accession Number
LRG-S-45-E	Brian Pinkerton		E-mail-ML032260744
LRG-S-46-E	Leslie Seff		E-mail-ML032260746
LRG-S-47-E	Betty Smay		E-mail-ML032260747
LRG-S-48-E	Mary Halligan		E-mail-ML032260749
LRG-S-49-E	Edward Paul		E-mail-ML032260764
LRG-S-50-L	Judy Davidson		Letter-ML032410390
LRG-S-51-E	David Koen		E-mail-ML032410396
LRG-S-52-E	Jeff Frontz		E-mail-ML032410399
LRG-S-53-E	Mary Olson		E-mail-ML032410408
LRG-S-54-E	Andrew Berna-Hicks		E-mail-ML032410414
LRG-S-56-E	Jonathon Tromm		E-mail-ML032691024
LRG-S-57-E	Sherri Gooding		E-mail-ML032691043
LRG-S-58-L	Benjamin Tuggle	U.S. Fish and Wildlife Service	Letter-ML032691069
LRG-S-59-E	Alexander Marion	Nuclear Energy Institute	E-mail-ML032691099
LRG-S-60-E	James Boyd	California Energy Commission	E-mail-ML032691114
LRG-S-61-E	Ann Alexander/ Shannon Fisk	Environmental Law and Policy Center	E-mail-ML032691132
LRG-S-62-E	Paul Gunter	Watchdog Project, Nuclear Information and Resource Service	E-mail-ML032691152
LRG-S-63-E	Kay Drey		E-mail-ML032691173
LRG-S-64-E	Kathryn Sutton	Winston and Strawn, LLP	E-mail-ML032691194
LRG-S-65-E	Barbara Youngberg	New York State Department of Environmental Conservation	E-mail-ML032691209
LRG-S-66-E	Jay Adams/Klaus Schumann	San Luis Obispo Green Party	E-mail-ML032691217
LRG-S-67-L	Frank Snapp		Letter-ML032691272
LRG-S-68-L	Pamela Blockey-O'Brien		Letter-ML032691283

(a) Commenter Identification Numbers ending in "AT," "BO," "CH," or "LA" indicate that comments were provided at the Atlanta, Boston, Chicago, or Anaheim scoping meetings, respectively. Commenter Identification Numbers ending in "E" indicate that comments were provided by e-mail. Commenter Identification Numbers ending in "L" indicate that comments were provided by letter.

Each comment is provided in the following pages. For reference, the unique identifier for each comment (Commenter Identification Number listed in Table A-1 plus the comment number) is provided. In those cases where no new information was provided by the commenter, no further evaluation was performed.

The revised GEIS takes into account relevant issues raised during the scoping process. The revision addresses both Category 1 and 2 issues evaluated in the 1996 GEIS, along with any new information identified as a result of scoping. After receipt and consideration of the comments on the draft, the NRC will prepare a final GEIS revision, which will also be available for public review and comment.

A.1.1 Comments and Responses

The following pages summarize the comments and suggestions received as part of the scoping process and discuss their disposition. Parenthetical numbers after each comment refer to the Commenter Identification Number and the comment number. Comments can be tracked to the commenter and the source document through the Commenter Identification Number listed in Table A-1. Comments are grouped by category as follows:

A.1.1.1 Comments in Support of License Renewal and Nuclear Power

A.1.1.2 Comments in Opposition to License Renewal and Nuclear Power

A.1.1.3 Comments Concerning Water Quality, Hydrology, and Use

A.1.1.4 Comments Concerning Ecology: Aquatic Ecology; Terrestrial Ecology; Threatened and Endangered Species

A.1.1.5 Comments Concerning Human Health

A.1.1.6 Comments Concerning Socioeconomics

A.1.1.7 Comments Concerning Historic and Cultural Resources

A.1.1.8 Comments Concerning Alternatives to License Renewal

A.1.1.9 Comments Concerning Postulated Accidents

A.1.1.10 Comments Concerning the Uranium Fuel Cycle and Waste Management

A.1.1.11 Comments Concerning Decommissioning

A.1.1.12 Comments Concerning the License Renewal Process

A.1.1.13 Comments Concerning Issues Outside the Scope of License Renewal: Safety and Security; Emergency Preparedness; Economics and Need for Power; Aging Management; Potential Allegations; and Other.

A.1.1.1 Comments in Support of License Renewal and Nuclear Power

Comment: These misguided "tree huggers" who oppose to the use of Nuclear Power and think that solar, wind and others will be substitutes do not understand that the real issue is in the numbers. Those nuclear power plants turn out 2-3 billion watt-hours of power every hour of every day, night and day! That is enough for 2 million homes! California's power needs peaks at 45 billion watt hours. The alternative power sources are good for about 3-4 million watt-hours but only when the sun is shining or the wind is blowing. That is good for about 200 homes. 20 nuclear power plants would provide all the power needs of California for the foreseeable future. (LRG-S-36-E-1)

Comment: With the approval of the Yucca Mountain storage facilities by the federal government, there is no reason why California should not go full speed ahead with new and expanded nuclear power plants. (LRG-S-36-E-3)

Comment: The source of power, uranium, is almost limitless. The U.S. controls the nuclear fuel sources not the Arabs. We have unlimited nuclear fuel sources in the continental U.S. With nuclear, the U.S. can free itself from any and all foreign threats to our energy requirements. (LRG-S-36-E-5)

Comment: Concerned taxpayers for the Initiative for National Change (I.N.C.) supports energy independence for America. (LRG-S-36-E-7)

Comment: Our recommended solution to our power needs is nuclear plants to power electric homes, cars and trucks, and nuclear power for air and sea travel. We will still need oil and gas to produce all those plastics which we have all become used too. (LRG-S-36-E-6)

Response: *The comments are supportive of nuclear power. The comments are general in nature, provide no new information and, therefore, will not be evaluated further. No change will be made to the GEIS as a result of these comments.*

A.1.1.2 Comments in Opposition to License Renewal and Nuclear Power

Comment: I don't really believe in the friendly atom, I think it's a charade to keep the atomic weapons going, because as has been stated in the past here the cost of, the true cost of

nuclear energy makes no sense, and it's only 20 percent of the energy in our country, and yet we have these huge agencies and the different departments that are supposedly overseeing the whole process, and yet we get incomplete answers to our questions, or referred to some other I-don't-know-where to try to answer them. (LRG-S-03-AT-3)

Comment: We have nuclear power because the public was misled by statements of electricity "too cheap to meter,"… We now know that we were being lied to... Because the public was once fooled into believing that nuclear energy was safe and cheap does not make it acceptable to perpetuate the lie. (LRG-S-16-BO-12)

Comment: As the recent Northeast blackout reminds us, our power system is a fragile and unpredictable creation – especially in an era of deregulation – and if these old reactors are allowed to remain in operation, the risks of catastrophe are simply unacceptable. (LRG-S-54-E-2)

Comment: It is too late for my home state [Pennsylvania]- please do not spread this legacy of sorrow and suffering anywhere else in our nation. (LRG-S-33-E-3)

Comment: What is wrong with you people? To merely consider re-licensing plants for another 20 years is not science. It is technological prostitution. (LRG-S-42-E-1)

Comment: I certainly do not believe that the NRC should renew the operating licenses for up to an additional 20 years. In fact, I do not believe nuclear power plants are safe enough to operate for the full 40- year duration of their existing licenses. (LRG-S-63-E-7)

Comment: Please do not renew any certificates of operation for any nuclear power plant, anywhere. Period. The only exception would be college research facilities for academic studies of nuclear physics/energy/fusion, etc., but not for the purpose of becoming public utilities- only for the sake of pure science and advancement of knowledge. We, as humans, must stop being arrogant wastrels of multi-dimensional earth resources. (LRG-S-67-E-1)

Comment: Small wonder there is a draft letter now being circulated which calls for a vote of no confidence in the Nuclear Regulatory Commission.

The letter cites chapter and verse a long list of documented betrayals of the public safety and health by the NRC. Obviously, NRC stands for Nobody Really Cares. How do you people live with yourselves? (LRG-S-42-E-3)

Comment: This [license renewal] is unconscionable considering the facts that the industry has aged sooner than expected. (LRG-S-37-E-3)

Response: *The comments express opposition to license renewal and nuclear power. The comments are general in nature, provide no new information and, therefore, will not be evaluated further. No change will be made to the GEIS as a result of these comments.*

Comment: The operation and maintenance costs of nuclear power plants are very high, but what really involves significant outlay of capital for investors (despite the government's history of providing massive subsidies to the industry) are the construction costs. Nuclear power plants are notorious for construction cost overruns. It can take many years for private investors to break even and begin to see a return on their investment in nuclear power. Thus, operating license renewals are another means by which investors in nuclear can further amortize their costs, i.e. give them more time (20 additional years) to recoup the money spent in building the reactor, regardless of the increased safety risks from running an aging reactor. Those 20 years also give the plant owners more time to formulate the cheapest – and shoddiest - decontamination and decommissioning (D&D) plan for the reactor and the entire site when it is finally, permanently shut down, and to find the money to pay for it (at least that portion beyond what is foisted upon taxpayers and ratepayers). Reactor licensees will always attempt to dodge the expense of a thorough, proper cleanup of a site – thus endangering the public and possibly exposing them to further radiation risks. (LRG-S-48-E-4)

Comment: The last order for a nuclear power plant in the United States that was not subsequently canceled was placed in October 1973 --- thirty years ago. That is because the public --- including the majority of the directors of America's investor-owned electric utilities --- recognized that nuclear plants are expensive, dirty and dangerous. (LRG-S-63-E-1)

Comment: Phase out nuclear power now and stop producing the dreadful radioactive waste.

How much sense does it make to continue with a technology which benefits just one of two generations but then burdens the next 12,000 with safeguarding the extremely toxic radioactive waste!?! Without taxpayer subsidies, bailouts, "recovery of stranded costs" and similar schemes, nuclear power cannot compete with benign and sustainable energy sources. Why continue to expose the residents of our planet to the risk of nuclear catastrophe when other forms of energy production are readily available?

Therefore, the SLO GREEN Party opposes any re-licensing of existing nuclear power plants, whether generic or site specific. (LRG-S-66-E-1)

Comment: Please do not give any funding to build Nuclear Reactors. Is the production of electricity so important that our children's lives must be sacrificed to obtain it. (LRG-S-33-E-2)

Comment: Given all of the above, re-licensing, especially 20 years ahead of time, whether generic or site specific, is a disservice to public health and safety. Re-licensing of the existing nuclear plants would therefore be a violation of your mandate. (LRG-S-66-E-6)

Response: *The comments express opposition to nuclear power and emphasize the cost of building and operating nuclear plants. The comments are general in nature, provide no new information and, therefore, will not be evaluated further. No change will be made to the GEIS as a result of these comments. It should be noted that the NRC does not fund the construction of nuclear reactors. The NRC is responsible for licensing and regulating the operation of nuclear power plants to ensure the protection of public health and safety and protection of the environment.*

Comment: From cancer risks to being targeted for a terrorist attack, having a nuclear power plant in the community poses unique hazards. Whether it's a permitted, routine release of radiation; an "incident;" an accident or worse, nuclear reactors are hardly just another industrial facility. The U.S. nuclear industry and its alleged regulators, much like the nuclear industry worldwide, have a shoddy record, at best, of keeping this inherently dangerous technology under control. From the meltdown at Pennsylvania's Three Mile Island in 1979 to the recent brush with disaster at Ohio's Davis-Besse, nuclear power's history is riddled with failures and their severe consequences. After the tragic events of 9/11 we "learned" that terrorists consider nuclear reactors potential targets. License renewals only increase the chances of another Three Mile Island, or worse. If there were an accident or attack on a U.S. nuclear power plant, it's far from certain that emergency evacuation plans could adequately protect the public. (LRG-S-48-E-2)

Response: *The comment expresses opposition to nuclear power and identifies a number of concerns. The comment is general in nature, provides no new information and, therefore, will not be evaluated further. No change will be made to the GEIS as a result of this comment. The license renewal process proceeds along two tracks – one for review of safety issues (10 CFR Part 54) and another for environmental issues (10 CFR Part 51). Safety issues and enhancements to safety that are deemed necessary (e.g., security enhancements at power plants following 9/11) are considered outside the scope of the environmental review.*

A.1.1.3 Comments Concerning Water Quality, Hydrology, and Use

Comment: Water concerns, water impacts certainly that affect us at the Georgia plants, and this is true throughout the Southeast Region.

As we know, the nuclear energy industry has an enormous thirst for large quantities of water resources, and that's been very well documented. You can pretty easily compare fuel types

across a host of environmental factors ranging from water quantity, water quality, going on to air quality, air quantity, land use, et cetera. (LRG-S-02-AT-4)

Comment: So considering those -- discharge temperatures, I spoke a little earlier about the water, excessive water consumption, looking at the water that is permanently lost to the environment because these plants don't just run and then spit all the water back into the river. (LRG-S-02-AT-12)

Response: *The power industry in general does require a large quantity of water. While the NRC does review and assess issues related to consumptive water usage and discharge temperatures back to the environment, water usage is ultimately dictated by each individual State through its water appropriations permit system and the National Pollutant Discharge Elimination System permitting program, not the NRC. The licensee is required by the NRC to operate in compliance with all its permits, therefore minimizing the impacts to the environment. Permits must be renewed on a periodic basis and any public concern about those permit requirements can be addressed then. The comments are general in nature, provide no new information and, therefore, will not be evaluated further. No change will be made to the GEIS as a result of these comments.*

Comment: I believe that the environmental issue regarding “impacts of refurbishment on surface water quality” should not be treated as a Category 1 item --- that is, as one that is not to be assessed for each reactor site independently. (I apologize if I have read the “Appendix B to Subpart A” table incorrectly, but my computer was not able to let me view or print out the right and left margins concurrently.) (LRG-S-63-E-8)

Response: *The issue of impacts of refurbishment on surface water was determined as a Category 1 issue in the 1996 GEIS. However, this and other environmental issues will be re-evaluated as part of the GEIS revision. If new and significant information is found that suggests that re-categorization of this or other issues is appropriate, Table B-1 will be revised accordingly.*

Comment: I would also urge you to study the “discharge of chlorine or other biocides” on a site- specific basis. I have read of concerns that even some of the NRC licensees have had about the excessive amounts of chlorine needed for their cooling towers. (LRG-S-63-E-10)

Response: *The amount of the water discharged by each individual plant and the chemical levels in that water are determined by individual States through the National Pollutant Discharge Elimination System permitting program, not the NRC. The licensee is required by the NRC to operate in compliance with all its permits, therefore minimizing the impacts to the environment. However, this and other environmental issues will be re-evaluated as part of the*

GEIS revision. If new and significant information is found that would suggest that re-categorization of this or other issues is appropriate, Table B-1 will be revised accordingly.

A.1.1.4 Comments Concerning Ecology

Aquatic Ecology

Comment: Requirements for cooling towers to reduce thermal degradation of coastal waters and aquatic sea life. (LRG-S-13-LA-9)

Comment: Until the once-through reactor cooling systems are reengineered to meet existing environmental protection requirements; nukes dependent upon them should be closed. Once through cooling with its destruction of fish, shell fish, birds, sea turtles, and marine mammals due to impingement and temperature shock, is unnecessary and unacceptable. The thermal pollution of a billion gallons of water per reactor per day is evidence of the insufficiency of this outdated technology, and the full effect of this primitive practice is not understood. To suggest the continuation of this violation of environmental protection laws for an additional 20 years is absurd. At a minimum, the addition of cooling towers, which would reduce thermal pollution and attendant environmental destruction to 1/25th of its present rate should be required. (LRG-S-16-BO-13)

Comment: I thought that was a requirement that the least damaging technology to the environment is what is supposed to be used. Quite clearly, once through cooling is the most damaging technology that can be used… In pulling in all that water you have the tiny larvae and fish, and eggs, being pulled in. You have the larvae being pulled in and the larger animals being damaged or pulled in, and then the super heated water going back out and having its negative effect on the plant life there, the fish there. And then when you shut the plant down, those who can survive in a hotter water temperature now are nailed because the water gets cold again. There is another technology, being cooling towers, or dry cooling, and I would think that this should be a requirement of any relicensing. (LRG-S-17-BO-13)

Comment: The provisions of Clean Water Act section 316 (b) should be made a requirement of all projects at the time of renewal, unless the Environmental Protection Agency, in consultation with the Service specially waives these requirements. (LRG-S-58-L-4)

Comment: The default procedures should either include implementing the best technology available for screening cooling water intakes or for developing necessary studies in consultation with the Service to determine if other alternatives would be sufficient. (LRG-S-58-L-5)

Comment: 10 CFR 51.53 (c)(3)(A): The necessity of screening cooling water intakes should be determined on a case-by-case basis and should not be subject to an arbitrary threshold based on river discharge. (LRG-S-58-L-10)

Comment: Thermal Damage to Marine Environments: Damage to the coastal marine environment and biota from warm seawater discharges from California nuclear plants is a continuing problem. Efforts are underway to offset the damage of the cooling system discharges, which dump large amounts of seawater into the ocean each day at much warmer temperatures. California utilities have conducted extensive studies on thermal damage to marine environments. The plant-specific environmental review during license renewal should include the findings from these and other studies. The review should evaluate the cumulative impacts to the coastal marine environment adjacent to the plant associated with plant license renewal and extended operation. These potential impacts and mitigation strategies should be reviewed on a site-specific basis during license renewal proceedings. (LRG-S-60-E-6)

Comment: Increased Damage to Marine and Aquatic Environments as the Result of Once-Through Cooling System Damage and 20-year license extension.

Appendix B to Subpart A “The Environmental Effect of Renewing the Operating License of a Nuclear Power Plant” for Aquatic Ecology states that cold shock, thermal plume and scouring be treated as Category 1 items with small impact. Recent studies conducted at the state level surpass NRC’s earlier conclusions.

On July 11, 2003 the State of New York publicly released a study including an assessment of the Indian Point once-through cooling system environmental impact on fish eggs, larvae, small fish and aquatic vegetation in the Hudson River that directly contradicts earlier NRC findings regarding Thermal Plume Barriers To Migrating Fish--Category 1--SMALL. Thermal plumes have not been found to be a problem at operating nuclear power plants and are not expected to be a problem during the license renewal term.”

On July 11, 2003 the California Water Quality Control Board-Central Coastal Region abandoned a proposed settlement with Pacific Gas and Electric on once-through cooling system for Diablo Canyon nuclear power station’s severe thermal pollution of Diablo Cove and destruction of marine habitat. The findings of the California Water Quality Control Board assessment of the thermal discharge from Diablo Canyon are in direct contradiction to NRC finding “Scouring caused by discharged cooling water--Category 1--SMALL. Scouring has not been found to be a problem at most operating nuclear power plants and has caused only localized effects at a few plants. It is not expected to be a problem during the license renewal term.” In fact, CWQCB concluded that Diablo Canyon’s thermal discharged had scoured significant portions of Diablo Cove to “essentially bare rock.”

Similarly, the State of Vermont has additional requested that a study of Vermont Yankee nuclear power station's to assess the proposed 20 % power uprate and thermal plume impact on fish populations in the Connecticut River.

Therefore, NIRS contends that the environmental impact on aquatic ecology assessment and treatment as a Category 1 item has been surpassed by more recent studies released by the State of New York and the State of California. These items should therefore be re-evaluated as Category 2 items for NEPA contentions admissible in site specific proceedings for license extension. (LRG-S-62-E-13)

Response: *Since the development of the 1996 GEIS, new studies and data have been published on the effects of power plant cooling water withdrawal and thermal discharges. The U.S. Environmental Protection Agency (EPA) and the States, not the NRC, regulate cooling water intakes and thermal discharges through National Pollutant Discharge Elimination System (NPDES) permits and Clean Water Act regulations. Power plants cannot operate without valid NPDES permits. Per the National Environmental Policy Act (NEPA), the NRC is required to assess potential environmental impacts, including those resulting from cooling water intakes and thermal discharges. The NRC staff will review new data and studies published since the 1996 GEIS, and will incorporate any new information as appropriate in the GEIS revision. The NRC staff will consider the comments above for the GEIS revision.*

Comment: Inadequate analysis requiring review

In addition to the analyses discussed above, at least one section of the GEIS contains significant factual gaps and inaccuracies, and needs to be reviewed and revised accordingly:

Section 4.2, Once-Through Cooling Systems; Section 4.3, Cooling Towers. In the sections concerning impacts of cooling systems on receiving or nearby waterbodies, the GEIS repeatedly describes environmental consequences as "of small significance," and the changes that would be required to mitigate them as "costly," concluding that NRC does not consider the changes warranted. No further information is provided as to either the cost of these changes or the degree of mitigation they would likely accomplish. More information needs to be provided regarding the measures cited – operating additional wastewater treatment systems, reducing the plant's generation rate, and changing to a closed-cycle cooling system – as well as any additional water quality mitigation measures that may be evaluated in the updated GEIS. (LRG-S-61-E-7)

Response: *In preparing the revised GEIS, the NRC will revisit impact determinations made in the 1996 GEIS and update these if necessary on the basis of the best available information, including any new and significant information that would change the conclusions in the 1996 GEIS. After the completion of the revised GEIS, the NRC will reconsider the appropriateness of*

the conclusions regarding the Category 1 and Category 2 issues in Table B-1 of 10 CFR 51 Subpart A, Appendix B and revise this table accordingly. The comment will be considered when developing the revised GEIS.

Comment: NRC should clarify the language that defines the applicability of the issue addressing the impacts of thermophilic organisms in the affected water [10CFR51.53(c)(3)(ii)(G)]. The GEIS specifically limits the concern to 25 plants. Current language in the GEIS and the rule, as well as, treatment in GEIS supplements issued to date is inconsistent. (LRG-S-59-E-7)

Response: *The comment refers to text in 10 CFR 51.53 that describes the content of environmental reports to support license renewal applications. In preparing the revised GEIS, the NRC will revisit impact determinations made in the 1996 GEIS and update these if necessary on the basis of the best available information, including any new and significant information that would change the conclusions in the 1996 GEIS. After completing the revised GEIS, the NRC will reconsider the appropriateness of the conclusions regarding the Category 1 and Category 2 issues in Table B-1 of 10 CFR 51 Subpart A, Appendix B and revise this table accordingly. The comment will be considered when developing the revised GEIS.*

Comment: With respect to aquatic ecology issues and, specifically, the "accumulation of contaminants in sediments or biota," again I believe that a site-specific analysis is warranted. Because of variations in the plants' operating histories --- including unplanned events, the quality of the fuel rods, etc. --- the amounts of corrosion, activation and fission products released to the cooling water source from each nuclear plant is different. The buildup in the sediment at the discharge pipe of cobalt-60, and other isotopes released with the discharge water, is potentially available to bottom-feeding fish. The longer a reactor operates, of course, the greater will be the accumulation of contaminants. It should also be essential to analyze the drinking water intakes of the closest downstream towns or cities, especially if those communities have larger populations than when the plant's initial environmental statement was prepared and its construction permit was issued.

As a nuclear plant ages, solvents like chelating agents are used to dissolve radioactive corrosion products and other materials that have plated out over the years on surfaces of pipes, pumps and other components. Because the radioactive materials may stay bonded to the chelates, and thus remain in solution, they can pass out through the liquid-waste filtering system and be released into the environment. The buildup of crud and the need to use solvents increase as the plant ages. (For example, chelates are used to reduce corrosion products that emit penetrating gamma rays that may have accumulated within pipe elbows, making the pipes dangerously less efficient and precluding the ability of inspectors and repair personnel to get near a leaking pipe.) Only by analyzing the sediment near a specific plant's discharge structure can an evaluation be made of the environmental impacts of the liquid

effluent during the plant's 40-year operating life and an estimate be made of the impacts to be expected during the requested 20-year license extension. The downstream aquatic ecology is also, of course, affected. (We can only hope that someday soon better environmental monitoring technologies will become available for water, air and land.) (LRG-S-63-E-11)

Response: *The NRC staff will consider impacts of radioactive and nonradioactive contaminants on bottom-feeding fish and other biota for the revised GEIS. The EPA and the States regulate contaminant release through NPDES permits, and power plants cannot operate without valid NPDES permits. In addition, more than 10 Federal laws give the EPA, the U.S. Army Corps of Engineers, the National Oceanic and Atmospheric Administration, and other Federal, State, and Tribal agencies authority to address sediment quality. The NRC staff will review new data and studies published since the 1996 GEIS, and will incorporate any new information as appropriate in the GEIS revision.*

Terrestrial Ecology

Comment: 10 CFR 51.53(c)(3)(H): The assessment described in this section should also include an analysis of effects on migratory birds, pursuant to the Migratory Bird Treaty Act and the eagle acts as appropriate. (LRG-S-58-L-11)

Response: *Potential impacts to migratory birds and eagles will be considered for the revised GEIS.*

Comment: Both the "ECRR 2003" Report and countless other studies, including my own (unpublished), are very concerned with serious effects to wildlife and migrating birds from emissions/noble gas releases/crop and wild vegetation radioactive uptake (ingested)/tritium recycling through forest canopies increasing exposure (established in the 1970's at the D.O.E.'s Savannah River Nuclear Site - measurements of chromosome aberrations and other markers of radiation damage should be done of humans, animals, birds, plants, fish, insects, in a 20-mile radius of all nuclear plants and results disclosed to the public prior to any decision on a license renewal. The public needs to know the damage caused and be able to extrapolate further damage. (LRG-S-68-L-3)

Response: *Potential impacts to terrestrial and aquatic biota from exposure to radionuclides will be considered for the revised GEIS.*

Threatened and Endangered Species

Comment: The GEIS and Part 51 currently require that transmission lines that were considered in the original environmental impact statement for the plant must be reviewed as part of the Environmental Review under Part 51. For these lines, the environmental review must

look at two issues: the impact of electrical shock and impact on threatened and endangered species. Also, of consideration for transmission lines is the issue of chronic effects of EMF, a topic that has not yet been categorized as Category 1 or 2. Chronic effects of EMF will be discussed separately in this letter. When nuclear plants were constructed, they were often connected to the high voltage electrical grid by new transmission lines, substations, and switchyards that were constructed solely to connect the nuclear plants to the grid. This review as part of the original environmental impact statement was appropriate. However, with time and changes to the high voltage grid system, the industry believes that this treatment of transmission lines is no longer appropriate, and the GEIS and Part 51 should be revised to reflect these changes. As the grid has changed, many of the transmission lines that were originally installed to connect the nuclear plant to the grid are now an integral part of the high voltage grid system. The industry believes that transmission lines, substations, and switchyards that were reviewed in the original EIS that are now part of the grid should not have to be included in the environmental review. If the nuclear plant would not have its license renewed and the plant were no longer operating, these transmission lines, substations, and switchyards would remain in service as part of the high voltage grid system. Any impacts that these lines have on electrical shock and T&ES would not change when the nuclear plant would be removed from operation. This results in no change to the impacts caused by the transmission lines. Therefore, since there are no changes in the impacts, whether the plant continues to operate or is removed from operation, there is no impact of the proposed major licensing activity. There is thus no reason to have to review these two issues for environmental impacts from continued operation of the nuclear plant. Transmission lines, substations, and switchyards that would remain in service only to connect the nuclear plant to the grid would be subject to review for impacts on the two issues listed above. (LRG-S-59-E-2)

Comment: Also regarding the scope of the NRC's environmental review with respect to transmission lines, the Group agrees with NEI that the NRC should narrow the scope of its consideration of the acute effects of electric shock to include only those transmission lines that would remain in service only to connect the nuclear plant to the grid. As a matter of law, the National Environmental Policy Act of 1969 ("NEPA") does not require an evaluation of environmental effects that are not related to the proposed action (here, license renewal). Where transmission lines, substations, and switchyards would remain in service regardless of whether the subject nuclear plant would continue to operate, any effects related to transmission lines are not effects of the proposed action, and therefore no assessment is required by NEPA. The same logic would apply to the NRC's consideration of threatened and endangered species in the plant's transmission corridors. (LRG-S-64-E-3)

Response: *The NRC staff will consider these comments for the Revised GEIS.*

A.1.1.5 Comments Concerning Human Health

Comment: Considering the vast knowledge on genetic damage to all species from any exposure to any level of ionizing radiation, it is wicked to re-license any of these radiation spewing nuclear behemoths. (LRG-S-68-L-5)

Comment: I have already mentioned that you need regulations at the generic level that reflect all of the population -- baby cancer rates, child cancer rates, and I'm going to get real explicit here, I had fibroid tumors ten years. Women bleed a lot, we are different than men. You have to look at women too. There needs to be the standard woman, the standard child, the standard infant, and the standard fetus in addition to the standard man, and the standard elder, and then we'll quibble about whether they're correct. (LRG-S-04-AT-12)

Comment: Now, the initial license is for forty years, so that would be 2,472 [deaths and]…the additional twenty years which what we're talking about here, the additional 1,236 on top of 2,472 we come up with 3,708, 3,708 deaths from cancer associated with sixty years of operating 103 reactors… these are fuel cycle only, these are fuel cycle only, and they have been evaluated as a generic impact. (LRG-S-04-AT-2)

Comment: The standard man is not an adequate indicator for your impacts on the environment, we don't care about your regulations under NEPA, we care about your impacts, and your impacts on babies are many times greater than your impacts on standard men. You need to come clean and have standards that reflect the population you are mandated under law to protect. (LRG-S-04-AT-4)

Comment: Blinky [a cartoon character fish with 3 eyes] Is here because Blinky absorbs -- I think he lives in water -- a high amount of tritium by organic molecules inside his little body, much like a fetus inside of a woman would have high amounts, high amounts of tritium found in its little body.

Now, there are cells that are like the ovaries in a female, the nervous system of any female which are not regenerated quickly is among themselves. So this means that the tritium in those cells will be around practically for the lifetime of this individual. So we're talking long-term genetic defects, we are talking mental impairment.

How many of you listen to music from another generation which -- In any case, as far as the tritium in-utero involves special dosimetric considerations. Also fetal cells require rapid -- from organic tissues, and certain things provide very little or no subsequent cell proliferation. That would be the central nervous system that would be the ovaries and a woman's fetus. (LRG-S-06-AT-5)

Comment: In Grundy County, under the cancer mortality rate of all ages, from 1996 to 1999, was eighteen percent above the U.S. Infant mortality rate has been on a steady increase. And in the county from, and I want to make sure I state these right, from 1995 through '99, it is forty-eight percent above other Illinois counties and sixty percent above the U.S. The incidence of pediatric cancer is on the rise. (LRG-S-10-CH-1)

Comment: I have been advised by physicians, by medical researchers, by geologists, physicists and yes, even and I want to stress unofficially, by the EPA, to keep asking about the safety of the nuclear facility in my area and why the leading cause of death in an area that it says here economically is not at high risk of cancer, has as the leading cause of death, cancer. I challenge you to take the responsibility to strictly enforce your current standards and to become much more actively involved in preventative health issues and environmental issues. (LRG-S-10-CH-3)

Comment: What are the agency's assumptions regarding risk of health effects from ionizing radiation? If they are not consistent with those of Dr. John Gofman, they are probably wrong. He has the only track record for being right on this subject. The GEIS should assess risk, which is an impact, using assumptions of biological harm from ionizing radiation that are at least as cautious as Dr. Gofman's. Continuing radiation doses to the public at current levels is unacceptable. Millirem by millirem this agency facilitates cumulatively raising the background radiation levels worldwide. Genetic damage to the entire biosphere, save humans, is stridently ignored, without even estimating the repercussions. (LRG-S-16-BO-11)

Comment: The American public does not want to be dosed with radiation. Since there [are] no safe doses of ionizing radiation, referring to radiological impacts as small is akin to saying that a restaurant regularly serves only a little botulism. The doses may be small to you, but for the parents of a child with birth defects, they are not. Shouldn't this agency at least pretend to respect the citizens that it is mandated to protect? (LRG-S-16-BO-16)

Comment: Radiation exposure to the public is small and radiation doses will continue at the current levels associated with normal operations. Somehow that is supposed to be good news. It is clear that from the current levels the footprints of radiation linked disease are found around our reactor communities. There was a case control study that dealt with leukemia, for example, around Pilgrim, showing a four-fold increase the closer you lived to work. There have been statistical studies of higher than expected thyroid cancers, and there have been studies of higher than expected Downs Syndrome in the Deerfield River Valley, and it goes on, and on, and on. So clearly then the current levels are too high. And we know the effects of radiation are cumulative, and there is certainly far more research since Chernobyl showing the effects of radiation on human health; that they are cumulative, and that they are carcinogenic with other toxic compounds. (LRG-S-17-BO-7)

Comment: So it is very clear that in relicensing that there has to be a reassessment in lowering the dose, and stopping the baloney of ALARA. You have to have a standard like a standard from a chemical release, for example, and other toxins. You don't see on the highway that we suggest that you go 65 miles an hour. You have a standard, and it would make sense to do the same, for example, with the release of a chemical is to the standard of one cancer incidence per million. Now, if we are to meet the same standard, which is only reasonable, then that would be reducing to .025 millirem per year. A standard, not a goal. Not a suggestion, but a standard. (LRG-S-17-BO-8)

Comment: If you have radiation, and if you are considering a power plant to relicense, and they are in biologically compromised communities already, you have to have adequate monitoring. Technologically, the monitoring that is on, for example, the Pilgrim Nuclear Power Plant is antiquated. You need to have upgraded monitoring to measure alpha, beta, and gamma on a continuous basis from all egress routes on-site, and that similar type monitoring off-site located according to wind direction and topography, and to have instantaneous readouts to the Department of Public Health in the State, the Department of Emergency Management, and to the local communities. (LRG-S-17-BO-9)

Comment: As David, the fellow from the Cape discussed, you mentioned that 20 more years of operation will bring about 1,200 cancer deaths. I think if we all picked up the paper tomorrow and we saw that 1,200 American soldiers who were killed yesterday, we would think that it was serious. Why isn't this serious? That is a good question. Plus, it is an insulting underestimation, because all it considers is cancer deaths, and not the other impacts which should be considered; reproductive disorders, cell damage, compromised immune systems, etcetera. Also it assumes accidents, and it does not take into account accidents and non-routine releases, such as that occurred in my neighborhood nuclear plant in 1982. Somehow that does not count. (LRG-S-17-BO-11)

Comment: You can't play games as you are doing with risk assessments. That what has to be considered, and whether it is standard now is irrelevant, is the impact of a radiation dose on the people who are most at risk, and who in fact live by this reactor that you are going to allow to go for another 20 years. That is not a hypothetical reference man who is 30 years old, and who weighs 170 pounds and is healthy, but rather who lives there and is most at risk, pregnant women, small children, the elderly, the sick. We do not have homogenized requirements to live near a nuclear plant. So therefore if you are going to be discussing health impact, it is critical that it is done in an honest way to in fact protect the people who are there. (LRG-S-17-BO-10)

Comment: I think that we should be requiring as part of a plant relicensing certainly, and I think we should require it anyway, but it certainly is the relicensing, but that we install monitors, and a lot of them around, that could be doing two things. One, monitoring the long term health, because a lot of the projections and calculations that you make in a GEIS are based on

theoretical calculations, risk probabilities and things. What I would be much more comfortable in, and I am sure that the public would be, is if you can say, yes, we have made a calculation that says that the chance and probability of developing cancer is X based on some theoretical analysis. But then to actually monitor it over a period of time, and much more extensively than we are doing today. And the second benefit of course is during any kind of a nuclear event that you would be able to in real time monitor much -- and have it wired to FEMA's headquarters, to the NRC headquarters (LRG-S-22-BO-5)

Comment: Nuclear reactors release radioactivity to the air and water as part of their normal day to day operation. There is no safe dose of radiation. Its effects are cumulative. Many studies have demonstrated that low constant levels of radiation exposure can cause cancer and genetic mutations. Continuing at current levels associated with normal operations is no comfort. Do we really need more radiation to add to our existing biological burden? The allowable rate of release has been too large, and must be decreased. (LRG-S-26-BO-9)

Comment: The NRC currently grossly underestimates the risk of the public's exposure to radiation released by licensees through a number of statistical and methodological errors. Therefore, calculations have to be readjusted to determine real impact. Lower allowable limits must be established, and monitoring put in place, and an alternative assessment performed. (LRG-S-26-BO-10)

Comment: I want to end with the health consequences, because they are real and immediate. I mean, when Pixie was talking about the Down’s syndrome in and around where I live, we have a 10-fold increase in Down’s syndrome. We have statistical significance in non-Hodgkins Lymphoma, and statistical significance in multiple myeloma and breast cancer, and that may not mean much to people outside of my community, except if you live in another reactor community, or you live in a waste community where everyone has the same statistics. And so when you talk about small impacts, these may be small to you, but the suffering and loss of our children is unacceptable to us, and is not a small impact, and it is an insult to us that it is talked about that way. (LRG-S-30-BO-8)

Comment: Our organization is committed to the precautionary principle, and the precautionary principle and what you guys are doing are just completely opposite. The precautionary principle is about prevention, and is about if there is suspicion of harm, you stop doing what you are doing, and you look at the bigger picture, and just a suspicion of harm should be enough to prevent a release in your plants. We are going to take from this session and what we learned today to the Women's Cancer Movement, and you are going to hear about it. (LRG-S-32-BO-1)

Comment: This [license renewal] is unconscionable considering the facts... that footprints of radiation-linked disease are found in reactor communities surrounding our reactors. (LRG-S-37-E-5)

Comment: Lastly, the health risks from routine radiation releases from nuclear plants, and from contamination of groundwater, air and soil is likewise unacceptable. (LRG-S-38-E-4)

Comment: I do not accept…the health risks from routine radiation releases from nuclear plants, and from contamination of groundwater, air and soil. (LRG-S-39-E-5; LRG-S-40-E-5; LRG-S-44-E-5; LRG-S-46-E-4; LRG-S-47-E-5; LRG-S-49-E-4; LRG-S-51-E-5)

Comment: During the Peach Bottom hearing, Mr. McDowell stated that there is NEAR unanimous agreement in the Scientific Community in the radiological public health sector that the existing standards are adequately protective of public health. (Generic Environmental Impact Statement for License Renewal of Nuclear Power Plants, September 10 NUREG-1437) With all due respect NEAR is not good enough! (LRG-S-41-E-3)

Comment: Please protect the children from this awful disease and don't put bad things in our water, air and -- thank you. (LRG-S-11-CH-1)

Comment: The NRC acknowledges that there are human health risks for any radiation exposures, and even NRC Commissioner Jeffrey Merrifield has stated that in these release practices "there is a potential that the radioactive component may be concentrated in the recycling process or that the material will be recycled in a form resulting in more actual contact with the general public." Additionally, little is known regarding the synergistic impacts resulting from radiation exposures in combination with exposures to other toxics. The Commission nonetheless supports such a program, despite these risks and massive public outcry. The consequences from 20 additional years of operation and waste generation at 104 nuclear plants in conjunction with massive dispersal of wastes into the unregulated environment would certainly be quite significant. (LRG-S-43-E-6)

Comment: Within the scope of license extension, this is type of response is increasing inappropriate. Nuclear power station operations routinely discharge radioactive gas, particulate and effluent. Annual radioactive release filings by licensees to the NRC document the ongoing discharge of persistent radioactive toxins (measured in half-lives) that are bio-concentrating and bio-accumulative. For example, licensee annual radioactive release reports identify that a typical nuclear power station will routinely discharge short-lived noble gases that decay into long-lived radioactive particulate. The fallout of radioactive particulate then bio-magnifies in downwind environments of operating nuclear power stations.

For example, typical routine discharges contain the following gas-to-particulate isotopes:
*krypton-89 (3.2 minute half-life) decays into strontium-89 (52 day half-life)
*xenon-137(3.9 minute half-life decays into cesium-137 (30 year half-life)
*xenon-135 (9.17 hour half-life) decays into cesium-135 (3 million year half-life)

There remains no known or established safe threshold level for human exposure to radiation. Each additional exposure raises, not lowers, the risk of deleterious health and genetic consequences. The current EIS for license extension fails to seriously address this matter. It is unreasonable for the EIS to go into considerable detail when evaluating the impact of station operation on fish and shellfish populations and, at best, only superficially evaluate potential radiological impacts of station operation on human populations downwind, downstream, in close proximity and long duration of residency.

During the initial licensing of nuclear power stations, the NRC assumed that the various regulations governing routine releases of radioactive materials provided adequate protection of public health. The NRC has failed to ensure that its original assumption is valid. An environmental impact statement with considerably less attention paid to potential human health consequences from routine radiation releases than from impingement of fish and shellfish is totally inconsistent with the NRC's federal mandate to protect public health and safety. (LRG-S-62-E-4)

Comment: Each reactor or set of reactors will have been releasing its own unique collections of radioisotopes into its cooling water source (river, lake or ocean) during the duration of its license, and each receiving body of water has its own flow rates, volume, drought history, accumulation of sediments, etc. The effluents that will be released into the environment during the 20-year license renewal term would also be uniquely determined --- based on the reactor's operating history, including the designs and operating history of its systems, structures and components.

We are often told that pollutants are of little concern when they are diluted or dispersed into the vast atmosphere or into large bodies of water. In fact, the NRC's draft License Renewal GEIS of August 1991 implies just that: "Radioactive material released to the atmosphere tends to spread and disperse in air and dilute in water." (NUREG-1437, Vol. 1, p.5-44) Similar dispersal and dilution claims are made for the carbon dioxide, sulfur dioxide, nitrogen oxide, and mercury that are released from fossil-fuel plants, and yet we now know that the impacts of the Mid-Western coal-fired plants on Pennsylvania and other East Coast states are harmful, and contribute to global warming. Some of a nuclear power plant's gaseous effluents and liquid discharges --- containing long-lived radioactive wastes --- may disperse and become diluted over time, but they will nevertheless persist in the human environment. The radiological releases from the entire uranium fuel cycle, from mining through waste disposal, will likewise continue to pose risks to the biosphere.

No economically feasible technology exists that can filter such beta-emitters as tritium, krypton, and xenon from the routine releases of a nuclear plant, and no equipment exists that can monitor precisely the full range of components in the releases into the atmosphere (during

venting, purging and mini-purging) or into the cooling water source (during continuous and batch releases). Therefore, radioactive materials are released into the environment in unknown quantities and concentration levels. In other words, no one really knows how much is released or where it ends up. At the very least, the NRC should attempt to assess, as judiciously as possible, the impacts on surface and groundwater, air and soil that the routine and accidental releases of radioactive wastes would have during the requested 20 years of additional operation. (LRG-S-63-E-9)

Comment: …the following should be included or used: (1) all recommendations and dosimetry in the "European Committee on Radiation Risk (ECRR) 2003 Recommendations of the ECRR, Health Effects of Ionizing Radiation Exposure at Low-Dose for Radiation Purposes, Regulator Edition, Brussels 2003" (www.euradcom.org2003) ISBN.1-897761-24-4. (LRG-S-68-L-1)

Comment: If you place a map of cancer clusters in the US on top of a map of where Nuclear Reactors are in the US- the maps are almost identical. (LRG-S-33-E-1)

Response: *The NRC's primary mission is to protect the public health and safety and the environment from the effects of radiation from nuclear reactors, materials, and waste facilities. The NRC's regulatory limits for radiological protection are set to protect workers and the public from the harmful health effects of radiation on humans. The limits are based on the recommendations of standards-setting organizations. Radiation standards reflect extensive scientific study by national and international organizations (International Commission on Radiological Protection [ICRP], National Council on Radiation Protection and Measurements [NCRP], and the National Academy of Sciences [NAS]) and are conservative to ensure that the public and workers at nuclear power plants are protected.*

Health effects from exposure to radiation range from no effect at all to death and can be responsible for inducing diseases such as leukemia, breast cancer, and lung cancer. Very high (hundreds of times higher than a roentgen-equivalent-man [rem]), short-term doses of radiation have been known to cause acute effects, such as vomiting and diarrhea, skin burns, cataracts, and even death. Although radiation can cause cancers at high doses and high dose rates, currently there are no data to unequivocally establish the occurrence of cancer following exposures to low doses and dose rates below 0.1 Sv (10 rems). For example, people living in areas of the country that receive greater levels of background radiation (such as Denver, Colorado) do not show higher rates of cancer.

As stated above, there are no reputable scientifically conclusive data that unequivocally establish the occurrence of cancer following exposure to low doses and dose rates, below about 0.1 Sv (10 rem). However, radiation protection experts conservatively assume that any amount of radiation may pose some risk of causing cancer or a hereditary effect and that the

risk is higher for higher exposures. Therefore, a linear, no-threshold dose-response relationship is used to describe the relationship between radiation dose and detriments such as cancer induction. Simply stated, any increase in dose, no matter how small, results in an incremental increase in health risk. This theory is accepted by the NRC as a conservative model for estimating health risks from radiation exposure, with the recognition that the model probably overestimates those risks. On the basis of this theory, the NRC conservatively establishes limits for radioactive effluents and radiation exposures for workers and members of the public, as found in 10 CFR Part 20. In addition, for nuclear power reactors, the NRC imposes special license conditions that require radioactive gaseous and liquid effluent to be as low as reasonably achievable (ALARA) in accordance with the dose objectives contained in Appendix I to 10 CFR Part 50.

The amount of radioactive material released from nuclear power facilities is well measured, well monitored, and known to be very small. The doses of radiation that are received by members of the public as a result of exposure to nuclear power facilities are so low that resulting cancers have not been observed and would not be expected. Although a number of studies of cancer incidence in the vicinity of nuclear power facilities have been conducted, there are no studies to date that are accepted by the scientific community that show a correlation between radiation dose from nuclear power facilities and cancer incidence in the general public. Specific studies that have been conducted include the following:

- *In 1990, at the request of Congress, the National Cancer Institute conducted a study of cancer mortality rates around 52 nuclear power plants and 10 other nuclear facilities. The study covered the period from 1950 to 1984 and evaluated the change in mortality rates before and during facility operations. The study concluded that there was no evidence that nuclear facilities may be linked causally with excess deaths from leukemia or from other cancers in populations living nearby.*

- *In January 2001, the Connecticut Academy of Sciences and Engineering issued a report on a study around the Haddam Neck nuclear power plant in Connecticut and concluded that radiation emissions were so low as to be negligible.*

- *In 2001, the American Cancer Society concluded that although reports about cancer clusters in some communities have raised public concern, studies show that clusters do not occur more often near nuclear plants than they do by chance elsewhere in the population. Likewise, no evidence links strontium-90 with increases in rates of breast cancer, prostate cancer, or childhood cancer. Radiation emissions from nuclear power plants are closely controlled and involve negligible levels of exposure for nearby communities.*

- *Also in 2001, the Florida Bureau of Environmental Epidemiology reviewed claims of striking increases in cancer rates in southeastern Florida counties caused by increased radiation exposures from nuclear power plants. However, using the same data to reconstruct the calculations on which the claims were based, Florida officials were not able to identify unusually high rates of cancers in these counties compared with the rest of the State of Florida and the nation.*

- *In 2000, the Illinois Public Health Department compared childhood cancer statistics for counties with nuclear power plants to similar counties without nuclear plants and found no statistically significant difference.*

As part of the GEIS revision, the studies listed above and recent reports such as the National Academy of Sciences' Committee on the Biological Effects of Ionizing Radiation (BEIR) Report, BEIR VII: Health Risks from Exposure to Low Levels of Ionizing Radiation, *and recommendations concerning health effects associated with radiation exposure will be thoroughly reviewed to ensure that the NRC's primary mission to protect the public health and safety and the environment continues to be met. The comments challenge the adequacy of the NRC's radiation protection regulations, which is outside the scope of this process. Therefore, no change will be made to the GEIS based on these comments.*

Comment: I got the 2001 radiation monitoring report from the Oconee Plant, and I haven't seen the 2002, maybe it's out and available, but I haven't found it, I would love to have a copy of that.

But it was a 93- or 97-page report from the different sites around the plant in a ten-mile radius and on with the vegetation, and air, and water, and sedimentation, and things like that that they test for isotopes, and I was having a hard time trying to figure out where the hot spots were, but I thought I had circled a few, and I sent them to Dave Close who is on the board of the Institute for Energy and Environmental Research, and he was saying that the way that the monitoring is done and compiled that it dilutes the findings, so that it was hard to really see exactly where some of the problems were, but that he did notice that there were high levels of tritium in some of the places, and high levels of cesium and sediment in some places from the Oconee plant, but ways of tracing that back to events and situations that caused that were hard to follow in the way that monitoring and records are kept, so I guess my question is how can it be traced back, and when the three-eyed fish reminded me of that question that I had had originally, and I do bring it up, but a more clear way of monitoring releases and the accumulation of some of the radioactive isotopes that get released from the plants during operation, what was in place and what's available to us to see those things. (LRG-S-03-AT-10)

Comment: When we look at the fusion sediment [fission products] produced each year by a 1,000-megawatt nuclear power plant it amounts to about 4 million curies, and since the half-life is about thirty years it becomes a very limited case over the year.

If we assume 99 percent containment, and that's a pretty high figure I think you will all agree, if we look at the hundred nuclear power reactors that we have operating, and an extent of 25 years, the amount of the curies released by those hundred power plants in 25 assuming 99 percent containment is equal to four Chernobyls. If you assume a life for these nuclear power reactors beyond 50 years, that would be eight Chernobyls. 99 percent containment. (LRG-S-06-AT-4)

Response: *All nuclear plants were licensed with the expectation that they would release some radioactive materials to both the air and water during normal operation. Airborne and liquid releases of radionuclides from nuclear power plants must meet radiation dose-based criteria specified in 40 CFR Part 190, 10 CFR Part 20, and the as low as reasonably achievable (ALARA) criteria in Appendix I to 10 CFR Part 50. Regulatory limits are placed on the radiation dose that members of the public might receive from all of the radioactive material released by the nuclear plant combined. Licensees are required to report liquid, gaseous, and solid effluent releases as well as the results of their radiological environmental monitoring program annually to the NRC. The annual effluent release and radiological environmental monitoring reports submitted to the NRC are available to the public through the NRC's Agencywide Documents Access and Management System (ADAMS) electronic reading room available through the NRC Web site (www.nrc.gov/reading-rm/adams.html). The comments provide no additional information; therefore, no change will be made to the GEIS as a result of these comments.*

Comment: According to the NRC's own estimates the proposed GEIS will allow the killing of over 1,000 people over 20 years… (LRG-S-16-BO-3)

Comment: The technical guidance documents used to calculate the costs associated with human deaths attributable to commercial nuclear activity…. You know, the 12 per 20 years of operations. (LRG-S-53-E-2)

Response: *This calculated value of 12 additional deaths from fatal cancer over the 20 years of additional operation of a nuclear power plant is the result of several conservative assumptions. This value is, in fact, a calculated upper bound value based on cancer risk factors for radiation exposure. It does not mean that 12 people will die from cancer as a direct result of an additional 20 years of continued routine operation of any nuclear power plant. These calculations use the concept of collective dose. Collective dose estimates effects across a very large population, assuming that a small amount of radiation dose spread out among a large population would yield similar effects to a larger amount of radiation dose to a much smaller population. This is a very conservative assumption.*

The Health Physics Society (www.hps.org) states that "[b]elow the dose of ten rem, estimations of adverse health effect is [sic] speculative. Collective dose remains a useful index for quantifying dose in large populations and in comparing the magnitude of exposure from different radiation sources. However, for a population in which all individuals receive lifetime doses of less than 10 rem above background collective dose is a highly speculative and uncertain measure of risk and should not be quantified for the purposes of estimating population health risks."

The cancer risk factors used in this calculation are also quite conservative. They are taken from the BEIR-V report, Health Effects of Exposure to Low Levels of Ionizing Radiation*. In this report, it is estimated that "if 100,000 persons of all ages received a whole body dose of 0.1 Gy (10 rad) [roughly equivalent to 10 rem] of gamma radiation in a single brief exposure, about 800 extra cancer deaths would be expected to occur during their remaining lifetimes in addition to the nearly 20,000 cancer deaths that would occur in the absence of radiation. Because the extra cancer deaths would be indistinguishable from those that occurred naturally, even to obtain a measure of how many extra deaths occurred is a difficult statistical estimation problem." The radiation dose contribution to the population from current nuclear power plants is estimated to be 4.8 person-rem per year, whereas the dose contribution to the population from the complete uranium fuel cycle is 136 person-rem per year. The dose to an individual is only a very small fraction of these population doses. The nuclear fuel-cycle contribution to an individual's average radiation dose is less than 0.001 rem per year, as shown by the NCRP Report 93,* Public Radiation Exposure from Nuclear Power Generation in the United States*, as abstracted by the University of Michigan (http://www.umich.edu/~radinfo/). The comments provide no additional information; therefore, no change will be made to the GEIS as a result of these comments.*

Comment: Lack of Analysis for Increased Public Health Risk Associated with Additional Radiation Exposures to Routine Operational Releases as a Result from 20-year License Extension

The Environmental Impact Statement (EIS) fails to properly consider the potential impact on human health from radioactive releases during normal plant operation.

On one hand, Section 4.1.2 of the Supplemental Environmental Impact Statement (SEIS) for Calvert Cliffs discusses the impacts of routine plant operating on fish and shellfish, reporting that "…approximately 1,600,000 finfish and blue crabs would be collected on the traveling screens, 260,000 would die…".

On the other, Section 4.3 of the SEIS for Calvert Cliffs discusses the potential impact on human health from radioactive material released during normal plant operation. On page 4-16, the EIS

states, "No significant new information has been identified by the staff in the review process and in the staff's independent review."

Why are the environmental impacts on fish and shellfish discussed in detail while radiation impacts on human health are not detailed?

The NRC typically replies that an evaluation for radiation impacts on humans is outside the scope of the environmental reviews... The final report must include a detailed assessment of potential health consequences from routine and bio-magnifying radiation releases. This assessment should [be] made by a station-specific evaluation involving independent and peer review. The evaluation can not be the simply repackaging of past generic studies.

If detailed assessments of potential health consequences from cumulative and routine radiation releases from nuclear power stations seeking license renewal contradict NRC's previous assumption, then it becomes necessary to conduct this assessment effort for all subsequent license renewal applications. Otherwise, it is imprudent for the NRC to continue to grant 20-year extensions without such public health assessments. (LRG-S-62-E-3)

Response: *The radiological impact on humans is within the scope of the GEIS. This area is evaluated for each license renewal application for new and significant information that may contradict the Category 1 classification in the GEIS. The radiological impacts on human health as a result of license renewal are discussed in Section 4.9 of the GEIS. The impacts will be reconsidered as part of the revised GEIS.*

Comment: NRC should update the analysis of chronic effects from exposure to electric and magnetic fields and categorize it appropriately. Two major U.S. reports have concluded that limited evidence exists for an association between EMF exposure and increased leukemia risk, but that when all the scientific evidence is considered, the link between EMF exposure and cancer is weak. The World Health Organization in 1997 reached a similar conclusion. The two reports were the U.S. National Academy of Sciences (NAS) report issued in 1997 (Ref 1) and, in 1999, the National Institute of Environmental Health Sciences (NIEHS) report to the U.S. Congress at the end of the U.S. EMF Research and Public Information Dissemination Program (RAPID) (Ref. 2). A National Research Council committee of the NAS made the following conclusion in a report documenting its evaluation of research on potential associations between EMF exposure and cancer, reproduction, development, learning, and behavior: Based on a comprehensive evaluation of published studies relating to the effects of power-frequency electric and magnetic fields on cells, tissues, and organisms (including humans), the conclusion of the committee is that the current body of evidence does not show that exposure to these fields presents a human-health hazard. Specifically, no conclusive and consistent evidence shows that exposures to residential electric and magnetic fields produce cancer, adverse neurobehavioral effects, or reproductive and developmental effects.

Based on the results of the EMF RAPID program, the NIEHS believes that the probability that ELF-EMF exposure is truly a health hazard is currently small. The weak epidemiological associations and lack of any laboratory support for these associations provide only marginal, scientific support that exposure to this agent is causing any degree of harm. (LRG-S-59-E-6)

Comment: I know it's real common to save the environment, and where T-H-E has the way of separating the subject from, the topic from where we live, and I think it would be real good in your information also for the NRC to place, it would take the same amount of space in the sentence, take out "the" and put in "our" -- I can't find any examples in front of me right now -- but when you say our environment then it has to do with us personally because we can't live here without it. And that would be a help. (LRG-S-08-AT-3)

Response: *The comment is within the scope of the GEIS and will be considered for the GEIS revision.*

Comment: The NRC's mandate is to protect public health and safety. More than anything, the Mothers for Peace wishes that our mission and the NRC's actions could provide that future. (LRG-S-13-LA-11)

Response: *The comment is general in nature, provides no new information and, therefore, will not be evaluated further. No change will be made to the GEIS as a result of this comment.*

Comment: My parents, when I look when I looked at the radiation fallout from nuclear bomb testing they were in high-exposure zones, and they say that a lot of this, a lot of the problems identified as exposure to radiation can come up in the third generation, which is my children, and I'm seeing it in my sister's and brother's children who have died from different things that could be attributed, but how do you trace it back. Like Mary was saying, who are these deaths, and who are these people, and how can you have a flag on them to say this person was exposed and so their child has leukemia, or this person. (LRG-S-03-AT-7)

Response: *The populations discussed in the comment were subjected to radionuclides from fallout from weapons testing, not from routine low-level offsite exposures associated with the nuclear fuel cycle. The NRC is committed to preventing detrimental health impacts to the public and has regulations covering all phases of the uranium fuel cycle. NRC regulations related to exposure to the public are found at 10 CFR Part 20. In addition, EPA regulations related to radiation are found at 40 CFR Parts 190 through 194. Radiation standards reflect extensive scientific study by national and international organizations (International Commission on Radiological Protection [ICRP], National Council on Radiation Protection and Measurement [NCRP], and National Academy of Sciences [NAS]) and are conservative to ensure that public and workers at nuclear power plants are protected. As a result, the dose rates expected from*

all phases of the nuclear fuel cycle are expected to be very low from chronic exposure, even to maximally exposed individuals. The comment provides no additional information; therefore, no change will be made to the GEIS as a result of this comment.

A.1.1.6 Comments Concerning Socioeconomics

Comment: The additional economic burden that nuclear plant owner-operators pass on to ratepayers is also unacceptable. (LRG-S-38-E-3; LRG-S-39-E-4; LRG-S-40-E-4; LRG-S-44-E-4; (LRG-S-46-E-3; LRG-S-47-E-4; LRG-S-49-E-3; LRG-S-51-E-4; LRG-S-52-E-2)

Response: *As stated in 10 CFR 51.95(c)(2), the economic costs and benefits of renewing an operating license are not required to be addressed in the GEIS, primarily because the issues raised by these comments involve energy planning decisions that are made by State regulators and utility officials. The NRC has no role in these energy planning decisions. Therefore, because the comments are not within the scope of license renewal and provide no new information, they will not be evaluated in this GEIS.*

Comment: The NRC should consider revising the scoping of the current Category 2 socioeconomic issues associated with augmented workforce due to license renewal. Industry experience to date indicates that many of the activities associated with license renewal are bounded by current programs and activities, and, in most cases, do not require any staff augmentation. As stated in the GEIS (section 4.7), “Estimates…of additional work force required during license-renewal-term operations indicate that only one additional worker will be required on a continuous basis for maintenance and inspection activities.” The GEIS then goes on to contemplate an additional 60 workers “to account for workers (contractors or rotating utility employees) who are not associated with refueling but may be on-site intermittently.” Industry experience to date indicates that the number of workforce additions required to support operation during the period of extended operation, if any, are much lower than the 60 additional staff per site contemplated to be necessary intermittently in the original GEIS. The industry has not identified any activities that would require such staff augmentation above and beyond that which already occurs during routine refueling outages (which is already analyzed in the GEIS). Even considering 60 additional intermittent staff, as the GEIS asserts, industry evaluations to date indicate the impact is insignificant and, consequently, all Category 2 issues associated with workforce augmentation should be transferred to Category 1. (LRG-S-59-E-4)

Response: *The comment is within the scope of the GEIS and will be considered for the GEIS revision.*

Comment: But we rarely, though we do express not only our appreciation but our pride in the Nuclear Regulatory Commission, and certainly the decision about Environmental Justice impacts of the Louisiana Energy System's proposal for Homer, Louisiana is something that we

take pride in as an organization having worked with the local affected community in helping them with their struggle, but we also have repeatedly taken pride in announcing the Nuclear Regulatory Commission's backing of the Atomic Safety Licensing Board decision on the Environmental Justice portions of that case. (LRG-S-04-AT-14)

Response: *The comment is supportive of NRC's environmental justice analysis. The comment provides no new information and, therefore, will not be evaluated further. No change will be made to the GEIS as a result of this comment.*

Comment: Gentlemen, I'm here just to tell you that you have an awesome responsibility, and I don't envy the seat that you're sitting in, but you're sitting there as a regulator and one who has to take this information back.

I think it is important that you look at a few things. Not only do I represent the Blue Ridge Environmental Defense League, but I also represent the High and Algin Park Improvement Committee.

I think that's important for me to tell you because it also represents not only poor blacks, but poor whites. And when I look at the implications of having a generic, and the term kind of bothers me because it tells me that I'm missing something. When it's generic you know I can go to the doctor and he says I can have the real thing, or you can get this generic, but it also tells me that something may not work as well as the original intent.

So I would like for if it's going to be generic let's put everything that's conceivable that will cause a problem for the patient to be addressed.

And in particular when we look at Plant Vogtle, it's in Burke County east of the Mississippi, the poorest county, evacuation routes all go through EJ [Environmental Justice] communities, a community even through now is one of the poorest, yet it's bounded by a big nuclear factory.

But this company has an opportunity to do generic stuff, we're looking to meet all the obligations to those farmers, we're going to meet all the obligations to the babies that haven't been born and hope to be born.

One thing about it, when we do things in a generic form we have to be sure that we cross all of the Ts and dot all of the Is, and I for one, if I could, I would afford the best of life, but I can't.

But whenever I have to take a generic anything I try to take one that's representative of the original. But all I'm saying is today I want to give you something to take back, and it is that all of you sitting here at some point in your life have liked to have had an extended family, which

means that you want babies, you want a husband, or you want a wife, you want grandchildren, or you want generations to follow after you, but it also makes sure that those things happen.

I have to reflect it as I see it, and then I'm going to close because I won't have a sermon until Sunday, and that is that it always goes to the first born boy to carry on the legacy of the family. Am I right about it?

So if we intend to have our strong boys looking after our young ladies then we must provide for them, irregardless of where they come from, irregardless of socioeconomics, irregardless of black, white, poor, or whatever, during that impact statement be it a generic or the original, must address those things.

So I'm asking that if it's an E.J. issue it should be not put on the back burner, or not left up to the plant, because I would write anything I wanted to if it was my plant, because my job other than as a minister I am counselor by profession, but I am also one who looks at children, and when I study kids we do a thing called an SST. That's where a child is having problems learning in school.

And I look where that child comes from. Most of them have been exposed to some form of radiation. Most of them I have been informed have been exposed to less health care.

Now I represent a community that has 240 known deaths that's been related to chemical exposure -- disproportionate I should say -- and that is not fair, because if they could they would have moved, but they couldn't move.

But it's up to us, the gentlemen here in particular, and where appropriate, ladies, you are too, to fight the battle for those who cannot fight, to speak for those who cannot speak, and to stand for those who cannot stand.

So I tell you now just let us put some faith in your ability to do what you've been designed to do. All of us are brothers of one another, like it or not, and we have to take care of one another, and if I can take care of Charles Utley I can take care of you. Let us take care of one another.

It's good to have good power. Yes, I came from kerosene lights. That works too. So we'll have to also learn that we can't have everything, but the things that we can have let's have them in a clean, wholesome environment.

We're all God's children as Martin Luther King would say, black children and white children.

And I'm going to sit down, because you know when I visit the hospital, have you ever been able to determine when you went to the maternity ward whether it was a black baby, a Japanese

baby, or a white baby that was crying. When you can answer that then you've answered yourself. Thank you. (LRG-S-05-AT-1)

Comment: I want to bring to your attention that there's a new coalition of Navajos who are saying not us, not us any more. If you look at fuel cycle, you will look, and you will look, and you will look, and you will have a hard time finding white people, you will have a hard time finding rich people, and so I am challenging the Nuclear Regulatory Commission to reconsider whether socioeconomic impact is the correct parameter for Environmental Justice, since these people are not rich and they are not white. They are dead. And if they're babies, there's a lot more of them than 1,236. (LRG-S-04-AT-3)

Comment: I understand in my point of view why we do a site-specific analysis and Environmental Justice impacts for license renewal. Was there any generic analysis of Environmental Justice done?...with regard to environmental impacts that are in the GEIS currently that do have Environmental Justice implications, and so therefore is it correct to say that the agency has not evaluated those?... Let's be specific. Fuel cycle impacts... are a generic issue, have an Environmental Justice component. (LRG-S-04-AT-1)

Comment: If you consider your EIS for fuel cycle complete without the Environmental Justice angle attached then it's not complete. And then again you're saying that you are looking at the Environmental Justice angle for license renewal. This doesn't include the fuel cycle portion? And so therefore it sounds like you're saying that EJ issues for fuel cycle treatment are not being considered at all. (LRG-S-06-AT-1)

Comment: Are Environmental Justice issues relating to fuel cycle going to be addressed in any future Environmental Justice issuance by the NRC? (LRG-S-06-AT-2)

Comment: And so that when you conceive of there being 20 more years of operation,…but you have also got a tremendous environmental justice problem, with literally 2 tons of radioactive waste produced through the operation of that reactor before the fuel even goes into it. I mean, this is absolutely abominable. I know that it is not accounted for in the GEIS, or as an environmental justice issue, or as a consequence of the continued operation of the reactor. (LRG-S-18-BO-2)

Response: *These comments concern environmental justice issues, are within the scope of the GEIS, and will be considered for the GEIS revision.*

A.1.1.7 Comments Concerning Historic and Cultural Resources

Comment: The NRC Staff has taken the position that the area of potential effect (APE) for a license renewal action is the area at the power plant site and its immediate environs that may

be impacted by post-license renewal land disturbing operation or projected refurbishment activities associated with the proposed action. The APE may extend beyond the immediate environs in those instances where post-license renewal land disturbing operations or projected refurbishment activities, specifically related to license renewal, potentially have an effect on known or proposed historic sites. This determination is made irrespective of ownership or control of the lands of interest (e.g., ADAMS Accession No. ML031830303, from Pao-Tsin Kuo, Program Director, License Renewal and Environmental Impacts to Maynard Crossland, Director, Illinois Historic Preservation Agency). (LRG-S-59-E-5)

Comment: Regarding historical and archaeological resources, the NRC Staff has now taken the position that the area of potential effect ("APE") under the National Historic Preservation Act for a license renewal action is "the area at the power plant site and its immediate environs that may be impacted by post-license renewal land disturbing operation or project refurbishment activities associated with the proposed action." It has further concluded that the APE may extend beyond the immediate environs in those instances where post-license renewal land-disturbing operations or projected refurbishment activities, specifically related to license renewal, potentially have an effect on known or proposed historic sites. These determinations effectively remove transmission lines from the agency's consideration of this issue. This conclusion should be codified in the updated GEIS to reflect the agency's revised position. (LRG-S-64-E-2)

Response: *The comments concern the impacts of license renewal on historic and cultural resources; within the scope of the GEIS, and will be considered for the GEIS revision.*

A.1.1.8 Comments Concerning Alternatives to License Renewal

Comment: And when you look at these from not just the cleaner alternative fuels that are starting to come onto the market now, but also the traditional conventional fuels, the nuclear fuel ranks the worst, and it ranks the worst for good reason that it has the biggest impact on the environment. (LRG-S-02-AT-5)

Comment: Many other alternatives for energy use and energy efficiency… to keep our lights on and our air conditioning, because we're killing our children and their children with this process. (LRG-S-03-AT-8)

Comment: Is there any requirement for an alternative assessment, because I think that it is very clear -- we know that there are cheaper ways to generate electricity if you remove all the subsidies. We know that there are safer ways to generate electricity. I don't think that many people are worried about a terrorist attacking a wind farm. No other type of generation produces wastes that is poisonous for thousands of years. So if you do an honest alternatives assessment, I don't even see why we are doing this. (LRG-S-17-BO-17)

Comment: Ocean wave power: The nuclear industry in Great Britain killed it's implementation there back in the early 1990's. It's making a slow recovery because good ideas won't die, but we will if we don't start implementing them. This is probably the number one most efficient and largest possible source of power for cities and industries worldwide.

Solar power: Is definitely part of the solution. I believe I a multifaceted or integrated approach to meet urban and industrial power needs and solar panels are a good part of an integrated solution for residential use in particular. Power costs to produce solar technology are high, but the components can be recycled, which nuclear power cannot honestly claim and nuclear power isn't even fractionally close to being as safe as solar power panel manufacture.

Solar thermal power generation plants: They work, more new jobs again and have minimal impact on the environment compared to the long-term effects of nuclear power and fossil fuel power generation.

Wind power, it's working to cut the power deficit in California, very clean and efficient. (LRG-S-67-E-3)

Comment: Or even point out that there has been a serious lack of assessment of alternatives to nuclear power generation in this country as a whole. (LRG-S-28-BO-1)

Response: *The NRC staff must evaluate the environmental impact of alternatives as part of the NEPA process. Impacts of reasonable alternative technologies, which may include conservation, coal, natural gas, and a combination of technologies, including renewables, are evaluated for each individual license renewal, and the NRC staff compares the resultant environmental impacts to those of continued operations during the license renewal term. The NRC's evaluation of alternatives is limited to an assessment of the environmental impact of each alternative. On the basis of the analyses of alternative technologies presented in many past Supplemental Environmental Impact Statements (SEISs), construction and operation of facilities implementing alternative technologies typically result in environmental impacts equal to or greater than renewal of the current operating license. This result is primarily due to the need to construct these new facilities. In addition, the decision to employ an alternative technology is not within the jurisdiction of the NRC. While the NRC makes its decision whether or not to renew the license on the basis of safety and environmental considerations, the final decision on whether or not to continue operating the nuclear plant will be made by the utility, State, and - in some cases - Federal (non-NRC) decisionmakers on the basis of economics, energy reliability goals, and other objectives over which the other entities may have jurisdiction. The comments concern alternatives to license renewal and will be considered for the GEIS revision.*

Comment: Nuclear does not pollute the atmosphere while providing our maximum power needs while using a minimum of land for power generation. Nuclear plants cover about 16-30 acres to generate the billions of watts of power while renewable sources must cover thousands of acres to equal one nuclear plant in power generation. (LRG-S-36-E-4)

Comment: While alternate power sounds good, it is in itself not sufficient to meet the present or growing needs of the California population! The story is in the numbers. Alternate sources can reduce the amount of fuel that is used by the present big power producers but they are no substitute for the 24 hour a day plants that we need to meet our daily requirements in the biggest state in the Union. (LRG-S-36-E-2)

Response: *The evaluation of alternatives in the revised GEIS will include consideration of a range of environmental impacts resulting from power production and will take into consideration characteristics of energy technologies, including capacity factors that may affect their ability to serve as alternatives to renewing a nuclear power plant's operating license. More generally, the NRC staff is currently revising the GEIS to reflect changes in technology since the 1996 publication. The comments will be considered for the GEIS revision.*

Comment: Section 8.1 of the GEIS states that the NRC will conduct a full analysis of alternatives during individual license renewal reviews. To support the NRC review, utilities provide analyses of replacement energy alternatives. Based on previously approved applications, alternatives for replacement power are generally the same from plant to plant. Applications to date have indicated that the environmental impacts of license renewal are small and less than the environmental impacts of alternatives for replacement power.

It is recommended that the NRC perform a bounding analysis of license renewal environmental impacts relative to environmental impacts of alternative energy sources. Based on the bounding analysis, individual licensee analysis of the environmental impacts of alternative energy sources would not be required. The industry believes that the results of these analyses will conclude that the environmental impact of alternate generation is larger than the impact of renewing the license. (LRG-S-59-E-3)

Response: *The NRC staff is currently revising the GEIS and will consider changes in energy technologies that have occurred since the 1996 publication. Changes in energy technologies after the GEIS revision will be addressed in plant-specific supplements to the GEIS.*

Comment: Alternative Electricity Sources: Regions of the U.S. differ in their reliance upon and availability of alternative electricity generation technologies (gas-fired plants, renewables, demand-side management, etc.). A regional or site-specific evaluation of alternative electricity sources, in comparison to nuclear power plant license renewal, should be provided in the environmental evaluation. (LRG-S-60-E-3)

Response: *In fulfilling the NRC's responsibility under NEPA, the NRC staff currently provides a site-specific evaluation of environmental impacts for reasonable energy alternatives and compares those impacts to the potential environmental impacts of each plant's proposed license renewal. The comments are related to alternatives to license renewal and will be considered for the GEIS revision.*

Comment: Cut the need for power by vastly expending the efficient of our industrial products to reduce the need for disposability. (LRG-S-67-E-4)

Response: *The NRC staff's evaluation of alternatives in the GEIS includes consideration of opportunities for conservation of power. It is not, however, within the NRC's regulatory authority to implement actions relating to the efficiency of industrial products, or to make other decisions regarding energy policy or the implementation of an alternative to license renewal; these decisions are made by State, utility, and Federal (other than the NRC) decisionmakers. The NRC's authority regarding environmental impacts of license renewal is limited to determining whether the impacts of the proposed action are so great – relative to the impacts of reasonable alternatives – that they make extended operation of a nuclear power plant an unreasonable option for decisionmakers. The comment concerns alternatives to license renewal and will be considered for the GEIS revision.*

Comment: Section 8.3, Environmental Impacts of Alternative Energy sources. The GEIS does not reach any conclusions regarding alternatives to license renewal but instead provides data regarding alternative energy sources that is to be used to analyze those alternatives in each supplemental EISs. The data in the GEIS (most of which is from the early 1990s), however, presents a very outdated view of the viability and environmental impacts of renewable energy sources such as wind, solar, and biomass, and the potential of energy efficiency efforts to reduce the need for power generation. Today, renewable energy sources and energy efficiency present a lower-cost, safer, and environmentally cleaner approach to meeting the nation's energy needs than renewing licenses for aging nuclear power plants. Technological improvements and market developments have greatly increased the efficiency and capacity of renewable energy, while at the same time reducing its cost and environmental impact. Reacting to these changes, twelve states have enacted Renewable Portfolio Standard ("RPS") legislation, requiring that a proportion of all power generated in the state be from renewable sources. The NRC should update the GEIS to reflect the current reality that wind, solar, biomass, and energy efficiency are reasonable alternatives to the renewal of license for aging nuclear power plants. Following is some of the new data regarding these energy sources:

i. Section 8.3.1, Wind. The GEIS states that wind power is not appropriate for baseload power, that no utilities are planning to construct large wind power plants, and that wind power would use large amounts of land, be noisy, and negatively impact birds. These statements are not

accurate and should be updated in the revised GEIS. Technological advancements have led to wind turbines with a capacity factor of up to 40%, a figure that increases significantly when turbines are combined with storage facilities. In addition, wind turbines have an availability factor of 98%, higher than most other power sources. These improvements have reduced the cost of wind power to less than 5 cents per kilowatt hour, which is competitive with most other energy sources. They have also led to a substantial increase in the amount of wind power installed – in 2001 and 2002 a total of 2,106 megawatts of wind energy was installed nationwide, raising the total wind energy in the U.S. to 4,685 megawatts. Federal studies estimate that wind energy could supply around 20% of the electricity used in the United States, which is the same proportion that is currently provided by nuclear energy. Such reliance on wind power would not come at the high environmental cost suggested by the GEIS. Unlike with nuclear power plants, nearly 95% of the land devoted to a wind power site remains available for other uses such as agriculture. In fact, many farmers see wind power as a cash crop that can supplement their agriculture income. In addition, concerns about the impact of wind turbines on birds arise almost completely from the fact that one of the earliest wind farms, Altamont Pass, was unfortunately located in an area with high year-around raptor use. Outside of Altamont Pass, there is an average of only 1 to 2 bird kills per wind turbine per year.

ii. Section 8.3.2 and 8.3.3, Photovoltaic Cells and Solar Thermal Power. As with wind power, the GEIS suggests that solar photovoltaic ("PV") and thermal power is not appropriate for baseload power, is costly, and would have significant land impacts. In fact, however, solar PV and thermal power are increasingly viable alternatives. Solar PV technology has advanced to the point where PVs are a good source of power, especially in remote areas and to help meet peak power demand. Meanwhile, solar thermal systems are an economically efficient way for household water heating. Numerous cities, individuals, and even the White House currently use PV and/or solar thermal systems to help meet their power needs. Finally, the GEIS substantially overstates the land impacts of relying on solar PV and thermal power. Most solar power units are located on rooftops of buildings, meaning that no new land disturbance is caused by those units.

iii. Section 8.3.14, Conservation. The GEIS properly notes that energy conservation efforts could help reduce the demand for energy in the U.S., thereby removing the need for some additional power plants. More recent data than that included in the GEIS, however, shows that the potential of energy conservation to reduce energy demand is even greater than that cited in the GEIS. For example, the American Council for an Energy-Efficient Economy estimates that a comprehensive energy efficiency program could reduce energy demand by 18 % in 2010 and 33% in 2020. Similarly, an expansion of state and utility electricity conservation programs could reduce electricity demand by 17% in 2020. In addition, the potential environmental impacts of energy conservation efforts identified in the GEIS (indoor air quality and impacts from manufacture of conservation equipment) are extremely minor in comparison to the impacts avoided by reducing the need for additional energy production. (LRG-S-61-E-5)

Response: *The NRC recognizes that there are new data available on the performance and environmental impacts of many energy technologies. The NRC staff is currently working to update the GEIS with current information for energy alternatives, including, as the commenter notes, wind, solar, biomass, and other technologies, as well as information regarding demand-side management approaches, such as conservation. The staff's evaluation of alternatives in the context of license renewal is limited to an assessment of their environmental impacts relative to those of continued operations of a nuclear power plant during the license renewal term. The NRC does not, however, make energy policy decisions or decide whether to use a nuclear power plant or an energy alternative; this decision is reserved for State, other Federal, or utility-level decisionmakers. The comment concerns alternatives to license renewal and will be considered for the GEIS revision.*

Comment: In Section 8.2.4.7, the SEIS states, "None of these technologies [biomass-derived fuels] have progressed to the point of being competitive on a large scale or of being reliable enough to replace a base load plant such as CCNPP." Other renewable energy technologies are comparably dismissed in Section 8.2.4 of the draft SEIS.

On one hand, the SEIS gives full credit to one uncertain, unproven and unlicensed technology (i.e., disposal of high-level nuclear waste). Nuclear utilities have filed suit against the Department of Energy for breach of contract related to overdue acceptance of high level nuclear waste. That lawsuit clearly suggests some doubt regarding the reliability and availability of a repository.

On the other hand, the SEIS tosses aside renewable technologies claiming that their development has not progressed enough to be reliable at this time, even though the SEIS is typically submitted more than a decade in advance of the expiration of the applicant's operating license. The draft SEIS apparently presumes that the repository will someday become available but that renewable technologies will not. Thus, the draft SEIS appears to apply separate standards to favor nuclear power and penalize alternatives. Inequitable treatment must be removed from the final report. (LRG-S-62-E-10)

Response: *The NRC has evaluated the safety and environmental effects of long-term storage of spent fuel onsite or at offsite independent storage facilities, and has determined that spent fuel can be stored safely and without significant environmental impacts for at least 30 years beyond the licensed life of plant operation (existing license plus any license renewals; see 10 CFR 51.23). The NRC believes that there is reasonable assurance that a mined, geologic repository will be available in the first quarter of the 21st century and that sufficient capacity will exist to dispose of spent fuel and commercial high-level waste within 30 years beyond the licensed term of operation for a nuclear reactor. As for the NRC's treatment of alternative energy sources, the NRC has evaluated and will continue to evaluate the environmental*

impacts of reasonable alternative energy sources in each SEIS, on the basis of the site-specific and technology-specific characteristics that may affect whether technologies or combinations of technologies can serve as alternatives to renewing a nuclear power plant's operating license. The NRC staff is currently revising the GEIS; and will consider changes in energy technologies that have occurred since the 1996 GEIS publication. This comment provided no new information on the scope of the GEIS, but concerns conclusions in a plant-specific SEIS, and will not be considered for the GEIS revision.

Comment: Why play with nuclear energy when it is not at all cost effective? It simply costs too much to produce when there are better alternatives that are more dependable and much more simple to produce. I can see the need for research around nuclear energy, but implementation has been extremely premature as we haven't been able to produce nuclear power in a cost effective manner and we are not at all able to safely dispose of the by-products of nuclear power generation. The long-term costs, which should always be considered, are far too great and easily dwarf any current utility benefit. (LRG-S-67-E-2)

Response: *As stated in 10 CFR 51.95(c)(2), the economic costs and benefits of renewing an operating license are not required to be addressed in the GEIS, primarily because the issues raised by these comments involve energy planning decisions that are made by State regulators and utility officials. The NRC has no role in these energy planning decisions. From the perspective of the licensee and the State regulatory authority, the purpose of renewing an operating license is to maintain the availability of the nuclear plant to meet system energy requirements beyond the terms of the plant's current license. Therefore, because the comments are not within the scope of license renewal and provide no new information, they will not be evaluated in the revision to the GEIS.*

A.1.1.9 Comments Concerning Postulated Accidents

Comment: In April of 1985, testimony before Congress, the Nuclear Regulatory Commission's Palladino said, quote, there is a 45 percent chance of another severe core melt accident at a U.S. reactor by the year 2005. Does this mean that such a failure is highly likely in the near future, or are we to believe that as the nation's commercial reactors continue to corrode, crack, and become embrittled, that they become safer? (LRG-S-16-BO-5)

Comment: There are questions of liability that link to accidents. Looking at the cracked tube report that we hold up frequently that was issued through a subcommittee of the Oversight Investigations Committee on Interior and Insular Affairs, … there are a lot of very specific documentations of what the peak early fatalities are projected to be, the peak early injuries, peak cancer deaths, fatality figures, et cetera for individual plants throughout the country, and those numbers are very high [copy of CRACII Report released by Oversight Investigation Committee was provided]. (LRG-S-02-AT-6)

Comment: The GEIS should evaluate the potential accident consequences and not just risk probabilities. Consequences are potentially so catastrophic to the communities surrounding these plants that they must be considered. For example, federal studies estimate that a core melt at ENVY would cause 7,000 peak fatalities within the first year in a 15 mile radius and 17,000 peak cancer fatalities. A spent fuel pool fire could be equally disastrous. (LRG-S-50-L-4)

Comment: The "CRAC-2" Report prepared by Sandia and NRC and issued by the Committee on Interior and Insular Affairs, U.S. House of Representatives, Washington D.C., November 1, 1982, with their added. Comments. Class 9 Accidents, i.e. "meltdown," must be included. (LRG-S-68-L-2)

Comment: We can't be continuously making false assumptions on projecting probabilities of something happening. We have to recognize the fact that if the spent fuel pool, for example, is drained of water in 25 years of research at the NRC, it has demonstrated that there would be a pool fire and a release of radioactivity three times the size of Massachusetts, making Chernobyl look like a picnic. That is the consequence and therefore all measures have to go into it as a result. (LRG-S-17-BO-2)

Comment: The fallacy of the categorization of the size of the impacts -- you know how you have got small, moderate, large? And there is a footnote on this on the last page of the Schedule B-1, Number 3. It is stated in this footnote that when the large categorization is used, the probability of that accident or situation is figured into the categorization process. Therefore, I think that process is flawed and some impacts categorized as small or moderate ought to be categorized, or might be categorized as large if the probability factor were excluded. Apparently, and as far as I can figure out, the probability factor is not used for small or moderate categorization. And if it is not used for small or moderate, it should not be used for large either. And this goes back to something that the Selectman said, that it seems like that in the GEIS that the thought is really for the probability of an accident or something going wrong, as opposed to the consequence, and I think you really need to figure on both of those things. (LRG-S-19-BO-1)

Comment: Further, NRC's "findings" in Table B-1 of Appendix B to Subpart A of 10 CFR 51, regarding postulated accidents, should be clearly presented as "probability weighted" rather than the current misleading presentation. Also, the NRC should reassess the probability factors assigned to certain issues, in consideration of the fact that "improbable" disasters – such as the 9/11 attacks, the rusted hole in the lid of the Davis-Besse reactor, the Columbia space shuttle failure – appear in fact to be occurring with alarming frequency.

More importantly, NRC regulatory action should not be so singularly focused on probability-weighted risk assessments. Table B-1 purports that the consequences from severe accidents would be "small," which, according to NRC's definition therein, may be translated to mean "negligible." Based on this table, it appears that because the Commission continues to insist that an accident is so unlikely, then the consequences of such must necessarily be trivial. This is illogical, and the additional, unnecessary risks that the public face from the license renewal of nuclear plants should not be downplayed as though it were a game of Russian roulette with very good odds of survival. (LRG-S-43-E-2)

Comment: Another 20 years of risks that catastrophic accidents like Three Mile Island may be repeated in our communities, or that another close call like that at Davis-Besse will go too far is unacceptable. (LRG-S-38-E-2), (LRG-S-39-E-3), (LRG-S-40-E-3), (LRG-S-44-E-3), (LRG-S-46-E-2), (LRG-S-47-E-3), (LRG-S-49-E-2), (LRG-S-51-E-3)

Response: *The NRC staff concluded in the 1996 GEIS that the probability-weighted environmental consequences from severe accidents (i.e., beyond design-basis accidents) are small for all plants. See 10 CFR 51.53(c)(3)(ii)(L). This finding will be revisited during the GEIS revision. The revised GEIS will include an assessment of more recent information on severe accidents that could affect the assumptions made in the 1996 GEIS, including information regarding internal and external event core damage frequency, severe accident source terms, and risk impacts of reactor power uprates and higher fuel burn-up levels.*

Comment: Section 5.3.1, Regulatory Interface Between License Renewal and Accident Impacts. In the section concerning accident potential associated with extended operation of nuclear facilities, the GEIS states that effects of age-related degradation will be addressed "by identifying, in an integrated plant assessment process, those structures and components which are susceptible to age-related degradation and whose functions are necessary to ensure that the facility's licensing basis is maintained." Events in recent years demonstrate that this method – mandated by amendments to 10 C.F.R. 54.21 promulgated around the time the GEIS was completed – is not effective to protect against the dangerous ravages of aging on nuclear facilities. Indian Point's broken steam generator tube (2000), Summer's leaking hot leg pipe (2000), Oconee's broken control rod drive mechanism nozzles (2001), Quad Cities' broken jet pump (2002), and Davis-Besse's broken reactor vessel head are good examples of how aging is already taking a toll on nuclear facilities even during their originally-licensed term of operation. We recommend that that GEIS re-examine the potential accident impacts of relicensing in light of evidence of the failure of this policy, and evaluate the benefits of reinstating the age-related degradation unique to license renewal (ARDUTLR) standards to reduce these impacts. (LRG-S-61-E-4)

Response: *The NRC's ongoing safety program focuses on prevention of safety problems so that potential issues like aging and thermal shock do not lead to accidents. The comment*

provides no new information and, therefore, will not be evaluated further. No change will be made to the GEIS as a result of this comment.

Comment: Re-licensing should not be permitted until nuclear plants are required to store their spent fuel in a low-density configuration (to reduce the potential for a spent fuel pool fire). (LRG-S-50-L-6)

Comment: The effects to the lake/river/ocean on which the plant sits, resulting from the rupture of the liner (or other release) from the spent fuel pool, both with and without spent fuel meltdown, should be included - it may require special study, as other studies left the lake/river/ocean/fish etc. out.

Each EIS should be site-specific. (LRG-S-68-L-4)

Response: *The 1996 GEIS did not include an explicit assessment of the environmental impacts of accidents at the spent fuel pools (SFPs) located at each reactor site, but did discuss qualitatively the reasons why accidents at SFPs would be much less than those resulting from reactor accidents. The revised GEIS will include an evaluation of the risk from severe accidents in SFPs relative to the risk from severe accidents in reactors, including a comparison against the findings in the 1996 GEIS.*

Comment: The NRC has gained enough information through License Renewal Applications to date to make a determination, on a generic basis that SAMAs should be classified as Category 1 through this rulemaking process. No age-related cost-effective SAMAs have been identified. In the Federal Register notice outlining the denial of NEI's petition for rulemaking (66 FR 10834; February 20, 2001, at 10838), the NRC stated that "if new information becomes available that indicates it is feasible to reclassify SAMAs to Category I, the staff will notify the Commission and provide a recommendation as to a course of action." To date, 30 units have submitted applications that represent all reactor vendors for renewal of their licenses. Out of those, the NRC has not identified any age-related SAMAs that are cost beneficial. We believe that, through the use of the IPE/IPEEE evaluations and modifications, along with the track record of license renewal applications to date, there exists enough information to reclassify severe accidents as a Category I issue. In addition, draft NUREG DG-1122 is being considered to guide plants in maintaining PRAs up-to-date. Since many of the SAMA questions query the current status of PRA, these questions will no longer be necessary when final regulatory guidance provides for maintaining PRAs current. (LRG-S-59-E-1)

Comment: With respect to Severe Accident Mitigation Alternatives ("SAMAs"), we believe the NRC has gained sufficient knowledge, through individual plant examinations ("IPEs") and IPEs for externally initiated events ("IPEEEs"), as well as from its evaluation of license renewal applications to date, such that it is now able to make a reasonable generic determination that

the evaluation of SAMAs should be re-classified as a Category 1 issue in the updated GEIS. (LRG-S-64-E-1)

Response: *The comments are within the scope of the GEIS and will be considered for the GEIS revision.*

Comment: I will close by quoting just one additional observation from the NRC's "Appendix B to Subpart A [of 10 CFR 51] --- Environmental Effect of Renewing the Operating License of a Nuclear Power Plant."

The NRC staff has concluded that the environmental impacts of design basis accidents are of small significance for all plants. This statement is so unbelievable, it calls into question other staff conclusions. (LRG-S-63-E-12)

Response: *As stated in Section 5.3.2 of the 1996 GEIS, the environmental impact from design basis accidents was assessed in the individual plant-specific EISs at the time of the initial license application review and was determined to be small. Since the licensee is required to maintain the plant within acceptable design and performance criteria, including during any extended life operation, these impacts are not expected to change. The comment provides no new information and, therefore, will not be evaluated further. No change will be made to the GEIS as a result of this comment.*

Comment: There are many significant issues that do in fact require updates under the category of postulated accidents, and it is very clear that the issue of security is something that has to be evaluated. (LRG-S-17-BO-1)

Response: *The NRC's ongoing safety program focuses on prevention of safety problems so that potential issues like security concerns do not lead to accidents. The comment provides no new information and, therefore, will not be evaluated further. No change will be made to the GEIS as a result of this comment.*

Comment: Regarding the size of populations surrounding our nuclear stations, the value of property and the risk of injury from ionizing radiation, that document is extremely outdated. Is the GEIS based on a newer study of accident consequences? Is that document secret? The GEIS should be based on a new public, independent study of accident consequences, funded by those who profit from placing the public at risk. (LRG-S-16-BO-9)

Response: *The NRC staff concluded in the 1996 GEIS that the probability-weighted environmental consequences from severe accidents (i.e., beyond design-basis accidents) are small for all plants. This finding will be revisited during the GEIS revision. The revised GEIS will include an assessment of more recent information on severe accidents that could affect the*

assumptions made in the 1996 GEIS, including information regarding internal and external event core damage frequency, severe accident source terms, and offsite population dose.

Comment: The NRC is reliant on the industry's risk assessment. The NRC has not established standards for probabilistic risk analysis or the PRAs, and must do so. The NRC has also not developed requirements for updating the industry's PRAs, or a process for establishing their accuracy. The quality of the industry's PRAs is currently unknown to the NRC. If a plant manifests serious safety problems, it is at that point that the NRC knows that the PRAs were flawed. This renders the process seriously flawed, while really useless in heading off a potentially serious safety problem. Also, industry assessments are used to legitimize delayed attention to fixing problems, or to side step costly shutdowns to fix safety problems…the process is flawed, as the PRAs submitted to the NRC were flawed. There is no standard. (LRG-S-25-BO-2)

Comment: The technical guidance documents used to calculate ... the trade-off calculations for the SAMA analysis. (LRG-S-53-E-3)

Response: *The use of probabilistic risk analysis (PRA) in the regulatory process has evolved. Actions taken have included the development and implementation of NRC guidance and consensus standards regarding PRA quality (e.g., Regulatory Guide 1.200 and ASME RA-Sb-2005), NRC standardized plant analysis risk (SPAR) models for all operating plants, and NRC tools for determining the risk significance of inspection findings. As stated above, the Revised GEIS will include an assessment of more recent information on severe accidents that could affect the assumptions made in the 1996 GEIS. This will include consideration of information from the SPAR models as well as more recent, updated industry PRAs.*

Comment: Seismic Risks: In California, operating nuclear power plants are located in seismically active areas. Site-specific seismic safety information should be provided to update plant safety and environmental impact analyses in license renewal applications. Because geologists are learning more about earthquake faults and seismic potential on a continuing basis, that new geologic information should be included and considered on a plant-specific basis during license renewal. (LRG-S-60-E-5)

Response: *The NRC staff concluded in the 1996 GEIS that the probability-weighted environmental consequences from severe accidents (i.e., beyond design-basis accidents) are small for all plants. This finding will be revisited during the GEIS revision. The revised GEIS will include an assessment of more recent information on severe accidents that could affect the assumptions made in the 1996 GEIS, including information regarding internal and external event core damage frequency.*

The NRC staff also concluded in the 1996 GEIS that alternatives to mitigate severe accidents, i.e., severe accident mitigation alternatives (SAMAs), must be considered for all plants that have not considered such alternatives. Because SAMA is considered a Category 2 issue, it requires a site-specific evaluation that is performed by the applicant and critically reviewed by the NRC staff. Seismic vulnerabilities were considered site-specifically in the Individual Plant Examination of External Events (IPEEE) study, and are further evaluated in the plant-specific SAMA evaluation for the purpose of identifying potential plant improvements that can further reduce the risk from seismic events.

A.1.1.10 Comments Concerning the Uranium Fuel Cycle and Waste Management

Comment: We need tougher regulation on the Nuclear industry. We need to stop creating nuclear waste and fewer radioactive releases. Force the Nuclear industry to be absolutely safe. (LRG-S-56-E-1)

Response: *The NRC continuously monitors the performance of licensees and operators, including frequent onsite inspections and the use of resident inspectors. The comment is general in nature, and provides no new or significant information. No change will be made to the GEIS as a result of this comment.*

Comment: We've got the situation now where there's this long-term vision of developing Yucca Mountain storage. That's not going to help in terms of offering any reduction on the ISFSI front with Plant Hatch for years because it won't be in place for so long into the future, so when we're looking at relicensing issues and bringing the ISFSI questions up as to how do you handle this we're setting up a parking lot outside the reactor because the spent fuel capacity inside the reactor has been maxed, it's getting ready to be maxed out, as was the case when relicensing was going on we asked a basic question what's going to happen? How are you factoring this in? and we're told we're sorry, it just doesn't relate right here, it's out of scope.

Then our question is where does that get addressed if not through the relicensing process. And so we're very frustrated that we haven't had a mechanism to address those ISFSIs yet with the NRC. (LRG-S-02-AT-9)

Comment: So what to do with the waste, how can that be a separate thing from the relicensing process, how the waste is being handled is just beyond me to understand, so I would suggest that you all make that a much more prominent part of the environmental impact study that's done. It's the really responsible handling of the nuclear waste from the whole process, from the mining of the uranium, and the water that's contaminated in that process, all the way to the disposing of the waste after the fuel rods are removed and stored. (LRG-S-03-AT-6)

Comment: I'm asking you now whether Waste Confidence was ever updated, or will be updated in relation to twenty additional years of reactor operations across the fleet, because the base case scenario that the Department of Energy used for the Yucca Mountain scenarios did not assume license renewal, and there is not currently a second repository program. (LRG-S-04-AT-15)

Comment: Relicensing will result in increased spent fuel storage on-site, and it has not been demonstrated that on-site storage as currently executed is safe. (LRG-S-26-BO-3)

Comment: Twenty more years of operations would clearly produce more wastes of all classes. It is unreasonable to allow continued generation of wastes until a final solution is developed and current waste is transported to it. In the interim safer on-site storage must be required. (LRG-S-26-BO-5)

Comment: Most nuclear facilities store large quantities of irradiated fuel and will continue to store it for many years to come. Recently removed fuel is too hot to be moved to long term storage even if a suitable repository has space available, and this fuel must remain on site. Fuel storage problems will thus not magically disappear when waste hits the roads and rails and tries to make its way to Yucca Mountain. Mitigative measures required by the GEIS must be specified to address this challenge. (LRG-S-28-BO-3)

Comment: The NRC needs to fully evaluate the potential benefits of alternative means of storing so-called spent fuel rods, including hardened dry cask storage as so many other speakers have eloquently mentioned. (LRG-S-29-BO-2)

Comment: There is no solution to the waste problem as we all know, and in fact to start a second generation through the relicensing of reactors when we have not solved the waste from the first generation, except to think of dumping it on Native American land seems ludicrous. (LRG-S-30-BO-7)

Comment: This [license renewal] is unconscionable considering... what to do with the long-lived, toxic waste remains a mystery. (LRG-S-37-E-4)

Comment: An additional 400-600 tons of high-level waste from every re-licensed nuclear reactor - waste that poses unacceptable health and safety risks for generations to come is unacceptable. We must stop creating this waste! (LRG-S-38-E-1; LRG-S-39-E-2; LRG-S-40-E-2; LRG-S-44-E-2; LRG-S-46-E-1; LRG-S-47-E-2; LRG-S-49-E-1; LRG-S-51-E-2; LRG-S-52-E-1)

Comment: History does not evoke confidence in your decisions. On December 5th, 1978 Dr. Joseph Hendrie, Chairman of your agency at that time wrote a letter to Mr. James Schlesinger, Chairman of DOE which stated in part:

"The Commission would not continue to license reactors if it did not have reasonable confidence that the wastes can and will in due course be disposed of safely. Thus, the Commission has itself linked continued reactor licensing and waste disposal. The Commission is committed to reassessing its basis for confidence as new data are developed and progress is made in the federal program." (LRG-S-41-E-4)

Comment: No plants should be re-licensed until there is a permanent solution to the storage of radioactive waste that is up and running. Yucca Mountain, if it is ever built, will not be operating for many years. (LRG-S-50-L-5)

Comment: This is just absurd - you can't re-license plants when you don't have the answer to radioactive waste. (LRG-S-13-LA-16)

Comment: Even in normal, "safe" operations, every nuclear reactor produces between 20 and 30 tons of lethal, high-level radioactive waste every year - waste that will remain radioactive for tens of thousands of years. In addition, reactor facilities produce massive quantities of low-level waste – waste that isn't immediately lethal, but still poses substantial health and environment hazards. There is no known way to safely dispose of any of this waste. Even the controversial Yucca Mountain repository in Nevada isn't designed to accommodate the additional waste that would be generated by extending the life of current reactors by 20 years. (LRG-S-54-E-3)

Comment: For example, generic resolution of the high-level radioactive waste issue through the reliance on the Waste Confidence Decision does not necessarily lead to the timely removal and successful isolation of high-level radioactive waste accumulating on sites located on the shores of the Great Lakes. Confidence can be shaken by reality. (LRG-S-62-E-2)

Comment: Well, there are three reactors with these fuel pools six stories up in the air, and there is already 1,350 tons of spent fuel sitting on that site. And what I have become aware of actually since doing a little research is that for every pound of reactor fuel that is produced there is 4,000 pounds of uranium tailings that are produced in the mining process. (LRG-S-18-BO-1)

Comment: When I was the age of my children, no nuclear power plants existed. When my daughter was growing up they were just beginning to be built. Now there is over 77,000 tons of high-level radioactive waste that still has no safe storage facility and no method of transportation. We, you, cannot turn back the clock, but we can stop the insanity. The future is in your hands. (LRG-S-13-LA-10)

Comment: Lack of Analysis for Nuclear Waste Proliferation and Unfair Treatment of Alternatives and 20-year Extensions

The issues of nuclear waste proliferation are widely recognized as worthy of regulatory attention and public due process within the context of the license extension proceeding. In one of the more obvious examples for such a need, the International Joint Commission called for site specific proceedings for reactors on the Great Lakes.

“All environmental requirements for nuclear reactor facilities call for sufficient on-site storage for high-level wastes, primarily fuel rods. At virtually all nuclear power plants, spent fuel rods continue to accumulate in storage facilities originally intended to be only temporary. The on-going actions by the U.S. government to develop storage facilities in Nevada may mitigate this situation. Under the license renewal guidelines, the on-site storage problem is exempted from consideration in license applications. However, the possibility of radioactive waste discharges to the Great Lakes from breaching of the sites must be considered in the application for license renewal and extension. The issue of security at nuclear power plants has also been raised.”

The supplement environmental impact statements (SEIS) appear unfairly biased. For example, page 6-4 of the SEIS for Calvert Cliffs nuclear power station states, "...in accordance with Commission's Waste Confidence Decision, 10 CFR 51.23, a repository can and likely will be developed at some site..." (LRG-S-62-E-9)

Comment: I am here really speaking on behalf of the Town of Duxbury. We passed a resolution recently at a town meeting requesting that -- and in particular this one was requesting the Pilgrim Power Plant to utilize dry cask storage for its spent nuclear fuel. (LRG-S-22-BO-2)

Comment: I actually have no confidence. As mentioned, a Commissioner in the NRC in a March transcript directing NRR Director Thadani to in a day that you can essentially deep-six the study on spent fuel pool dangers and hazards put out in the Princeton Journal in January. It has given us a lot of trouble, and you can read it, and I think it begins on page 44, number 1. (LRG-S-17-BO-14)

Comment: I believe our nation’s nuclear power plants should be shut down unless and until a safe solution and location can be found for the radioactive wastes already stockpiled nationwide, and unless and until workers assigned to retrofit leaking, corroded, embrittled and outmoded parts can be provided with precise and accurate monitoring equipment and with protective clothing and masks that are impenetrable to radiation. (LRG-S-63-E-6)

Comment: And also I share the concerns about the nuclear waste, and the response I get from Oconee is, well, we just store it on site, and have a capacity to store it until we are given permission, and then it's the Department of Energy responsibility, it's not the utility's

responsibility any more to handle it, so then it goes to a different agency to handle it and they just pay money to handle that.

You know, the so-called Yucca Mountain repository is going to be the solution, but it doesn't have the capacity to handle the waste that we have all around the country from all the different sites right now, and to continue for another twenty years that is an environmental, that is a very serious environmental concern of what is going to happen with all of this waste, and it goes across the board from energy to weapons production, and it's all tied in with from having learned how to navigate atoms this past year and looking at all the things that you all deal with it deals with all of that stuff. (LRG-S-03-AT-5)

Comment: Defense in depth including, but not limited to, containment over highly radioactive spent fuel pools and returning the pools to capacity required in original licenses - no double or triple re-racking. (LRG-S-13-LA-3)

Comment: Your conclusion was that the issue of on-site spent fuel storage was small. Well, that is patently ridiculous. You again are making foolish assumptions. We know that Yucca Mountain is not going to be available at 2015 probably, and there are questions, and there are legal issues involved, issues involving transportation. And I think that Nevada is going to continue to have a Governor and two Senators. So therefore it is not a sure thing. However, even if it were to open, there is no requirement that the licensees send their waste to, and empty all their waste, and empty what they have accumulated for 40 years out there right away.

Even if it were a requirement, they would be unable to do it. As was pointed out by one of the Congressman from Nevada in a Congressional hearing that Yucca Mountain will be filled to capacity in 2032. Then we are going to be in the exact same boat we are in right now, having generated 20 more years worth. So therefore, For relicensing to even be discussed without a requirement of low density pool storage and secured camouflaged dry casks is unconscionable. And that does not mean putting dry casks as you are now up like bowling pins waiting for a strike. They cannot be just 6 feet apart. They have to be separated further so that if you hit one, you don't hit them all. We also in talking about waste management, it was pointed out that in low level waste storage, impacts to the environment will remain small during the term of the license, and there is not going to be impact in apparently the waste community.
Now, where did this radioactive waste fairy come from I ask? No new low level radioactive waste site has been developed. The ones that are existing, like Barnwell, South Carolina, are environmental disasters, unlined pits, and they are gathering evidence of health impacts from what is there now. So to assume that there will be no further impacts is ludicrous. And what guarantee do we have that the sites that now exist will continue to accept our waste? We do not know that by and well we continue to take Massachusetts' waste. So then what? Are the host communities to these reactor sites going to be low level waste dump sites, too? We know

that they are unsuited to be dump sites because of their proximity to water and population. So that has to be reconsidered. The assumptions again are baloney. (LRG-S-17-BO-3)

Comment: One other specific thing that I will talk about, which is a change in—well, since 1996, and really since 1999, too, when the last GEIS and its addendum were issued, is the increase in the amount of spent fuel stored on site.

This is a very specific change, because I think that everyone in the NRC I would hope contemplated many years ago that by the time that we got to 2003 that there was going to be a permanent place for the highly radioactive spent fuel.

And as we all know, there is not. So a really serious change that has happened since 1996 and 1999 is the increase in the amount of spent fuel stored on site, and there is no new way to deal with these amounts. We talked about HOSS, Hardened On-Site Storage, and this is obviously an intermittent solution. So in the GEIS, when you are considering relicensure, we are already in a situation with licensure, and never mind relicensure, where there is no place to put this stuff.

And this has got to be in my opinion a potentially large impact. So I think that this is a serious, serious, change in human environment from '96 to '99 and probably the most important thing that needs to be considered. (LRG-S-19-BO-3)

Comment: The long term storage of highly radioactive waste, and just this evening I picked up a bunch of NRC literature dealing with radioactive waste production, storage, and disposal. And I was noting in here that the candidate site, Yucca Mountain, according to this NRC document, the specs for the containment vessels at Yucca Mountain or wherever the site ends up being at, have to maintain their integrity for between 300 and a thousand years. But the half-life of plutonium 239 is 24,000 years. So we are talking about what to do with the waste long term, I think this is an unsolvable problem…the only thing that can be done at this point is to stop generating power in this totally irresponsible manner. (LRG-S-19-BO-4)

Comment: Clearly any update to the GEIS must revisit the undesirable environmental impacts of expanding the stockpile of irradiated fuel at reactors across the country. Well before the end of their initial license periods, most if not all operating reactors have already inadvisably "reracked" spent fuel pools to cram in more irradiated fuel assemblies. The NRC acknowledged, in NUREG-1738 the potential for a selfigniting fire in densely-racked fuel pools if an accident or attack caused the water to partially drain. A recent independent report published in Princeton's Science and Global Security journal (the "Alvarez study") concluded that a terrorist attack on a high-density fuel pool could result in consequences "significantly worse than those from Chernobyl." (LRG-S-43-E-7)

Comment: The NRC's assessment of offsite radiological impacts of spent fuel and high-level waste disposal, which assumes that the proposed Yucca Mountain repository will open, must also be revised. There continue to be problematic uncertainties in surmising the environmental impacts of this project over its lifetime. These uncertainties can be expected to be magnified if additional waste from 20-year relicensed reactors were somehow crammed into the proposed facility (a scenario that is illegal under current law), particularly since this was not anticipated by the Department of Energy (DOE) in the Yucca Mountain Environmental Impact Statement. Faced with such uncertainties, for the purposes of the GEIS, the NRC should apply the precautionary principle and conservatively assess risks both of dumping this waste in a repository and of indefinitely storing it onsite at reactors. (LRG-S-43-E-9)

Comment: There is no known way to safely dispose of any of this waste. For high-level waste, the industry and government are hoping to put the waste into the controversial Yucca Mountain repository in Nevada – but this plan does not account for additional waste that would be generated by reactors with a 20-year license extension. For low-level waste, the industry and government are attempting to deregulate much of the waste, and even allowing it to be "recycled" into everyday consumer goods such as frying pans and bedsprings. Every license renewal would, in effect, equal 400-600 additional tons of nuclear waste for which there is no viable disposal method. (LRG-S-48-E-1)

Comment: Accumulation of Spent Nuclear Fuel Onsite: The long-term risk of extended onsite storage and accumulation of spent fuel should be evaluated given the uncertainties regarding when a permanent repository or offsite interim storage facility will become available. Plant-specific estimates of the total volume of spent fuel that could be stored onsite in wet and dry storage should be provided. (LRG-S-60-E-4)

Comment: Even if they were cheap, however, and clean and safe, no technology or location has been found to isolate radioactive wastes for the requisite millennia. The longer nuclear power plants operate in the United States, the greater will be the waste burden.

Even the oldest radioactive wastes of the Atomic Age, those that were generated right here in St. Louis, starting in April 1942, still have no place to go. (LRG-S-63-E-2)

Comment: I believe our nation's nuclear power plants should be shut down unless and until a safe solution and location can be found for the radioactive wastes already stockpiled nationwide. (LRG-S-63-E-5)

Comment: Storage of Spent Fuel

Section 6.4.6.7 of the Generic EIS (GEIS) concludes, "On-site storage of spent fuel during the term of a renewed operating license is a Category 1 issue." Therefore, site-specific information

on spent fuel storage is not provided in the Supplemental EIS for individual plants. While there are generic aspects to on-site fuel storage that are adequately discussed in the GEIS, we recommend that certain issues associated with the on-site storage of spent fuels be addressed in the Supplemental EIS prepared for each facility. These include the current status of storage capacity at a facility and the plans for storage of the additional spent fuel to be generated during the term of the renewed license. These are clearly impacts of continued operation and will vary from facility to facility. The GEIS should not preclude the disclosure of this information during the license renewal process by deeming all discussion of on-site storage as a Category 1 issue. (LRG-S-65-E-1)

Comment: My concern is the waste which is being produced and will necessarily be stored permanently on-site since no other option is available. Adequately safe storage options on-site are being considered. Allowing Diablo to continue to operate beyond 2006 and produce additional waste for which there is not presently even any room or an agreed-upon way to store it, would not be prudent. (LRG-S-34-E-1)

Comment: How does that [the President's initiative regarding Yucca Mountain] play into this? Does that mean that you are assuming Yucca Mountain will occur in updating this? What did that mean exactly when you mentioned Yucca Mountain? (LRG-S-14-LA-1)

Comment: Since the Diablo Canyon Nuclear Power Plant is already in operation in SLO County and has already piled up vast amounts of High Level Nuclear Waste on its site and for as long as the plant continues to operate despite of the GREEN Party's position the SLO GREEN Party feels compelled to offer the following comments:

The SLO GREEN Party generally agrees with the comments as filed by SLO Mothers for Peace and make them part of ours. We also refer to our comments as submitted on 3-24-03 to NRC's Atomic Safety and Licensing Board. (LRG-S-66-E-2)

Comment: Section 6.4, Generation and Storage of Radioactive Waste During the Term of the Renewed License. Under the Waste Confidence Rule, 10 C.F.R. 51.23, the NRC has determined that: (a) spent fuel can be stored in on-site storage facilities “safely and without significant environmental impacts” for at least 30 years beyond the operation of a nuclear power plant, (b) that at least one permanent repository will be opened within the first quarter of the 21st century, and (c) that sufficient repository capacity will be available within 30 years of the licensed life of any reactor to permanently store all of the spent fuel from such reactors. The GEIS then concludes that the additional spent fuel created during any license renewal period can be stored on-site “safely and without environmental impacts.” The NRC should reconsider the Waste Confidence Rule and revise the GEIS analysis of this issue for three reasons. First, the heightened threat of terrorist attacks on U.S. soil since September 11, 2001 (see Section 2.e below) calls into question the Waste Confidence Rule’s conclusion that spent fuel can be

safely stored in on-site spent fuel pools for 30 or more years after a plant's license expires. Second, there are not sufficient grounds for the NRC to be confident that sufficient repository capacity will be available to store all spent fuel within 30 years of the license life of each reactor. Even assuming that the Yucca Mountain repository receives final approval, it would not begin receiving spent fuel until at least 2010, nearly 30 years after consideration of the repository first began. Yucca Mountain would not have the capacity to store all existing spent fuel, much less additional fuel created during any license renewal periods. Therefore, an additional one or two repositories would be needed, yet no additional repositories are currently even under consideration. Given the lengthy and still not concluded struggle over the Yucca Mountain site, the NRC should not assume that additional repositories will be approved in a timely fashion. Third, the GEIS acknowledges that the on-site storage pools are reaching their capacity at many facilities, requiring those facilities to either expand their storage pools or ship the spent fuel to other facilities. License renewals at a plant facing a full storage pool would only exacerbate the problem, thereby raising questions about the safety and environmental impact of storing spent fuel generated during any license renewal period. This issue relies heavily on the storage pool capacity at each facility and, therefore, should be considered in supplemental EISs for each license renewal application. (LRG-S-61-E-6)

Response: *The NRC is committed to ensuring that both spent nuclear fuel and low-level radioactive wastes are managed to prevent health impacts to the public. Spent nuclear fuel is currently stored at reactor sites in the spent fuel pools and/or in a independent spent fuel storage installations (ISFSIs). This practice is expected to continue until DOE is ready to take possession of the spent nuclear fuel. At this time, it is uncertain when this will happen.*

Interim storage needs vary among plants, with older units having less available pool storage capacity than newer ones. However, given the uncertainty as to when a geologic repository will open and lack of other options, it is likely that some sort of expanded spent fuel storage capacity beyond the original design capacity will be needed at all nuclear power plants.

Under the Waste Confidence Rule (see below), the NRC determined that spent nuclear fuel can be safely stored onsite for at least 30 years beyond the operating life of nuclear power plants including the renewal term with minimal environmental impact. This decision does not address the environmental impacts of storage during the current license term or the additional 20 years of operation after license renewal. The impacts of storing spent nuclear fuel when the reactor is operating are addressed on an ongoing basis as part of reactor operations or under a separate license for an ISFSI.

Current and potential environmental impacts from spent fuel storage onsite at the current reactor sites have been studied extensively by the NRC and are well understood. The storage of spent nuclear fuel in spent fuel pools was considered for each plant in the safety and environmental reviews at the construction permit and operating license stage. The NRC

studied the safety and environmental effects from storage of spent nuclear fuel after a reactor ceases operations and published a generic determination of no significant environmental impact in 10 CFR Part 51.23. 10 CFR 51.23 (a) states:

> *The Commission has made a generic determination that, if necessary, spent fuel generated in any reactor can be stored safely and without significant environmental impact for at least 30 years beyond the licensed life for operation (which may include the term of a revised or renewed license) of that reactor at its spent-fuel storage basin or at either on-site or off-site independent fuel storage installations. Further, the Commission believes there is reasonable assurance that at least one mined geological repository will be available within the first quarter of the twenty-first century, and sufficient repository capacity will be available within 30 years beyond the licensed life for operation of any reactor to dispose of the commercial high-level waste and spent fuel originating in such reactor and generated up to that time.*

In accordance with this determination, no discussion is required concerning the environmental impacts of spent fuel storage for the period following the term of the reactor operating license, including a renewed license. The Waste Confidence Rule was first published on August 31, 1984 in 49 FR 34694, and was amended on September 18, 1990 in 55 FR 38474 and on August 28, 2007 in 72 FR 49509. In a Federal Register Notice published on October 9, 2008, the Commission announced that it is "proposing to revise its generic determination on the environmental impacts of storage of spent fuel at, or away from, reactor sites after the expiration of reactor operating licenses" (73 FR 59547). In the revision, the Commission "proposes to find that, if necessary, spent fuel generated in any reactor can be stored safely and without significant environmental impacts beyond the licensed life for operation (which may include the term of a revised or renewed license) of that reactor at its spent fuel storage basin or at either onsite or offsite independent spent fuel storage installations (ISFSIs) until a disposal facility can reasonably be expected to be available." The comments provide no new information and will not be evaluated further.

Comment: Transportation is related. When these storage facilities are set up which we call DOMs, they are little dump sites that are not that little, they're highly dangerous sites, when you set these up you're looking at transportation at some point down the road which affects a lot of points in Georgia out beyond the reactor community. So that was another question I think was sort of pushed aside that's not an issue for relicensing to look at. (LRG-S-02-AT-10)

Comment: Recently there was a train accident in the City of Commerce. Four houses were demolished when the train left the tracks. It is impossible to fathom what would have happened if radioactive waste had been on that train. (LRG-S-13-LA-5)

Comment: This [long-term storage of nuclear waste] is also an issue of safe transport, safe storage for a period of time beyond most of our comprehension. A period of time that neither this agency nor any other agency is able to guarantee will remain safe. (LRG-S-13-LA-1)

Comment: California is concerned about transportation issues as well. (LRG-S-14-LA-2)

Comment: To protect them [the public] from the production of tons of high-level radioactive waste, they will either need to be transported somewhere or be left in earthquake prone coastal zones. (LRG-S-13-LA-15)

Comment: Transportation. Currently over 7 million Californians live within one mile of proposed routes. (LRG-S-13-LA-4)

Response: *The regulations for the transportation of radioactive material are located in the NRC regulations, 10 CFR Part 71, and the Department of Transportation regulations, 40 CFR 173. Compliance with these requirements will not be altered by license renewal. Transportation casks are designed to withstand severe accidents involving impact, puncture, fire, and submersion. See NUREG/BR-0292,* Safety of Spent Fuel Transportation*, for more information. The Commission has made the determination that spent fuel generated in any reactor can be stored safely and without significant environmental impacts for at least 30 years beyond the licensed life for operation (which may include the term of a revised or renewed license) of that reactor at its spent fuel storage basin or at either onsite or offsite independent spent fuel storage installations. The comments provide no new information and, therefore, will not be evaluated further. No change will be made to the GEIS as a result of these comments.*

Comment: The related issue of transporting nuclear waste generated as a result of 20-year license extensions to a proposed repository or other off-site storage facility similarly deserves more detailed attention. The NRC should insist that the DOE provide detailed routing scenarios for transporting this waste, then evaluate the specific health, safety, security, and environmental justice consequences involved. (LRG-S-43-E-10)

Comment: Transportation Impacts: The environmental review should evaluate the potential transportation impacts from the increased number of spent fuel shipments that will result from extended plant operation. Spent fuel from California nuclear power plants will be transported to a repository or offsite storage facility by truck, rail and/or barge. Although the U.S. Department of Energy's Final Environmental Impact Statement for the Yucca Mt. Repository discusses the potential impacts from transporting spent fuel to the repository, there is no route-specific evaluation of potential impacts. The environmental review should evaluate the site-specific and route-specific transportation impacts from the planned spent fuel shipments offsite. (LRG-S-60-E-8)

Comment: Changed circumstances since 1996 requiring revised analysis. The GEIS states that "[c]urrently, the only spent-fuel shipments from nuclear plants are to other plants." This statement will clearly no longer be accurate once Yucca Mountain opens as a waste repository, an eventuality made substantially more likely by last year's decision by Congress to approve a DOE application for that site. To the extent that waste created during the license renewal period will be shipped to Yucca Mountain – not a certainty given severe constraints on the site's capacity (see Section 2.d below), but nonetheless a possibility – the environmental impacts of these shipments need to be considered in the EIS process. (LRG-S-61-E-2)

Comment: Since 1996, when the current version of the license renewal GEIS was finalized, numerous circumstances relevant to the GEIS analysis have shifted. We have listed below the major areas in which the document needs to be revised to reflect these shifts.

A. Section 2.2.4.4, Transportation of Radioactive Materials….These impacts should be evaluated as a Category 2 issue, considered separately at each site, because the impacts of off-site transportation will vary from location to location, depending on population, ecological sensitivity, etc. (LRG-S-61-E-3)

Response: *The impacts of transporting spent nuclear fuel from reactor sites to the proposed repository at Yucca Mountain are addressed in U.S. Department of Energy's (DOE's) Final and Supplemental Environmental Impact Statements for a "Geologic Repository for the Disposal of Spent Nuclear Fuel and High-Level Radioactive Waste at Yucca Mountain, Nye County, Nevada" (Yucca Mountain FEIS, February 2002 and Repository SEIS, June 2008). The Yucca Mountain FEIS and Repository SEIS provide estimates of state-specific transportation impacts and representative transportation routes for 44 states and the District of Columbia. DOE identified representative highway routes in accordance with U.S. Department of Transportation routing regulations (49 CFR 397, Part D), which require the use of preferred routes (Interstate System highway, beltway or bypass, or state or tribal designated alternate) that reduce time in transit. Since it will be many years before shipments could begin, DOE cannot determine the exact routes that would be used for shipments to Yucca Mountain. Construction and modification of highways may require changes to preferred routes, and states and tribes may designate alternate preferred highway routes in the interim.*

The NRC has conducted several studies to evaluate the risks associated with the transportation of radioactive material. The NRC issued Final Environmental Statement on the Transportation of Radioactive Material by Air and Other Modes, NUREG-0170 (NRC 1977b), which was published in 1977 to support the 10 CFR Part 71, "Packaging and Transportation of Radioactive Material" rulemaking. Based on the NRC staff's recommendations in NUREG-0170, the Commission concluded that the transportation regulations are adequate to protect the public from the risks associated with the transportation of radioactive materials, including spent nuclear fuel. The NRC sponsored another study in the 1980s titled Shipping Container

Response to Severe Highway and Railway Accident Conditions, NUREG/CR-4829 (Fischer et al. 1987), also known as the "Modal Study." Based on the results of NUREG/CR-4829, the NRC staff concluded that NUREG-0170 overestimated spent fuel accident risks by about a factor of three. In the 1990s, the NRC initiated a spent fuel study titled Reexamination of Spent Fuel Shipment Risk Estimates, NUREG/CR-6672, which was published in 2000 (Sprung et al. 2000). NUREG/CR-6672 focused on the risks of a modern spent fuel transport campaign from reactor sites to possible interim storage sites and/or permanent geologic repositories. This study concluded that accident risks were much less than those estimated in NUREG-0170 and that more than 99.99 percent of transportation accidents are not severe enough to cause a release of radioactive material from a NRC-certified spent fuel cask. While very severe accidents could cause cask damage, the studies show that releases of material would be small and pose little risk to the local population/public. The most severe accidents might cause greater releases, but their likelihood is so remote that the NRC considers the risk to public health to be low.

The NRC has also sponsored studies to analyze the consequences of specific accident scenarios on rail and truck transportation casks carrying spent fuel. For example, the NRC undertook an investigation of a July 2001 accident that involved a freight train carrying hazardous materials that derailed and caught fire while passing through the Howard Street railroad tunnel in downtown Baltimore, Maryland, to determine the possible regulatory implications of this particular event for the transportation of spent fuel by railroad. The NRC assembled a team of experts from the National Institute of Standards (PNNL) to determine the thermal conditions that existed in the Howard Street tunnel fire and to analyze the effects of this fire on various spent fuel transportation cask designs. The staff concluded that the spent fuel transportation casks analyzed would withstand a fire with thermal conditions similar to those that existed in the Baltimore tunnel fire event. No release of radioactive materials would result from exposure of the casks analyzed to such an event. No change will be made to the GEIS as a result of these comments.

Comment: The classification system for radioactive wastes fails to serve the public interest because the classification is based on how waste is generated, and not on how toxic or how long-lived it is. Therefore, dangerous and very long lived radionuclides are in so-called low level radioactive wastes. Wastes need to be reclassified according to longevity and toxicity. (LRG-S-26-BO-4)

Response: *The NRC has established regulations for the classification of radioactive wastes which are protective of public health and safety and the environment. Any changes to these regulations will be made in accordance with the rulemaking process. No changes will be made to the GEIS as a result of this comment.*

Comment: Spent fuel pools were designed for a certain capacity by "Experts." The design was gutted and the pools were densely compacted. (LRG-S-41-E-1)

Response: *The design of a spent fuel pool is outside the scope of this environmental review. The design of a spent fuel pool has its own separate licensing action, performed when the pool is designed or modified in some manner. The design of a spent fuel pool is considered outside the scope of this environmental review and, therefore, will not be evaluated further.*

Comment: Regarding nuclear waste issues, I question NRC's "findings" on the risks and dangers posed by nuclear waste that is produced at reactor facilities. For low-level waste storage and disposal, mixed waste storage and disposal, radiation doses, and offsite radiological impacts, the anticipated consequences are all listed as "small." Considering that substantial quantities of low-level waste are produced each year at nuclear power plants, and that the NRC is currently conducting a rulemaking which could allow massive quantities of radioactively-contaminated waste materials to be released without restriction and "recycled" (above and beyond the current "case-by-case" releases that NRC allows) into everyday consumer products, these assessments of "small" consequences are irresponsible. (LRG-S-43-E-5)

Comment: Where is the evidence for reasonable assurance that sufficient low level waste disposal capacity will be made available? (LRG-S-16-BO-15)

Response: *Management of wastes generated during the operation of a nuclear reactor is part of the licensing basis of the facility. Impacts associated with waste management during operations are addressed in the 1996 GEIS and will be addressed in the GEIS revision. They are also evaluated on a plant-specific basis in the supplements to the GEIS for specific license renewal applications. The comments provide no new information and, therefore, will not be evaluated further.*

Comment: The proposed Yucca Mountain, Nevada, site, [is] an area prone to earthquakes and volcanoes, and revered by the Western Shoshone who have lived there for generations. If the Nuclear Regulatory Commission were to approve the Yucca Mountain site, and if the repository were to be built and become operable, it is estimated my hometown would have to accept one shipment of high-level waste every other day, on the average, for the next thirty years. (LRG-S-63-E-4)

Response: *Presently, the NRC is reviewing an application from the DOE to construct, operate, monitor, and eventually close a high-level waste geologic repository at Yucca Mountain in Nye County, Nevada. As part of its application, DOE submitted an environmental impact statement that considers and evaluates the environmental impacts of the Yucca Mountain facility and the transport of spent nuclear fuel on the environment. Information about DOE's Yucca Mountain*

Project and the environmental documents are available on the Internet at http://www.ocrwm.doe.gov. Refer to the NRC's Web site at http://www.nrc.gov/waste/hlw-disposal/yucca-lic-app.html for more information on the NRC's review. The proposed Yucca Mountain site is considered outside the scope of this environmental review and, therefore, will not be evaluated further.

Comment: If the waste products cannot be used, then the industry needs to be phased out and replaced consciously and methodically by a sustainable industry. (LRG-S-67-E-5)

Response: *Complete recycling and reuse of waste materials is a goal, however, it is not feasible at this time for the production of nuclear energy at existing reactors. The DOE has initiated a new program, Global Nuclear Energy Partnership (GNEP), which aims to recycle a major fraction of the spent nuclear fuel. However, GNEP is currently in the early planning stages. The comments provide no new information and, therefore, will not be evaluated further.*

Comment: On-Site Storage of Low-Level Radioactive Waste

Since the date of the GEIS finalization (1996), the situation regarding future capacity for LLRW disposal has changed. It can no longer be assumed that additional disposal facilities will be developed during the term of the renewed licenses. We recommend that the NRC update the discussion of on-site LLRW storage in the GEIS. (LRG-S-65-E-2)

Response: *Environmental impacts associated with low-level radioactive waste generated by nuclear power plants are discussed in Chapter 6 of the 1996 GEIS. The NRC will reconsider the information in Chapter 6 as part of the GEIS revision. The comments provide no new information and, therefore, will not be evaluated further.*

A.1.1.11 Comments Concerning Decommissioning

Comment: Decommissioning. Waste management small. Decommissioning at the end of a 20 year license renewal period would generate no more waste than the end of the current license. Now, where did that come from? Again, where is the radioactive waste fairy? This is a fiction. It is clear that 20 more years of generation is going to be producing more waste. (LRG-S-17-BO-4)

Response: *Impacts related to the uranium fuel cycle and solid waste management will be addressed in the revised GEIS. Generation and management of solid nonradioactive waste during the terms of extended license are not expected to result in significant environmental impacts. No changes to plant systems or mode of operation have been identified that would increase the quantities of waste generated or change the nature and types of waste in a manner that would be of environmental concern. In fact, regulatory and operational trends*

suggest a gradual decrease in quantities generated annually and the impacts during the terms of renewed licenses. Facilities and procedures are in place to ensure continued proper handling and disposal at all plants. Consequently, the generation and management of solid nonradioactive waste for up to 20 years beyond the terms of the original 40-year license of nuclear power plants are anticipated to result in only small impacts to the environment. The siting and construction of a national waste repository are the responsibility of the DOE. The Commission believes there is reasonable assurance that at least one mined geologic repository will be available within the first quarter of the 21st century (10 CFR Part 51.23). The amount of wastes generated by the decommissioning process itself (i.e., removal of equipment, pipes, buildings, etc.) would not appreciably change with or without license renewal. The comment provides no new information and, therefore, will not be evaluated further. No change will be made to the GEIS as a result of this comment.

A.1.1.12 Comments Concerning the License Renewal Process

Comment: And so here we are today wondering what the scope of this really is. The kind of separation that occurs in putting issues in categories has been very challenging for us to even follow, and to know where is the opportunity when you're looking at a site-specific review and you're raising these profound questions of environmental impact, and safety impact, and a host of other impacts, including economic, when we're told that's really outside the scope we're wondering where are we supposed to provide that concern then, because each plant is being brought up in an individual basis for review and ultimate approval, and as has been said there really hasn't been one denied yet it just raises concerns for us as to what the real process is, and the public has -- we're not alone. There are other public commentors that raise concerns. And honestly in looking at the results, the findings that the agency came out with we felt that our basic concerns were not addressed, and we were very dissatisfied by the analysis provided back to the public of this or that concern has been taken up by the agency and this is how the agency feels the problem fits in. (LRG-S-02-AT-3)

Response: *The current process is the public's opportunity to bring issues and concerns to the NRC's attention, provide new data, and discuss system-wide environmental issues that may apply to more than one individual plant. Classifying issues as Category 1 and Category 2 is designed to make the overall review process more efficient by dealing with those impacts that are similar for all plants at one time, so that reviews of individual power plants need focus only on those environmental effects that are unique to that plant or exceptional in size and scope for those issues ordinarily assumed to be similar for all plants. The comment provides no new information and, therefore, will not be evaluated further. No change will be made to the GEIS as a result of this comment.*

Comment: Concerns about how everything has been compartmentalized within the Nuclear Regulatory Commission and other agencies, the Department of Energy, and Department of

Defense, and all of these agencies that are related to the whole atomic energy/atomic weapons scenario which I feel like are so tightly connected. (LRG-S-03-AT-2)

Comment: I have never been to a meeting where NRC was present where they have forgotten to say that they were neutral about nuclear power. Never. You have always said that, always.

And I have never been to a meeting where you have said you are neutral, neither pro or con about nuclear power in which you haven't said pleased and positive things about nuclear power…I don't want to hear any of you say nuclear power is so economical. These are published in your statements, you need to strike them from anything you write because it's your role to appear to be nonpartisan to the public, and you are answerable to the public.

You need to get your industry-friendly jargon out of your minds before you come and see us, because you're not the industry, and we don't need to talk to you like the industry. We are stakeholders, so please take that into consideration. (LRG-S-06-AT-3)

Comment: We need to hear the word "safe," like we need to hear the word economical because we just need a neutral stance [on the part of the NRC]. (LRG-S-06-AT-10)

Comment: But I think what I am most struck by being in this room tonight is this sense of being at this diminishing point in our relationship with the NRC. That there is this profound attachment between the regulators of nuclear power and what they are considering, and moving forward with this bureaucratic process that you have been put on by the mandate of the Commission that is completely out of step with where the public is, in terms of where in fact the issue of nuclear power is in this country.

And that this is going to come to a screeching halt sometime soon either by catastrophe or by mandate of Congress, and I am really wondering what the point is to moving forward with relation to this GEIS at this point given the state that we are in. (LRG-S-18-BO-3)

Response: *The perceived compartmentalization is a result of a series of U.S. Federal laws and regulations that apportion the responsibility for nuclear-related activities among Federal agencies and the States. The mission of the NRC includes the protection of public health, safety, and the environment. The Energy Reorganization Act of 1974 established the Nuclear Regulatory Commission. Previously, under the Atomic Energy Act of 1954, a single agency, the Atomic Energy Commission, had responsibility for the development and production of nuclear weapons and for both the development and the safety regulation of the civilian uses of nuclear materials. The Act of 1974 split these functions, assigning to one agency, now DOE, the responsibility for the development and production of nuclear weapons, promotion of nuclear power, and other energy-related work. The NRC was assigned the regulatory work associated with the civilian use of nuclear materials. The President's Reorganization Plan No. 3 of 1970*

established the EPA and gave it a role in establishing "generally applicable environmental standards for the protection of the general environment from radioactive material." The Nuclear Waste Policy Act (NWPA) of 1982, as amended, establishes both the Federal government's responsibility to provide a place for the permanent disposal of high-level radioactive waste and spent nuclear fuel, and the generators' responsibility to bear the costs of permanent disposal. Amendments to the NWPA have focused the Federal government's efforts, through the DOE, on studying a possible site at Yucca Mountain, Nevada.

Presently, the NRC is considering a licensing request from DOE for the disposal of high-level nuclear waste at Yucca Mountain, Nevada. Refer to the NRC's Web site at www.nrc.gov for more information on this license review.

Comment: There is a clear and obvious, and disgusting conflict of interest regarding the way that the NRC is set up, which is that you guys are all paid for by the industry. If you refuse a license and you refuse a utility operator a license that is less money for the NRC. So that is totally bogus. (LRG-S-16-BO-17)

Response: *Consistent with the requirements of the Omnibus Budget Reconciliation Act of 1990, as amended, fees are collected from licensees and license applicants to offset approximately 90 percent of NRC's budget. Additional information on licensing fees is available at: http://www.nrc.gov/about-nrc/regulatory/licensing/fees.html. The comment provides no new information and, therefore, will not be evaluated further.*

Comment: So this interaction between the public getting involved in Yankee-Rowe, the industry doing what it does to generate electricity, and collect money, and pay your bills results in what, a rule that simply assumes that everything is okay until and unless it fails. (LRG-S-04-AT-6)

Comment: There was an interesting thing that happened with Yankee-Rowe in the initial consideration of license renewal, and I think we really have to take this update opportunity on the GEIS of license renewal to reflect on the response, but you know it's like a dance, you know it's like you do something, we do something, you do something, the industry does something, we do something. It's a dance, and you know the public really got involved in Yankee-Rowe, and different things happened than anyone thought was going to happen.

So we then have to look at what NRC did. And quite frankly your rules are not anticipating the problems that are occurring.

In honor of Jess Riley who was one of our members who I represented in the license intervention for the Duke reactors I have to say that he was quite right in saying that the NRC's regulations do not anticipate what you don't anticipate. (LRG-S-04-AT-5)

Response: *The licensee of Yankee Rowe considered applying for renewal of its operating license but discovered safety problems in the initial phases of its investigation and terminated the action. The Yankee Rowe decision has not affected the license renewal process. While it is not possible for the NRC to anticipate every problem with operating reactors, the NRC assesses plant performance continuously and communicates its assessment of plant performance in letters to licensees, typically semi-annually. The assessment program collects information from inspections and performance indicators (PIs) to enable the agency to arrive at objective conclusions about the licensee's safety performance. Assessment letters are available on the plant performance summary page for each plant, and are posted on this Web site as they become available. More detailed information on the NRC's assessment process is available in Inspection Manual Chapter 0305, "Operating Reactor Assessment Program," available at the NRC's Web site. The NRC determines its regulatory response in accordance with an Action Matrix that provides for a range of actions commensurate with the significance of the PI and inspection results. Findings are color-coded for significance to safety. For a plant that has all of its PIs and inspection findings characterized as having very low safety significance ("green"), the NRC will implement only its baseline inspection program. For plants that do not have all green PIs and inspection findings, the NRC will perform additional inspections and initiate other actions commensurate with the safety significance of the issues. The comments provide no new information and, therefore, will not be evaluated further. No change to the GEIS will be made as a result of these comments.*

Comment: We believe that if the industry is following its mandate to protect public health and safety and to limit the liability of the industry and do the industry a favor you should shorten the operating licenses to 25 years and facilitate either phase-out or, you know, if they're trying to get new ones we'll see if that works. (LRG-S-04-AT-9)

Response: *The original licenses for commercial nuclear power facilities were granted for a 40-year period, which was set by the Atomic Energy Act of 1954 and the NRC's regulations. It was imposed for economic and antitrust reasons rather than technical limitations of the nuclear facility. Studies and experience to date have shown that commercial nuclear power facilities can be safely operated for more than 40 years. The NRC regulations allow owners of nuclear power reactors to seek license renewal for up to an additional 20 years with no limitations on the number of times the license may be renewed. The decision of whether to seek license renewal rests entirely with the owners of the nuclear power reactor, and it is typically based on the plant's economic viability and whether it can continue to meet NRC safety and environmental requirements. The NRC bases its license renewal decision on whether the facility will continue to meet the requirements for safe operation and whether the protection of the environment can be assured.*

Comment: I don't know why the Nuclear Regulatory Commission decided to do a generic treatment of plutonium fuel, but you all did. You have rules for anybody who builds a plutonium fuel factory, so what about Table B-1? It only applies to LEU [low-enriched uranium] I need to remind you. It's not that I'm endorsing plutonium fuel, but I am suggesting that uranium has no bearing on plutonium. (LRG-S-04-AT-13)

Response: *Table B-1 in 10 CFR 51 Subpart A, Appendix B contains a summary of findings on environmental issues for license renewal of nuclear power plants, such as the uranium fuel cycle and human health issues. The commenter is correct in stating that Table B-1 does not include a generic evaluation of the plutonium fuel cycle. The use of mixed-oxide fuel, which is a combination of highly enriched uranium and plutonium, is not presently permitted in a U.S. power reactor without special licensing provisions. For more information on the regulation of mixed-oxide fuel, see the NRC Web site at http://www.nrc.gov/materials/fuel-cycle-fac/mox/licensing.html#1. The use of mixed-oxide fuel is considered outside the scope of this environmental review and, therefore, will not be evaluated further.*

Comment: If I could just get clarity on -- you mentioned two categories, Category 1 and Category 2. Who determines those categories? (LRG-S-05-AT-1)

Response: *The impact evaluation performed by the NRC staff and presented in the GEIS identified 92 environmental issues that were associated with the renewal of commercial reactor licenses in the United States. These categories and the associated environmental issues were determined by the NRC with input from industry, Federal, State, and local governmental agencies, members of the public, and citizen groups during the preparation of the GEIS.*

Comment: The GEIS needs to be upended to allow it to be generic. Actually I don't like it... Generic places important aspects out of reach of merely the stakeholders, and that's the sensibility that's an important aspect to any nuclear process' accessibility to the process by the stakeholders that are local to the plant. (LRG-S-06-AT-8)

Response: *A generic environmental impact statement is an environmental impact statement that assesses the scope and impact of environmental effects that are common to many nuclear plant sites. For license renewal, the NRC issued a GEIS that assesses the scope and impact of environmental effects that are common to all existing U.S. nuclear power plants. The GEIS identifies impact issues that were resolved generically and identifies impact issues requiring plant-specific analysis. A plant-specific supplemental EIS (SEIS) updates and/or supplements the information in the GEIS. For license renewal, the Commission directed the NRC staff to issue plant-specific supplements to the GEIS for each license renewal application. Preparation of these plant-specific supplements requires the evaluation of all the environmental issues including the generic impact issues addressed in the GEIS. During preparation of these*

supplements, input is gathered from a wide variety of sources including Federal and State agencies, local authorities, the public, and other stakeholders.

Comment: When decisions are made around relicensing the outcome in the Hatch relicensing was from the NRC saying specifically that federal agencies other than NRC, and state regulatory agencies, and owners of plants will ultimately decide whether the plant will continue to operate.

At the State when we talk to them about this if they have the authority to move to get these plants closed on a reasonable time line they indicate that that's really the NRC's purview, that that's really outside their control.

So when you go through this relicensing and look at impacts and such and come out with findings if you can offer something for the states to actually work with, something concrete that lays out here's what options you have that's very clear to them, because they act like it's very confusing.

They may know full well that they have the ability to take care of these problems, but they kind of put their hands up and say we can't do too much here. (LRG-S-02-AT-8)

Response: *Although a licensee must renew its license to operate a reactor beyond the term of the existing license, the possession of a renewed license is just one of a number of conditions that must be met to continue operation. Once a license is renewed, other factors and entities such as State regulatory agencies and the owners of the nuclear power facility will ultimately decide whether the facility will continue to operate. Whether or not the facility will continue to operate is based on factors such as the need for power or other matters within the State's jurisdiction or the financial interests of the owners.*

Comment: 10 CFR 51.53(c)(2): The Service believes that the environmental analysis should not be limited to proposed modifications, but should address the continuation of project operations as a new commitment of resources. As such, the analysis should consider as its baseline, the status of environmental resources without the project. Effects of the project from that point in time should be avoided to the extent possible and minimize through the development and implementation of specific project features and operations. Appropriate mitigation for all unavoidable project effects on fish and wildlife resources should be developed in early consultation stages with the applicable resource agencies and included in the preferred alternative. (LRG-S-58-L-7)

Response: *The GEIS and site-specific SEISs evaluate not only the impacts of proposed modifications (refurbishment), but also the impacts of continued operations over the license renewal period. Where considered appropriate, mitigation to reduce the magnitude of*

environmental impacts is recommended in individual SEISs. The comment provides no new information and, therefore, will not be evaluated further. No change will be made to the GEIS as a result of this comment.

Comment: The scope of the GEIS needs to either expand or be qualified to include impacts from contemplated continued operation of the plant. In other words, if there is a relicensure procedure, and I think the maximum relicensure procedure or time rather is 20 years, if the plant is relicensed for, say, 10 years after its 40 year license time, the impacts considered in the GEIS need to take into account the contemplated impacts for the extra licensure time, and not just the contemplated impacts during refurbishment time. And you could do that by using each of the 92 issues and having a section for refurbishment period and a section for additional contemplated licensure time. (LRG-S-19-BO-2)

Comment: The renewed license process has not included in it evaluation a plant's operating experience. (LRG-S-25-BO-7)

Response: *The GEIS evaluates the environmental impacts of continued operation of nuclear power plants for up to 20 years after expiration of a plant's current operating license. Refurbishment impacts are considered if refurbishment is planned during the renewal period, but the evaluation is not limited to a consideration of refurbishment impacts. Additionally, by conducting environmental reviews prior to license renewal, a plant's operating experience forms an important basis for the impact determinations. The comments provide no new information and, therefore, will not be evaluated further. No change will be made to the GEIS as a result of these comments.*

Comment: I think that the Congressional offices -- and I represent Congressman Edward Markey, and if we were notified by the NRC of a hearing, we would be happy to submit a secondary press release to the local newspapers. I think that it is a good way for our local communities to become more involved in the process. (LRG-S-21-BO-1)

Response: *The NRC appreciates the offer to provide press assistance. The comment was forwarded to the NRC Office of Public Affairs for consideration.*

Comment: The new GEIS should apply to licensees who submit applications prior to 2006. (LRG-S-26-BO-1)

Response: *The NRC's current plan is to apply the revised GEIS to all license renewal applications submitted after the date the Record of Decision for the revised GEIS is printed in the* Federal Register*. The comment provides no new information and, therefore, will not be evaluated further.*

Comment: I am just curious as to -- we are going through this process of reevaluating this whole process, and why are you renewing licenses? I mean, you know that there is a problem, along with everything else that we are talking about, and that we might want to consider stopping your renewal process until you have made a determination as to what should be done. It just does not seem like the right thing to do. (LRG-S-27-BO-1)

Comment: I am kind of sad that this whole conversation seems to be predicated upon the assumption that there will be a proliferation in the number of nuclear power plants in the U.S. And I almost feel like no matter what we say tonight, that process is going to continue and go forward. And that to me is a little sad because I think as some people pointed out here tonight, there is a mass movement in this country of people who are posing the question of whether nuclear power should go further at all. (LRG-S-31-BO-1)

Response: *Section 103 (of the Atomic Energy Act [42 USC 2133]) allows for the renewal of nuclear power plant operating licenses. The NRC's reasons for moving forward with the revised GEIS are set out in the Notice of Intent in the June 3, 2002,* Federal Register *at page 33209. The NRC is updating the GEIS to ensure that the evaluation is technically sound and accurate. It will incorporate any new information that may have been uncovered through past experience with the review process, and any new information that was discovered during the scoping period. The comments provide no new information and, therefore, will not be evaluated further.*

Comment: Please DO NOT rubber stamp renewals at the nuclear plants which are due for close down phasing. Do your job to protect the public from the increased risk associated with extending these plants operating life.

Energy at any cost is no deal and the NRC's mission is to protect the public, not the industries or their bottom line. The cost in $ and health risk are unacceptable. (LRG-S-45-E-1)

Comment: I am extremely concerned that the license renewal process has thus far been primarily a rubber-stamping process, wherein NRC is not only accommodating to industry demands, but actually promotes the industry at every turn, and at nearly any cost, including public health and safety. Thus far, the NRC has approved license renewals for 8 nuclear facilities comprising 16 reactors, and it appears that NRC's approval process is a rather perfunctory evaluation and little more than a bureaucratic formality that a licensee must tolerate to arrive at a predetermined conclusion, which is, invariably, approval. (LRG-S-43-E-11)

Response: *The NRC makes a detailed, site-specific analysis of each license renewal application. Further information on the process, regulations, guidance, opportunities for public involvement, and status of current activities associated with renewal of licenses for commercial operating power reactors is available on the NRC's Web site at http://www.nrc.gov/reactors/*

operating/licensing/renewal.html. The comments provide no new information and, therefore, will not be evaluated further. No change will be made to the GEIS as a result of these comments.

Comment: We support the basic tenets of the NRC's licensing process and find the combination of a General Environmental Impact Statement and a site specific supplement to the FEIS an efficient way to process applications for license renewals. (LRG-S-58-L-1)

Response: *The comment is supportive of the license renewal process and is general in nature. The comment provides no new information and, therefore, will not be evaluated further.*

Comment: We recommend that NRC improve this process by including in its regulations a requirement for applicants to consult with the [Fish and Wildlife] Service prior to and during the development of their supplemental Environmental Reports (10 CFR 51.60). This would provide the Service maximum flexibility for addressing our statutory responsibilities including, for example, the Endangered Species Act and the Migratory Bird Act. This could benefit NRC by reducing the time period for consultations with the Service. (LRG-S-58-L-2)

Response: *The NRC's guidance for license renewal applicants concerning coordination of threatened or endangered species issues with the U.S. Fish and Wildlife Service (FWS) is in Section 4.10 of Supplement 1 to Regulatory Guide 4.2,* Preparation of Supplemental Environmental Reports for Applications to Renew Nuclear Power Plant Operating Licenses*, September 2000. In this section of the regulatory guide, the NRC directs the applicant to determine whether the site and vicinity are within the range of listed species, and if they are, to prepare an assessment that determines the extent to which refurbishment activities associated with license renewal and continued plant operation are likely to jeopardize the continued existence of those listed species or to result in the destruction or adverse modification of critical habitat. If, during compilation of information and assessment of the effects of license renewal on threatened and endangered species, a need arises to consult with either the FWS or the National Marine Fisheries Service (NMFS), the prospective applicant is directed to notify the NRC so that the NRC can coordinate the consultation. The comment provides no new information and, therefore, will not be evaluated further. No change will be made to the GEIS as a result of this comment.*

Comment: 10 CFR 51.53(a): Although the provisions specific to license renewals begin at (c), the Nuclear Regulatory Commission should include a requirement to analyze all project effects for licenses under their authority with the best available information. For example, the Service has a special interest in developing and implementing the most efficient techniques for preventing entrainment and impingement of aquatic organisms at cooling water intakes. In cases where the applicable nuclear facility information is outdated, inconsistent with related information from other intake structures (i.e. non-nuclear), or fails to address specific species of

concern, we believe that NRC should require license applicant to consult with the Service (and other applicable resource agencies) during the early stages of the development of their Environmental Report in an effort to expeditiously develop needed information. (LRG-S-58-L-6)

Response: *The NRC reviews in detail the environmental reports submitted by license applicants. When information in a report is not the best available information, the NRC typically requests that the applicant provide new and additional information to supplement the environmental report. No change to the GEIS will be made as a result of this comment.*

Comment: Considering re-licensing without updating GEIS standard is not in the best interest of America's future. (LRG-S-13-LA-13)

Comment: From the impact that nuclear plants have on marine habitats (reactors must be near a source of water for cooling) to the potential targeting of a plant for a terrorist attack, the Nuclear Regulatory Commission either struggles to look the other way or just bury its head in the sand. The National Environmental Policy Act requires that the NRC periodically re-assess its findings of the environmental effects of renewing plant licenses. The current findings attempt to generically downplay or dismiss all effects, current and potential, at nuclear plants. From groundwater contamination to waste storage to accidents, the recurring theme from the NRC is that any negative result is unlikely, and its consequences would be minor. (LRG-S-48-E-5)

Comment: The Service believes that the NRC should analyze information collected since the completion of their systematic inquiry into the environmental impacts of activities associated with license renewals and environmental impacts of continued project operations. This analysis should be used to verify the assumption made of all Category 1 conclusions summarized in Table B-1. Table B-1 should be updated to state affirmatively the findings for all Category 1 issues. The NRC may find it necessary, based on the results of this analysis, to reclassify some impacts as Category 2, thus requiring additional site specific investigations during the license renewal process. (LRG-S-58-L-3)

Comment: Table B-1: We suggest that all category 1 summary findings should be reassessed and information provided to support the assumptions. Category 2 summary findings for Aquatic Ecology, specifically once through cooling water systems, should require the use of the best technology available. (LRG-S-58-L-13)

Response: *The NRC is currently in the process of revising the 1996 GEIS. The purpose of this revision is to review and update the technical basis for the findings in Table B-1 using best available information, including any new and significant information that would change the conclusions in the 1996 GEIS. As a result of the review, the NRC will reevaluate the conclusions regarding Category 1 and Category 2 impact issues in Table B-1 of 10 CFR 51 Subpart A, Appendix B and revise the table accordingly. The NRC has no authority to require*

specific technologies beyond those imposed by the EPA or other jurisdictional agencies. The comments provide no new information, and will not be evaluated further.

Comment: 10 CFR 51.53(c)(3)(ii): We encourage NRC to specifically require the installation of the best technology available pursuant to Clean Water Act 316(b) or to require new project specific studies as determined necessary by Federal and State resource agencies and Tribes to determine appropriate alternatives to the best technology available. (LRG-S-58-L-9)

Response: *Section 316 of the Clean Water Act (33 USC 1326) covering thermal discharges is administered by the EPA or a State with delegated authority from the EPA. The authority of the NRC is limited in matters that are expressly assigned to the EPA as shown by the decision on Yellow Creek, a Tennessee Valley facility, in 1978. Specifically, the decision determined that the NRC's authority is limited for those matters that are expressly assigned to the EPA by the Federal Water Pollution Control Act Amendments of 1972. The comment provides no new information and, therefore, will not be evaluated further. No change will be made to the GEIS as a result of this comment.*

Comment: But even if you don't look at this problem from an accident or a catastrophe point of view, we are hearing a lot of concerns about cumulative impacts that we don't feel the agency is properly looking at. (LRG-S-02-AT-7)

Response: *Cumulative impacts were evaluated in the 1996 GEIS, and those conclusions will be reviewed and modified if deemed appropriate in the revised GEIS.*

Comment: 10 CFR Part 53(c)(2): We recommend that NRC require the use of the best available information the environmental report (see comment #4) and to require new studies to meet this objective as determined necessary by Federal and State resource agencies and affected Indian Tribes. In addition, the report should include a detailed assessment of cumulative, direct, and indirect effects of project operations on the environment. (LRG-S-58-L-8)

Comment: 10 CFR 51.60: We believe that the environmental reports file for license renewals should be based on the most current information available. (LRG-S-58-L-12)

Response: *The NRC's guidance for the preparation of environmental reports (ERs) by license renewal applicants is provided in Supplement 1 to Regulatory Guide 4.2,* Preparation of Supplemental Environmental Reports for Applications to Renew Nuclear Power Plant Operating Licenses*, September 2000. In this regulatory guide, the NRC describes the format and content of the ER to be submitted as part of an application for the renewal of a nuclear power plant operating license submitted pursuant to 10 CFR Part 54, "Requirements for Renewal of Operating Licenses for Nuclear Power Plants." In developing the ER, the applicant is directed*

to identify new and significant information relevant to an evaluation of impacts. In addition, applicants are specifically directed to evaluate cumulative, direct, and indirect effects of license renewal. The comments provide no new information and, therefore, will not be evaluated further.

Comment: It is patently ridiculous that for the purposes of license renewals and the GEIS, the NRC has dispensed with the NEPA requirement to meaningfully demonstrate a need for the proposed action. Fundamentally, the various risks associated with extending operations at U.S. nuclear power plants are unnecessary and therefore unjustified. It is nothing short of farcical that the NRC has deemed these considerations outside the scope of its NEPA obligations. (LRG-S-43-E-12)

Response: *The purpose and need for the proposed action are discussed in the site-specific environmental impact statements and in GEIS Section 1.3: "The purpose and need for the proposed action (renewal of an operating license) is to provide an option that allows for power generation capability beyond the term of a current nuclear power plant operating license to meet future system generating needs, as such needs may be determined by State, utility, and where authorized, Federal (other than NRC) decisionmakers." The definition reflects the Commission's recognition that, unless there are findings in the safety review required by the Atomic Energy Act of 1954 or findings in the NEPA environmental analysis that would lead the NRC to reject a license renewal application, the NRC does not have a role in the energy-planning decisions of State regulators and utility officials as to whether a particular nuclear power plant should continue to operate. The comment provides no new information and, therefore, will not be evaluated further. No change will be made to the GEIS as a result of this comment.*

Comment: NIRS continues to take issue with the determination by NRC that an environmental issue is "resolved" or absolved of redress in simply by listing it as a generic consideration. The mere listing does not necessarily translate into actual resolution and the meaningful mitigation of environmental issues at site specific reactors. NIRS takes note that in fact such treatment currently removes it from challenge by contentions in a public intervention process. Through such means, NRC and the nuclear industry currently enjoy the advantage to indefinitely table resolution at increasing risk to public safety and environmental health and avoid addressing such issues during the licensing proceeding. (LRG-S-62-E-1)

Response: *All Category 1 and 2 issues are evaluated in the GEIS and in subsequent supplements to the GEIS. In preparing SEISs, the NRC staff evaluates each of the Category 1 issues to determine if the conclusions in the GEIS are still valid. It uses information provided by the public during scoping or review of the draft SEIS, information provided by agencies, information collected by the applicant in developing the license renewal application, and information gathered during the NRC staff's site audit. The comment provides no new*

information and, therefore, will not be evaluated further. No change will be made to the GEIS as a result of this comment.

Comment: If the NRC is to comply with the mandates of the National Environmental Policy Act, I believe a site-specific environmental impact statement should be prepared for any nuclear power plant for which an NRC licensee is requesting an operating license or construction permit extension --- with no exclusions permitted of Category 1 generic issues. (LRG-S-63-E-13)

Response: *A site-specific environmental impact statement that analyzes the environmental impacts of license renewal at that particular site is prepared each and every time a licensee submits an application for license renewal. Category 1 issues are not excluded from the site-specific environmental impact statement. The conclusions in the GEIS relative to each Category 1 issue are reviewed for appropriateness to the specific plant being evaluated. Specifically, the NRC staff consider whether there is new and significant information that would lead them to alter the conclusions regarding the magnitude of Category 1 impacts. Sources of such new and significant information include public comments provided during the scoping period or draft SEIS review, comments from agencies, information gathered by the licensee in preparing the license renewal application, and information gathered by the NRC staff during each plant site audit. The comment provides no new information and, therefore, will not be evaluated further. No change will be made to the GEIS as a result of this comment.*

Comment: Since we have seen by the recent near failure of a reactor vessel head that the NRC is unwilling to enforce its own regulations, does the GEIS presuppose the regular and continuing failure to regulate by this agency. It should. It is clear that little was learned from 3-Mile Island, and safety equipment to avoid the hydrogen explosion portion of that disaster have been non-functional at Davis-Besse for over 25 years. (LRG-S-16-BO-7)

Comment: I am heartened by the fact that the public unanimously who has turned out to speak tonight has a voice that they pretty much have zero confidence in the NRC. And if I am wrong about that, I would like to have someone correct me, and if no one corrects me, I would like the record to reflect that the public at this meeting has no confidence in the Nuclear Regulatory Commission. (LRG-S-16-BO-18)

Comment: Your mission is to make sure that under the Federal Code that you are assuring public safety by enforcing the regulations. You are not enforcing the regulations. The culture now seems to be voluntary. The industry apparently is being asked by your agency to come into compliance politely, and that seems to be the culture. We expect more of you and we are paying your salary, and Congress has mandated you with the task that you are not fulfilling. (LRG-S-25-BO-6)

Comment: Pilgrim Security Watch wishes to add our organization's name to the comments by Mothers for Peace, attached, regarding the public's ability to meaningfully participate in NRC's decision making process affecting our communities.

It is more than clear that industry has no difficulty in securing closed meetings with the NRC to essentially write their own rules. (LRG-S-37-E-1)

Comment: The Boston meeting made it clear that the public safety community holds the NRC in little to no respect – mere apologists for the industry. (LRG-S-37-E-2)

Comment: NRC attorneys clearly support the industry and the utilities. (LRG-S-37-E-15)

Comment: The NRC is long overdue to take their job seriously as regulators of the nuclear industry. The NRC must stop catering to the nuclear industry¹s every whim, and actually fulfill their primary mission "to protect public health and safety, and the environment from the effects of radiation from nuclear reactors, materials, and waste facilities." (LRG-S-39-E-1; LRG-S-40-E-1; LRG-S-44-E-1; LRG-S-51-E-1)

Comment: As the foremost regulator of this country's nuclear industry, the NRC must stop catering to the nuclear industry's every profit-motive, and fulfill its primary mission "to protect public health and safety, and the environment from the effects of radiation from nuclear reactors, materials, and waste facilities." (LRG-S-46-E-5)

Comment: The NRC must stop catering to the nuclear industry's every profit-motive, and fulfill its primary mission "to protect public health and safety, and the environment from the effects of radiation from nuclear reactors, materials, and waste facilities." (LRG-S-47-E-1)

Comment: As a government agency, you should be protecting the public interest thru enforcing stricter controls on nuclear facilities regarding public exposure to nuclear radiation, not enabling more exposure. (LRG-S-49-E-5)

Comment: The ineptitude of this agency in regulating is mind-boggling. (LRG-S-16-BO-8)

Comment: This process is a sham. The Nuclear Regulatory Commission regulates corporations which damage and destroy life in order to make a profit, in this case by generating electricity. (LRG-S-16-BO-2)

Comment: The NRC is long overdue to take its job seriously as regulator of the nuclear industry. The NRC must stop catering to the nuclear industry's every whim, and actually fulfill its primary mission "to protect public health and safety, and the environment from the effects of radiation from nuclear reactors, materials, and waste facilities." Please act responsibly and in

accord with your stated mission in drafting an environmental impact statement for the license renewal of nuclear power plants. (LRG-S-38-E-5)

Comment: I wanted to point out that it is absolutely essential to the underlying confidence and faith that anyone may ever have in the work of the Commission that a principal as important as the independence of quality assurance from production, that that be recognized and maintained. It is enshrined in the Appendix B, however I'm deeply concerned that there is an existing gentleman's agreement that these need not be unheard and can in fact be dismantled as needed during corporate mergers. (LRG-S-12-CH-2)

Comment: This is unacceptable and if the NRC can't in fact introduce a fair and equitable process and scientific one, then Congress has to, and the people have to, and the States have to, because if the NRC isn't go to protect us, then somebody better, because our communities are already suffering from epidemics of disease. And to now add terrorism to it just takes it over the top. (LRG-S-30-BO-3)

Comment: I think that there are so many cultural issues within your agency that are so disturbing as a bureaucracy, that as bureaucrats who have worked for this agency for a long time, if you are not aware of them yourself, then you are unable to see the forests for the trees. And I think as professionals that you need to look at your agency and the culture with which you are operating. And to voice these concerns in your departments, and within the agency…And there are a lot of good people in your agency, and there are a lot of good technical people in your agency who have done their work, and it has not been acknowledged within your agency. And I don't know quite where this culture falls apart, but there are good people at the NRC and you guys may be part of it, but the culture is falling apart and we know it. It is too big for you to handle because things were swept under the rug and not addressed and not dealt with by this agency. And the gig is up. It is very soon. (LRG-S-30-BO-10)

Response: *The comments are general in nature and express discontent with the NRC's performance as a regulatory agency. The Energy Reorganization Act of 1974 established the NRC and assigned it the job of regulating the nuclear industry. The NRC regulates the various commercial and institutional uses of nuclear energy, including nuclear power plants. Under its responsibility to protect public health and safety, the NRC has three principal regulatory functions: (1) establish standards and regulations; (2) issue licenses for nuclear facilities and users of nuclear materials; and (3) inspect facilities and users of nuclear materials to ensure compliance with the requirements. Every nuclear power plant licensed by the NRC must maintain a quality assurance program (10 CFR 50.54). The comments provide no new information and, therefore, will not be evaluated further.*

Comment: It is possible to state that there is an interval or main interval between actions that are severe. In particular, those which go as vessel or resultant fires that burn vigorously for

days or eject molten fuel from the apparatus. But that interval is finite. It's difficult to estimate. You'll get different answers depending on who you speak to but where would each of us want to be when it is said that at the next hour the Governor is expected to make an address with regard to the new update to the changing boundary of the evacuation zone. Would we want to have enshrined and defended a process which scrunches and eviscerates the warnings given by the engineers or will we find that we've done our best to publicize and to develop and respond to the very real and I think insurmountable, possibly insoluble technical problems that this has presented. I can understand the investor's enthusiasm to pursue license renewal but I find it really unconscionable that we should be considering doing this with this pattern in place. (LRG-S-12-CH-4)

Comment: Re-licensing aging nuclear power plants 20 years before current licenses end is not in the best interest of America's future. (LRG-S-13-LA-12)

Comment: In consideration of public welfare, it appears as irresponsible for there even to be a procedure whereby a nuclear energy facility can apply for operating license approval for the technologically distant future. It cannot be known at the present time whether a facility's components will become outdated in terms of safety and / or deteriorated. I urge that NRC not approve the subject (premature) license extension. (LRG-S-57-E-1)

Comment: So essentially you are granting a relicensure to a plant that has 18 years to go on its existing license, and so you are making a decision based on the supposed conditions at that plant, 18 years hence? Okay. Here is a process that needs a change. (LRG-S-19-BO-5)

Response: *A nuclear power plant licensee can apply to the NRC to renew a license as early as 20 years before expiration of the current license. The NRC staff has determined that 20 years of operating experience is sufficient to assess aging and environmental issues at the site. A licensee may submit an application for license renewal at a plant that has less than 20 years of operating experience; however, an exemption to the regulations is required. A major consideration for seeking license renewal so far in advance of the expiration date of the current license is that it takes about 10 years to design and construct major new generating facilities, and long lead times are required by energy-planning decisionmakers. The licensee is required to meet all Federal, State, and local environmental requirements throughout the operational period. Therefore, publication of the SEIS several years ahead of the renewal date for the operating license does not preclude the need for ongoing environmental compliance activities. The comments provide no new information and, therefore, will not be evaluated further.*

Comment: The NRC has stripped citizens of any input into re-licensing hearings. In contrast, when nuclear plants were first being constructed, citizens and scientists outside the industry provided an important safety net by questioning the science of the utilities and the NRC scientist. Citizen input needs to be restored to re-licensing hearings. (LRG-S-50-L-2)

Comment: Theoretically, public input is valued, but this process allows just 12 hours of input from the entire U.S. populous on the issue of what is an acceptable amount of radiation poisoning for our nation for another 20 years or maybe more. (LRG-S-16-BO-4)

Comment: I want to start with a sense of this process. You know, this was one of the hardest places for me to get to than I have ever gone to an NRC hearing at, and I want to commend you for making it the most difficult public participation process to engage in yet. Now, we might do the next one in Canada, which would allow us an even greater struggle, and a sense of real determination to participate. So I wish we could make them a little easier to access for many people. (LRG-S-30-BO-1)

Comment: You say that you ensure that the public has the highest level of participation. And perhaps other agencies aren't as good. However, nuclear matters are perhaps more serious, and when you give the public 90 days and you are going to be going through this process until 2006, it seems to me that maybe the public could have a year also, and I would like you to consider that. (LRG-S-20-BO-1)

Comment: First of all, I would like to thank the NRC for hosting this meeting. Even if it is not required, I think it is a great opportunity to get some input from the public, and so I do appreciate that very much. (LRG-S-22-BO-1)

Comment: There is a general feeling that there always exists a “Catch 22,” and the private sector can not make a difference. (LRG-S-37-E-19)

Response: *The NRC considers all comments from the public submitted during periods of public comment. As with any licensing activity before the NRC, the public has an opportunity to participate in the NRC’s decision-making process with regard to license renewal. Numerous opportunities were provided for public participation in the GEIS revision. There were two scoping periods (June 3 to September 13, 2003, and September 27 to December 30, 2005) during which the public had the opportunity to provide comments on scope of the review. During the initial scoping period, the NRC held four public meetings at locations in different portions of the United States to consider public scoping comments on the GEIS revision. The public will also have an opportunity to comment on the revised GEIS. Hearings on license renewal applications are not mandatory; that is, hearings are held only if a petition that shows standing to intervene and sets forth at least one contention (issue) that is suitable for litigation in the proceeding is filed. The comments provide no new information and, therefore, will not be evaluated further.*

Comment: Unless the NRC wants to pay people the air fare, travel, to come to these meetings you need to stop this generic attitude of yours and go right down elbow to elbow with people

and talk to them about their plants…we're not paid for in all cases by a specialist group, we are not paid for by NGOs [non-governmental organizations]. We are here because we are concerned, we're here because we're talking for the 14,000 members of the Georgia Sierra Club, and they have concerns. We're here because a nationwide Sierra Club of half a million people have causes to give nuclear power because of some of the unsolved issues with nuclear power. You need to take it to the people, and not going to the individual sites about everything doesn't look too good. (LRG-S-06-AT-9)

Comment: Public meetings on generic issues are not held in reactor communities, resulting in low attendance and extra expense for the few public members that make the effort to attend. (LRG-S-37-E-11)

Response: *The NRC holds public meetings throughout the United States and accepts comments during the scoping period from members of the public who were unable to attend the meetings. The NRC also conducts public meetings in communities close to nuclear power plants who's owners have applied for license renewal.*

Comment: There is inadequate notice to states and organizations regarding public meetings. (LRG-S-37-E-10)

Response: *The public is notified at the beginning of the scoping process through the publication of a* Federal Register *notice, a meeting notice on the NRC Web site, through advertisements placed in local newspapers in communities near the nuclear power plant, and by flyers distributed throughout the local community. Specific meeting announcement information is provided to the public as soon as the NRC staff is reasonably confident that a meeting will be held and firm date, time, and facility arrangements have been made, but generally no fewer than 10 calendar days before the meeting. When a meeting must be scheduled but cannot be announced 10 calendar days in advance, the NRC staff provides as much advance notice as possible. Public notice of meetings is made via the Internet on the NRC Web site. Meeting changes or cancellations are announced promptly on the NRC Web site. Members of the public who cannot access the NRC Web site can contact the NRC Public Document Room staff via a toll-free number (1-800-397-4209) or by e-mail (pdr@nrc.gov) for information on scheduled NRC meetings. Some meetings having very high public interest are announced via a press release or paid advertisement in local newspapers, or both. The comment provides no new information and, therefore, will not be evaluated further.*

Comment: I think that everyone should make note that the industry found no need to make comment, because as we know the industry and the NRC behind closed doors are writing the rules. So there has been no need for the industry to come and comment about how they may want things changed or relaxed, and I think that is just an interesting observation. (LRG-S-17-BO-16)

Response: *Stakeholders and members of the public may submit oral or written comments as part of the scoping process. The scoping process does not limit participation, rather it is up to the individual to submit comments. It should be noted that industry representatives did submit scoping comments to the NRC and those comments are included in this scoping summary report. The comment provides no new information and will not be evaluated further.*

Comment: The overuse of acronyms by the NRC staff in public notices make them meaningless to interested parties. (LRG-S-37-E-13)

Response: *The NRC agrees that the overuse of acronyms in public notices or other documents can reduce their effectiveness. In future notices, the NRC staff will attempt to limit acronym use.*

Comment: Members of the community who do attend meetings are often treated inappropriately, i.e. searches, metal detectors, weapon sniffing dogs, no signs, no speaking. (LRG-S-37-E-14)

Response: *The NRC establishes visitor controls and related security procedures for public meetings held in NRC regional offices or other remote locations on the basis of an overall assessment by the NRC's Physical Security Branch relative to potential security concerns. Security requirements nationwide may differ on the basis of various factors and, therefore, meetings are evaluated on a case-by-case basis. Additional information is in the May 28, 2002* Federal Register *beginning at page 36920. The comment provides no new information and, therefore, will not be evaluated further.*

Comment: The ADAMS website is extremely difficult and exasperating to navigate. (LRG-S-37-E-9)

Response: *Information on using ADAMS is available on the NRC Internet Web site at: http://www.nrc.gov/reading-rm/adams/help-reference.html#ListofLicenses. The NRC Public Document Room (PDR) Reference staff is available to help the public with ADAMS. The PDR staff can assist with: (1) ADAMS installation questions, (2) ADAMS hardware and software issues, (3) searching ADAMS, (4) searching for documents created before November 1, 1999, that are not available in ADAMS, (5) arranging free ADAMS training (available at the PDR in Rockville, Maryland, near Washington, D.C.), and (6) obtaining paper copies of documents from ADAMS as well as copies of pre-ADAMS documents in various formats. These materials may be ordered for a fee via the PDR. The comment provides no new information and, therefore, will not be evaluated further.*

Comment: For over 30 years the San Luis Obispo Mothers for Peace have brought important issues of safety to the attention of the NRC. We continue to participate, even though frustrated by NRC processes and are often left with the belief that no one at the NRC is listening. It is virtually impossible for the public to have the same relationship with the NRC that is available to the nuclear industry. (LRG-S-37-E-20)

Comment: The NRC refuses to allow full hearings on issues of safety that could seriously impact reactor communities. (LRG-S-37-E-12)

Response: *The public can always raise issues concerning either site-specific or generic issues. The public can raise issues by using any of several methods. If the licensee has requested an action requiring a license amendment, then the process for intervening in this action is to request or participate in a hearing. The process is set forth in NRC's regulations in 10 CFR Part 2, "Rules of Practice of Domestic Licensing Proceedings and Issuance of Orders." If the action of concern does not involve a license amendment, then any member of the public may raise potential health and safety issues in a petition to the NRC to take specific enforcement action against a licensed facility. This provision is contained in the NRC's regulations and is often referred to as a "2.206 petition" in reference to its location in the regulations (Chapter 2, Section 206 or 10 CFR). The comments provide no new information and, therefore, will not be evaluated further.*

A.1.1.13 Comments Concerning Issues Outside the Scope of License Renewal

Safety and Security

Comment: And if you are about safety and regulating safety I plead you to reconsider the process that you go through for relicensing these plants. (LRG-S-03-AT-9)

Comment: I would like to address the issue of spent fuel, and one of our concerns, and I think in listening to the presentation on the generic impact statement, the GEIS, when you look at something -- and I think that many of the issues that you are going to I'm sure hear about tonight is that if everything is working perfectly, there is no environmental impact. Or you might conclude as you do here in Table B-1 on spent fuel that the impact will be small, and the reason is because nothing has a problem. The problem always comes up when you have a problem, and then the environmental impact is huge.

And I think that this is where -- and I am sure that you are going to hear it, because I have just been chatting with people, that there is this discrepancy that if it is not a problem, because everything -- the mechanical systems, and the people are all trained well and everything is working as you anticipated, or as you hope it will, and certainly I hope it will, you just don't know what will happen when it does happen and if something goes wrong. (LRG-S-22-BO-3)

Comment: Perhaps the NRC believes that the economic pressures to cut operating budgets increase safety. (LRG-S-16-BO-6)

Comment: Your mandate is to protect public health and safety. Sadly, when safety issues are brought to the NRC's attention it is the utilities that have the financial means to provide experts to dissuade the NRC of their importance. Neither the NRC, nor the public have equal access or equal finances to provide credible opposing opinions. (LRG-S-37-E-21)

Response: *The Energy Reorganization Act of 1974 established the NRC and assigned it the job of regulating the nuclear industry. The NRC regulates the various commercial and institutional uses of nuclear energy, including nuclear power plants. Under its responsibility to protect public health and safety, the NRC has three principal regulatory functions: (1) establish standards and regulations; (2) issue licenses for nuclear facilities and users of nuclear materials; and (3) inspect facilities and users of nuclear materials to ensure compliance with the requirements. Operational safety is considered outside the scope of the environmental review. However, the NRC also performs a safety review to determine whether there is reasonable assurance that activities authorized by a renewed license will continue to be conducted in accordance with the current licensing basis. The intent of the NRC's safety review is to determine if the applicant has adequately demonstrated that the effects of aging will not adversely affect any systems, structures, or components, as identified in 10 CFR 54.4. The comments provide no new information and, therefore, will not be evaluated further.*

Comment: Plant Safety Culture: A thorough site-specific review of a plant's "safety culture" among plant management should be included in any license renewal application. "Lessons Learned" from the Columbia Accident Investigation Board's report, released August 2003, may be very relevant to accident prevention and safety at nuclear power plants. The report, which identifies root causes for the Columbia shuttle disaster, noted that cultural constraints and organizational practices detrimental to safety were allowed to develop. These included:
(a) reliance on past success as a substitute for sound engineering practices (such as testing to understand why systems were not performing in accordance with requirements);
(b) organizational barriers that prevented effective communication of critical safety information and stifled professional differences of opinion; and (c) program managers that were clearly overconfident. NRC should examine the Lessons Learned from this comprehensive safety investigation and how these lessons may be applied to safety programs for our aging nuclear power plants.

A similar investigation of the Challenger disaster identified an ineffective "silent safety" system in which budget cuts resulted in a lack of resources, personnel, independence and authority. Although subsequent NASA briefings described a risk-adverse philosophy that empowered any employee to stop an operation at the mere hint of a safety problem, the Columbia Safety Board

report concluded that NASA's views of its safety culture in those briefings "did not reflect reality." The report also concluded that Shuttle Program safety personnel failed to adequately assess anomalies and frequently accepted critically important risks without analytical support, even when the tools to provide more comprehensive assessments were available.

A 1990 U.S. General Accounting Office (GAO) questioned the effectiveness of NASA's safety organization. Similarly, a GAO report in 1999 criticized NRC's programs to ensure that utilities comply with NRC's regulations, take prompt actions to correct deficiencies found, and operate their plants safely. The GAO report concluded that NRC gives utilities considerable latitude to fix their problems—a strategy that may work well when utility managers place high priority on maintaining a strong safety culture. However, GAO found that this condition was not present in three plants that they examined and that the problems worsened when NRC did not hold the utilities accountable for fixing them. The GAO report found that NRC's safety oversight has not focused on the competency of nuclear plant management, even though the nuclear industry and NRC officials agree that such competency is perhaps the most critical factor in safe performance.

The Naval Reactor program was recognized in the Columbia Report for its high degree of engineering discipline, emphasis on total responsibility of individuals and organizations, and its redundant and rapid means of communicating problems to decision-makers. The NRC should review the findings from the Columbia disaster investigation for successful elements of the Naval Reactor safety program and any lessons learned that can be applied to nuclear power plant safety management. NRC should develop criteria for use in evaluating a licensee's "safety culture" based on findings from the Columbia report regarding shortcomings in the safety culture at NASA and strengths of the Naval Reactor safety program. The license renewal process should use these criteria for conducting a thorough plant-specific review of plant management and its safety culture. Renewing a plant's operating license should be conditioned upon an effective safety culture in plant management. (LRG-S-60-E-10)

Response: *Plant safety culture and operational safety matters are outside the scope of this environmental review. An NRC safety review for the license renewal period is conducted separately. Although a topic may not be within the scope of review for license renewal, the NRC is always concerned with protecting health and safety. Regarding safety culture, the Commission issued a policy statement on August 21, 1986 (51 FR 30028). Additionally, following the Davis-Besse reactor vessel head degradation, an NRC Lessons Learned Task Force recommended the NRC inspection and assessment processes be reviewed for potential enhancements to identify and disposition the types of problems that were experienced at Davis-Besse. In addition, the Commission directed the staff (Staff Requirements Memorandum-04-0111) to enhance the Reactor Oversight Program (ROP) to more fully address licensee safety culture.*

A number of ROP inspection guidance documents were enhanced in 2006 to incorporate inspection and assessment guidance for licensee safety culture. See Regulatory Issue Summary 2006-13, "Information on the Changes made to the Reactor Oversight Process to More Fully Address Safety Culture" for a comprehensive discussion of changes. The ROP safety culture changes were made to: (1) provide opportunities for the staff to identify safety culture weaknesses and to encourage licensees to take appropriate actions before the plant experiences significant performance degradation, (2) provide criteria for considering when to request licensees to perform a safety culture assessment, and (3) provide guidance on how the staff should evaluate a licensee's safety culture assessment and how to perform an independent NRC assessment of a licensee's safety culture.

The staff has performed a lessons learned evaluation of the initial implementation of the 2006 ROP safety culture enhancements. Further ROP enhancements have been discussed with external stakeholders and will be implemented by the NRC. Further, in response to a Commission Action Memoranda (COMGBJ-08-0001) issued February 25, 2008, the staff is working on an expansion of the Commission's safety culture policy and to address the unique aspects of security. Any matter potentially affecting safety can be addressed under processes currently available for an existing operating license in the absence of a license renewal application

Comment: The NRC must reassess and improve its problem identification and resolution programs. If the NRC had enforceable standards for problem identification and resolution programs at all facilities, then the number of plants that have been shut down for a year or more would not have occurred. There have been 26 plants that have been shut down since 1984 for over a year for extensive repairs. This data is clear evidence that leaving problem identification and resolution problems up to the industry to develop without an NRC standard allows flawed programs to be in place.

The NRC needs to establish a conservative and high standard for problem identification and resolution programs, and develop a reliable inspection process to verify that the industry executes them. (LRG-S-25-BO-1)

Comment: The waivers or exceptions given to a plant, or the need to bring an aging plant up to the current safety modification standards required of new and younger plants, is not a requirement. This process that you have undertaken is based on the assumption that every one of these plants is operating under its design.

We know that by the exceptions, the waivers, the event reports, that they are not. It's obvious that they are not. So you are starting from a point to establish a risk and an impact from small, medium, and large that you cannot do based on the assumption that you are starting with. (LRG-S-25-BO-8)

Comment: NRC should develop criteria for evaluating the safety of plants with significant design modifications or significant long-term safety violations: NRC assumes that plants are safe if they operate as designed and meet NRC's regulations. However, changes made to a plant over time, such as replacing components with different parts and reconfiguring systems can alter the plant's design and affect how certain safety systems may work in an emergency. The GAO recommended in its 1999 report that NRC should develop a means of quantifying the safety of plants that deviate from their approved designs. In the 1990's, NRC found that some utilities had not maintained current information on their plant's designs and had not examined the impact of modifications on the safety of the plant's operations. NRC identified instances in which utilities had not properly tested safety-related components and had made errors in their analyses of how emergency cooling systems would work in an accident. NRC concluded that most of the problems resulted from errors in the original design or from design modifications, inadequate testing, and discrepancies in documentation. The license renewal evaluation should include an analysis of the safety impacts of plants that deviate from their approved designs. (LRG-S-60-E-11)

Response: *Operational safety matters are outside the scope of this environmental review. It is important to note that the NRC has a comprehensive inspection program, as part of its Reactor Oversight Program (ROP). This includes Inspection Procedure IP 71152, "Identification and Resolution of Problems," which is used to perform detailed inspections of a licensees' problem identification and resolution process. Further the ROP baseline inspection program includes a variety of inspection procedures that address licensee design and modifications, such as Inspection Procedure IP 71111.21, "Component Design Bases Inspection." Additionally, an NRC safety review for the license renewal period is conducted separately and is part of the current operating license basis. When performing its review to renew an operating license of a nuclear plant, the NRC staff uses the standard that there is a reasonable assurance that the activities authorized by a renewed license will continue to be conducted in accordance with the current licensing basis for the facility. It reviews the application to see if there is reasonable assurance that the applicant has identified the components affected by aging and has demonstrated that adequate aging management practices are in place for those components for the extended term. The comment provides no new information and, therefore, will not be evaluated further.*

Comment: Impact of Deregulation on Plant Safety: One of the major changes that has occurred since the GEIS was issued in 1996 is deregulation of the electricity market. As the electric utility industry is deregulated, safety margins may be compromised as licensees or utilities cut costs to remain competitive. One troublesome example of cost-cutting measures is curtailing maintenance programs, thereby reducing safety margins. The pressures for cost-cutting measures can be very high. The 1999 GAO report stated that as many as 26 of the nation's nuclear sites are vulnerable to shutdown because production costs are higher than the

projected market prices of electricity. As a result, electricity production schedules, plant safety objectives, and cost reduction goals may conflict with one another. Therefore, license renewal evaluations should include an evaluation of the licensee's commitment to plant safety over and above the potentially conflicting goals of plant electricity production schedules and cost reduction. NRC must clearly state the goals and performance measures for which the licensees and plant operators and safety personnel will be held accountable. (LRG-S-60-E-12)

Response: *The comment relates to corporate liability and energy deregulation and their potential effects on operational safety. NRC requirements and regulatory processes are unaffected by deregulation, and the industry is held to the same high standards that existed prior to deregulation. Operational safety issues are considered outside the scope of this environmental review. The comments provide no new information and, therefore, will not be evaluated further.*

Comment: Anyway, what can we do with all your impact statements regarding terrorism. This is a heavy issue, dudes. (LRG-S-06-AT-7)

Comment: Security. (LRG-S-13-LA-2)

Comment: Until it can be proven that the nation's reactors, and control rooms, and spent fuel storage could prevent or withstand a similar or more powerful terrorist attack [9/11], like a Learjet filled with C4, the purpose and need for the generic environmental impact statement update is not clear. If our consideration of license renewals is a waste of resources, then the renewal process should be terminated. However, should this agency continue relicensing, proceeding with criminal recklessness with no guarantee against a successful attack, then the GEIS update should address the impact of a catastrophically successful terrorist attack. (LRG-S-16-BO-10)

Comment: They are not required to or are able to resist or defend for an air attack. So we have this nonsense of the Commissioners trying to come up with new analysis of how rigid the reactor building is. Well, who cares. You don't have to hit the reactor building. There are softer targets that are necessarily for that fuel pool to keep going, and the reactor, such as the control room, the switch yard, and I could give you some other clues. I used to be a housewife. That is a joke isn't it? And so then you say, well, we will rely on the security at Logan Airport, major airports. That is ridiculous because we have all these secondary airports. You don't need a jet. You just need a small plane that is fuel laden and you have done the job. And so if you don't do what Congressman Markey and Senator Clinton, for example, are asking for, Avenger missiles on site, like we had at the Olympics, the summer Olympics and the winter Olympics, and they are hanging out around the White House at various times, if you can't come up with 65 for the 65 operating sites, then you are not taking it seriously. (LRG-S-17-BO-15)

Comment: The increased threat of terrorist attacks must be taken into account. Licensees must demonstrate that they have the means to resist an attack on the reactor building, and support structures, and spent fuel. (LRG-S-26-BO-2)

Comment: Through its design basis policies the NRC has taken the stance that protecting the fuel supplies is not the responsibility of the reactor operators or a condition for licensure. This flies in the face of common sense. (LRG-S-28-BO-5)

Comment: People are raising safety and security vulnerability of irradiated fuel pools, vulnerability of dry cask storage, and the NRC says it is taking it off the table already. That is what the Commissioners have decided. So what is this process about? I mean, this is unconscionable. It is unconscionable. It is unethical. That us poor people come here and say please do something for us and you have taken it off the table already. And in fact at a Commissioner's meeting, you made clear -- Commissioner McGaffigan made clear that he wanted the sense of the vulnerability of irradiated fuel pools to be attacked. That was the position that he took on it, without having an analysis done. So we are here in fact attempting to get a fair and reasonable process in which the NRC has already stacked the deck about what they are going to do. (LRG-S-30-BO-2)

Comment: The power plants and the security that is provided by the power plants needs to be improved. I mean, you have security guards that are walking out on strike because they feel like they are overworked. And this is something that is a serious problem if they can't protect the plant, and then we are all in danger, and that is something that is universal to all plants. (LRG-S-27-BO-2)

Comment: My main concern here today as a member of the Citizens Awareness Network is the security and the immediate need to do something about the irradiated fuel stored on site at nuclear facilities. As we all know, September 11th brought wide-scale threats to our infrastructure and full into our vision, and not that they weren't there before obviously, including those to these nuclear facilities. (LRG-S-28-BO-2)

Comment: The terrorist attack risk can only be reduced or shall we say mitigated by reducing the density of nuclear fuel in storage areas, or in other words spreading it out a bit, breaking the waste into multiple storage areas so you have a bowling pin here, and a bowling pin here, and not the strike that Ms. Lampert was mentioning.

And then armoring the resulted distributed containment. Hardened on-site storage systems would ideally consist of a dry storage canister of waste reinforced by concrete and steel, and protected by concrete, steel, and mounds of gravel, separated in space to prevent serial damage, and designed and tested to withstand reasonably foreseeable artillery and air attacks, and car bombs. The NRC has a responsibility to protect the American people from this clearly

preventable terrorist threat by requiring the implementation of hardened on-site storage systems for irradiated fuel as a condition of any and all licensing of nuclear power generation facilities, be it licensing or relicensing. (LRG-S-28-BO-6)

Comment: 9/11 changed the world, and it is imperative to assess the impacts of that in the relicensing process. Simply put, the NRC needs to reopen the GEIS process to fully evaluate the risks of a potential terrorist attack. (LRG-S-29-BO-1)

Comment: We recognize that at the margins there are certainly some specific details that may be too sensitive not to be kept confidential, but we want to stress that otherwise the question of the potential risks that are posed by an attack on a nuclear plant should be fully debated in an open and democratic process as NEPA requires. (LRG-S-29-BO-3)

Comment: Since the tragic events of September 11, 2001, have greatly increased. We know that terrorists have considered targeting nuclear power plants as a form of attack. We also know, as the NRC has conceded, that U.S. nuclear reactors were not designed to withstand terrorist attacks of the scale and type as those committed on 9/11/01 and therefore it is questionable, at best, that a reactor would be able to endure a similar type of attack and not suffer significant damage that could result in a radiological disaster. The NRC should thoroughly evaluate the environmental impacts of a potential attack both in an update to the Generic Environmental Impact Statement and in the site-specific reviews of particular applications for license extension. For the NRC to continue to dismiss security-related contentions as a statistically incalculable probability and outside the agency's mandate would be irresponsible in the extreme. NRC environmental impact assessments should consider the security vulnerabilities of particular design and location features, on account of which extended operations at certain reactors pose unacceptable hazards.

The NRC should also reassess the vulnerability of nuclear power plants to more conventional attacks and internal sabotage, and the associated potential environmental impacts, in light of the reality that the facilities have had such a dismal performance record in advance-noticed "force-on-force" OSRE testing. .(According to the Union of Concerned Scientists, nearly half the reactors tested between 1991 and 2001 failed to protect equipment necessary to prevent a meltdown against small groups of mock intruders, even under relatively lax test conditions.) (LRG-S-43-E-1)

Comment: The NRC should use this "scoping" process as an opportunity to reassess both internal and external/terrorist vulnerability and the associated potential environmental impacts. The reality that nuclear facilities have had such a dismal performance record in advance-noticed "force-on-force" OSRE testing is frightening. (According to the Union of Concerned Scientists, nearly half the reactors tested between 1991 and 2001 failed to protect equipment

necessary to prevent a meltdown against small groups of mock intruders, even under relatively lax test conditions.) (LRG-S-44-E-6)

Comment: In this post 9/11 era, the NRC needs to take seriously the possibility of a terrorist attack on a nuclear plant and needs to require a study of the environmental impacts of a terrorist attack from land, sea or air when it is licensing or re-licensing a nuclear reactor. (LRG-S-50-L-1)

Comment: Post-9/11 Terrorism Issues: Similarly, although NRC addresses nuclear power plant security issues outside of the power plant license renewal proceedings, the communities surrounding nuclear power plants are very concerned that plants may be vulnerable to multiple assaults and/or terrorist attacks by a large aircraft. The quantities of spent fuel accumulated and stored onsite with extended plant operation are far greater than originally envisioned when the plants were first licensed. With nuclear power plant license renewal, the large quantities of spent fuel accumulating onsite could pose a richer and more attractive target for potential terrorists.

The revised GEIS should recognize that environmental impact analyses and safety issues have changed significantly since Sept. 11. Although much of the information related to security issues with respect to nuclear power plants is considered “safeguarded” information, sufficient information should be provided during the license renewal process on whether all reasonable efforts are being made to minimize the risk of a potential terrorist attack. The environmental impact review for license renewal should include a meaningful analysis, excluding information that could compromise plant safety or security, of the potential risk and environmental impacts from a large-scale terrorist attack on a plant. (LRG-S-60-E-2)

Comment: Increased Security Risks Associated with 20-year License Extensions

The Commission must reconsider its unfair and unfounded treatment of security issues and contentions in context of the 20-year license extension process.

The Commission currently disallows license renewal contentions based on security issues and the associated increase in risk to public health, safety and the environment on the basis that terrorism is “too speculative” to be raised under National Environmental Protection Act. The Commission’s dismissal is unfounded by fact that President George Bush disclosed in a State of the Union speech that a credible threat to U.S. nuclear power stations exists from the al Qaeda network.

The threat to nuclear power stations from high-jacked, stolen, or rented cargo plans from general aviation fields is not currently evaluated for the risk posed to public health, safety and environment by security gaps or none existent security. The Federal Aviation Administration is

no where near assessing the threat posed by acts of terrorism directed from general aviation fields against critical infrastructure, namely nearby nuclear power stations.

The Commission must therefore provide for a concerned and affected public to assess, address and contend under the National Environmental Protection Act the associated risks from terrorism to a site-specific licensing proceeding as Category 2 items. (LRG-S-62-E-5)

Comment: Security

In the past two years, there has been a significant change in the potential for, and public concerns about, terrorist activities. We recommend that the GEIS acknowledge this change and address the implications for license renewal, as these issues are very likely to be raised in license renewal proceedings for individual plants. This should include not only spent fuel shipments, but also nuclear reactors and any storage facilities for on-site spent fuel and LLRW. (LRG-S-65-E-3)

Comment: The SLO GREEN Party is particularly concerned with the threat the high level radioactive waste ("spent fuel") pools represent to surrounding communities. Especially, the possibilities of fires, due to the flammable nature of zirconium alloy in the cladding, has only been recognized by the NRC since its finding in October 2000. Unfortunately, the NRC has downplayed the significance of its own findings ever since. In light of 9/11, this finding has gained even more importance because, unlike the reactor domes, the pools lack containment and sufficient structural strength of their housing. This applies for the Boiling Water Reactors because their pools are usually located several stories above ground with the possibility of total drainage of the crucial cooling water. But Pressurized Water Reactors are also more vulnerable than the NRC has recognized so far where the possibility of partial drainage exists. Take for example the Diablo Canyon Nuclear Power Plant in our County: PG&E claims that the pools are safe because the spent fuel is stored below ground. While technically true by less than 1 foot, 25 feet of the cooling water in the pools are above ground level at Diablo, according to PG&E information. Draining the top 25 feet could cause a dangerous partial drainage with the results of the remaining water temperature reaching the boiling point. Additional water could be siphoned off by terrorists. More water will boil away. The NRC finding from 10/2000 found the critical water level for boiling just 3 feet above the top of the assemblies, that's more than 2 feet more than at Diablo if the water drains to ground level. In addition, partial drainage could result in the explosive build-up of hydrogen gas!

All of these problems are avoidable at reasonable costs by returning the pools to their original "low density" design combined with "hardened" dry cask storage.

Are any such alternatives being taking into consideration? (LRG-S-66-E-3)

Comment: Currently, Vermont Yankee and Pilgrim both store irradiated fuel in highly vulnerable configurations and irradiated fuel pools are present in 65 reactor sites throughout the United States. Without going into great detail, a terrorist attack using conventional weaponry could easily penetrate the external walls of most irradiated fuel storage systems and drain their cooling water. As these facilities typically concentrate all or nearly all of the waste from a single reactor in a single area, the water cooling loss could result in ignition of the irradiated fuel and the resulting fire could distribute more than a thousand time the radiation released during the Hiroshima bombing. A report commissioned by CAN calculated that such an attack on Vermont Yankee could render 24,000 square miles uninhabitable. As radiation doesn't know any borders, this would conceivably include parts of Quebec and Ontario, rendering this an international hazard. (LRG-S-28-BO-4)

Comment: My question is regarding safeguards for highly radioactive spent nuclear fuel. What if anything is being done to assure communities where these plants are that the storage is indeed safe? (LRG-S-15-LA-1)

Comment: This [license renewal] is unconscionable considering the facts... that nuclear reactors are on terrorist's short lists. (LRG-S-37-E-7)

Comment: None of this matters to the NRC – these issues are "off the table." NRC is either "studying them" or again have played the "risk-assessment game" – put false assumptions in the equation and, no surprise, get false answers out of the equation. (LRG-S-37-E-8)

Comment: The NRC made it clear in the design basis threat -- regulations have been put through basically that they will not make licensees meet post-9/11 attacks. I mean, that is right in there, and that in fact the military has to deal with that. It is right in the document. So although the NRC's job is to increase not just public health and safety, but it is also to make us have confidence in the agency that they are doing their job. You are at an all time low, and you need to know that, because we don't have any confidence at this point, and that you say that the GEIS is separate. Well, we have experienced it as just schizophrenic, and if the process isn't stopped to actually deal with reality, then all you have is just a bunch of paperwork that someone can make look good in the end, and we are still stuck with the terrorism. And we are still stuck with the vulnerability, and all you have done is push a bunch of papers and said it is okay. And it is not okay with us, and they have increased security, and I am really glad for that. I am glad for everything that they do, but it is nowhere near enough, and I have no confidence in the Commission given the clearly political and bias stance that they are starting with. (LRG-S-30-BO-9)

Comment: And what is mentioned in this generic issue that the Mark-1's are the most flawed reactors in terms of a vulnerable attack on the reactor, and of course we have the Pilgrim reactor, and we have Millstone, and we have Vermont Yankee. They have fuel pools dangling.

I shouldn't say dangling, but they are supported 6 or 7 stories up in the air, and in effect an attack on one of them would give the best bang for the buck in certain ways, because what you would have is the whole thing crumbling to the ground, and our expert has estimated that an attack on Vermont Yankee, just a medium-sized reactor, would in fact contaminate 25,000 square miles, making that area uninhabitable for decades. Now, I think that this is a generic impact issue personally, but I may be biased because I lived there. (LRG-S-30-BO-4)

Comment: And no safe, terrorist-proof container or route has been found to transport the nation's stockpiles of irradiated fuel rods to the proposed Yucca Mountain, Nevada, site. (LRG-S-63-E-3)

Comment: Re-licensing should not be permitted until…there are strict standards for hardened dry cask storage that will require these casks to be able to resist a determined terrorist attack. (LRG-S-50-L-7)

Comment: Moving right along, with the reactors we have 103 predeployed dirty bombs. (LRG-S-06-AT-6)

Comment: I would like to encourage some method of ensuring that prior to a licensing for those plants that are currently -- and I am sure that there are many of them out there, and I know that Pilgrim is one of them, but that are utilizing very high density storage, which potentially should a mechanical problem or a personnel problem, or a terrorist act, god forbid, happen, the conclusion of that could be catastrophic to a wide area.

So one of the things that I would like to suggest is if we can strongly look at the dry cask storage as a passive way to hold our spent fuel without relying on mechanical means. (LRG-S-22-BO-4)

Comment: With respect to the terrorist threat and the Federal Government's disclosure that nuclear power plants are known targets, we need to reevaluate emergency planning at the local, State, and Federal levels. (LRG-S-26-BO-12)

Comment: Moreover, NRC studies have found possible impacts up to 500 miles from the sites in the event of a spent fuel pool fire. Yet PG&E tries to convince the public that terrorist attacks on Diablo are unlikely due to the unpopulated area within 5 miles around the plant. The NRC has every obligation to inform the public about the true ramifications of such an attack and should put a stop to misleading public relations statements by the operators. (LRG-S-66-E-4)

Response: *Security measures are dealt with on an ongoing basis and are therefore part of the current operating license basis. Prior to September 11, 2001, the security measures in place provided reasonable assurance that the health and safety of the public would be protected in*

the event of an attack that involved radiological sabotage. The security measures were designed to protect against the threats described in 10 CFR 73.1. However, since September 11, 2001, the defensive capability of the nuclear power industry has been significantly enhanced. The NRC issued orders requiring security enhancements, conducted a three-phase audit of licensees' security programs in the weeks following the terrorist attacks, improved the process for conducting background investigations of new employees at nuclear power facilities, and initiated a number of studies related to the protection of nuclear material and facilities. The NRC also initiated a number of studies on the effects of a crash of a large commercial aircraft into a nuclear power plant. The NRC has also issued more than 60 advisories to its licensees describing changes in the threat environment and providing guidance on ways to enhance security.

Major actions undertaken by the NRC since September 11, 2001, have included the following:

- *Ordering plant owners to increase physical security to defend against a more challenging adversarial threat,*
- *Requiring strict site access controls for personnel,*
- *Requiring licensees to conduct vehicle checks at greater stand-off distances,*
- *Improving liaison with Federal, State, and local agencies responsible for protection of the national critical infrastructure through integrated response planning,*
- *Enhancing communication and liaison with the intelligence community,*
- *Improving communication between military surveillance authorities, the NRC, and its licensees to prepare power plants and to effect safe shutdown should it be necessary,*
- *Ordering plant operators to improve their capability to respond to events involving explosions or fires,*
- *Enhancing readiness of security organizations by strengthening training and qualification programs for plant security forces,*
- *Enhancing force-on-force exercise to provide a more realistic test of plant capabilities to defend against an adversary force, and*
- *Working with national experts to predict the realistic consequences of terrorist attacks on nuclear facilities, including one from a large commercial aircraft. For the facilities analyzed, the results confirm a low likelihood both for damaging the reactor core and*

releasing radioactivity that could affect public health and safety. Even in the unlikely event of a radiological release due to a terrorist use of a large aircraft against a nuclear power plant, the studies indicate that there would be time to implement the required onsite mitigating actions. These results have also validated the offsite emergency planning basis.

In addition, the NRC works with a variety of other Federal agencies, in particular the Department of Homeland Security and the Homeland Security Council, to ensure that security around nuclear power plants is well coordinated and that responders are prepared if a significant event occurs. If an event were to occur, the NRC would coordinate the resources of more than 18 Federal agencies in response to any radiological emergency.

Comment: I know that some of these concerns about security issues and what not are maybe outside the scope of what you guys are charged with here tonight, but it is obviously a concern, and what I want to know is where is the opportunity for public participation in that part of the process. (LRG-S-31-BO-2)

Response: *The NRC's environmental review is confined to the environmental matters relevant to the extended period of operation requested by the applicant. Safety and security matters are outside scope of this review. The NRC considers public involvement in, and information about, our activities to be an essential element of our regulatory process and recognizes the public's interest in the proper regulation of the nuclear industry. Information on opportunities for public involvement can be obtained at: http://www.nrc.gov/public-involve.html. The comments provide no new information and, therefore, will not be evaluated further.*

Comment: Criticality of the vessels, I think that should be put in the information the next time. (LRG-S-08-AT-2)

Comment: I want to talk about on Page 16 of the transporting spent fuel, the pamphlet [NUREG/BR-011, dated 1987], and on Page 16 on the lower right-hand part of it where it talks about for the purpose of this study all of this material was assumed to be released from the cask, although in reality a large part of the fungible fraction would play out or adhere to the surface within the cask. (LRG-S-08-AT-1)

Comment: Quality Assurance for Cask Manufacture: The potential radiological impacts from dry cask storage systems are a direct function of the structural integrity of the casks when subjected to stress under normal and accident conditions. Allegations have been made to the NRC regarding certain manufacturing and design code violations, Quality Assurance program violations, and reliability problems of the casks. Since safety depends on performance of the casks to design standards, the environmental review for license renewal should discuss extended spent fuel storage onsite, including dry cask storage, and describe on a plant-specific

basis what assurances, for example, quality assurance programs, will be provided to help ensure that casks used for storing this fuel will be built to design specifications and will perform as designed. (LRG-S-60-E-9)

Response: *Transportation and storage casks are the subject of a separate licensing action and are outside the scope of the environmental review. An NRC-approved cask is one that has undergone a technical review of its safety aspects and been found to meet all of the NRC's requirements in 10 CFR Part 71. The comment provides no new information and, therefore, will not be evaluated further.*

Comment: There are other specific concerns we had related to environmental analysis that we felt were important to be looked at. They relate to looking at drought impact. We have in Georgia the issue of drought, those concerns come up some seasons, and flooding comes up, so flooding impacts are an issue as well, looking at the dams upstream and where there could be flooding occurring and some breakage that can be devastating below, to the reactor area below. (LRG-S-02-AT-11)

Comment: So the only additional items that I can tell you that I think really are missing in your rule, whether it's for 25 years or 60 years, one is climate change considerations. (LRG-S-04-AT-10)

Comment: I'm suggesting that the severe weather and parameters of our climate that are changing impact reactor operations, and if you look at Catawba having to warn the Public Service Commission in South Carolina that they might have to go off line because of the drought lowering the water levels in the Catawba River, raising the temperatures in Lake Wylie, making it nearly impossible for them to cool their reactors you will have a concrete example of why this should be included as both the generic and site-specific bases. (LRG-S-04-AT-11)

Comment: In your environmental assessments, it seems that you take into account the effect on the nuclear plant on the environment, but I have not seen a reversal, and the effect of projected environmental climate changes on the nuclear plant. And I think that this is an issue that should be looked at, because we pick up the paper and excepting our President, George Bush, who apparently doesn't read, it seems that it is pretty evident that we are seeing an increase, a rise, in ocean water levels, and more severe coastal storms, erosion, and there are all of these issues and projections that clearly should be assessed in looking at license renewals, particularly on a category of nuclear plants that are on the ocean and would expect to be subjected to this. (LRG-S-17-BO-12)

Comment: Despite ongoing warnings, the nuclear industry and the Nuclear Regulatory Commission have failed to thoroughly analyze the multiple environmental impacts these

accelerating climate changes will have on reactor operations, as well as the ways that it will change the type and magnitude of impact that the reactors have on their external surroundings.

Analysis of climate change must also include an analysis of the increased potential of Station Blackout by virtue of projected increased numbers of hurricanes, tornadoes, drought induced ground and forest fires, and other severe weather impacts...Because of the climatic impact on a variety of service and receiving water conditions (salt versus fresh, depth, available volumes, etc.) NIRS is opposed to categorization of the environmental impact as a Category 1 item. As each site can be uniquely impacted by climatic change thus NIRS contends that climatic changes need to be addressed as a Category 2 items. (LRG-S-62-E-12)

Comment: Less Than Thorough Analysis for Climate Change and the 20-year Extension of Nuclear Power Operations

The collective activity of the human race is in the process of altering the climate of the Earth. The nuclear industry does not dispute this fact and even goes so far as to make the claim that nuclear power can contribute to efforts to avert global warming. It is widely understood that mitigation can only change processes in the future, beyond the coming decade or two and perhaps longer. The effects of past human activity including air emissions will govern the changes in weather patterns now being documented and those for the license extension periods. The global outlook is increasing severity in weather patterns, particularly storms both in number and severity, increased temperatures, receiving water levels, precipitation and other variables. An article that appeared in the Washington Post linked higher temperatures from global warming to the melting of most of the Arctic's summer icecap by the end of the century. The three year international study indicated that ice around the North Pole shrunk by 7.4% in the past 25 years with a record small summer coverage in September 2002.

Global warming was recently documented to have significantly changed government operations related to nuclear waste management in Russia. The Atomic Energy Ministry had approved the construction of a US$70 million nuclear waste storage facility on Novaya Zemlya in June 2002. Climate change was cited as "instrumental in Russia's decision not to construct a nuclear waste storage facility on the island of Novaya Zemlya in the Arctic Ocean. The decision puts an end to plans Russia has been formulating for more than a decade."

Another area of concern is the once-through cooling system for nuclear power stations. Once-through cooling is widely used throughout the U.S. nuclear industry; 48 units rely exclusively on once-through cooling systems. Eleven units utilize a combination of once-through with cooling tower assistance. A typical once-through cooling system takes in on the order of 1 billion gallons of water per day per reactor unit. The water temperature must meet criteria to adequately service the condenser for the steam line in order to efficiently cool the reactor. Obviously, warm water is less efficient as a cooling agent. As the lake or river temperature goes

up, the ability to cool the steam exiting the turbine goes down. The condenser becomes less and less able to convert the steam back into water. The pressure inside the condenser rises (it is at a vacuum to the atmosphere to help it pull the steam out of the turbine). If the condenser pressure rises too far, the steam "loiters" in the turbine longer than it should. This can damage the turbine. So, the turbine automatically trips on high condenser pressure. As such, service water temperatures warmer than specified can lead to unsafe operational conditions within the reactor.

For example, as a result of the summer of 2003 heat wave, the French and other European nuclear power stations were adversely impacted by a severe heat wave which has increased river water temperatures by 9° F (5° C). The crisis over nuclear safety at French reactors as rising atmospheric and water temperatures soared demonstrates the concern for prolonged climate change impacts that can defeat efforts to adequately cool the nuclear power stations. Moreover, nuclear power station operators are seeking relaxations to thermal pollution permits in order to discharge warmer coolant water that in fact will have an adverse effect on aquatic and marine habitat and wildlife. (LRG-S-62-E-11)

Response: *The comments identify concerns related to the effects of climate change on operations and operational safety at nuclear power plants. The NRC's environmental review is confined to environmental matters relevant to the extended period of operation. Operational safety issues are considered outside the scope of this environmental review and, therefore, will not be evaluated further. The Revised GEIS will evaluate environmental impacts, including direct, indirect, and cumulative impacts, anticipated to occur during the license renewal period. As part of this evaluation, climate change and its potential effect on operational effects will be reviewed.*

Emergency Preparedness

Comment: Emergency preparedness of reactor communities and all communities on the transport route. (LRG-S-13-LA-6)

Comment: The assumptions about emergency planning that held sway when present reactors designed their emergency preparedness plans, they presumed sufficiency of a 10 mile zone, and no awareness of shadow evacuation, blissful ignorance of the power of coordinated, multi-pronged terrorism, to name a few, those assumptions are now antiquated and all licensees should be required to develop new, independently approved, emergency preparedness plans, which plan for today's conditions, and those anticipated at the end of their relicensed period. (LRG-S-16-BO-14)

Comment: One of the big, big concerns in all of our communities are evacuation plans, and emergency preparedeness, especially since 9/11. Everything has really, really changed. The

government has now said that we can give KI, potassium iodide, to a 20 mile radius. There are people who are very, very concerned that we couldn't even evacuate in a 10 mile radius. What are you planning to do about the shadow phenomenon of evacuation? (LRG-S-23-BO-1)

Comment: This is a very emotional issue for me and if I offend anyone, my comments are directed to the Nuclear Regulatory Commission and not to any individuals present. And my other prefacing comment is that I wanted to thank the Nuclear Regulatory Commission for reversing its position of 20 years, and no longer opposing the stockpiling of potassium iodide. Welcome to planet earth, and now I know that you really do care about human safety. (LRG-S-16-BO-1)

Comment: It really is a serious issue. These plans around plants have never ever been tested. There are exercises where the NRC and utility management get together at their EOCs, and their evacuation centers, and they have a paper plan. But if you talk to parents around nuclear facilities and you say to them, well, your children in the school are going to be bused to some reception center and you may be bused to another reception center, why can't we test these plans? It has been a problem that the NRC has just swept under the rug for years. I know that. I was a Selectwoman when the Seabrook Nuclear Power Plant's were written. I worked on those plans and I know that they cannot possibly work. The infrastructure is not there to evacuate people. On the 4th of July, we had 100,000 people on Hampton Beach at the fireworks. Your own FEMA, Ed Thomas, years ago said that evacuation plans could not work in Massachusetts. Governor Dukakis refused to submit those plans and I really think that it is an environmental issue. You may disagree with me, but I would like to have you certainly take a look at it. (LRG-S-23-BO-2)

Comment: This spring our town passed a public advisory question, asking that we be put in the emergency planning zone. We are 30 miles as the crow flies from Pilgrim. And your job is to ensure public safety and that the public is protected, and I don't even know why the plant was licensed in the first place because the public safety is not protected. (LRG-S-24-BO-1)

Comment: Former FEMA Director, James Lee Witt, was asked by the New York Governor to evaluate emergency planning for Indian Point, and concluded that, quote, the current radiological response system and capabilities are not adequate to protect the people from an unacceptable dose of radiation in the event of a release. His conclusions should be applied to other facilities and evaluated in the GEIS. For example, the radiological emergency plan covers the 10 mile radius around each reactor. However, radioactive collusion from a release can be dispersed much further. Additionally, population and traffic congestion is far different today and will be different over the next 30 years than when reactors were originally licensed. (LRG-S-26-BO-11)

Comment: We do not have realistic evacuation plans. If we are talking about a fast breaking attack, and then the ability to actually move people out of an area has to be addressed realistically, and if you are going to relicense, then there has to be proof that the plan is going to work. Otherwise, they can't get relicensing. (LRG-S-30-BO-5)

Comment: This [license renewal] is unconscionable considering the facts... that emergency plans are not worth the paper that they are written on. (LRG-S-37-E-6)

Comment: Serious attention must be given to the issue of emergency preparedness and evacuation plans for local communities surrounding nuclear reactors, in the event that a catastrophic accident or terrorist attack should occur. The recent brush with disaster at Davis-Besse and the clearly inadequate emergency and evacuation plans at the Indian Point reactor indicate that there are currently very real problems with reactors, reactor technology, licensees, emergency preparedness and NRC's ability to effectively regulate the nuclear industry. Yet, the NRC displays unchecked hubris in assuming that reactor structures and security are so very "robust," and the possibility of a catastrophic occurrence is so infinitesimally small, that the agency sees no need to impose any further "regulatory burden" upon licensees. I insist that if the NRC is to meet its primary mission to safeguard public health, more "regulatory burden" upon reactor licensees is essential. It is recklessly irresponsible for the NRC to even consider renewing the license for any reactor if these critical issues are not directly and substantively addressed. (LRG-S-43-E-3)

Response: *Emergency preparedness and planning are part of the current operating license and are outside the scope of the environmental analysis for license renewal. The NRC staff has an ongoing program for determining the adequacy of offsite emergency plans and is supported in that role by the Federal Emergency Management Agency (FEMA). Each nuclear plant must have an approved emergency plan in accordance with 10 CFR Part 50. Drills and exercises are conducted periodically to verify the adequacy of the plans. If a problem is identified, it is resolved in the context of the current operating license. The comments provide no new information and, therefore, will not be evaluated further. These comments will not result in a change in the GEIS.*

Economics and Need for Power

Comment: My question has to do with the assessment that occurs during relicensing, the relicensing process, assessment of the need for energy. And we addressed this some in our comments knowing that for Plant Hatch for example the Georgia Public Service Commission goes through a long-range planning process that it approves with a Southern Company affiliate every three years, and we know that the big picture was not including a relicensed Hatch, and the energy needs were stepped out and addressed through alternative supplies for the future, and it occurred to us that the NRC is not really the agency that would necessarily have the

expertise to even address that question. The FERC deals with that, and the SEC in some ways deals with holding companies, but the NRC that's not your area of expertise, yet it's a category addressed and brought up as environmental issue because obviously the extension of the life of a plant has tremendous environmental impact, an adverse impact over many years. You mentioned during introduction topics such as emergent plants and issues that need to be resolved, and unbundling, and services, and deregulation, and you know these are really big issues, and how is this being tackled if there's not that base of expertise to address those questions as part of relicensing. (LRG-S-02-AT-13)

Response: *The NRC does not address State-level energy planning decisions such as unbundling or deregulation. Instead, the NRC leaves issues of energy policy to other decisionmakers including State regulators, utility firms, and other Federal agencies, including the Federal Energy Regulatory Commission (FERC). The purpose of renewing an operating license is to provide the appropriate decisionmakers with the option of using the nuclear power plant to meet future energy needs beyond the current license term. The NRC's responsibility is to determine whether the environmental impacts of renewing a plant's license are so great that maintaining this option for future energy supply would be unreasonable. While deregulation and unbundling may affect utility economics or decision-making, it does not affect the environmental impacts of possible alternatives and, therefore, should not affect the NRC's review process. This comment addresses the scope of license renewal but provides no new information to the NRC, and will not be considered for the GEIS revision.*

Comment: Reliability and Integration with the Transmission System: The reliability of California's aging nuclear power plants is a significant issue in terms of their integration with and impact on the reliability of the entire transmission system serving the state. The nuclear power plants in California provide significant quantities of energy and capacity to the state's electrical system and help to maintain the overall stability of the grid. The environmental review during license renewal should evaluate on a plant-specific basis the potential impact on transmission system reliability from the closure of nuclear power plants in California. (LRG-S-60-E-7)

Response: *The NRC does not have jurisdiction over the reliability of the nation's electricity transmission system. Through provisions in the Energy Policy Act of 2005, this is a role that now belongs primarily to the North American Electric Reliability Corporation (NERC) and its regional councils. To varying degrees, other organizations like the FERC, as well as regional, State, and utility-level decisionmakers or regulators also play a role in grid reliability and integration. This comment is outside the regulatory scope of license renewal, and will not be considered in the GEIS revision.*

Comment: A cost benefit analysis of continued production of high-level radioactive waste in earthquake prone coastal zone. (LRG-S-13-LA-7)

Comment: Inappropriate exclusion of “economic” factors from the EIS process.

At the outset, we note that the NRC has artificially constrained the scope of its environmental review in a manner violative of the purpose of NEPA. At Section 1.7.2 and 1.7.3, the GEIS cites 10 C.F.R. 51.53(c)(2) and 51.95(c), in which the Commission effectively prohibits itself and any license renewal applicants from considering in the NEPA process the “need for power, the economic costs and benefits of the proposed action and economic costs and benefits of alternatives to the proposed action.” The prohibition applies specifically to plant-specific Supplemental EIS’s and applicants’ environmental reports, which eliminates these issues entirely from the environmental review process because the NRC does not consider them in the GEIS.

An EIS is not intended to provide environmental information in a vacuum, but to provide it in the context of an overall decisionmaking process. Its purpose is to integrate environmental considerations into the decisionmaking process, not to divorce them from other decisionmaking criteria and treat them as a thing apart. It is entirely out of keeping with this purpose for NRC to exclude from consideration the set of issues it terms “economic” and thus irrelevant to environmental review – but which in fact should be at the heart of the decision whether to continue to rely on nuclear power in any given location. Not only is consideration of cost of alternatives standard in every other sort of NEPA analysis, it is essential. How can the agency judge whether an alternative is “reasonable,” and hence must be included, without information regarding economic need and economic cost for that alternative? And how can the agency use the EIS process to weigh alternatives against one another when it has excluded from consideration essential factors in that weighing process, like the need for power and how much it costs?

This stacked deck is clearly convenient for the nuclear industry, which would prefer for the agency and the public to disregard the fact that nuclear power has repeatedly demonstrated itself to be one of the most costly and uneconomic sources of power on the market today; while renewable technologies have been steadily dropping in price. But it is not what the drafters of NEPA intended. The CEQ regulations clearly reflect an intention that economic considerations be considered in the weighing process – neither trumping the environmental considerations nor being completely divorced from them. See 40 C.F.R. 1502.23 (explaining the role of cost benefit analysis in an EIS, and stating, “In any event, an environmental impact statement should at least indicate those considerations, including factors not related to environmental quality, which are likely to be relevant and important to a decision.” Indeed, the GEIS itself, when dismissing certain mitigation measures as infeasible, cites cost of the measures weighted against potential environmental benefits (albeit using insufficient information) (see section 3.a., infra).

One of the issues identified by the NRC as “economic” – the need for power – is not even correctly characterized in that manner. In fact, the need for power is not merely an economic weighing factor in the decision, but should be at the heart of the “purpose and need” that drives the remainder of the EIS process. The Commission asserts in the “purpose and need” section of the GEIS, Section 1.3, that only states can ultimately determine whether power from a particular plant is needed. But if that is the case, NRC needs to work with state energy decisionmakers as co-lead agencies in the EIS process to determine the purpose and need for relicensing, either in the GEIS or on a case-by-case basis in Supplemental EISs. Abdicating an essential element of the EIS to non-federal decisionmakers, however, is not an option.

We therefore strongly encourage NRC to use the update of the GEIS as an opportunity to reconsider its ill-conceived regulations prohibiting the Commission and the regulated community from conducting the weighing process that NEPA intends. (LRG-S-61-E-1)

Response: *In drafting the initial GEIS, the NRC attempted to include considerations of economics and need for power, but State-level decisionmakers protested that the proposal overstepped the NRC’s jurisdiction (see* Federal Register 28467 *of June 5, 1996). As a result, current NRC regulations, specifically 10 CFR 51.95 (c)(2), note that the issue of need for power does not need to be considered in license renewal, nor do economic costs and benefits, except insofar as economic costs and benefits are essential to determining whether an alternative ought to be included for analysis. Given State decisionmakers’ comments and other input, including comments from CEQ and EPA, the NRC determined that “The purpose and need for the proposed action (renewal of an operating license) is to provide an option that allows for power generation capability beyond the term of a current nuclear power plant operating license to meet future system generating needs, as such needs may be determined by State, utility, and where authorized, Federal (other than NRC) decisionmakers.” The comment provides information on the scope of the GEIS, but the information is not new to the NRC. As such, it will not be evaluated further.*

Aging Management

Comment: While "incidents," accidents and disasters have been a part of the nuclear industry since its inception, many problems at reactors today are age-related. Nuclear reactors are machines that operate at enormous pressure and intensity, and every part must be able to withstand not only the pressure and intensity, but also the toxic and radioactive stew that flows within it. Rapid aging – and failure – of equipment is the nature of nuclear reactors. Owner-operators are generally reluctant to replace parts, as that often interferes with production (and revenue) and occasionally even requires a plant to shut down. Instead of placing a priority on safety and security, the industry is charging full speed ahead, applying for uprates (to run the plants at higher intensities) and license renewals. But most plants are showing serious signs of age-related stress and disrepair long before their initial license terms have expired. Even while

the NRC continues to add new problems to a list of nuclear plant aging concerns (the Generic Aging Lessons Learned, or "GALL" program), it smoothly approves the uprate and license renewal applications, as if they are unconnected. As pipes disintegrate, crack, and leak, and corrosion and acid degrade vital plant components, all parties simply attempt (but fail) to keep pace as problems arise. Neither the industry or the NRC appear capable to predict or prevent potentially catastrophic problems, as evidenced by the massive corrosion in the head of the Davis-Besse reactor. Clearly, time is an enemy of these facilities, and a terrorist attack is not required for a disaster to occur. (LRG-S-48-E-3)

Comment: So my concern with this environmental impact statement process is that it doesn't answer, or doesn't address all of the issues, all of the environmental issues of relicensing the nuclear power plants.

For one thing I've asked questions about the vessels themselves that are not replaced, that cannot be replaced, and in the refurbishing that goes on right now at Oconee (they have three vessel heads, one of them has been replaced, Unit 3). They can replace all six of the steam generators, but they cannot replace the vessels that hold the reactor cores, or the fuel rods, and the vessels expand and contract, and expand and contract, and age, and they become brittle, and I haven't had any kind of satisfactory answers as to how the integrity of that whole vessel is tested. And so if anyone can help me with that I certainly would like to know how the integrity of the entire vessel itself top to bottom, inside and out is tested for the strength and flexibility and holding that powerful radioactive chain reaction that goes on in the fission process. (LRG-S-03-AT-4)

Comment: To begin with their original license and their tech specs are not being adhered to now, and so therefore they have to be adhered to. As far as I understand both the NRC and the industry have stated unequivocally that they do not have the technology to identify cracks, and that a crack can develop to the point where the component can break in one cycle. (LRG-S-17-BO-6)

Response: *The NRC staff has determined that the reliability of equipment would not change substantially throughout the life of the plant, provided that the applicant has aging management programs that conform to 10 CFR Part 54. The NRC has a well established process for license renewal. The regulations governing license renewal are based on two guiding principles. The first principle is that the current regulatory process is adequate to ensure that the licensing basis of all operating plants provides and maintains an acceptable level of safety. The second principle is that the current plant-specific licensing basis must be maintained during the renewal term in the same manner, and to the same extent, as during the original license term. In addition, a renewed license will include conditions that must be met to ensure aging of structures and components important to safety are adequately managed so that the plant's current licensing basis is maintained during the period of extended operation. The adequacy of*

these programs will be addressed in the Safety Evaluation Report developed under 10 CFR Part 54.

Comment: [What is] the relationship between GALL process/product and this new venture? (LRG-S-53-E-1)

Response: *The purpose of the Generic Aging Lessons Learned (GALL) Report is to provide the technical basis for the* Standard Review Plan for License Renewal *(NUREG-1800). GALL contains the NRC staff's generic evaluation of the existing plant programs and documents the technical basis for determining where existing programs are adequate without modification and where existing programs should be augmented for the extended period of operation. The evaluation results documented in the GALL Report indicate that many of the existing programs are adequate to manage the aging effects for particular structures or components for license renewal without change. The GALL Report also contains recommendations on specific areas for which existing programs should be augmented for license renewal. NUREG-1800 and NUREG-1555,* Supplement 1 *(the* Environmental Standard Review Plan *that provides guidance in implementing 10 CFR Part 51) in combination provide for a complete safety and environmental review for license renewal. Aging management is considered outside the scope of this environmental review and, therefore, will not be evaluated further.*

Comment: The impact of aging components. The impacts of climate - seawater and salt air intrusion over time. (LRG-S-13-LA-8)

Comment: There are dangers of continued operation of aging nuclear power plants. (LRG-S-13-LA-14)

Comment: Under postulated accidents, quite clearly age degradation of components has to be considered…And we know that these power plants have aged more rapidly than expected. We know that there are problems with tubes, and we know that there are problems with embrittlement. We know that there are problems with cracking. Cracking of shrouds, and cracking of this, and cracking of that. Type-304 stainless steel, which is used throughout the BWRs, for example, are problematic. So you put old horses out to pasture if they are not holding up for the 40 years, and how are they supposed to hold up for another 20? How can you deal with this generically when our nuclear power plants are not made out of the same cookie cutters, and as the GAO identified there is a long list of counterfeit and substandard parts that is now in use throughout the industry.

So how can you say that this part is going to have a certain expected longevity or what have you when you don't even know whether it is the original part that it is supposed to be, and there has been no requirement to follow through to replace counterfeit and substandard parts. (LRG-S-17-BO-5)

Comment: The NRC does not have an effective aging management program as degradation caused by aging is revealed through failures, rather than through condition monitoring activities. This is a reflection of poor design and bad process. It points to the shortfall of requiring less than adequate inspection technology and personnel. Furthermore, it points to the lack of diverse and multiple inspection techniques, and a pressing need for more periodic random inspections of less vulnerable areas. (LRG-S-25-BO-4)

Comment: Our nuclear fleet is old and tired. As in any other industry the nuclear industry is experiencing problems with wear and tear of components and systems. The industry is now plagued with age-related deterioration of mechanisms unique to nuclear power operations. Chronic exposure to extreme radiation, heat, pressure, fatigue, and corrosive chemistry are combining to cause a long list of mechanical problems. As nuclear reactors get older and are relicensed the chance of failure of this equipment only increases. Aging management programs are intended to monitor the condition of the equipment and structures and implement repairs or replacements when necessary to prevent failures. The long list of aging related failures since 2000, occurring about once every 60 days, indicates beyond a reasonable doubt that the aging management programs are inadequate because they are not preventing equipment failures. The NRC must ascertain the effectiveness of aging management programs, and not just merely the scope of these programs before granting license extensions. (LRG-S-26-BO-6)

Comment: The NRC cannot continue with the generic approach to age-related degradation issues for reactor licensing extension. Our nation's reactors are not made from the same cookie cutter. In addition, many reactor components have been identified by the GAO as counterfeit and substandard. Therefore, industry experience is not applicable.
(LRG-S-26-BO-7)

Comment: Deterioration of material integrity under the onslaught of neutron bombardment and heat has already degraded the useful life of nuclear reactors. (LRG-S-42-E-2)

Comment: The GEIS should take seriously the effects of age degredation of components of nuclear plants and not rely upon the past reliability of plants. As these plants age, more and more unexpected failures are occurring, like the near-accident at Davis Besse. Scientists cannot accurately predict when such failures will occur as they have never dealt with plants this old before. (LRG-S-50-L-3)

Comment: Aging NPP issues: Plant aging issues have been addressed generically in NRC's "Generic Aging Lessons Learned (GALL) Report" (NUREG-1801), dated 2001, as well as in the ongoing NRC investigation and follow-up regarding corrosion problems in the Davis-Besse pressure vessel lid and South Texas Project Unit 1. As we enter an era of large numbers of

aging and refurbished nuclear power plants, it is important that NRC begin developing proactive methods for identifying safety problems before they become significant. There is a need for a system-wide review to identify preliminary or potential “anticipatory indicators” of safety problems related to plant aging to identify any trends before a major safety problem actually occurs. NRC should look at trends, such as repeated unplanned reactor shutdowns or component or system failures that might indicate that a safety problem is developing.

In license renewal application proceedings, individual plants should be evaluated in detail for aging-issues and trends, e.g., steam generator tube cracking, vessel head corrosion, and long-term problems and/or repeated failures in safety-related equipment including reactor coolant systems. In addition, the cumulative effects of marine salt spray corrosion should be evaluated for coastal plants, such as California’s nuclear power plants. (LRG-S-60-E-1)

Comment: Age-related Degradation Surprises Are More Likely With 20-Year License Extension at the Same Time the Agency Has Demonstrated To Shirk Its Regulatory Duty

The agency wrongly assumes that the license extension process and the associated environmental impact statements can adequately manage into the license extension period. In fact, events contradict such agency and industry assertions. The Davis-Besse operating license is explicitly conditional on the NRC's having found that the facility will operate in conformity with the Commission's regulations. There is ample evidence to the contrary. The Davis-Besse reactor was shut down from June 1985 through December 1986 undergoing extensive repairs to return the facility to conformance with the Commission's regulations. The Davis-Besse reactor has been shut down since February 2002 undergoing extensive repairs to return the facility to the Commission's regulations. NIRS contends that the agency and the example licensee have miserably failed in the present to adequately manage age-related degradation of safety-related systems, structures and components. NIRS, therefore, cites the failure of the NRC to hold the operators of the Davis-Besse nuclear power station to its licensing agreements with regard to boric acid corrosion control and the subsequent unanticipated near failure of the primary pressure boundary at the its reactor vessel pressure vessel head. The NRC has reneged on its fiduciary responsibility to protect the public from a nuclear reactor operating outside of federal safety regulations.

Furthermore, an Office of the Inspector General report released in December 2002 concludes that the agency allowed Davis-Besse operators to place the company’s production agenda ahead of maintain reactor safety margins.

Aging nuclear power stations failure rates should therefore be anticipated to follow a Bathtub Curve where component failure rates are likely to unpredictably increase as reactors age and enter into the Break-down phase.

Critical age-related degradation mechanisms are not adequately understood to make the claim that the agency can adequately manage degradation to the exclusion of contentions in a site specific license extension proceeding. The predictability of crack initiation and crack growth rates in safety related components is presently unreliable. (LRG-S-62-E-6)

Comment: There has been an increase in unanticipated failure events that have significantly undermined critical industry and agency-held assumptions regarding degradation mechanisms.

The public has therefore lost confidence in the NRC's willingness to regulate and enforce licensing commitments and corrective action programs. (LRG-S-62-E-7)

Comment: Pertinent to the issue of whether or not the country's fleet of 104 nuclear reactors should have their licensees renewed for another 20 years - and their actual and potential environmental impacts- is the question of how safely they have operated thus far. How much does NRC know about their rates of deterioration, and what are the risks when particular components do deteriorate? Considering the close call at Davis-Besse, the answer is not nearly enough. This is particularly relevant to NRC's GALL (Generic Aging Lessons Learned) program to evaluate age-related degradation at reactors. It appears that new issues surprise the NRC (such as those at Davis-Besse, and South Texas 1) at a rate faster than old issues are closed (such as steam generator tubes). Nonetheless, the NRC is all too accommodating to the industry as reactor licensees put in applications many years in advance. Davis-Besse is a relatively young reactor, which began operating in 1978. It has recently been listed as a planned 2004 applicant for license renewal, despite the fact that its original 40-year license does not expire until 2017. Is it not ill-advised to consider license renewals on reactors that have not even been able to demonstrate an ability to function safely for their original license term? (LRG-S-43-E-4)

Comment: Why were the cracks at Oconee discovered after renewal? (LRG-S-04-AT-7)

Comment: Why was Davis-Besse allowed to go for five years with corrosion? (LRG-S-04-AT-8)

Comment: I think that the situation about Davis-Besse in Ohio is really unfortunate. I know that the Babcock & Wilcox company manufactured that reactor vessel, and a reactor in Texas where the bottom, a big part of it has got problems, and so to restore the public's confidence in the NRC when utilities with a B&W reactor vessel comes up for an extension, a license extension, tell them, yeah, you can have one, but you've got to buy a new reactor vessel, period. It's just that simple. You want us to really look, look at the NRC, they're looking out for us. And that's what you tell them. (LRG-S-08-AT-4)

Comment: In a nutshell that's what needs to happen, because we the public would like to know that the NRC is in fact really looking out for us because I know the NRC crowd at Davis-Besse were there in response to finding a football-sized hole in a six-inch-thick head with "Oh," and so that tells us that they didn't really know, or they did know and they tried to hide the fact, and they were letting the owner of the -- they were letting the people at Davis-Besse get away with it, and it's just real fuzzy there. So we were really worried that it could be worse somewhere else, and we would love to know with confidence that that's not going to be the case any more. (LRG-S-08-AT-5)

Comment: What has happened is that as an agency you have by polite suggestion thrown to the industry the caveat of we need to know if you are in compliance, because we honestly don't know if you are. (LRG-S-25-BO-5)

Comment: But these plants were dangerous to begin with, and after 40 years of operation under intense pressures, they are now susceptible to a variety of stress-related defects, such as the corrosion that ate through six inches of steel and nearly produced a disaster at the Davis-Besse nuclear station in Ohio. (LRG-S-54-E-1)

Comment: In addition, we have concerns that the NRC does not focus enough on the inevitable changes over the span of the next 50 years.

Re-licensing at Diablo would assure full pools until at least 2050. The populations near the plant can't afford a reactive mode by the authorities. The NRC is fully aware of the catastrophic consequences of a pool fire or a maximum severe reactor incident. Seismology is a science in flux. Population patterns are changing. The aging factor at the plants is not yet fully understood. Who knows what the political development will be over the next half a century, what kind of weapons will be in the wrong hands? (LRG-S-66-E-5)

Comment: I came in after the renewal of the Oconee Nuclear Plant, but I have questions about that process that went on when the time when I wasn't looking at it.

There were some questions that the NRC had for the Oconee Plant, and I haven't seen any documents available in the reading room about the responses in the licensing processes, and some of them and the aging effects of corrosion on structural steel, the rebar, and embedded in the concrete because of the accumulation of ingressive water through the cracks in the concrete that weakens the containment structure, and another thing was thermal fatigue, the effects that it has on the containment heat renewal system.

And perhaps these things have been -- another thing is providing the effects of temperatures and radiation on structural properties of the reactor cavities of spent-fuel buildings, and the spent-fuel buildings, and I don't know whether it's because of 9/11 that these responses aren't

made public so that we don't know of any weaknesses that terrorists can get to, or what the reason is, but as someone concerned about what Duke Energy has to say in response to this, the fact that we might relicense them when we didn't hear how those issues were resolved. (LRG-S-03-AT-1)

Comment: What there also is in terms of the issues of age related degradation and also these power uprates that are going on, because in fact Vermont Yankee has gone for a 20 percent power uprate, and Pilgrim went for 1 or 2 percent. But Vermont Yankee is up there with the guys at this point now that GE has made it easier to operate larger amounts, and one of the issues in terms of the uprates and our concern is that in terms of an accident or an attack on a reactor, what the Union of Concerned Scientists has estimated is that 34 percent more contamination would be released into the environment, even though the uprate is only 20 percent, the amount of contamination released in an accident or in an attack would be 34 percent higher. That is an unacceptable increase in terms of vulnerability. (LRG-S-30-BO-6)

Response: *The NRC's environmental review is confined to environmental matters relevant to the extended period of operation requested by the applicant. Therefore, aging management is outside the scope of the environmental review. However, the license renewal inspection program consists of three separate inspections to support the decision on an application for license renewal. A scoping inspection and aging management inspection are conducted. An optional third inspection will be performed, if needed, to verify items identified by the NRC staff, Advisory Committee on Reactor Safeguards, and regional administrator that are needed to close open items from the technical review of the application or previous inspections. The inspection reports are available to the public through the NRC's Public Document Room in Washington, D.C.*

Comment: The plants were deemed by "Experts" to safely operate for 40 years. This too is now being ignored. Who are the "Experts" now busily doing the Companies bidding, when your job description is to protect the public. Who are the "Experts" with the mendacity to tell us that these plants can operate safely. (In spite of Bessie Davies and the numerous other "mishaps"). So now we have a new Department "aging management" .Is this to take charge of leaks, embrittlement, corrosions etc.? (LRG-S-41-E-2)

Response: *The Atomic Energy Act of 1954 specifies that licenses for commercial power reactors be granted for a 40-year period and allows for renewal of those licenses upon expiration of the original 40-year licensing period. The 40-year licensing period was not based on technical grounds or operating experience, rather it was based on economic and antitrust considerations. Current operational inspections ensure proper maintenance of leaks, corrosion, or embrittlement concerns. The license renewal inspection program, which is a separate programmatic action from current operational inspections and this environmental review, ensures that the applicant has demonstrated that adequate aging management practices are in*

place for components that will be in operation under the proposed renewed license. Aging management is considered outside the scope of this environmental review and, therefore, will not be evaluated further.

Comment: Therefore, age-related degradation issues must be reconsidered as Category 2 items where contentions are admissible under NEPA in site-specific license extension proceedings. (LRG-S-62-E-8)

Response: *An aging management review for selected systems, structures, and components is required by 10 CFR 54.21. The NRC must have reasonable assurance under 10 CFR 54.29 that the effects of aging on the functionality of structures and components during the period of extended operation will be conducted in accordance with the current licensing basis. The Category 2 terminology refers to categorization of the issues identified in Table B-1 of 10 CFR 51 Subpart A, Appendix B. Age-related degradation is not specifically called out as one of the issues in Table B-1. The NRC will reconsider the contents of Table B-1 after completion of the revised GEIS. Aging management is considered outside the scope of this environmental review and, therefore, will not be evaluated further.*

Comment: Plant Hatch does have serious problems that it faces. It has a cracked core shroud, it has a problem with overflowing waste, the ISFSI which was set up, the independent spent fuel storage installation was a concern that we raised during relicensing process.

We were told that along with a host of other major issues were not really part of the scope of the site-specific analysis that would be taken up to look at the relicensing of Plant Hatch, but rather those were generic issues. (LRG-S-02-AT-2)

Response: *The commenter is correct in stating that aging management issues, such as a cracked core shroud, and independent spent fuel storage installation issues were outside the scope of the environmental review performed for the Plant Hatch license renewal. However, those issues are handled under the safety review.. They are evaluated each and every time a licensee applies for a license renewal or separately during placement of an independent spent fuel storage installation. Plant-specific aging management issues are evaluated under the license renewal inspection program and its associated activities authorized by 10 CFR Part 54. The licensing requirements and the associated activities of independent spent fuel storage installations are authorized under 10 CFR Part 72. This environmental review is performed in accordance with 10 CFR Part 51. The comment provides no new information and, therefore, will not be evaluated further.*

Comment: All that generic approach accomplishes is to effectively eliminate site specific public participation and intervention in the relicensing proceedings on aging issues. In turn, this approach eliminates independent experts and public review of the potential impact of age

related degradation issues from the license extension process. It removes the affected public's discovery process and their ability to scrutinize and cross-examine industry and regulatory assumptions pertaining to aging safety components and public safety within the context of an adjudicatory proceeding. (LRG-S-26-BO-8)

Response: *The results of the NRC staff's safety review are available to the public. However, the highly technical nature of the staff's safety review does not lend itself to a public involvement process such as that used for the environmental review. As a result, there are no* Federal Register *notices related to an opportunity to comment on the safety review prior to its issuance. However, a draft Safety Evaluation Report is available electronically from the Publicly Available Records System (PARS) component of the NRC's Agency-wide Documents Access and Management System (ADAMS). The ADAMS Public Electronic Reading Room is accessible from the NRC Web site at http://www.nrc.gov/reading-rm/adams.html. Additionally, the public can provide comments to the Advisory Committee on Reactor Safeguards (ACRS) on the NRC staff's review of the license renewal application in advance of the ACRS meeting.*

In addition, any person who believes he or she would be adversely affected by a specific reactor license renewal may request a hearing. Members of the public may also petition the Commission, in accordance with the provisions of 10 CFR 2.206, for consideration of safety issues during current operation and the period of extended operation of the plant.

Potential Allegations

Several potential allegations were raised at the LR GEIS public scoping meetings and were referred to the allegations coordinator.

Other

Comment: I have a question about liability. When the public raises a concern before the NRC, and let's just look at in dealing with generic environmental impact, and the NRC does not adequately set up protections that address those concerns that the public raised, who pays for the damage in terms of contaminated waterways that result and the host of environmental impacts that occur that can impact people's livelihood and their health? Who covers that liability? (LRG-S-02-AT-1)

Response: *The consideration of liability is outside the scope of this document and is an NRC policy issue. However, regulations are in place to minimize the occurrence and consequences of accidents and to respond to them if they occurred. The missions of the NRC include the protection of public health and safety and protection of the environment. The comment provides no new information and, therefore, will not be evaluated further.*

Appendix B

Comparison of Environmental Issues in the GEIS Revision to Issues in Table B-1 of 10 CFR Part 51

Appendix B

Comparison of Environmental Issues in the GEIS Revision to Issues in Table B-1 of 10 CFR Part 51

This appendix provides a comparison of the issues presented in the GEIS revision and those issues presented in Table B-1 of 10 CFR Part 51. For the most part, Table B-1 of 10 CFR Part 51 reflected the findings of the 1996 GEIS, although a few issues were modified or added after publication of the GEIS (e.g., environmental justice). The issues evaluated in the GEIS revision, their significance level, and their Category designation were presented in Table 2.1-1 and are included in Table B-1. Table B-1 of this appendix indicates the relationship between these issues and those in 10 CFR Part 51. Table B-2 shows those issues in Table B-1 of 10 CFR Part 51 that were eliminated from further consideration in the GEIS revision.

Table B-1. Environmental Issues and Findings in the GEIS Revision, and Related Issues and Findings in Table B-1 of 10 CFR Part 51

GEIS Revision Issue	Findings in the GEIS Revision	Related Issue(s) in Table B-1 of 10 CFR Part 51	Findings in Table B-1 of 10 CFR Part 51
Land Use			
Onsite land use	Small impact (Category 1). Changes in onsite land use from continued operations and refurbishment associated with the license renewal term would be a small fraction of any nuclear power plant site and would involve only land that is controlled by the licensee.	Onsite land use	Small (Category 1). Projected onsite land use changes required during refurbishment and the renewal period would be a small fraction of any nuclear power plant site and would involve land that is controlled by the applicant.
Offsite land use	Small impact (Category 1). Offsite land use would not be affected from continued operations and refurbishment associated with the license renewal term.	Offsite land use (refurbishment)	Small or moderate (Category 2). Impacts may be of moderate significance at plants in low population areas.
		Offsite land use (license renewal term)	Small, moderate, or large (Category 2). Significant changes in land use may be associated with population and tax revenue changes resulting from license renewal.
Offsite land use in transmission line rights-of-way (ROWs)	Small impact (Category 1). Use of transmission line ROWs from continued operations and refurbishment associated with the license renewal term would continue with no change in land use restrictions.	Power line right-of-way	Small (Category 1). Ongoing use of power line ROWs would continue with no change in restrictions. The effects of these restrictions are of small significance.

Table B-1. (cont.)

GEIS Revision Issue	Findings in the GEIS Revision	Related Issue(s) in Table B-1 of 10 CFR Part 51	Findings in Table B-1 of 10 CFR Part 51
Visual Resources			
Aesthetic impacts	Small impact (Category 1). No important changes to the visual appearance of plant structures or transmission lines are expected from continued operations and refurbishment associated with the license renewal term.	Aesthetic impacts (refurbishment)	Small (Category 1). No significant impacts are expected during refurbishment.
		Aesthetic impacts (license renewal term)	Small (Category 1). No significant impacts are expected during the license renewal term.
		Aesthetic impacts of transmission lines (license renewal term)	Small (Category 1). No significant impacts are expected during the license renewal term.
Air Quality			
Air quality (nonattainment and maintenance areas)	Small, moderate, or large impact (Category 2). Air quality impacts of continued operations and refurbishment activities associated with the license renewal term are expected to be small. However, emissions during these activities could be a cause for concern at locations in or near air quality nonattainment or maintenance areas. The significance of the impact cannot be determined without considering the compliance status of each site and the activities that could occur.	Air quality during refurbishment (nonattainment and maintenance areas)	Small, moderate, or large (Category 2). Air quality impacts from plant refurbishment associated with license renewal are expected to be small. However, vehicle exhaust emissions could be cause for concern at locations in or near nonattainment or maintenance areas. The significance of the potential impact cannot be determined without considering the compliance status of each site and the numbers of workers

Table B-1. (cont.)

GEIS Revision Issue	Findings in the GEIS Revision	Related Issue(s) in Table B-1 of 10 CFR Part 51	Findings in Table B-1 of 10 CFR Part 51
Air Quality (cont.)			
Air quality (nonattainment and maintenance areas) (cont.)	These impacts would be short-lived and cease after projects were completed. Emissions from testing emergency diesel generators and fire pumps and from routine operations of boilers used for space heating would not be a concern, even for those plants located in or adjacent to nonattainment areas. Although particulate emissions from cooling towers may be a concern for a very limited number of plants located in States that regulate such emissions, the impacts in even these worst-case situations have been small.		expected to be employed during the outage.
Air quality effects of transmission lines	Small (Category 1). Production of ozone and oxides of nitrogen is insignificant and does not contribute measurably to ambient levels of these gases.	Air quality effects of transmission lines	Small (Category 1). Production of ozone and oxides of nitrogen is insignificant and does not contribute measurably to ambient levels of these gases.
Noise			
Noise impacts	Small impact (Category 1). Noise levels would remain below regulatory guidelines for offsite receptors during continued operations and refurbishment associated with the license renewal term.	Noise	Small (Category 1). Noise has not been found to be a problem at operating plants and is not expected to be a problem at any plant during the license renewal term.

Table B-1. (cont.)

GEIS Revision Issue	Findings in the GEIS Revision	Related Issue(s) in Table B-1 of 10 CFR Part 51	Findings in Table B-1 of 10 CFR Part 51
Geology and Soils			
Impacts of nuclear plants on geology and soils	Small impact (Category 1). Impacts on geology and soils would be small at all nuclear plants if best management practices were employed to reduce erosion associated with continued operations and refurbishment.	Not addressed	Not applicable
Surface Water			
Surface-water use and quality	Small impact (Category 1). Impacts are expected to be negligible if best management practices are employed to control soil erosion and spills. Water use associated with continued operation and refurbishment projects for license renewal would not increase significantly or would be reduced if a plant outage is necessary to accomplish the action.	Impacts of refurbishment on surface water quality (all plants)	Small (Category 1). Impacts are expected to be negligible during refurbishment because best management practices are expected to be employed to control soil erosion and spills.
		Impacts of refurbishment on surface water use (all plants)	Small (Category 1). Water use during refurbishment will not increase appreciably or will be reduced during plant outage.
Altered current patterns at intake and discharge structures	Small impact (Category 1). Altered current patterns would be limited to the area in the vicinity of the intake and discharge structures. These impacts have been small at operating nuclear power plants.	Altered current patterns at intake and discharge structures (all plants)	Small (Category 1). Altered current patterns have not been found to be a problem at operating nuclear power plants and are not expected to be a problem during the license renewal term.

Table B-1. (cont.)

GEIS Revision Issue	Findings in the GEIS Revision	Related Issue(s) in Table B-1 of 10 CFR Part 51	Findings in Table B-1 of 10 CFR Part 51
Surface Water (cont.)			
Altered salinity gradients	Small impact (Category 1). Effects on salinity gradients would be limited to the area in the vicinity of the intake and discharge structures. These impacts have been small at operating nuclear power plants.	Altered salinity gradients (all plants)	Small (Category 1). Salinity gradients have not been found to be a problem at operating nuclear power plants and are not expected to be a problem during the license renewal term.
Altered thermal stratification of lakes	Small impact (Category 1). Effects on thermal stratification would be limited to the area in the vicinity of the intake and discharge structures. These impacts have been small at operating nuclear power plants.	Altered thermal stratification of lakes (all plants)	Small (Category 1). Generally, lake stratification has not been found to be a problem at operating nuclear power plants and is not expected to be a problem during the license renewal term.
Scouring caused by discharged cooling water	Small impact (Category 1). Scouring effects would be limited to the area in the vicinity of the intake and discharge structures. These impacts have been small at operating nuclear power plants.	Scouring caused by discharged cooling water (all plants)	Small (Category 1). Scouring has not been found to be a problem at most operating nuclear power plants and has caused only localized effects at a few plants. It is not expected to be a problem during the license renewal term.
Discharge of metals in cooling system effluent	Small impact (Category 1). Discharges of metals have not been found to be a problem at operating nuclear power plants with cooling-tower-based heat dissipation systems and have been satisfactorily mitigated at other plants. Discharges are monitored as part of the National	Discharge of other metals in waste water (all plants)	Small (Category 1). These discharges have not been found to be a problem at operating nuclear power plants with cooling-tower-based heat dissipation systems and have been satisfactorily mitigated at

Table B-1. (cont.)

GEIS Revision Issue	Findings in the GEIS Revision	Related Issue(s) in Table B-1 of 10 CFR Part 51	Findings in Table B-1 of 10 CFR Part 51
Surface Water (cont.)			
Discharge of metals in cooling system effluent (cont.)	Pollutant Discharge Elimination System (NPDES) permit process.		other plants. They are not expected to be a problem during the license renewal term.
Discharge of biocides, sanitary wastes, and minor chemical spills	Small impact (Category 1). The effects of these discharges are regulated by State and Federal environmental agencies. Discharges are monitored as part of the NPDES permit process. These impacts have been small at operating nuclear power plants.	Discharge of chlorine or other biocides (all plants)	Small (Category 1). Effects are not a concern among regulatory and resource agencies, and are not expected to be a problem during the license renewal term.
		Discharge of sanitary wastes and minor chemical spills (all plants)	Small (Category 1). Effects are readily controlled through NPDES permit rules and periodic modifications, if needed, and are not expected to be a problem during the license renewal term.
Water use conflicts (plants with once-through cooling systems)	Small impact (Category 1). These conflicts have not been found to be a problem at operating nuclear power plants with once-through heat dissipation systems.	Water use conflicts (plants with once-through cooling systems)	Small (Category 1). These conflicts have not been found to be a problem at operating nuclear power plants with once-through heat dissipation systems.
Water use conflicts (plants with cooling ponds or cooling towers using make-up water from a river with low flow)	Small or moderate impact (Category 2). Impacts could be of small or moderate significance, depending on make-up water requirements, water availability, and competing water demands.	Water use conflicts (plants with cooling ponds or cooling towers using makeup water from a river)	Small or moderate (Category 2). The issue has been a concern at nuclear power plants with cooling ponds and at plants with cooling towers. Impacts on instream and riparian

Table B-1. (cont.)

GEIS Revision Issue	Findings in the GEIS Revision	Related Issue(s) in Table B-1 of 10 CFR Part 51	Findings in Table B-1 of 10 CFR Part 51
Surface Water (cont.)			
Water use conflicts (cont.)			communities near these plants could be of moderate significance in some situations.
Effects of dredging on water quality	Small impact (Category 1). Dredging to remove accumulated sediments in the vicinity of intake and discharge structures and to maintain barge shipping has not been found to be a problem for surface water quality. Dredging is performed under permit from the U.S. Army Corps of Engineers.	Not addressed	Not applicable
Temperature effects on sediment transport capacity	Small impact (Category 1). These effects have not been found to be a problem at operating nuclear power plants and are not expected to be a problem during the license renewal term.	Temperature effects on sediment transport capacity	Small (Category 1). These effects have not been found to be a problem at operating nuclear power plants and are not expected to be a problem during the license renewal term.
Effects of cooling water discharge on dissolved oxygen, gas supersaturation, and eutrophication	Addressed in Aquatic Resources	Eutrophication (all plants)	Small (Category 1). Eutrophication has not been found to be a problem at operating nuclear power plants and is not expected to be a problem during the license renewal term.

Table B-1. (cont.)

GEIS Revision Issue	Findings in the GEIS Revision	Related Issue(s) in Table B-1 of 10 CFR Part 51	Findings in Table B-1 of 10 CFR Part 51
Groundwater			
Groundwater use and quality	Small impact (Category 1). Extensive dewatering is not anticipated from continued operations and refurbishment activities associated with the license renewal term. The application of best management practices for handling any materials produced or used during activities would reduce impacts.	Impacts of refurbishment on groundwater use and quality	Small (Category 1). Extensive dewatering during the original construction on some sites will not be repeated during refurbishment on any sites. Any plant wastes produced during refurbishment will be handled in the same manner as in current operating practices and are not expected to be a problem during the license renewal term.
Groundwater use conflicts (plants that withdraw less than 100 gallons per minute [gpm])	Small impact (Category 1). Plants that withdraw less than 100 gpm are not expected to cause any groundwater use conflicts.	Groundwater use conflicts (potable and service water; plants that use <100 gpm)	Small (Category 1). Plants using less than 100 gpm are not expected to cause any groundwater use conflicts.
Groundwater use conflicts (plants that withdraw more than 100 gpm, including those using Ranney wells)	Small, moderate, or large impact (Category 2). Plants that withdraw more than 100 gpm could cause groundwater use conflicts with nearby groundwater users.	Groundwater use conflicts (plants using cooling towers withdrawing makeup water from a small river)	Small, moderate, or large (Category 2). Plants that use more than 100 gpm may cause groundwater use conflicts with nearby groundwater users.
	Rolled into issue above:	Groundwater use conflicts (Ranney wells)	Small, moderate, or large (Category 2). Ranney wells can result in potential ground-water depression beyond the site boundary. Impacts of large groundwater withdrawal for cooling tower makeup at nuclear power plants using

Table B-1. (cont.)

GEIS Revision Issue	Findings in the GEIS Revision	Related Issue(s) in Table B-1 of 10 CFR Part 51	Findings in Table B-1 of 10 CFR Part 51
Groundwater (cont.)			
Groundwater use conflicts (cont.)			Ranney wells must be evaluated at the time of application for license renewal.
Groundwater use conflicts (plants with closed-cycle cooling systems that withdraw make-up water from a river)	Small, moderate, or large impact (Category 2). Water use conflicts could result from water withdrawals from rivers during low-flow conditions, which may affect aquifer recharge. The significance of impacts would depend on make-up water requirements, water availability, and competing water demands.	Groundwater use conflicts (plants using cooling towers withdrawing makeup water from a small river)	Small, moderate, or large (Category 2). Water use conflicts may result from surface water withdrawals from small water bodies during low-flow conditions which may affect aquifer recharge, especially if other groundwater or upstream surface water users come on line before the time of license renewal.
Groundwater quality degradation resulting from water withdrawals	Small impact (Category 1). Groundwater withdrawals at operating nuclear power plants would not contribute significantly to groundwater quality degradation.	Groundwater quality degradation (Ranney wells)	Small (Category 1). Ground-water quality at river sites may be degraded by induced infiltration of poor-quality river water into an aquifer that supplies large quantities of reactor cooling water. However, the lower quality infiltrating water would not preclude the current uses of groundwater and is not expected to be a problem during the license renewal term.

Table B-1. (cont.)

GEIS Revision Issue	Findings in the GEIS Revision	Related Issue(s) in Table B-1 of 10 CFR Part 51	Findings in Table B-1 of 10 CFR Part 51
Groundwater (cont.)			
Groundwater quality degradation (cont.)		Groundwater quality degradation (saltwater intrusion)	Small (Category 1). Nuclear power plants do not contribute significantly to saltwater intrusion.
Groundwater quality degradation (plants with cooling ponds in salt marshes)	Small impact (Category 1). Sites with closed-cycle cooling ponds could degrade groundwater quality; however, because groundwater in salt marshes is brackish, this is not a concern for plants located in salt marshes.	Groundwater quality degradation (cooling ponds in salt marshes)	Small (Category 1). Sites with closed-cycle cooling ponds may degrade groundwater quality. Because water in salt marshes is brackish, this is not a concern for plants located in salt marshes.
Groundwater quality degradation (plants with cooling ponds at inland sites)	Small, moderate, or large impact (Category 2). Sites with closed-cycle cooling ponds could degrade groundwater quality. For plants located inland, the quality of the groundwater in the vicinity of the ponds could be affected. The significance of the impact would depend on cooling pond water quality, site hydrogeologic conditions (including the interaction of surface water and groundwater), and the location, depth, and pump rate of water wells.	Groundwater quality degradation (cooling ponds at inland sites)	Small, moderate, or large (Category 2). Sites with closed-cycle cooling ponds may degrade groundwater quality. For plants located inland, the quality of the groundwater in the vicinity of the ponds must be shown to be adequate to allow continuation of current uses.
Groundwater and soil contamination	Small or moderate impact (Category 2). Industrial practices involving the use of solvents, hydrocarbons, heavy metals, or other chemicals and unlined wastewater lagoons have the potential to contaminate site groundwater, soil,	Not addressed	Not applicable

Table B-1. (cont.)

GEIS Revision Issue	Findings in the GEIS Revision	Related Issue(s) in Table B-1 of 10 CFR Part 51	Findings in Table B-1 of 10 CFR Part 51
Groundwater (cont.)			
Groundwater and soil contamination (cont.)	and subsoil. Contamination is subject to State- and U.S. Environmental Protection Agency-regulated cleanup and monitoring programs.		
Radionuclides released to groundwater	Small or moderate impact (Category 2). Underground system leaks of process water have been discovered in recent years at several plants. Groundwater protection programs have been established at all operating nuclear power plants.	Not addressed	Not applicable
Terrestrial Resources			
Impacts of continued plant operations on terrestrial ecosystems	Small, moderate, or large impact (Category 2). Continued operations, refurbishment, and maintenance activities are expected to keep terrestrial communities in their current condition. Application of best management practices would reduce the potential for impacts. The magnitude of impacts would depend on the nature of the activity, the status of the resources that could be affected, and the effectiveness of mitigation.	Refurbishment impacts	Small, moderate, or large (Category 2). Refurbishment impacts are insignificant if no loss of important plant and animal habitat occurs. However, it cannot be known whether important plant and animal communities may be affected until the specific proposal is presented with the license renewal application.
Exposure of terrestrial organisms to radionuclides	Small impact (Category 1). Doses to terrestrial organisms are expected to be well below exposure guidelines developed to protect these organisms.	Not addressed	Not applicable

Table B-1. (cont.)

GEIS Revision Issue	Findings in the GEIS Revision	Related Issue(s) in Table B-1 of 10 CFR Part 51	Findings in Table B-1 of 10 CFR Part 51
Terrestrial Resources (cont.)			
Cooling system impacts on terrestrial resources (plants with once-through cooling systems or cooling ponds)	Small impact (Category 1). No adverse effects to terrestrial plants or animals have been reported as a result of increased water temperatures, fogging, humidity, or reduced habitat quality. Due to the low concentrations of contaminants in cooling system effluents, uptake and accumulation of contaminants in the tissues of wildlife exposed to the contaminated water or aquatic food sources are not expected to be significant issues.	Cooling pond impacts on terrestrial resources	Small (Category 1). Impacts of cooling ponds on terrestrial ecological resources are considered to be of small significance at all sites.
Cooling tower impacts on plant communities (plants with cooling towers)	Small impact (Category 1). Impacts from salt drift, icing, fogging, or increased humidity associated with cooling tower operation have the potential to affect adjacent plant communities, but these impacts have been small at operating nuclear power plants and are not expected to change over the license renewal term.	Cooling tower impacts on crops and ornamental vegetation	Small (Category 1). Impacts from salt drift, icing, fogging, or increased humidity associated with cooling tower operation have not been found to be a problem at operating nuclear power plants and are not expected to be a problem during the license renewal term.
		Cooling tower impacts on native plants	Small (Category 1). Impacts from salt drift, icing, fogging, or increased humidity associated with cooling tower operation have not been found to be a problem at operating nuclear power plants and are not expected to be a problem during the license renewal term.

Table B-1. (cont.)

GEIS Revision Issue	Findings in the GEIS Revision	Related Issue(s) in Table B-1 of 10 CFR Part 51	Findings in Table B-1 of 10 CFR Part 51
Terrestrial Resources (cont.)			
Bird collisions with cooling towers and transmission lines	Small impact (Category 1). Bird collisions with cooling towers and transmission lines occur at rates that are unlikely to affect local or migratory populations.	Bird collisions with cooling towers	Small (Category 1). These collisions have not been found to be a problem at operating nuclear power plants and are not expected to be a problem during the license renewal term.
		Bird collisions with power lines	Small (Category 1). Impacts are expected to be of small significance at all sites.
Water use conflicts with terrestrial resources (plants with cooling ponds or cooling towers using make-up water from a river)	Small or moderate impact (Category 2). Impacts on terrestrial resources in riparian communities affected by water use conflicts could be of moderate significance in some situations.	Water use conflicts (plants with cooling ponds or cooling towers using makeup water from a river)	Small or moderate (Category 2). The issue has been a concern at nuclear power plants with cooling ponds and at plants with cooling towers. Impacts on instream and riparian communities near these plants could be of moderate significance in some situations.
Transmission line ROW management impacts on terrestrial resources	Small impact (Category 1). Continued ROW management during the license renewal term is expected to keep terrestrial communities in their current condition. Application of best management practices would reduce the potential for impacts.	Power line right-of-way management (cutting and herbicide application)	Small (Category 1). The impacts of right-of-way maintenance on wildlife are expected to be of small significance at all sites.

Table B-1. (cont.)

GEIS Revision Issue	Findings in the GEIS Revision	Related Issue(s) in Table B-1 of 10 CFR Part 51	Findings in Table B-1 of 10 CFR Part 51
Terrestrial Resources (cont.)			
Transmission line ROW management impacts on terrestrial resources (cont.)		Floodplains and wetland on power line right of way	Small (Category 1). Periodic vegetation control is necessary in forested wetlands underneath power lines and can be achieved with minimal damage to the wetland. No significant impact is expected at any nuclear power plant during the license renewal term.
Electromagnetic fields (EMFs) on flora and fauna (plants, agricultural crops, honeybees, wildlife, livestock)	Small (Category 1). No significant impacts of EMFs on terrestrial flora and fauna have been identified. Such effects are not expected to be a problem during the license renewal term.	Impacts of electromagnetic fields on flora and fauna (plants, agricultural crops, honeybees, wildlife, livestock)	Small (Category 1). No significant impacts of EMFs on terrestrial flora and fauna have been identified. Such effects are not expected to be a problem during the license renewal term.
Aquatic Resources			
Impingement and entrainment of aquatic organisms (plants with once-through cooling systems or cooling ponds)	Small, moderate, or large impact (Category 2). The impacts of impingement and entrainment are small at many plants but may be moderate or even large at a few plants with once-through and cooling-pond cooling systems, depending on cooling system withdrawal rates and volumes and the aquatic resources at the site.	Impingement of fish and shellfish (plants with once-through cooling and cooling-pond heat dissipation systems)	Small, moderate, or large (Category 2). The impacts of impingement are small at many plants but may be moderate or even large at a few plants with once-through and cooling-pond cooling systems.

Table B-1. (cont.)

GEIS Revision Issue	Findings in the GEIS Revision	Related Issue(s) in Table B-1 of 10 CFR Part 51	Findings in Table B-1 of 10 CFR Part 51
Aquatic Resources (cont.)			
Impingement and entrainment of aquatic organisms (cont.)		Entrainment of fish and shellfish in early life stages (plants with once-through and cooling-pond heat dissipation systems)	Small, moderate, or large (Category 2). The impacts of entrainment are small at many plants but may be moderate or even large at a few plants with once-through and cooling-pond cooling systems. Further, ongoing efforts in the vicinity of these plants to restore fish populations may increase the numbers of fish susceptible to intake effects during the license renewal period, such that entrainment studies conducted in support of the original license may no longer be valid.
		Entrainment of phytoplankton and zooplankton (all plants)	Small (Category 1). Entrainment of phytoplankton and zooplankton has not been found to be a problem at operating nuclear power plants and is not expected to be a problem during the license renewal term.

Table B-1. (cont.)

GEIS Revision Issue	Findings in the GEIS Revision	Related Issue(s) in Table B-1 of 10 CFR Part 51	Findings in Table B-1 of 10 CFR Part 51
Aquatic Resources (cont.)			
Impingement and entrainment of aquatic organisms (plants with cooling towers)	Small impact (Category 1). Impingement and entrainment rates are lower at plants that use closed-cycle cooling with cooling towers because the rates and volumes of water withdrawal needed for makeup are minimized.	Impingement of fish and shellfish (plants with cooling-tower-based heat dissipation systems)	Small (Category 1). The impingement has not been found to be a problem at operating nuclear power plants with this type of cooling system and is not expected to be a problem during the license renewal term.
		Entrainment of fish and shellfish in early life stages (plants with cooling-tower-based heat dissipation systems)	Small (Category 1). Entrainment of fish has not been found to be a problem at operating nuclear power plants with this type of cooling system and is not expected to be a problem during the license renewal term.
		Entrainment of phytoplankton and zooplankton (all plants)	Small (Category 1). Entrainment of phytoplankton and zooplankton has not been found to be a problem at operating nuclear power plants and is not expected to be a problem during the license renewal term.

Table B-1. (cont.)

GEIS Revision Issue	Findings in the GEIS Revision	Related Issue(s) in Table B-1 of 10 CFR Part 51	Findings in Table B-1 of 10 CFR Part 51
Aquatic Resources (cont.)			
Thermal impacts on aquatic organisms (plants with once-through cooling systems or cooling ponds)	Small, moderate, or large impact (Category 2). Most of the effects associated with thermal discharges are localized and are not expected to affect overall stability of populations or resources. The magnitude of impacts, however, would depend on site-specific thermal plume characteristics and the nature of aquatic resources in the area.	Cold shock (all plants)	Small (Category 1). Cold shock has been satisfactorily mitigated at operating nuclear plants with once-through cooling systems, has not endangered fish populations or been found to be a problem at operating nuclear power plants with cooling towers or cooling ponds, and is not expected to be a problem during the license renewal term.
		Thermal plume barrier to migrating fish (all plants)	Small (Category 1). Thermal plumes have not been found to be a problem at operating nuclear power plants and are not expected to be a problem during the license renewal term.
		Heat shock (plants with once-through and cooling-pond heat dissipation systems)	Small, moderate, or large (Category 2). Because of continuing concerns about heat shock and the possible need to modify thermal discharges in response to changing environmental conditions, the impacts may be of moderate or large significance at some plants.

Table B-1. (cont.)

GEIS Revision Issue	Findings in the GEIS Revision	Related Issue(s) in Table B-1 of 10 CFR Part 51	Findings in Table B-1 of 10 CFR Part 51
Aquatic Resources (cont.)			
Thermal impacts (cont.)		Distribution of aquatic organisms (all plants)	Small (Category 1). Thermal discharge may have localized effects but is not expected to affect the larger geographical distribution of aquatic organisms.
		Premature emergence of aquatic insects (all plants)	Small (Category 1). Premature emergence has been found to be a localized effect at some operating nuclear power plants but has not been a problem and is not expected to be a problem during the license renewal term.
Thermal impacts on aquatic organisms (plants with cooling towers)	Small impact (Category 1). Thermal effects associated with plants that use cooling towers are small because of the reduced amount of heated discharge.	Cold shock (all plants)	Small (Category 1). Cold shock has been satisfactorily mitigated at operating nuclear plants with once-through cooling systems, has not endangered fish populations or been found to be a problem at operating nuclear power plants with cooling towers or cooling ponds, and is not expected to be a problem during the license renewal term.

Table B-1. (cont.)

GEIS Revision Issue	Findings in the GEIS Revision	Related Issue(s) in Table B-1 of 10 CFR Part 51	Findings in Table B-1 of 10 CFR Part 51
Aquatic Resources (cont.)			
Thermal impacts (cont.)		Thermal plume barrier to migrating fish (all plants)	Small (Category 1). Thermal plumes have not been found to be a problem at operating nuclear power plants and are not expected to be a problem during the license renewal term.
		Heat shock (plants with cooling-tower-based heat dissipation systems)	Small (Category 1). Heat shock has not been found to be a problem at operating nuclear power plants with this type of cooling system and is not expected to be a problem during the license renewal term.
		Distribution of aquatic organisms (all plants)	Small (Category 1). Thermal discharge may have localized effects but is not expected to affect the larger geographical distribution of aquatic organisms.
		Premature emergence of aquatic insects (all plants)	Small (Category 1). Premature emergence has been found to be a localized effect at some operating nuclear power plants but has not been a problem and is not expected to be a problem during the license renewal term.

Table B-1. (cont.)

GEIS Revision Issue	Findings in the GEIS Revision	Related Issue(s) in Table B-1 of 10 CFR Part 51	Findings in Table B-1 of 10 CFR Part 51
Aquatic Resources (cont.)			
Effects of cooling water discharge on dissolved oxygen, gas supersaturation, and eutrophication	Small impact (Category 1). Gas supersaturation was a concern at a small number of operating nuclear power plants with once-through cooling systems but has been satisfactorily mitigated. Low dissolved oxygen was a concern at one nuclear power plant with a once-through cooling system but has been effectively mitigated. Eutrophication (nutrient loading) and resulting effects on chemical and biological oxygen demands have not been found to be a problem at operating nuclear power plants.	Gas supersaturation (gas bubble disease) (all plants)	Small (Category 1). Gas supersaturation was a concern at a small number of operating nuclear power plants with once-through cooling systems but has been satisfactorily mitigated. It has not been found to be a problem at operating nuclear power plants with cooling towers or cooling ponds and is not expected to be a problem during the license renewal term.
		Low dissolved oxygen in the discharge (all plants)	Small (Category 1). Low dissolved oxygen has been a concern at one nuclear power plant with a once-through cooling system but has been effectively mitigated. It has not been found to be a problem at operating nuclear power plants with cooling towers or cooling ponds and is not expected to be a problem during the license renewal term.

Table B-1. (cont.)

GEIS Revision Issue	Findings in the GEIS Revision	Related Issue(s) in Table B-1 of 10 CFR Part 51	Findings in Table B-1 of 10 CFR Part 51
Aquatic Resources (cont.)			
Effects of cooling water discharge (cont.)		Eutrophication (all plants)	Small (Category 1). Eutrophication has not been found to be a problem at operating nuclear power plants and is not expected to be a problem during the license renewal term.
Effects of nonradiological contaminants on aquatic organisms	Small impact (Category 1). Best management practices and discharge limitations of NPDES permits are expected to minimize the potential for impacts to aquatic resources. Accumulation of metal contaminants has been a concern at a few nuclear power plants but has been satisfactorily mitigated by replacing copper alloy condenser tubes with those made of another metal.	Accumulation of contaminants in sediments or biota (all plants)	Small (Category 1). Accumulation of contaminants has been a concern at a few nuclear power plants but has been satisfactorily mitigated by replacing copper alloy condenser tubes with those of another metal. It is not expected to be a problem during the license renewal term.
Exposure of aquatic organisms to radionuclides	Small impact (Category 1). Doses to aquatic organisms are expected to be well below exposure guidelines developed to protect these aquatic organisms.	Not addressed	Not applicable
Effects of dredging on aquatic resources	Small impact (Category 1). Effects of dredging on aquatic resources tend to be of short duration (years or less) and localized. Dredging requires permits from the U.S. Army Corps of Engineers, State environmental agencies, and other regulatory agencies.	Not addressed	Not applicable

Table B-1. (cont.)

GEIS Revision Issue	Findings in the GEIS Revision	Related Issue(s) in Table B-1 of 10 CFR Part 51	Findings in Table B-1 of 10 CFR Part 51
Aquatic Resources (cont.)			
Water use conflicts with aquatic resources (plants with cooling ponds or cooling towers using makeup water from a river with low flow)	Small or moderate impact (Category 2). Impacts on aquatic resources in instream communities affected by water use conflicts could be of moderate significance in some situations.	Water use conflicts (plants with cooling ponds or cooling towers using makeup water from a river)	Small or moderate (Category 2). The issue has been a concern at nuclear power plants with cooling ponds and at plants with cooling towers. Impacts on instream and riparian communities near these plants could be of moderate significance in some situations.
Refurbishment impacts on aquatic resources	Small impact (Category 1). Refurbishment impacts with appropriate mitigation are not expected to change aquatic communities from their current condition.	Refurbishment (all plants)	Small (Category 1). During plant shutdown and refurbishment there will be negligible effects on aquatic biota because of a reduction of entrainment and impingement of organisms or a reduced release of chemicals.
Impacts of transmission line ROW management on aquatic resources	Small impact (Category 1). Application of best management practices to ROW near aquatic systems would reduce the potential for impacts.	Not addressed	Not applicable
Losses from predation, parasitism, and disease among organisms exposed to sublethal stresses	Small impact (Category 1). These types of losses have not been found to be a problem at operating nuclear power plants and are not expected to be a problem during the license renewal term.	Losses from predation, parasitism, and disease among organisms exposed to sublethal stresses	Small (Category 1). These types of losses have not been found to be a problem at operating nuclear power plants and are not expected to be a problem during the license renewal term.

Table B-1. (cont.)

GEIS Revision Issue	Findings in the GEIS Revision	Related Issue(s) in Table B-1 of 10 CFR Part 51	Findings in Table B-1 of 10 CFR Part 51
Aquatic Resources (cont.)			
Stimulation of nuisance organisms (e.g., shipworms)	Small impact (Category 1). Stimulation of nuisance organisms has been satisfactorily mitigated at the single nuclear power plant with a once-through cooling system where previously it was a problem. It has not been found to be a problem at operating nuclear power plants with cooling towers or cooling ponds and is not expected to be a problem during the license renewal term.	Stimulation of nuisance organisms (e.g., shipworms)	Small (Category 1). Stimulation of nuisance organisms has been satisfactorily mitigated at the single nuclear power plant with a once-through cooling system where previously it was a problem. It has not been found to be a problem at operating nuclear power plants with cooling towers or cooling ponds and is not expected to be a problem during the license renewal term.
Threatened, Endangered, and Protected Species and Essential Fish Habitat			
Threatened, endangered, and protected species and essential fish habitat	Small, moderate, or large impact (Category 2). The magnitude of impacts on threatened, endangered, and protected species and essential fish habitat would depend on the occurrence of listed species and habitats and the effects of power plant systems on them. Consultation with appropriate agencies would be needed to determine whether special status species or habitats are present and whether they would be adversely affected by activities associated with license renewal.	Threatened or endangered species (all plants)	Small, moderate, or large (Category 2). Generally, plant refurbishment and continued operation are not expected to adversely affect threatened or endangered species. However, consultation with appropriate agencies would be needed at the time of license renewal to determine whether threatened or endangered species are present and whether they would be adversely affected.

Table B-1. (cont.)

GEIS Revision Issue	Findings in the GEIS Revision	Related Issue(s) in Table B-1 of 10 CFR Part 51	Findings in Table B-1 of 10 CFR Part 51
Historic and Cultural Resources			
Historic and cultural resources	Small, moderate, or large impact (Category 2). Continued operations and refurbishment associated with the license renewal term are expected to have no more than small impacts on historic and cultural resources located onsite and in the transmission line ROW because most impacts could be mitigated. The National Historic Preservation Act (NHPA) requires the Federal agency to consult with the State Historic Preservation Officer (SHPO) and appropriate Native American Tribes to determine the potential impacts and mitigation. See § 51.14(a).	Historic and cultural resources	Small, moderate, or large (Category 2). Generally, plant refurbishment and continued operation are expected to have no more than small adverse impacts on historic and cultural resources. However, the National Historic Preservation Act requires the Federal agency to consult with the State Historic Preservation Officer to determine whether there are properties present that require protection.
Socioeconomics			
Employment and income, recreation and tourism	Small impact (Category 1). Although most nuclear plants have large numbers of employees with higher than average wages and salaries, employment and income impacts from continued operations and refurbishment are expected to be small. Nuclear plant operations, employee spending, power plant expenditures, and tax payments have an affect on local economies. Changes in plant operations, employment and expenditures would have a greater effect on rural	Public services: tourism and recreation	Small (Category 1). Impacts to tourism and recreation are expected to be of small significance at all sites.

Table B-1. (cont.)

GEIS Revision Issue	Findings in the GEIS Revision	Related Issue(s) in Table B-1 of 10 CFR Part 51	Findings in Table B-1 of 10 CFR Part 51
Socioeconomics (cont.)			
Employment and income, recreation and tourism (cont.)	economies than on semi-urban economies.		
Tax revenues	Small impact (Category 1). Nuclear plants provide tax revenue to local jurisdictions in the form of property tax payments, payments in lieu of tax (PILOT), or tax payments on energy production. The amount of tax revenue paid during the license renewal term from continued operations and refurbishment is not expected to change, since the assessed value of the power plant, payments on energy production, and PILOT payments are also not expected to change.	Considered in the 1996 GEIS, but not identified as an issue	Not applicable

Table B-1. (cont.)

GEIS Revision Issue	Findings in the GEIS Revision	Related Issue(s) in Table B-1 of 10 CFR Part 51	Findings in Table B-1 of 10 CFR Part 51
Socioeconomics (cont.)			
Community services and education	Small impact (Category 1). Changes to local community and educational services from continued operations and refurbishment associated with the license renewal term would be small. With no increase in employment, value of the power plant, payments on energy production, and PILOT payments expected during the license renewal term, community and educational services would not be affected by continued power plant operations. Changes in employment and tax payments would have a greater effect on jurisdictions receiving a large portion of annual revenues from the power plant than on jurisdictions receiving the majority of their revenues from other sources.	Public services: public safety, and social services	Small (Category 1). Impacts on public safety and social services are expected to be of small significance at all sites.
		Public services: public utilities	Small or moderate (Category 2). An increased problem with water shortages at some sites may lead to impacts of moderate significance on public water supply availability.
		Public services, education (license renewal term)	Small (Category 1). Only impacts of small significance are expected.
		Public services, education (refurbishment)	Small, moderate, or large (Category 2). Most sites would experience impacts of small significance but larger impacts are possible depending on site- and project-specific factors.
Population and housing	Small impact (Category 1). Changes to regional population and housing availability and value would be small from continued operations and refurbishment associated with the license renewal term. With no increase in employment expected during the license renewal term,	Housing impacts	Small, moderate, or large (Category 2). Housing impacts are expected to be of small significance at plants located in a medium or high population area and not in an area where growth control measures that limit housing

Table B-1. (cont.)

GEIS Revision Issue	Findings in the GEIS Revision	Related Issue(s) in Table B-1 of 10 CFR Part 51	Findings in Table B-1 of 10 CFR Part 51
Socioeconomics (cont.)			
Population and housing (cont.)	population and housing availability and values would not be affected by continued power plant operations. Changes in housing availability and value would have a greater effect on sparsely populated areas than areas with higher density populations.		development are in effect. Moderate or large housing impacts of the workforce associated with refurbishment may be associated with plants located in sparsely populated areas or in areas with growth control measures that limit housing development.
Transportation	Small impact (Category 1). Changes to traffic volumes would be small from continued operations and refurbishment activities associated with the license renewal term. Changes in employment would have a greater effect on rural areas, with less developed local and regional networks. Impacts would be less noticeable in semi-urban areas depending on the quality and extent of local access roads and the timing of plant shift changes when compared to typical local usage.	Public services, transportation	Small, moderate, or large (Category 2). Transportation impacts are generally expected to be of small significance. However, the increase in traffic associated with the additional workers and the local road and traffic control conditions may lead to impacts of moderate or large significance at some sites.

Table B-1. (cont.)

GEIS Revision Issue	Findings in the GEIS Revision	Related Issue(s) in Table B-1 of 10 CFR Part 51	Findings in Table B-1 of 10 CFR Part 51
Human Health			
Radiation exposures to the public	Small impact (Category 1). Radiation doses to the public from continued operations and refurbishment associated with the license renewal term are expected to continue at current levels, and would be well below regulatory limits.	Radiation exposures to the public during refurbishment	Small (Category 1). During refurbishment, the gaseous effluents would result in doses that are similar to those from current operation. Applicable regulatory dose limits to the public are not expected to be exceeded.
		Radiation exposures to the public (license renewal term)	Small (Category 1). Radiation doses to the public will continue at current levels associated with normal operations.
Radiation exposures to occupational workers	Small impact (Category 1). Occupational doses from continued operations and refurbishment associated with the license renewal term are expected to be within the range of doses experienced during the current license term, and would continue to be well below regulatory limits.	Occupational radiation exposures during refurbishment	Small (Category 1). Occupational doses from refurbishment are expected to be within the range of annual average collective doses experienced for pressurized-water reactors and boiling-water reactors. Occupational mortality risk from all causes, including radiation, is in the mid-range for industrial settings.

Table B-1. (cont.)

GEIS Revision Issue	Findings in the GEIS Revision	Related Issue(s) in Table B-1 of 10 CFR Part 51	Findings in Table B-1 of 10 CFR Part 51
Human Health (cont.)			
Radiation exposures to occupational workers (cont.)		Occupational radiation exposures (license renewal term)	Small (Category 1). Projected maximum occupational doses during the license renewal term are within the range of doses experienced during normal operations and normal maintenance outages, and would be well below regulatory limits.
Human health impact from chemicals	Small impact (Category 1). Chemical hazards to workers would be minimized by observing good industrial hygiene practices. Chemical releases to the environment and the potential for impacts to the public are minimized by adherence to discharge limitations of NPDES permits.	Not addressed	Not applicable
Microbiological hazards to the public (plants with cooling ponds or canals or cooling towers that discharge to a river)	Small, moderate, or large impact (Category 2). These organisms are not expected to be a problem at most operating plants except possibly at plants using cooling ponds, lakes, or canals that discharge to rivers. Impacts would depend on site-specific characteristics.	Microbiological organisms (public health) (plants using lakes or canals, or cooling towers or cooling ponds that discharge to a small river)	Small, moderate, or large (Category 2). These organisms are not expected to be a problem at most operating plants except, possibly, at plants using cooling ponds, lakes, or canals that discharge to small rivers. Without site-specific data, it is not possible to predict the effects generically.

Table B-1. (cont.)

GEIS Revision Issue	Findings in the GEIS Revision	Related Issue(s) in Table B-1 of 10 CFR Part 51	Findings in Table B-1 of 10 CFR Part 51
Human Health (cont.)			
Microbiological hazards to plant workers	Small impact (Category 1). Occupational health impacts are expected to be controlled by continued application of accepted industrial hygiene practices to minimize worker exposures.	Microbiological organisms (occupational health)	Small (Category 1). Occupational health impacts are expected to be controlled by continued application of accepted industrial hygiene practices to minimize worker exposures.
Chronic effects of EMFs	Uncertain impact. Studies of 60-Hz EMFs have not uncovered consistent evidence linking harmful effects with field exposures. EMFs are unlike other agents that have a toxic effect (e.g., toxic chemicals and ionizing radiation) in that dramatic acute effects cannot be forced and longer-term effects, if real, are subtle. Because the state of the science is currently inadequate, no generic conclusion on human health impacts is possible.	EMFs, chronic effects	Uncertain. Biological and physical studies of 60-Hz electromagnetic fields have not found consistent evidence linking harmful effects with field exposures. However, because the state of the science is currently inadequate, no generic conclusion on human health impacts is possible.
Physical occupational hazards	Small impact (Category 1). Occupational safety and health hazards are generic to all types of electrical generating stations, including nuclear power plants, and are of small significance if the workers adhere to safety standards and use protective equipment.	Not addressed	Not applicable

Table B-1. (cont.)

GEIS Revision Issue	Findings in the GEIS Revision	Related Issue(s) in Table B-1 of 10 CFR Part 51	Findings in Table B-1 of 10 CFR Part 51
Human Health (cont.)			
Electric shock hazards	Small, moderate, or large impact (Category 2). Electrical shock potential is of small significance for transmission lines that are operated in adherence with the National Electrical Safety Code (NESC). Without a review of each nuclear plant transmission line conformance with NESC criteria, it is not possible to determine the significance of the electrical shock potential.	EMFs, acute effects (electric shock)	Small, moderate, or large (Category 2). Electrical shock resulting from direct access to energized conductors or from induced charges in metallic structures have not been found to be a problem at most operating plants and generally are not expected to be a problem during the license renewal term. However, site-specific review is required to determine the significance of the electric shock potential at the site.
Postulated Accidents			
Design-basis accidents	Small impact (Category 1). The NRC staff has concluded that the environmental impacts of design-basis accidents are of small significance for all plants.	Design basis accidents	Small (Category 1). The NRC staff has concluded that the environmental impacts of design basis accidents are of small significance for all plants.

Table B-1. (cont.)

GEIS Revision Issue	Findings in the GEIS Revision	Related Issue(s) in Table B-1 of 10 CFR Part 51	Findings in Table B-1 of 10 CFR Part 51
Postulated Accidents (cont.)			
Severe accidents	Small impact (Category 2). The probability-weighted consequences of atmospheric releases, fallout onto open bodies of water, releases to groundwater, and societal and economic impacts from severe accidents are small for all plants. However, alternatives to mitigate severe accidents must be considered for all plants that have not considered such alternatives.	Severe accidents	Small (Category 2). The probability-weighted consequences of atmospheric releases, fallout onto open bodies of water, releases to groundwater, and societal and economic impacts from severe accidents are small for all plants. However, alternatives to mitigate severe accidents must be considered for all plants that have not considered such alternatives.
Environmental Justice			
Minority and low-income populations	Small or moderate impact (Category 2). Impacts to minority and low-income populations and subsistence consumption will be addressed in plant-specific reviews. See NRC Policy Statement on the Treatment of Environmental Justice Matters in NRC Regulatory and Licensing Actions (69 FR 52040).	Environmental justice	None. The need for and the content of an analysis of environmental justice will be addressed in plant-specific reviews.

Table B-1. (cont.)

GEIS Revision Issue	Findings in the GEIS Revision	Related Issue(s) in Table B-1 of 10 CFR Part 51	Findings in Table B-1 of 10 CFR Part 51
Solid Waste Management			
Low-level waste storage and disposal	Small impact (Category 1). The comprehensive regulatory controls that are in place and the low public doses being achieved at reactors ensure that the radiological impacts to the environment would remain small during the license renewal term.	Low-level waste storage and disposal	Small (Category 1). The comprehensive regulatory controls that are in place and the low public doses being achieved at reactors ensure that the radiological impacts to the environment will remain small during the term of a renewed license. The maximum additional onsite land that may be required for low-level waste storage during the term of a renewed license and associated impacts will be small. Nonradiological impacts on air and water will be negligible. The radiological and nonradiological environmental impacts of long-term disposal of low-level waste from any individual plant at licensed sites are small. In addition, the Commission concludes that there is reasonable assurance that sufficient low-level waste disposal capacity will be made available when needed for facilities to be decommissioned consistent with NRC decommissioning requirements.

Table B-1. (cont.)

GEIS Revision Issue	Findings in the GEIS Revision	Related Issue(s) in Table B-1 of 10 CFR Part 51	Findings in Table B-1 of 10 CFR Part 51
Solid Waste Management (cont.)			
Onsite storage of spent nuclear fuel	Small impact (Category 1). The expected increase in the volume of spent fuel from an additional 20 years of operation can be safely accommodated onsite with small environmental effects through dry or pool storage at all plants, if a permanent repository or monitored retrievable storage is not available.	Onsite spent fuel	Small (Category 1). The expected increase in the volume of spent fuel from an additional 20 years of operation can be safely accommodated onsite with small environmental effects through dry or pool storage at all plants if a permanent repository or monitored retrievable storage is not available.
Offsite radiological impacts of spent nuclear fuel and high-level waste disposal	(Category 1). For the high-level waste and spent fuel disposal component of the fuel cycle, the EPA established a dose limit of 15 millirem (0.15 mSv) per year for the first 10,000 years and 100 millirem (1.0 mSv) per year between 10,000 years and 1 million years for offsite releases of radionuclides at the proposed repository at Yucca Mountain, Nevada. The Commission concludes that the impacts would not be sufficiently large to require the NEPA conclusion, for any plant, that the option of extended operation under 10 CFR Part 54 should be eliminated. Accordingly, while the Commission has not assigned a	Offsite radiological impacts (spent fuel and high-level waste disposal)	The NRC did not assign a single level of significance for the impacts of spent fuel and high-level waste disposal, but considered the issue Category 1.[(a)]

Table B-1. (cont.)

GEIS Revision Issue	Findings in the GEIS Revision	Related Issue(s) in Table B-1 of 10 CFR Part 51	Findings in Table B-1 of 10 CFR Part 51
Waste Management (cont.)			
Offsite radiological impacts (cont.)	single level of significance for the impacts of spent fuel and high-level waste disposal, this issue is considered Category 1.		
Mixed waste storage and disposal	Small impact (Category 1). The comprehensive regulatory controls and the facilities and procedures that are in place ensure proper handling and storage, as well as negligible doses and exposure to toxic materials for the public and the environment at all plants. License renewal would not increase the small, continuing risk to human health and the environment posed by mixed waste at all plants. The radiological and nonradiological environmental impacts of long-term disposal of mixed waste from any individual plant at licensed sites are small.	Mixed waste storage and disposal	Small (Category 1). The comprehensive regulatory controls and the facilities and procedures that are in place ensure proper handling and storage, as well as negligible doses and exposure to toxic materials for the public and the environment at all plants. License renewal will not increase the small, continuing risk to human health and the environment posed by mixed waste at all plants. The radiological and nonradiological environmental impacts of long-term disposal of mixed waste from any individual plant at licensed sites are small. In addition, the Commission concludes that there is reasonable assurance that sufficient mixed waste disposal capacity will be made available when needed for facilities to be decommissioned consistent with NRC decommissioning requirements.

Table B-1. (cont.)

GEIS Revision Issue	Findings in the GEIS Revision	Related Issue(s) in Table B-1 of 10 CFR Part 51	Findings in Table B-1 of 10 CFR Part 51
Waste Management (cont.)			
Nonradioactive waste storage and disposal	Small impact (Category 1). No changes to systems that generate nonradioactive waste are anticipated during the license renewal term. Facilities and procedures are in place to ensure continued proper handling, storage, and disposal, as well as negligible exposure to toxic materials for the public and the environment at all plants.	Nonradiological waste	Small (Category 1). No changes to generating systems are anticipated for license renewal. Facilities and procedures are in place to ensure continued proper handling and disposal at all plants.
Cumulative Impacts			
Cumulative impacts	(Category 2). Cumulative impacts of license renewal must be considered on a plant-specific basis. Impacts would depend on regional resource characteristics, the resource-specific impacts of license renewal, and the cumulative significance of other factors affecting the resource.	Not addressed	Not applicable
Uranium Fuel Cycle			
Offsite radiological impacts – individual impacts from other than the disposal of spent fuel and high-level waste	Small impact (Category 1). The impacts to the public from radiological exposures have been considered by the Commission in Table S-3 of this part. Based on information in the GEIS, impacts to individuals from radioactive gaseous and liquid releases, including radon-222 and technetium-99, would remain at or below the NRC's regulatory limits.	Offsite radiological impacts (individual effects from other than the disposal of spent fuel and high-level waste	Small (Category 1). Offsite impacts of the uranium fuel cycle have been considered by the Commission in Table S-3 of this part. Based on information in the GEIS, impacts on individuals from radioactive gaseous and liquid releases, including radon-222 and technetium-99, are small.

Table B-1. (cont.)

GEIS Revision Issue	Findings in the GEIS Revision	Related Issue(s) in Table B-1 of 10 CFR Part 51	Findings in Table B-1 of 10 CFR Part 51
Uranium Fuel Cycle (cont.)			
Offsite radiological impacts – collective impacts from other than the disposal of spent fuel and high-level waste	(Category 1). There are no regulatory limits applicable to collective doses to the general public from fuel-cycle facilities. The practice of estimating health effects on the basis of collective doses may not be meaningful. All fuel-cycle facilities are designed and operated to meet the applicable regulatory limits and standards. The Commission concludes that the collective impacts are acceptable. The Commission concludes that the impacts would not be sufficiently large to require the NEPA conclusion, for any plant, that the option of extended operation under 10 CFR Part 54 should be eliminated. Accordingly, while the Commission has not assigned a single level of significance for the collective impacts of the uranium fuel cycle, this issue is considered Category 1.	Offsite radiological impacts (collective effects)	The NRC did not assign a single level of significance for the collective effects of the fuel cycle, but considered the issue Category 1.[(b)]
Nonradiological impacts of the uranium fuel cycle	Small impact (Category 1). The nonradiological impacts of the uranium fuel cycle resulting from the renewal of an operating license for any plant would be small.	Nonradiological impacts of the uranium fuel cycle	Small (Category 1). The nonradiological impacts of the uranium fuel cycle resulting from the renewal of an operating license for any plant are found to be small.

Table B-1. (cont.)

GEIS Revision Issue	Findings in the GEIS Revision	Related Issue(s) in Table B-1 of 10 CFR Part 51	Findings in Table B-1 of 10 CFR Part 51
Uranium Fuel Cycle (cont.)			
Transportation	Small impact (Category 1). The impacts of transporting materials to and from uranium-fuel-cycle facilities on workers, the public, and the environment are expected to be small.	Transportation	Small (Category 1). The impacts of transporting spent fuel enriched up to 5 percent uranium-235, with average burnup for the peak rod, to current levels approved by NRC (up to 62,000 MWd/MTU), and the cumulative impacts of transporting high-level waste to a single repository, such as Yucca Mountain, Nevada, are found to be consistent with the impact values contained in 10 CFR 51.52(c), Summary Table S–4—Environmental Impact of Transportation of Fuel and Waste to and from One Light-Water-Cooled Nuclear Power Reactor. If fuel enrichment or burnup conditions are not met, the applicant must submit an assessment of the implications for the environmental impact values reported in § 51.52.

Table B-1. (cont.)

GEIS Revision Issue	Findings in the GEIS Revision	Related Issue(s) in Table B-1 of 10 CFR Part 51	Findings in Table B-1 of 10 CFR Part 51
Termination of Nuclear Power Plant Operations and Decommissioning			
Termination of plant operations and decommissioning	Small impact (Category 1). License renewal is expected to have a negligible effect on the impacts of terminating operations and decommissioning on all resources.	Air quality	Small (Category 1). Air quality impacts of decommissioning are expected to be negligible either at the end of the current operating term or at the end of the license renewal term.
		Water quality	Small (Category 1). The potential for significant water quality impacts from erosion or spills is no greater whether decommissioning occurs after a 20-year license renewal period or after the original 40-year operation period, and measures are readily available to avoid such impacts.
		Ecological resources	Small (Category 1). Decommissioning after either the initial operating period or after a 20-year license renewal period is not expected to have any direct ecological impacts.

Table B-1. (cont.)

GEIS Revision Issue	Findings in the GEIS Revision	Related Issue(s) in Table B-1 of 10 CFR Part 51	Findings in Table B-1 of 10 CFR Part 51
Termination of Nuclear Power Plant Operations and Decommissioning (cont.)			
Termination of plant operations and decommissioning (cont.)		Socioeconomic impacts	Small (Category 1). Decommissioning would have some short-term socioeconomic impacts. The impacts would not be increased by delaying decommissioning until the end of a 20-year relicense period, but they might be decreased by population and economic growth.
		Radiation doses	Small (Category 1). Doses to the public will be well below applicable regulatory standards regardless of which decommissioning method is used. Occupational doses would increase no more than 1 man-rem caused by buildup of long-lived radionuclides during the license renewal term.

Table B-1. (cont.)

GEIS Revision Issue	Findings in the GEIS Revision	Related Issue(s) in Table B-1 of 10 CFR Part 51	Findings in Table B-1 of 10 CFR Part 51
Termination of Nuclear Power Plant Operations and Decommissioning (cont.)			
Termination of plant operations and decommissioning (cont.)		Waste management	Small (Category 1). Decommissioning at the end of a 20-year license renewal period would generate no more solid wastes than at the end of the current license term. No increase in the quantities of Class C or greater than Class C wastes would be expected.

(a) For the high-level waste and spent fuel disposal component of the fuel cycle, there are no current regulatory limits for offsite releases of radionuclides for the current candidate repository site. However, if we assume that limits are developed along the lines of the 1995 National Academy of Sciences (NAS) report, *Technical Bases for Yucca Mountain Standards*, and that in accordance with the Commission's Waste Confidence Decision, 10 CFR 51.23, a repository can and likely will be developed at some site that will comply with such limits, peak doses to virtually all individuals will be 100 millirem per year or less. However, while the Commission has reasonable confidence that these assumptions will prove correct, there is considerable uncertainty since the limits are yet to be developed, no repository application has been completed or reviewed, and uncertainty is inherent in the models used to evaluate possible pathways to the human environment. The NAS report indicated that 100 millirem per year should be considered as a starting point for limits for individual doses, but notes that some measure of consensus exists among national and international bodies that the limits should be a fraction of the 100 millirem per year. The lifetime individual risk from 100 millirem annual dose limit is about 3×10^{-3}.

Estimating cumulative doses to populations over thousands of years is more problematic. The likelihood and consequences of events that could seriously compromise the integrity of a deep geologic repository were evaluated by the Department of Energy in the *Final Environmental Impact Statement: Management of Commercially Generated Radioactive Waste*, October 1980. The evaluation estimated the 70-year whole-body dose commitment to the maximally exposed individual (MEI) and to the regional population resulting from several modes of breaching a reference repository in the year of closure, after 1,000 years, after 100,000 years, and after 100,000,000 years. Subsequently, the NRC and other federal agencies have expended considerable effort to develop models for the design and for the licensing of a high-level waste repository, especially for the candidate repository at Yucca Mountain. More meaningful estimates of doses to the population may be possible in the future as more is understood about the performance of the proposed Yucca Mountain repository. Such estimates would involve very great uncertainty, especially with respect to cumulative population doses over thousands of years. The standard

Footnotes continued on next page.

Table B-1. (cont.)

Footnotes (cont.)

proposed by the NAS is a limit on maximum individual dose. The relationship of potential new regulatory requirements, based on the NAS report, and cumulative population impacts have not been determined, although the report articulates the view that protection of individuals will adequately protect the population for a repository at Yucca Mountain. However, the EPA's generic repository standards in 40 CFR Part 191 generally provide an indication of the order of magnitude of cumulative risk to population that could result from the licensing of a Yucca Mountain repository, assuming the ultimate standards will be within the range of standards now under consideration. The standards in 40 CFR Part 191 protect the population by imposing limitations on the amount of radioactive material released over 10,000 years. The cumulative release limits are based on EPA's population impact goal of 1,000 premature cancer deaths worldwide for a 100,000 metric tonne (MTHM) repository.

Nevertheless, despite all the uncertainty, some judgement as to the regulatory NEPA implications of these matters should be made, and it makes no sense to repeat the same judgement in every case. Even taking the uncertainties into account, the Commission concludes that these impacts are acceptable in that these impacts would not be sufficiently large to require the NEPA conclusion, for any plant, that the option of extended operation under 10 CFR Part 54 should be eliminated. Accordingly, while the Commission has not assigned a single level of significance for the impacts of spent fuel and high-level waste disposal, this issue is considered in Category 1.

(b) The 100-year environmental dose commitment to the U.S. population from the fuel cycle, high-level waste and spent fuel disposal excepted, is calculated to be about 14,800 person rem, or 12 cancer fatalities, for each additional 20-year power reactor operating term. Much of this, especially the contribution of radon releases from mines and tailing piles, consists of tiny doses summed over large populations. This same dose calculation can theoretically be extended to include many tiny doses over additional thousands of years as well as doses outside the United States. The result of such a calculation would be thousands of cancer fatalities from the fuel cycle, but this result assumes that even tiny doses have some statistical adverse health effect that will never be mitigated (e.g., no cancer cure in the next thousand years), and that these doses projected over thousands of years are meaningful. However, these assumptions are questionable. In particular, science cannot rule out the possibility that there will be no cancer fatalities from these tiny doses. For perspective, the doses are very small fractions of regulatory limits, and even smaller fractions of natural background exposure to the same populations.

Nevertheless, despite all the uncertainty, some judgement as to the regulatory NEPA implications of these matters should be made, and it makes no sense to repeat the same judgement in every case. Even taking the uncertainties into account, the Commission concludes that these impacts are acceptable in that these impacts would not be sufficiently large to require the NEPA conclusion, for any plant, that the option of extended operation under 10 CFR Part 54 should be eliminated. Accordingly, while the Commission has not assigned a single level of significance for the collective effects of the fuel cycle, this issue is considered Category 1.

Appendix C

General Characteristics and Environmental Settings of Domestic Nuclear Power Plants

Appendix C

General Characteristics and Environmental Settings of Domestic Nuclear Power Plants General

This appendix contains brief descriptions of each commercial nuclear power plant site in the United States. The material is intended to serve as an overview of the important characteristics of each plant and its environmental setting. The information was taken from the 1996 GEIS and updated with information available from recently published supplemental environmental impacts statements (SEISs), environmental assessments, CEC (2006), EIA (2007), USCB (2007), EPA (2007), USFWS (2007), and USGS (2003).

ARKANSAS NUCLEAR ONE

Location: Pope County, Arkansas
10 km (6 mi) WNW of Russellville
Latitude 35.3100°N; longitude 93.2308°W
Licensee: Entergy Arkansas, Inc.

Unit Information	Unit 1	Unit 2
Docket Number:	50-313	50-368
Construction Permit:	1968	1972
Operating License:	1974	1978
Commercial Operation:	1974	1980
License Expiration:	2034	2038
Licensed Thermal Power [MW(t)]:	2568	3026
Net Capacity [MW(e)]:	836	988
Type of Reactor:	PWR	PWR
Nuclear Steam Supply System Vendor:	B&E	CE

Cooling Water System

Type: Unit 1: Once-through; Unit 2: Natural draft cooling tower
Source: Dardanelle Reservoir
Source Temperature Range: 4–28°C (40–83°F)
Condenser Flow Rate: 48.1 m^3/s (762,400 gpm) for Unit 1
26.6 m^3/s (422,000 gpm) for Unit 2
Design Condenser Temperature Rise: 8.3°C (15°F) for Unit 1
17.1°C (30.7°F) for Unit 2
Intake Structure: 1340-m (4400-ft) canal
Discharge Structure: 158-m (520-ft) canal

Site Information

Total Area: 471 ha (1164 ac)
Exclusion Distance: 1 km (0.7 mi) radius
Low Population Zone: 6.44 km (4 mi) radius
Nearest City: Little Rock; 2000 population: 183,133
Site Topography: Flat
Surrounding Area Topography: Hilly to mountainous
Dominant Land Cover Within 8 km (5 mi): Forest, agriculture, open water
Level 1 Ecoregion Within 8 km (5 mi): Eastern Temperate Forest

Level 3 Ecoregion Within 8 km (5 mi): Arkansas Valley
Percent Wetland Within 8 km (5 mi): 11.7, mostly lake
Nearby Features: The nearest town is London 3 km (2 mi) NW. The size of Lake Dardenelle is 15,000 ha (37,000 ac). The reservoir is part of the Arkansas River. The Missouri Pacific Railroad and U.S. Highway I-40 are just north of the site.
Population Within an 80-km (50-mi) Radius: 267,664

BEAVER VALLEY POWER STATION

Location: Beaver County, Pennsylvania
40 km (25 mi) NW of Pittsburgh
Latitude 40.6219°N; longitude 80.4339°W
Licensee: FirstEnergy Nuclear Operating Company

Unit Information	Unit 1	Unit 2
Docket Number:	50-334	50-412
Construction Permit:	1970	1974
Operating License:	1976	1987
Commercial Operation:	1976	1987
License Expiration:	2016	2027
Licensed Thermal Power [MW(t)]:	2900	2900
Net Capacity [MW(e)]:	849	832
Type of Reactor:	PWR	PWR
Nuclear Steam Supply System Vendor:	WEST	WEST

Cooling Water System

Type: Natural draft cooling towers
Source: Ohio River
Source Temperature Range: 2.5–26.4°C (36.5–79.5°F)
Condenser Flow Rate: 30.31 m^3/s (480,400 gpm) each unit
Design Condenser Temperature Rise: 14°C (26°F)
Intake Structure: Concrete structure at river edge
Discharge Structure: At river edge

Site Information

Total Area: 183 ha (453 ac)
Exclusion Distance: 0.61 km (0.38 mi)
Low Population Zone: 5.79 km (3.60 mi)
Nearest City: Pittsburgh; 2000 population: 334,563
Site Topography: Flat
Surrounding Area Topography: Hilly
Dominant Land Cover Within 8 km (5 mi): Forest, agriculture, developed: open space
Level 1 Ecoregion Within 8 km (5 mi): Eastern Temperate Forest
Level 3 Ecoregion Within 8 km (5 mi): Western Allegheny Plateau
Percent Wetland Within 8 km (5 mi): 5.5, mostly riverine

Nearby Features: The nearest town is Midland 1.6 km (1 mi) NW. A large industrial area is about 1.6 km (1 mi) WNW. The Penn Central Railroad State Parks are within 16 km (10 mi).

Population Within an 80 km (50 mi) Radius: 3,274,451

BRAIDWOOD STATION

Location: Will County, Illinois
39 km (24 mi) SSW of Joliet
Latitude 41.2436°N; longitude 88.2297°W
Licensee: Commonwealth Edison Company

Unit Information	Unit 1	Unit 2
Docket Number:	50-456	50-457
Construction Permit:	1975	1975
Operating License:	1987	1988
Commercial Operation:	1988	1988
License Expiration:	2027	2028
Licensed Thermal Power [MW(t)]:	3587	3587
Net Capacity [MW(e)]:	1178	1152
Type of Reactor:	PWR	PWR
Nuclear Steam Supply System Vendor:	WEST	WEST

Cooling Water System

Type: Closed-cycle cooling pond
Source: Kankakee River
Source Temperature Range: 0–31°C (32–87°F)
Condenser Flow Rate: 46.05 m^3/s (729,800 gpm)
Design Condenser Temperature Rise: 12°C (21°F)
Intake Structure: Concrete structure at lake shore
Discharge Structure: Surface discharge flume to lake

Site Information

Total Area: 1804 ha (4457 ac)
Exclusion Distance: 0.48 km (0.3 mi) minimum
Low Population Zone: 1.810 km (1.125 mi) radius
Nearest City: Joliet; 2000 population: 106,221
Site Topography: Flat to rolling
Surrounding Area Topography: Flat to rolling
Dominant Land Cover Within 8 km (5 mi): Agriculture, forest, developed: high, medium, low density
Level 1 Ecoregion Within 8 km (5 mi): Eastern Temperate Forest
Level 3 Ecoregion Within 8 km (5 mi): Central Corn Belt Plains

Percent Wetland Within 8 km (5 mi): 11.4, mostly lake

Nearby Features: The nearest town is Godley 0.8 km (0.5 mi) SW. There are 4 state parks within 16 km (10 mi). Midewin National Tallgrass Prairie and Abraham Lincoln National Cemetery are about 13 km (8 mi) NE. Dresden Nuclear Power Station is about 16 km (10 mi) N and LaSalle County Station (nuclear) is about 32 km (20 mi) WSW. The Illinois Central Gulf Railroad is just NW. U.S. Highway I-55 is about 3 km (2 mi) NW.

Population Within an 80 km (50 mi) Radius: 4,272,003

BROWNS FERRY NUCLEAR PLANT

Location: Limestone County, Alabama
16 km (10 mi) NW of Decatur
Latitude 34.7042°N; longitude 87.1186°W
Licensee: Tennessee Valley Authority

Unit Information	Unit 1	Unit 2	Unit 3
Docket Number:	50-259	50-260	50-296
Construction Permit:	1967	1967	1968
Operating License:	1973	1974	1976
Commercial Operation:	1974	1975	1977
License Expiration:	2033	2034	2036
Licensed Thermal Power [MW(t)]:	3458	3458	3458
Net Capacity [MW(e)]:	1065	1118	1114
Type of Reactor:	BWR	BWR	BWR
Nuclear Steam Supply System Vendor:	GE	GE	GE

Cooling Water System

Type: Once-through with helper towers
Source: Tennessee River
Source Temperature Range: 4–32°C (40–90°F)
Condenser Flow Rate: 139 m^3/s (734,000 gpm); for all three units
Design Condenser Temperature Rise: 15.9°C (28.7°F)
Intake Structure: Concrete structure in small inlet
Discharge Structure: Diffuser pipes

Site Information

Total Area: 340 ha (840 ac)
Exclusion Distance: 1.22 km (.76 mi) radius
Low Population Zone: 11.3 km (7 mi)
Nearest City: Huntsville; 2000 population: 158,216
Site Topography: Flat
Surrounding Area Topography: Flat to rolling
Dominant Land Cover Within 8 km (5 mi): Agriculture, open water, forest
Level 1 Ecoregion Within 8 km (5 mi): Eastern Temperate Forest
Level 3 Ecoregion Within 8 km (5 mi): Interior Plateau

Percent Wetland Within 8 km (5 mi): 42.2, mostly lake (some freshwater forested/shrub wetland)

Nearby Features: The nearest town is Lawngate 1.6 km (1 mi) NE. The Redstone Arsenal is 40 km (25 mi) E. The Southern Railroad is 10 km (6 mi) S and the Louisville and Nashville Railroad is 10 km (6 mi) E. Two wildlife management areas are located within 5 km (3 mi) of the plant.

Population Within an 80 km (50 mi) Radius: 872,478

BRUNSWICK STEAM ELECTRIC PLANT

Location: Brunswick County, North Carolina
26 km (16 mi) S of Wilmington
Latitude 33.9583°N; longitude 78.0106°W
Licensee: Progress Energy

Unit Information	Unit 1	Unit 2
Docket Number:	50-325	50-324
Construction Permit:	1967	1968
Operating License:	1976	1974
Commercial Operation:	1977	1975
License Expiration:	2036	2034
Licensed Thermal Power [MW(t)]:	2923	2923
Net Capacity [MW(e)]:	938	937
Type of Reactor:	BWR	BWR
Nuclear Steam Supply System Vendor:	GE	GE

Cooling Water System

Type: Once-through
Source: Cape Fear River
Source Temperature Range: 4–30°C (40–86°F)
Condenser Flow Rate: 42.6 m^3/s (675,000 gpm)
Design Condenser Temperature Rise: 9°C (17°F)
Intake Structure: 5 km (3 mi) canal from Cape Fear River
Discharge Structure: 10 km (6 mi) canal to Atlantic Ocean

Site Information

Total Area: 490 ha (1200 ac)
Exclusion Distance: 0.92 km (0.57 mi)
Low Population Zone: 3.22 km (2 mi)
Nearest City: Wilmington; 2000 population: 75,838
Site Topography: Flat
Surrounding Area Topography: Flat
Dominant Land Cover Within 8 km (5 mi): Wetland, open water, forest
Level 1 Ecoregion Within 8 km (5 mi): Eastern Temperate Forest
Level 3 Ecoregion Within 8 km (5 mi): Middle Atlantic Coastal Plain

Percent Wetland Within 8 km (5 mi): 60.5, mostly estuarine and marine deepwater; freshwater forested/shrub wetland; estuarine and marine wetland

Nearby Features: The nearest town is Southport 5 km (3 mi) S. Sunny Point Military Ocean Terminal is about 8 km (5 mi) N.

Population Within an 80 km (50 mi) Radius: 361,872

BYRON STATION

Location: Ogle County, Illinois
27 km (17 mi) SW of Rockford
Latitude 42.0750°N; longitude 89.2811°W
Licensee: Exelon Corporation

Unit Information	Unit 1	Unit 2
Docket Number:	50-454	50-455
Construction Permit:	1975	1975
Operating License:	1985	1987
Commercial Operation:	1985	1987
License Expiration:	2025	2027
Licensed Thermal Power [MW(t)]:	3587	3587
Net Capacity [MW(e)]:	1164	1136
Type of Reactor:	PWR	PWR
Nuclear Steam Supply System Vendor:	WEST	WEST

Cooling Water System

Type: Natural draft towers
Source: Rock River
Source Temperature Range: Not available
Condenser Flow Rate: 39.9 m^3/s (632,000 gpm)
Design Condenser Temperature Rise: 13°C (24°F)
Intake Structure: Concrete structure on river bank
Discharge Structure: Discharged to river

Site Information

Total Area: 565.8 ha (1398 ac)
Exclusion Distance: 0.42 km (0.26 mi)
Low Population Zone: 4.83 km (3 mi)
Nearest City: Rockford; 2000 population: 150,115
Site Topography: Rolling
Surrounding Area Topography: Rolling
Dominant Land Cover Within 8 km (5 mi): Agriculture, forest, developed: open space
Level 1 Ecoregion Within 8 km (5 mi): Eastern Temperate Forest
Level 3 Ecoregion Within 8 km (5 mi): Central Corn Belt Plains
Percent Wetland Within 8 km (5 mi): 3.6, mostly lake

Nearby Features: The nearest town is Byron about 5 km (3 mi) NNE. The Chicago Milwaukee and the St. Paul and Pacific Railroads are about 6 km (4 mi) NNE. White Pines State Park is about 18 km (11 mi) WSW.

Population Within an 80 km (50 mi) Radius: 1,300,282

CALLAWAY PLANT

Location: Callaway County, Missouri
16 km (10 mi) SE of Fulton
Latitude 38.7622°N; longitude 91.7817°W
Licensee: Ameren Corporation

Unit Information	Unit 1
Docket Number:	50-483
Construction Permit:	1976
Operating License:	1984
Commercial Operation:	1984
License Expiration:	2024
Licensed Thermal Power [MW(t)]:	3565
Net Capacity [MW(e)]:	1190
Type of Reactor:	PWR
Nuclear Steam Supply System Vendor:	WEST

Cooling Water System

Type: Natural draft cooling tower
Source: Missouri River
Source Temperature Range: Not available
Condenser Flow Rate: 33 m^3/s (530,000 gpm)
Design Condenser Temperature Rise: 17°C (30°F)
Intake Structure: Intake from river
Discharge Structure: Discharged to river

Site Information

Total Area: 2115.8 ha (5228 ac)
Exclusion Distance: 1.21 km (0.75 mi) radius
Low Population Zone: 4.02 ha (2.50 mi)
Nearest City: Columbia; 2000 population: 84,531
Site Topography: Flat, on a small plateau
Surrounding Area Topography: Rolling to hilly
Dominant Land Cover Within 8 km (5 mi): Forest, agriculture, developed: open space
Level 1 Ecoregion Within 8 km (5 mi): Eastern Temperate Forest
Level 3 Ecoregion Within 8 km (5 mi): Interior River Valley and Hills
Percent Wetland Within 8 km (5 mi): 4.5, mostly freshwater forested/shrub wetland; riverine

Nearby Features: The nearest town is Portland 8 km (5 mi) SE. The Missouri, Kansas, and Texas Railroad is about 5 km (3 mi) S and the Missouri Pacific Railroad is about 10 km (6 mi) S. U.S. Highway I-70 is about 16 km (10 mi) N.

Population Within an 80 km (50 mi) Radius: 491,072

CALVERT CLIFFS NUCLEAR POWER PLANT

Location: Calvert County, Maryland
56 km (35 mi) S of Annapolis
Latitude 38.4347°N; longitude 76.4419°W
Licensee: Baltimore Gas and Electric Co.

Unit Information	Unit 1	Unit 2
Docket Number:	50-317	50-318
Construction Permit:	1969	1969
Operating License:	1974	1976
Commercial Operation:	1975	1977
License Expiration:	2034	2036
Licensed Thermal Power [MW(t)]:	2700	2700
Net Capacity [MW(e)]:	873	862
Type of Reactor:	PWR	PWR
Nuclear Steam Supply System Vendor:	CE	CE

Cooling Water System

Type: Once-through
Source: Chesapeake Bay
Source Temperature Range: 1–31°C (34–87°F)
Condenser Flow Rate: 76 m^3/s (1,200,000 gpm) each unit
Design Condenser Temperature Rise: 6.7°C (12°F).
Intake Structure: 4500 ft (1372 m) from shore
Discharge Structure: 260 m (850 ft) from shore

Site Information

Total Area: 853 ha (2108 ac)
Exclusion Distance: 1.08 km (0.67 mi) radius
Low Population Zone:
Nearest City: Washington, D.C.; 2000 population: 572,059
Site Topography: Rolling
Surrounding Area Topography: Rolling
Dominant Land Cover Within 8 km (5 mi): Open water, forest, agriculture
Level 1 Ecoregion Within 8 km (5 mi): Eastern Temperate Forest
Level 3 Ecoregion Within 8 km (5 mi): Southeastern Plains; Middle Atlantic Coastal Plain
Percent Wetland Within 8 km (5 mi): 66, mostly estuarine and marine deepwater

Nearby Features: The nearest town is Long Beach 1.6 km (1 mi) NNW. Calvert Cliffs State Park is about 6 km (4 mi) SSE. A naval ordinance facility is 11 km (7 mi) SSW.

Population Within an 80 km (50 mi) Radius: 3,919,397

CATAWBA NUCLEAR STATION

Location: York County, South Carolina
10 km (6 mi) NNW of Rock Hill
Latitude 35.0514°N; longitude 81.0708°W
Licensee: Duke Energy Corporation

Unit Information	Unit 1	Unit 2
Docket Number:	50-413	50-414
Construction Permit:	1975	1975
Operating License:	1985	1986
Commercial Operation:	1985	1986
License Expiration:	2045	2046
Licensed Thermal Power [MW(t)]:	3411	3411
Net Capacity [MW(e)]:	1129	1129
Type of Reactor:	PWR	PWR
Nuclear Steam Supply System Vendor:	WEST	WEST

Cooling Water System

Type: Mechanical draft towers
Source: Lake Wylie
Source Temperature Range: 6–28°C (43–83°F)
Condenser Flow Rate: 42 m^3/s (660,000 gpm) each unit
Design Condenser Temperature Rise: 13°C (24°F)
Intake Structure: Skimmer wall on cove of the lake
Discharge Structure: On another cove of the lake

Site Information

Total Area: 158 ha (391 ac)
Exclusion Distance: 2500 ft (0.76 km; 0.47 mi) radius
Low Population Zone: 6.12 km (3.8 mi) radius
Nearest City: Charlotte, North Carolina; 2000 population: 540,828
Site Topography: Rolling
Surrounding Area Topography: Rolling
Dominant Land Cover Within 8 km (5 mi): Forest, agriculture, developed: open space
Level 1 Ecoregion Within 8 km (5 mi): Eastern Temperate Forest
Level 3 Ecoregion Within 8 km (5 mi): Piedmont
Percent Wetland Within 8 km (5 mi): 12.9, mostly lake

Nearby Features: The nearest town is Rock Hill 10 km (6 mi) SSE. U.S. Highway I-77 is about 10 km (6 mi) E and I-85 is about 27 km (17 mi) N. The Southern Railway is 8 km (5 mi) S.

Population Within an 80 km (50 mi) Radius: 2,041,465

CLINTON POWER STATION

Location: DeWitt County, Illinois
10 km (6 mi) E of Clinton
Latitude 40.1731°N; longitude 88.8342°W
Licensee: AmerGen Energy Co.

Unit Information	Unit 1
Docket Number:	50-461
Construction Permit:	1976
Operating License:	1987
Commercial Operation:	1987
License Expiration:	2027
Licensed Thermal Power [MW(t)]:	3473
Net Capacity [MW(e)]:	1043
Type of Reactor:	BWR
Nuclear Steam Supply System Vendor:	GE

Cooling Water System

Type: Once-through
Source: Salt Creek
Source Temperature Range: 0–28°C (32–83°F)
Condenser Flow Rate: 35.89 m^3/s (568,701 gpm)
Design Condenser Temperature Rise: 13°C (23°F)
Intake Structure: Concrete structure at shoreline of North Fork Salt Creek
Discharge Structure: 5-km (3-mi) flume discharging to Salt Creek

Site Information

Total Area: 5702 ha (14,090 ac)
Exclusion Distance: 0.97 km (0.60 mi) radius
Low Population Zone: 4.02 km (2.5 mi) radius
Nearest City: Decatur; 2000 population: 81,860
Site Topography: Flat
Surrounding Area Topography: Flat
Dominant Land Cover Within 8 km (5 mi): Agriculture, forest, open water
Level 1 Ecoregion Within 8 km (5 mi): Eastern Temperate Forest
Level 3 Ecoregion Within 8 km (5 mi): Central Corn Belt Plains
Percent Wetland Within 8 km (5 mi): 9, mostly lake

Nearby Features: The nearest town is DeWitt 3 km (2 mi) ENE. Weldon Springs State Park is 10 km (6 mi) SW. The Illinois Central Gulf Railroad crosses the site. U.S. highway I-74 is 18 km (11 mi) NE. A dam on Salt Creek near the site creates the reservoir Lake Clinton for the cooling water system.

Population Within an 80 km (50 mi) Radius: 789,754

COLUMBIA GENERATING STATION

Location: Benton County, Washington
19 km (12 mi) NW of Richland
Latitude 46.4714°N; longitude 119.3331°W
Licensee: Energy Northwest

Unit Information	Unit 2
Docket Number:	50-397
Construction Permit:	1973
Operating License:	1984
Commercial Operation:	1984
License Expiration:	2024
Licensed Thermal Power [MW(t)]:	3323
Net Capacity [MW(e)]:	1131
Type of Reactor:	BWR
Nuclear Steam Supply System Vendor:	GE

Cooling Water System

Type: Mechanical draft cooling towers
Source: Columbia River
Source Temperature Range: 3–18°C (38–64°F)
Condenser Flow Rate: 35 m^3/s (550,000 gpm)
Design Condenser Temperature Rise: 15.9°C (28.7°F)
Intake Structure: 2 perforated pipe inlets supported offshore above the river bed 270 m (900 ft) from pump structure on river bank
Discharge Structure: Buried 5 km (3 mi) pipeline, terminating at the river bed 53 m (175 ft) from the shoreline

Site Information

Total Area: 1089 ac (441 ha)
Exclusion Distance: 1.95 km (1.21 mi) radius
Low Population Zone: 4.83 km (3 mi)
Nearest City: Spokane; 2000 population: 195,629
Site Topography: Flat
Surrounding Area Topography: Flat
Dominant Land Cover Within 8 km (5 mi): Shrub/scrub, open water, agriculture
Level 1 Ecoregion Within 8 km (5 mi): North American Desert

Level 3 Ecoregion Within 8 km (5 mi): Columbia Plateau
Percent Wetland Within 8 km (5 mi): 5.6, mostly lake
Nearby Features: The nearest town is Richland 14 km (9 mi) S. The site is in the SE part of the Hanford Reservation.
Population Within an 80 km (50 mi) Radius: 360,573

COMANCHE PEAK STEAM ELECTRIC STATION

Location: Somervell County, Texas
64 km (40 mi) SW of Fort Worth
Latitude 32.2983°N; longitude 97.7856°W
Licensee: Energy Future Holdings

Unit Information	Unit 1	Unit 2
Docket Number:	50-445	50-446
Construction Permit:	1974	1974
Operating License:	1990	1993
Commercial Operation:	1990	1993
License Expiration:	2030	2033
Licensed Thermal Power [MW(t)]:	3458	3458
Net Capacity [MW(e)]:	1150	1150
Type of Reactor:	PWR	PWR
Nuclear Steam Supply System Vendor:	WEST	WEST

Cooling Water System

Type: Once-through
Source: Squaw Creek Reservoir
Source Temperature Range: Not available
Condenser Flow Rate: 65 m^3/s (1,030,000 gpm)
Design Condenser Temperature Rise: 8°C (15°F)
Intake Structure: On shore of reservoir
Discharge Structure: Canal to reservoir

Site Information

Total Area: 3104 ha (7669 ac)
Exclusion Distance: 1.54 km (0.96 mi) minimum
Low Population Zone: 6.44 km (4 mi) radius
Nearest City: Fort Worth; 2000 population: 534,694
Site Topography: Flat, with hills rising from the reservoir
Surrounding Area Topography: Rolling to hilly
Dominant Land Cover Within 8 km (5 mi): Herbaceous, forest, open water
Level 1 Ecoregion Within 8 km (5 mi): Great Plains
Level 3 Ecoregion Within 8 km (5 mi): Cross Timbers
Percent Wetland Within 8 km (5 mi): 8.8, mostly lake

Nearby Features: The nearest town is Glen Rose 8 km (5 mi) SSE. Dinosaur Valley State Park is 8 km (5 mi) SW. A 66 cm (26 in) oil pipeline is very near the site and a 91 cm (36 in) natural gas line is about 3 km (2 mi) from the site.

Population Within an 80 km (50 mi) Radius: 1,431,094

COOPER NUCLEAR STATION

Location: Nemaha County, Nebraska
37 km (23 mi) S of Nebraska City
Latitude 40.3619°N; longitude 95.6411°W
Licensee: Nebraska Public Power District

Unit Information	Unit 1
Docket Number:	50-298
Construction Permit:	1968
Operating License:	1974
Commercial Operation:	1974
License Expiration:	2014
Licensed Thermal Power [MW(t)]:	2381
Net Capacity [MW(e)]:	760
Type of Reactor:	BWR
Nuclear Steam Supply System Vendor:	GE

Cooling Water System

Type: Once-through
Source: Missouri River
Source Temperature Range: 1–23°C (34–73°F)
Condenser Flow Rate: 39.8 m^3/s (631,000 gpm)
Design Condenser Temperature Rise: 10°C (18°F)
Intake Structure: At shoreline
Discharge Structure: At shoreline

Site Information

Total Area: 441 ha (1090 ac)
Exclusion Distance: 1.09 km (0.68 mi)
Low Population Zone: 1.61 km (1 mi) radius
Nearest City: Lincoln; 2000 population: 225,581
Site Topography: Flat
Surrounding Area Topography: Flat
Dominant Land Cover Within 8 km (5 mi): Agriculture, wetland, forest
Level 1 Ecoregion Within 8 km (5 mi): Great Plains
Level 3 Ecoregion Within 8 km (5 mi): Western Corn Belt Plains
Percent Wetland Within 8 km (5 mi): 6.8, mostly freshwater forested/shrub wetland; riverine

Nearby Features: The nearest town is Nemaha about 1.6 km (1 mi) S. A railroad runs just W of the site. Indian Cave State Park is about 13 km (8 mi) SSE.

Population Within an 80 km (50 mi) Radius: 156,157

CRYSTAL RIVER NUCLEAR POWER PLANT

Location: Citrus County, Florida
11 km (7 mi) NW of Crystal River
Latitude 28.9572°N; longitude 82.6989°W
Licensee: Progress Energy

Unit Information	Unit 3
Docket Number:	50-302
Construction Permit:	1968
Operating License:	1977
Commercial Operation:	1977
License Expiration:	2017
Licensed Thermal Power [MW(t)]:	2609
Net Capacity [MW(e)]:	838
Type of Reactor:	PWR
Nuclear Steam Supply System Vendor:	B&W

Cooling Water System

Type: Once-through
Source: Gulf of Mexico
Source Temperature Range: 31°C (87°F) maximum
Condenser Flow Rate: 43 m^3/s (680,000 gpm)
Design Condenser Temperature Rise: 9.5°C (17.1°F)
Intake Structure: 4900 m (16,000 ft) from shoreline
Discharge Structure: 4000 m (13,000 ft) canal

Site Information

Total Area: 1917 ha (4738 ac)
Exclusion Distance: 1.34 km (0.83 mi) radius
Low Population Zone: 8.05 km (5 mi)
Nearest City: Gainesville; 2000 population: 95,447
Site Topography: Swamps and marshland
Surrounding Area Topography: Flat
Dominant Land Cover Within 8 km (5 mi): Open water, wetland, forest
Level 1 Ecoregion Within 8 km (5 mi): Eastern Temperate Forest
Level 3 Ecoregion Within 8 km (5 mi): Southern Coastal Plain
Percent Wetland Within 8 km (5 mi): 65.2, mostly estuarine and marine deepwater

Nearby Features: The nearest town is Crystal River about 11 km (7 mi) SE. Units 1 and 2 are coal-fired plants and share a common intake and discharge with the nuclear unit.

Population Within an 80 km (50 mi) Radius: 1,273,146

DAVIS-BESSE NUCLEAR POWER STATION

Location: Ottawa County, Ohio
34 km (21 mi) E of Toledo
Latitude 41.5972°N; longitude 83.0864°W
Licensee: FirstEnergy Nuclear Operating Co.

Unit Information	Unit 1
Docket Number:	50-346
Construction Permit:	1971
Operating License:	1977
Commercial Operation:	1978
License Expiration:	2017
Licensed Thermal Power [MW(t)]:	2772
Net Capacity [MW(e)]:	889
Type of Reactor:	PWR
Nuclear Steam Supply System Vendor:	B&W

Cooling Water System

Type: Natural draft cooling tower
Source: Lake Erie
Source Temperature Range: 1–23°C (34–73°F)
Condenser Flow Rate: 30 m^3/s (480,000 gpm)
Design Condenser Temperature Rise: 14°C (26°F)
Intake Structure: Submerged intake about 900 m (3000 ft) offshore
Discharge Structure: Submerged discharge about 280 m (930 ft) offshore

Site Information

Total Area: 386 ha (954 ac)
Exclusion Distance: 0.72 km (0.45 mi) radius
Low Population Zone: 3.22 km (2 mi)
Nearest City: Toledo; 2000 population: 313,619
Site Topography: Flat
Surrounding Area Topography: Flat
Dominant Land Cover Within 8 km (5 mi): Open water, agriculture, wetland
Level 1 Ecoregion Within 8 km (5 mi): Eastern Temperate Forest
Level 3 Ecoregion Within 8 km (5 mi): Huron/Erie Lake Plains
Percent Wetland Within 8 km (5 mi): 66.6, mostly lake

Nearby Features: The nearest town is Oak Harbor about 10 km (6 mi) SW. Several wildlife refuge areas are within 8 km (5 mi) of the site.

Population Within an 80 km (50 mi) Radius: 2,617,550

DIABLO CANYON POWER PLANT

Location: San Luis Obispo County, California
19 km (12 mi) W of San Luis Obispo
Latitude 35.2117°N; longitude 120.8544°W
Licensee: Pacific Gas and Electric Co.

Unit Information	Unit 1	Unit 2
Docket Number:	50-275	50-323
Construction Permit:	1968	1970
Operating License:	1984	1985
Commercial Operation:	1985	1986
License Expiration:	2024	2025
Licensed Thermal Power [MW(t)]:	3411	3411
Net Capacity [MW(e)]:	1122	1118
Type of Reactor:	PWR	PWR
Nuclear Steam Supply System Vendor:	WEST	WEST

Cooling Water System

Type: Once-through
Source: Pacific Ocean
Source Temperature Range: 10–17°C (50–63°F)
Condenser Flow Rate: 54.5 m^3/s (863,000 gpm)
Design Condenser Temperature Rise: 10°C (18°F)
Intake Structure: Reinforced-concrete structure located at shoreline in a cove with artificial breakwater wall
Discharge Structure: Reinforced-concrete structure drops water in stair-step type weir overflow from elevation 21 m (70 ft) to the ocean and discharges on the surface at the shoreline

Site Information

Total Area: 300 ha (750 ac)
Exclusion Distance: 0.80 km (0.50 mi)
Low Population Zone: 9.66 km (6 mi)
Nearest City: Santa Barbara; 2000 population: 92,325
Site Topography: Hilly
Surrounding Area Topography: Hilly to mountainous
Dominant Land Cover Within 8 km (5 mi): Open water, forest, shrub/scrub

Level 1 Ecoregion Within 8 km (5 mi): Mediterranean California
Level 3 Ecoregion Within 8 km (5 mi): Southern and Central California Chaparral and Oak Woodlands
Percent Wetland Within 8 km (5 mi): 54.6, mostly estuarine and marine deepwater
Nearby Features: Site is remote, the nearest town being San Obispo 19 km (12 mi) E. Beaches 11–24 km (7–15 mi) ESE have an influx of summer visitors. Pismo Beach State Park and Morro Bay State Park are within 24 km (15 mi). Vandenberg Air Base is 56 km (35 mi) ESE.
Population Within an 80 km (50 mi) Radius: 836,031

DONALD C. COOK NUCLEAR PLANT

Location: Berrien County, Michigan
16 km (10 mi) S of St. Joseph
Latitude 41.9761°N; longitude 86.5664°W
Licensee: Indiana Michigan Power Co.

Unit Information	Unit 1	Unit 2
Docket Number:	50-315	50-316
Construction Permit:	1969	1969
Operating License:	1974	1977
Commercial Operation:	1975	1978
License Expiration:	2034	2037
Licensed Thermal Power [MW(t)]:	3304	3468
Net Capacity [MW(e)]:	1029	1077
Type of Reactor:	PWR	PWR
Nuclear Steam Supply System Vendor:	WEST	WEST

Cooling Water System

Type: Once-through
Source: Lake Michigan
Source Temperature Range: 1–23°C (34–73°F)
Condenser Flow Rate: 1.6 million gal/min (both units)
Design Condenser Temperature Rise: 11°C (20°F)
Intake Structure: Intake cribs 686 m (2250 ft) from shore
Discharge Structure: 351 m (1150 ft) from shore

Site Information

Total Area: 260 ha (650 ac)
Exclusion Distance: 0.61 km (0.38 mi)
Low Population Zone: 3.22 km (2 mi)
Nearest City: South Bend, Indiana; 2000 population: 107,789
Site Topography: Rolling
Surrounding Area Topography: Flat to rolling
Dominant Land Cover Within 8 km (5 mi): Open water, agriculture, forest
Level 1 Ecoregion Within 8 km (5 mi): Eastern Temperate Forest
Level 3 Ecoregion Within 8 km (5 mi): S. Michigan/N. Indiana Drift Plains
Percent Wetland Within 8 km (5 mi): 53.6, mostly lake

Nearby Features: The nearest town is Livingston 1.6 km (1 mi) SW. The Chesapeake and Ohio Railroad and U.S. Highway I-94 are just E of the site. Warren Dunes State Park is about 8 km (5 mi) SSW.

Population Within an 80 km (50 mi) Radius: 1,447,303

DRESDEN NUCLEAR POWER STATION

Location: Grundy County, Illinois
14 km (9 mi) E of Morris
Latitude 41.3897°N; longitude 88.2711°W
Licensee: Exelon Generation Company

Unit Information	Unit 2	Unit 3
Docket Number:	50-237	50-249
Construction Permit:	1966	1966
Operating License:	1969	1971
Commercial Operation:	1970	1971
License Expiration:	2029	2031
Licensed Thermal Power [MW(t)]:	2957	2957
Net Capacity [MW(e)]:	867	867
Type of Reactor:	BWR	BWR
Nuclear Steam Supply System Vendor:	GE	GE

Cooling Water System

Type: Cooling lake and spray canal; mechanical draft towers
Source: Kankakee River
Source Temperature Range: 4–29°C (40–85°F)
Condenser Flow Rate: 940,000 gpm (both units)
Design Condenser Temperature Rise: Not available
Intake Structure: Canal from Kankakee River to a crib house
Discharge Structure: A canal carries water to a cooling lake of about 516 ha (1275 ac)

Site Information

Total Area: 1012 ha (2500 ac)
Exclusion Distance: 0.8 km (0.5 mi) radius
Low Population Zone: 8 km (5 mi)
Nearest City: Joliet; 2000 population: 106,221
Site Topography: Flat
Surrounding Area Topography: Rolling
Dominant Land Cover Within 8 km (5 mi): Agriculture, herbaceous, forest
Level 1 Ecoregion Within 8 km (5 mi): Eastern Temperate Forest
Level 3 Ecoregion Within 8 km (5 mi): Central Corn Belt Plains
Percent Wetland Within 8 km (5 mi): 22, mostly lake

Nearby Features: The nearest town is Channahon 5 km (3 mi) NNE. Braidwood Station (nuclear plant) is about 16 km (10 mi) S and LaSalle County Station (nuclear plant) is about 35 km (22 mi) SW.

Population Within an 80 km (50 mi) Radius: 7,337,564

DUANE ARNOLD ENERGY CENTER

Location: Linn County, Iowa
13 km (8 mi) NW of Cedar Rapids
Latitude 42.1006°N; longitude 91.7772°W
Licensee: Florida Power & Light Co.

Unit Information	Unit 1
Docket Number:	50-331
Construction Permit:	1970
Operating License:	1974
Commercial Operation:	1975
License Expiration:	2014
Licensed Thermal Power [MW(t)]:	1912
Net Capacity [MW(e)]:	581
Type of Reactor:	BWR
Nuclear Steam Supply System Vendor:	GE

Cooling Water System

Type: Mechanical draft cooling towers
Source: Cedar River
Source Temperature Range: 0–32°C (32–89°F)
Condenser Flow Rate: 18 m^3/s (290,000 gpm)
Design Condenser Temperature Rise: 14°C (25°F)
Intake Structure: Structure on river shoreline
Discharge Structure: Canal to shoreline

Site Information

Total Area: 200 ha (500 ac)
Exclusion Distance: 0.43 km (0.27 mi)
Low Population Zone: 9.66 km (6 mi)
Nearest City: Cedar Rapids; 2000 population: 120,758
Site Topography: Flat
Surrounding Area Topography: Rolling to hilly
Dominant Land Cover Within 8 km (5 mi): Agriculture, forest, wetland
Level 1 Ecoregion Within 8 km (5 mi): Great Plains
Level 3 Ecoregion Within 8 km (5 mi): Western Corn Belt Plains
Percent Wetland Within 8 km (5 mi): 11.7, mostly freshwater forested/shrub wetland

Nearby Features: The nearest town is Palo about 3 km (2 mi) SW. Several wildlife refuge areas are within 16 km (10 mi) of the site.

Population Within an 80 km (50 mi) Radius: 613,736

EDWIN I. HATCH NUCLEAR PLANT

Location: Appling County, Georgia
18 km (11 mi) N of Baxley
Latitude 31.9342°N; longitude 82.3444°W
Licensee: Georgia Power Co.

Unit Information	Unit 1	Unit 2
Docket Number:	50-321	50-366
Construction Permit:	1969	1972
Operating License:	1974	1978
Commercial Operation:	1975	1979
License Expiration:	2034	2038
Licensed Thermal Power [MW(t)]:	2804	2804
Net Capacity [MW(e)]:	876	883
Type of Reactor:	BWR	BWR
Nuclear Steam Supply System Vendor:	GE	GE

Cooling Water System

Type: Mechanical draft towers
Source: Altamaha River
Source Temperature Range: 6–32°C (43–90°F)
Condenser Flow Rate: 35.1 m^3/s (556,000 gpm) each unit
Design Condenser Temperature Rise: 11°C (20°F)
Intake Structure: At edge of river
Discharge Structure: 37 m (120 ft) from shore

Site Information

Total Area: 908 ha (2244 ac)
Exclusion Distance: 1.26 km (0.78 mi)
Low Population Zone: 1.26 km (0.78 mi)
Nearest City: Savannah; 2000 population: 131,510
Site Topography: Flat to rolling
Surrounding Area Topography: Flat to rolling
Dominant Land Cover Within 8 km (5 mi): Forest, wetland, agriculture
Level 1 Ecoregion Within 8 km (5 mi): Eastern Temperate Forest
Level 3 Ecoregion Within 8 km (5 mi): Southeastern Plains; Southern Coastal Plain
Percent Wetland Within 8 km (5 mi): 23.9, mostly freshwater forested/shrub wetland

Nearby Features: The nearest town is Cedar Crossing about 11 km (7 mi) NNW. U.S. Highway 1 is just W of the site

Population Within an 80 km (50 mi) Radius: 366,508

ENRICO FERMI ATOMIC POWER PLANT

Location: Monroe County, Michigan
48 km (30 mi) SW of Detroit
Latitude 41.9631°N; longitude 83.2578°W
Licensee: Detroit Edison Co.

Unit Information	Unit 2
Docket Number:	50-341
Construction Permit:	1972
Operating License:	1985
Commercial Operation:	1988
License Expiration:	2025
Licensed Thermal Power [MW(t)]:	3292
Net Capacity [MW(e)]:	1122
Type of Reactor:	BWR
Nuclear Steam Supply System Vendor:	GE

Cooling Water System

Type: Natural draft cooling towers
Source: Lake Erie
Source Temperature Range: 1–24°C (34–76°F)
Condenser Flow Rate: 52.80 m^3/s (836,000 gpm)
Design Condenser Temperature Rise: 10°C (18°F)
Intake Structure: At edge of lake
Discharge Structure: To the lake via a 20-ha (50-ac) pond

Site Information

Total Area: 453 ha (1120 ac)
Exclusion Distance: 0.92 km (0.57 mi)
Low Population Zone: 4.83 km (3 mi)
Nearest City: Detroit; 2000 population: 951,270
Site Topography: Flat
Surrounding Area Topography: Flat to rolling
Dominant Land Cover Within 8 km (5 mi): Open water, agriculture, developed: high, medium, low density
Level 1 Ecoregion Within 8 km (5 mi): Eastern Temperate Forest
Level 3 Ecoregion Within 8 km (5 mi): Huron/Erie Lake Plains

Percent Wetland Within 8 km (5 mi): 57.9, mostly lake
Nearby Features: The town of Stony Point is adjacent to the site to the S. Sterling State Park and General Custer Historical Site are about 8 km (5 mi) SW.
Population Within an 80 km (50 mi) Radius: 7,803,464

JAMES A. FITZPATRICK NUCLEAR POWER PLANT

Location: Oswego County, New York
10 km (6 mi) NE of Oswego
Latitude 43.5239°N; longitude 76.3983°W
Licensee: Entergy Nuclear Operations, Inc.

Unit Information	Unit 1
Docket Number:	50-333
Construction Permit:	1970
Operating License:	1974
Commercial Operation:	1975
License Expiration:	2014
Licensed Thermal Power [MW(t)]:	2536
Net Capacity [MW(e)]:	852
Type of Reactor:	BWR
Nuclear Steam Supply System Vendor:	GE

Cooling Water System

Type: Once-through
Source: Lake Ontario
Source Temperature Range: 0–20°C (32–68°F)
Condenser Flow Rate: 22.25 m^3/s (352,600 gpm)
Design Condenser Temperature Rise: 18°C (32°F)
Intake Structure: 900 ft. from shore
Discharge Structure: 1400 ft. from shore

Site Information

Total Area: 284 ha (702 ac)
Exclusion Distance: 3000 ft to the east, over 1 mi to the west, and about 1.5 mi to the southern site boundary
Low Population Zone: 5.47 km (3.4 mi)
Nearest City: Syracuse; 2000 population: 147,306
Site Topography: Flat to rolling
Surrounding Area Topography: Rolling
Dominant Land Cover Within 8 km (5 mi): Open water, forest, agriculture
Level 1 Ecoregion Within 8 km (5 mi): Eastern Temperate Forest
Level 3 Ecoregion Within 8 km (5 mi): Eastern Great Lakes and Hudson Lowlands

Percent Wetland Within 8 km (5 mi): 65.4, mostly lake

Nearby Features: The nearest town is Lakeview about 1.6 km (1 mi) WSW. Fort Ontario is about 8 km (5 mi) SW. Nine Mile Point Nuclear Station is about 0.8 km (0.5 mi) W.

Population Within an 80 km (50 mi) Radius: 914,668

JOSEPH M. FARLEY NUCLEAR PLANT

Location: Houston County, Alabama
26 km (16 mi) E of Dothan
Latitude 31.2228°N; longitude 85.1125°W
Licensee: Alabama Power Co.

Unit Information	Unit 1	Unit 2
Docket Number:	50-348	50-364
Construction Permit:	1972	1972
Operating License:	1977	1981
Commercial Operation:	1977	1981
License Expiration:	2037	2041
Licensed Thermal Power [MW(t)]:	2775	2775
Net Capacity [MW(e)]:	851	860
Type of Reactor:	PWR	PWR
Nuclear Steam Supply System Vendor:	WEST	WEST

Cooling Water System

Type: Mechanical draft cooling towers
Source: Chattahoochee River
Source Temperature Range: 130°C (86°F) maximum
Condenser Flow Rate: 40.1 m^3/s (635,000 gpm) each unit
Design Condenser Temperature Rise: 11°C (20°F)
Intake Structure: Intake from river bank via storage pond
Discharge Structure: At river bank

Site Information

Total Area: 749 ha (1850 ac)
Exclusion Distance: 1.26 km (0.78 mi)
Low Population Zone: 3.22 km (2 mi)
Nearest City: Columbus, Georgia; 2000 population: 185,781
Site Topography: Flat to rolling
Surrounding Area Topography: Rolling
Dominant Land Cover Within 8 km (5 mi): Forest, agriculture, wetland
Level 1 Ecoregion Within 8 km (5 mi): Eastern Temperate Forest
Level 3 Ecoregion Within 8 km (5 mi): Southeastern Plains
Percent Wetland Within 8 km (5 mi): 13.1, mostly freshwater forested/shrub wetland

Nearby Features: The nearest town is Columbia about 6 km (4 mi) N. Chattahoochee State Park is about 19 km (12 mi) S.

Population Within an 80 km (50 mi) Radius: 393,639

FORT CALHOUN STATION

Location: Washington County, Nebraska
31 km (19 mi) N of Omaha
Latitude 41.5208°N; longitude 96.0767°W
Licensee: Omaha Public Power District

Unit Information	Unit 1
Docket Number:	50-285
Construction Permit:	1968
Operating License:	1973
Commercial Operation:	1974
License Expiration:	2033
Licensed Thermal Power [MW(t)]:	1500
Net Capacity [MW(e)]:	478
Type of Reactor:	PWR
Nuclear Steam Supply System Vendor:	CE

Cooling Water System

Type: Once-through
Source: Missouri River
Source Temperature Range: 0–27°C (32–80°F)
Condenser Flow Rate: 23 m^3/s (360,000 gpm)
Design Condenser Temperature Rise: 13°C (23°F)
Intake Structure: Concrete structure at river shore
Discharge Structure: At river shore

Site Information

Total Area: 270 ha (660 ac)
Exclusion Distance: 0.92 km (0.57 mi) minimum
Low Population Zone: 8.05 km (5 mi)
Nearest City: Omaha; 2000 population: 390,007
Site Topography: Flat to rolling
Surrounding Area Topography: Flat to rolling
Dominant Land Cover Within 8 km (5 mi): Agriculture, herbaceous, wetland
Level 1 Ecoregion Within 8 km (5 mi): Great Plains
Level 3 Ecoregion Within 8 km (5 mi): Western Corn Belt Plains

Percent Wetland Within 8 km (5 mi): 6.3, mostly lake; riverine; freshwater forested/shrub wetland

Nearby Features: The nearest town is De Soto 3 km (2 mi) SSE. De Soto National Wildlife Refuge is about 1.6 km (1 mi) E. Wilson Island State Park is about 6 km (4 mi) SE.

Population Within an 80 km (50 mi) Radius: 852,717

GRAND GULF NUCLEAR STATION

Location: Clairborne County, Mississippi
40 km (25 mi) S of Vicksburg
Latitude 32.0075°N; longitude 91.0475°W
Licensee: System Energy Resources, Inc.

Unit Information	Unit 1
Docket Number:	50-416
Construction Permit:	1974
Operating License:	1984
Commercial Operation:	1985
License Expiration:	2024
Licensed Thermal Power [MW(t)]:	3898
Net Capacity [MW(e)]:	1266
Type of Reactor:	BWR
Nuclear Steam Supply System Vendor:	GE

Cooling Water System

Type: Natural draft cooling towers
Source: Mississippi River
Source Temperature Range: 1–28°C (34–82°F)
Condenser Flow Rate: 36.1 m^3/s (572,000 gpm)
Design Condenser Temperature Rise: 17°C (30°F)
Intake Structure: A series of radial-collector wells along the shoreline
Discharge Structure: Discharge to river via a barge slip

Site Information

Total Area: 850 ha (2100 ac)
Exclusion Distance: 0.69 km (0.43 mi) radius
Low Population Zone: 3.22 km (2 mi)
Nearest City: Jackson; 2000 population: 184,256
Site Topography: Flat to rolling
Surrounding Area Topography: Flat to rolling
Dominant Land Cover Within 8 km (5 mi): Forest, wetland, open water
Level 1 Ecoregion Within 8 km (5 mi): Eastern Temperate Forest
Level 3 Ecoregion Within 8 km (5 mi): Mississippi Valley Loess Plains; Mississippi Alluvial Plain

Percent Wetland Within 8 km (5 mi): 39.4, mostly freshwater forested/shrub wetland
Nearby Features: The nearest town is Grand Gulf 3 km (2 mi) N. The Natchez Trace Parkway is about 10 km (6 mi) SE. The Grand Gulf Military Park is just N of the site.
Population Within an 80 km (50 mi) Radius: 357,525

H.B. ROBINSON STEAM ELECTRIC STATION

Location: Darlington County, South Carolina
42 km (26 mi) NE of Florence
Latitude 34.4025°N; longitude 80.1586°W
Licensee: Carolina Light and Power Co.

Unit Information	Unit 2
Docket Number:	50-261
Construction Permit:	1967
Operating License:	1970
Commercial Operation:	1971
License Expiration:	2030
Licensed Thermal Power [MW(t)]:	2339
Net Capacity [MW(e)]:	710
Type of Reactor:	PWR
Nuclear Steam Supply System Vendor:	WEST

Cooling Water System

Type: Once-through, cooling pond
Source: Lake Robinson
Source Temperature Range: 8–29°C (46–85°F)
Condenser Flow Rate: 28.7 m^3/s (454,167 gpm)
Design Condenser Temperature Rise: 10°C (18°F)
Intake Structure: Concrete structure on edge of lake
Discharge Structure: 6.8 km (4.2 mi) canal discharging about 6 km (4 mi) upstream from intake

Site Information

Total Area: 2435 ha (6020 ac)
Exclusion Distance: 0.43 km (0.27 mi) radius
Low Population Zone: 7.24 km (4.5 mi)
Nearest City: Columbia; 2000 population: 116,278
Site Topography: Rolling
Surrounding Area Topography: Rolling
Dominant Land Cover Within 8 km (5 mi): Forest, agriculture, herbaceous
Level 1 Ecoregion Within 8 km (5 mi): Eastern Temperate Forest
Level 3 Ecoregion Within 8 km (5 mi): Southeastern Plains
Percent Wetland Within 8 km (5 mi): 13.5, mostly freshwater forested/shrub wetland

Nearby Features: The nearest town is Hartsville 8 km (5 mi) SE. Unit 1 is an adjacent 185 MW(e) capacity coal-fired plant. Sand Hills State Forest is about 6 km (4 mi) N. The Carolina Sandhills National Wildlife Refuge is about 8 km (5 mi) NNW.

Population Within an 80 km (50 mi) Radius: 809,582

HOPE CREEK GENERATING STATION

Location: Salem County, New Jersey
13 km (8 mi) SW of Salem
Latitude 39.4678°N; longitude 75.5381°W
Licensee: Public Service Electric and Gas Co.

Unit Information	Unit 1
Docket Number:	50-354
Construction Permit:	1974
Operating License:	1986
Commercial Operation:	1986
License Expiration:	2026
Licensed Thermal Power [MW(t)]:	3339
Net Capacity [MW(e)]:	1061
Type of Reactor:	BWR
Nuclear Steam Supply System Vendor:	GE

Cooling Water System

Type: Natural draft cooling tower
Source: Delaware River
Source Temperature Range: 1–27°C (34–81°F)
Condenser Flow Rate: 34.8 m^3/s (552,000 gpm)
Design Condenser Temperature Rise: 16°C (28°F)
Intake Structure: At edge of river
Discharge Structure: Pipe 3 m (10 ft) offshore

Site Information

Total Area: 300 ha (740 ac)
Exclusion Distance: 0.90 km (0.56 mi) radius
Low Population Zone: 8.05 km (5 mi) radius
Nearest City: Wilmington, Delaware; 2000 population: 72,664
Site Topography: Flat
Surrounding Area Topography: Flat
Dominant Land Cover Within 8 km (5 mi): Open water, wetland, agriculture
Level 1 Ecoregion Within 8 km (5 mi): Eastern Temperate Forest
Level 3 Ecoregion Within 8 km (5 mi): Middle Atlantic Coastal Plain

Percent Wetland Within 8 km (5 mi): 82.4, mostly estuarine and marine deepwater; estuarine and marine wetland

Nearby Features: The nearest town is Port Penn about 6 km (4 mi) NW in Delaware. The nearest railroad is 13 km (8 mi) NE. The plant is on the same site as the Salem Nuclear Generating Station.

Population Within an 80 km (50 mi) Radius: 5,999,588

INDIAN POINT ENERGY CENTER

Location: Westchester County, New York
39 km (24 mi) N of New York City
Latitude 41.2714°N; longitude 73.9525°W
Licensee: Entergy Corporation

Unit Information	Unit 2	Unit 3
Docket Number:	50-247	50-286
Construction Permit:	1966	1969
Operating License:	1973	1976
Commercial Operation:	1974	1976
License Expiration:	2013	2016
Licensed Thermal Power [MW(t)]:	3216	3216
Net Capacity [MW(e)]:	1020	1025
Type of Reactor:	PWR	PWR
Nuclear Steam Supply System Vendor:	WEST	WEST

Cooling Water System

Type: Once-through
Source: Hudson River
Source Temperature Range: 0–26°C (32–78°F)
Condenser Flow Rate: 53 m^3/s (840,000 gal/min) each unit
Design Condenser Temperature Rise: 9.2°C (16.6°F)
Intake Structure: Concrete structure at river bank
Discharge Structure: Discharge canal to river exiting through 12 ports

Site Information

Total Area: 96.7 ha (239 ac)
Exclusion Distance: 0.32 km (0.20 mi) radius
Low Population Zone: 1.05 km (0.65 mi) radius
Nearest City: White Plains; 2000 population: 53,077
Site Topography: Hilly
Surrounding Area Topography: Hilly to mountainous
Dominant Land Cover Within 8 km (5 mi): Forest, open water, developed: open space
Level 1 Ecoregion Within 8 km (5 mi): Northern Forest
Level 3 Ecoregion Within 8 km (5 mi): Northeastern Highlands
Percent Wetland Within 8 km (5 mi): 19.0, mostly estuarine and marine deepwater

Nearby Features: The nearest town is Buchannan 3 km (2 mi) ESE. Camp Smith (military) is 1.6 km (1 mi) N and West Point is 13 km (8mi) N.

Population Within an 80 km (50 mi) Radius: 16,791,654

KEWAUNEE POWER STATION

Location: Kewaunee County, Wisconsin
43 km (27 mi) E of Green Bay
Latitude 44.3431°N; longitude 87.5361°W
Licensee: Dominion Resources

Unit Information	Unit 1
Docket Number:	50-305
Construction Permit:	1968
Operating License:	1973
Commercial Operation:	1974
License Expiration:	2013
Licensed Thermal Power [MW(t)]:	1772
Net Capacity [MW(e)]:	556
Type of Reactor:	PWR
Nuclear Steam Supply System Vendor:	WEST

Cooling Water System

Type: Once-through
Source: Lake Michigan
Source Temperature Range: 1–19°C (34–67°F)
Condenser Flow Rate: 27 m^3/s (420,000 gpm)
Design Condenser Temperature Rise: 11°C (19°F)
Intake Structure: Intake crib 4.6 km (15 ft) deep 533 m (1750 ft) from shore
Discharge Structure: At shoreline

Site Information

Total Area: 367 ha (908 ac)
Exclusion Distance: 1.21 km (0.75 mi)
Low Population Zone: 4.83 km (3 mi) radius
Nearest City: Green Bay; 2000 population: 102,313
Site Topography: Flat to rolling
Surrounding Area Topography: Flat to rolling
Dominant Land Cover Within 8 km (5 mi): Open Water, Agriculture, Wetland
Level 1 Ecoregion Within 8 km (5 mi): Eastern Temperate Forest
Level 3 Ecoregion Within 8 km (5 mi): Southeastern Wisconsin Till Plains
Percent Wetland Within 8 km (5 mi): 51.9, mostly lake

Nearby Features: The nearest town is Two Creeks about 5 km (3 mi) S. Point Beach Nuclear Plant is about 8 km (5 mi) S.

Population Within an 80 km (50 mi) Radius: 1,585,415

LASALLE COUNTY STATION

Location: LaSalle County, Illinois
18 km (11 mi) SE of Ottawa
Latitude 41.2439°N; longitude 88.6708°W
Licensee: Exelon Corporation

Unit Information	Unit 1	Unit 2
Docket Number:	50-373	50-374
Construction Permit:	1973	1973
Operating License:	1982	1984
Commercial Operation:	1984	1984
License Expiration:	2022	2024
Licensed Thermal Power [MW(t)]:	3489	3489
Net Capacity [MW(e)]:	1118	1120
Type of Reactor:	BWR	BWR
Nuclear Steam Supply System Vendor:	GE	GE

Cooling Water System

Type: Cooling pond
Source: Illinois River
Source Temperature Range: 8–29°C (47–85°F)
Condenser Flow Rate: 40.7 m^3/s (645,000 gpm) each unit
Design Condenser Temperature Rise: 13°C (24°F)
Intake Structure: Intake from 832.8 ha (2058 ac) cooling pond, makeup from river
Discharge Structure: Discharge to cooling pond

Site Information

Total Area: 1240 ha (3060 ac)
Exclusion Distance: 0.51 km (0.32 mi)
Low Population Zone: 6.41 km (3.98 mi)
Nearest City: Joliet; 2000 population: 106,221
Site Topography: Flat
Surrounding Area Topography: Flat with hills along river
Dominant Land Cover Within 8 km (5 mi): Agriculture, forest, open water
Level 1 Ecoregion Within 8 km (5 mi): Eastern Temperate Forest
Level 3 Ecoregion Within 8 km (5 mi): Central Corn Belt Plains
Percent Wetland Within 8 km (5 mi): 4.9, mostly lake

Nearby Features: The nearest town is Seneca about 8 km (5 mi) NNE. Braidwood Station (nuclear plant) is about 32 km (20 mi) ENE and Dresden Nuclear Power Station is about 35 km (22 mi) NE.

Population Within an 80 km (50 mi) Radius: 1,498,644

LIMERICK GENERATING STATION

Location: Montgomery County, Pennsylvania
34 km (21 mi) NW of Philadelphia
Latitude 40.2200°N; longitude 75.5900°W
Licensee: Exelon Corporation

Unit Information	Unit 1	Unit 2
Docket Number:	50-352	50-353
Construction Permit:	1974	1974
Operating License:	1985	1989
Commercial Operation:	1986	1989
License Expiration:	2025	2029
Licensed Thermal Power [MW(t)]:	3458	3458
Net Capacity [MW(e)]:	1134	1134
Type of Reactor:	BWR	BWR
Nuclear Steam Supply System Vendor:	GE	GE

Cooling Water System

Type: Natural draft cooling towers
Source: Schuylkill River
Source Temperature Range: 6–28°C (42–82°F)
Condenser Flow Rate: 28 m^3/s (450,000 gpm) each unit
Design Condenser Temperature Rise: 17°C (30°F)
Intake Structure: Intake from river
Discharge Structure: Discharge to river

Site Information

Total Area: 241 ha (595 ac)
Exclusion Distance: 0.76 km (0.47 mi)
Low Population Zone: 2.09 km (1.30 mi)
Nearest City: Reading; 2000 population: 81,207
Site Topography: Rolling
Surrounding Area Topography: Rolling
Dominant Land Cover Within 8 km (5 mi): Agriculture, forest, developed: high, medium, low density
Level 1 Ecoregion Within 8 km (5 mi): Eastern Temperate Forest
Level 3 Ecoregion Within 8 km (5 mi): Northern Piedmont

Percent Wetland Within 8 km (5 mi): 2, mostly riverine
Nearby Features: The nearest town is Linfield about 1.6 km (1 mi) SE. Valley Forge State Park is 16 km (10 mi) SSE. U.S. Highway I-76 is about 16 km (10 mi) S.
Population Within an 80 km (50 mi) Radius: 7,651,537

MCGUIRE NUCLEAR STATION

Location: Mecklenburg County, North Carolina
27 km (17 mi) NNW of Charlotte
Latitude 35.4322°N; longitude 80.9483°W
Licensee: Duke Power Co.

Unit Information	Unit 1	Unit 2
Docket Number:	50-369	50-370
Construction Permit:	1973	1973
Operating License:	1981	1983
Commercial Operation:	1981	1984
License Expiration:	2041	2043
Licensed Thermal Power [MW(t)]:	3411	3411
Net Capacity [MW(e)]:	1100	1100
Type of Reactor:	PWR	PWR
Nuclear Steam Supply System Vendor:	WEST	WEST

Cooling Water System

Type: Once-through
Source: Lake Norman
Source Temperature Range: 3–32°C (38–89°F)
Condenser Flow Rate: 111 m^3/s (1,756,944 gpm) both units
Design Condenser Temperature Rise: 12.3°C (22.1°F)
Intake Structure: Submerged and surface intakes at shoreline
Discharge Structure: 610 m (2000 ft) discharge canal

Site Information

Total Area: 234 ha (577 ac)
Exclusion Distance: 0.76 km (0.47 mi) radius
Low Population Zone: 8.85 km (5.50 mi)
Nearest City: Charlotte; 2000 population: 540,828
Site Topography: Rolling
Surrounding Area Topography: Hilly
Dominant Land Cover Within 8 km (5 mi): Forest, open water, agriculture
Level 1 Ecoregion Within 8 km (5 mi): Eastern Temperate Forest
Level 3 Ecoregion Within 8 km (5 mi): Piedmont
Percent Wetland Within 8 km (5 mi): 21.4, mostly lake

Nearby Features: The nearest town is Lowesville about 5 km (3 mi) W. The dam forming Lake Norman and a hydroelectric power plant are adjacent to the site.

Population Within an 80 km (50 mi) Radius: 2,425,097

MILLSTONE POWER STATION

Location: Millstone Nuclear Power Station
5 km (3 mi) WSW of New London
Latitude 41.3086°N; longitude 72.1681°W
Licensee: Dominion Resources

Unit Information	Unit 2	Unit 3
Docket Number:	50-336	50-423
Construction Permit:	1970	1974
Operating License:	1975	1986
Commercial Operation:	1975	1986
License Expiration:	2035	2046
Licensed Thermal Power [MW(t)]:	2700	3411
Net Capacity [MW(e)]:	882	1155
Type of Reactor:	PWR	PWR
Nuclear Steam Supply System Vendor:	CE	WEST

Cooling Water System

Type: Once-through
Source: Long Island Sound
Source Temperature Range: 2–22°C (36–72°F)
Condenser Flow Rate: 92 m^3/s (1.46 million gpm) both units
Design Condenser Temperature Rise: 13°C (21°F) for Unit 2
9.7°C (17.5°F) for Unit 3
Intake Structure: On shore of Niantic Bay off Long Island Sound
Discharge Structure: Discharge to Niantic Bay via holding pond

Site Information

Total Area: 200 ha (500 ac)
Exclusion Distance: 0.55 km (0.34 mi) minimum
Low Population Zone: 3.86 km (2.40 mi) radius
Nearest City: New Haven; 2000 population: 123,626
Site Topography: Flat
Surrounding Area Topography: Flat to rolling
Dominant Land Cover Within 8 km (5 mi): Open water, forest, developed: high, medium, low density
Level 1 Ecoregion Within 8 km (5 mi): Eastern Temperate Forest

Level 3 Ecoregion Within 8 km (5 mi): Northeastern Coastal Zone
Percent Wetland Within 8 km (5 mi): 53.5, mostly estuarine and marine deepwater
Nearby Features: The nearest town is Niantic 3 km (2 mi) NW. U.S. Highway I-95 is about 6 km (4 mi) NNE. Stone Ranch Military Reservation is about 10 km (6 mi) NW. Harkness Memorial State Park, Bluff Point State Park, and Rocky Neck State Park are within 8 km (5 mi) of the site. The U.S. Department of Agriculture Plum Island facility is 16 km (10 mi) S in Long Island Sound. The decommissioned Haddam Neck Plant (nuclear) is 32 km (20 mi) NW.
Population Within an 80 km (50 mi) Radius: 2,868,207

MONTICELLO NUCLEAR GENERATING PLANT

Location: Wright County, Minnesota
56 km (35 mi) NW of Minneapolis
Latitude 45.3333°N; longitude 93.8483°W
Licensee: Northern States Power Company

Unit Information	Unit 1
Docket Number:	50-263
Construction Permit:	1967
Operating License:	1970
Commercial Operation:	1971
License Expiration:	2030
Licensed Thermal Power [MW(t)]:	1775
Net Capacity [MW(e)]:	572
Type of Reactor:	BWR
Nuclear Steam Supply System Vendor:	GE

Cooling Water System

Type: Once-through and mechanical draft towers
Source: Mississippi River
Source Temperature Range: 0–29°C (32–85°F)
Condenser Flow Rate: 18 m^3/s (292,000 gpm)
Design Condenser Temperature Rise: 14.9°C (26.8°F)
Intake Structure: Canal
Discharge Structure: Canal

Site Information

Total Area: 860 ha (2150 ac)
Exclusion Distance: 0.48 km (0.30 mi)
Low Population Zone: 1.61 km (1 mi)
Nearest City: Minneapolis; 2000 population: 382,618
Site Topography: Flat terraces
Surrounding Area Topography: Flat to gently sloping
Dominant Land Cover Within 8 km (5 mi): Agriculture, forest, developed: open space
Level 1 Ecoregion Within 8 km (5 mi): Eastern Temperate Forest
Level 3 Ecoregion Within 8 km (5 mi): North Central Hardwood Forests

Percent Wetland Within 8 km (5 mi): 11.8, mostly freshwater emergent wetland; lake; freshwater forested/shrub wetland

Nearby Features: The business district of Monticello is about 3.2 km (2 mi) SE. Sherburne National Wildlife Refuge is about 14 km (9 mi) N. Lake Maria State Park is about 10 km (6 mi) WSW and Sand Dunes State Forest and campground are 14 km (9 mi) NE.

Population Within an 80 km (50 mi) Radius: 2,740,995

NINE MILE POINT NUCLEAR STATION

Location: Oswego County, New York
10 km (6 mi) NE of Oswego
Latitude 43.5222°N; longitude 76.4100°W
Licensee: Nine Mile Point Nuclear Station, LLC (Constellation Energy Group)

Unit Information	Unit 1	Unit 2
Docket Number:	50-220	50-410
Construction Permit:	1965	1974
Operating License:	1968	1987
Commercial Operation:	1969	1988
License Expiration:	2028	2047
Licensed Thermal Power [MW(t)]:	1850	3467
Net Capacity [MW(e)]:	621	1140
Type of Reactor:	BWR	BWR
Nuclear Steam Supply System Vendor:	GE	GE

Cooling Water System

Type: Unit 1: Once-through
Unit 2: Natural draft tower
Source: Lake Ontario
Source Temperature Range: 1–25°C (33–77°F)
Condenser Flow Rate: Unit 1: 18 m^3/s (290,278 gpm); Unit 2: 36.6 m^3/s (580,000 gpm)
Design Condenser Temperature Rise: Unit 1: 19.4°C (35°F);
Unit 2: 16.7°C (30°F)
Intake Structure: Unit 1: submerged pipeline about 260 m (850 ft) from shore;
Unit 2: submerged pipelines about 300 m (950 ft) and 320 m (1050 ft) from shore
Discharge Structure: Diffuser pipe 169 m (555 ft) long serving both sides

Site Information

Total Area: 360 ha (900 ac)
Exclusion Distance: 1.6 km (1 mi) to the east, 1.4 km (0.87 mi) to the southwest, and 2 km (1.3 mi) to the southern site boundary
Low Population Zone: 6.44 km (4 mi) radius
Nearest City: Syracuse; 2000 population: 147,306
Site Topography: Flat to rolling
Surrounding Area Topography: Rolling

Dominant Land Cover Within 8 km (5 mi): Open water, forest, agriculture
Level 1 Ecoregion Within 8 km (5 mi): Eastern Temperate Forest
Level 3 Ecoregion Within 8 km (5 mi): Eastern Great Lakes and Hudson Lowlands
Percent Wetland Within 8 km (5 mi): 65.7, mostly lake
Nearby Features: The nearest town is Lakeview about 1.6 km (1 mi) WSW. Fort Ontario is about 10 km (6 mi) SW. James A. Fitzpatrick Nuclear Power Plant is 0.8 km (0.5 mi) E.
Population Within an 80 km (50 mi) Radius: 914,668

NORTH ANNA POWER STATION

Location: Louisa County, Virginia
64 km (40 mi) NW of Richmond
Latitude 38.0608°N; longitude 77.7906°W
Licensee: Dominion Generation Co.

Unit Information	Unit 1	Unit 2
Docket Number:	50-338	50-339
Construction Permit:	1971	1971
Operating License:	1978	1980
Commercial Operation:	1978	1980
License Expiration:	2038	2040
Licensed Thermal Power [MW(t)]:	2893	2893
Net Capacity [MW(e)]:	924	910
Type of Reactor:	PWR	PWR
Nuclear Steam Supply System Vendor:	WEST	WEST

Cooling Water System

Type: Once-through
Source: Lake Anna
Source Temperature Range: 9–28°C (48–83°F)
Condenser Flow Rate: 120 m^3/s (1,900,000 gpm) both units
Design Condenser Temperature Rise: 8.1°C (14.5°F)
Intake Structure: Intake at lake shore
Discharge Structure: Discharged through lake via a 1400 ha (3400 ac) cooling pond

Site Information

Total Area: 7550 ha (18,643 ac)
Exclusion Distance: 1.35 km (0.84 mi)
Low Population Zone: 9.66 km (6 mi)
Nearest City: Richmond; 2000 population: 197,790
Site Topography: Rolling
Surrounding Area Topography: Rolling
Dominant Land Cover Within 8 km (5 mi): Agriculture, forest, agriculture, open water
Level 1 Ecoregion Within 8 km (5 mi): Eastern Temperate Forest
Level 3 Ecoregion Within 8 km (5 mi): Piedmont
Percent Wetland Within 8 km (5 mi): 21.1, mostly lake

Nearby Features: The nearest town is Centreville 1.6 km (1 mi) SW. Fredericksburg and Spotsylvania National Military Park is about 24 km (15 mi) NE.

Population Within an 80 km (50 mi) Radius: 1,614,983

OCONEE NUCLEAR STATION

Location: Oconee County, South Carolina
42 km (26 mi) W of Greenville
Latitude 34.7917°N; longitude 82.8986°W
Licensee: Duke Energy

Unit Information	Unit 1	Unit 2	Unit 3
Docket Number:	50-269	50-270	50-287
Construction Permit:	1967	1967	1967
Operating License:	1973	1973	1974
Commercial Operation:	1973	1974	1974
License Expiration:	2033	2033	2034
Licensed Thermal Power [MW(t)]:	2568	2568	2568
Net Capacity [MW(e)]:	846	846	846
Type of Reactor:	PWR	PWR	PWR
Nuclear Steam Supply System Vendor:	B&W	B&W	B&W

Cooling Water System

Type: Once-through
Source: Lake Keowee
Source Temperature Range: 7–25°C (44–77°F)
Condenser Flow Rate: 96 m^3/s (1,527,778 gpm) all units
Design Condenser Temperature Rise: 9.6°C (17.2°F)
Intake Structure: A skimmer wall draws water from the depths of 223 m (735 ft).
Discharge Structure: All three units discharge through one structure near the Keowee Dam.

Site Information

Total Area: 210 ha (510 acres)
Exclusion Distance: 1.6 km (1 mi) radius
Low Population Zone: 9.66 km (6 mi)
Nearest City: Greenville; 2000 population: 56,002
Site Topography: Flat to rolling
Surrounding Area Topography: Hilly
Dominant Land Cover Within 8 km (5 mi): Forest, open water, agriculture
Level 1 Ecoregion Within 8 km (5 mi): Eastern Temperate Forest
Level 3 Ecoregion Within 8 km (5 mi): Piedmont
Percent Wetland Within 8 km (5 mi): 22.3, mostly lake

Nearby Features: The nearest town is Six Mile 6 km (4 mi) ENE. Keowee Dam is close to the plant. Chattahoochee National Forest is about 24 km (15 mi) W.

Population Within an 80 km (50 mi) Radius: 1,226,479

OYSTER CREEK NUCLEAR GENERATING STATION

Location: Ocean County, New Jersey
14 km (9 mi) S of Toms River
Latitude 39.8142°N; longitude 74.2064°W
Licensee: AmerGen Energy, LLC

Unit Information	Unit 1
Docket Number:	50-219
Construction Permit:	1964
Operating License:	1969
Commercial Operation:	1969
License Expiration:	2009
Licensed Thermal Power [MW(t)]:	1930
Net Capacity [MW(e)]:	619
Type of Reactor:	BWR
Nuclear Steam Supply System Vendor:	GE

Cooling Water System

Type: Once-through
Source: Barnegat Bay
Source Temperature Range: 2–24°C (35–75°F)
Condenser Flow Rate: 29 m^3/s (460,000 gpm)
Design Condenser Temperature Rise: 8°C (14°F)
Intake Structure: Forked River serves as a canal for intake and discharge to Barnegat Bay.
Discharge Structure: Forked River serves as a canal for intake and discharge to Barnegat Bay.

Site Information

Total Area: 323.8 ha (800 ac)
Exclusion Distance: 0.40 km (0.25 mi)
Low Population Zone: 3.22 km (2 mi)
Nearest City: Atlantic City; 2000 population: 40,517
Site Topography: Flat
Surrounding Area Topography: Rolling plains to flat lowlands
Dominant Land Cover Within 8 km (5 mi): Forest, open water, developed: high, medium, low density
Level 1 Ecoregion Within 8 km (5 mi): Eastern Temperate Forest
Level 3 Ecoregion Within 8 km (5 mi): Atlantic Coastal Pine Barrens

Percent Wetland Within 8 km (5 mi): 45, mostly estuarine and marine deepwater; freshwater forested/shrub wetland

Nearby Features: The nearest town is Forked River about 3 km (2 mi) N. The Garden State Parkway is 1.6 km (1 mi) W. There is a large influx of recreationists and tourists in the summer.

Population Within an 80 km (50 mi) Radius: 4,243,462

PALISADES NUCLEAR PLANT

Location: Van Buren County, Michigan
56 km (35 mi) W of Kalamazoo
Latitude 42.3222°N; longitude 86.3153°W
Licensee: Entergy Corporation

Unit Information	Unit 1
Docket Number:	50-255
Construction Permit:	1967
Operating License:	1972
Commercial Operation:	1973
License Expiration:	2032
Licensed Thermal Power [MW(t)]:	2565
Net Capacity [MW(e)]:	778
Type of Reactor:	PWR
Nuclear Steam Supply System Vendor:	CE

Cooling Water System

Type: Mechanical draft cooling towers
Source: Lake Michigan
Source Temperature Range: 2–24°C (35–75°F)
Condenser Flow Rate: 6.2 m^3/s (98,000 gpm)
Design Condenser Temperature Rise: 14°C (25°F)
Intake Structure: Intake crib 1000 m (3300 ft) from shore
Discharge Structure: 33 m (108 ft) long canal

Site Information

Total Area: 174.8 ha (432 ac)
Exclusion Distance: 0.71 km (0.44 mi) radius
Low Population Zone: Not available
Nearest City: Kalamazoo; 2000 population: 77,145
Site Topography: Flat to rolling
Surrounding Area Topography: Rolling
Dominant Land Cover Within 8 km (5 mi): Open water, forest, agriculture
Level 1 Ecoregion Within 8 km (5 mi): Eastern Temperate Forest
Level 3 Ecoregion Within 8 km (5 mi): S. Michigan/N. Indiana Drift Plains
Percent Wetland Within 8 km (5 mi): 58.1, mostly lake

Nearby Features: The nearest town is South Haven about 6 km (4 mi) N. Van Buren State Park joins the plant on the north. Many tourists come to the beaches in the summer. The C&O Railway is about 3 km (2 mi) E. Highway I-196 is about 1.6 km (1 mi) E.

Population Within an 80 km (50 mi) Radius: 1,287,558

PALO VERDE NUCLEAR GENERATING STATION

Location: Maricopa County, Arizona
55 km (34 mi) W of Phoenix
Latitude 33.3881°N; longitude 112.8644°W
Licensee: Arizona Public Service Co.

Unit Information	Unit 1	Unit 2	Unit 3
Docket Number:	50-528	50-529	50-530
Construction Permit:	1976	1976	1976
Operating License:	1985	1986	1987
Commercial Operation:	1986	1986	1988
License Expiration:	2025	2026	2027
Licensed Thermal Power [MW(t)]:	3990	3990	3990
Net Capacity [MW(e)]:	1311	1314	1247
Type of Reactor:	PWR	PWR	PWR
Nuclear Steam Supply System Vendor:	CE	CE	CE

Cooling Water System

Type: Mechanical draft cooling towers treatment plant
Source: Phoenix City Sewage
Source Temperature Range: Not available
Condenser Flow Rate: 35 m^3/s (560,000 gpm) each unit
Design Condenser Temperature Rise: 17.8°C (32.1°F)
Intake Structure: 56 km (35 mi) underground pipeline from Phoenix 91st Avenue Sewage Treatment Plant
Discharge Structure: Blowdown from the circulating water system is directed to onsite evaporation ponds without requiring any offsite discharge

Site Information

Total Area: 1640 ha (4050 ac)
Exclusion Distance: 0.87 km (0.54 mi) minimum
Low Population Zone: 6.44 km (4 mi) radius
Nearest City: Phoenix; 2000 population: 1,321,045
Site Topography: Flat with hills
Surrounding Area Topography: Flat with hills
Dominant Land Cover Within 8 km (5 mi): Shrub/scrub, agriculture, developed: open space
Level 1 Ecoregion Within 8 km (5 mi): North American Desert

Level 3 Ecoregion Within 8 km (5 mi): Sonoran Basin and Range
Percent Wetland Within 8 km (5 mi): 1.2, mostly lake
Nearby Features: The nearest town is Wintersburg about 5 km (3 mi) N. U.S. Highway I-10 is about 11 km (7 mi) N. The Southern Pacific Railroad is about 8 km (5 mi) SE.
Population Within an 80 km (50 mi) Radius: 1,781,095

PEACH BOTTOM ATOMIC POWER STATION

Location: York County, Pennsylvania
29 km (18 mi) S of Lancaster
Latitude 39.7589°N; longitude 76.2692°W
Licensee: Exelon Co.

Unit Information	Unit 2	Unit 3
Docket Number:	50-277	50-278
Construction Permit:	1968	1968
Operating License:	1973	1974
Commercial Operation:	1974	1974
License Expiration:	2033	2034
Licensed Thermal Power [MW(t)]:	3514	3514
Net Capacity [MW(e)]:	1112	1112
Type of Reactor:	BWR	BWR
Nuclear Steam Supply System Vendor:	GE	GE

Cooling Water System

Type: Once-through, with helper mechanical draft towers
Source: Conowingo Pond
Source Temperature Range: 1–27°C (34–80°F)
Condenser Flow Rate: 95 m^3/s (1.5 million gpm) (both units)
Design Condenser Temperature Rise: 11.5°C (20.8°F)
Intake Structure: Intake from Conowingo Pond through a small intake pond
Discharge Structure: 1520 m (5000 ft) canal to Conowingo Pond

Site Information

Total Area: 248 ha (620 ac)
Exclusion Distance: 0.82 km (0.51 mi)
Low Population Zone: 2.22 km (1.38 mi)
Nearest City: Lancaster; 2000 population: 56,348
Site Topography: Rolling to hilly
Surrounding Area Topography: Rolling to hilly
Dominant Land Cover Within 8 km (5 mi): Agriculture, forest, open water
Level 1 Ecoregion Within 8 km (5 mi): Eastern Temperate Forest
Level 3 Ecoregion Within 8 km (5 mi): Northern Piedmont
Percent Wetland Within 8 km (5 mi): 14.5, mostly lake

Nearby Features: The nearest town is Slate Hill 3 km (2 mi) SW. Susquehanna State Park is about 5 km (3 mi) N. U.S. Highway I-95 is about 24 km (15 mi) SE. Conowingo Dam, about 13 km (8 mi) SE on the Susquehanna River, forms Conowingo Pond. Unit 1 is a 40 MW(e) nuclear plant on the same site and was retired from service in 1974. Three Mile Island Nuclear Station is 56 km (35 mi) upstream on the Susquehanna River.

Population Within an 80 km (50 mi) Radius: 5,270,600

PERRY NUCLEAR POWER PLANT

Location: Lake County, Ohio
11 km (7 mi) NE of Painesville
Latitude 41.8008°N; longitude 81.1442°W
Licensee: FirstEnergy Corporation

Unit Information	Unit 1
Docket Number:	50-440
Construction Permit:	1977
Operating License:	1986
Commercial Operation:	1987
License Expiration:	2026
Licensed Thermal Power [MW(t)]:	3758
Net Capacity [MW(e)]:	1231
Type of Reactor:	BWR
Nuclear Steam Supply System Vendor:	GE

Cooling Water System

Type: Natural draft cooling tower
Source: Lake Erie
Source Temperature Range: 0–26°C (32–79°F)
Condenser Flow Rate: 34.41 m^3/s (545,400 gpm)
Design Condenser Temperature Rise: 18°C (32°F)
Intake Structure: Submerged multiport structure 777m (2550 ft) offshore
Discharge Structure: Submerged diffuser 503 m (1650 ft) offshore

Site Information

Total Area: 450 ha (1100 ac)
Exclusion Distance: 0.89 km (0.55 mi) radius
Low Population Zone: 4.02 km (2.50 mi)
Nearest City: Euclid; 2000 population: 52,717
Site Topography: Flat
Surrounding Area Topography: Rolling
Dominant Land Cover Within 8 km (5 mi): Open water, forest, developed: high, medium, low density
Level 1 Ecoregion Within 8 km (5 mi): Eastern Temperate Forest

Level 3 Ecoregion Within 8 km (5 mi): Eastern Great Lakes and Hudson Lowlands; Erie Drift Plain
Percent Wetland Within 8 km (5 mi): 49.3, mostly lake
Nearby Features: The nearest town is North Perry 1.6 km (1 mi) SW. The Penn Central Railroad is about 5 km (3 mi) S. U.S. Highway I-90 is about 8 km (5 mi) S.
Population Within an 80 km (50 mi) Radius: 4,923,662

PILGRIM NUCLEAR POWER STATION

Location: Plymouth County, Massachusetts
6 km (4 mi) SE of Plymouth
Latitude 41.9444°N; longitude 70.5794°W
Licensee: Entergy Corporation

Unit Information	Unit 1
Docket Number:	50-293
Construction Permit:	1968
Operating License:	1972
Commercial Operation:	1972
License Expiration:	2012
Licensed Thermal Power [MW(t)]:	2028
Net Capacity [MW(e)]:	685
Type of Reactor:	BWR
Nuclear Steam Supply System Vendor:	GE

Cooling Water System

Type: Once-through
Source: Cape Cod Bay
Source Temperature Range: 2–22°C (35.6–71.6°F)
Condenser Flow Rate: 19.6 m^3/s (311,100 gpm)
Design Condenser Temperature Rise: 18°C (32°F)
Intake Structure: Concrete structure at edge of bay protected by a breakwater
Discharge Structure: 260 m (850 ft) long canal

Site Information

Total Area: 57 ha (140 ac)
Exclusion Distance: 0.53 km (0.33 mi)
Low Population Zone: 6.76 km (4.20 mi)
Nearest City: Brockton; 2000 population: 94,304
Site Topography: Flat to rolling
Surrounding Area Topography: Rolling to hilly
Dominant Land Cover Within 8 km (5 mi): Open water, forest, developed: high, medium, low density
Level 1 Ecoregion Within 8 km (5 mi): Eastern Temperate Forest

Level 3 Ecoregion Within 8 km (5 mi): Atlantic Coastal Pine Barrens; Northeastern Coastal Zone

Percent Wetland Within 8 km (5 mi): 64.4, mostly estuarine and marine deepwater

Nearby Features: The nearest town is Plymouth about 6 km (4 mi) NW. Miles Standish State Forest is about 10 km (6 mi) SW. Plymouth Rock and Plymouth Plantation historical sites are about 8 km (5 mi) W.

Population Within an 80 km (50 mi) Radius: 4,629,116

POINT BEACH NUCLEAR PLANT

Location: Manitowoc County, Wisconsin
21 km (13 mi) NNW of Manitowoc
Latitude 44.2808°N; longitude 87.5361°W
Licensee: Florida Power & Light Co.

Unit Information	Unit 1	Unit 2
Docket Number:	50-266	50-301
Construction Permit:	1967	1968
Operating License:	1970	1972
Commercial Operation:	1970	1972
License Expiration:	2030	2033
Licensed Thermal Power [MW(t)]:	1540	1540
Net Capacity [MW(e)]:	512	514
Type of Reactor:	PWR	PWR
Nuclear Steam Supply System Vendor:	WEST	WEST

Cooling Water System

Type: Once-through
Source: Lake Michigan
Source Temperature Range: Not available
Condenser Flow Rate: 22 m^3/s (350,000 gpm) each unit
Design Condenser Temperature Rise: 10.7°C (19.3°F)
Intake Structure: Submerged structure 533 m (1750 ft) from shore
Discharge Structure: 2 steel piling troughs, extending 61 m (200 ft) into Lake Michigan

Site Information

Total Area: 510 ha (1260 ac)
Exclusion Distance: 1.19 km (0.74 mi) radius
Low Population Zone: 9.01 km (5.60 mi)
Nearest City: Green Bay; 2000 population: 102,313
Site Topography: Flat to rolling
Surrounding Area Topography: Rolling
Dominant Land Cover Within 8 km (5 mi): Open water, agriculture, wetland
Level 1 Ecoregion Within 8 km (5 mi): Eastern Temperate Forest
Level 3 Ecoregion Within 8 km (5 mi): Southeastern Wisconsin Till Plains
Percent Wetland Within 8 km (5 mi): 54, mostly lake

Nearby Features: The nearest town is Two Creeks 1.6 km (1 mi) NNW. Point Beach State Forest is just S of the site. The Kewaunee Nuclear Power Plant is about 8 km (5 mi) N.

Population Within an 80 km (50 mi) Radius: 1,622,052

PRAIRIE ISLAND NUCLEAR GENERATING PLANT

Location: Goodhue County, Minnesota
45 km (28 mi) SE of Minneapolis
Latitude 44.6219°N; longitude 92.6331°W
Licensee: Northern States Power Co.

Unit Information	Unit 1	Unit 2
Docket Number:	50-282	50-306
Construction Permit:	1968	1968
Operating License:	1973	1974
Commercial Operation:	1973	1974
License Expiration:	2013	2014
Licensed Thermal Power [MW(t)]:	1650	1650
Net Capacity [MW(e)]:	551	545
Type of Reactor:	PWR	PWR
Nuclear Steam Supply System Vendor:	WEST	WEST

Cooling Water System

Type: Once-through and/or mechanical draft cooling towers
Source: Mississippi River
Source Temperature Range: 0–28°C (32–82°F)
Condenser Flow Rate: 18.6 m^3/s (294,000 gpm) each unit
Design Condenser Temperature Rise: 15°C (27°F)
Intake Structure: Short canal
Discharge Structure: Discharges to a basin then to towers and/or river

Site Information

Total Area: 230 ha (560 ac)
Exclusion Distance: 0.69 km (0.43 mi) radius
Low Population Zone: 2.41 km (1.50 mi)
Nearest City: Minneapolis; 2000 population: 382,618
Site Topography: Flat to rolling
Surrounding Area Topography: Rolling
Dominant Land Cover Within 8 km (5 mi): Agriculture, forest, wetland
Level 1 Ecoregion Within 8 km (5 mi): Eastern Temperate Forest
Level 3 Ecoregion Within 8 km (5 mi): Driftless Area
Percent Wetland Within 8 km (5 mi): 31.9, mostly freshwater forested/shrub wetland; lake

Nearby Features: The business district of the town of Red Wing is 9.6 km (6 mi) SE. A railroad line is just SW of the site.

Population Within an 80 km (50 mi) Radius: 2,731,953

QUAD CITIES NUCLEAR POWER STATION

Location: Rock Island County, Illinois
32 km (20 mi) NE of Moline
Latitude 41.7261°N; longitude 90.3100°W
Licensee: Exelon Generation Co.

Unit Information	Unit 1	Unit 2
Docket Number:	50-254	50-265
Construction Permit:	1967	1967
Operating License:	1972	1972
Commercial Operation:	1973	1973
License Expiration:	2032	2032
Licensed Thermal Power [MW(t)]:	2957	2957
Net Capacity [MW(e)]:	867	867
Type of Reactor:	BWR	BWR
Nuclear Steam Supply System Vendor:	GE	GE

Cooling Water System

Type: Once-through
Source: Mississippi River
Source Temperature Range: 0–29°C (32–85°F)
Condenser Flow Rate: 61 m^3/s (970,000 gpm) both units
Design Condenser Temperature Rise: 15.6°C (28°F)
Intake Structure: Canal at edge of river
Discharge Structure: Two-pipe diffuser system on bottom of river

Site Information

Total Area: 331 ha (817 ac)
Exclusion Distance: 0.80 km (0.50 mi)
Low Population Zone: 4.83 km (3 mi)
Nearest City: Davenport, Iowa; 2000 population: 98,359
Site Topography: Flat
Surrounding Area Topography: Flat
Dominant Land Cover Within 8 km (5 mi): Agriculture, wetland, forest
Level 1 Ecoregion Within 8 km (5 mi): Eastern Temperate Forest
Level 3 Ecoregion Within 8 km (5 mi): Interior River Valley and Hills; Western Corn Belt Plains
Percent Wetland Within 8 km (5 mi): 22.2, mostly freshwater forested/shrub wetland; lake

Nearby Features: The nearest town is Folletts 5 km (3 mi) NW. The Rock Island Railroad is 3 km (2 mi) W and the Chicago, Milwaukee, and St. Paul Railroad is 1.6 km (1 mi) E. The Rock Island Arsenal is about 24 km (15 mi) SW.

Population Within an 80 km (50 mi) Radius: 656,527

R.E. GINNA NUCLEAR POWER PLANT

Location: Wayne County, New York
32 km (20 mi) NE of Rochester
Latitude 43.2778°N; longitude 77.3089°W
Licensee: Constellation Energy Group

Unit Information	Unit 1
Docket Number:	50-244
Construction Permit:	1966
Operating License:	1969
Commercial Operation:	1970
License Expiration:	2029
Licensed Thermal Power [MW(t)]:	1775
Net Capacity [MW(e)]:	498
Type of Reactor:	PWR
Nuclear Steam Supply System Vendor:	WEST

Cooling Water System

Type: Once-through
Source: Lake Ontario
Source Temperature Range: 0–27°C (32–80°F)
Condenser Flow Rate: 21.4 m^3/s (340,000 gpm)
Design Condenser Temperature Rise: 11°C (20°F)
Intake Structure: 945 m (3100 ft) from shore, at a depth of 10 m (33 ft)
Discharge Structure: Canal discharges to Lake Ontario at shoreline.

Site Information

Total Area: 197 ha (488 ac)
Exclusion Distance: 0.47–1.38 km (0.29–0.85 mi)
Low Population Zone: 4.83 km (3 mi)
Nearest City: Rochester; 2000 population: 219,773
Site Topography: Gently rolling to flat
Surrounding Area Topography: Sloping
Dominant Land Cover Within 8 km (5 mi): Open water, agriculture, forest
Level 1 Ecoregion Within 8 km (5 mi): Eastern Temperate Forest
Level 3 Ecoregion Within 8 km (5 mi): Eastern Great Lakes and Hudson Lowlands
Percent Wetland Within 8 km (5 mi): 63.1, mostly lake

Nearby Features: The nearest town is Lakeside 3 km (2 mi) SW. The N.Y. Central Railroad is about 5 km (3 m) S.

Population Within an 80 km (50 mi) Radius: 1,250,000

RIVER BEND STATION

Location: West Feliciana County, Louisiana
39 km (24 mi) NNW of Baton Rouge
Latitude 30.7569°N; longitude 91.3314°W
Licensee: Entergy Nuclear

Unit Information	Unit 1
Docket Number:	50-458
Construction Permit:	1977
Operating License:	1985
Commercial Operation:	1986
License Expiration:	2025
Licensed Thermal Power [MW(t)]:	3091
Net Capacity [MW(e)]:	967
Type of Reactor:	BWR
Nuclear Steam Supply System Vendor:	GE

Cooling Water System

Type: Mechanical draft cooling towers
Source: Mississippi River
Source Temperature Range: Not available
Condenser Flow Rate: 32.08 m^3/s (508,470 gpm)
Design Condenser Temperature Rise: 15°C (27°F)
Intake Structure: At river bank
Discharge Structure: Pipe extending into the river

Site Information

Total Area: 1352 ha (3342 ac)
Exclusion Distance: 0.92 km (0.57 mi) radius
Low Population Zone: 4.02 km (2.50 mi) radius
Nearest City: Baton Rouge; 2000 population: 227,818
Site Topography: Flat
Surrounding Area Topography: Flat to rolling
Dominant Land Cover Within 8 km (5 mi): Wetland, forest, agriculture
Level 1 Ecoregion Within 8 km (5 mi): Eastern Temperate Forest
Level 3 Ecoregion Within 8 km (5 mi): Mississippi Valley Loess Plains; Mississippi Alluvial Plain
Percent Wetland Within 8 km (5 mi): 41.6, mostly freshwater forested/shrub wetland

Nearby Features: The nearest town is St. Francisville 5 km (3 mi) NW. Audubon Memorial State Park is about 5 km (3 mi) NNE. The Illinois Central Railroad crosses the site.

Population Within an 80 km (50 mi) Radius: 866,314

SAINT LUCIE NUCLEAR PLANT

Location: St. Lucie County, Florida
11 km (7 mi) SE of Fort Pierce
Latitude 27.3486°N; longitude 80.2464°W
Licensee: Florida Power & Light Co.

Unit Information	Unit 1	Unit 2
Docket Number:	50-335	50-389
Construction Permit:	1970	1977
Operating License:	1976	1983
Commercial Operation:	1976	1983
License Expiration:	2036	2043
Licensed Thermal Power [MW(t)]:	2700	2700
Net Capacity [MW(e)]:	839	839
Type of Reactor:	PWR	PWR
Nuclear Steam Supply System Vendor:	CE	CE

Cooling Water System

Type: Once-through
Source: Atlantic Ocean
Source Temperature Range: 31°C (87°F)
Condenser Flow Rate: 61 m^3/s (968,000 gpm) both units
Design Condenser Temperature Rise: 13°C (24°F).
Intake Structure: 370 m (1200 ft) offshore
Discharge Structure: Unit 1 is 460 m (1500 ft) offshore; Unit 2 is a multisport discharge 1040 m (3400 ft) offshore

Site Information

Total Area: 457 ha (1130 ac)
Exclusion Distance: 1.56 km (0.97 mi) radius
Low Population Zone: 1.61 km (1 mi)
Nearest City: West Palm Beach; 2000 population: 82,103
Site Topography: Flat land and water
Surrounding Area Topography: Flat
Dominant Land Cover Within 8 km (5 mi): Open water, wetland, developed: high, medium, low density
Level 1 Ecoregion Within 8 km (5 mi): Eastern Temperate Forest

Level 3 Ecoregion Within 8 km (5 mi): Southern Coastal Plain
Percent Wetland Within 8 km (5 mi): 77.8, mostly estuarine and marine deepwater
Nearby Features: The nearest town is Ankona 3 km (2 mi) W. The Florida East Coast Railroad is about 3 km (2 mi) W. The plant is on Hutchinson Island, which is separated from the mainland by the Indian River, which is part of the Intracoastal Waterway. A causeway to the mainland is about 10 km (6 mi) SSE.
Population Within an 80 km (50 mi) Radius: 1,180,000

SALEM NUCLEAR GENERATING STATION

Location: Salem County, New Jersey
13 km (8 mi) SW of Salem
Latitude 39.4628°N; longitude 75.5358°W
Licensee: Public Service Electric and Gas Co.

Unit Information	Unit 1	Unit 2
Docket Number:	50-272	50-311
Construction Permit:	1968	1968
Operating License:	1976	1981
Commercial Operation:	1977	1981
License Expiration:	2016	2021
Licensed Thermal Power [MW(t)]:	3459	3459
Net Capacity [MW(e)]:	1174	1130
Type of Reactor:	PWR	PWR
Nuclear Steam Supply System Vendor:	WEST	WEST

Cooling Water System

Type: Once-through
Source: Delaware River
Source Temperature Range: 1–26°C (33–79°F)
Condenser Flow Rate: 69 m^3/s (1,100,000 gpm) each unit
Design Condenser Temperature Rise: 7.6°C (13.6°F)
Intake Structure: 12-bay structure on edge of river
Discharge Structure: Submerged pipes extending 150 m (500 ft) into the river

Site Information

Total Area: 280 ha (700 ac)
Exclusion Distance: 1.29 km (0.80 mi)
Low Population Zone: 8.05 km (5 mi)
Nearest City: Wilmington, Delaware; 2000 population: 72,664
Site Topography: Flat
Surrounding Area Topography: Flat
Dominant Land Cover Within 8 km (5 mi): Open water, wetland, agriculture
Level 1 Ecoregion Within 8 km (5 mi): Eastern Temperate Forest
Level 3 Ecoregion Within 8 km (5 mi): Middle Atlantic Coastal Plain

Percent Wetland Within 8 km (5 mi): 84, mostly estuarine and marine deepwater; estuarine and marine wetland

Nearby Features: The nearest town is Port Penn about 6 km (4 mi) NW in Delaware. The nearest railroad is 13 km (8 mi) NE. The plant is on the same site as the Hope Creek Generating Station (nuclear).

Population Within an 80 km (50 mi) Radius: 5,975,864

SAN ONOFRE NUCLEAR GENERATING STATION

Location: San Diego County, California
8 km (5 mi) SE of San Clemente
Latitude 33.3703°N; longitude 117.5569°W
Licensee: Southern California Edison Co.

Unit Information	Unit 2	Unit 3
Docket Number:	50-361	50-362
Construction Permit:	1973	1973
Operating License:	1982	1983
Commercial Operation:	1983	1984
License Expiration:	2022	2023
Licensed Thermal Power [MW(t)]:	3438	3438
Net Capacity [MW(e)]:	1070	1080
Type of Reactor:	PWR	PWR
Nuclear Steam Supply System Vendor:	CE	CE

Cooling Water System

Type: Once-through
Source: Pacific Ocean
Source Temperature Range: 12–23°C (54–73°F)
Condenser Flow Rate: Unit 2: 50.3 m^3/s (797,000 gpm)
Design Condenser Temperature Rise: 11°C (20°F)
Intake Structure: Velocity-cap structure about 1040 m (3400 ft) from shore in water 9 m (30 ft) deep
Discharge Structure: Diffuser port systems extending 1160–2590 m (3800–8500 ft) from shore

Site Information

Total Area: 34 ha (84 ac)
Exclusion Distance: 0.60 km (0.37 mi)
Low Population Zone: 3.14 km (1.95 mi)
Nearest City: Oceanside; 2000 population: 161,029
Site Topography: Narrow, sloping coastal plain and sea cliffs
Surrounding Area Topography: Hilly
Dominant Land Cover Within 8 km (5 mi): Open water, shrub/scrub, developed: high, medium, low density
Level 1 Ecoregion Within 8 km (5 mi): Mediterranean California

Level 3 Ecoregion Within 8 km (5 mi): Southern and Central California Chaparral and Oak Woodlands

Percent Wetland Within 8 km (5 mi): 50.7, mostly estuarine and marine deepwater

Nearby Features: The nearest town is San Clemente 8 km (5 mi) NW. The site is surrounded by Camp Pendleton Marine Base. Camps on the base are 2.4 km (1.5 mi) or more from the site. U.S. Highway I-5 and the Atchison, Topeka, and Santa Fe Railroad are adjacent to the site to the east.

Population Within an 80 km (50 mi) Radius: 12,404,757

SEABROOK STATION

Location: Rockingham County, New Hampshire
21 km (13 mi) SSW of Portsmouth
Latitude 42.8983°N; longitude 70.8497°W
Licensee: Florida Power & Light Company

Unit Information	Unit 1
Docket Number:	50-443
Construction Permit:	1976
Operating License:	1990
Commercial Operation:	1990
License Expiration:	2032
Licensed Thermal Power [MW(t)]:	3648
Net Capacity [MW(e)]:	1244
Type of Reactor:	PWR
Nuclear Steam Supply System Vendor:	WEST

Cooling Water System

Type: Once-through
Source: Atlantic Ocean
Source Temperature Range: 3–13°C (37–55°F)
Condenser Flow Rate: 25.2 m^3/s (399,000 gpm)
Design Condenser Temperature Rise: 21°C (38°F)
Intake Structure: 3 structures 15 m (50 ft) below sea level with pipeline submerged about 50 m (175 ft) below mean sea level and extending about 2100 m (7000 ft) offshore
Discharge Structure: Submerged pipeline ending in a diffuser located about 1675 m (5500 ft) offshore and about 1525 m (5000 ft) S of intake

Site Information

Total Area: 363 ha (896 ac)
Exclusion Distance: 0.92 km (0.57 mi) minimum
Low Population Zone: 2.01 km (1.25 mi)
Nearest City: Lawrence, Massachusetts; 2000 population: 72,043
Site Topography: Flat
Surrounding Area Topography: Flat to rolling
Dominant Land Cover Within 8 km (5 mi): Open water, forest, developed: high, medium, low density

Level 1 Ecoregion Within 8 km (5 mi): Eastern Temperate Forest
Level 3 Ecoregion Within 8 km (5 mi): Northeastern Coastal Zone
Percent Wetland Within 8 km (5 mi): 45.2, mostly estuarine and marine deepwater; estuarine and marine wetland
Nearby Features: The nearest town is Seabrook 1.6 km (1 mi) W. U.S. Highway I-95 is about 1.6 km (1 mi) W. The Boston and Maine Railroad is adjacent to the site. Hampton Beach State Park is 3 km (2 mi) E.
Population Within an 80 km (50 mi) Radius: 6,932,660

SEQUOYAH NUCLEAR PLANT

Location: Hamilton County, Tennessee
16 km (10 mi) NE of Chattanooga
Latitude 35.2233°N; longitude 85.0878°W
Licensee: Tennessee Valley Authority

Unit Information	Unit 1	Unit 2
Docket Number:	50-327	50-328
Construction Permit:	1970	1970
Operating License:	1980	1981
Commercial Operation:	1981	1982
License Expiration:	2020	2021
Licensed Thermal Power [MW(t)]:	3455	3455
Net Capacity [MW(e)]:	1150	1127
Type of Reactor:	PWR	PWR
Nuclear Steam Supply System Vendor:	WEST	WEST

Cooling Water System

Type: Once-through and/or natural draft cooling towers
Source: Chickamauga Lake
Source Temperature Range: 6–28°C (42–83°F)
Condenser Flow Rate: 32.9 m^3/s (522,000 gpm) each unit
Design Condenser Temperature Rise: 17°C (30°F)
Intake Structure: Intake from lake
Discharge Structure: Discharge to lake

Site Information

Total Area: 212 ha (525 ac)
Exclusion Distance: 0.56 km (0.35 mi)
Low Population Zone: 4.83 km (3 mi)
Nearest City: Chattanooga; 2000 population: 155,554
Site Topography: Rolling
Surrounding Area Topography: Hilly
Dominant Land Cover Within 8 km (5 mi): Forest, agriculture, open water
Level 1 Ecoregion Within 8 km (5 mi): Eastern Temperate Forest
Level 3 Ecoregion Within 8 km (5 mi): Ridge and Valley
Percent Wetland Within 8 km (5 mi): 15.1, mostly lake

Nearby Features: The nearest town is Shady Grove about 3 km (2 mi) NW. Harrison Bay State Park is 5 km (3 mi) S. The Volunteer Ordnance Works is about 15 km (9 mi) S. Chickamauga Lake is part of the Tennessee River.

Population Within an 80 km (50 mi) Radius: 954,430

SHEARON HARRIS NUCLEAR POWER PLANT

Location: Wake County, North Carolina
32 km (20 mi) SW of Raleigh
Latitude 35.6336°N; longitude 78.9564°W
Licensee: Progress Energy

Unit Information	Unit 1
Docket Number:	50-400
Construction Permit:	1978
Operating License:	1987
Commercial Operation:	1987
License Expiration:	2027
Licensed Thermal Power [MW(t)]:	2900
Net Capacity [MW(e)]:	900
Type of Reactor:	PWR
Nuclear Steam Supply System Vendor:	WEST

Cooling Water System

Type: Natural draft cooling tower
Source: Buckhorn Creek
Source Temperature Range: 5–27°C (41–81°F)
Condenser Flow Rate: 30.5 m^3/s (483,000 gpm)
Design Condenser Temperature Rise: 14.3°C (25.7°F)
Intake Structure: At shoreline of reservoir on Buckhorn Creek
Discharge Structure: Discharged to reservoir

Site Information

Total Area: 4348 ha (10,744 ac)
Exclusion Distance: 6640 feet (northwest) to 7000 feet (east) to 7200 feet (south)
Low Population Zone: 4.83 km (3 mi)
Nearest City: Raleigh; 2000 population: 276,093
Site Topography: Rolling
Surrounding Area Topography: Rolling
Dominant Land Cover Within 8 km (5 mi): Forest, herbaceous, open water
Level 1 Ecoregion Within 8 km (5 mi): Eastern Temperate Forest
Level 3 Ecoregion Within 8 km (5 mi): Piedmont; Southeastern Plains
Percent Wetland Within 8 km (5 mi): 13.2, mostly lake

Nearby Features: The nearest town is Bonsal 3 km (2 mi) NW. The Seaboard Coast Line Railroad is 3 km (2 mi) NW. Buckhorn Creek feeds into the Cape Fear River.

Population Within an 80 km (50 mi) Radius: 2,035,797

SOUTH TEXAS PROJECT NUCLEAR GENERATING STATION

Location: Matagorda County, Texas
19 km (12 mi) SSW of Bay City
Latitude 28.7950°N; longitude 96.0481°W
Licensee: NRG Energy, Inc.

Unit Information	Unit 1	Unit 2
Docket Number:	50-498	50-499
Construction Permit:	1975	1975
Operating License:	1988	1989
Commercial Operation:	1988	1989
License Expiration:	2028	2029
Licensed Thermal Power [MW(t)]:	3853	3853
Net Capacity [MW(e)]:	1280	1280
Type of Reactor:	PWR	PWR
Nuclear Steam Supply System Vendor:	WEST	WEST

Cooling Water System

Type: Closed cycle cooling reservoir
Source: Colorado River
Source Temperature Range: 14–29°C (58–84°F)
Condenser Flow Rate: 57.26 m^3/s (907,400 gpm) each unit
Design Condenser Temperature Rise: 11°C (19°F)
Intake Structure: On bank of Colorado River
Discharge Structure: On bank of Colorado River

Site Information

Total Area: 4998 ha (12,350 ac)
Exclusion Distance: 1.43 km (0.89 mi) minimum
Low Population Zone: 4.83 km (3 mi)
Nearest City: Galveston; 2000 population: 57,247
Site Topography: Flat
Surrounding Area Topography: Flat
Dominant Land Cover Within 8 km (5 mi): Agriculture, open water, wetland
Level 1 Ecoregion Within 8 km (5 mi): Great Plains
Level 3 Ecoregion Within 8 km (5 mi): Western Gulf Coastal Plain
Percent Wetland Within 8 km (5 mi): 23.3, mostly lake

Nearby Features: The nearest town is Matagorda 13 km (8 mi) SE. The Missouri Pacific Railroad is about 8 km (5 mi) NNE. A 40-cm (16-in) natural gas pipeline is about 3 km (2 mi) NW.

Population Within an 80 km (50 mi) Radius: 402,902

SURRY POWER STATION

Location: Surry County, Virginia
27 km (17 mi) NW of Newport News
Latitude 37.1656°N; longitude 76.6983°W
Licensee: Dominion Generation

Unit Information	Unit 1	Unit 2
Docket Number:	50-280	20-281
Construction Permit:	1968	1968
Operating License:	1972	1973
Commercial Operation:	1972	1973
License Expiration:	2032	2033
Licensed Thermal Power [MW(t)]:	2546	2546
Net Capacity [MW(e)]:	799	799
Type of Reactor:	PWR	PWR
Nuclear Steam Supply System Vendor:	WEST	WEST

Cooling Water System

Type: Once-through
Source: James River
Source Temperature Range: 2–29°C (35–84°F)
Condenser Flow Rate: 106 m^3/s (1.68 million gpm) both units
Design Condenser Temperature Rise: 7.8°C (14°F)
Intake Structure: 2.7 km (1.7 mi) concrete canal
Discharge Structure: 880 m (2900 ft) canal

Site Information

Total Area: 340 ha (840 ac)
Exclusion Distance: 500 m (1650 ft) radius or 0.5 km (0.31 mi)
Low Population Zone: 4.83 km (3 mi)
Nearest City: Newport News; 2000 population: 180,150
Site Topography: Flat
Surrounding Area Topography: Flat
Dominant Land Cover Within 8 km (5 mi): Open water, forest, agriculture
Level 1 Ecoregion Within 8 km (5 mi): Eastern Temperate Forest
Level 3 Ecoregion Within 8 km (5 mi): Middle Atlantic Coastal Plain; Southeastern Plains
Percent Wetland Within 8 km (5 mi): 60.9, mostly estuarine and marine deepwater; riverine

Nearby Features: The nearest town is Scotland 8 km (5 mi) W. Jamestown Island, a Federal park, is 6 km (4 mi) NW. Chippokes Plantation, a state park, is 5 km (3 mi) WSW. Jamestown National Historical Park is 8 km (5 mi) WNW. Colonial Williamsburg is 11 km (7 mi) NNW. Adjacent to the site on the north is Hog Island, a waterfowl refuge. U.S. Highway I-64 is 19 km (12 mi) NW.

Population Within an 80 km (50 mi) Radius: 2,387,353

SUSQUEHANNA STEAM ELECTRIC STATION

Location: Luzerne County, Pennsylvania
11 km (7 mi) NE of Berwick
Latitude 41.0922°N; longitude 76.1467°W
Licensee: PPL

Unit Information	Unit 1	Unit 2
Docket Number:	50-387	50-388
Construction Permit:	1973	1973
Operating License:	1982	1984
Commercial Operation:	1983	1985
License Expiration:	2022	2024
Licensed Thermal Power [MW(t)]:	3952	3952
Net Capacity [MW(e)]:	1135	1140
Type of Reactor:	BWR	BWR
Nuclear Steam Supply System Vendor:	GE	GE

Cooling Water System

Type: Natural draft cooling towers
Source: Susquehanna River
Source Temperature Range: Not available
Condenser Flow Rate: 61 m^3/s (968,000 gpm) both units
Design Condenser Temperature Rise: 8°C (14°F)
Intake Structure: Intake bays on river bank
Discharge Structure: Diffuser pipe 200 ft (61m) from river bank

Site Information

Total Area: 1173 ac (475 ha)
Exclusion Distance: 0.55 km (0.34 mi) radius
Low Population Zone: 4.83 km (3 mi)
Nearest City: Wilkes-Barre; 2000 population: 43,123
Site Topography: Rolling
Surrounding Area Topography: Hilly with flat river valley
Dominant Land Cover Within 8 km (5 mi): Forest, agriculture, developed: open space
Level 1 Ecoregion Within 8 km (5 mi): Eastern Temperate Forest
Level 3 Ecoregion Within 8 km (5 mi): Ridge and Valley
Percent Wetland Within 8 km (5 mi): 4.6, mostly riverine

Nearby Features: The nearest town is Beach Haven about 1.6 km (1 mi) SW. U.S. Highway I-80 is 8 km (5 mi) E and the Delaware and Hudson Railroad is 1.6 km (1 mi) E.

Population Within an 80 km (50 mi) Radius: 1,684,794

THREE MILE ISLAND, UNIT 1

Location: Dauphin County, Pennsylvania
16 km (10 mi) SE of Harrisburg
Latitude 40.1531°N; longitude 76.7250°W
Licensee: Exelon Corporation

Unit Information	Unit 1
Docket Number:	50-289
Construction Permit:	1968
Operating License:	1974
Commercial Operation:	1974
License Expiration:	2014
Licensed Thermal Power [MW(t)]:	2568
Net Capacity [MW(e)]:	786
Type of Reactor:	PWR
Nuclear Steam Supply System Vendor:	B&W

Cooling Water System

Type: Natural draft cooling towers
Source: Susquehanna River
Source Temperature Range: 1–29°C (33–84°F)
Condenser Flow Rate: 27 m^3/s (430,000 gpm)
Design Condenser Temperature Rise: Not available
Intake Structure: Concrete structure on river bank
Discharge Structure: Discharged at the shoreline

Site Information

Total Area: 191 ha (472 ac)
Exclusion Distance: 0.61 km (0.38 mi) radius
Low Population Zone: 3.22 km (2 mi)
Nearest City: Harrisburg; 2000 population: 48,950
Site Topography: Flat
Surrounding Area Topography: Rolling to hilly
Dominant Land Cover Within 8 km (5 mi): Agriculture, forest, developed: high, medium, low density
Level 1 Ecoregion Within 8 km (5 mi): Eastern Temperate Forest
Level 3 Ecoregion Within 8 km (5 mi): Northern Piedmont

Percent Wetland Within 8 km (5 mi): 11.4, mostly riverine
Nearby Features: The nearest town is Middletown 6 km (4 mi) N. Harrisburg-York Airport is 13 km (8 mi) WNW. Unit 2 ceased operation after an accident in 1979. Peach Bottom Atomic Power Station is 56 km (35 mi) downstream.
Population Within an 80 km (50 mi) Radius: 2,466,679

TURKEY POINT NUCLEAR PLANT

Location: Dade County, Florida
40 km (25 mi) S of Miami
Latitude 25.4350°N; longitude 80.3314°W
Licensee: Florida Power and Light Co.

Unit Information	Unit 3	Unit 4
Docket Number:	50-250	50-251
Construction Permit:	1967	1967
Operating License:	1972	1973
Commercial Operation:	1972	1973
License Expiration:	2032	2033
Licensed Thermal Power [MW(t)]:	2300	2300
Net Capacity [MW(e)]:	693	693
Type of Reactor:	PWR	PWR
Nuclear Steam Supply System Vendor:	WEST	WEST

Cooling Water System

Type: Closed-cycle cooling canal
Source: Biscayne Bay
Source Temperature Range: 12–32°C (54–90°F)
Condenser Flow Rate: 82 m^3/s (1.3 million gpm) both units
Design Condenser Temperature Rise: 10°C (18°F)
Intake Structure: Intake canal and barge canal
Discharge Structure: Canal system covering about 1600 ha (4000 ac)

Site Information

Total Area: 9700 ha (24,000 ac)
Exclusion Distance: 1.27 km (0.79 mi)
Low Population Zone: 8.05 km (5 mi)
Nearest City: Miami; 2000 population: 362,470
Site Topography: Flat
Surrounding Area Topography: Flat
Dominant Land Cover Within 8 km (5 mi): Wetland, open water, agriculture
Level 1 Ecoregion Within 8 km (5 mi): Tropical Wet Forest
Level 3 Ecoregion Within 8 km (5 mi): Southern Florida Coastal Plain
Percent Wetland Within 8 km (5 mi): 91.5, mostly estuarine and marine deepwater

Nearby Features: The nearest town is Florida City about 14 km (9 mi) W. Hawk Missile Base is 1.6 km (1 mi) NW. Homestead Recreation Park is about 3 km (2 mi) NNW. The Florida East Coast Railroad is about 14 km (9 mi) NW. Units 1 and 2 are coal-fired and adjacent to the site.

Population Within an 80 km (50 mi) Radius: 7,490,123

VERMONT YANKEE NUCLEAR POWER STATION

Location: Windham County, Vermont
8 km (5 mi) S of Brattleboro
Latitude 42.7803°N; longitude 72.5158°W
Licensee: Entergy

Unit Information	Unit 1
Docket Number:	50-271
Construction Permit:	1967
Operating License:	1973
Commercial Operation:	1972
License Expiration:	2013
Licensed Thermal Power [MW(t)]:	1912
Net Capacity [MW(e)]:	650
Type of Reactor:	BWR
Nuclear Steam Supply System Vendor:	GE

Cooling Water System

Type: Once-through; closed-cycle mechanical draft towers
Source: Connecticut River
Source Temperature Range: 0–23°F (32–74°C)
Condenser Flow Rate: 22.7 m^3/s (360,000 gpm)
Design Condenser Temperature Rise: 13.4°F (10°C)
Intake Structure: Concrete structure at edge of river
Discharge Structure: Aerating structure discharges at edge of river

Site Information

Total Area: 50.6 ha (125 ac)
Exclusion Distance: 0.27 km (0.17 mi)
Low Population Zone: 8.05 km (5 mi)
Nearest City: Holyoke, Massachusetts; 2000 population: 39,838
Site Topography: Flat
Surrounding Area Topography: Rolling to hilly
Dominant Land Cover Within 8 km (5 mi): Forest, agriculture, developed: high, medium, low density
Level 1 Ecoregion Within 8 km (5 mi): Eastern Temperate Forest
Level 3 Ecoregion Within 8 km (5 mi): Northeastern Coastal Zone; Northeastern Highlands

Percent Wetland Within 8 km (5 mi): 6.1, mostly lake

Nearby Features: The nearest town is Vernon about 1.6 km (1 mi) W. Vernon Dam is 1 km (0.7 mi) downstream from the site. The decommissioned Yankee Nuclear Power Station is about 32 km (20 mi) WSW.

Population Within an 80 km (50 mi) Radius: 1,513,282

VIRGIL C. SUMMER NUCLEAR STATION

Location: Fairfield County, South Carolina
42 km (26 mi) NW of Columbia
Latitude 34.2958°N; longitude 81.3203°W
Licensee: South Carolina Electric and Gas Co.

Unit Information	Unit 1
Docket Number:	50-395
Construction Permit:	1973
Operating License:	1982
Commercial Operation:	1984
License Expiration:	2042
Licensed Thermal Power [MW(t)]:	2900
Net Capacity [MW(e)]:	966
Type of Reactor:	PWR
Nuclear Steam Supply System Vendor:	WEST

Cooling Water System

Type: Once-through
Source: Lake Monticello
Source Temperature Range: 11–33°C (52–91°F)
Condenser Flow Rate: 32 m^3/s (507,000 gpm)
Design Condenser Temperature Rise: 14°C (25°F)
Intake Structure: Intake at shoreline
Discharge Structure: Discharge to lake via a discharge basin and 305-m (1000-ft) canal

Site Information

Total Area: 890 ha (2200 ac)
Exclusion Distance: 1.63 m (1.01 mi) radius
Low Population Zone: 4.83 km (3 mi)
Nearest City: Columbia; 2000 population: 116,278
Site Topography: Rolling
Surrounding Area Topography: Rolling to hilly
Dominant Land Cover Within 8 km (5 mi): Forest, open water, herbaceous
Level 1 Ecoregion Within 8 km (5 mi): Eastern Temperate Forest
Level 3 Ecoregion Within 8 km (5 mi): Piedmont
Percent Wetland Within 8 km (5 mi): 20.2, mostly lake

Nearby Features: The nearest town is Jenkinsville 5 km (3 mi) SE. U.S. Highway I-26 is 11 km (7 mi) SSW. The Southern Railroad is 1.6 km (1 mi) W. The Fairfield pumped storage hydrostation is about 1.6 km (1 mi) NW and uses Lake Monticello as well as the Parr Reservoir.

Population Within an 80 km (50 mi) Radius: 1,032,330

VOGTLE ELECTRIC GENERATING PLANT

Location: Burke County, Georgia
42 km (26 mi) SE of Augusta
Latitude 33.1414°N; longitude 81.7625°W
Licensee: Georgia Power Co.

Unit Information	Unit 1	Unit 2
Docket Number:	50-424	50-425
Construction Permit:	1974	1974
Operating License:	1987	1989
Commercial Operation:	1987	1989
License Expiration:	2027	2029
Licensed Thermal Power [MW(t)]:	3565	3565
Net Capacity [MW(e)]:	1152	1149
Type of Reactor:	PWR	PWR
Nuclear Steam Supply System Vendor:	WEST	WEST

Cooling Water System

Type: Natural draft cooling towers
Source: Savannah River
Source Temperature Range: 4–30°C (39–86°F)
Condenser Flow Rate: 32.16 m^3/s (509,600 gpm) each unit
Design Condenser Temperature Rise: 18°C (33°F)
Intake Structure: At river bank
Discharge Structure: Single-point discharge pipe near the shoreline

Site Information

Total Area: 1282 ha (3169 ac)
Exclusion Distance: 1.09 km (0.68 mi) minimum
Low Population Zone: 3.22 km (2 mi) radius
Nearest City: Augusta-Richmond County; 2000 population: 195,182
Site Topography: Rolling
Surrounding Area Topography: Rolling, river flood plain
Dominant Land Cover Within 8 km (5 mi): Forest, wetland, herbaceous
Level 1 Ecoregion Within 8 km (5 mi): Eastern Temperate Forest
Level 3 Ecoregion Within 8 km (5 mi): Southeastern Plains
Percent Wetland Within 8 km (5 mi): 27.4, mostly freshwater forested/shrub wetland

Nearby Features: The nearest town is Shell Bluff about 11 km (7 mi) W. The Seaboard Coast Line Railroad is about 6 km (4 mi) NE. The Department of Energy Savannah River Plant is about 16 km (10 mi) NNE.

Population Within an 80 km (50 mi) Radius: 670,000

WATERFORD STEAM ELECTRIC STATION

Location: St. Charles County, Louisiana
32 km (20 mi) W of New Orleans
Latitude 29.9947°N; longitude 90.4711°W
Licensee: Entergy

Unit Information	Unit 3
Docket Number:	50-382
Construction Permit:	1974
Operating License:	1985
Commercial Operation:	1985
License Expiration:	2025
Licensed Thermal Power [MW(t)]:	3716
Net Capacity [MW(e)]:	1152
Type of Reactor:	PWR
Nuclear Steam Supply System Vendor:	CE

Cooling Water System

Type: Once-through
Source: Mississippi River
Source Temperature Range: 8–28°C (46–82°F)
Condenser Flow Rate: 61.53 m^3/s (975,000 gpm)
Design Condenser Temperature Rise: 9°C (16°F)
Intake Structure: At river bank
Discharge Structure: At river bank

Site Information

Total Area: 1441 ha (3561 ac)
Exclusion Distance: 0.92 km (90.57 mi) radius
Low Population Zone: 3.22 km (2 mi)
Nearest City: New Orleans; 2000 population: 484,674
Site Topography: Flat
Surrounding Area Topography: Flat
Dominant Land Cover Within 8 km (5 mi): Wetland, agriculture, developed: high, medium, low density
Level 1 Ecoregion Within 8 km (5 mi): Eastern Temperate Forest
Level 3 Ecoregion Within 8 km (5 mi): Mississippi Alluvial Plain

Percent Wetland Within 8 km (5 mi): 67.8, mostly freshwater forested/shrub wetland

Nearby Features: The nearest town is Killona 1.6 km (1 mi) WNW. U.S. Highway I-10 is about 11 km (7 mi) NE and I-90 about 11 km (7 mi) SE. Several active and abandoned gas and oil fields are within 16 km (10 mi). Lake Pontchartrain is about 11 km (7 mi) NE. The Missouri Pacific Railroad is just S of the site and the Southern Pacific Railroad is about 13 km (8mi) SE.

Population Within an 80 km (50 mi) Radius: 2,072,270

WATTS BAR NUCLEAR PLANT

Location: Rhea County, Tennessee
11 km (7 mi) SSE of Spring City
Latitude 35.6022°N; longitude 84.7894°W
Licensee: Tennessee Valley Authority

Unit Information	Unit 1[(a)]
Docket Number:	50-390
Construction Permit:	1973
Operating License:	1996
Commercial Operation:	1996
License Expiration:	2035
Licensed Thermal Power [MW(t)]:	3459
Net Capacity [MW(e)]:	1121
Type of Reactor:	PWR
Nuclear Steam Supply System Vendor:	WEST

Cooling Water System

Type: Natural draft cooling towers
Source: Chickamauga Lake
Source Temperature Range: 6–28°C (43–82°F)
Condenser Flow Rate: 26 m^3/s (410,000 gpm) each unit
Design Condenser Temperature Rise: 21°C (38°F)
Intake Structure: At lake bank
Discharge Structure: To lake via a holding pond

Site Information

Total Area: 716 ha (1770 ac)
Exclusion Distance: 1.21 km (0.75 mi) radius
Low Population Zone: 4.83 km (3 mi)
Nearest City: Chattanooga; 2000 population: 155,554
Site Topography: Flat to rolling
Surrounding Area Topography: Rolling to hilly

(a) Construction of Unit 1 was halted in 1985, resumed in 1990, and completed in 1995. Construction of Unit 2 was halted in 1985 but was scheduled to resume in 2007.

Dominant Land Cover Within 8 km (5 mi): Forest, agriculture, open water
Level 1 Ecoregion Within 8 km (5 mi): Eastern Temperate Forest
Level 3 Ecoregion Within 8 km (5 mi): Ridge and Valley
Percent Wetland Within 8 km (5 mi): 10.9, mostly lake
Nearby Features: The nearest town is Peakland 3 km (2 mi) NE. Watts Bar Dam is 1.6 km (1 mi) N. A fossil-fired steam plant is just N of the site. U.S. Highway I-75 is about 18 km (11 mi) SE. The New Orleans and Texas Pacific Railroad is 11 km (7 mi) NW. Chickamauga Lake is on the Tennessee River.
Population Within an 80 km (50 mi) Radius: 1,044,454

WOLF CREEK GENERATING STATION

Location: Coffey County, Kansas
6 km (4 mi) NE of Burlington
Latitude 38.2386°N; longitude 95.6894°W
Licensee: Wolf Creek Nuclear Operating Corporation

Unit Information	Unit 1
Docket Number:	50-482
Construction Permit:	1977
Operating License:	1985
Commercial Operation:	1985
License Expiration:	2025
Licensed Thermal Power [MW(t)]:	3565
Net Capacity [MW(e)]:	1166
Type of Reactor:	PWR
Nuclear Steam Supply System Vendor:	WEST

Cooling Water System

Type: Closed-cycle cooling pond
Source: Wolf Creek
Source Temperature Range: 0–31°C (32–87°F)
Condenser Flow Rate: 30m^3/s (500,000 gpm)
Design Condenser Temperature Rise: 1.1°C (30°F)
Intake Structure: On the shore of cooling lake
Discharge Structure: Discharged to 2060 ha (5090 ac) cooling lake, into an embayment separated from the intake

Site Information

Total Area: 3973 ha (9818 ac)
Exclusion Distance: 1.21 km (0.75 mi) radius
Low Population Zone: 4.02 km (2.5 mi) radius
Nearest City: Topeka; 2000 population: 122,377
Site Topography: Flat to rolling
Surrounding Area Topography: Flat to rolling
Dominant Land Cover Within 8 km (5 mi): Herbaceous, agriculture, open water
Level 1 Ecoregion Within 8 km (5 mi): Great Plains
Level 3 Ecoregion Within 8 km (5 mi): Central Irregular Plains

Percent Wetland Within 8 km (5 mi): 14.8, mostly lake

Nearby Features: The nearest town is Sharpe about 3 km (2 mi) N. The Flint Hills National Wildlife Refuge is about 11 km (7 mi) W. The John Redmond Reservoir is about 6 km (4 mi) W. U.S. Highway I-35 is 23 km (14 mi) N. The cooling lake is formed by a dam on Wolf Creek.

Population Within an 80 km (50 mi) Radius: 176,301

REFERENCES

Commission for Environmental Cooperation (CEC). 2006. *Level I Ecological Regions of North America, Commission for Environmental Cooperation*. Available URL: http://www.epa.gov/wed/pages/ecoregions/na_eco.htm#Level%20I (Accessed November 6, 2007).

Energy Information Administration (EIA). 2007. *Nuclear Power Plants Operating in the United States as of September 30, 2005*. Available URL: http://www.eia.doe.gov/cneaf/nuclear/page/at_a_glance/reactors/nuke1.html (Accessed December 5, 2007).

Energy Information Administration (EIA). 2007. *Monthly Nuclear Utility Generation by State and Reactor, 2007 – January through October*. Available URL: http://www.eia.doe.gov/cneaf/nuclear/page/nuc_generation/usreactors.xls (Accessed February 6, 2008).

U.S. Census Bureau (USCB). 2007. *State and County Quickfacts*. Available URL: http://quickfacts.census.gov/qfd/index.html (Accessed December 5, 2007).

U.S. Environmental Protection Agency (EPA). 2007. *Level III Ecoregions of the Conterminous United States*. National and Environmental Effects Research Laboratory. Revised March, 2007. Available URL: http://www.epa.gov/wed/pages/ecoregions/level_iii.htm (Accessed November 6, 2007).

U.S. Geological Survey (USGS). 2003. *National Land Cover Database*. Sioux Falls, South Dakota.

U.S. Fish and Wildlife Service (USFWS). 2007. *National Wetlands Inventory*. Available URL: http://wetlandsfws.er.usgs.gov/NWI/index.html (Accessed November 7, 2007).

U.S. Nuclear Regulatory Commission (NRC). 1996. *Generic Environmental Impact Statement for License Renewal of Nuclear Plants*. NUREG-1437, Vols. 1 and 2, Washington, D.C.

U.S. Nuclear Regulatory Commission (NRC). 2008. *Approved Applications for Power Uprates*. Available URL: http://www.nrc.gov/reactors/operation/licensing/power-uprates/approved-applications.html (Accessed February 6, 2008).

Appendix D

Technical Basis for GEIS Analysis

Appendix D

Technical Basis for GEIS Analysis

D.1. Land Use and Visual Resources

D.1.1 Description of Affected Resources and Region of Influence

Onsite land use resources that would be affected include all of the land and water situated within the plant site property boundaries, whether open to the public or under various levels of access control. For license renewal, current land use patterns would remain unchanged, while additional land areas onsite would be disturbed during refurbishment and decommissioning activities, although these could be areas that had formerly been used for construction or outage purposes. Offsite affected land resources include the host local jurisdictions and taxing authorities where revenue streams, workforce residence distribution, development patterns, and growth management practices have direct and indirect impacts on land use. Land cover types within 5 mi of operating nuclear plants are described in Table D.1-1. Transmission lines affect the land use within the right-of-way (ROW) corridor through a variety of restrictions that were instituted during land or easement acquisition. The region of influence for visual resource impacts can include all areas where plant facilities are visible.

D.1.2 Description of Impact Assessment

Onsite land use impacts were examined through a review of a select number of supplemental environmental impact statements (SEISs) to determine site estimations of disturbances and resources required during license renewal, as well as the information provided in the 1996 GEIS (NRC 1996) and the decommissioning GEIS (NRC 2002). Offsite impacts were assessed based on information provided in the 1996 GEIS that was derived from a survey of professional literature, a survey of newspaper and magazine accounts related to the issues, a survey of all operating nuclear power plants, and experiences at seven selected case study sites. Information provided in the decommissioning GEIS addressed impacts for plants that have undergone decommissioning or are in the process of decommissioning. Additional information for assessing offsite impacts came from a literature search on land use controls and workforce impacts with respect to nuclear power plants, as well as a review of selected SEISs. The evaluation of land use impacts of transmission lines was derived from information provided in the 1996 GEIS and a review of selected SEISs. The assessment of visual resource impacts resulting from the presence of the site, continued operation of plant facilities and transmission lines, or the decommissioning of a facility was derived from the evaluation presented in the

Table D.1-1 Land Cover within 5 Miles of Operating Nuclear Power Plants

Site Name	Percent of Land Cover Type									
	Barren Land	Agriculture	Forest	Developed – High, Medium, Low Density	Developed – Open Space	Wetland	Herbaceous	Open Water	Shrub/ Scrub	Total Percent
Region I										
Beaver Valley	0.0	13.1	65.2	4.6	10.0	0.1	1.6	5.5	0.0	100.0
Calvert Cliffs	0.8	9.1	30.5	2.2	2.2	2.9	0.0	52.4	0.0	100.0
Fitzpatrick	0.0	7.2	20.0	0.9	1.5	4.9	0.1	60.5	4.8	100.0
Ginna	0.0	16.4	16.0	1.0	2.4	1.3	0.1	61.8	0.8	100.0
Hope Creek	0.8	14.4	1.9	0.8	0.4	38.0	0.0	43.7	0.0	100.0
Indian Point	0.1	2.2	48.0	12.3	15.9	4.2	0.8	16.3	0.2	100.0
Limerick	0.5	46.0	22.8	16.9	10.9	2.1	0.0	0.9	0.0	100.0
Millstone	0.9	0.9	19.6	13.9	7.5	4.7	0.5	51.3	0.7	100.0
Nine Mile Point	0.0	7.0	19.8	1.0	1.5	4.9	0.1	60.8	4.9	100.0
Oyster Creek	1.3	4.2	37.7	13.8	5.7	12.3	0.0	24.9	0.0	100.0
Peach Bottom	1.0	51.1	30.9	0.6	0.4	2.0	0.0	14.0	0.0	100.0
Pilgrim	3.5	2.5	18.3	7.0	6.3	1.7	0.4	59.7	0.7	100.0
Salem	0.7	13.2	1.6	0.8	0.4	38.7	0.0	44.6	0.0	100.0
Seabrook	1.1	5.1	22.7	19.3	7.5	18.8	0.5	24.2	0.8	100.0
Susquehanna	0.3	26.1	60.5	3.1	5.4	0.9	0.0	3.2	0.5	100.0
Three Mile Island	0.8	37.2	29.5	11.6	7.3	2.4	0.0	11.2	0.0	100.0
Vermont Yankee	0.1	9.4	75.5	4.4	3.1	2.6	0.2	3.9	0.8	100.0
Region II										
Browns Ferry	0.4	43.0	10.8	1.5	3.8	8.3	1.6	26.6	4.1	100.0
Brunswick	1.5	2.9	18.9	5.7	5.3	32.4	5.4	26.2	1.7	100.0
Catawba	0.0	14.0	51.9	5.0	13.5	0.3	3.0	11.7	0.6	100.0

Table D.1-1 (cont.)

Site Name	Percent of Land Cover Type									
	Barren Land	Agriculture	Forest	Developed – High, Medium, Low Density	Developed – Open Space	Wetland	Herbaceous	Open Water	Shrub/ Scrub	Total Percent
Crystal River	0.4	1.9	18.0	3.2	3.5	32.5	1.2	37.9	1.4	100.0
Farley	0.3	29.3	41.1	1.2	3.6	10.1	3.3	2.0	9.0	100.0
Grand Gulf	1.2	6.9	43.7	0.5	3.3	27.5	0.1	12.0	4.9	100.0
Harris	0.3	5.2	67.7	0.9	3.5	2.3	9.5	8.7	2.0	100.0
Hatch	0.5	18.8	41.6	1.5	3.2	19.9	12.2	1.6	0.9	100.0
McGuire	0.1	15.3	35.6	9.1	12.2	1.3	5.2	20.2	0.9	100.0
North Anna	4.0	19.4	55.4	0.6	0.4	3.9	0.0	16.3	0.0	100.0
Oconee	0.8	8.3	52.8	1.4	5.6	0.4	7.9	22.0	0.8	100.0
Robinson	0.0	24.0	31.9	3.3	6.9	8.5	16.5	4.4	4.5	100.0
Sequoyah	0.8	21.7	44.8	3.9	7.5	0.6	3.2	14.2	3.2	100.0
St. Lucie	0.3	0.0	1.9	8.3	7.8	15.6	0.1	65.7	0.1	100.0
Summer	0.6	5.5	60.8	0.6	2.7	2.7	8.6	17.7	0.6	100.0
Surry	1.1	14.8	21.6	1.0	1.2	8.8	0.0	51.6	0.0	100.0
Turkey Point	0.0	2.9	0.0	1.3	1.1	52.5	0.1	41.9	0.2	100.0
Vogtle	0.1	10.1	36.0	1.8	3.1	25.2	19.4	0.8	3.5	100.0
Watts Bar	0.6	26.1	47.0	0.8	4.3	1.7	4.6	9.8	5.2	100.0
Region III										
Arnold	0.0	53.6	13.2	3.5	7.9	9.9	8.8	3.1	0.0	100.0
Braidwood	0.0	47.3	19.2	10.2	6.7	0.3	6.2	10.1	0.0	100.0
Byron	0.1	65.7	19.6	5.4	6.2	0.7	0.2	2.1	0.0	100.0
Callaway	0.2	26.7	64.1	0.8	2.5	2.2	2.1	1.2	0.1	100.0
Clinton	0.0	72.6	11.3	2.7	3.6	0.0	0.9	8.9	0.0	100.0

Table D.1-1 (cont.)

Site Name	Percent of Land Cover Type									
	Barren Land	Agriculture	Forest	Developed – High, Medium, Low Density	Developed – Open Space	Wetland	Herbaceous	Open Water	Shrub/ Scrub	Total Percent
Cook	0.9	20.2	8.8	7.5	7.7	2.8	2.2	49.9	0.1	100.0
Davis Besse	0.1	25.5	0.4	2.5	2.8	13.4	0.6	54.6	0.0	100.0
Dresden	0.1	30.7	15.3	12.3	6.5	4.4	17.0	13.7	0.0	100.0
Fermi	1.6	29.9	2.3	8.0	1.0	4.1	1.3	51.8	0.0	100.0
Kewaunee	0.4	40.9	1.4	2.4	0.6	5.3	2.1	46.6	0.3	100.0
LaSalle	0.1	72.1	11.4	3.6	4.0	0.4	3.4	5.0	0.0	100.0
Monticello	0.0	52.0	18.2	6.0	7.9	4.5	3.8	6.2	1.4	100.0
Palisades	1.1	10.0	16.3	3.2	4.8	9.8	6.1	48.2	0.4	100.0
Perry	0.0	11.8	13.7	12.8	10.7	0.6	1.5	48.8	0.1	100.0
Point Beach	0.5	39.4	1.2	2.0	1.2	8.7	1.5	45.3	0.3	100.0
Prairie Island	0.0	30.3	24.5	2.7	6.5	17.6	3.8	14.3	0.1	100.0
Quad Cities	0.2	57.6	7.3	3.6	4.5	15.8	2.2	8.8	0.0	100.0
Region IV										
Arkansas	0.3	22.8	53.5	3.7	3.8	0.3	3.1	11.4	1.0	100.0
Columbia	0.2	4.8	0.2	2.6	1.1	0.3	3.2	5.0	82.5	100.0
Comanche Peak	0.1	4.4	34.8	2.3	6.3	1.6	43.2	7.2	0.0	100.0
Cooper	0.0	71.1	6.7	1.0	5.2	7.7	4.9	3.5	0.0	100.0
Diablo Canyon	0.1	0.0	19.8	0.5	1.8	0.1	7.9	54.0	15.9	100.0
Fort Calhoun	0.1	44.2	8.3	5.6	4.3	8.4	24.8	4.2	0.0	100.0
Palo Verde	0.0	6.2	0.0	1.3	5.3	0.1	3.5	1.1	82.4	100.0
River Bend	1.4	19.6	24.1	2.3	3.2	34.0	3.0	7.6	4.8	100.0
San Onofre	0.3	1.3	1.4	8.7	3.6	0.6	7.6	48.2	28.4	100.0

Table D.1-1 (cont.)

Site Name	Percent of Land Cover Type									
	Barren Land	Agriculture	Forest	Developed – High, Medium, Low Density	Developed – Open Space	Wetland	Herbaceous	Open Water	Shrub/ Scrub	Total Percent
South Texas	0.8	56.4	3.9	1.7	3.9	14.0	1.0	14.1	4.2	100.0
Waterford	0.1	19.3	0.0	15.2	0.3	55.7	0.1	8.6	0.7	100.0
Wolf Creek	0.3	34.1	6.8	3.5	4.1	0.7	36.3	14.0	0.1	100.0
Averages	**0.5**	**23.2**	**24.8**	**4.7**	**4.8**	**9.6**	**4.7**	**23.5**	**4.3**	**100.0**

Source: USGS 2003

1996 GEIS that included a brief survey of the projected and realized visual resource impacts at nuclear power plants; the decommissioning GEIS, which described the range of options between retention and removal of structures; and a review of selected SEISs.

D.2 Air Quality and Noise

D.2.1 Description of Affected Resources and Region of Influence

Similar to most industrial facilities, nuclear power plants and other fuel-cycle facilities generate air pollutants[(a)] and propagate noise. The region of influence of the effects on air quality and noise includes the regulated ambient air environment within and outside each plant site property boundaries, whether open to the public or under various levels of access control. For license renewal, current air and noise pollution levels would remain unchanged, while during refurbishment and decommissioning activities, some additional impacts could occur, particularly on plant property. Some offsite areas at a few plants have a limited region of influence of a few kilometers beyond plant boundaries for measurable air quality impacts and a few hundred meters for noticeable noise impacts. The region of air and noise influences for major source activities can conservatively include downwind areas within a 25 to 50 km radius of the plant for air impacts and 500 m to 1 km from the fence line for noise impacts. The air quality nonattainment status maps presented in this section conservatively show a 50-km radius of influence, which is consistent with major new source regulatory reviews for prevention of significant deterioration (PSD) permits.[(b)] It is not anticipated that construction or refurbishment activities associated with license renewal would involve new major sources of air or noise pollution.

D.2.2 Description of Impact Assessment

Air quality and noise impacts were examined through a review of a select number of SEISs to identify air emission sources that are permitted or have applications for permits during license renewal, as well as the information provided in the 1996 GEIS (NRC 1996) and the decommissioning GEIS (NRC 2002), which addressed impacts for plants that have undergone decommissioning or are in the process of decommissioning. Offsite impacts were assessed based on a survey of all operating nuclear power plants and information in the decommissioning GEIS.

(a) Both radiological and nonradiological (criteria air pollutants) releases are covered in the GEIS. See Appendix F for description of region of influence and the impact assessment for radiological releases.

(b) Any new or modified source with the potential to emit 100 tons per year (TPY) or more of any air pollutant, i.e., particulate matter (PM_{10}), sulfur dioxide (SO_2), nitrogen oxides (NO_x), carbon monoxide (CO), or volatile organic compounds (VOCs).

The following, including figures and tables, provide supplemental data and information in support of the air quality impacts provided in Sections 3.3.1, 3.3.2 and 4.1.1.2.

D.2.2.1 Climatology

Continental U.S. maximum and minimum average annual temperatures from 1971 through 2000 are shown in Figures D.2-1 and D.2-2, respectively. The average annual precipitation over the same period is shown in Figure D.2-3. In the period from August 2002 through August 2007, actual precipitation as a percent of the average monthly precipitation is shown in Figure D.2-4. Drought or near-drought conditions are shown in south-central California east of the San Onofre plant and east and north of the Diablo Canyon plant. Similar drought conditions over this recent 5 year period also appear in limited areas near the Palo Verde plant in Arizona. Above normal annual precipitation (10 to 30 percent above historical averages) in the vicinity of licensed commercial power reactors are shown in large areas of southwestern and south Texas and over much of the northeastern United States.

D.2.2.2 Air Quality

Air quality in all geographical regions of the United States is classified as being either in attainment or nonattainment. The U.S. Environmental Protection Agency (EPA) has the authority to formally designate areas as attainment or nonattainment areas and uses the National Ambient Air Quality Standards (NAAQS) to evaluate an area's attainment status. The pollutants for which the NAAQS have been established are known as criteria pollutants (O_3, PM_{10}, $PM_{2.5}$, NO_2, SO_2, CO, and Pb). If the concentration limit of a pollutant is below the NAAQS, the area will be designated as attainment for that pollutant. An area is deemed in attainment by the EPA when the air quality is monitored and the resultant concentrations are found to be consistently below the NAAQS. Table D.2-1 provides primary (public health, including health of "sensitive" populations) and secondary (public welfare, e.g., protection against vegetation and materials damage, decrease in visibility) NAAQS for each criteria air pollutant. However, if the pollution limits are exceeded for several consecutive years, the EPA will designate an area as nonattainment. The area will subsequently be subject to more stringent new or modified source regulatory requirements.

Areas can be in attainment for some pollutants, while designated as nonattainment for others. Some areas are designated as "maintenance" areas. These are regions that were initially designated as nonattainment or unclassifiable and have since attained compliance with the NAAQS. Some designated nonattainment areas for some pollutants include classifications identifying the level of severity or degree on nonattainment. For example, the new 8-hr ozone standard has six separate classification levels, ranging from "marginal" to "extreme," as

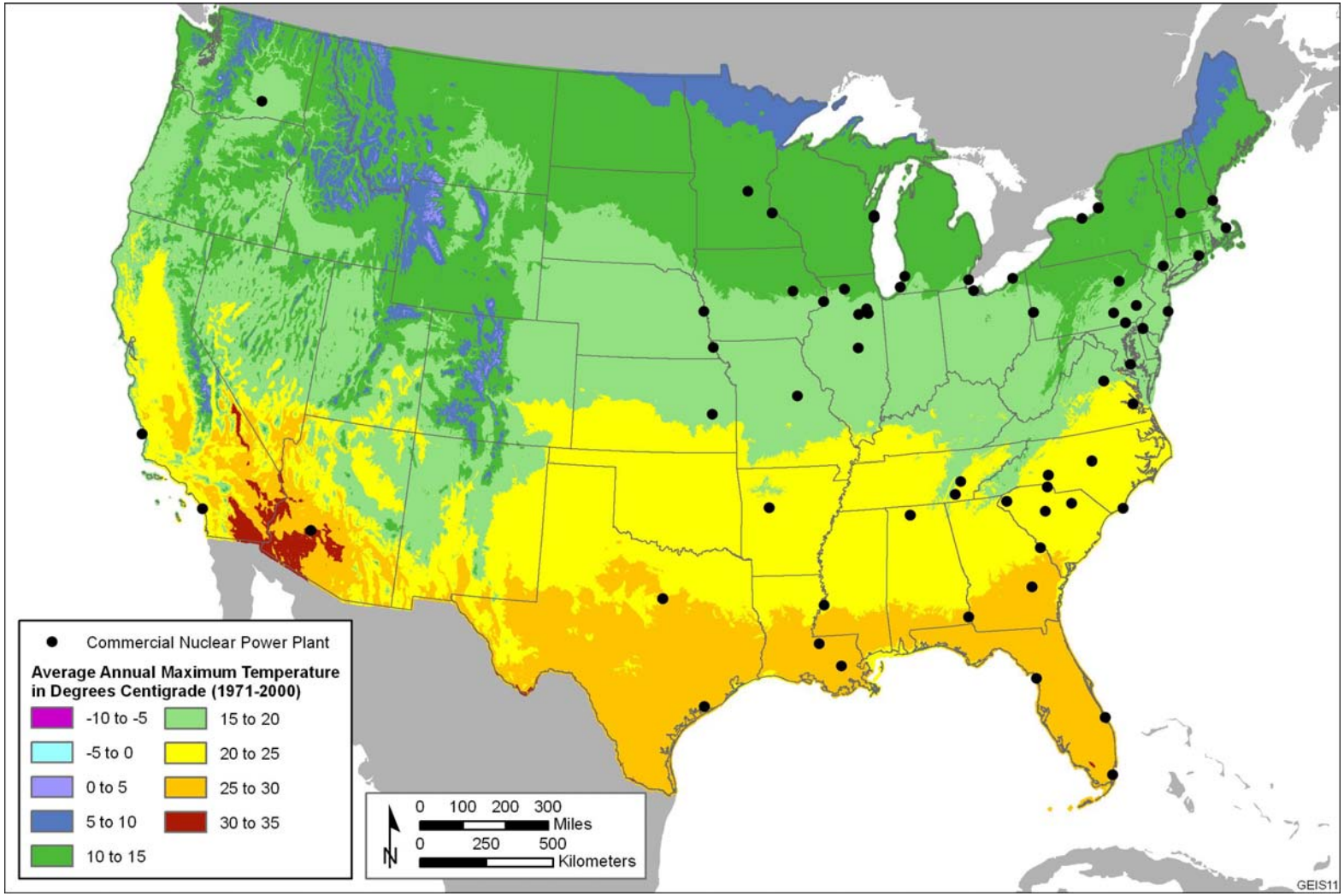

Figure D.2-1. Average Annual Maximum Temperatures over the Continental United States (1971–2000)
(Source: Permission to use this copyrighted material is granted by PRISM Group, Oregon State University)
Copyright (c) 2007, PRISM Climate Group, Oregon State University, http://www.prismclimate.org. Map created December 11, 2007

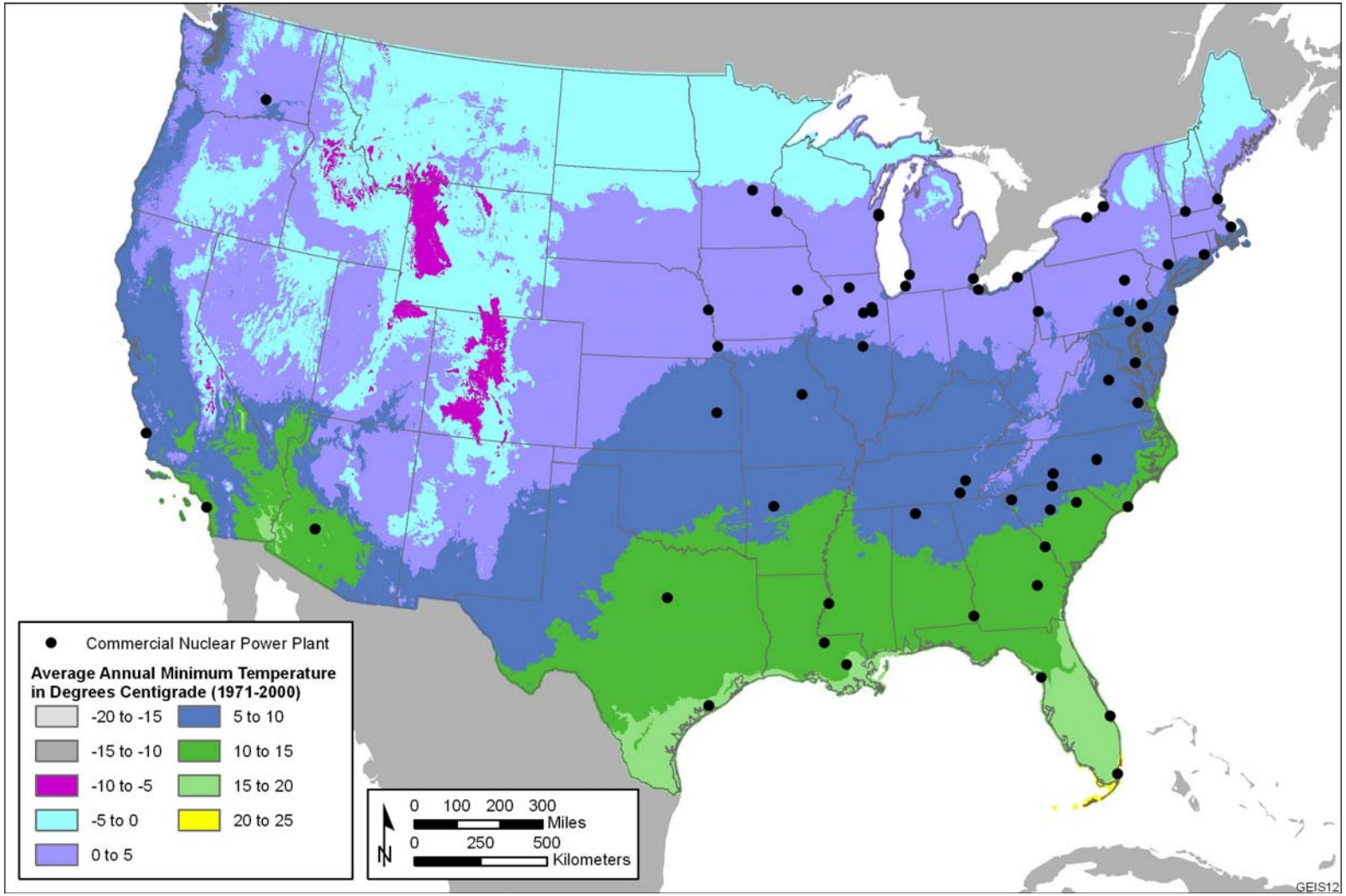

Figure D.2-2. Average Annual Minimum Temperatures over the Continental United States (1971–2000)
(Source: Permission to use this copyrighted material is granted by PRISM Group, Oregon State University)
Copyright (c) 2007, PRISM Climate Group, Oregon State University, http://www.prismclimate.org. Map created December 11, 2007

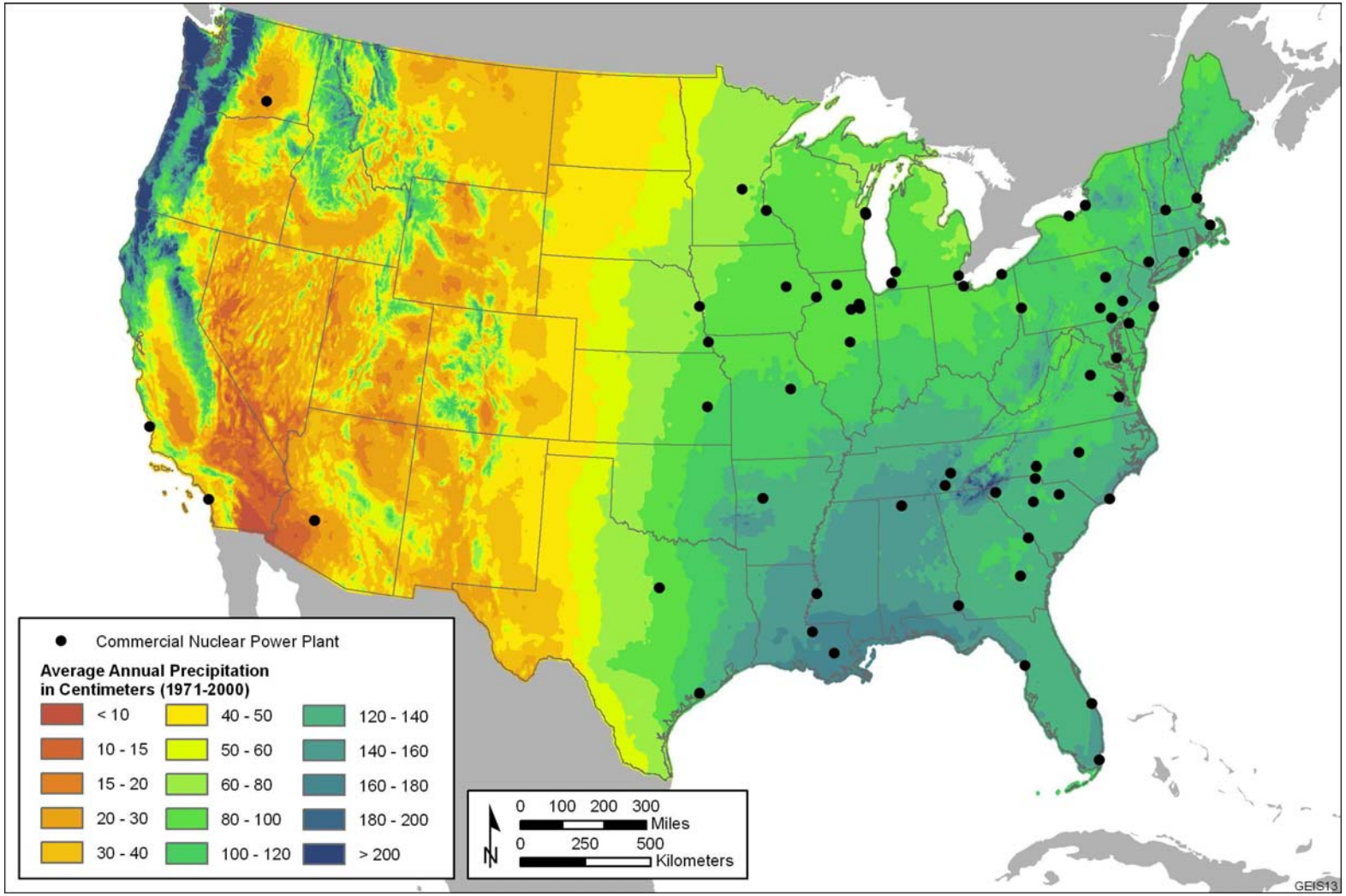

Figure D.2-3. Average Annual Precipitation over the Continental United States (1971–2000)
(Source: Permission to use this copyrighted material is granted by PRISM Group, Oregon State University)
Copyright (c) 2007, PRISM Climate Group, Oregon State University, http://www.prismclimate.org. Map created December 11, 2007

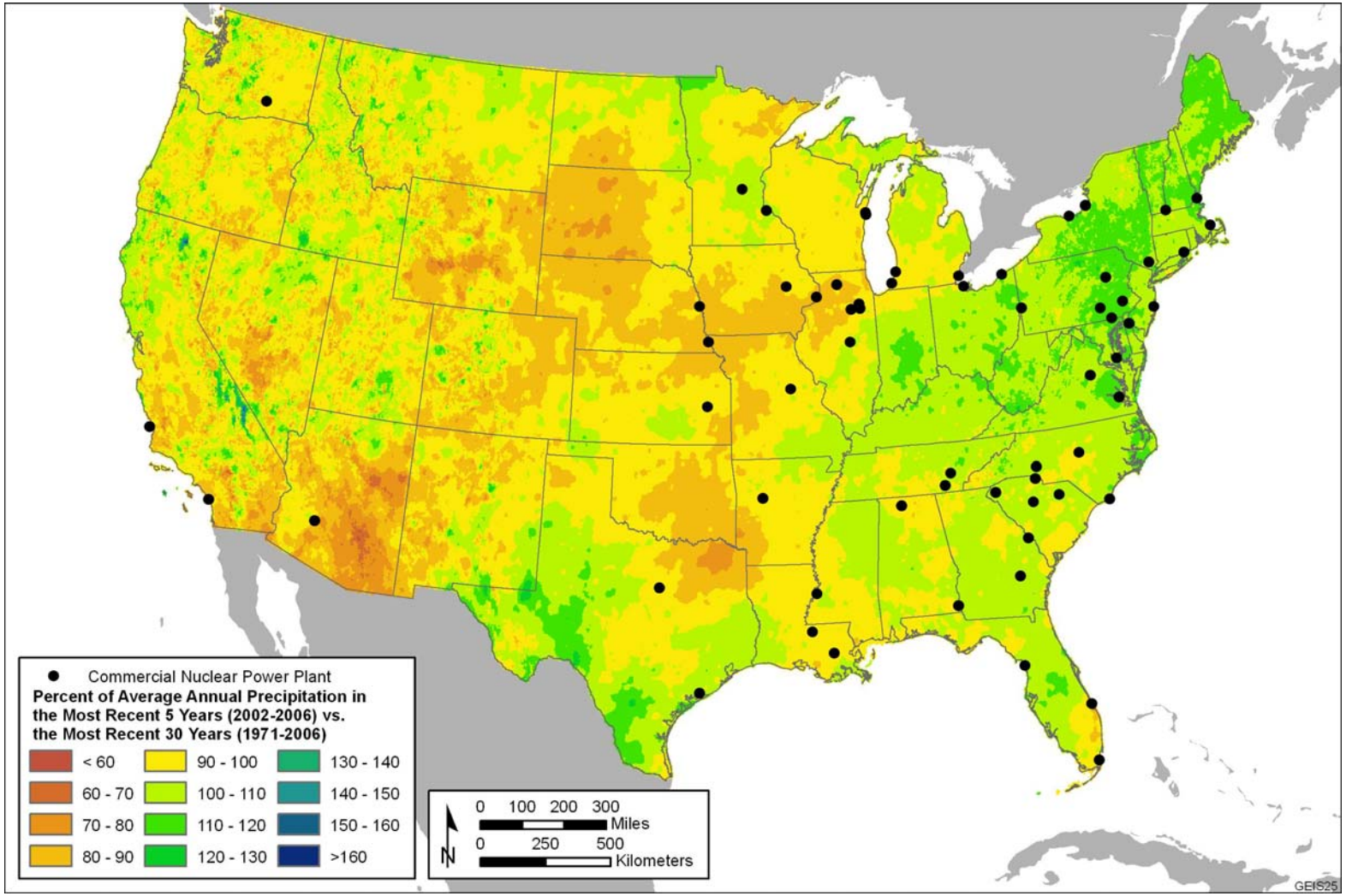

Figure D.2-4. Percent of Average Monthly Precipitation over the Past 5 Years (September 2002–August 2007) vs. the Past 30 Years

(Source: Permission to use this copyrighted material is granted by PRISM Group, Oregon State University)

Copyright (c) 2007, PRISM Climate Group, Oregon State University, http://www.prismclimate.org. Map created December 11, 2007

Table D.2-1. National Ambient Air Quality Standards (NAAQS)

Pollutant	Standard Value (ppm)	Standard Value (mg/m^3)	Standard Type
Ozone (O_3)			
Maximum daily 8-hour average[(a)]	0.08	157	Primary and secondary
Maximum daily 1-hour average[(b)]	0.12	235	Primary and secondary
Particulate matter <10 micrometers (PM_{10})			
Annual arithmetic mean	Revoked[(c)]		
24-hour average[(d)]		150	Primary and secondary
Particulate matter <2.5 micrometers ($PM_{2.5}$)			
Annual arithmetic mean[(e)]		15	Primary and secondary
24-hour average[(f)]		65	Primary and secondary
Nitrogen dioxide (NO_2)			
Annual arithmetic mean	0.053	100	Primary and secondary
Sulfur dioxide (SO_2)			
Annual arithmetic mean	0.03	80	Primary
24-hour average[(g)]	0.14	365	Primary
3-hour average[(g)]	0.5	1300	Secondary
Carbon monoxide (CO)			
8-hour average[(g)]	9	10	Primary
1-hour average[(g)]	35	40	Primary
Lead (Pb)			
Maximum quarterly average		1.5	Primary and secondary

(a) To attain this standard, the 3-year average of the fourth-highest daily maximum 8-hour average ozone concentrations measured at each monitor within an area over each year must not exceed 0.08 ppm.
(b) The standard is attained when the expected number of days per calendar year with maximum hourly average concentrations above 0.12 ppm is <1, as determined by Appendix H in 40 CFR Part 50. As of June 15, 2005, EPA revoked the 1-hour ozone standard in all areas except the fourteen 8-hour ozone nonattainment Early Action Compact Areas.
(c) Due to a lack of evidence linking health problems to long-term exposure to coarse particle pollution, the EPA revoked the annual PM_{10} standard in 2006 (effective December 17, 2006).
(d) Not to be exceeded more than once per year on average over 3 years.
(e) To attain this standard, the 3-year average of the weighted annual mean $PM_{2.5}$ concentrations from single or multiple community-oriented monitors must not exceed 15.0 $\mu g/m^3$.
(f) To attain this standard, the 3-year average of the 98th percentile of 24-hour concentrations at each population-oriented monitor within an area must not exceed 35 $\mu g/m^3$ (effective December 17, 2006).
(g) Not to be exceeded more than once per year.

indicated ion the footnote below.[a] The table (Table D.2-1) and figures (Figures D.2-5 through D.2-11) presented in this section cover only the currently designated nonattainment areas and do not show the nonattainment classification levels. Further details on the nonattainment designations, including the classification levels, can be found in EPA's "Green Book" (http://www.epa.gov/airprogm/oar/oaqps/greenbk/index.html).

To be reclassified from nonattainment to an attainment maintenance area, the Clean Air Act outlines several conditions that must be met, one of which is the development and EPA-approval of a maintenance plan. Other conditions that States must meet before an area may be redesignated by the EPA include: (1) the area has monitored attainment of the air quality standard; (2) the EPA has determined that the improvement in air quality is due to permanent and enforceable reductions in emissions; (3) the State has submitted and EPA has approved, a maintenance plan for the area; and (4) the area has met all other applicable Clean Air Act requirements. The EPA may approve or deny the redesignation request based on air monitoring information, the activities listed in the State Implementation Plan and the comments submitted by the public.

The maintenance plan must demonstrate continued compliance, considering projected growth, for a period of ten years. If outdoor air monitors record a violation of the standard, the maintenance plan must include a commitment to determine appropriate measures to address the cause of the violation. This plan must specify measures that will be used in the area to maintain compliance with the NAAQS. The plan must include controls the area will employ to ensure emissions remain below certain levels and contingency measures to ensure prompt correction of any NAAQS violations. The NRC will ensure coordination of licensee with the appropriate EPA Regional Office and/or State air quality office before any plants begin major construction or refurbishment activities.

(a) Extreme – Area has a design value of 0.187 ppm and above. Severe 17 – Area has a design value of 0.127 up to but not including 0.187 ppm. Severe 15 – Area has a design value of 0.120 up to but not including 0.127 ppm. Serious – Area has a design value of 0.107 up to but not including 0.120 ppm. Moderate – Area has a design value of 0.092 up to but not including 0.107 ppm. Marginal – Area has a design value of 0.085 up to but not including 0.092 ppm.

Figure D.2-5. Map A – Northwest Area NAAQS Attainment Status (no nonattainment areas within region of influence)

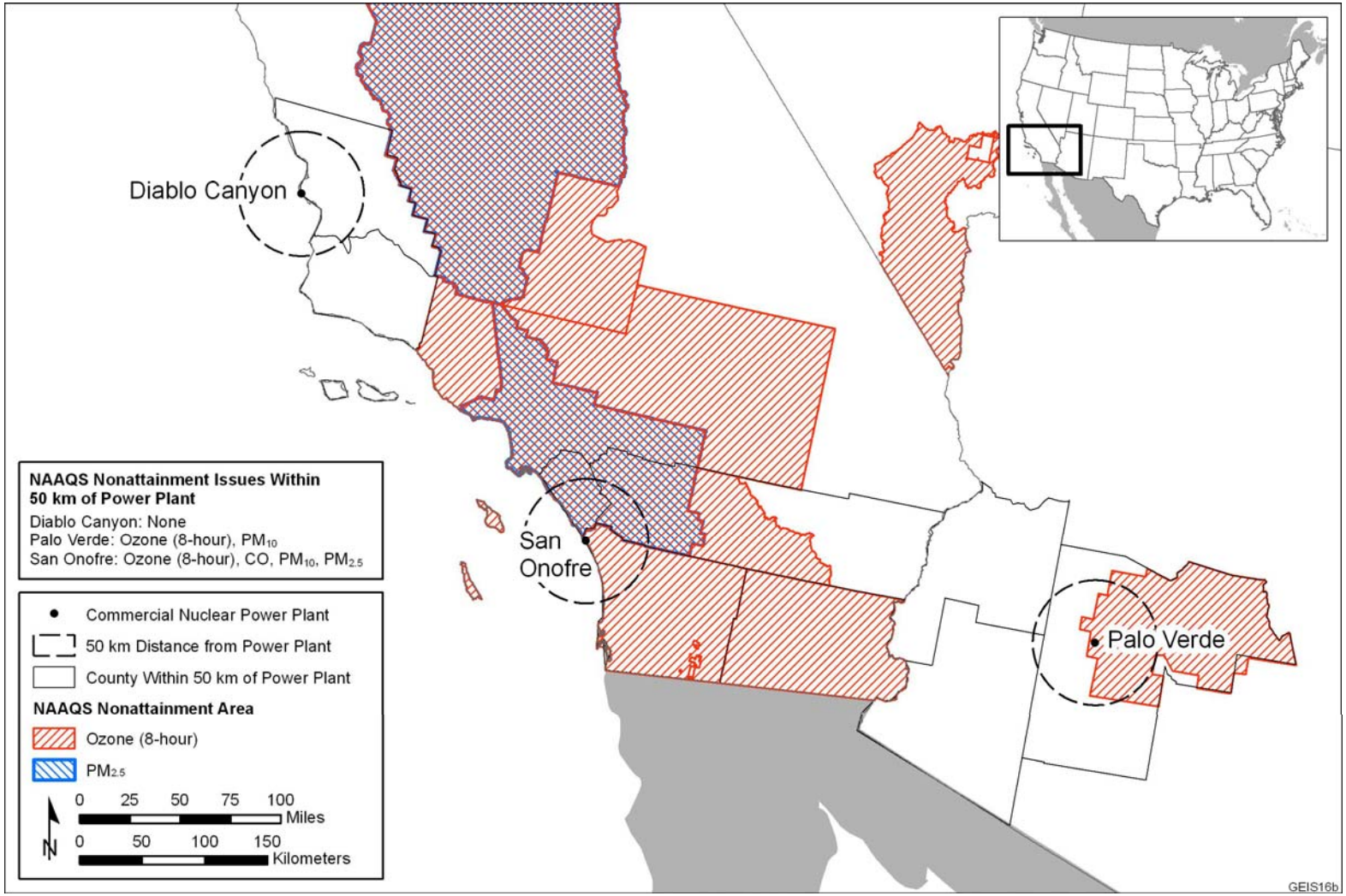

Figure D.2-6. Map B – Southwest Area NAAQS Attainment Status (O_3 and $PM_{2.5}$ designated areas are shown)

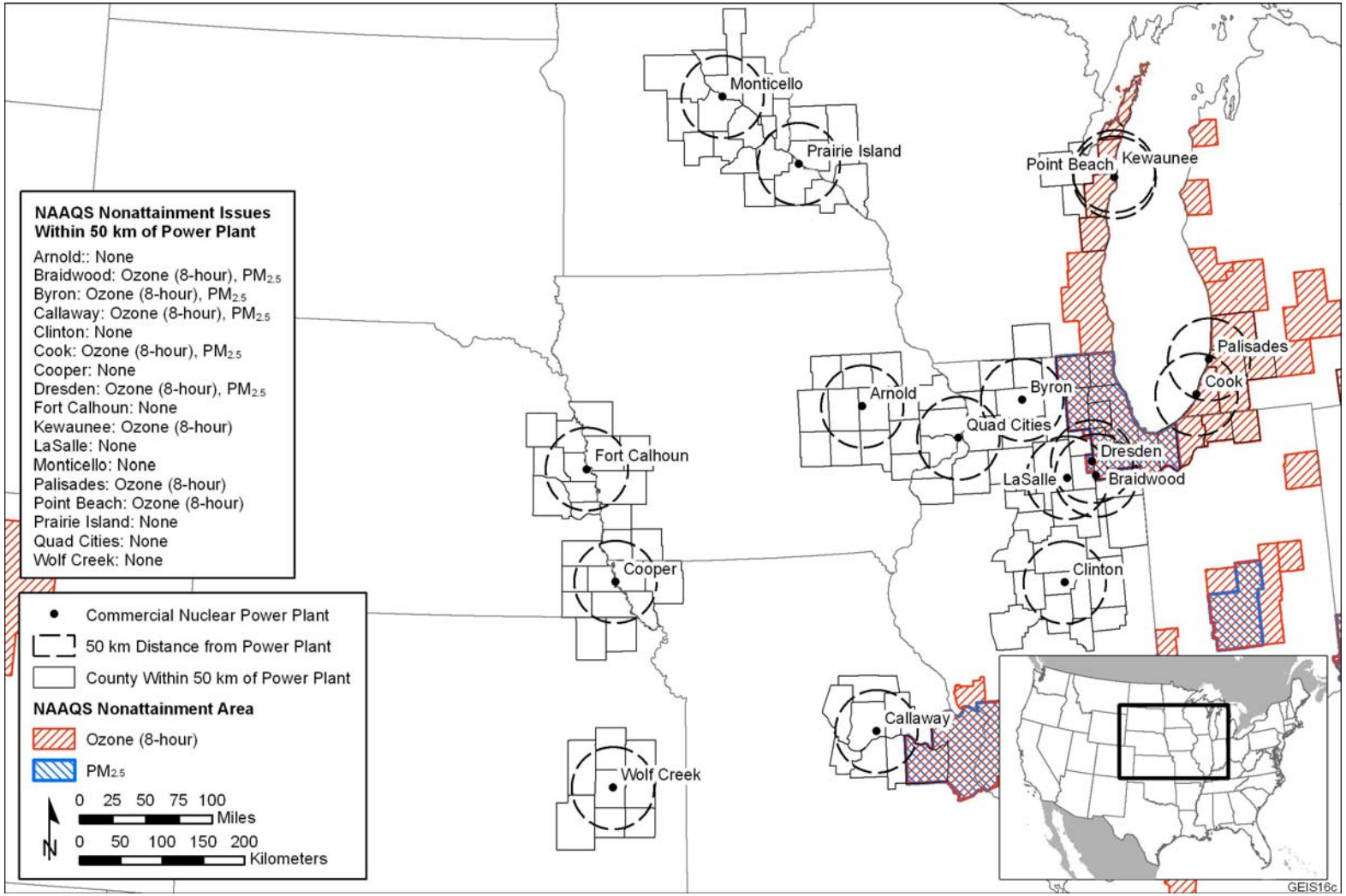

Figure D.2-7. Map C – Midwest Area NAAQS Attainment Status (O_3 and $PM_{2.5}$ designated areas are shown)

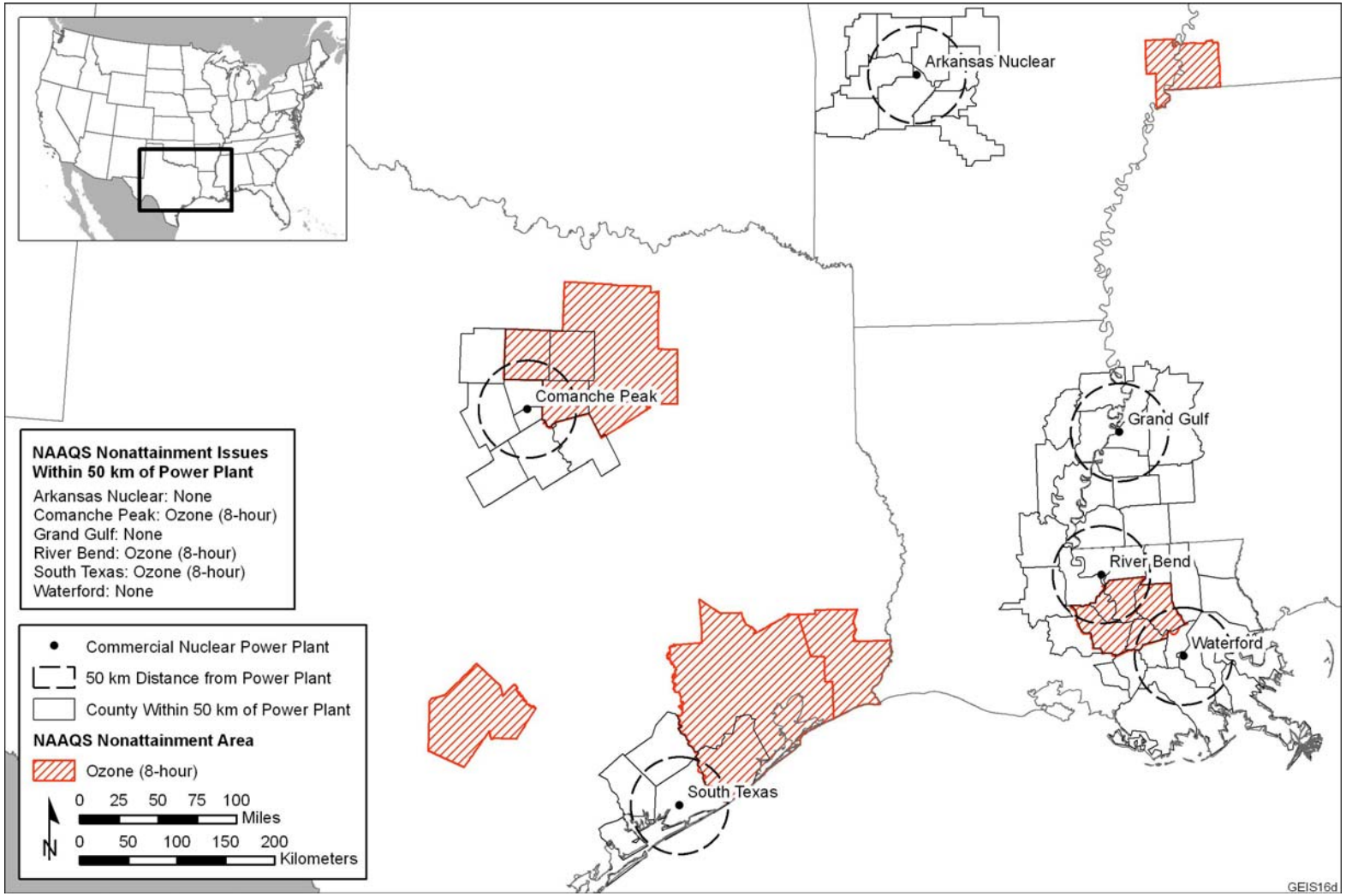

Figure D.2-8. Map D – South Area NAAQS Attainment Status (O_3 designated areas are shown; no $PM_{2.5}$ areas)

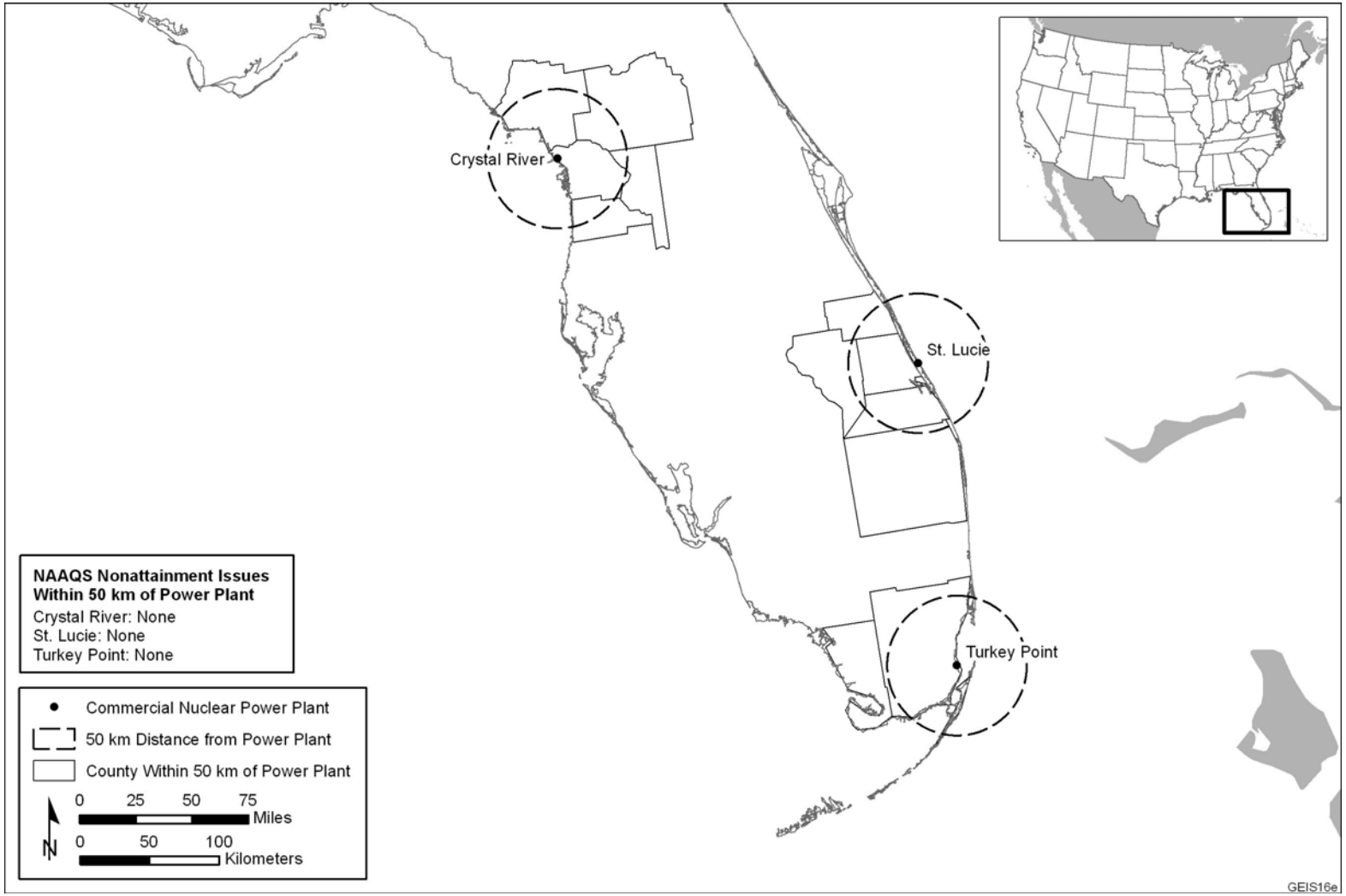

Figure D.2-9. Map E – Florida Area NAAQS Attainment Status (no nonattainment areas within region of influence)

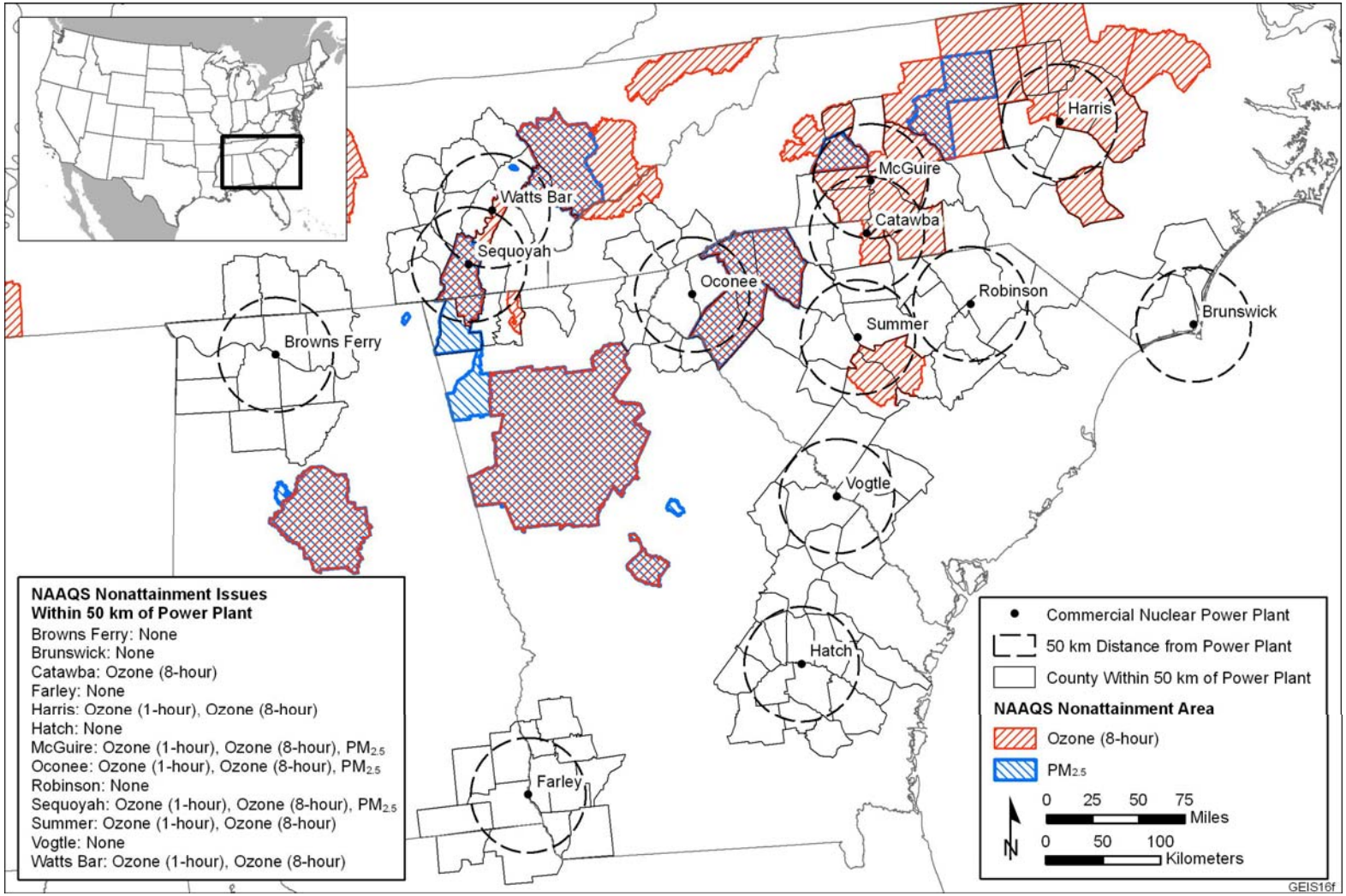

Figure D.2-10. Map F – Southeast Area NAAQS Attainment Status (O_3 and $PM_{2.5}$ designated areas are shown)

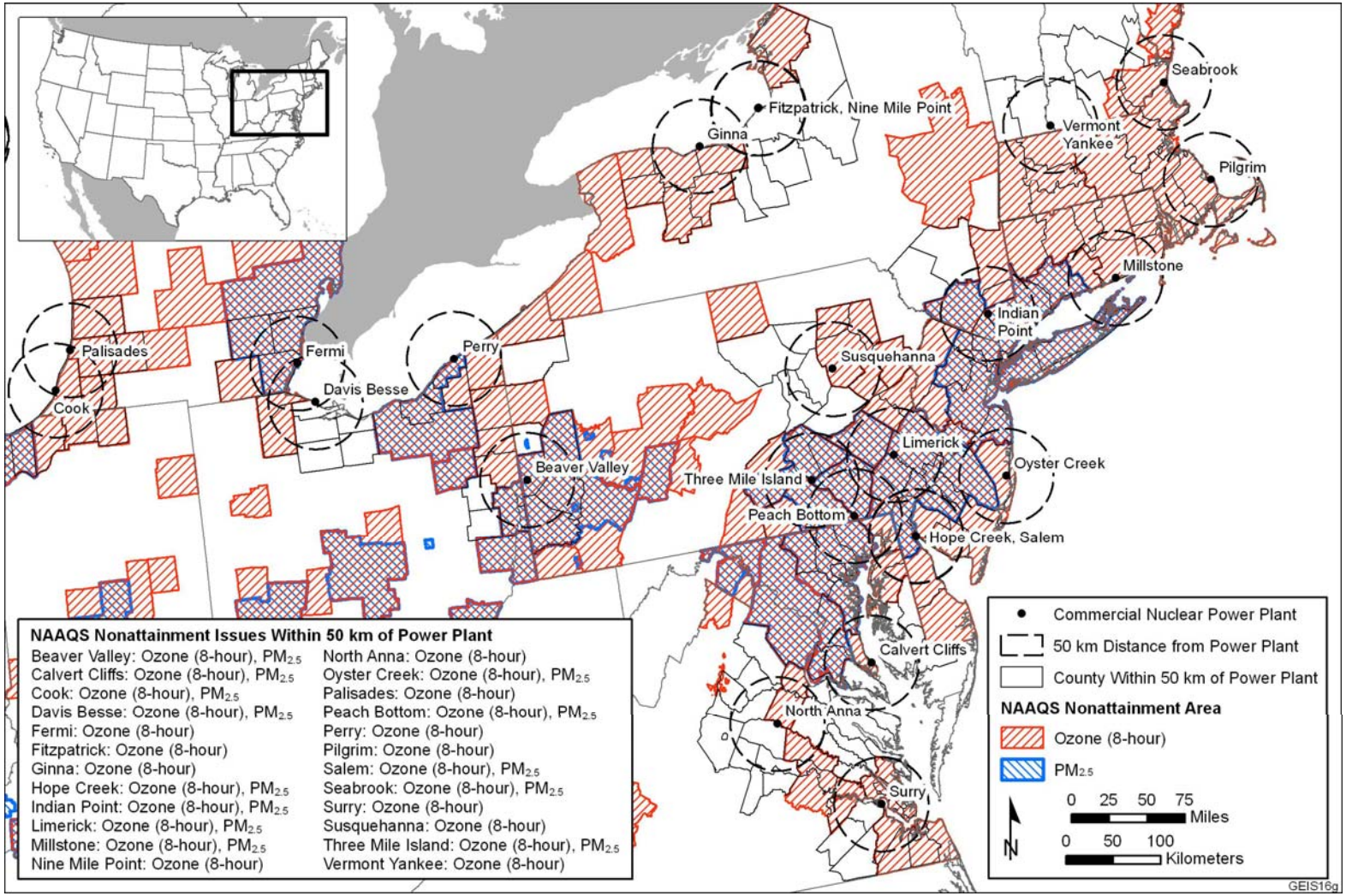

Figure D.2-11. Map G – Northeast Area NAAQS Attainment Status (O_3 and $PM_{2.5}$ designated areas are shown)

Table D.2-2. Summary of Nonattainment Status for Each Operating Commercial Plant

Nuclear Power Plant Name/Map Area	Plant County	State	Pollutants	Nonattainment Status	Distance (km) to Nearest Nonattainment Area (County)
Map A: Northwest[a]					
Columbia	Benton	WA	All pollutants	All attainment	NA[b]
Map B: Southwest[a]					
Diablo Canyon Units 1, 2	San Luis Obispo	CA	All pollutants	All attainment	NA
San Onofre Units 2, 3	San Diego	CA	Ozone 8-hour	Within nonattainment county	San Diego
			CO	Nonattainment	<1, Orange
			PM_{10}	Nonattainment	<1, Orange
			$PM_{2.5}$	Nonattainment	<1, Orange
Palo Verde Units 1, 2, 3	Maricopa	AZ	Ozone 8-hour	Within nonattainment county	0, Maricopa
			PM_{10}	Within nonattainment county	0, Maricopa
Map C: Midwest[a]					
Fort Calhoun	Washington	IA	All pollutants	All attainment	NA
Duane Arnold Unit 1	Linn	IA	All pollutants	All attainment	NA
Quad Cities Unit 1, 2	Rock Island	IL	All pollutants	All attainment	NA
Clinton	DeWitt	IL	All pollutants	All attainment	NA
Braidwood Units 1, 2	Will	IL	Ozone 8-hour	Within nonattainment county	0, Will
			$PM_{2.5}$	Within nonattainment county	0, Will
Dresden Units 2, 3	Grundy	IL	Ozone 8-hour	Within nonattainment county	0, Grundy
			$PM_{2.5}$	Within nonattainment county	0, Grundy
LaSalle Units 1, 2	LaSalle	IL	All pollutants	All attainment	NA
Byron Units 1, 2	Ogle	IL	Ozone 8-hour	Nonattainment	<50, McHenry
			$PM_{2.5}$	Nonattainment	<50, McHenry

Table D.2-2. (cont.)

Nuclear Power Plant Name/Map Area	Plant County	State	Pollutants	Nonattainment Status	Distance (km) to Nearest Nonattainment Area (County)
Wolf Creek 1	Coffey	KS	All pollutants	All attainment	NA
Palisades	Van Buren	MI	Ozone 8-hour	Within nonattainment county	0, Van Buren
D.C. Cook Units 1, 2	Cook	MI	Ozone 8-hour	Within nonattainment county	0, Cook
			$PM_{2.5}$	Nonattainment	<45, Porter
Prairie Island Units 1, 2	Goodhue	MN	All pollutants	All attainment	NA
Monticello	Wright	MN	All pollutants	All attainment	NA
Callaway	Callaway	MO	Ozone 8-hour	Nonattainment	<35, Franklin
			$PM_{2.5}$	Nonattainment	<35, Franklin
Cooper	Nemaha	NE	All pollutants	All attainment	NA
Point Beach Units 1, 2	Manitowoc	WI	Ozone 8-hour	Within nonattainment county	0, Manitowoc
Kewaunee	Kewaunee	WI	Ozone 8-hour	Within nonattainment county	0, Kewaunee
Map D: South[(a)]					
Arkansas Nuclear 1, 2	Yell	AR	All pollutants	All attainment	NA
River Bend Unit 1	West Feliciana	LA	Ozone 8-hour	Nonattainment	<12, East Baton Rouge
Waterford Unit 3	St. Charles	LA	All pollutants	All attainment	NA
Grand Gulf Unit 1	Claiborne	MS	All pollutants	All attainment	NA
South Texas 1, 2	Matagorda	TX	Ozone 8-hour	Nonattainment	<36, Brazoria
Comanche Peak 1, 2	Hood and Somervell	TX	Ozone 8-hour	Nonattainment	<36, Johnson
Map E: Florida[(a)]					
Crystal River 3	Citrus	FL	All pollutants	All attainment	NA
St. Lucie Units 1, 2	St. Lucie	FL	All pollutants	All attainment	NA
Turkey Point 3, 4	Dade	FL	All pollutants	All attainment	NA

Table D.2-2. (cont.)

Nuclear Power Plant Name/Map Area	Plant County	State	Pollutants	Nonattainment Status	Distance (km) to Nearest Nonattainment Area (County)
Map F: Southeast[a]					
Browns Ferry 1, 2, 3	Lawrence	AL	All pollutants	All attainment	NA
Farley Units 1, 2	Houston	AL	All pollutants	All attainment	NA
Hatch Units 1, 2	Appling	GA	All pollutants	All attainment	NA
Vogtle Units 1, 2	Burke	GA	All pollutants	All attainment	NA
Brunswick Units 1, 2	Brunswick	NC	All pollutants	All attainment	NA
McGuire Units 1, 2	Mecklenburg	NC	Ozone 1-hour	Nonattainment	<12, Catawba
			Ozone 8-hour	Within nonattainment county	Mecklenburg
			$PM_{2.5}$	Nonattainment	<12, Catawba
Harris Unit 1	Wake	NC	Ozone 1-hour	Nonattainment	<36, Alamance
			Ozone 8-hour	Within nonattainment county	0, Wake
Robinson Unit 2	Darlington/ Chesterfield	SC	All pollutants	All attainment	NA
Summer Unit 1	Fairfield	SC	Ozone 1-hour	Nonattainment	<8, Richland
			Ozone 8-hour	Nonattainment	<8, Richland
Catawba Units 1, 2	York	SC	Ozone 8-hour	Within nonattainment county	0, York
Oconee Units 1, 2, 3	Oconee	SC	Ozone 1-hour	Nonattainment	<19, Anderson
			Ozone 8-hour	Nonattainment	<19, Anderson
			$PM_{2.5}$	Nonattainment	<19, Anderson
Sequoyah Units 1, 2	Hamilton	TN	Ozone 1-hour	Within nonattainment county	0, Hamilton
			Ozone 8-hour	Within nonattainment county	0, Hamilton
			$PM_{2.5}$	Within nonattainment county	0, Hamilton

Table D.2-2. (cont.)

Nuclear Power Plant Name/Map Area	Plant County	State	Pollutants	Nonattainment Status	Distance (km) to Nearest Nonattainment Area (County)
Watts Bar Unit 1	Rhea	TN	Ozone 1-hour	Nonattainment	<1, Meigs
			Ozone 8-hour	Nonattainment	<1, Meigs
Map G: Northeast[(a)]					
Millstone Units 2, 3	New London	CT	Ozone 8-hour	Within nonattainment county	New London
			$PM_{2.5}$	Nonattainment	<36, New Haven
Fermi Unit 2	Monroe	MI	Ozone 8-hour	Within nonattainment county	Monroe
Perry Unit 1	Lake	OH	Ozone 8-hour	Within nonattainment county	Lake
Davis Besse Unit 1	Ottawa	OH	Ozone 8-hour	Nonattainment	<7, Lucas
			$PM_{2.5}$	Nonattainment	<32, Monroe (MI)
Pilgrim Unit 1	Plymouth	MA	Ozone 8-hour	Within nonattainment county	0, Plymouth
Seabrook Unit 1	Rockingham	NH	Ozone 8-hour	Within nonattainment county	0, Rockingham
			$PM_{2.5}$	Within nonattainment county	0, Rockingham
Hope Creek Unit 1	Salem	NJ	Ozone 8-hour	Within nonattainment county	0, Salem
			$PM_{2.5}$	Nonattainment	<3, New Castle (DE)
Salem Units 1, 2	Salem	NJ	Ozone 8-hour	Within nonattainment county	0, Salem
			$PM_{2.5}$	Nonattainment	<3, New Castle(DE)
Oyster Creek	Ocean	NJ	Ozone 8-hour	Within nonattainment county	0, Ocean
			$PM_{2.5}$	Nonattainment	<17, Burlington CO
Calvert Cliffs Units 1, 2	Calvert	MD	Ozone 8-hour	Within nonattainment county	0, Calvert
			$PM_{2.5}$	Nonattainment	<30, Charles (MD)
Nine Mile Point Units 1, 2	Oswego	NY	Ozone -8-hour	Nonattainment	<24, Jefferson
FitzPatrick	Oswego	NY	Ozone 8-hour	Nonattainment	<24, Jefferson

Table D.2-2. (cont.)

Nuclear Power Plant Name/Map Area	Plant County	State	Pollutants	Nonattainment Status	Distance (km) to Nearest Nonattainment Area (County)
Indian Point 2, 3	Westchester	NY	Ozone 8-hour	Within nonattainment county	0, Westchester
			$PM_{2.5}$	Within nonattainment county	0, Westchester
Ginna	Wayne	NY	Ozone 8-hour	Within nonattainment county	0, Wayne
Susquehanna Units 1, 2	Luzerne	PA	Ozone 8-hour	Within nonattainment county	0, Luzerne
Peach Bottom Units 2, 3	York	PA	Ozone 8-hour	Within nonattainment county	0, York
			$PM_{2.5}$	Within nonattainment county	0, York
Beaver Valley 1, 2	Beaver	PA	Ozone 8-hour	Within nonattainment county	0, Beaver
			$PM_{2.5}$	Within nonattainment county	0, Beaver
Three Mile Island	York	PA	Ozone 8-hour	Within nonattainment county	0, York
			$PM_{2.5}$	Within nonattainment county	0, York
Limerick Units 1, 2	Montgomery	PA	Ozone 8-hour	Within nonattainment county	0, Montgomery
			$PM_{2.5}$	Within nonattainment county	0, Montgomery
North Anna Units 1, 2	Louisa	VA	Ozone 8-hour	Nonattainment	<1, Spotsylvania
Surry Units 1, 2	Surry	VA	Ozone 8-hour	Nonattainment	<3, Isle of Wight
Vermont Yankee	Windham/ Vermont	VT, NH	Ozone 8-hour	Nonattainment	<6, Franklin (MA)

(a) Map A – see figure D.2-5; Map B – see Figure D.2-6; Map C – see Figure D.2-7; Map D – see Figure D.2-8; Map E – see Figure D.2-9; Map F – see Figure D.2-10; Map G – see Figure D.2-11.
(b) NA = not applicable.

The air quality attainment status for each licensed nuclear plant is given in Table D.2-2,[(a)] which shows the name of the power plants as well as counties and states where they are located. The nonattainment column indicates the nonattainment status for each criteria air pollutant. In cases when the power plant is located in an attainment area, but within 50 km of a nonattainment area, the nonattainment county name is provided (in the last column) along with the shortest distance between the power plant and the nonattainment boundary.

Figures D.2-5 through D.2-11 show the power plant locations with designated 8-hour ozone and $PM_{2.5}$ nonattainment areas (if present). Nonattainment areas/counties within 50 km of the plants can be identified in each of the figures. Nationally, for new the 8-hour O_3 and $PM_{2.5}$ standards, a total of 81 areas covering 366 counties are designated nonattainment for ozone and 39 areas covering 208 counties are designated nonattainment for $PM_{2.5}$. Total number of areas and counties, respectively, within 50 km of operating plants are 32 and 120 for O_3 and 20 and 51 for $PM_{2.5}$. The maps in Figures D.2-6 through D.2-12 show the power plant locations relative to designated nonattainment areas for each region.

D.3 Geology and Soils

D.3.1 Description of Affected Resources and Region of Influence

Soil and geologic resources of nuclear power plants were not addressed in the 1996 GEIS, but are included in the GEIS update as affected resources for evaluation. The affected soil resources considered in this report are limited to plant site property boundaries. Because soil disturbance during license renewal could occur in undisturbed and undeveloped areas and could affect future onsite soil productivity for sites in farming regions, the locations of power plants relative to areas of prime farmland were determined.

The region of potentially affected geologic resources considered extends to offsite areas, because the presence of a power plant may restrict extraction operations beyond the site boundaries. Seismic settings of the plants were determined and related to historic earthquake information.

(a) The designated nonattainment areas shown for PM_{10}, CO, SO_2, NO_2, O_3 (1-hr), O_3 (8-hr), and $PM_{2.5}$ were prepared from a geographic information system (GIS) database provided by the EPA (2007a). The O_3 (8-hr) and $PM_{2.5}$ designated areas are from the agency's final current status database as of August 2007. The other criteria pollutant maps are drafts being reviewed by EPA Regional Offices as of October 2007. Since nonattainment status designations can change (e.g., nonattainment to attainment, serious to moderate) over time, the EPA "Green Book" Web site (http://www.epa.gov/airprogm/oar/oaqps/greenbk/index.html) and the *Federal Register* links provided on it should be checked to determine the current status.

D.3.2 Description of Impact Assessment

Soils resources onsite could be affected by construction or refurbishment projects during a plant's license renewal phase or during plant decommissioning. These actions would include activities that disturb soil, resulting in erosion, loss of soil resources, and increased suspended solids in nearby surface water bodies.

All published SEISs were reviewed for new and significant information pertaining to soil or geologic impacts, but none was noted. The potential impacts to site soil were addressed generally for possible construction, refurbishment, and decommissioning activities. The impact of license renewal or decommissioning on onsite soils and local geologic resources would depend on site-specific factors such as facility location, construction planning, and site-specific resource mapping. These factors are anticipated to have minimal impact on onsite soils (due to best management practices) or on local geologic resources, so a Category 1 designation was given for this new issue.

D.4 Hydrology

D.4.1 Description of Affected Resources and Region of Influence

Most of the nuclear power plants are located near significant surface water bodies that are either natural or man-made. The surface water assessed as the affected environment is therefore onsite, downstream of the site (in the case of river settings), or throughout some portion of a body of water (in the case of an ocean, lake or Great Lake, bay, reservoir, or pond) adjacent to the site. The region of influence for groundwater impacts included areas both onsite (local water table) and offsite (regional aquifer).

D.4.2 Description of Impact Assessment

Sources of information about surface-water and groundwater issues regarding water use, water conflicts, and water quality included the 1996 GEIS, plant-specific SEISs, and the decommissioning GEIS update (NRC 2002). All published SEISs were reviewed for new and significant information pertaining to water issues.

To analyze the condenser flow rate requirements and consumptive loss associated with specific categories of cooling system technologies (see Section 3.5.1.1), data from the 1996 GEIS and a U.S. Geological Survey report were compiled. The flow rates and consumptive loss rates were normalized to a specific power capacity to allow comparisons.

Permitting requirements related to surface water withdrawal and groundwater use were summarized, and recent information was reviewed to assess water use conflicts and drought effects on rivers.

Several new water issues were considered in this GEIS revision: (1) effects of dredging on water quality, (2) groundwater and soil contamination, and (3) radionuclide releases to groundwater. The impacts of dredging were addressed by reviewing information on dredging operations and permitting requirements in recent SEISs. The effects of general groundwater and soil contamination stemming from spills, leaks, and general industrial practices at power plants were evaluated through review of plant-specific SEISs and supporting documents. The impacts of radionuclide leaks, particularly tritium, were summarized based on a recent NRC summary report of tritium incidents (NRC 2006). A related document by the nuclear industry (NEI 2007) pertaining to assessment and monitoring was also reviewed.

D.5 Ecological Resources

D.5.1 Description of Affected Resources and Region of Influence

Terrestrial resources potentially affected by nuclear power plant operations during the license renewal term were determined at a broad level by obtaining the Level III ecoregion data (EPA 2007b) (Table D.5-1) and land cover data (USGS 2003) for the vicinity of each power plant. An ecoregion describes a broad landscape in which the ecosystems have a general similarity. It can be characterized by the spatial pattern and composition of biotic and abiotic features, such as vegetation, wildlife, physiography, climate, soils, and hydrology (CEC 1997). The Level I ecoregions of the United States in which the nuclear power plants are located are shown in Figure D.5-1. Each ecoregion is subdivided into subregions. Level III ecoregions range from the warm, arid Sonoran Basin and Range ecoregion with cactus-shrub habitats, in which the Palo Verde plant in Arizona is located, to the cool, moist Northeastern Highlands ecoregion with northern hardwood and spruce-fir forests, which contains the Indian Point plant in New York. Level III ecoregions in the vicinity of the operating nuclear plants are presented in Table D.5-2. The region of influence for each power plant was considered to be the area within a radius of 5 mi as well as the transmission line ROWs associated with each power plant.

In the vicinity of the nuclear plants, an average of 25 percent of the land area is forested, 5 percent is grassland, and 4 percent is shrubland, as determined from land cover data. The land area around 10 plants is mostly forested (exceeding 50 percent of the land cover), and around 2 plants, it is mostly shrubland. (For no plants is it mostly grassland.) Agricultural lands are also present in the vicinity of many of the nuclear plants. An average of 23 percent of the area around all plants is used for crop production, and the area around 9 nuclear plants is mostly agricultural (greater than 30 percent land cover). Wetland types within 5 mi of each

Table D.5-1. Level I Ecoregions and Corresponding Level III Ecoregions That Occur in the Vicinity of U.S. Commercial Nuclear Power Plants

Level I Ecoregion	Level III Ecoregion	Level III Description
Eastern Temperate Forests	Arkansas Valley	Forest, pasture, cropland; bottomland deciduous forest on floodplains
	Atlantic Coastal Pine Barrens	Northeastern oak-pine woodland; marsh, swamp, floodplain forest along tidal rivers, freshwater marsh; agriculture; dunes, barrier islands
	Central Corn Belt Plains	Cropland; tallgrass prairie, oak-hickory forest
	Driftless Area	Agriculture; hardwood forest
	Eastern Great Lakes and Hudson Lowlands	Agriculture; northern hardwood forest
	Erie Drift Plain	Agriculture; maple-beech-birch forest; wetlands
	Huron/Erie Lake Plains	Cropland; oak savanna on dunes/beach ridges, elm-ash swamp, beech forest
	Interior Plateau	Oak-hickory forest, cropland, pasture; bluestem prairie, cedar glades
	Interior River Valleys and Hills	Cropland; pasture; forested valley slopes, bottomland deciduous forest, swamp forest, mixed oak forest, oak-hickory forest
	Middle Atlantic Coastal Plain	Pine forest, swamp, marsh, estuaries; oak, gum, cypress near rivers; cropland; dunes, barrier islands
	Mississippi Alluvial Plain	Cropland; bottomland deciduous forest
	Mississippi Valley Loess Plains	Cropland; oak-hickory forest and oak-hickory-pine forest
	North Central Hardwood Forests	Mosaic of coniferous forest and northern hardwood forest, wetlands and lakes, cropland, pasture
	Northeastern Coastal Zone	Northern hardwood forest, spruce-fir forest, lakes
	Northern Piedmont	Appalachian oak forest, cropland

Table D.5-1. (cont.)

Level I Ecoregion	Level III Ecoregion	Level III Description
	Piedmont	Oak-hickory-pine woodland; cropland
	Ridge and Valley	Appalachian oak forest, oak-hickory-pine forest, agriculture
	S. Michigan/N. Indiana Drift Plains	Lakes, marsh; agriculture; oak-hickory forest, northern swamp forest, beech forest
	Southeastern Plains	Mosaic of cropland, pasture, woodland, mixed forest
	Southeastern Wisconsin Till Plains	Agriculture; mosaic of hardwood forest, oak savanna, tallgrass prairie
	Southern Coastal Plain	Coastal lagoons, marsh, swamp, barrier islands; pine, oak-gum-cypress forest; citrus groves, pasture; lakes
	Western Allegheny Plateau	Mixed mesophytic forest, mixed oak forest; pasture, cropland
Great Plains	Central Irregular Plains	Mosaic of grassland, wide riparian forest; cropland
	Cross Timbers	Rangeland, pasture; little bluestem grassland with scattered oaks
	Western Corn Belt Plains	Cropland, pasture; tallgrass prairie; narrow riparian forest
	Western Gulf Coastal Plain	Grassland, cropland
North American Deserts	Columbia Plateau	Arid sagebrush steppe and grassland; agriculture
	Sonoran Basin and Range	Hot climate; creosote bush-bur sage; large areas of palo verde-cactus shrub and giant saguaro cactus
Mediterranean California	Southern and Central California Chaparral and Oak Woodlands	Mediterranean climate: hot dry summers, cool moist winters

Table D.5-1. (cont.)

Level I Ecoregion	Level III Ecoregion	Level III Description
Northern Forests	Northeastern Highlands	Northern hardwood forest, spruce-fir forest; lakes
Tropical Wet Forests	Southern Florida Coastal Plain	Frost-free climate; flat plains with wet soils; marshland, swamp, everglades, palmetto prairie

Source: EPA 2007b

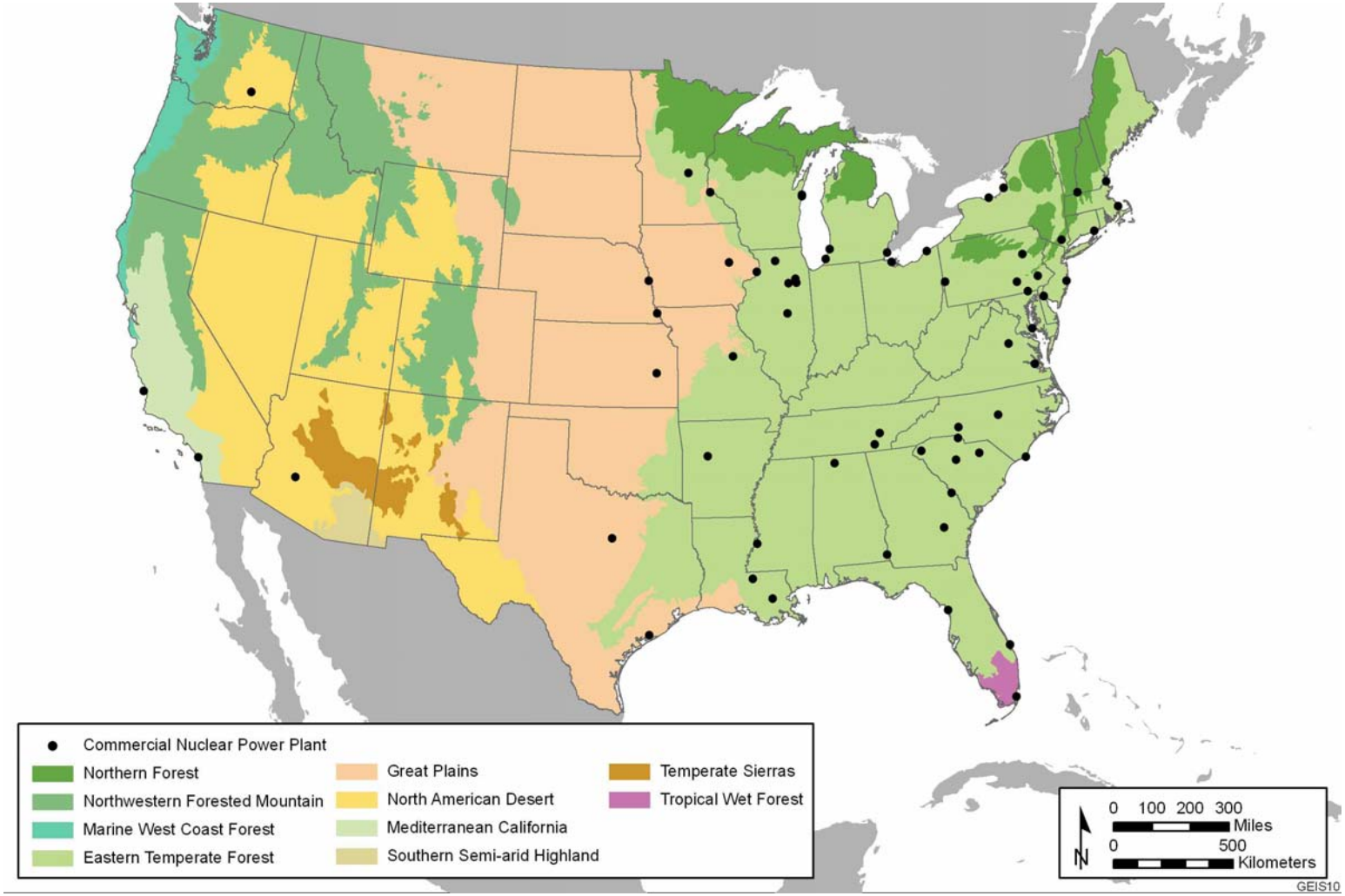

Figure D.5-1. Level I Ecoregions of the United States (CEC 2006)

Table D.5-2. Ecoregions in the Vicinity of Operating Nuclear Power Plants

Site Name	Level I Description	Level III Ecoregion(s)
Arkansas	Eastern Temperate Forests	Arkansas Valley
Beaver Valley	Eastern Temperate Forests	Western Allegheny Plateau
Braidwood	Eastern Temperate Forests	Central Corn Belt Plains
Browns Ferry	Eastern Temperate Forests	Interior Plateau
Brunswick	Eastern Temperate Forests	Middle Atlantic Coastal Plain
Byron	Eastern Temperate Forests	Central Corn Belt Plains
Callaway	Eastern Temperate Forests	Interior River Valleys and Hills
Calvert Cliffs	Eastern Temperate Forests	Southeastern Plains, Middle Atlantic Coastal Plain
Catawba	Eastern Temperate Forests	Piedmont
Clinton	Eastern Temperate Forests	Central Corn Belt Plains
Columbia	North American Deserts	Columbia Plateau
Comanche Peak	Great Plains	Cross Timbers
Cooper	Great Plains	Western Corn Belt Plains
Crystal River	Eastern Temperate Forests	Southern Coastal Plain
D.C. Cook	Eastern Temperate Forests	S. Michigan/N. Indiana Drift Plains
Davis Besse	Eastern Temperate Forests	Huron/Erie Lake Plains
Diablo Canyon	Mediterranean California	Southern and Central California Chaparral and Oak Woodlands
Dresden	Eastern Temperate Forests	Central Corn Belt Plains
Duane Arnold	Great Plains	Western Corn Belt Plains
Farley	Eastern Temperate Forests	Southeastern Plains
Fermi	Eastern Temperate Forests	Huron/Erie Lake Plains
FitzPatrick	Eastern Temperate Forests	Eastern Great Lakes and Hudson Lowlands

Table D.5-2. (cont.)

Site Name	Level I Description	Level III Ecoregion(s)
Fort Calhoun	Great Plains	Western Corn Belt Plains
Ginna	Eastern Temperate Forests	Eastern Great Lakes and Hudson Lowlands
Grand Gulf	Eastern Temperate Forests	Mississippi Valley Loess Plains, Mississippi Alluvial Plain
Harris	Eastern Temperate Forests	Piedmont, Southeastern Plains
Hatch	Eastern Temperate Forests	Southeastern Plains, Southern Coastal Plain
Hope Creek	Eastern Temperate Forests	Middle Atlantic Coastal Plain
Indian Point	Northern Forests	Northeastern Highlands
Kewaunee	Eastern Temperate Forests	Southeastern Wisconsin Till Plains
LaSalle	Eastern Temperate Forests	Central Corn Belt Plains
Limerick	Eastern Temperate Forests	Northern Piedmont
McGuire	Eastern Temperate Forests	Piedmont
Millstone	Eastern Temperate Forests	Northeastern Coastal Zone
Monticello	Eastern Temperate Forests	North Central Hardwood Forests
Nine Mile Point	Eastern Temperate Forests	Eastern Great Lakes and Hudson Lowlands
North Anna	Eastern Temperate Forests	Piedmont
Oconee	Eastern Temperate Forests	Piedmont
Oyster Creek	Eastern Temperate Forests	Atlantic Coastal Pine Barrens
Palisades	Eastern Temperate Forests	S. Michigan/N. Indiana Drift Plains
Palo Verde	North American Deserts	Sonoran Basin and Range
Peach Bottom	Eastern Temperate Forests	Northern Piedmont
Perry	Eastern Temperate Forests	Eastern Great Lakes and Hudson Lowlands, Erie Drift Plain
Pilgrim	Eastern Temperate Forests	Atlantic Coastal Pine Barrens, Northeastern Coastal Zone
Point Beach	Eastern Temperate Forests	Southeastern Wisconsin Till Plains

Table D.5-2. (cont.)

Site Name	Level I Description	Level III Ecoregion(s)
Prairie Island	Eastern Temperate Forests	Driftless Area
Quad Cities	Eastern Temperate Forests and Great Plains	Interior River Valleys and Hills, Western Corn Belt Plains, Central Corn Belt Plains
River Bend	Eastern Temperate Forests	Mississippi Valley Loess Plains, Mississippi Alluvial Plain
Robinson	Eastern Temperate Forests	Southeastern Plains
Salem	Eastern Temperate Forests	Middle Atlantic Coastal Plain
San Onofre	Mediterranean California	Southern and Central California Chaparral and Oak Woodlands
Seabrook	Eastern Temperate Forests	Northeastern Coastal Zone
Sequoyah	Eastern Temperate Forests	Ridge and Valley
South Texas	Great Plains	Western Gulf Coastal Plain
St. Lucie	Eastern Temperate Forests	Southern Coastal Plain
Summer	Eastern Temperate Forests	Piedmont
Surry	Eastern Temperate Forests	Middle Atlantic Coastal Plain, Southeastern Plains
Susquehanna	Eastern Temperate Forests	Ridge and Valley
Three Mile Island	Eastern Temperate Forests	Northern Piedmont
Turkey Point	Tropical Wet Forests	Southern Florida Coastal Plain
Vermont Yankee	Eastern Temperate Forests and Northern Forests	Northeastern Coastal Zone, Northeastern Highlands
Vogtle	Eastern Temperate Forests	Southeastern Plains
Waterford	Eastern Temperate Forests	Mississippi Alluvial Plain
Watts Bar	Eastern Temperate Forests	Ridge and Valley
Wolf Creek	Great Plains	Central Irregular Plains

Source: EPA 2007b

power plant were determined by obtaining National Wetland Inventory (NWI) data (USFWS 2007) (Table D.5-3). When NWI data were not available, the land cover data were used. Open water areas were assigned to NWI classification on the basis of NWI classification methodology.

Aquatic habitats and the types of aquatic organisms (including special status species) that could be affected by nuclear power plant operations during the license renewal term were determined at a broad level on the basis of the location of the plant and the source of cooling water used by the plant. In cases where cooling systems could affect more than one type of system (e.g., freshwater and estuarine), impacts to both systems were considered in the analysis. Similarly, the potential for migratory aquatic species to be affected by a particular plant was based on reported occurrences of such species in waters used to supply cooling water. Plants that use estuarine or marine water sources for cooling or plants that use freshwater cooling water sources with a potential for containing migratory life stages of Federally managed fishery species were assumed to have a potential for affecting essential fish habitat. In general, existing impingement, entrainment, and thermal impacts on aquatic organisms from cooling water systems were considered to be lower for plants with cooling towers when operating in a closed-cycle mode because those plants withdraw smaller volumes of water for cooling and have comparatively smaller thermal plumes.

Additional information regarding terrestrial and aquatic resources in the vicinity of specific nuclear power plants was obtained from scientific articles and reports, from recently completed SEISs, and from environmental reports (ERs) included as part of the applications submitted by applicants for renewal of reactor licenses. Information from these sources was used to describe the general types of nuclear plant interactions with ecological resources and illustrate impact types observed at the nuclear plants. In some cases, information provided in the 1996 GEIS (NRC 1996) was used to describe the affected environment.

D.5.2 Description of Impact Assessment

A wide range of issues (Table 2.4-1) related to potential impacts of license renewal on ecological resources were evaluated by considering how continuation of operations would affect ecological resources compared to the current condition. Although the ecological impacts associated with plant decommissioning have been previously evaluated by the NRC (2002), the ecological impacts associated with delaying decommissioning because of license renewal were considered as part of the proposed action (Section 4.1.3.5). Potential impacts to terrestrial and aquatic resources were evaluated, in part, by a review of published literature related to the impacting factors associated with operations and associated construction and refurbishment actions during the license renewal term. Although some of the impacts identified were specific to nuclear power plant operation (e.g., effects of radionuclides on biota), impacts associated with non-nuclear power plants also were reviewed (e.g., the effects of bird collisions

Table D.5-3. Percent of Area Occupied by Wetland and Deepwater Habitats Within 5 Miles of Operating Nuclear Power Plants

	Percent of Area Occupied by Wetland and Deepwater Habitat Types								
Site	**Estuarine and Marine Deepwater[b]**	**Estuarine and Marine Wetland**	**Lacustrine**	**Palustrine Pond[c]**	**Riverine**	**Palustrine Emergent Wetland**	**Palustrine Forested/Shrub Wetland**	**Other**	**Total Wetland[d]**
Arkansas[a]	0.0	0.0	11.4	0.0	0.0	0.1	0.2	0.0	11.7
Beaver Valley	0.0	0.0	1.6	0.2	3.5	0.1	0.1	0.0	5.5
Braidwood	0.0	0.0	7.6	1.6	0.4	1.0	0.8	0.0	11.4
Browns Ferry	0.0	0.0	26.6	0.2	0.0	0.7	14.7	0.0	42.2
Brunswick	23.6	15.3	0.6	0.4	0.2	0.5	19.9	0.1	36.9
Byron	0.0	0.0	1.9	0.1	0.0	0.6	0.9	0.0	3.6
Callaway	0.0	0.0	0.3	0.5	1.1	0.8	1.7	0.0	4.5
Calvert Cliffs	52.8	0.5	0.0	0.1	0.0	0.3	2.3	0.0	3.3
Catawba	0.0	0.0	12.0	0.3	0.2	0.0	0.3	0.0	12.9
Clinton	0.0	0.0	8.3	0.1	0.0	0.1	0.4	0.0	9.0
Columbia	0.0	0.0	5.4	0.0	0.0	0.1	0.1	0.0	5.6
Comanche Peak[a]	0.0	0.0	6.6	0.2	0.4	0.0	1.6	0.0	8.8
Cooper	0.0	0.0	0.1	0.3	2.7	0.7	3.1	0.0	6.8
Crystal River	39.1	13.9	0.1	0.3	0.2	2.1	9.6	0.0	26.1
D.C. Cook	0.0	0.0	50.6	0.3	0.0	0.5	2.2	0.0	53.6
Davis Besse	0.0	0.0	53.7	0.8	2.7	7.4	2.0	0.0	66.6
Diablo Canyon	53.8	0.3	0.0	0.0	0.1	0.0	0.5	0.0	0.9
Dresden	0.0	0.0	10.8	1.5	1.2	5.1	3.4	0.0	22.0
Duane Arnold	0.0	0.0	1.0	0.5	1.6	1.2	7.5	0.0	11.7
Farley	0.0	0.0	1.5	0.5	0.0	1.0	10.1	0.0	13.1
Fermi	0.0	0.0	53.3	0.4	0.8	2.0	1.4	0.0	57.9
FitzPatrick[a]	0.0	0.0	60.5	0.0	0.0	0.2	4.7	0.0	65.4
Fort Calhoun	0.0	0.0	1.8	0.3	1.7	0.9	1.6	0.0	6.3

Table D.5-3. (cont.)

Site	Percent of Area Occupied by Wetland and Deepwater Habitat Types								
	Estuarine and Marine Deepwater[b]	Estuarine and Marine Wetland	Lacustrine	Palustrine Pond[c]	Riverine	Palustrine Emergent Wetland	Palustrine Forested/Shrub Wetland	Other	Total Wetland[d]
Ginna[a]	0.0	0.0	61.7	0.1	0.0	0.1	1.2	0.0	63.1
Grand Gulf[a]	0.0	0.0	3.1	0.0	8.8	0.7	26.8	0.0	39.4
Harris	0.0	0.0	9.3	0.3	0.0	0.0	3.5	0.0	13.2
Hatch	0.0	0.0	0.0	0.8	2.3	0.5	20.3	0.0	23.9
Hope Creek	44.1	34.6	0.0	0.4	0.0	1.7	1.4	0.1	38.3
Indian Point	14.7	0.6	0.6	0.8	0.2	0.4	1.8	0.0	4.3
Kewaunee[a]	0.0	0.0	46.6	0.0	0.0	1.0	4.3	0.0	51.9
LaSalle	0.0	0.0	4.5	0.3	0.0	0.1	0.1	0.0	4.9
Limerick	0.0	0.0	0.0	0.3	1.2	0.1	0.4	0.0	2.0
McGuire	0.0	0.0	19.5	0.2	0.0	0.1	1.5	0.0	21.4
Millstone	49.1	1.7	0.3	0.2	0.0	0.1	2.1	0.0	4.3
Monticello	0.0	0.0	2.8	0.7	1.4	4.3	2.5	0.0	11.8
Nine Mile Point[a]	0.0	0.0	60.8	0.0	0.0	0.2	4.6	0.0	65.7
North Anna	0.0	0.0	18.3	0.2	0.1	0.1	2.4	0.0	21.1
Oconee[a]	0.0	0.0	21.8	0.2	0.0	0.0	0.4	0.0	22.3
Oyster Creek	27.0	3.9	0.2	0.2	0.0	0.6	13.0	0.0	18.0
Palisades	0.0	0.0	48.9	0.2	0.0	1.1	7.8	0.1	58.1
Palo Verde[a]	0.0	0.0	1.1	0.0	0.0	0.0	0.1	0.0	1.2
Peach Bottom	0.0	0.0	13.8	0.2	0.3	0.1	0.1	0.0	14.5
Perry[a]	0.0	0.0	48.6	0.1	0.1	0.0	0.5	0.0	49.3
Pilgrim	60.8	1.0	0.8	0.3	0.0	0.1	1.4	0.0	3.6
Point Beach[a]	0.0	0.0	45.3	0.0	0.0	1.2	7.5	0.0	54.0
Prairie Island[a]	0.0	0.0	13.2	1.0	0.1	4.4	13.2	0.0	31.9
Quad Cities	0.0	0.0	8.9	0.7	0.2	2.0	10.3	0.0	22.2

Table D.5-3. (cont.)

Site	Percent of Area Occupied by Wetland and Deepwater Habitat Types								
	Estuarine and Marine Deepwater[b]	Estuarine and Marine Wetland	Lacustrine	Palustrine Pond[c]	Riverine	Palustrine Emergent Wetland	Palustrine Forested/Shrub Wetland	Other	Total Wetland[d]
River Bend[a]	0.0	0.0	0.7	0.7	6.2	1.3	32.7	0.0	41.6
Robinson	0.0	0.0	4.4	0.4	0.0	0.3	8.3	0.0	13.5
Salem	45.0	35.6	0.0	0.4	0.0	1.5	1.3	0.1	39.0
San Onofre	48.1	0.5	0.0	0.0	0.7	0.1	1.3	0.0	2.6
Seabrook	24.3	12.8	0.1	0.3	0.0	0.7	6.9	0.0	20.9
Sequoyah	0.0	0.0	14.7	0.4	0.0	0.0	0.1	0.0	15.1
South Texas	0.0	0.0	14.2	0.2	0.8	5.0	3.1	0.0	23.3
St. Lucie	65.8	4.3	0.0	0.5	0.1	7.0	0.1	0.0	11.9
Summer	0.0	0.0	17.1	0.2	0.6	0.3	2.0	0.0	20.2
Surry	33.8	2.6	1.4	0.2	17.3	3.2	2.4	0.0	27.0
Susquehanna	0.0	0.0	0.2	0.3	3.1	0.1	1.0	0.0	4.6
Three Mile Island	0.0	0.0	0.0	0.3	10.6	0.1	0.3	0.0	11.4
Turkey Point	53.7	12.9	0.0	0.0	0.1	15.7	9.1	0.0	37.8
Vermont Yankee	0.0	0.0	2.7	0.3	1.1	0.6	1.4	0.0	6.1
Vogtle	0.0	0.0	0.3	0.3	1.0	1.6	24.3	0.0	27.4
Waterford	0.0	0.0	1.6	0.9	7.6	11.8	45.8	0.2	67.8
Watts Bar	0.0	0.0	9.2	0.2	0.3	0.2	1.1	0.0	10.9
Wolf Creek[a]	0.0	0.0	13.0	0.7	0.4	0.2	0.6	0.0	14.8

(a) Data were derived, at least in part, from the National Land Cover Database (USGS 2003) and were assigned to NWI categories.
(b) Deepwater habitats are permanently flooded and lie below the deepwater/wetland boundary (Cowardin et al 1979).
(c) Includes the Aquatic Bed and Unconsolidated Bottom wetland classes.
(d) Does not include deepwater habitats.
Source: National Wetlands Inventory (USFWS 2007), except where noted.

with natural draft cooling towers or electric transmission lines, or the effects of impingement, entrainment, and thermal stress on fish and other aquatic organisms). In addition, recently completed SEISs were reviewed for impact evaluations and the presentation of new and potentially significant information on the impacts of plant operations during the renewal term.

The potential impacts of radionuclide exposure on terrestrial and aquatic biota at nuclear power plants were evaluated by reviewing Radiological Environmental Monitoring Program reports (primarily Annual Radiological Environmental Operating Reports) for 15 power plants selected to represent a range of radionuclide concentrations in the environmental media, including plants identified as having high annual worker total effective dose equivalent values or public exposures. In instances where a site's sediment or soil concentration for a particular nuclide was below the lower limit of detection (LLD), the LLD was substituted as the concentration for that media type, thereby resulting in a conservative estimate (i.e., more likely to identify a potential for negative impacts to biota) of potential exposure. The radionuclide concentrations in water, sediment, and soil were then input to the RESRAD-BIOTA dose evaluation model (DOE 2004) to estimate the dose rates for terrestrial and aquatic biota.

The RESRAD-BIOTA code was developed at Argonne National Laboratory based on the U.S. Department of Energy's (DOE's) graded approach to biota dose evaluation (DOE 2002). There are three levels provided by the RESRAD-BIOTA code corresponding to the graded approach to biota dose evaluation. The evaluation presented in Section 4.1.1.5.1 was conducted using RESRAD-BIOTA Level 2, which was necessary for dose modeling. Because the LLDs for water samples were relatively high compared to the Biota Concentration Guide, water radionuclide concentrations below the LLD were estimated using the partition coefficient (K_d value) provided in the RESRAD-BIOTA code.

For all ecological receptors, default bioaccumulation factors and dose limits were used. Radionuclides at each site were evaluated by comparing the sum of the total estimated dose to the default dose limits (riparian animal, 0.1 rad/d; terrestrial animal, 0.1 rad/d; terrestrial plant, 1.0 rad/d; aquatic organisms, 1.0 rad/d). Estimated doses that were less than the dose limit were determined to represent an acceptable radiological risk to the receptor, whereas estimated doses above the dose limit were determined to represent an unacceptable radiological risk to the receptor. More information about the RESRAD-BIOTA code, including instructions for using the model, can be found at http://web.ead.anl.gov/resrad/documents/.

The potential impacts of continued operation of the cooling systems on terrestrial biota at nuclear power plants were evaluated by reviewing published site-specific reports to gather information on the types and concentrations of contaminants released from the cooling systems into the environment and comparing those concentrations to regulatory guidelines to determine whether the contaminants associated with cooling system operation posed any risk to terrestrial resources. Specifically, Radiological Effluent Release Reports (RERRs), ERs, and recently

prepared SEISs for eight nuclear power plants were reviewed to identify the types and concentrations of contaminants associated with the operation of the cooling systems. The eight nuclear power plants were selected to represent different cooling systems and contaminants. Water concentrations were reported in the RERRs, ERs, or SEISs for only two contaminants: chlorine and tritium. The maximum reported concentrations for both contaminants from the site-specific reports were compared to regulatory guidelines and the results from laboratory experiments. Maximum site-specific concentrations below the lowest observed effects level (LOEL) or below the recommended regulatory guideline were considered to represent an acceptable risk to terrestrial resources. Maximum site-specific concentrations above the LOEL or above the recommended regulatory guideline were considered to represent an unacceptable risk to terrestrial resources. Potential effects of contaminants introduced into aquatic environments from cooling water systems were evaluated by reviewing the SEISs that have been previously completed and scientific literature pertaining to potential and observed effects of contaminants and biocides used for maintenance of cooling water systems.

D.6 Historic and Cultural Resources

D.6.1 Description of Affected Resources and Region of Influence

Historic and cultural resources are the physical remains of past human activity that have historic or cultural meaning. They include archaeological sites (e.g., prehistoric campsites and villages), historic era resources (e.g., farmsteads, forts, and canals), and traditional cultural properties (e.g., resource collection areas and sacred areas). Historic and cultural resources that could be affected by license renewal and that are included in the area of potential effect include both those found in areas within the plant property and areas outside the property that would be affected by plant activities. In most cases, license renewal activities would be confined to the current property boundaries and the transmission line ROW up to the first substation. Continued operations, refurbishment, and decommissioning activities may affect currently undeveloped portions of plant property. While some portions of the current plant property and transmission line ROW were affected during construction, it is expected that some resources remain.

D.6.2 Description of Impact Assessment

Historic and archaeological (cultural) resources were identified as resources to be considered for license renewal in the 1996 GEIS (NRC 1996), where they were identified as a Category 2 issue (NRC 1996). The current assessment is in agreement with this categorization. Only through a site-specific assessment can impacts to historic and cultural resources be determined. The reviews focused on the types of resources that are known at the plants, whether the plants were field examined for the resources prior to construction, and where the

plants are located in relation to major water bodies (water being a strong indicator of the presence of historic and cultural resources). Reviews of historic and cultural resources at 27 nuclear plants that have already undergone license renewal indicate that very few archaeological sites had been identified at the power plant locations. Among the plants where field investigations were undertaken, the average number of resources present was 35 per plant. At plants where no field investigations took place, generally no sites were known. While some resources were likely destroyed during construction, there is the potential for some intact resources to remain at most sites. Plant activities that could affect historic and cultural resources during the renewal period include minor construction projects, refurbishment actions, security improvements, landscaping activities, and recreational activities. Procedures are often applied at plants to mitigate the effect of plant activities on historic and cultural resources. Assessment of impacts to historic and cultural resources from these activities can only occur at the plant-specific level.

Transmission lines that would cease operating if a plant shut down are considered within the scope of license renewal. Transmission line ROWs have been developed for many years; however, most ROWs were not examined for historic and cultural resources before construction. Resources likely exist but are unknown to the ROW operator. Danger tree removal and access road maintenance are activities that occur within the transmission line ROW that have the potential to affect historic and cultural resources. Maintenance procedures that consider historic and cultural resources are generally followed to mitigate the effect activities have on the resources. Impacts can only be determined at the plant-specific level.

Potential impacts to historic and archaeological (cultural) resources were considered for decommissioning and were found to be small (NRC 2002). The current assessment evaluates whether continued operations during the license renewal term would affect the conclusions in the decommissioning GEIS for both the plant and transmission lines. The current assessment is based on potential effects of continued operation and refurbishment activities on historic and cultural resources during the license renewal term.

D.7 Socioeconomics and Environmental Justice

D.7.1 Description of Affected Resources and Region of Influence

The impacts of nuclear power plant operations and refurbishment occur at the local level, in the county in which a plant is located, at the regional level, in the counties in which the majority of permanent plant employees reside, and at the State level. The definition of the region around each nuclear plant is based on employee residential location data and the location of vendors providing materials, equipment, and services necessary for operation, maintenance, and any construction that might be required for refurbishment activities. The majority of the economic

and tax revenue data used in the GEIS update was derived from a series of reports developed by the Nuclear Energy Institute (NEI 2003, 2004a,b,c,d, 2005a,b, 2006a,b,c), which was used to describe the socioeconomic environment in the region in which a sample of 11 nuclear plants are located, and for the estimation of impacts of each plant at the local and State levels (Table D.7-1).

Table D.7-1. Definition of Local Areas and Regions at 11 Nuclear Plants

Plant	Counties in Local Area	Additional Counties in Region	State
Diablo Canyon	San Luis Obispo	None	California
Grand Gulf	Warren and Claiborne	Hinds, Franklin, Copiah, Adams	Mississippi
Indian Point	Westchester, Duchess, Orange, Putnam and Rockland	None	New York
Limerick	Montgomery	Berks, Chester	Pennsylvania
Millstone	New London	None	Connecticut
Oconee	Anderson, Greenville, Oconee and Pickens	None	South Carolina
Palo Verde	Maricopa	None	California
Peach Bottom	York	Lancaster, Chester	Pennsylvania
Susquehanna	Luzerne	None	Pennsylvania
Three Mile Island	Dauphin	Lancaster, Lebanon, York, Cumberland, Perry	Pennsylvania
Wolf Creek	Coffey	Lyon, Franklin, Anderson, Shawnee	Kansas

Sources: NEI 2003, 2004a,b,c,d, 2005a,b, 2006a,b,c

D.7.2 Estimation of Direct and Indirect Economic Effects

Nuclear power plant operations generate significant employment and expenditures at each plant site. Wage and salary and nonlabor expenditures create demand for a range of durable and nondurable goods provided by wholesalers and retailers, and also create demand for health and professional services and housing. Power plants also provide tax revenues for local and State governmental entities. In addition to employment, wages and salaries, and nonlabor expenditures directly associated with plant operations, power plants also produce indirect employment and income in the local and State economies as direct expenditures associated with wages and salaries, procurement, and tax revenues, which circulate through the

economies, producing additional economic activity. The magnitude of the indirect economic impact of labor spending at each plant is determined by the extent to which plant employees live in the local area and region around each plant. The indirect impact of nonlabor expenditures is determined by the extent to which vendors of materials, equipment, and supplies are located in the local area and region.

Estimation of the indirect impact of nuclear power plants on local and State employment and income in NEI data was based on the use of regional economic multipliers in association with plant expenditure data for the construction and operations phases. Multipliers capture the indirect (offsite) effects of onsite activities associated with construction and operation of an activity or event. Expenditure data associated with the construction and operation of nuclear power plants were derived from individual utility sources, which provided the relevant construction and operating cost data for wages and salaries and nonlabor expenditures (procurement of materials, equipment, and services) and tax revenues.

Expenditure data in the NEI reports were mapped into the relevant North American Industry Classification System codes for use with multipliers from an IMPLAN model specified for the local area and State in which each power plant is located. IMPLAN input-output economic models are based on economic accounts showing the flow of commodities to industries from producers and institutional consumers. The accounts also show consumption activities by workers and owners of capital and imports from outside the region. The IMPLAN model contains 528 sectors representing industries in agriculture, mining, construction, manufacturing, wholesale and retail trade, utilities, finance, insurance and real estate, and consumer and business services. The model also includes information for each sector on employee compensation; proprietary and property income; personal consumption expenditures; Federal, State, and local expenditures; inventory and capital formation; and imports and exports. More information on the IMPLAN model and data can be found in each NEI report (NEI 2003, 2004a,b,c,d, 2005a,b, 2006a,b,c).

In addition to NEI data on direct power plant employment, wage and salary spending, materials and equipment expenditures, and local and State tax revenues, NEI estimates of indirect employment and income impacts at the local and State levels associated with power plant labor and nonlabor expenditures and tax revenue spending were reported in the analysis of impacts in the GEIS update.

Impacts of plant operations and refurbishment are likely to vary according to the scale of employment and expenditures at each power plant and the type of economy in which each plant is located. To assess the impact of power plant size and location in the GEIS update, 11 power plants for which direct and indirect impacts were estimated by NEI were classified according to whether the economic structure in the locality and region around each plant is rural or semi-urban. Rural areas often have relatively simple economies, and agriculture is often the primary

economic activity. Many of the industries that provide equipment and services important to power plant operations are largely absent in rural areas, which have smaller, less diversified labor markets, with often lower skilled, lower paying occupations. In addition to agriculture and related activities, in some locations there may also be a range of other activities, including resource extraction, manufacturing, and transportation industries that provide employment and income. In semi-urban areas, where economic structures are more complex than in rural areas, there are a wider range of industries and larger and more diverse labor markets. Semi-urban areas may also serve specialized economic functions, including maritime shipping, fishing, boatbuilding, recreation, and tourism and numerous locations featuring residential areas hosting second homes and retirement communities.

D.7.3 Environmental Justice Assessment Methods

Executive Order 12898, *Federal Actions to Address Environmental Justice in Minority Populations and Low-Income Populations*, formally requires Federal agencies to incorporate environmental justice as part of their missions. Specifically, it directs them to address, as appropriate, any disproportionately high and adverse human health or environmental effects of their actions, programs, or policies on minority and low-income populations. Additional guidance for undertaking environmental justice reviews is described in Section 3.10.

The analysis of the impacts of nuclear power plant operations and refurbishment during the license renewal term on environmental justice has three parts: (1) a description of the geographic distribution of low-income and minority populations in the affected area; (2) an assessment of whether the impacts of license renewal would produce impacts that are high and adverse; and (3) if impacts are high and adverse, a determination as to whether these impacts disproportionately affect minority and low-income populations.

The analysis considers minority and low-income populations who reside within a 50-mi (80-km) radius of a nuclear plant. Data on low-income and minority individuals are collected and analyzed at the census tract or census block group level.

Minority individuals are those who identify themselves as members of the following population groups: Hispanic or Latino, American Indian or Alaska Native, Asian, Black or African-American, Native Hawaiian or Other Pacific Islander, or two or more races. Beginning with the 2000 census, where appropriate, the census form allows individuals to designate multiple population group categories to reflect their ethnic or racial origin. In addition, persons who classify themselves as being of multiple racial origins may choose up to six racial groups as the basis of their racial origins. The term minority includes all persons, including those classifying themselves in multiple racial categories, except those who classify themselves as not of Hispanic origin and as White or Other Race.

Minority populations are identified when (1) the minority population of an affected area exceeds 50 percent or (2) the minority population percentage of the affected area is “meaningfully greater than” the minority population percentage in the general population or other appropriate unit of geographic analysis. Minority populations may be communities of individuals living in close geographic proximity to one another, or a geographically dispersed or transient set of individuals (e.g., migrant workers or American Indians) where the group experiences common conditions of environmental exposure or effect. The appropriate unit of geographic analysis may be a political jurisdiction, county, region, or State or other similar unit that is chosen so as not to artificially dilute or inflate the affected minority population.

Low-income individuals are those whose annual income falls below the poverty line. The poverty line takes into account family size and the age of individuals in the family. In 1999, for example, the poverty line for a family of five with three children below the age of 18 was $19,882. For any given family below the poverty line, all family members are considered as being below the poverty line for the purposes of analysis. Low-income populations in an affected area are identified with the annual statistical poverty thresholds from the Census Bureau’s Current Population Reports, Series PB60. Low-income populations may be communities of individuals living in close geographic proximity to one another, or a set of individuals (e.g., migrant workers) where the group experiences common conditions of environmental exposure or effect.

Nuclear power plant license renewal could affect environmental justice if any adverse health and environmental impacts are significantly high, and if these impacts would disproportionately affect minority and low-income populations. If the analysis determines that health and environmental impacts are not significant, there can be no disproportionate impacts to minority and low-income populations. Disproportionately high and adverse human health effects occur when the risk or rate of exposure to an environmental hazard for a minority or low-income population is significant (as defined by the Council on Environmental Quality, CEQ) and appreciably exceeds the risk or exposure rate for the general population or for another appropriate comparison group. Disproportionately high environmental impacts that are significant (as defined by CEQ) are impacts or risks of impacts on the natural or physical environment in a low-income or minority community that appreciably exceed the environmental impact on the larger community. Such effects may include ecological, cultural, economic, or social impacts. Adverse environmental impacts are impacts that are determined to be both harmful and significant (as defined by CEQ). In assessing cultural and aesthetic environmental impacts, impacts that uniquely affect geographically dislocated or dispersed minority or low-income populations or American Indian Tribes are considered (CEQ 1997).

D.8 Human Health

D.8.1 Radiological Effects

Nuclear power plants produce electricity through a heat-generating process known as “fission,” in which neutrons split uranium atoms to produce large amounts of energy. Any material that is capable of undergoing fission by neutrons in a self-sustaining chain reaction is called fissile material. The most common fissile isotopes are uranium-235 and plutonium-239. Neutrons whose energy distribution is in thermal equilibrium with the ambient medium are called thermal neutrons. When a thermal neutron strikes uranium-235, it splits the uranium atom into two isotopes with a smaller atomic weight (called fission products) and several neutrons (the mean number of neutrons per fission of uranium-235 is 2.5) and gamma rays. All fission products are radioactive and decay to form other radioactive isotopes. The amount of energy generated in a fission reaction is about 200 MeV, and this energy is distributed among fission products, neutrons, and fission gamma rays. Most of the energy generated in the nuclear fission process is dissipated as thermal energy and is converted into electrical energy in a nuclear power plant. Nuclear fission differs from other forms of radioactive decay in that it can be harnessed and controlled via a chain reaction in which neutrons released by each fission event trigger yet more events, which, in turn, release more neutrons and cause more fission.

In a nuclear reactor, a controlled sustained chain reaction is produced. The core of a nuclear reactor consists of fuel (containing uranium enriched in uranium-235), a moderator to slow down the neutrons released in fission, a coolant to remove the thermal energy, and control rods for controlling the chain reaction. In enriched uranium, the percent composition of uranium-235 is increased (2 to 5 percent) from its natural composition (about 0.7 percent) in uranium. The nuclear power plants in the United States use water as both a moderator and a coolant. During the fission process, a large inventory of radioactive fission products builds up within the fuel. Virtually all of the fission products are contained within the fuel pellets. The fuel pellets are enclosed in hollow metal rods (cladding), which are hermetically sealed to further prevent the release of fission products. However, a small fraction of the fission products migrate from the fuel rods and contaminate the reactor coolant. The primary system coolant also has radioactive contaminants as a result of neutron activation (a process by which a stable atom becomes radioactive after undergoing a reaction with a neutron). Neutrons also interact with structural materials inside the pressure vessel and with the pressure vessel itself and make those materials radioactive.

D.8.1.1 Background Information on Radiation

Atoms are the basic building blocks of matter. An atom consists of three basic particles: (1) neutrons (neutral particles), (2) protons (positively charged particles), and (3) electrons (negatively charged particles). Neutrons and protons combine to form the positively charged nucleus which is the central part of the atom. The electrons revolve around the nucleus in different orbits. Atoms of different types are known as elements. Elements differ in the number of protons and electrons they have, but they have an equal number of each. When atoms of an element have a different number of neutrons, they are called isotopes of that element. Elements have many isotopes, and some of them may be unstable.

Radiation is energy transmitted in the form of waves or particles. There are two basic types of radiation: particulate radiation and electromagnetic radiation. Particulate radiation (alpha and beta radiation) has both mass and energy associated with it. Electromagnetic radiation is pure energy with no mass, such as x-rays and gamma rays. Radiation is produced when unstable isotopes undergo spontaneous change, known as radioactive disintegration or radioactive decay. The rate of decay is measured by how long it takes for half of the sample to decay. When an unstable isotope changes into a more stable form it may emit either an alpha particle or a beta particle. These reactions may or may not be associated with gamma radiation. The alpha and beta particles are generally referred to as ionizing radiation.

An alpha particle emits positively charged, highly energetic ionizing radiation that consists of two protons and two neutrons. Alpha particles are extremely limited in their ability to penetrate matter, and they can be stopped easily by a sheet of paper or by the outer layer of the skin. In air, they can travel only a few centimeters. Therefore, alpha particles outside the body do not cause any external radiation exposure. However, when the alpha particles are ingested or inhaled they dissipate all their energy in the living tissue, which results in radiation exposure.

A beta particle is an electron that is much lighter than an alpha particle. It can travel a longer distance in air than an alpha particle but can still be stopped by a thin sheet of aluminum foil. Low-energy beta emitters in general do not result in external radiation exposure, but high-energy beta emitters, when stopped by shielding, may generate Bremsstrahlung x-rays that may result in external radiation exposure. The intake of beta particles would result in internal radiation exposure.

X-rays and gamma rays are waves of pure energy that travel with the speed of light and are very penetrating; they require thick concrete or lead shielding to stop them. X-rays and gamma rays can result in both external and internal radiation exposure.

Neutrons lose energy through collisions with the nuclei of the atoms in their environment. They generally slow down to thermal or near thermal energies and are captured by nuclei of the

absorbing material. Therefore, neutrons generally travel long distances in air or metallic components before they are absorbed. Radiation exposure occurs from gamma rays and alpha particles that are emitted when a neutron is captured in matter.

D.8.1.2 Conventional Quantities and Units

Following is the list of conventional terms used in the evaluation of radiological human health impacts.

- Absorbed dose: The energy imparted by ionizing radiation per unit mass of the irradiated material. The units of absorbed dose are the rad and the gray (Gy).

- Activity: The rate of disintegration (transformation) or decay of radioactive material. The units of radioactivity are the curie (Ci) and the Becquerel (Bq).

- Collective dose: The sum of the individual doses received in a given period of time by a specified population from exposure to a specified source of radiation.

- Committed dose equivalent: The dose equivalent to organs or tissues of reference that will be received from an intake of radioactive material by an individual during the 50-year period following the intake.

- Committed effective dose equivalent: The sum of the products of the weighting factors applicable to each of the body organs or tissues that are irradiated and the committed dose equivalent to these organs or tissues.

- Deep-dose equivalent: Applies to external whole-body exposure and is the dose equivalent at a tissue depth of 1 cm.

- Dose equivalent: The product of the absorbed dose in tissue, quality factor, and all other modifying factors at the location of interest. The units of dose equivalent are the rem and the sievert (Sv).

- Effective dose equivalent: The sum of the products of the dose equivalent to the organ or tissue and the weighting factors applicable to each of the body organs or tissues that are irradiated.

- External dose: That portion of the dose equivalent received from radiation sources outside the body.

- Internal dose: That portion of the dose equivalent received from radioactive material taken into the body.

- Nonstochastic effect: Health effects, the severity of which varies with the dose and for which a threshold is believed to exist. Radiation-induced cataract formation is an example of a nonstochastic effect (also called a deterministic effect).

- Organ dose: Dose received as a result of radiation energy absorbed in a specific organ.

- Occupational dose: Dose received by an individual in the course of employment in which the individual's assigned duties involve exposure to radiation or to radioactive material.

- Public dose: The dose received by a member of the public from exposure to radiation or radioactive material.

- Quality factor: The modifying factor (see Table D.8-1) that is used to derive the dose equivalent from the absorbed dose.

- Shallow-dose equivalent: Applies to external exposure of the skin or an extremity and is taken as the dose equivalent at a tissue depth of 0.007 cm averaged over an area of 1 cm^2.

- Stochastic effect: Health effects that occur randomly and for which the probability of the effect occurring, rather than its severity, is assumed to be a linear function of dose without threshold. Hereditary effects and cancer incidence are examples of stochastic effect.

Table D.8-1. Quality Factors and Absorbed Dose Equivalencies

Type of Radiation	Quality Factor	Absorbed Dose Equal to a Unit Dose Equivalent[(a)]
X-, gamma, or beta radiation	1	1
Alpha particles, multiple-charged particles, fission fragments, and heavy particles of unknown energy.	20	0.05
Neutrons of unknown energy	10	0.1
High energy protons	10	0.1

(a) Absorbed dose in rad equal to 1 rem or the absorbed dose in gray equal to sievert.
Source: 10 CFR Part 20

- Total body dose: Sum of the dose received from external exposure to the total body, gonads, active blood-forming organs, head and trunk, or lens of the eye and the dose due to the intake of radionuclides by inhalation and ingestion where a radioisotope is uniformly distributed throughout the body tissues rather than being concentrated in certain parts.

- Total effective dose equivalent: The sum of the deep-dose equivalent (for external exposure) and the committed effective dose equivalent (for internal exposure).

- Weighting factor: The fraction of the overall health risk, resulting from uniform whole body irradiation, attributable to a specific organ or tissue. Table D.8-2 lists organ dose weighting factors.

- Whole body dose: Same as total body dose.

Table D.8-2. Organ Dose Weighting Factors

Organ or Tissue	Weighting Factor
Gonads	0.25
Breast	0.15
Red bone marrow	0.12
Lung	0.12
Thyroid	0.03
Bone surfaces	0.03
Remainder	0.30[(a)]
Whole body	1.00[(b)]

(a) 0.30 results from 0.06 for each of five "remainder" organs (excluding the skin and the lens of the eye) that receive the highest doses.
(b) For the purpose of weighting the external whole body dose (for adding it to the internal dose), a single weighting factor of 1 has been specified.
Source: 10 CFR Part 20

D.8.1.3 Biological Effects of Radiation

Radiation interacts with the atoms that form the cells. There are two mechanisms by which radiation affects cells: direct action and indirect action. In a direct action, the radiation interacts directly with the atoms of the DNA molecule or some other component critical to the survival of the cell. Since the DNA molecules make up a small part of the cell, the probability of direct action is small. Because most of the cell is made up of water, there is a much higher probability that radiation would interact with water. In an indirect action, radiation interacts with water and breaks the bonds that hold the water molecule together and produces reactive free radicals that are chemically toxic and destroy the cell. The body has mechanisms to repair damage caused by radiation. Consequently, biological effects of radiation on living cells may result in three outcomes: (1) injured or damaged cells repair themselves, resulting in no residual damage; (2) cells die, much like millions of body cells do every day, being replaced through normal biological processes; or (3) cells incorrectly repair themselves, resulting in a biophysical change. Stochastic effects may occur when an irradiated cell is modified rather than killed. A modified

cell may, after a prolonged delay, develop into a cancer.

The biological effects on the whole body from exposure to radiation depend on many factors, such as the type of radiation, total dose, time interval over which the dose is received, and part of the body that is exposed. Not all organs are equally sensitive to radiation. The blood-forming organs are most sensitive to radiation; muscle and nerve cells are relatively insensitive to radiation. There could be two types of radiation exposure: (1) a single accidental exposure to high doses of radiation for a short period of time (acute exposure), which may produce biological effects within a short time after exposure, and (2) long-term, low-level overexposure, commonly called continuous or chronic exposure. High doses of radiation can cause death. Other possible effects of a high radiation dose include erythema, dry desquamation, moist desquamation, hair loss, sterility, cataracts, and acute radiation syndromes. Low doses of radiation can cause genetic effects and carcinogenic effects.

D.8.1.4 Human Health Effects of Radiation

Radiation can cause a variety of health effects. The most significant of these are induced cancer fatalities. The National Research Council's Committee on the Biological Effects of Ionizing Radiation (BEIR) has prepared a series of reports on the health consequences of radiation exposure. In the 1996 GEIS (NRC 1996) the NRC staff summarized the risk estimates from different reports including BEIR-I, BEIR-III, and BEIR-V, the 1988 UNSCEAR (United Nations Scientific Committee on the Effects of Atomic Radiation) reports, and International Commission on Radiological Protection (ICRP) Publication 26.

In 1991, the ICRP issued a complete set of new recommendations based on new biological information (ICRP 1991). Table D.8-3 provides the nominal probability coefficients for stochastic effects. ICRP estimated the probability of fatal cancer by using the data on the Japanese survivors of the Hiroshima and Nagasaki atomic bombs and their assessment by

Table D.8-3. Nominal Probability Coefficients for Stochastic Effects

Exposed Population	Probability Coefficients (10^{-4} rem^{-1})[(a)]			
	Fatal Cancer	Nonfatal Cancer	Total Cancer	Severe Hereditary Effects
Adult workers	4.0	0.8	4.8	0.8
Whole population	5.0	1.0	6.0	1.3

(a) Rounded values.
Source: ICRP 1991

BEIR and UNSCEAR committees. ICRP reviewed the available experimental data on dose-response relationships for radiation of low linear energy transfer (LET) and the effect of dose and dose rate on this relationship and concluded that the dose-response relationship is most probably linear quadratic for low LET radiations. The BEIR-V risk estimate (eight cancer fatalities among 10,000 people exposed to 10,000 person-rem) was based on a high dose. ICRP in its 1991 recommendations used a dose and dose rate effectiveness factor (DDREF) of 2 to convert the high-dose or high-dose-rate estimates of risk to low-dose or low-dose-rate estimates of risk. The estimates of severe hereditary effects were also based on the experimental data on genetic effects in animals, which were in assessments done by BEIR and UNSCEAR committees.

In 1993, the National Council on Radiation Protection and Measurement (NCRP) recommended that a lifetime risk of fatal cancer of 4×10^{-4}/(person-rem) be used for a worker population and similarly, a lifetime risk of 5×10^{-4}/(person-rem) be used for the general population. The NCRP also recommended a risk estimate of about 1×10^{-4}/(person-rem) for severe hereditary effects in the total population and a somewhat lower risk estimate for the worker population (NCRP 1993). These recommendations are similar to the ICRP recommendations on the lifetime risk of fatal cancer.

In 1999, the EPA issued Federal Guidance Report No. 13, which provides numerical factors for use in estimating the risk of cancer from low-level exposure to radionuclides. Risk coefficients are provided for the following modes of exposure to a given radionuclide: inhalation of air, ingestion of food, ingestion of tap water, external exposure from submersion in air, external exposure from the ground surface, and external exposure from soil contaminated to an infinite depth (EPA 1999). The risk coefficients are applicable to either chronic or acute exposure to a radionuclide.

In 2006, the National Research Council's Committee on the Biological Effects of Ionizing Radiation (BEIR) published its latest report BEIR-VII, *Health Risks from Exposure to Low Levels of Ionizing Radiation* (BEIR 2006). The committee had published its previous report on the same topic, BEIR-V, in 1990 (BEIR 1990).

Three major changes have occurred after the BEIR V report was published. First, an additional 12 years of follow-up medical data were available. Second, cancer incidence data for the cohort were available (for BEIR V, only mortality data were available). The impact of these two developments has reduced the uncertainty in the assessment of cancer risk among the atomic bomb survivors. Third, the dosimetry system used to assign radiation exposure to the atomic bomb survivors was replaced with an improved dosimetry system. These changes have improved the understanding of the health risks associated with radiation exposure (NRC 2005).

In estimating the cancer risk, the committee used the Hiroshima and Nagasaki atomic bomb survival data for the period 1958-1998 and a dose and dose rate effectiveness factor of 1.5 was used. Table D.8-4 lists the recommended risk coefficients for cancer incidence and fatality. Table D.8-4 shows the estimated cancer cases and deaths in the U.S. population that would be expected to result if each individual in a population of 100,000 was exposed to a single dose of 10 rad. It also shows the number that would be expected in the absence of radiation. The 95 percent confidence intervals are also shown.

The BEIR VII committee's preferred estimate of lifetime attributable risk for solid cancer incidence and mortality (Table D.8-4) suggests that females are more sensitive than males to radiation exposure at 10 rem, a level that is 100 times the NRC's radiation protection standards specified in 10 CFR Part 20. The BEIR VII committee's preferred estimate of lifetime attributable risk for leukemia cancer incidence and mortality (Table D.8-4), moreover, suggests that males are more sensitive than females. The BEIR VII committee uses the 95 percent confidence intervals associated with estimated lifetime cancer risk for males and females that suggest that the apparent gender difference may not be statistically significant.

Table D.8-4. Estimates of Lifetime Attributable Risk of Incidence and Mortality for All Solid Cancers and for Leukemia in the BEIR VII Report[(a)]

	All Solid Cancers		Leukemia	
Category	**Males**	**Females**	**Males**	**Females**
Excess cases (including nonfatal cases) from exposure to 10 rad	800 (400–1600)	1300 (690–2500)	100 (30–300)	70 (20–250)
Number of cases in the absence of exposure	45,500	36,900	830	590
Excess deaths from exposure to 10 rad	410 (200–830)	610 (300–1200)	70 (20–220)	50 (10–190)
Number of deaths in the absence of exposure	22,100	17,500	710	530

(a) Number of cases or deaths per 100,000 exposed persons with 95% subjective confidence intervals shown in parentheses.
Source: BEIR 2006

Table D.8-5 compares the BEIR VII risk estimates for whole population with estimates recommended by BEIR V, ICRP, EPA, and UNSCEAR in recent years. The overall difference in the risk estimates recommended by different organizations is statistically insignificant. In this regard, the BEIR VII report states: "in general the magnitude of estimated risks for total cancer mortality or leukemia has not changed greatly from estimates in past reports such as BEIR V and recent reports of the United Nations Scientific Committee on the Effects of Atomic

Table D.8-5. Comparison of BEIR VII Lifetime Cancer Mortality Estimates with Those from Other Reports

Cancer Category	BEIR V[(a)] (1990)	ICRP[(b)] (1991)	EPA[(b)] (1999)	UNSCEAR[(c)] (2000)	BEIR VII[(d)] (2006)
Leukemia[(e)]	50	56	50	-[(f)]	61
All cancer except leukemia	460	450	520	-	-
All solid cancers (sum)	-	-	-	520	510

NOTE: Excess deaths for population of 100,000 of all ages and both sexes exposed to 10 rad.
(a) Average of estimates for males and females. The values show the results that would be obtained if the DDREF of 1.5, used by the BEIR VII committee, had been employed.
(b) Except for the EPA breast and thyroid cancer estimates, the solid cancer estimates are linear estimates reduced by a DDREF of 2.
(c) Average of estimates for males and females. The estimate is a combined estimate (using the same weights as used by the BEIR VII committee applied on a logarithmic scale) reduced by a DDREF of 1.5.
(d) Average of the committee's preferred estimates for males and females.
(e) Estimates based on a linear-quadratic model.
(f) Not reported.
Source: BEIR VII (2006)

Radiation (UNSCEAR) and the International Commission on Radiological Protection (ICRP). New data and analyses have reduced sampling uncertainty, but uncertainties related to estimating risk for exposure at low doses and dose rates and transporting risks from Japanese A-bomb survivors to the U.S. population remain large. Uncertainties in estimating risks of site specific cancers are especially large."

If the total fatal cancer risk is the sum of cancer deaths from all solid cancers and leukemia, then the fatal cancer risk coefficient for the general public would be 6×10^{-4}/person-rem (see Table D.8-5). The fatal cancer risk for the general public based on ICRP is 5×10^{-4}/person-rem (Table 3.9-20). There is a difference of approximately 20 percent in the fatal cancer risk coefficient based on the ICRP recommendation and the BEIR-VII report. The difference of 20% is within the margin of uncertainty associated with these estimates.

D.8.1.5 Methodology for Estimating Radiological Impacts

Radiological exposures from nuclear power plants include offsite doses to members of the public and onsite doses to the workforce. Nuclear power plants must be licensed by the NRC and comply with NRC regulations and conditions specified in the license. The licensees are required to comply with 10 CFR Part 20, Subpart C, "Occupational Dose Limits for Adults," and 10 CFR Part 20, Subpart D, "Radiation Dose Limits for Individual Members of the Public" (see Section 3.9.1.1).

D.8.1.5.1 Methodology for Estimating Worker Doses

Plant workers conducting activities involving radioactively contaminated systems or working in radiation areas can be exposed to radiation. Most of the occupational radiation dose to nuclear plant workers results from external radiation exposure rather than internal exposure from inhaled or ingested radioactive materials. Workers also receive radiation exposure during the storage and handling of radioactive waste and during the inspection of stored radioactive waste. However, these sources of exposure are small when compared with other sources of exposure at operating nuclear plants.

Individual occupational doses are measured by NRC licensees as required by the basic NRC radiation protection standard, 10 CFR Part 20 (Section 3.9.1.1). This standard includes requirements for summing internal and external dose equivalents to yield the total effective dose equivalent (TEDE).

Worker doses from external exposure at a nuclear power plant are measured by using either a thermoluminescence dosimeter (TLD) or a film badge. Workers at nuclear plants, in addition to wearing these, wear direct-reading dosimeters (electronic dosimeters) in order to monitor occupational doses related to specific jobs. A TLD may be a Teflon disc impregnated with lithium fluoride sealed in a polyethylene envelope. The TLD is the most widely used personal monitor for gamma radiation and charged particles. Direct-reading dosimeters are useful in situations where there is the potential for sudden or large increases in exposure rate.

The potential external exposure for workers involved in radioactive waste management will likely result from gamma and beta radiation, and the use of the external monitoring devices discussed above is necessary. Internal dosimetry is used when there is a potential that the body may have taken in radioactive material. There are two methods to calculate the committed dose equivalent: 1) measurement of the airborne concentration and the time a worker spends in that area and 2) urinalysis and monitoring of feces or blood. At nuclear power plants, method 1 is generally used. However, for complex situations the mathematical models of the radionuclide's retention and excretion are generally used, as are measurements of the radioactive material content in the excreta, to estimate the doses. Bioassay techniques, such as urinalysis, provide a screening tool to maintain and verify operational radiation protection and control.

For this GEIS revision, worker dose information was obtained from the 38th annual report titled *Occupational Radiation Exposure at Commercial Nuclear Power Reactors and Other Facilities 2005* (Burrows and Hagemeyers 2006). This report summarizes the occupational exposure data maintained by the NRC's Radiation Exposure Information and Reporting System (REIRS). The licensees submit radiation exposure records for each monitored individual.

D.8.1.5.2 Methodology for Estimating Public Doses

Commercial nuclear power plants, under normal operations, release small amounts of radioactive materials to the environment. The effluent releases (gaseous and liquid) result in radiation doses to humans. Nuclear power plant licensees must comply with Federal regulations (e.g., 10 CFR Part 20, Appendix I to 10 CFR Part 50, 10 CFR Part 50.36a, and 40 CFR Part 190) and conditions specified in the operating license (see Section 3.9.1.1). Appendix I to 10 CFR Part 50 provides numerical values for radioactive effluent design objectives. In addition, each plant license contains technical specification requirements for controlling and limiting the discharge of radioactive gaseous and liquid effluents.

Potential environmental pathways through which persons may be exposed to radiation originating in a nuclear power reactor include atmospheric and aquatic pathways. Radioactive materials released under controlled conditions include fission products and activation products. Fission product releases consist primarily of the noble gases and some of the more volatile materials like tritium, isotopes of iodine, and cesium. These materials are monitored carefully before release to determine whether the limits on releases can be met. Releases into aquatic systems are similarly monitored. When an individual is exposed through one of these pathways, the dose is determined in part by the exposure time, the amount of material ingested or inhaled, and in part by the amount of time that the radioactivity inhaled or ingested is retained in the individual's body. The major exposure pathways include the following:

- Inhaling contaminated air,
- Drinking milk or eating meat from animals that graze on open pasture on which radioactive contamination may be deposited,
- Eating vegetables grown near the site, and
- Drinking (untreated) water or eating fish caught near the point of discharge of liquid effluents.

Other less important exposure pathways include external irradiation from surface deposition; consumption of animals that drink water that may contain liquid effluents; consumption of crops grown near the site using irrigation water that may contain liquid effluents; shoreline, boating, and swimming activities; and direct offsite irradiation from radiation coming from the plant.

To implement Appendix I of 10 CFR Part 50, the NRC has developed a series of Regulatory Guides that present methods it finds acceptable for calculating effluent releases, the dispersion of effluent in the atmosphere and different water bodies, and the associated radiation doses. In general, licensees follow the guides developed by the NRC staff to calculate public doses.

Liquid effluent from a nuclear power plant may be released into a variety of surface water bodies (e.g., rivers, lakes, reservoirs, cooling ponds, estuaries, and open coastal waters). The released liquid effluent is dispersed by turbulent mixing and by stream flow in rivers, by tidal or nontidal coastal currents in estuaries and coastal waters, and by internal circulation or flow-through in lakes, reservoirs, and cooling ponds. Many parameters (e.g., direction and speed of the flow of currents in the receiving water bodies; size, geometry, and bottom topography of the water body) influence dispersion and dilution. Revision 1 of Regulatory Guide 1.113 (NRC 1977a) describes calculational models for estimating the aquatic dispersion of routine or accidental releases of radioactive material from a nuclear power plant to a surface water body.

Gaseous effluents from nuclear power plants are mostly released through tall stacks or vents near the top of buildings. In some cases, releases could occur near ground level; an example is when auxiliary equipment or a component such as a waste storage tank is housed outside the buildings. Effluent concentrations at downwind locations depend on many parameters (e.g., the initial release height, size and shape of the release point, initial vertical velocity of the effluent, heat content of the effluent, ambient wind speed and temperature, atmospheric stability, and effluent removal mechanisms). Geographic features such as hills, valleys, and large bodies of water greatly influence dispersion and airflow patterns. Revision 1 of Regulatory Guide 1.111 (NRC 1977b) describes basic features of the calculational models and assumptions used to estimate the atmospheric transport and dispersion of gaseous effluents in routine releases from nuclear power plants.

Revision 1 of Regulatory Guide 1.109 (NRC 1977c) provides methods for calculating radiation doses to the public. Appendix A of the regulatory guide describes methods for calculating doses from liquid effluent pathways. The appendix includes the method for calculating doses from potable water, aquatic food, shoreline deposits, and foods grown on land with contaminated water. Appendix B of the regulatory guide describes models and assumptions for calculating doses from noble gases discharged to the atmosphere. It includes the annual gamma and beta air dose calculations and the annual total body and skin dose calculations from noble gas effluents. Appendix C of the regulatory guide provides models and assumptions for calculating doses from radioiodines and other radionuclides released in the atmosphere. It includes the annual external dose calculation from direct exposure to radioactivity deposited on the ground surface, annual dose from inhalation of radionuclides in air, calculation of the radionuclide concentration in food from airborne activity, and calculation of the annual dose from contaminated foods. Appendix D of the regulatory guide provides models for calculating population doses from nuclear power plant effluents.

Radiation doses to the public are calculated in two ways. The first calculation is for dose to the maximally exposed person (that is, the real or hypothetical individual potentially subject to maximum exposure). The second is for doses to the average individual and population. Doses are calculated by using site-specific data when available. For those cases in which site-specific

data are not readily available, conservative (overestimating) assumptions are used to estimate doses to the public. For calculating the dose, Regulatory Guide 1.109 divides the population into four age groups: infants (0 to 1 year), children (1 to 11 years), teenagers (11 to 17 years), and adults (17 years and older). Doses are calculated for the maximum exposed individual from these four age groups and compared with the design objectives (Table 3.9-2). Regulatory Guide 1.109 includes the dose factors for these four age groups.

Every year licensees submit two reports to the NRC: an annual radiological environmental monitoring report and an annual radioactive effluent release report. For this GEIS update, public doses from gaseous and liquid effluent releases were obtained from a series of annual radioactive effluent release reports.

D.8.2 Chemical Hazards

In nuclear power plants, chemical effects could result from discharges of chlorine or other biocides, small-volume discharges of sanitary and other liquid wastes, chemical spills, and heavy metals leached from cooling system piping and condenser tubing. Although information was provided about certain types of chemicals used at nuclear power plants, chemical hazards were not specifically addressed in the 1996 GEIS, but the human health impacts of chemicals are included in this GEIS update (Section 3.9.2). Impacts of chemical discharges on human health are considered to be small if the discharges to water bodies are within effluent limits designed to ensure the protection of water quality. The methodology for assessing effects on water quality and aquatic biota are covered in other parts of this appendix. Human health impacts from chemicals were assessed on the basis of information provided in the 1996 GEIS, published literature, available SEISs, and the decommissioning GEIS (NRC 2002).

D.8.3 Microbiological Hazards

Some microorganisms associated with cooling towers and the thermal discharges associated with nuclear power plants can have deleterious impacts on the health of plant workers and the public. The potential for adverse health effects on workers at nuclear power plants as a result of the enhancement of microorganisms is an issue for plants that use cooling towers. The potential for adverse health effects on the public from thermally enhanced microorganisms is an issue for nuclear plants with once-through cooling systems that use cooling ponds, lakes, or canals and that discharge to small rivers. These issues were evaluated by reviewing the information in the 1996 GEIS and published literature on organisms that could be enhanced by plant operation. All published SEISs were also reviewed for new and significant information pertaining to microbiological issues.

D.8.4 Electromagnetic Fields

Nuclear power plants have power transmission systems associated with them that consist of switching stations (or substations) located on the plant site and transmission lines located primarily offsite. Electric and magnetic fields, collectively referred to as the electromagnetic field (EMF), are produced by operating transmission lines. The issue of potential chronic effects from exposure to EMF surrounding transmission lines was evaluated by reviewing the relevant literature.

D.8.5 Other Hazards

Nuclear power plants are industrial facilities that have many of the typical occupational hazards found at any other electric power generation facility. Workers at or around nuclear power plants would be involved in some maintenance activities, electrical work, electric power line maintenance, and repair work and subject to potentially hazardous physical conditions (excessive heat, cold, pressure, etc.). The human health impact from occupational hazards was not discussed in the 1996 GEIS but is considered in this GEIS update (Section 3.9.5). The occupational hazards were evaluated by comparing the rate of fatal injuries and nonfatal occupational injuries and illnesses in the utility sector with the rate in all industries combined.

The workers and general public located at or around nuclear power plants and along the transmission lines are exposed to the potential for acute electrical shock from transmission lines. The shock hazard was evaluated by referral to the National Electric Safety Code (NESC).

D.9 Waste Management and Pollution Prevention

D.9.1 Description of Affected Resources and Region of Influence

Similar to most industrial facilities, nuclear power plants and other fuel-cycle facilities generate waste during their operation. The waste materials are often shipped offsite by truck, train, or in some cases by barge either for disposal or for processing. The wastes that are sent to a processing facility may be reused or recycled or they may be sent to a disposal facility after processing. The processing and handling that occur at the site of generation, including any packaging and loading of the wastes onto conveyance vehicles for shipment offsite, are considered part of the normal operations at that site, and the impacts associated with them are assessed as part of the normal operational impacts. Impacts associated with transportation and offsite processing and disposal are considered under the waste management impacts.

The primary resource that is affected by the disposal of waste materials is the land that is used for disposal. This land is assumed to be an irreversibly and irretrievably committed resource

(see Section 4.4.3). The resources that are affected during processing and disposal of the wastes are similar to the resources affected during operation of any nuclear fuel cycle facility, including the nuclear power plants. As discussed in Chapter 4, these resources include land use and visual resources, air quality and noise, geology and soils, hydrology, ecology, cultural resources, socioeconomics, human health and safety, and environmental justice. During transportation, the main resources affected are human health and safety, air quality and noise, and socioeconomics. The impact assessment methodologies and the regions of influence for these resource areas are covered in other parts of this appendix.

D.9.2 Description of Impact Assessment

Historical data and experience were used to estimate the characteristics and quantities of wastes generated at nuclear power plants. These values are discussed in the main body of this document under waste management sections (see for example Sections 3.11, 4.1.1.10, 4.1.3.10, and 4.1.4). Table S-3 in 10 CFR 51.51(b) was the main source for waste generation numbers at other nuclear fuel cycle facilities. The assessment of impacts associated with transportation of waste materials to and from a nuclear power plant relied on the information provided in Table S-4 of 10 CFR 51.52, whereas the impacts of transportation among other fuel-cycle facilities were addressed as part of Table S-3 as discussed Section 4.1.4. The impacts at the offsite processing and disposal facilities are not explicitly evaluated in this document because each of these facilities would be operated pursuant to a permit or license issued by either a Federal or State agency. The impacts at those facilities would be addressed as part of the permitting or licensing process for those facilities. All operations including disposal activities at the disposal facilities would be within the bounds of analyses conducted to obtain the facility's permit or license. For example, the waste shipped to the disposal facility would have to meet that facility's waste acceptance criteria.

The issues associated with the availability of disposal facilities for low-level waste (LLW) are discussed in Section 4.1.1.10. Section 4.1.1.10 also discusses the onsite storage of spent nuclear fuel for up to 30 years beyond the licensing term of a reactor. For all other waste types, it is assumed that permitted processing and/or disposal facilities will be available when needed. Historical evidence suggests that this assumption is valid.

Pollution prevention and waste minimization practices generally employed at the nuclear power plant sites are discussed in Section 3.11. These practices are based on the requirements placed on the licensees by the NRC, EPA, or other Federal or State agencies and the licensee's own efforts to minimize the emissions to the environment and minimize the quantities of wastes generated or sent offsite for treatment or disposal.

D.10 Alternatives

D.10.1 Identification and Evaluation of Alternative Energy Sources

To ensure that the analysis of alternative energy sources focused only on realistic options, data published by the DOE's Energy Information Administration (EIA) were used to identify the current and projected contributions made to the commercial electric power sector by various fossil fuel and renewable energy technologies. Federal and State regulations, as well as the Internet Web sites of Federal and State regulatory agencies and State coalitions were reviewed to identify current and anticipated environmental externalities that would most likely also influence alternative energy technology selections. As a result of these reviews, twelve fossil fuel technologies and eight renewable energy technologies were identified, together with a nuclear energy alternative, as likely replacements for a retiring nuclear reactor. In addition, demand-side management (DSM) and power purchases also were identified for consideration.

The environmental consequence analyses for those fossil fuel, nuclear, and renewable energy technologies selected as likely alternatives were based on data from a variety of sources. Engineering and environmental performance data for fossil fuel technologies were obtained from reports published by DOE's National Energy Technology Laboratory (NETL) and the EPA. Published environmental impact statements (EISs), regulatory guidance, and early site permit applications provided the basis for the environmental consequence analysis of the nuclear energy alternative. Reports and technology overviews published by DOE's Office of Energy Efficiency and Renewable Energy (EERE) and the National Renewable Energy Laboratory (NREL) served as the principal sources of data for environmental impacts of the selected renewable energy technologies. Resource maps developed by NREL were also used to show the geographic relationships between existing commercial nuclear power facilities and readily accessible renewable energy resources of sufficient size and quality to support utility-scale power production. Additional data regarding the environmental consequences of renewable energy technologies were obtained from EISs published by Federal and State agencies and from other sources within the open literature. Impact analyses for DSM and power purchases were supported by data from the EIA and the Federal Energy Regulatory Commission (FERC).

D.10.2 Supporting Information

Schematic diagrams of fossil energy technologies (Figures D.10-1 to D.10-12) and renewable energy technologies (Figures D.10-13 to D.10-15; D.10-20 to D.10-22; and D.10-24 to D.10-26) are presented in this section to aid in an understanding of the operational components of different energy alternatives. Many of the renewable energy technologies are not equally viable in all parts of the country because of the uneven distribution of the underlying energy source. To illustrate availability of renewable energy alternatives, resource distribution maps are also provided (Figures D.10-16 to D.10-19; D.10-23; D.10-27).

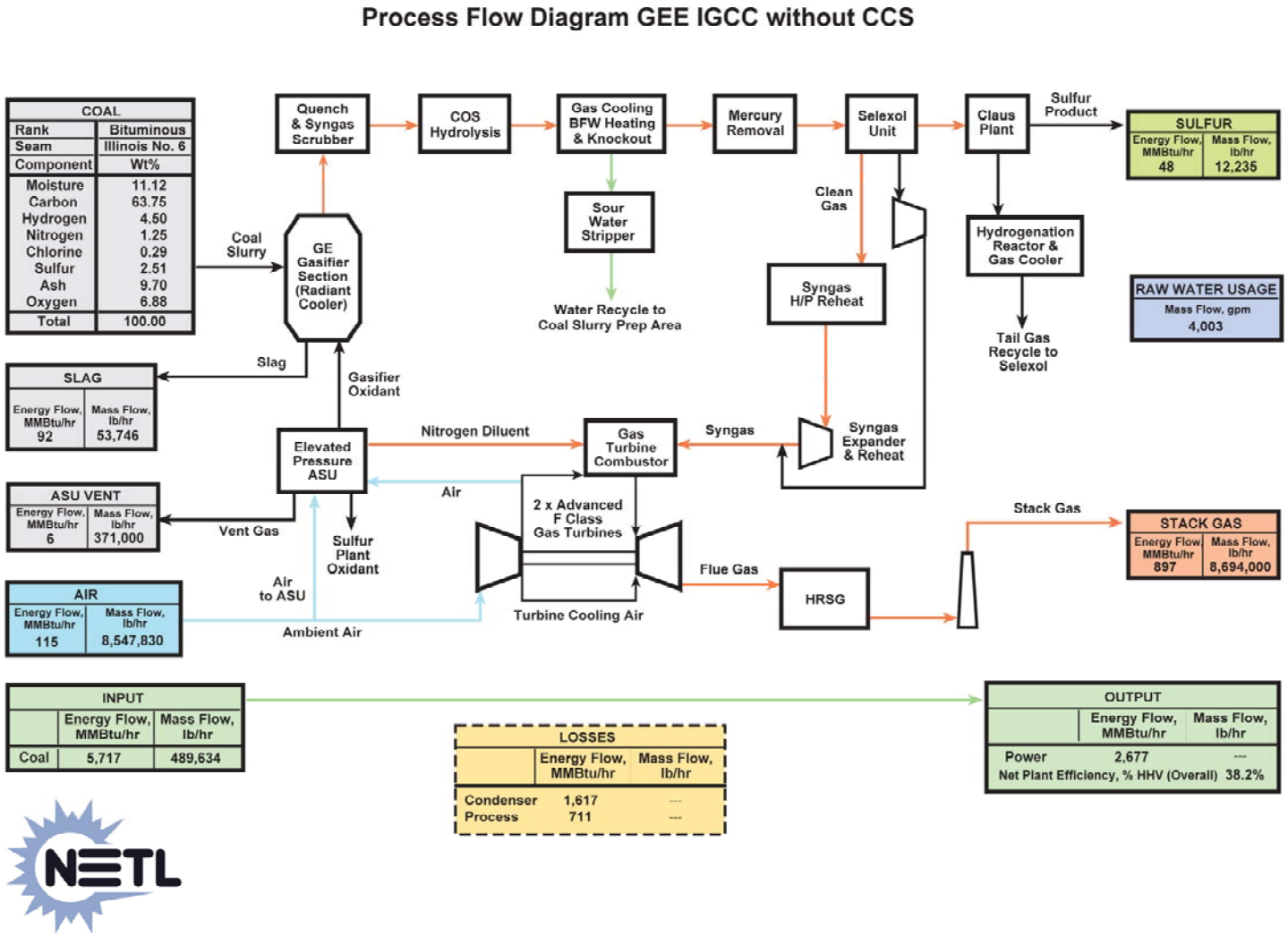

Figure D.10-1. IGCC Coal Power Plant with GE Gasifier Without CO_2 Capture (Source: NETL 2007)

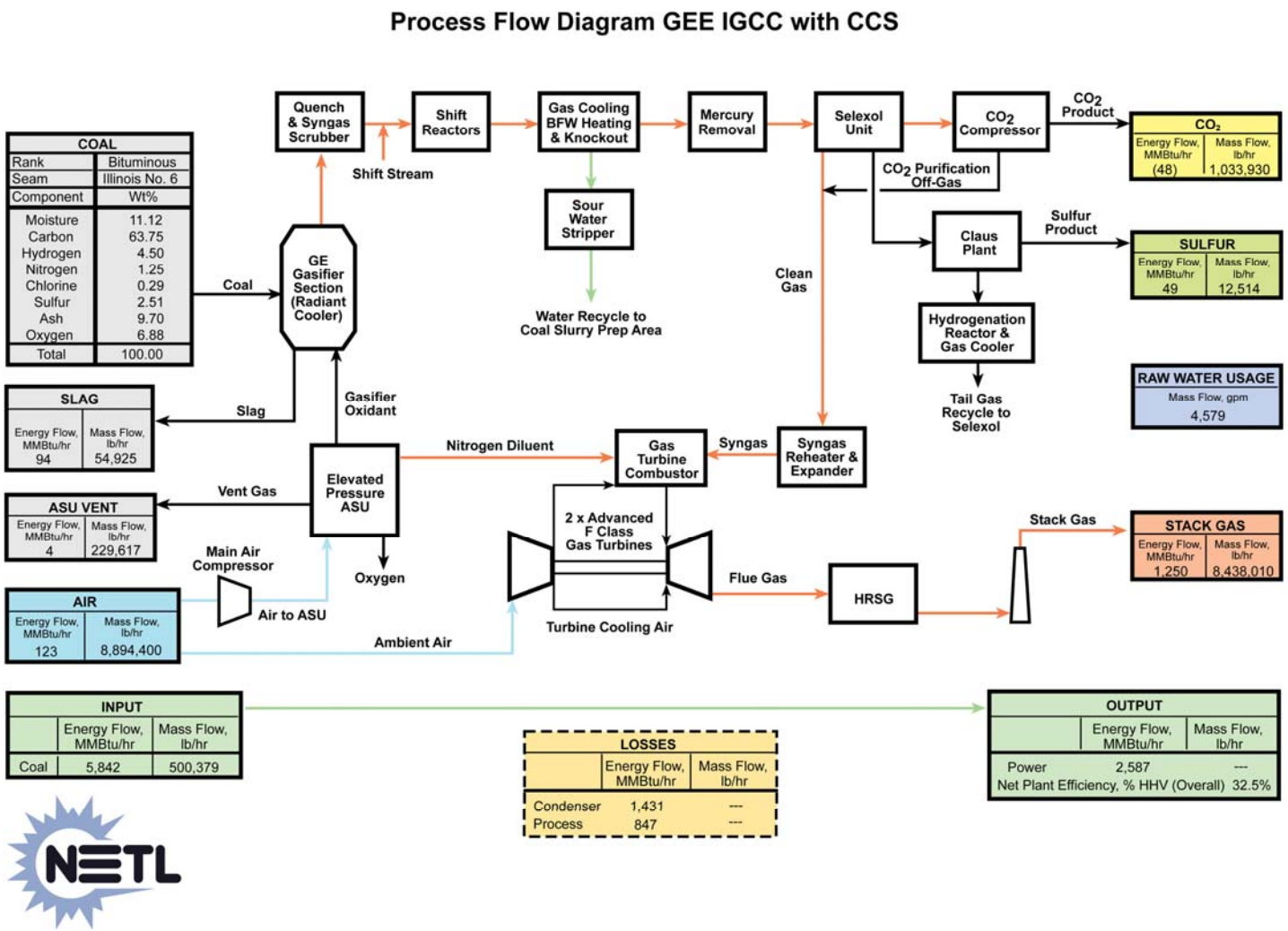

Figure D.10-2. IGCC Coal Power Plant with GE Gasifier with CO_2 Capture (Source: NETL 2007)

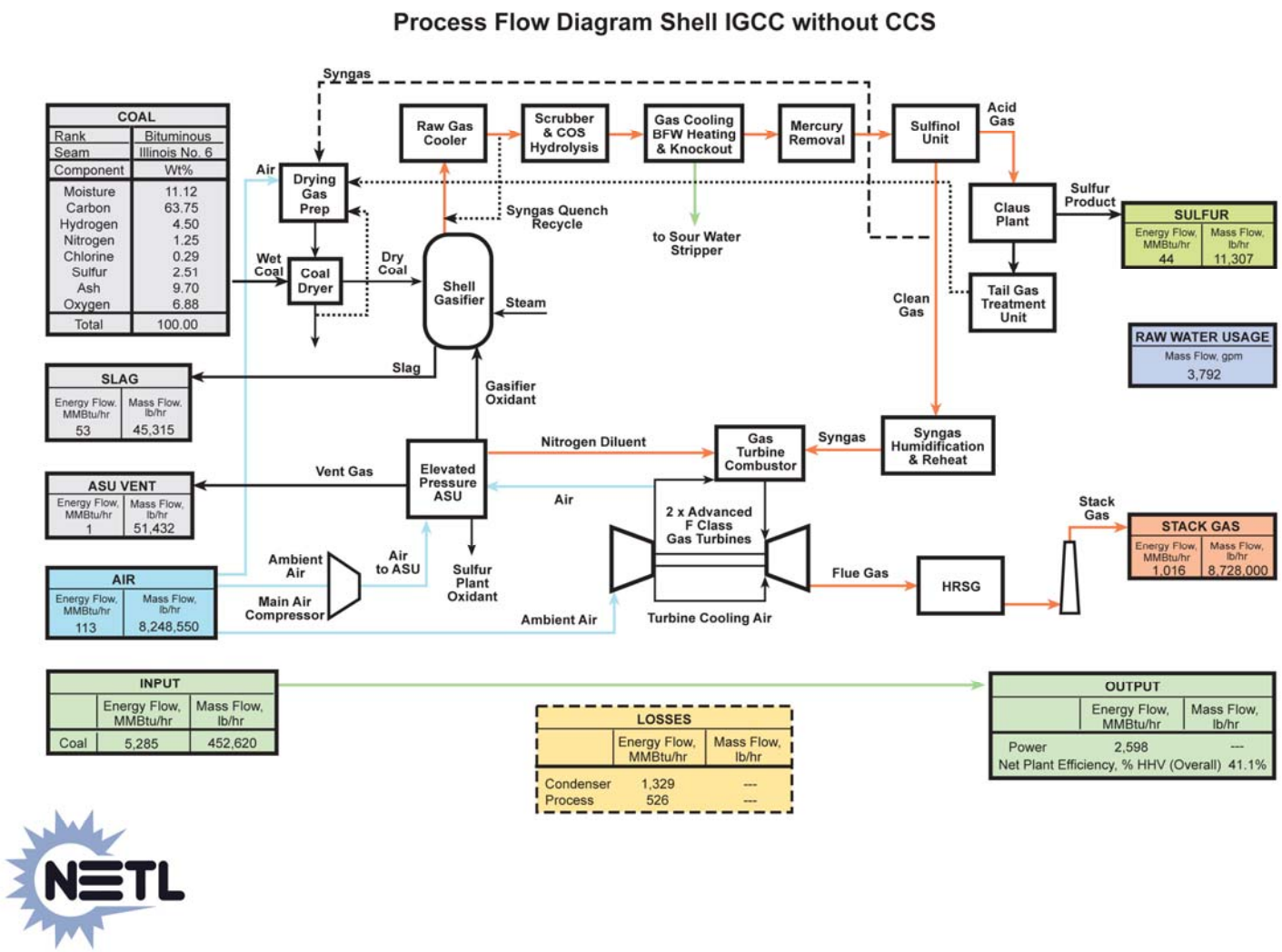

Figure D.10-3. IGCC Coal Power Plant with Shell Gasifier Without CO_2 Capture (Source: NETL 2007)

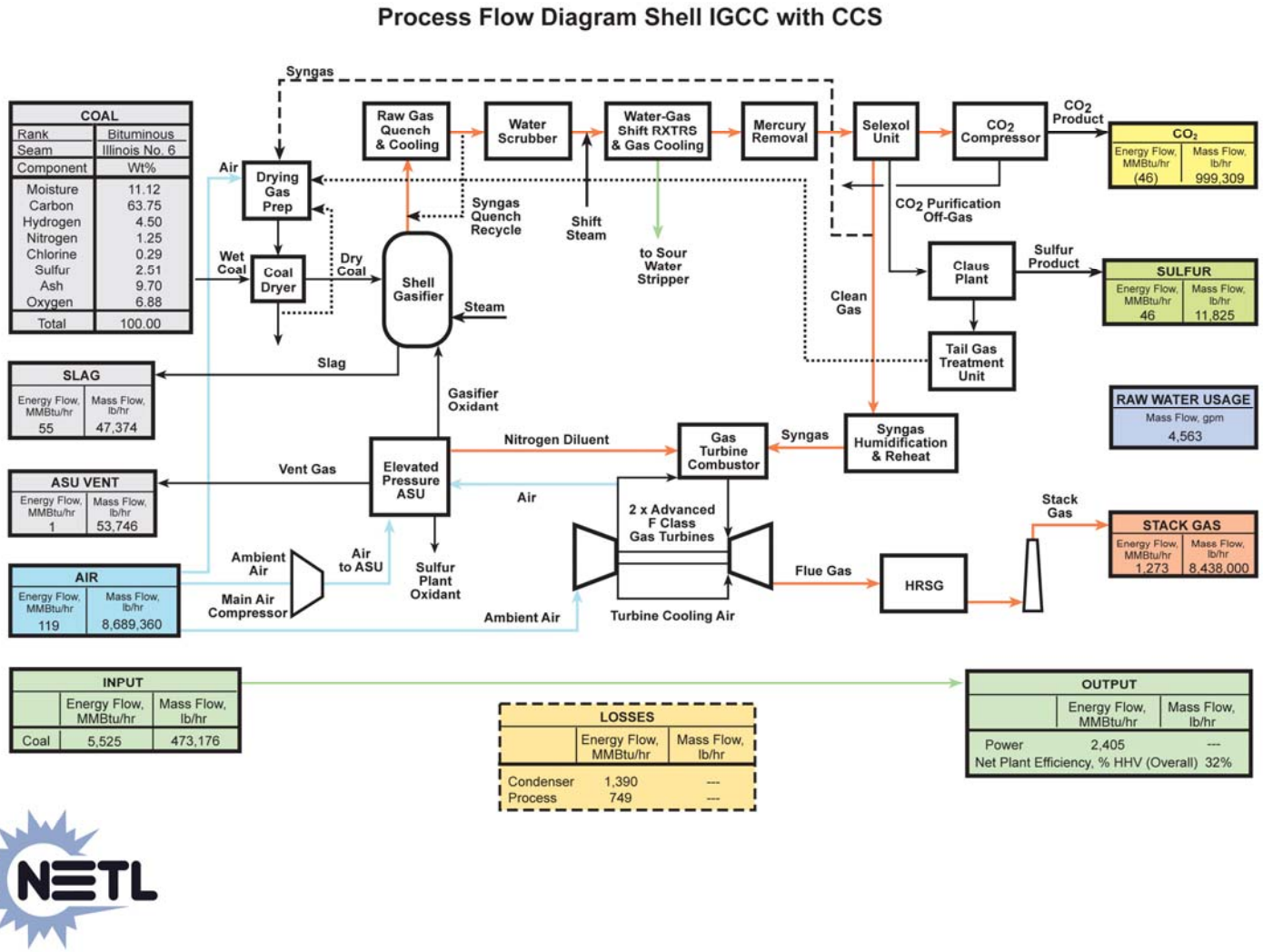

Figure D.10-4. IGCC Coal Power Plant with Shell Gasifier with CO_2 Capture (Source: NETL 2007)

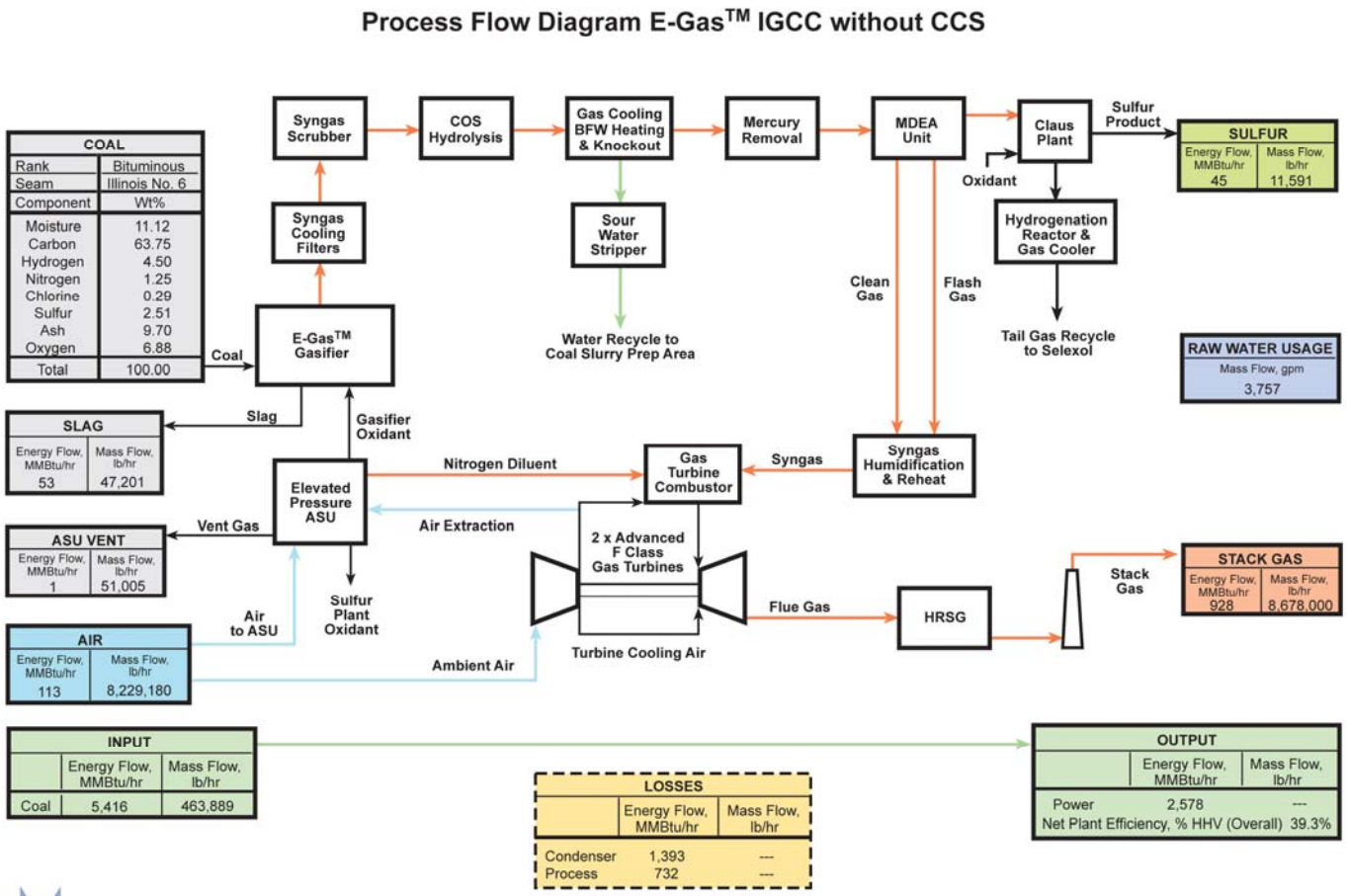

Figure D.10-5. IGCC Coal Power Plant with Conoco-Phillips (E-Gas™) Gasifier Without CO_2 Capture (Source: NETL 2007)

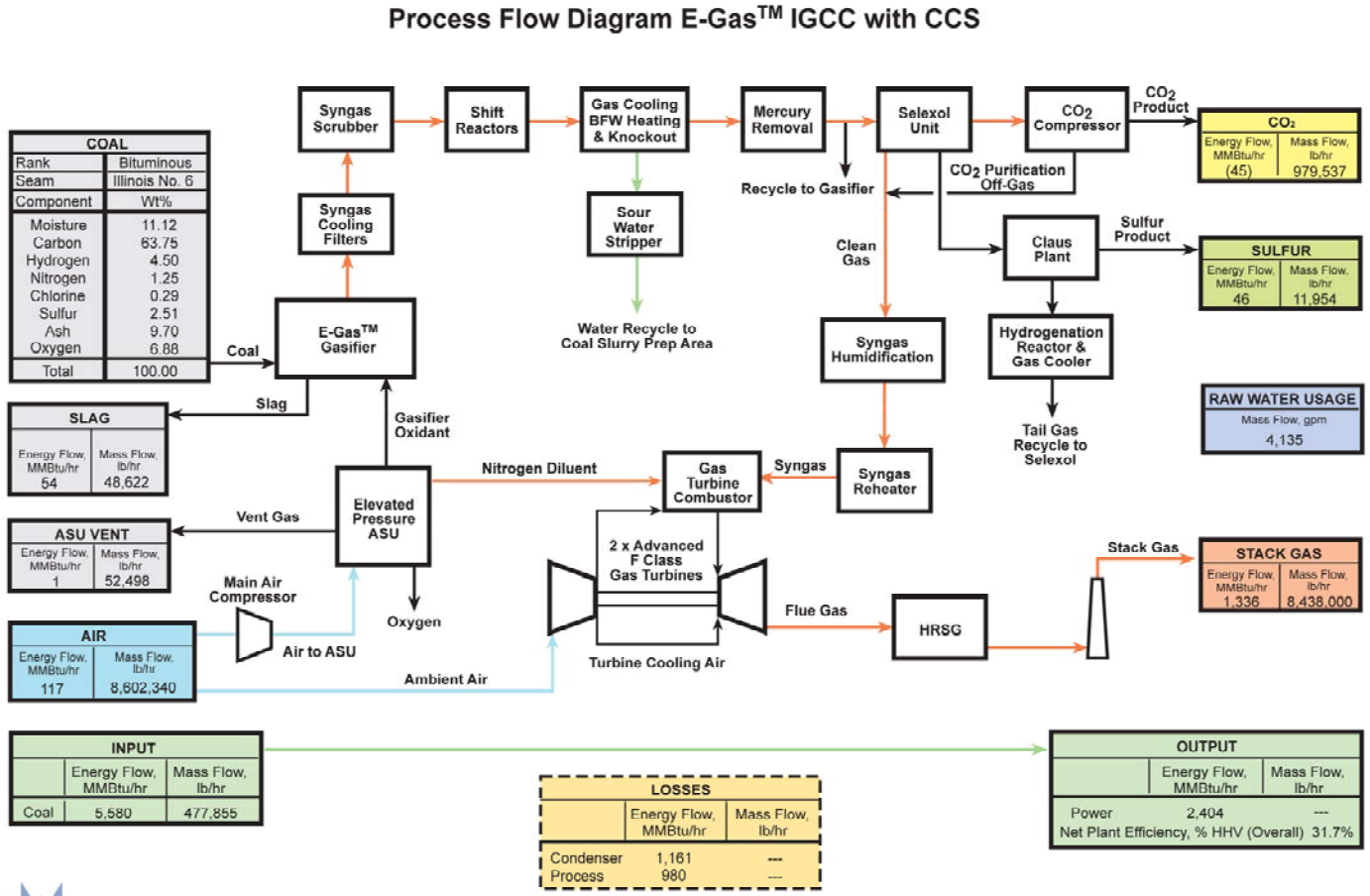

Figure D.10-6. IGCC Coal Power Plant with Conoco-Phillips (E-Gas™) Gasifier with CO_2 Capture (Source: NETL 2007)

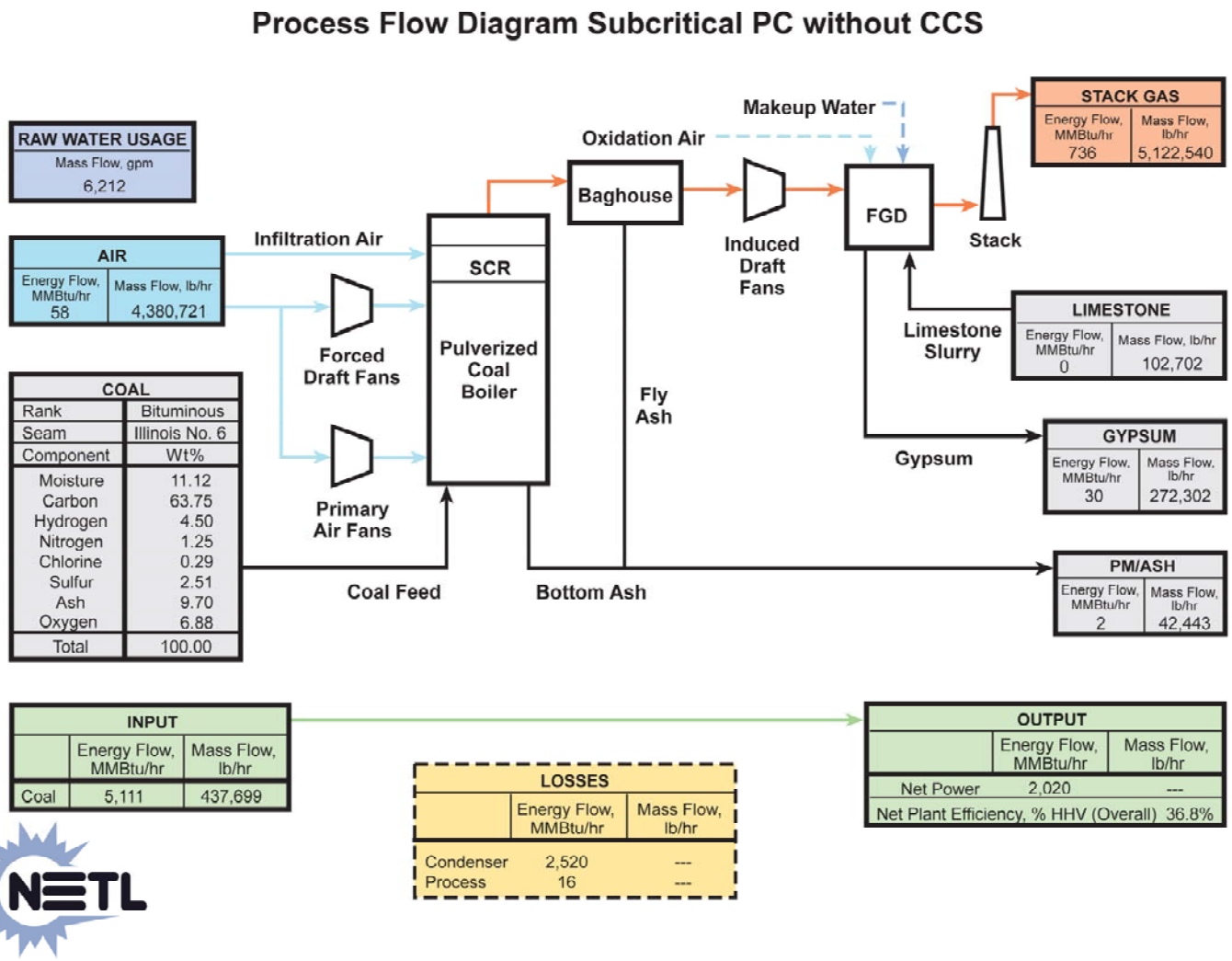

Figure D.10-7. Subcritical Pulverized Coal Power Plant Without CO_2 Capture (Source: NETL 2007)

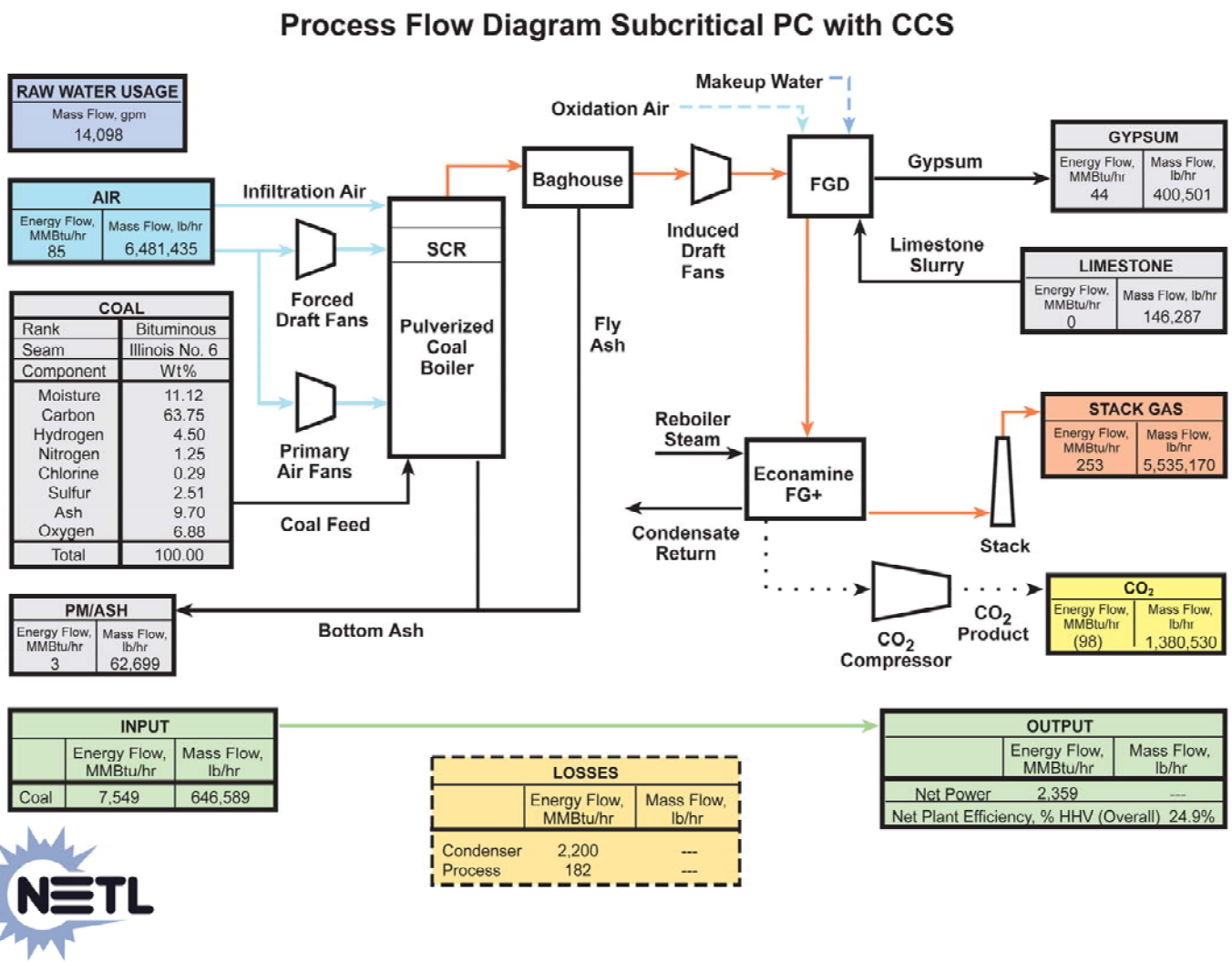

Figure D.10-8. Subcritical Pulverized Coal Power Plant with CO_2 Capture (Source: NETL 2007)

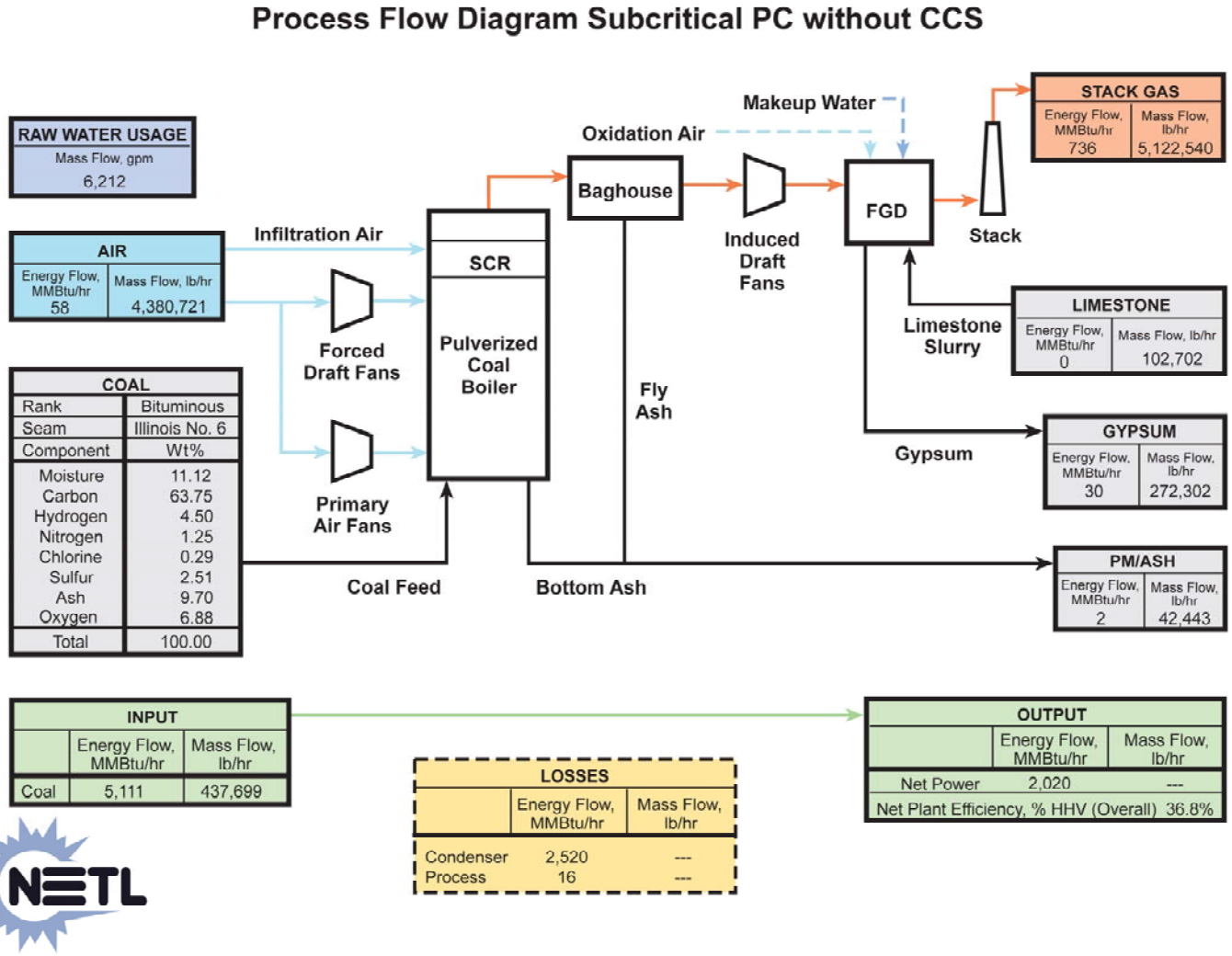

Figure D.10-9. Supercritical Pulverized Coal Power Plant Without CO_2 Capture (Source: NETL 2007)

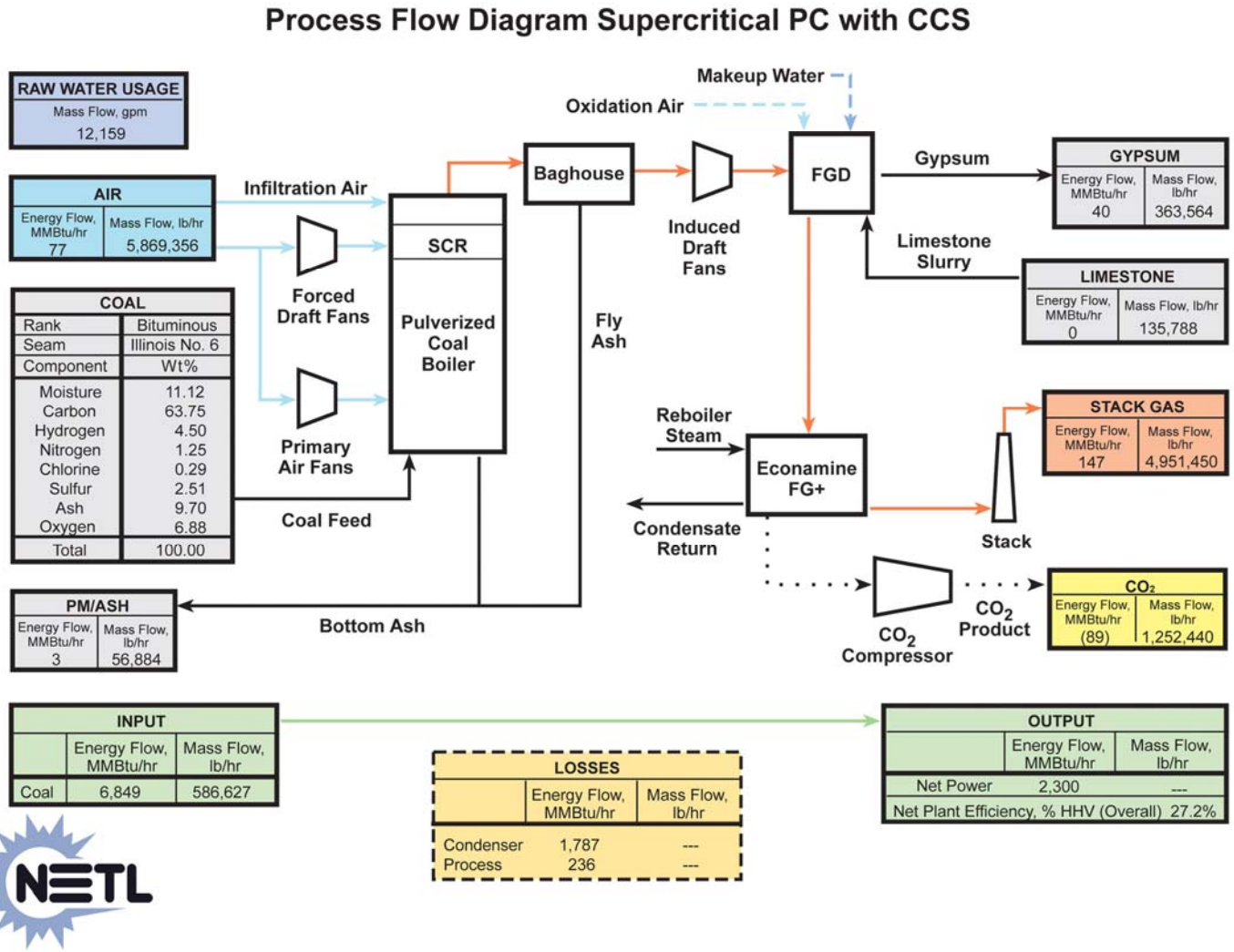

Figure D.10-10. Supercritical Pulverized Coal Power Plant with CO_2 Capture (Source: NETL 2007)

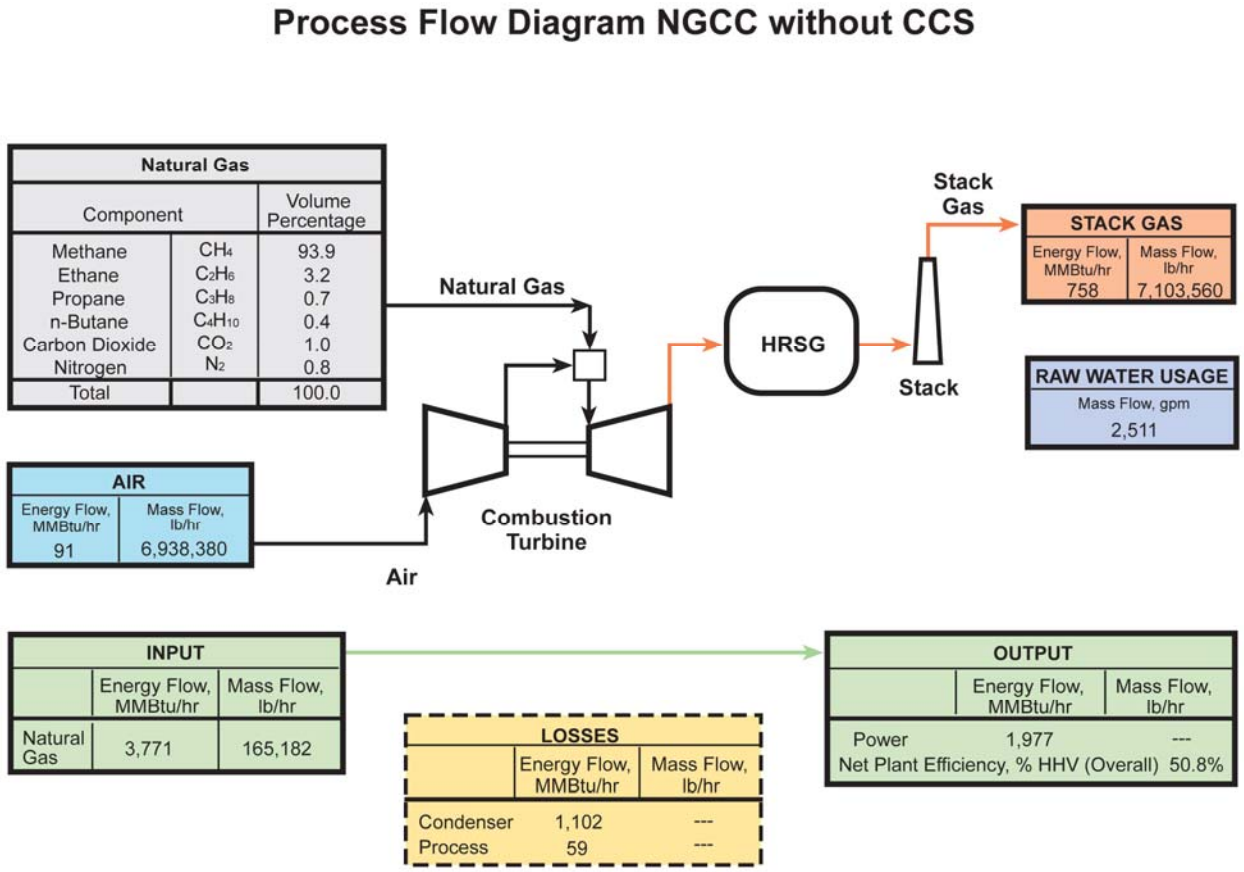

Figure D.10-11. Natural Gas IGCC Power Plant Without CO_2 Capture (Source: NETL 2007)

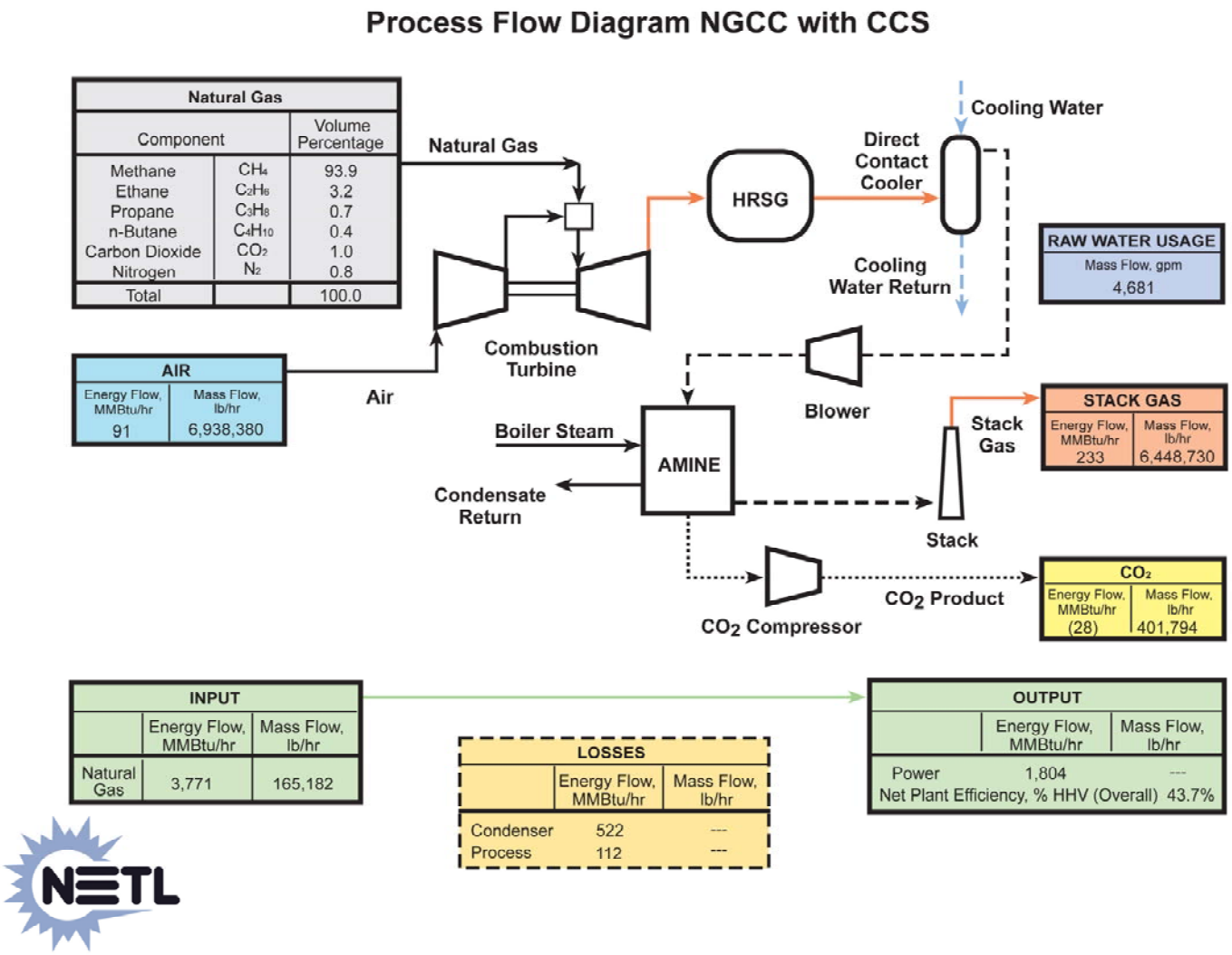

Figure D.10-12. Natural Gas IGCC Power Plant with CO_2 Capture (Source: NETL 2007)

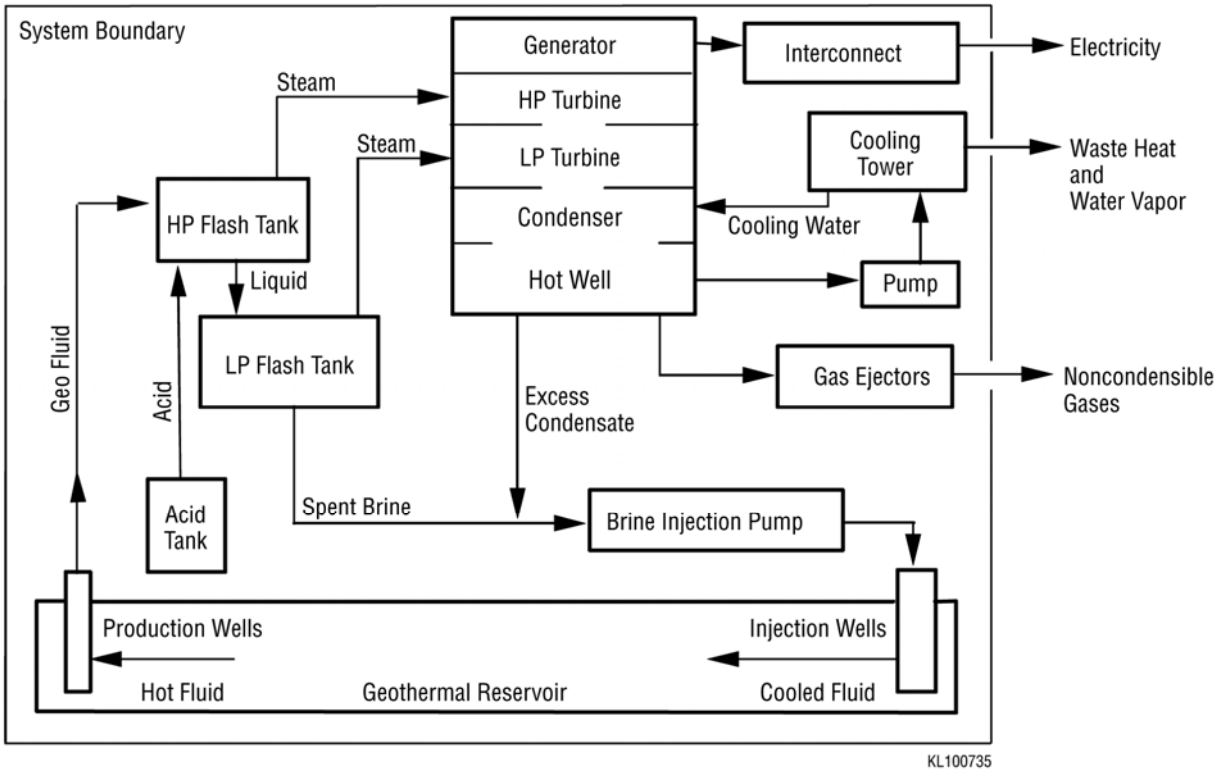

Figure D.10-13. Geothermal Hydrothermal Flashed Steam Power Plant Schematic (Source: EERE 1997)

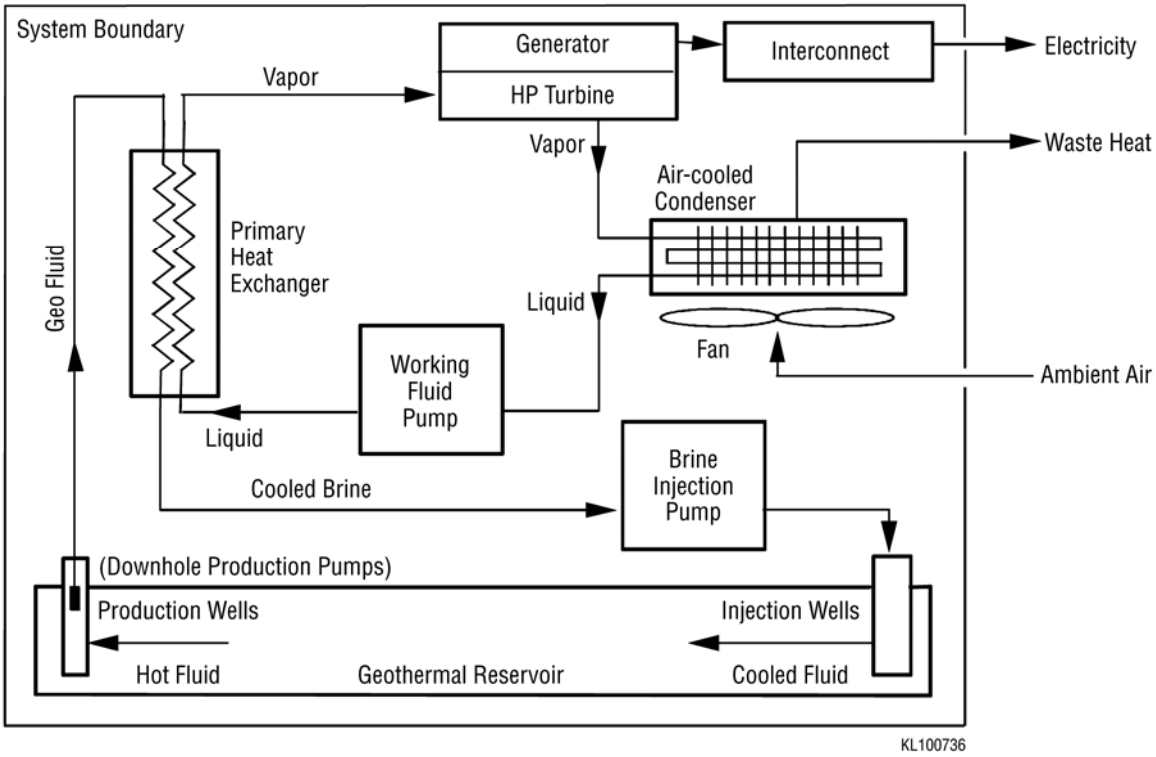

Figure D.10-14. Geothermal Hydrothermal Binary Power Plant Schematic (Source: EERE 1997)

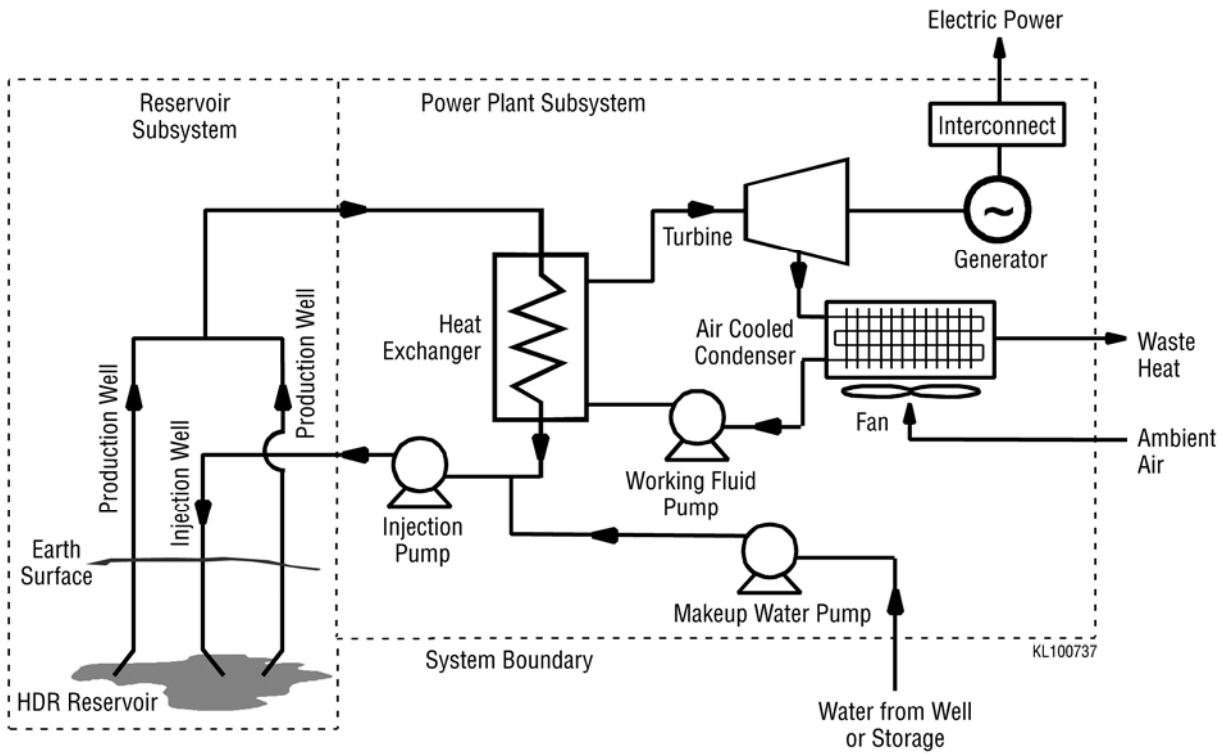

Figure D.10-15. Geothermal Hot Dry Rock Power Plant Schematic (Source: EERE 1997)

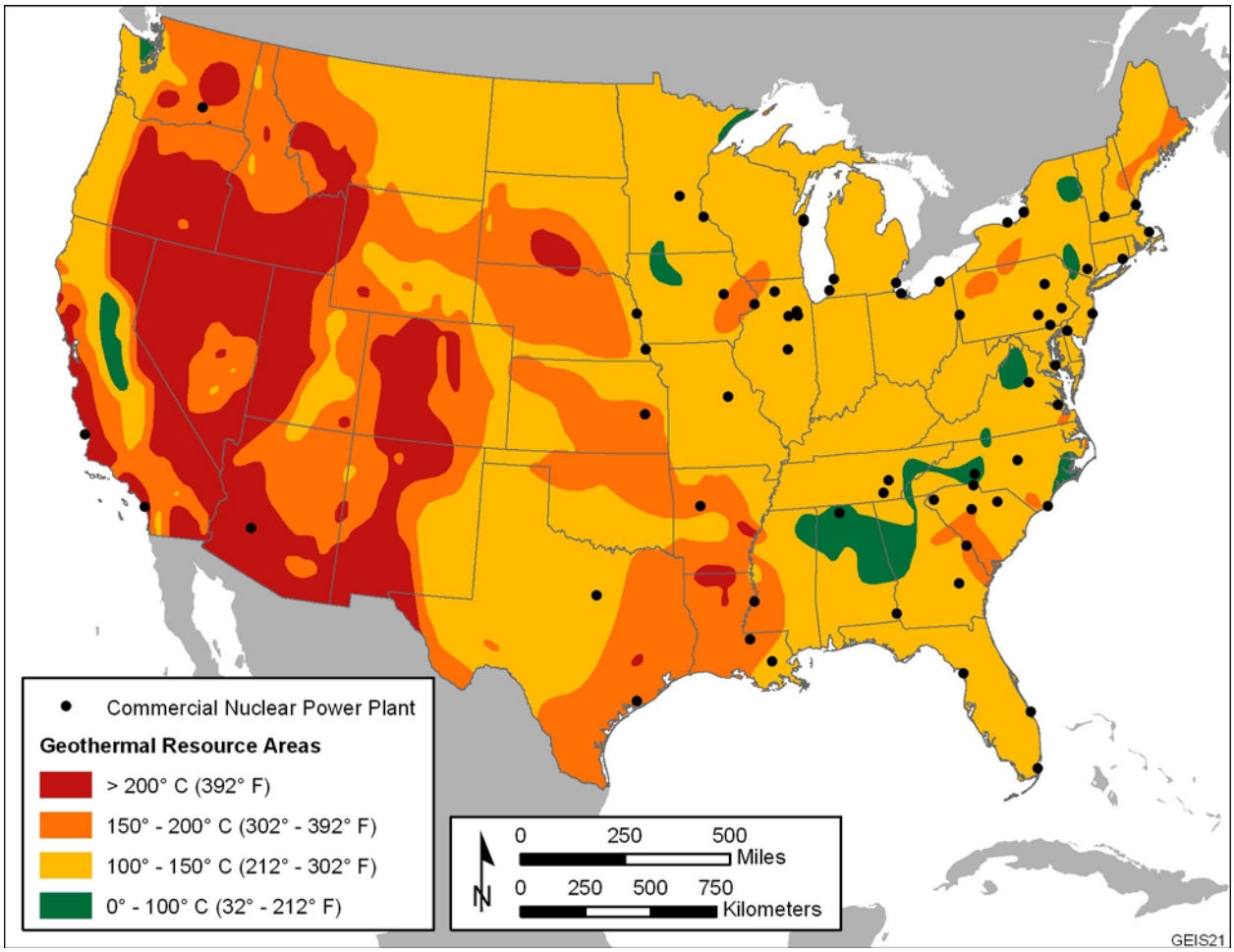

Figure D.10-16. Geothermal Resources in the 48 Contiguous United States (Source: Adapted from NREL 2007)

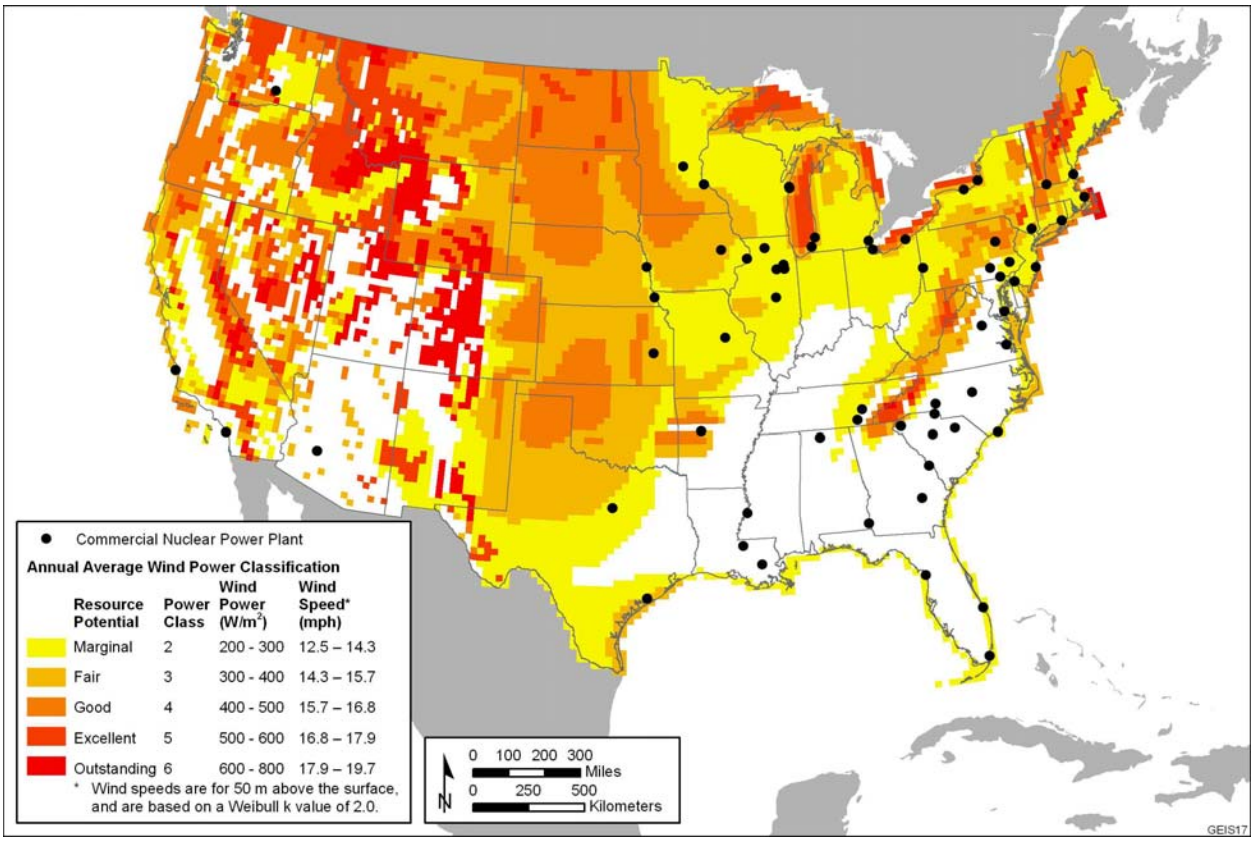

Figure D.10-17. Wind Resources in the 48 Contiguous United States (Source: Adapted from NREL 2007)

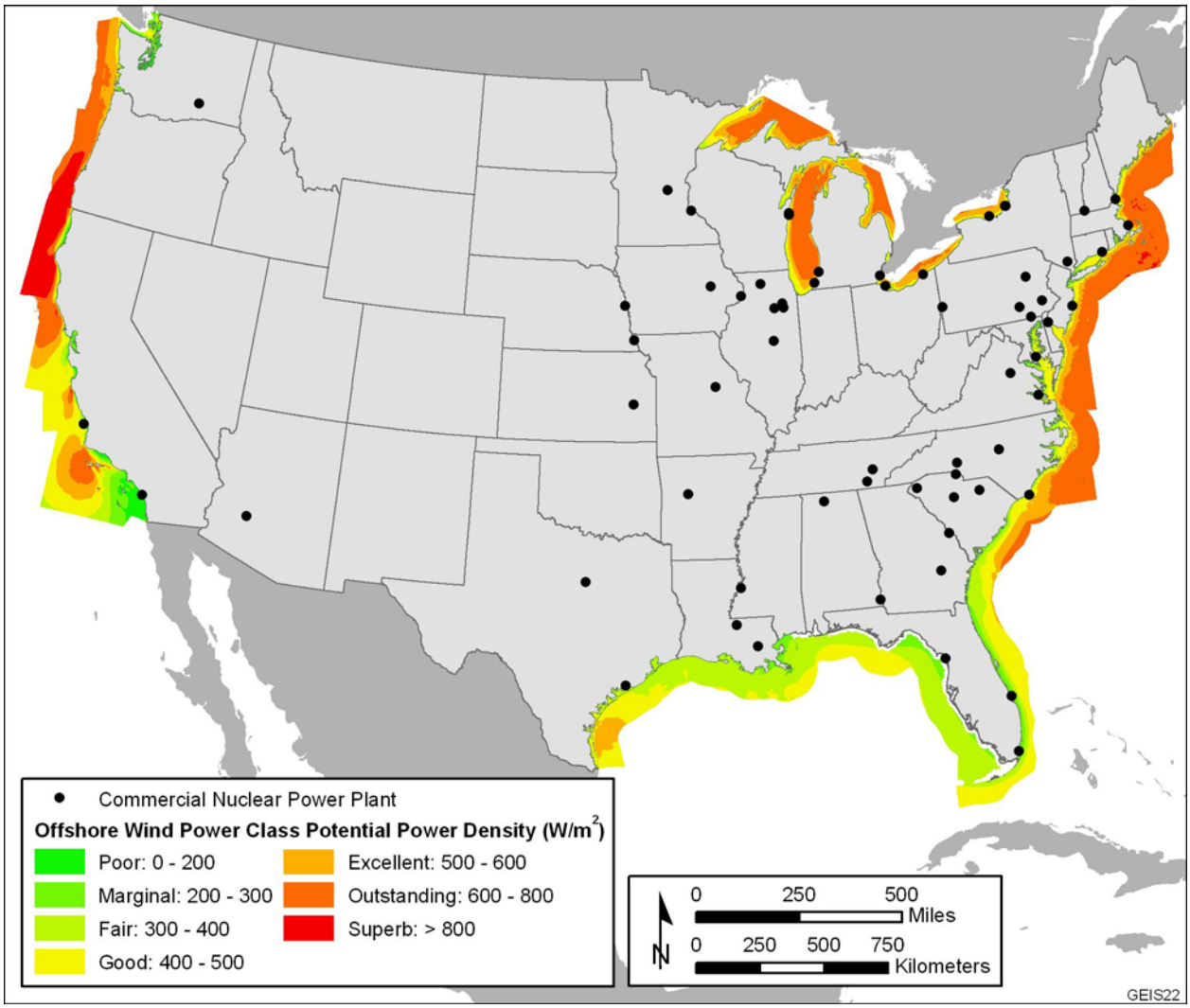

Figure D.10-18. Wind Resources in Offshore Areas of the 48 Contiguous United States (Source: Adapted from NREL 2007)

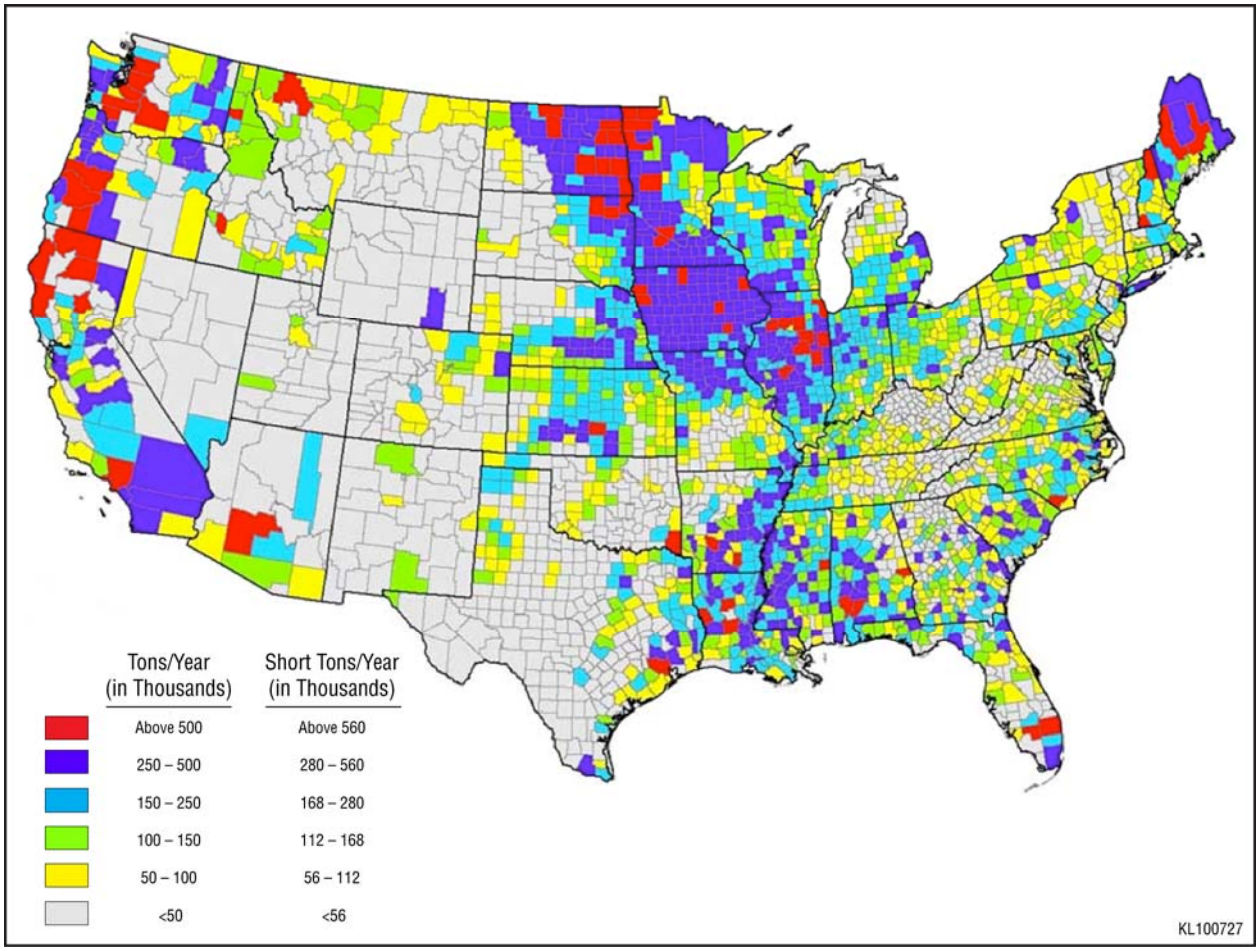

Figure D.10-19. Biomass Resources in the 48 Contiguous United States (Source: Adapted from NREL 2007)

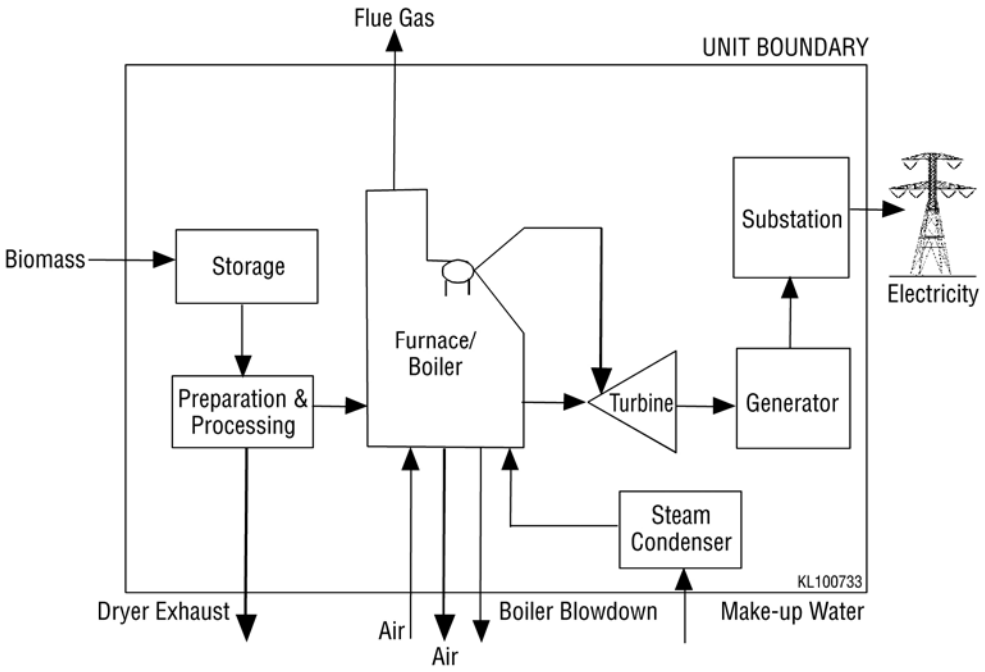

Figure D.10-20. Direct-Fire Biomass Power Plant Schematic (Source: EERE 1997)

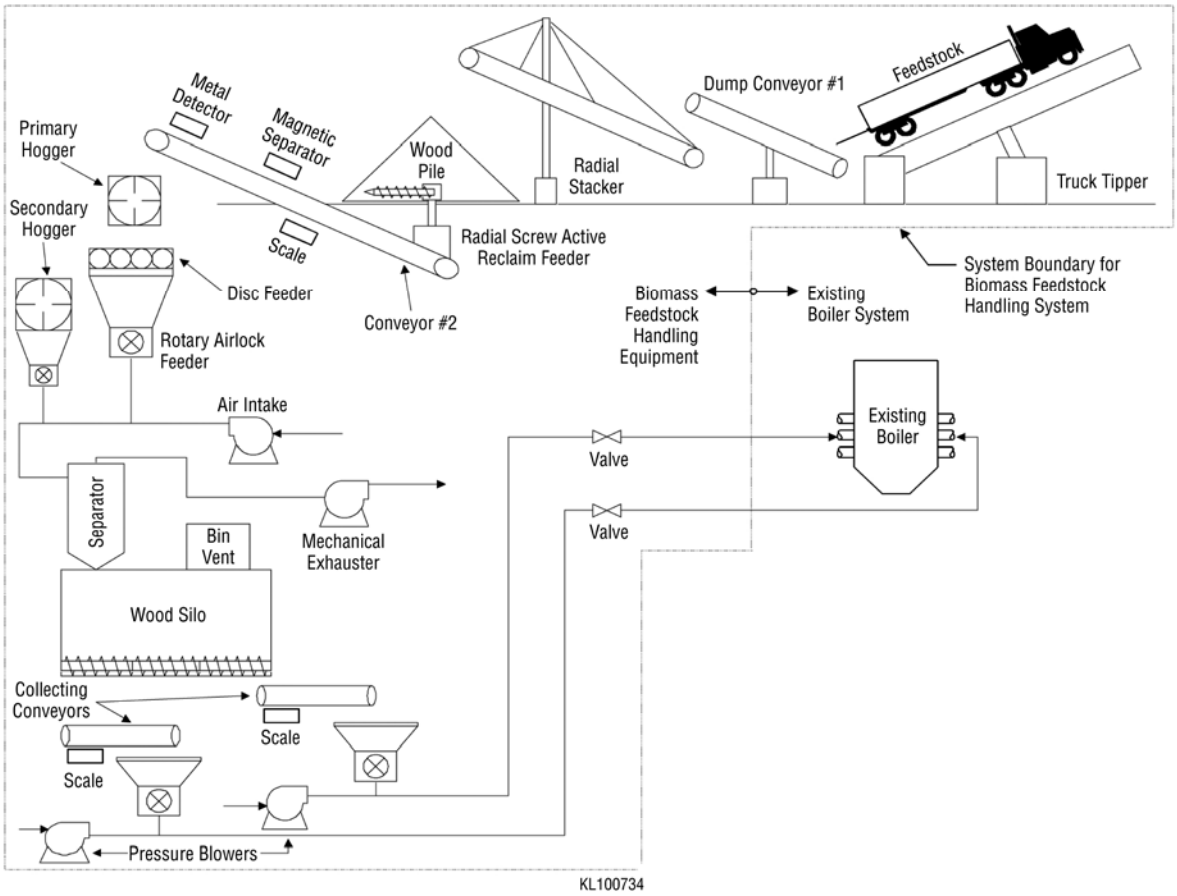

Figure D.10-21. Biomass-Coal Co-Fire Power Plant Schematic (Source: EERE 1997)

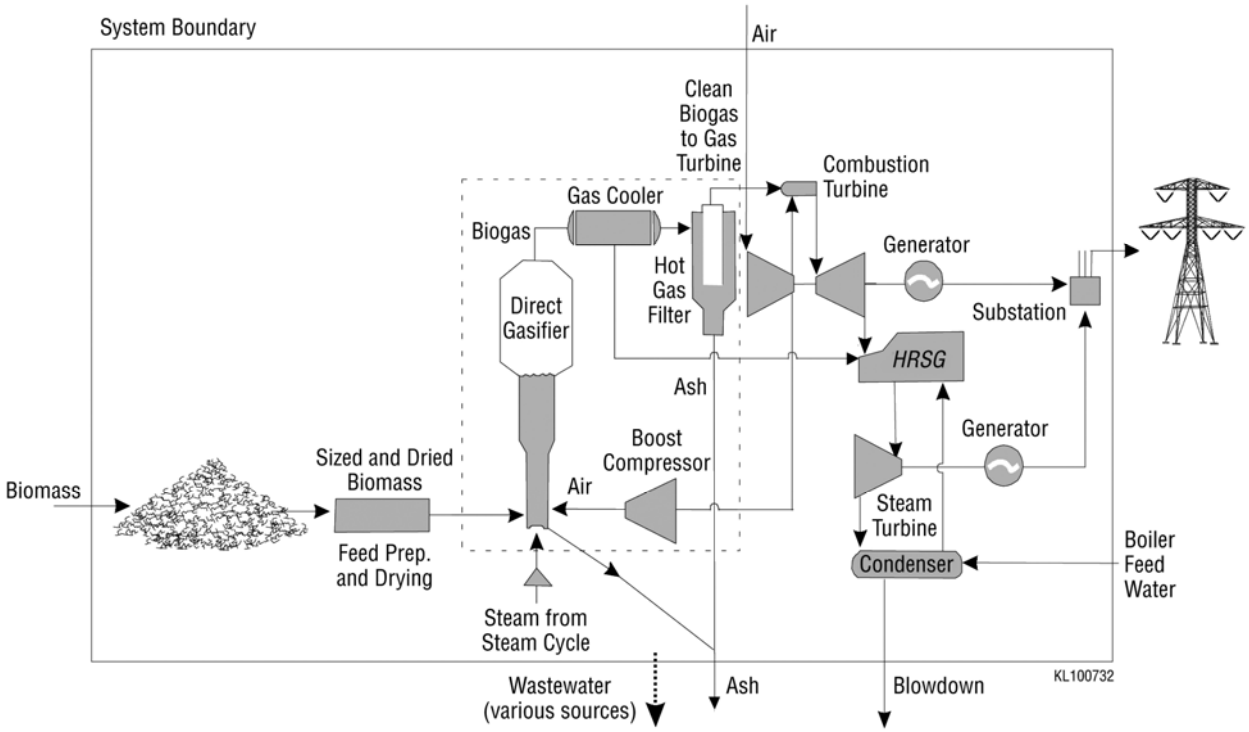

Figure D.10-22. Biomass Gasification Power Plant Schematic (Source: EERE 1997)

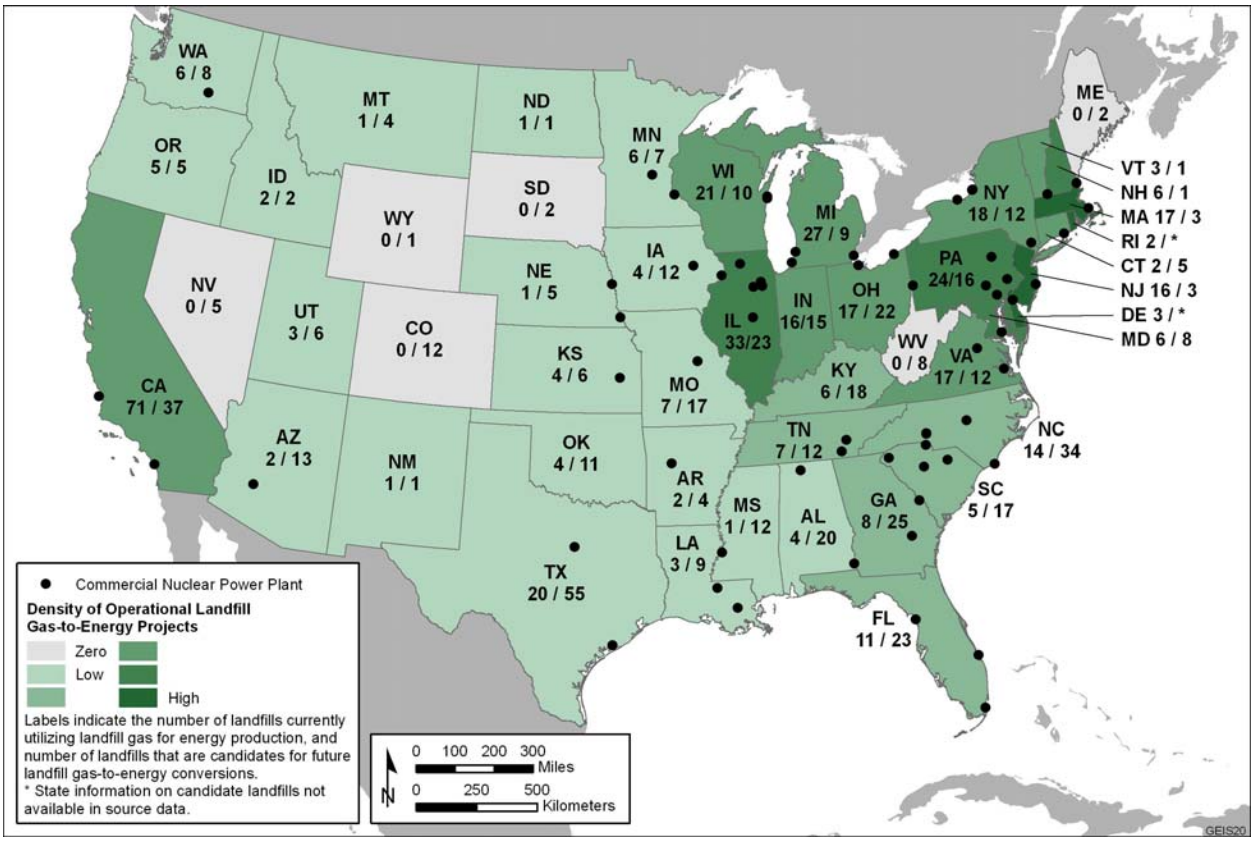

Figure D.10-23. Landfills Currently Enrolled in and Candidate Landfills for Landfill Gas-to-Energy Programs (Source: EPA 2007c)

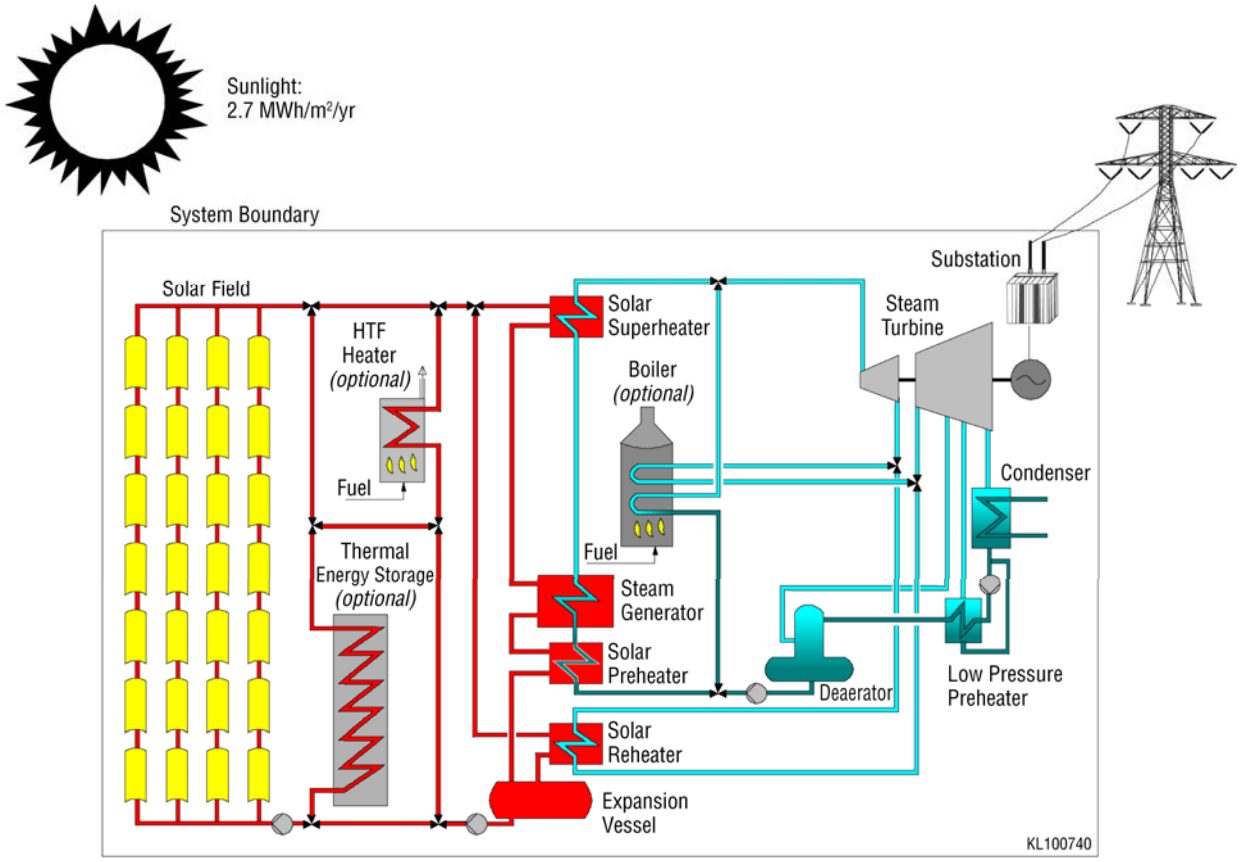

Figure D.10-24. Solar Thermal Power Trough Power Plant Schematic (Source: EERE 1997)

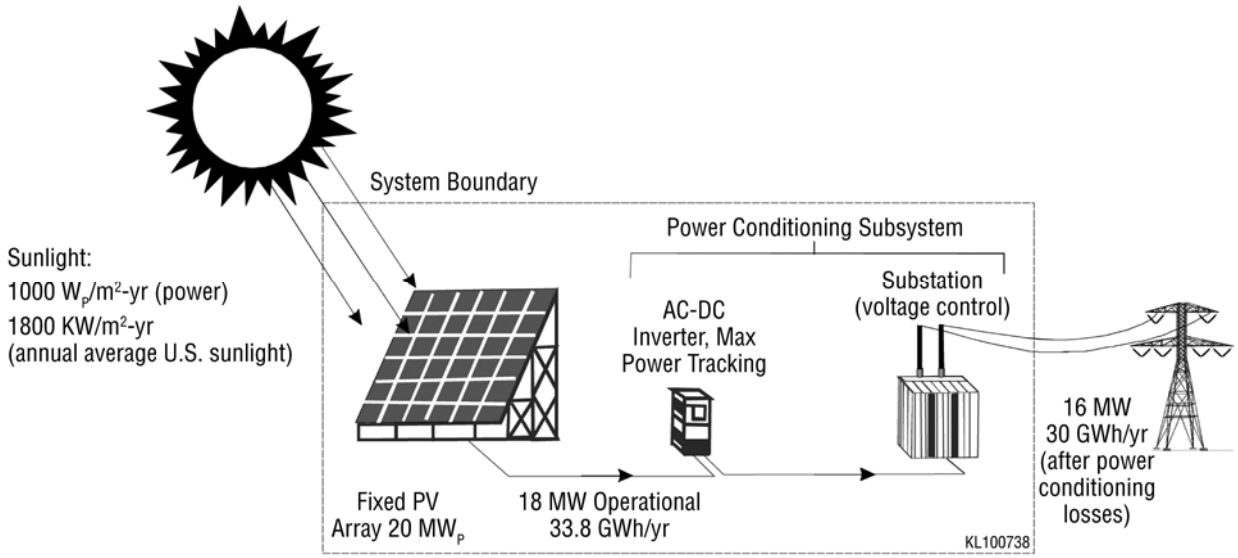

Figure D.10-25. Solar Photovoltaic Fixed Flat Plate Power Plant Schematic (Source: EERE 1997)

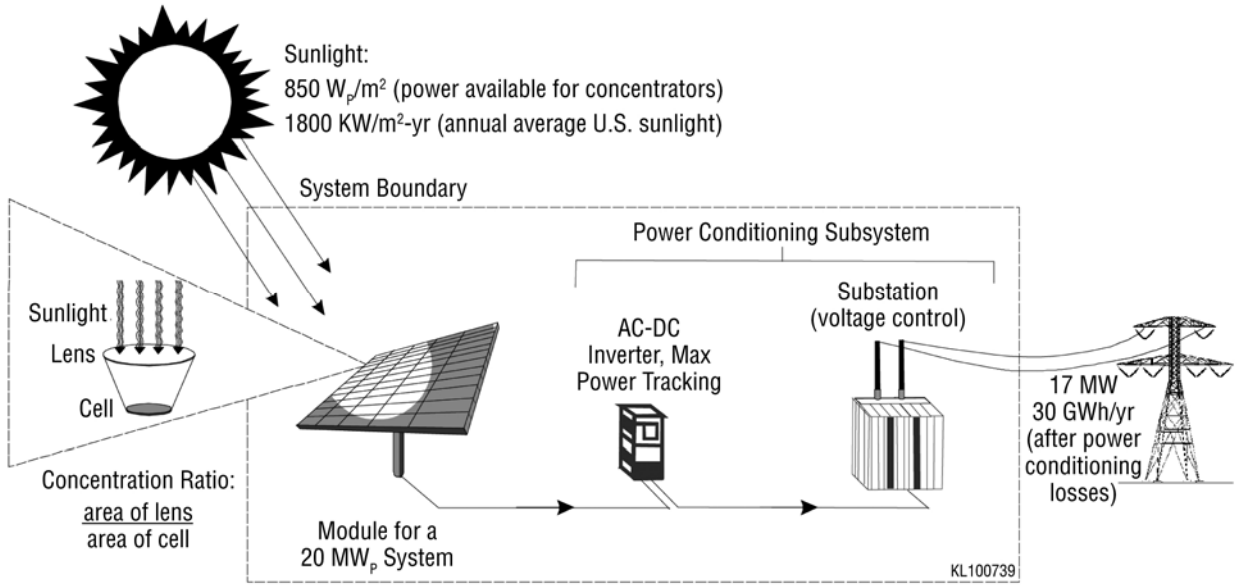

Figure D.10-26. Solar Photovoltaic Flat Plate with Concentrating Mirror Power Plant Schematic (Source: EERE 1997)

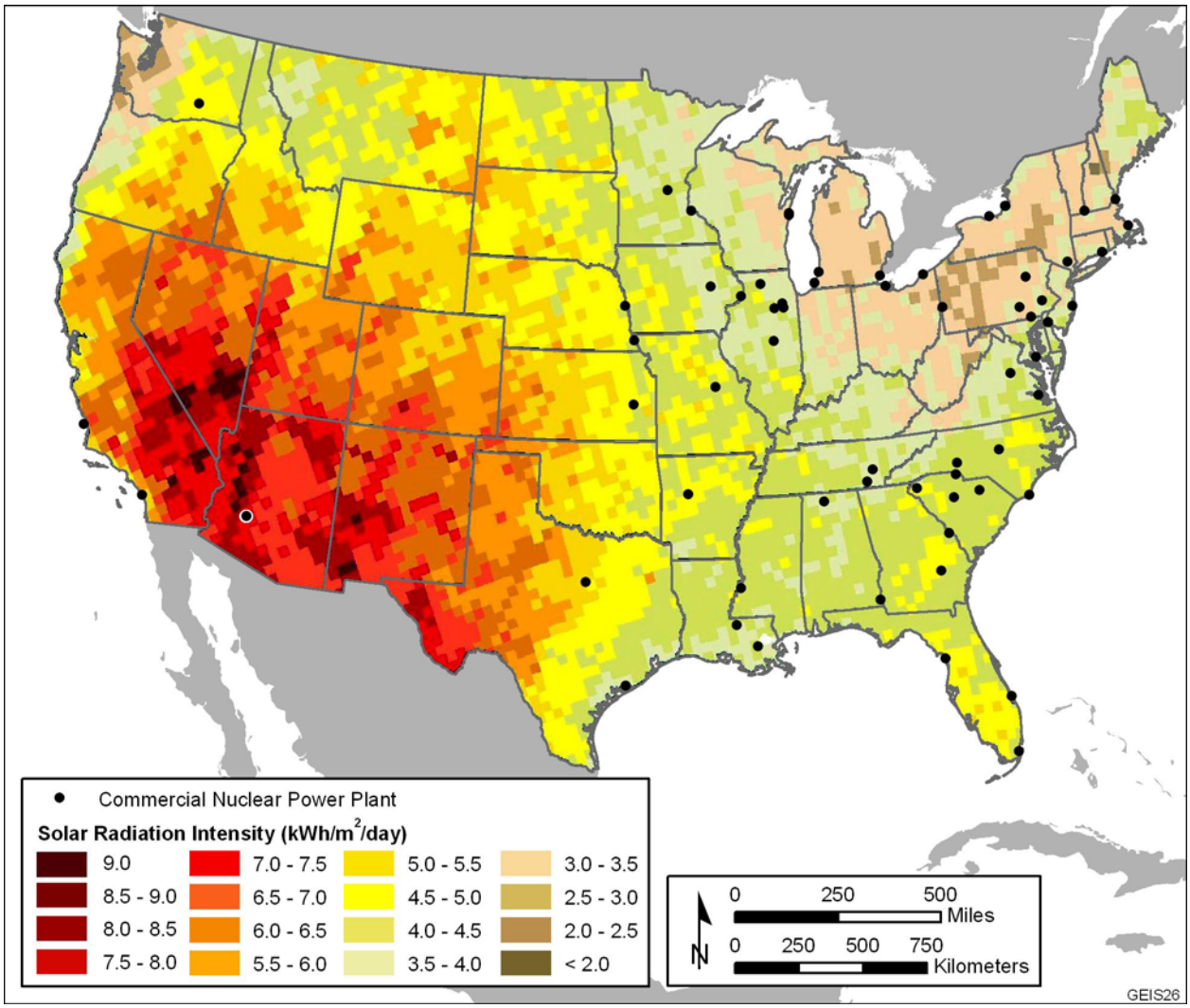

Figure D.10-27. Solar Radiation Intensity in the 48 Contiguous United States (flat plate collectors with two-axis tracking capability) (Source: Adapted from NREL 2007)

D.11 REFERENCES

Advisory Committee on the Biological Effects of Ionizing Radiation (BEIR). 1990. *BEIR-V, Health Effects of Exposure to Low Levels of Ionizing Radiation*, National Research Council, Advisory Committee on the Biological Effects of Ionizing Radiation, National Academy of Sciences, Washington, D.C.

Advisory Committee on the Biological Effects of Ionizing Radiation (BEIR). 2006. *Health Risk from Exposure to Low Levels of Ionizing Radiation*. BEIR-VII, National Research Council, National Academy of Sciences, Washington, D.C.

Burrows, S., and D.A. Hagemeyer. 2006. *Occupational Radiation Exposure at Commercial Nuclear Power Reactors and Other Facilities 2005*. NUREG-0713, U.S. Nuclear Regulatory Commission. (December).

Commission for Environmental Cooperation (CEC). 1997. *Ecological Regions of North America, Toward a Common Perspective*.

Commission for Environmental Cooperation (CEC). 2006. *Ecoregions of North America, Level 1*. U.S. Environmental Protection Agency, Western Ecology Division. Available URL: http://www. epa.gov/wed/pages/ecoregions/na_eco.htm#Level%20I (Accessed November 6, 2007).

Council on Environmental Quality (CEQ). 1997. *Environmental Justice: Guidance Under the National Environmental Policy Act*. Executive Office of the President, Washington, D.C.

Cowardin, L., V. Carter, F. Golet, and E. LaRoe. 1979. *Classification of Wetlands and Deepwater Habitats of the United States, Office of Biological Services.* FWS/OBS-79/31, U.S. Fish and Wildlife Service, U.S. Department of the Interior.

Energy Efficiency and Renewable Energy (EERE). 1997. *Renewable Energy Technology Characterizations*. Topical Report TR-109496, U.S. Department of Energy, Office of Utility Technologies, Washington, D.C. (December). Available URL: http://www1.eere.energy.gov/ba/pba/tech_characterizations.html (Accessed November 1, 2007).

Executive Order 12898. 1994. “Federal Actions to Address Environmental Justice in Minority and Low-Income Populations.” *Federal Register* 59(32). (February 16).

International Commission on Radiological Protection (ICRP). 1977. *Recommendations of the International Commission on Radiological Protection.* Publication 26, Pergamon Press, Oxford, U.K.

International Commission on Radiological Protection (ICRP). 1991. *1990 Recommendations of the International Commission on Radiological Protection*. ICRP Publication 60, Pergamon Press, Oxford, England.

National Council on Radiation Protection and Measurement (NCRP). 1993. *Risk Estimates for Radiation Protection*. Report No. 115, Bethesda, Maryland. (December 31).

National Energy Technology Laboratory (NETL). 2007. *Cost and Performance Baseline for Fossil Energy Plants*. DOE/NETL2007/1281, Vol. 1, Final Report, Pittsburgh, Pennsylvania. (May).

National Renewable Energy Laboratory (NREL). 2007. *Renewable Resources Maps & Data*. Available URL: http://www.nrel.gov/renewable_resources (Accessed November 8, 2007).

Nuclear Energy Institute (NEI). 2003. *Economic Benefits of Millstone Power Station: An Economic Impact Study by the Nuclear Energy Institute*. (July).

Nuclear Energy Institute (NEI). 2004a. *Economic Benefits of Diablo Canyon Power Plant: An Economic Impact Study by the Nuclear Energy Institute in Cooperation with Pacific Gas and Electric Company*. (February).

Nuclear Energy Institute (NEI). 2004b. *Economic Benefits of Indian Point Energy Center: An Economic Impact Study by the Nuclear Energy Institute.* (April).

Nuclear Energy Institute (NEI). 2004c. *Economic Benefits of the Duke Power-Operated Nuclear Power Plants: An Economic Impact Study by the Nuclear Energy Institute*. (December).

Nuclear Energy Institute (NEI). 2004d. *Economic Benefits of Palo Verde Nuclear Generating Station: An Economic Impact Study by the Nuclear Energy Institute*. (November).

Nuclear Energy Institute (NEI). 2005a. *Economic Benefits of Three Mile Island Unit 1: An Economic Impact Study by the Nuclear Energy Institute*. (November).

Nuclear Energy Institute (NEI). 2005b. *Economic Benefits of Wolf Creek Generating Station: An Economic Impact Study by the Nuclear Energy Institute*. (July).

Nuclear Energy Institute (NEI). 2006a. *Economic Benefits of Grand Gulf Nuclear Station : An Economic Impact Study by the Nuclear Energy Institute in Cooperation with Entergy*. (December).

Nuclear Energy Institute (NEI). 2006b. *Economic Benefits of the Exelon Pennsylvania Nuclear Fleet: An Economic Impact Study by the Nuclear Energy Institute*. (August).

Nuclear Energy Institute (NEI). 2006c. *Economic Benefits of PPL Susquehanna Nuclear Power Plant: An Economic Impact Study by the Nuclear Energy Institute in Cooperation with PPL Corporation*. (November).

Nuclear Energy Institute (NEI). 2007. *Industry Ground Water Protection Initiative – Final Guidance Document: NEI 07-07 [Final]*. Washington, D.C. Available URL: http://adams websearch2.nrc.gov/idmws/doccontent.dll?library=PU_ADAMS^PBNTAD01&ID=072670589 (Accessed November 5, 2007).

United Nations Scientific Committee on the Effects of Atomic Radiation (UNSCEAR). 2000. *Sources and Effects of Ionizing Radiation: UNSCEAR 2000 Report to the General Assembly, with Scientific Annexes. Vol. II: Effects*. New York, New York. Available URL: http://www. unscear.org/unscear/en/publications/2000_1.html (Accessed January 31, 2008).

U.S. Department of Energy (DOE). 2002. *A Graded Approach for Evaluating Radiation Doses to Aquatic and Terrestrial Biota*. DOE Voluntary Consensus Technical Standard DOE-STD-1153-2002, Washington, D.C.

U.S. Department of Energy (DOE). 2004. *RESRAD-BIOTA: A Tool for Implementing a Graded Approach to Biota Dose Evaluation, User's Guide, Version 1*. DOE/EH-0676, ISCORS Technical Report 2004-02, Interagency Steering Committee on Radiation Standards, Office of Air, Water and Radiation Protection Policy and Guidance, Washington, D.C. (January). Available URL: http://web.ead.anl.gov/resrad/documents/RESRAD-BIOTA_Manual_ Version_1.pdf (Accessed November 26, 2007).

U.S. Environmental Protection Agency (EPA). 1999. *Cancer Risk Coefficients for Environmental Exposure to Radionuclides*. Federal Guidance Report No. 13, EPA 402-R-99-001, Office of Radiation and Indoor Air, Washington, D.C. (September).

U.S. Environmental Protection Agency (EPA). 2007a. *Nonattainment Shape Files*. Personal Communication from T. Rosendahl and J. Cakir, U.S. Environmental Protection Agency, Research Triangle Park, North Carolina, to M. Lazaro, Argonne National Laboratory, Argonne, Illinois. (September).

U.S. Environmental Protection Agency (EPA). 2007b. *Level III Ecoregions of the Conterminous United States*. National Health and Environmental Effects Research Laboratory. (Revised March 2007; Updated October 2, 2007). Available URL: http://www.epa.gov/wed/pages/ecoregions/level_iii.htm (Accessed November 6, 2007).

U.S. Environmental Protection Agency (EPA). 2007c. *Basic Information*, *Landfill Methane Outreach Program*. Washington, D.C. Available URL: http://www.epa.gov/landfill/overview.htm (Accessed November 8, 2007).

U.S. Fish and Wildlife Service (USFWS). 2007. *National Wetlands Inventory*. U.S. Department of the Interior. Available URL: http://wetlandsfws.er.usgs.gov/NWI/index.html (Accessed November 7, 2007).

U.S. Geological Survey (USGS). 2003. *National Land Cover Database*. Sioux Falls, South Dakota.

U.S. Nuclear Regulatory Commission (NRC). 1977a. *Estimating Aquatic Dispersion of Effluents from Accidental and Routine Reactor Releases for the Purpose of Implementing Appendix I*. Regulatory Guide 1.113, Revision 1, Office of Standards Development. (April).

U.S. Nuclear Regulatory Commission (NRC). 1977b. *Method of Estimating Atmospheric Transport and Dispersion of Gaseous Effluents in Routine Releases from Light-Water-Cooled Reactors*. Regulatory Guide 1.111, Revision 1, Office of Standards Development. (July).

U.S. Nuclear Regulatory Commission (NRC). 1977c. *Calculation of Annual Doses to Man from Routine Releases of Reactor Effluents for the Purpose of Evaluating Compliance with 10 CFR Part 50, Appendix I*. Regulatory Guide 1.109, Revision 1, Office of Standards Development. (October).

U.S. Nuclear Regulatory Commission (NRC). 1996. *Generic Environmental Impact Statement for License Renewal of Nuclear Plants*. NUREG-1437, Vols. 1 and 2, Washington, D.C.

U.S. Nuclear Regulatory Commission (NRC). 2002. *Final Generic Environmental Impact Statement on Decommissioning Nuclear Facilities, Supplement 1, Regarding the Decommissioning of Nuclear Power Reactors*. NUREG-0586, Vols. 1 and 2, Washington, D.C.

U.S. Nuclear Regulatory Commission (NRC). 2005. *Staff Review of the National Academies Study of the Health Risks from Exposure to Low Levels of Ionizing Radiation (BEIR VII).* Commission Paper SECY-05-0202, ADAMS Accession Number ML052640532 (October 29).

U.S. Nuclear Regulatory Commission (NRC). 2006. *Liquid Radioactive Release Lessons Learned Task Force Final Report*. Available URL: http://adamswebsearch2.nrc.gov/idmws/doccontent.dll?library=PU_ADAMS^PBNTAD01&ID=062770207 (Accessed October 17, 2007).

Appendix E

Environmental Impact of Postulated Accidents

Appendix E

Environmental Impact of Postulated Accidents

E.1 Introduction

Chapter 5 of the *Generic Environmental Impact Statement for License Renewal of Nuclear Plants (*GEIS), Volumes 1 and 2 (NRC 1996, 1999)[(a)] assessed the impacts of postulated accidents at nuclear power plants on the environment. The postulated accidents included design basis accidents and severe accidents (e.g., those with core melt). The impacts considered included:

- Dose and health effects of accidents (Sections 5.3.3.2 through 5.3.3.4);
- Economic impacts of accidents (Section 5.3.3.5); and
- Impact of uncertainties on results (Section 5.3.4).

The estimated impacts were based upon the analysis of severe accidents at 28 nuclear power plant sites,[(b)] as reported in the environmental impact statements (EISs) and/or final environmental statements (FESs) prepared for each of the 28 plants in support of their operating licenses. With few exceptions, the severe accident analyses were limited to consideration of reactor accidents caused by internal events. The 1996 GEIS addressed the impacts from external events qualitatively.[(c)] The severe accident analysis for the 28 sites was extended to the remainder of plants whose EISs did not consider severe accidents (since such analyses were not required at the time the other plants' EISs were prepared). The estimates of

(a) The GEIS was originally issued in 1996. Addendum 1 to the GEIS was issued in 1999. Hereafter, all references to the "GEIS" include the GEIS and Addendum 1.

(b) The 28 sites are listed in Table 5.1 of the 1996 GEIS. There are a total of 44 units included in this list (at the 28 sites), but 4 of these units never operated (Grand Gulf 2, Harris 2, Perry 2, and Seabrook 2). For the purpose of this appendix, this list will be referred to as containing 28 nuclear power plants, but when mean values are calculated for this subset of nuclear power plants, all 40 units that operated are considered.

(c) See Section 5.3.3.1 of the GEIS, including a brief discussion of the external event risk assessments conducted by the staff prior to 1996, which included assessments for Zion 1 & 2, Indian Point 2 & 3, Limerick 1 & 2, Surry 1, Peach Bottom 2, and Millstone 3.

environmental impact contained in the 1996 GEIS used 95th percentile upper confidence bound (UCB) estimates whenever available. This approach provides conservatism to cover uncertainties, as described in Section 5.3.3.2.2 of the 1996 GEIS. The 1996 GEIS concluded that the probabilistically weighted consequences and impacts were small compared to other risks to which the populations surrounding nuclear power plants are routinely exposed.

The focus of this revision is on severe accidents, since the impacts from design basis accidents are small and, as stated in Section E.3 of this revision, remain unchanged. Since the U.S. Nuclear Regulatory Commission's (NRC's) understanding of severe accident risk has naturally evolved following the issuance of the 1996 GEIS, this appendix assesses more recent information on severe accidents that might alter the conclusions in Chapter 5 of the 1996 GEIS. This revision considers how these developments would affect the conclusions in the original GEIS and provides comparative data where appropriate. This revision does not attempt to provide new quantitative estimates of severe accident impacts. In addition, the revision only covers one initial license renewal period for each plant (as did the 1996 GEIS). Thus, the population projections, meteorology and exposure indices used in the 1996 GEIS are assumed to remain unchanged for purposes of this analysis.

Finally, the format of this appendix follows the same format as used in Chapter 5 of the 1996 GEIS, including a discussion on uncertainties and severe accident mitigation alternatives (SAMAs).

In addition, comments received in response to a notice in the *Federal Register* (NRC 2005c) soliciting feedback on the proposed GEIS revision were also considered in preparing this appendix.

E.2 Plant Accidents

A general description of plant accidents is contained in Section 5.2 of the 1996 GEIS. This description covered:

- The general characteristics of accidents;
- Fission product characteristics;
- Meteorological considerations;
- Exposure pathways;

- Adverse health effects;
- Avoiding adverse health effects;
- Accident experience and observed impacts;
- Mitigation of accident consequences; and
- Emergency preparedness.

This description is still valid and thus remains unchanged. Section 5.2 of the 1996 GEIS also mentions that as of 1990, there have been approximately 1300 reactor-years of experience to support the safety of United States nuclear power plants. As with any technology, experience generally leads to improved plant performance and public safety. As of 2007, there has been approximately an additional 1700 reactor-years of experience in the United States. This additional experience has contributed to improved plant performance (e.g., as measured by trends in plant-specific performance indicators), a reduction in operating events, and lessons learned that improve the safety of all of the operating nuclear power plants. Other examples of items contributing to improved safety include:

- Implementation of plant improvements identified through the Individual Plant Examination and Individual Plant Examination: External Events (IPE/IPEEE) programs (e.g., strengthening of seismic supports; enhanced fire brigade training) (NRC 2003);
- Identification of specific aging mechanisms (e.g., cables; irradiation-assisted stress corrosion cracking) and development of programs to monitor and control these mechanisms (NRC 2001c);
- NRC staff actions on generic safety issues (e.g., Generic Safety Issue 191 on sump performance) (NRC 2008e); and
- Implementation of the NRC's Interim Compensatory Measures (ICMs) Order following the September 2001 terrorist attacks.[(a)]

Thus, the performance and safety record of nuclear power plants operating in the United States continues to improve. This is also confirmed by analysis which indicates that, in many cases,

(a) The safety evaluations (SEs) for the operating license amendments associated with implementation of Section B.5.b. of Commission Order EA-02-026 provide background related to the implementation of particular portions of the ICMs. As an example, the reader is referred to the SE associated with Brunswick Steam Electric Plant, Units 1 and 2 (NRC 2007b).

improved plant performance and design features have resulted in reductions in initiating event frequency, core damage frequency and containment failure frequency.[(a)]

E.3 Accident Risk and Impact Assessment

The environmental impacts from design basis accidents and severe accidents are assessed in Sections 5.3.2 and 5.3.3 of the 1996 GEIS, respectively. As stated in Section 5.3.2, the environmental impact from design basis accidents was assessed in the individual plant specific EISs at the time of the initial license application review. Since the licensee is required to maintain the plant within acceptable design and performance criteria, including during any extended life operation, these impacts are not expected to change. Therefore, additional assessment of the environmental impacts from design basis accidents is not necessary, and the bulk of the GEIS evaluation focused on the environmental impact of severe accidents.

To assess the impacts from the airborne pathway, the 1996 GEIS relied on severe accident analyses provided in the EISs for the more recent sites. Table 5-1 in the 1996 GEIS lists the 28 nuclear power plants that included severe accident analyses in their plant-specific EISs. These plant-specific EISs used site-specific meteorology, land topography, population distributions, and offsite emergency response parameters, along with generic or plant-specific source terms, to calculate offsite health and economic impacts. The offsite health effects included those from airborne releases of radioactive material and contamination of surface water and groundwater.

The 1996 GEIS used the environmental impact information from the 28 plant-specific EISs and a metric called the exposure index to (1) scale up the radiological impact of severe accidents on the population due to demographic changes from the time the original EIS was done until the year representing the mid-license renewal period and (2) estimate the severe accident environmental impacts for the earlier plants (whose EISs did not include a quantitative assessment of severe accidents). The exposure index method uses the projected population distribution around each nuclear power plant site at the middle of its license renewal period and meteorology data for each site to provide a measure of the degree to which the population would be exposed to the release of radioactive material resulting from a severe accident (i.e., the exposure index method weights the population in each of 16 sectors around a nuclear power plant by the fraction of time the wind blows in that direction on an annual basis). The exposure index metric was also used to project economic impacts at the mid-year of the license

(a) This statement is based on industry performance data provided in the NRC's *2007-2008 Information Digest* (NRC 2007c) and on the NRC's website (NRC 2008c), as well as information contained in Chapter 5 of the site-specific EISs (the NUREG-1437 series of supplements).

renewal period. A more detailed description of the exposure index method is contained in Appendix G of the 1996 GEIS. The use of the exposure index method remains valid.

Since 1996, developments in plant operation and accident analysis have taken place that could affect the assumptions made in the 1996 GEIS. These changes are grouped into the following areas, and are each covered in the indicated section of this revision:

- Internal event risk (Section E.3.1);
- External event risk (Section E.3.2);
- Updates in the quantification of accident source terms (Section E.3.3);
- Increases in licensed reactor power levels, i.e., power uprates (Section E.3.4);
- Increases in fuel burnup levels (Section E.3.5);
- Consideration of reactor accidents at low power and shutdown conditions (Section E.3.6);
- Consideration of accidents in spent fuel pools (Section E.3.7); and
- The BEIR VII report on the risk of fatal cancers posed by exposure to radiation (Section E.3.8).

Sections discussing uncertainties, SAMAs, and conclusions are also provided.

As discussed in the Section 5.3.3.1 of the 1996 GEIS, the environmental impacts from security-related events were not considered in that document. As stated, these types of events are addressed via deterministic criteria in Title 10, Part 73, of the *Code of Federal Regulations* (10 CFR Part 73), rather than by risk assessments. The regulatory requirements under 10 CFR Part 73 provide reasonable assurance that the risk from sabotage is small. This section goes on to state:

> Although the threat of sabotage events cannot be accurately quantified, the Commission believes that acts of sabotage are not reasonably expected. Nonetheless, if such events were to occur, the Commission would expect that resultant core damage and radiological releases would be no worse than those expected from internally initiated events.

The NRC continues to take this position. As a result of the terrorist attacks of September 11, 2001, the NRC conducted a comprehensive review of the agency's security program and made further enhancements to security at a wide range of NRC-regulated facilities. These enhancements included significant reinforcement of the defense capabilities for nuclear facilities, better control of sensitive information, enhancements in emergency preparedness to further strengthen NRC's nuclear facility security program, and implementation of mitigating strategies to deal with postulated events potentially causing loss of large areas of the plant due to explosions or fires, including those that an aircraft impact might create. These measures are outlined in greater detail in NUREG/BR-0314 (NRC 2004), NUREG-1850 (NRC 2006a), and Sandia National Laboratory's "Mitigation of Spent Fuel Loss-of-Coolant Inventory Accidents and Extension of Reference Plant Analyses to Other Spent Fuel Pools" (NRC 2006b).

The NRC routinely assesses threats and other information provided by a variety of Federal agencies and sources. The NRC also ensures that licensees meet appropriate security-level requirements. The NRC will continue to focus on prevention of terrorist acts for all nuclear facilities and will not focus on site-specific evaluations of speculative environmental impacts resulting from terrorist acts. While these are legitimate matters of concern, the NRC will continue to address them through the ongoing regulatory process as a current and generic regulatory issue that affects all nuclear facilities and many of the activities conducted at nuclear facilities. The issue of security and risk from malevolent acts at nuclear power facilities is not unique to facilities that have requested a renewal of their licenses (NRC 2006a).

As such, malevolent acts remain speculative and beyond the scope of a National Environmental Policy Act (NEPA) review. NEPA requires that there be a "reasonably close causal relationship" between the federal agency action and the environmental consequences. The environmental impact of a terrorist attack is too far removed from the natural, or expected, consequences of a license renewal action to warrant consideration under NEPA. However, as noted above, in the event of a terrorist attack, the consequences of such an attack would be no worse than a severe accident, which has already been analyzed.

In a decision dated June 2, 2006, *San Luis Obispo Mothers for Peace v. NRC*, 449 F.3d 1016, 1028 (9th Cir. 2006) the United States Court of Appeals for the Ninth Circuit held that NRC could not categorically refuse to consider the consequences of a terrorist attack under NEPA and remanded the case to NRC. On remand, the Commission adjudicated the intervenors' claim that the NRC Staff had not adequately assessed the environmental consequences of a terrorist attack on the Diablo Canyon Power Plant's proposed facility for storing spent nuclear fuel in dry casks. *See, Pacific Gas & Electric Co.,* (Diablo Canyon Power Plant Independent Spent Fuel Storage Installation), CLI-08-26, 68 NRC ___ (2009). The Commission ultimately determined that an EIS was not required in order to address land contamination and latent health effect issues (Diablo Canyon, CLI-08-26, slip op. at 8, 15-16). Further, the Commission concluded that the staff's final, supplemental environmental assessment and finding of no

significant impact, the adjudicatory record of the case, and its supervisory review of the non-public information underlying portions of the staff's analyses, satisfied the agency's NEPA obligations. *Id.* at 22-23. The staff had found that even the most severe, plausible terrorist attack of those examined would not cause immediate or latent health effects. The staff also found that such an attack was improbable, but if one occurred, the likelihood of significant radioactive release was very low because the nature of the Diablo Canyon casks and site. *Id.* at 22. That case has been challenged in the U.S. Court of Appeals for the Ninth Circuit. See No. 08-75058 (petition for review filed 12/15/08).

The Commission stated that it will adhere to the Ninth Circuit decision when considering licensing actions for facilities subject to the jurisdiction of that Circuit. *See Pacific Gas and Electric Co., (Diablo Canyon Power Plant Independent Spent Fuel Storage Installation*), CLI-07-11, 65 NRC 118 (2007). However, the Commission decided against applying that holding to all licensing proceedings nationwide. In one such proceeding, *Amergen Energy Co. LLC* (Oyster Creek Nuclear Generating Station), CLI-07-8, 65 NRC 124, 128-29 (2007), the New Jersey Department of Environmental Protection contended that NEPA requires an analysis of a terrorist attack. The NRC found that NEPA "'imposes no legal duty on the NRC to consider intentional malevolent acts'" because such acts are "'too far removed from the natural or expected consequences of agency action.'" *Id.* at 129 (quoting the Board decision). The NRC also found that a terrorism review would be redundant because (1) "the NRC has undertaken extensive efforts to enhance security at nuclear facilities," which it characterized as the best mechanism to protect the public; *id.* at 130; (2) the GEIS had addressed the issue and concluded that "the core damage and radiological release from [terrorist] acts would be no worse than the damage and release to be expected from internally initiated events." On appeal, the Third Circuit agreed with the NRC and denied the petition. *See NJDEP v. NRC and Amergen Energy Co, LLC,* (Case No. 07-2271), 561 F.3rd 132 (3rd Cir. 2009). The Court found that, "the NRC correctly concluded that the relicensing of Oyster Creek does not have a 'reasonably close causal relationship' with the environmental effects that would be caused in the event of a terrorist attack." 561 F.3d at 143.

The Third Circuit disagreed with the Ninth Circuit's application of the relevant Supreme Court decisions. Instead, as the Commission had originally held, the Third Circuit concluded that the issuance of a facility license – here, the issuance of the 20-year extension for the Oyster Creek license – would not be the "proximate cause" of a terrorist attack on the facility.

Moreover, the Third Circuit noted that the GEIS for License Renewal had reviewed the possible impacts of a sabotage event, which is a form of terrorism. The GEIS found that the consequences of a sabotage event would be no worse than those expected from [a sever accident]." The Third Circuit noted that the petitioner in the case before it (the State of New Jersey) had failed to demonstrate that the results of a terrorist attack would be any different than those of a severe accident, which had already been analyzed. The Third Circuit also noted

that the NRC had prepared a SEIS addressing the mitigation of severe accidents at Oyster Creek. As a result, the Third Circuit found that, even if the Commission were required to analyze the impacts of a terrorist attack, the NRC had prepared both a generic and site-specific analyses of the impacts of a terrorist attack at Oyster Creek and that the Petitioner had not shown that the NRC could evaluate the risks more meaningfully than it had already done.

In sum, the Commission has found that the issuance of a facility license is not the "proximate cause" of a terrorist attack at that facility. Thus, it is not required to prepare an EIS discussion on the potential impacts of a terrorist attack. However, in respect for the decision of the Ninth Circuit, the NRC will prepare an analysis of the environmental impacts of a terrorist attack for licensing actions of facilities within the geographical boundaries of the Ninth circuit. In addition, the Third Circuit has held that the GEIS for License Renewal constitutes such an analysis for license renewals.

E.3.1 Impact of New Information on Accidents Initiated by Internal Events

With few exceptions, the severe accident analyses formulating the basis for the 1996 GEIS were limited to consideration of reactor accidents caused by internal events. The GEIS addressed the impacts from external events qualitatively, and external events are covered in more detail in Section E.3.2 of this revision. The impacts from the 1996 GEIS were based on the original license EISs for the 28 nuclear power plant sites listed in Table 5.1 of the GEIS. The source terms and their likelihood used in the plant-specific original EISs to calculate the airborne pathway environmental impacts of accidents were, in turn, usually based upon information contained in NUREG-0773 (NRC 1982). NUREG-0773 is an update of the original Reactor Safety Study (NRC 1975). These source terms and frequencies were used along with site-specific meteorology, population distributions, and emergency planning characteristics to calculate the airborne pathway environmental impacts. These EISs were issued in the 1981 to 1986 time frame. Thus, while the GEIS was published in 1996, it was primarily based on information from the 1980s.

Since the publication of NUREG-0773, many additional studies have been completed on the likelihood and consequences of reactor accidents initiated by internal events at full power. These studies include NUREG-1150 (NRC 1990c), NUREG/CR-5305 (NRC 1992), and licensee responses to Generic Letter 88-20, Supplement 1 (i.e., the IPE program). Licensees have further developed their IPE-vintage Probabilistic Risk Assessment (PRA) models to support risk-informed licensing actions, including license renewal SAMA analysis. In addition, the NRC has developed standardized plant analysis risk (SPAR) models for all operating plants which can be used to calculate core damage frequencies (CDFs) for internal events.

The purpose of this section is to assess how results from more up-to-date internal event information compare to those on which the 1996 GEIS was based. The evaluation contained in

this section compares the CDFs that formed the basis for the 1996 GEIS, and offsite doses directly from the 1996 GEIS, to the newer information. The comparison is done for pressurized water reactors (PWRs) and boiling water reactors (BWRs) and covers each of the plants listed in Table 5.1 of the 1996 GEIS. Changes in source terms (i.e., the quantity, form, and timing of radioactive material released to the environment) are assessed in Section E.3.3.

E.3.1.1 Airborne Pathway Impacts

As a first step in the comparison, the CDFs from the original EISs are compared to the CDFs reported in the plant-specific IPEs for the PWRs and BWRs listed in Table 5.1 of the 1996 GEIS. Tables E-1 and E-2 show these comparisons. As can be seen in Tables E-1 and E-2, for many plants, the IPE CDFs are smaller than those from the original EISs, particularly for BWRs. The mean of the IPE CDFs listed in Tables E-1 and E-2 are lower than the corresponding mean EIS CDF by 30 percent for PWRs and by more than a factor of 3 for BWRs. Accordingly, the likelihood of an accident that leads to core damage would be comparable to or less for PWRs, and significantly less for BWRs, than that used as the basis for the 1996 GEIS.

Additional comparisons can be made using information from NUREG-0773 (NRC 1982), the original EISs, NUREG-1150 (NRC 1990c), the IPEs, NUREG/CR-5305 (NRC 1992), recent analysis using SPAR models, and license renewal applications received to date. These comparisons are shown in Table E-3. In general, the Level 1 (CDF) results are comparable to or less than the corresponding Level 1 information from the GEIS. Furthermore, the newer estimates (license renewal and SPAR) are up to a factor of 2.5 lower than the mean IPE CDFs from Tables E-1 and E-2.

The comparison of Level 3 information is made difficult due to differences in the values reported between older and newer assessments. Older assessments tended to provide mean and/or upper bound population doses for the entire region surrounding the nuclear power plant (as far as 1000 mi). Newer assessments tend to provide mean values within 50 mi. NUREG-1150 provided distributions for both 50 and 1000 mi, and is used as a bridge in this comparison.

The mean of population dose results from the original EISs of the 28 sites that considered severe accidents are a factor of 2 to 4 lower than the mean of the plant-specific upper bound estimates used in the 1996 GEIS for those same 28 sites. The mean population doses from NUREG-1150 (for 1000-mi results) are, in turn, a factor of 10 to 100 less than the original EIS mean value. In actuality, the difference is even larger, because the NUREG-1150 estimate covers a larger area (1000 mi for NUREG-1150 versus 150 mi for the EIS). The NUREG-1150 results for a 50-mi radius are a factor of 4 to 10 lower than the 1000-mi results. The mean of license renewal results (for a 50-mile region) are somewhat higher than the mean results

reported in NUREG-1150 for a 50 mile region, but are still well below the population dose values reported in the original environmental impact statements for the 28 sites and used in the 1996 GEIS.

To summarize, the general contribution to decreased estimated doses are a factor of 2 to 4 simply due to the conservatism built into the 1996 GEIS values. An additional decrease in estimated doses of 10 to 100 is seen when comparing the EIS results to the NUREG-1150 results and a factor of 5 to 33 when comparing the EIS results to license renewal SAMA results.

Table E-1. PWR Internal Event (Full Power) Comparison

Plant	Original EIS Estimated CDF [(a)]	IPE CDF [(b)]
Beaver Valley 2	1.0×10^{-4}/yr	1.9×10^{-4}/yr
Braidwood 1, 2	1.0×10^{-4}/yr	2.7×10^{-5}/yr
Byron 1, 2	4.8×10^{-5}/yr	3.1×10^{-5}/yr
Callaway 1	4.8×10^{-5}/yr	5.9×10^{-5}/yr
Catawba 1, 2	4.8×10^{-5}/yr	5.8×10^{-5}/yr
Comanche Peak 1, 2	4.8×10^{-5}/yr	5.7×10^{-5}/yr
Shearon Harris 1	4.8×10^{-5}/yr	7.0×10^{-5}/yr
Indian Point 2, 3	3.5×10^{-4}/yr, 3.4×10^{-4}/yr	3.1×10^{-5}/yr, 4.4×10^{-5}/yr
Millstone 3	2.0×10^{-4}/yr	5.6×10^{-5}/yr
Palo Verde 1, 2, 3	4.8×10^{-5}/yr	9.0×10^{-5}/yr
San Onofre 2, 3	4.8×10^{-5}/yr	3.0×10^{-5}/yr
Seabrook 1	4.8×10^{-5}/yr	6.1×10^{-5}/yr [(c)]
South Texas 1, 2	4.4×10^{-5}/yr	4.3×10^{-5}/yr
St. Lucie 2	4.8×10^{-5}/yr	2.6×10^{-5}/yr
Summer 1	4.9×10^{-5}/yr	2.0×10^{-4}/yr
Vogtle 1, 2	1.0×10^{-4}/yr	4.9×10^{-5}/yr
Waterford 3	4.8×10^{-5}/yr	1.8×10^{-5}/yr
Wolf Creek 1	4.8×10^{-5}/yr	4.2×10^{-5}/yr
Mean value	8.4×10^{-5}/yr	5.9×10^{-5}/yr
Median value	4.8×10^{-5}/yr	4.9×10^{-5}/yr

(a) Obtained by summing individual atmospheric release sequences, including intact containment sequences.
(b) Source: NRC 2003, unless otherwise noted.
(c) Obtained from the licensee's IPEEE submittal.

Table E-2. BWR Internal Event (Full Power) Comparison

Plant	Original EIS Estimated CDF [(a)]	IPE CDF [(b)]
Clinton 1	2.4×10^{-5}/yr	2.7×10^{-5}/yr
Fermi 2	2.4×10^{-5}/yr	5.7×10^{-6}/yr
Grand Gulf 1	2.4×10^{-5}/yr	1.7×10^{-5}/yr
Hope Creek	1.0×10^{-4}/yr	4.6×10^{-5}/yr
Limerick 1 ,2	8.9×10^{-5}/yr	4.3×10^{-6}/yr
Nine Mile Point 2	1.1×10^{-4}/yr	3.1×10^{-5}/yr
Perry 1	2.4×10^{-5}/yr	1.3×10^{-5}/yr
River Bend	9.5×10^{-5}/yr	1.6×10^{-5}/yr
Susquehanna 1, 2	2.4×10^{-5}/yr	5.6×10^{-7}/yr [(c)]
WNP-2 [(d)]	2.4×10^{-5}/yr	1.8×10^{-5}/yr
Mean value	5.4×10^{-5}/yr	1.5×10^{-5}/yr
Median value	2.4×10^{-5}/yr	1.45×10^{-5}/yr

(a) Obtained by summing individual atmospheric release sequences, including intact containment sequences.
(b) Source: NRC 2003, unless otherwise noted.
(c) Revised 1998 IPE; obtained from NUREG-1437, Supp. 35, Appendix G.
(d) WNP-2 = Washington Nuclear Project 2 (i.e., Columbia).

E.3.1.2 Other Pathway Impacts

Any change in the likelihood of accidents that release substantial amounts of radioactive material to the environment not only affects the airborne pathway, but also the surface water and groundwater pathways and the economic impacts. The information in Tables E-1, E-2, and E-3 indicate that the likelihood and impacts of airborne pathway releases is smaller than that used in the 1996 GEIS. Since this pathway directly affects the surface water pathway and the economic impacts, it is reasonable to conclude that the likelihood of these pathway impacts would also be smaller and would continue to be bounded by the airborne pathway. This assumption is consistent with the results of the 1996 GEIS.

Table E-3. Comparisons with Other Risk Information (Full Power Internal Events)

			CDF (mean/point estimate)	Person-Rem per Year (Mean, except as noted)	
				Region [a]	50-mi
PWR	GEIS Basis	• NUREG-0773 [b]	6×10^{-5}/yr		
		• Original EIS [c]	8.4×10^{-5}/yr	932	
		• 1996 GEIS [c]		2200 [d]	
	Update	• NUREG-1150 Plants			
		- Surry	4×10^{-5}/yr	~30	~6
		- Sequoyah	5.6×10^{-5}/yr	~80	~10
		• IPE			
		- Catawba	5.8×10^{-5}/yr		15.66
		- McGuire	4×10^{-5}/yr		4.6
		- Surry	1.25×10^{-4}/yr		
		- Sequoyah	1.7×10^{-4}/yr		
		• License Renewal [e]	3.9×10^{-5}/yr		18.1
		• SPAR (v3.45) [c]	2.3×10^{-5}/yr		
BWR	GEIS Basis	• NUREG-0773 [b]	2×10^{-5}/yr		
		• Original EIS [c]	5.4×10^{-5}/yr	577	
		• 1996 GEIS [c]		2720[d]	
	Update	• NUREG-1150 Plants			
		- Grand Gulf	4×10^{-6}/yr	~5	~0.5
		- Peach Bottom	4.4×10^{-6}/yr	~30	~7
		• NUREG/CR-5305			
		- LaSalle	4×10^{-5}/yr	1500 [f]	66 [e]
		• IPE			
		- Peach Bottom	5.5×10^{-6}/yr		
		- LaSalle	4.7×10^{-5}/yr		
		- Grand Gulf	1.7×10^{-5}/yr		
		• License Renewal [e]	1.4×10^{-5}/yr		14.5
		• SPAR (v3.45) [b]	8×10^{-6}/yr		

(a) For the EISs and GEIS, the employed distance is 150 mi; for NUREG-1150 and NUREG/CR-5305, the employed distance is 1000 mi.
(b) Based on Table 22 (CDF) of that document; PWR CDF cited is for Surry and BWR corresponds to Peach Bottom.
(c) Values are for those plants listed in Tables E-1 and E-2.
(d) Note that this is the mean of the distribution of 95th percent UCB values.
(e) Mean values for all plants that have applied for license renewal as of August 2008; in a few cases (Beaver Valley, Calvert Cliffs, Ginna, and Nine Mile Point), the site-specific population dose values used included both internal and external events.
(f) Includes both internal and external events.

Furthermore, some information is available regarding basemat melt-through sequences:

- WASH-1400 (NRC 1975) used a frequency of 4×10^{-5}/yr for basemat melt-through sequences;
- NUREG-0773 (NRC 1982) used a generic frequency of 3×10^{-5}/yr and a site-specific frequency of 1.1×10^{-5}/yr for Indian Point Units 2 and 3;
- NUREG-1150 (NRC 1990c) calculated the basemat melt-through frequencies for Surry and Sequoyah to be 2.4×10^{-6}/yr and 1×10^{-5}/yr, respectively;
- A sample of IPE results showed basemat melt-through frequencies ranging from 1×10^{-6}/yr to 4×10^{-6}/yr; and
- A sample of license renewal application results showed basemat melt-through frequencies ranging from 2×10^{-7}/yr to 6×10^{-6}/yr.

For the 1996 GEIS, a conservative value of 1×10^{-4}/yr was used (see Section 5.3.3.4 of the 1996 GEIS), which is higher than any of the values cited above. As such, it is concluded that the basemat melt-through frequencies used in the 1996 GEIS to assess the groundwater pathway are bounding.

For BWRs, no quantitative basemat melt-through information was available. It is expected that for BWRs, containment failure by overpressure would occur before basemat melt-though. In addition, if basemat melt-through sequences do occur, their frequency would be less than that for PWRs due to the lower CDFs for BWRs.

E.3.1.3 Conclusion

The PWR and BWR accident frequencies that form the basis for the environmental impacts shown in the 1996 GEIS are, in most cases, comparable to or higher than the updated accident frequencies shown in Tables E-1, E-2, and E-3. In addition, the population dose estimates presented in Table E-3 demonstrate the conservatism in the 1996 GEIS values, both from the standpoint of reduced risk from more recent estimates and the conservatism built into the GEIS methodology.

E.3.2 Impact of Accidents Initiated by External Events

The 1996 GEIS included a qualitative assessment of the environmental impacts of accidents initiated by external events (see Section 5.3.3.1 of that document). The purpose of this section is to consider updated information regarding potential external event impacts. The sources of

information used in this assessment are (1) NUREG-1150 (NRC 1990c) (and the supporting documentation in NUREG/CR-4551 [NRC 1990a]), which assessed seismic and fire events for two plants (Surry and Peach Bottom); (2) NUREG/CR-5305 (NRC 1992), which analyzed the risk from seismic and fire events for one plant (LaSalle); and (3) the results from the IPEEE program, as documented in NUREG-1742 (NRC 2003). The IPEEE program was initiated in the early 1990s and required all operating plants in the United States to do an assessment to identify vulnerabilities to severe accidents initiated by external events and report the results to the NRC, along with any identified improvements and/or corrective actions. NUREG-1742 documents the perspectives derived from the technical reviews of the IPEEE results.

Typically, the external events that contribute the most to plant risk are seismic and fires. In some cases, high winds, floods, and tornados may contribute to plant risk; however, these contributions are generally much lower than those from seismic and fire events. Therefore, the assessment of the environmental impact from external events provided here focuses on seismic and fire events. This is consistent with the results obtained from the IPEEEs and the perspectives articulated in NUREG-1742.

E.3.2.1 Airborne Pathway Impacts

The assessment in this section is based upon a comparison of the risks and environmental impacts from severe accidents initiated by external events to those initiated by internal events, based on the aforementioned information sources.

<u>LEVEL 1 COMPARISON (CDF)</u>

From the IPEEE the following insights can be drawn:

(1) For a majority of plants, fire and/or seismic events are important contributors to risk.

(2) The contributions to CDFs from fire events are comparable to the contribution to CDFs from internal events. The IPEEE CDF values for fire-initiated events are shown in Tables E-4 and E-5 along with the IPE internal event CDFs. For the plants listed in Tables E-4, the PWR fire CDF is about half the internal event CDF. For the BWR plants in Table E-5, the fire CDF is roughly 50 percent higher than the internal events CDF. Section 3.3.1.1 of NUREG-1742 (NRC 2003) provides a comparison of fire and internal events for the entire fleet of plants, and similarly concludes that BWR results are comparable, while PWR results are slightly lower for fire CDF.

However, the IPEEE fire event CDFs are much lower than the internal event CDFs from the original EISs (basis for the 1996 GEIS). The mean value of the PWR fire event CDFs in Table E-4 is one-third the PWR internal event CDF from the EISs

(see Table E-1), and the mean value of the BWR fire event CDFs in Table E-5 is less than half the BWR internal event CDF from the original EISs (see Table E-2). It is also worth noting that Table 3.9 in Volume 1 of NUREG-1742 presents some additional information showing that conditional bypass and containment failure probabilities resulting in large early releases is generally small.

(3) The contributions to CDF from seismic events are comparable to the contribution from internal events. For plants listed in Tables E-1 and E-2 that reported seismic CDFs as part of their IPEEE submittals, these CDFs are contained in Tables E-4 and E-5. Although sparse, these values suggest seismic CDFs are lower than or comparable to internal event CDFs. Section 2.6.1 of NUREG-1742 considers all reporting plants, and states that the largest group of reported seismic CDFs were in the range of 1×10^{-5} to 1×10^{-4} (same order of magnitude as the basis for the 1996 GEIS), with the next largest group being 1×10^{-6} to 1×10^{-5} (one order of magnitude lower than the basis for the 1996 GEIS).

(4) As a result of the IPEEE program, most licensees have made improvements to plant hardware, procedures, or training programs. Although not generally quantified as part of the IPEEE, those improvements are, in many cases, considered to have lowered the reported risk estimates.

Table E-6 compares CDFs from NUREG-1150 (NRC 1990c) and NUREG/CR-5305 (NRC 1992) for internal, fire, and seismic events with the internal events from the original EISs (which formed the basis for the 1996 GEIS). As can be seen in this table, the NUREG-1150 and NUREG/CR-5305 fire and seismic CDFs are comparable to those supporting the 1996 GEIS, with a number of both relatively lower and higher comparisons.[(a)]

In support of early site permits for new reactors, the NRC staff reviewed updates to seismic source and ground motion models provided by applicants. The updates to seismic data and models could result in estimated seismic hazard levels at some current central and eastern United States operating sites that would be higher than seismic hazard values used in design and previous evaluations (such as the IPEEEs). Due to its relevance for other licensing actions, the issue is being pursued as part of the Generic Issues Program, as Generic Issue 199 (GI-199). A preliminary assessment performed for the affected plants as part of GI-199 indicates that the average increase in seismic CDF relative to the IPEEE-era estimates would

(a) The NUREG-1150 values represented best-estimate values at the time they were completed. For Surry, the Lawrence Livermore National Laboratory (LLNL) NUREG-1150 curve is uniformly higher than other seismic hazard estimates (e.g., the Electric Power Research Insitute [EPRI] and LLNL curves used for the IPEEEs, recent United States Geological Survey curves). For Peach Bottom, the EPRI NUREG-1150 curve is uniformly lower.

be about 1E-5 per year. However, this assessment also indicates that on average, the updated seismic CDF remains slightly (approximately 30 percent) less than the internal events CDF. Thus, seismic hazard estimates remain small in an absolute sense, and the new risk estimates are not expected to change the conclusion that the impacts utilized in the 1996 GEIS are bounding.

Table E-4. PWR Internal, Fire, and Seismic Event CDF Comparison (Full Power) [(a)]

Plant	IPE Internal Events CDF	IPEEE Fire CDF	IPEEE Seismic CDF (EPRI/Other/Update)	IPEEE Seismic CDF (LLNL)
Beaver Valley 2	1.9×10^{-4}/yr	1.1×10^{-5}/yr	1×10^{-5}/yr	2.3×10^{-5}/yr
Braidwood 1, 2	2.7×10^{-5}/yr	3.9×10^{-6}/yr		
		3.8×10^{-6}/yr		
Byron 1, 2	3.1×10^{-5}/yr	4.2×10^{-6}/yr		
		5.3×10^{-6}/yr		
Callaway 1	5.9×10^{-5}/yr	8.9×10^{-6}/yr		
Catawba 1, 2	5.8×10^{-5}/yr	4.6×10^{-6}/yr	1.6×10^{-5}/yr	
Comanche Peak 1, 2	5.7×10^{-5}/yr	2.1×10^{-5}/yr		
Shearon Harris 1	7.0×10^{-5}/yr	1.3×10^{-5}/yr		
Indian Point 2, 3	3.1×10^{-5}/yr	1.8×10^{-5}/yr	1.3×10^{-5}/yr	1.5×10^{-5}/yr
	4.4×10^{-5}/yr	5.6×10^{-5}/yr	5.9×10^{-5}/yr	4.4×10^{-5}/yr
Millstone 3	5.6×10^{-5}/yr	4.8×10^{-6}/yr	9.1×10^{-6}/yr	
Palo Verde 1, 2, 3	9.0×10^{-5}/yr	8.7×10^{-5}/yr		
San Onofre 2, 3	3.0×10^{-5}/yr	1.6×10^{-5}/yr	1.7×10^{-5}/yr	
Seabrook 1	6.1×10^{-5}/yr [(b)]	1.2×10^{-5}/yr	1.2×10^{-5}/yr	1.3×10^{-4}/yr
South Texas 1, 2	4.3×10^{-5}/yr	5.1×10^{-7}/yr	1.9×10^{-7}/yr	2.2×10^{-5}/yr
St. Lucie 2	2.6×10^{-5}/yr	1.9×10^{-4}/yr		
Summer 1	2.0×10^{-4}/yr	8.5×10^{-5}/yr		
Vogtle 1, 2	4.9×10^{-5}/yr	1.0×10^{-5}/yr		
Waterford 3	1.8×10^{-5}/yr	7.0×10^{-6}/yr		
Wolf Creek 1	4.2×10^{-5}/yr	7.6×10^{-6}/yr		
Mean Value	5.9×10^{-5}/yr	2.8×10^{-5}/yr	1.5×10^{-5}/yr	4.3×10^{-5}/yr

(a) Source: NRC 2003, unless otherwise stated.
(b) Obtained from the licensee's IPEEE submittal.

Table E-5. BWR Internal, Fire, and Seismic Event CDF Comparison (Full Power) [(a)]

Plant	IPE Internal Events CDF	IPEEE Fire CDF	IPEEE Seismic CDF (EPRI/Other/Update)	IPEEE Seismic CDF (LLNL)
Clinton 1	2.7×10^{-5}/yr	3.6×10^{-6}/yr		
Fermi 2	5.7×10^{-6}/yr	2.2×10^{-5}/yr		
Grand Gulf 1	1.7×10^{-5}/yr	8.9×10^{-6}/yr		
Hope Creek	4.6×10^{-5}/yr	8.1×10^{-5}/yr	1.1×10^{-6}/yr	3.6×10^{-6}/yr
Limerick 1, 2	4.3×10^{-6}/yr	N/A [(b)]		
Nine Mile Point 2	3.1×10^{-5}/yr	1.4×10^{-6}/yr	2.5×10^{-7}/yr	1.2×10^{-6}/yr
Perry 1	1.3×10^{-5}/yr	3.3×10^{-5}/yr		
River Bend	1.6×10^{-5}/yr	2.3×10^{-5}/yr		
Susquehanna 1, 2	5.6×10^{-7}/yr [(c)]	3.6×10^{-8}/yr		
WNP-2 [(d)]	1.8×10^{-5}/yr	5.5×10^{-5}/yr	2.1×10^{-5}/yr	
Mean Value	1.5×10^{-5}/yr	2.3×10^{-5}/yr	7.5×10^{-6}/yr	2.4×10^{-6}/yr

(a) Source: NRC 2003, unless otherwise stated.
(b) N/A = not available.
(c) Revised 1998 IPE; obtained from NUREG-1437, Supp. 35, Appendix G.
(d) WNP-2 = Washington Nuclear Project 2 (i.e., Columbia).

Table E-6. NUREG-1150 and NUREG/CR-5305 Fire and Seismic CDFs

Plant	Internal Events (mean value)	Fire Events (mean value)	Seismic Events (mean value) [(a)]	1996 GEIS Basis Internal Events (mean value)
Surry (NUREG-1150)	4×10^{-5}/yr	1.1×10^{-5}/yr	1.9×10^{-4}/yr	8.4×10^{-5}/yr [(b)]
Peach Bottom (NUREG-1150)	4.4×10^{-6}/yr	2×10^{-5}/yr	7.5×10^{-5}/yr	5.4×10^{-5}/yr [(c)]
LaSalle (NUREG/CR-5305)	4×10^{-5}/yr	5.5×10^{-5}/yr	8×10^{-7}/yr	5.4×10^{-5}/yr [(c)]

(a) Based on the LLNL seismic hazard distribution results.
(b) This value is the mean of the CDFs of all PWRs listed in Table 5.1 of the 1996 GEIS.
(c) This value is the mean of the CDFs of all BWRs listed in Table 5.1 of the 1996 GEIS.

LEVEL 3 COMPARISON

To obtain quantitative information on the airborne pathway environmental impacts of severe accidents caused by external events, IPEEE, NUREG-1150, and NUREG/CR-5305 results can be used to compare against the internal event airborne pathway impacts contained in the 1996 GEIS. The following discussion summarizes the airborne pathway environmental impact information available.

The IPEEE provided external event environmental impact information (i.e., early fatalities, latent fatalities, and population dose) for Catawba and McGuire. This information showed the impacts of external events to be much less (i.e., one to two orders of magnitude) than those estimated for internally initiated events at full power in the 1996 GEIS for Catawba and McGuire (See Table E-7). Recall that while this is a comparison of mean values versus 95 percent upper confidence bound (UCB) values, the 95 percent UCB values are the ones used for the basis of the 1996 GEIS. Thus, this comparison shows that more realistic estimates are significantly lower than the conservative estimates used in the GEIS.

Fire Events

NUREG-1150 provides quantitative information on the airborne pathway environmental impact from fires for Surry and Peach Bottom. This information is shown in Tables E-8 and E-9 along with the full power, internal event environmental impact information from NUREG-1150 and the 1996 GEIS. NUREG/CR-5305 provides similar information for LaSalle, as presented in Table E-10. Tables E-8 through E-10 present 95th percentile results for all values. As can be seen from these tables, even 95th percentile values from NUREG-1150 and NUREG/CR-5305 are significantly lower (at least by 1 order of magnitude) than the conservative values used in the 1996 GEIS.

Seismic Events

Table E-11 presents mean results from the second-tier NUREG-1150 study documentation (NUREG/CR-4551 [NRC 1990a]) for impacts due to seismic initiators at Surry and Peach Bottom. As can be seen from this table, the mean results from the NUREG-1150 study are, in most cases, significantly smaller than the 95th percentile estimates used in the 1996 GEIS.

E.3.2.2 Other Pathway Impacts

With respect to the other pathways (open bodies of water and groundwater), the IPEEE, NUREG-1150, and NUREG/CR-5305 analysis did not address their impacts on human health. The 1996 GEIS estimated these impacts for reactor accidents from full power (internal events only) using the results from site-specific information on surface water and groundwater areas,

Table E-7. Catawba and McGuire Results for Internal and External Events

Impact	Catawba External Events	Catawba Internal Events	Catawba 1996 GEIS Internal Events - 95 percent UCB	McGuire External Events	McGuire Internal Events	McGuire 1996 GEIS Internal Events - 95 percent UCB
Total person-rem per year	43.6	15.6	1880	10.7	4.6	1806
Total early fatality risk	7.8×10^{-6}/yr	5.9×10^{-6}/yr	1.7×10^{-2}/yr	2.2×10^{-6}/yr	8.2×10^{-7}/yr	1.0×10^{-2}/yr
Total latent fatality risk	2.7×10^{-3}/yr	9.4×10^{-4}/yr	1.4/yr [(a)]	7.4×10^{-4}/yr	3.2×10^{-4}/yr	1.4/yr[(a)]

(a) These values include the factor of 10 adjustment made in the 1996 GEIS (see Section 5.3.3.2.3 of the 1996 GEIS).

Table E-8. Impacts of Accidents Caused by Fire Events (Surry)

Impact	NUREG-1150 Fire Events (95th percentile)	NUREG-1150 Internal Events (95th percentile)	1996 GEIS Internal Events (95th percentile)
Individual risk			
- EF [(a)] (1 mi)	~1.5×10^{-10}/yr	~5×10^{-8}/yr	Not available
- LF [(b)] (10 mi)	~1.5×10^{-10}/yr	~1×10^{-8}/yr	Not available
Total person-rem per year (entire region)	~2	~150	1200
Total early fatality risk	~1×10^{-8}/yr	~4×10^{-6}/yr	1.6×10^{-2}/yr
Total latent fatality risk	~6×10^{-4}/yr	~3×10^{-2}/yr	0.9/yr

(a) EF = early fatality risk. The individual early fatality risk within one mile is the frequency (per year) that a person living within one mile of the site boundary will die within a year due to the accident. The entire population within one mile is considered to obtain an average value.

(b) LF = latent fatality risk. The individual latent cancer fatality risk within 10 miles is the frequency (per year) that a person living within 10 miles of the plant will die many years later from cancer due to radiation exposure received from the accident. The entire population within 10 miles is considered to obtain an average value.

Table E-9. Impacts of Accidents Caused by Fire Events (Peach Bottom)

Impact	NUREG-1150 Fire Events (95th percentile)	NUREG-1150 Internal Events (95th percentile)	1996 GEIS Internal Events (95th percentile)
Individual risk			
- EF [(a)] (1 mi)	~1.5×10^{-9}/yr	~2.5×10^{-10}/yr	Not available
- LF [(b)] (10 mi)	~1×10^{-8}/yr	~1.5×10^{-9}/yr	Not available
Total person-rem per year (entire region)	~700	~100	2950
Total early fatality risk	~1.5×10^{-6}/yr	~1×10^{-7}/yr	4.2×10^{-3}/yr
Total latent fatality risk	~0.15/yr	~2×10^{-2}/yr	2.0/yr

(a) EF = early fatality risk. The individual early fatality risk within one mile is the frequency (per year) that a person living within one mile of the site boundary will die within a year due to the accident. The entire population within one mile is considered to obtain an average value.

(b) LF = latent fatality risk. The individual latent cancer fatality risk within 10 miles is the frequency (per year) that a person living within 10 miles of the plant will die many years later from cancer due to radiation exposure received from the accident. The entire population within 10 miles is considered to obtain an average value.

volumes, flow-rates, and geology to assess contamination of water by comparing the site-specific information to that used in NUREG-0440 (NRC 1978), which assessed the contamination of surface water and groundwater from reactor accidents.

With the airborne pathway impacts from external events much less than the internal event airborne pathway impacts in the 1996 GEIS, it is reasonable to conclude that the impact of accidents caused by external events on surface water and groundwater contamination will also be much less than the impacts contained in the 1996 GEIS. Due to the longer time before the population is exposed and the effects of interdiction of contaminated food, only latent fatalities are expected to result from these pathways. Therefore, the environmental impacts of surface and groundwater contamination caused by accidents initiated by external events are bounded by the impacts stated in the 1996 GEIS. This same conclusion can also be drawn with respect to the economic impacts.

E.3.2.3 Conclusion

In summary, it is concluded that the CDFs from severe accidents initiated by external events, as quantified in NUREG-1150 (NRC 1990c) and the other sources cited above, can be comparable to those from accidents initiated by internal events, but lower than the CDFs that formed the basis for the 1996 GEIS. The environmental impacts from externally initiated events are generally significantly lower (one or more orders of magnitude) than those used in the 1996 GEIS.

Table E-10. Impacts of Accidents Caused by Fire Events (LaSalle)

Impact	NUREG/CR-5305 Fire Events (95th percentile)	NUREG/CR-5305 Internal Events (95th percentile)	1996 GEIS Internal Events (95th percentile)
Individual risk			
- EF [(a)] (1 mi)	~1.1×10^{-10}/yr	~1.5×10^{-10}/yr	Not available
- LF [(b)] (10 mi)	~1.0×10^{-8}/yr	~1.3×10^{-8}/yr	Not available
Total person-rem per year	~1920	~2600	2898
Total early fatality risk	~9×10^{-9}/yr	~1.2×10^{-8}/yr	3.6×10^{-3}/yr
Total latent fatality risk	~0.3/yr	~0.4/yr	2.0/yr

(a) EF = early fatality risk. The individual early fatality risk within one mile is the frequency (per year) that a person living within one mile of the site boundary will die within a year due to the accident. The entire population within one mile is considered to obtain an average value.
(b) LF = latent fatality risk. The individual latent cancer fatality risk within 10 miles is the frequency (per year) that a person living within 10 miles of the plant will die many years later from cancer due to radiation exposure received from the accident. The entire population within 10 miles is considered to obtain an average value.

Table E-11. Impacts of Accidents Caused by Seismic Events

Impact	Surry		Peach Bottom	
	NUREG/CR-4551 Surry [(a)] LLNL (*EPRI*) Hazard Curve	1996 GEIS (95th percentile)	NUREG/CR-4551 Peach Bottom [(a)] LLNL (*EPRI*) Hazard Curve	1996 GEIS (95th percentile)
Individual risk				
- EF [(b)] (1 mi)	1.8×10^{-7}/yr (1.8×10^{-8}/yr)		1.6×10^{-6}/yr (5.3×10^{-8}/yr)	
- LF [(c)] (10 mi)	3.1×10^{-8}/yr (3.8×10^{-9}/yr)		3.4×10^{-7}/yr (1.1×10^{-8}/yr)	
Total person-rem per year	45 (*6.7*)	1200	460 (*17*)	2950
Total early fatality risk	9.3×10^{-5}/yr (1.4×10^{-5}/yr)	1.6×10^{-2}/yr	3.0×10^{-3}/yr (8.8×10^{-5}/yr)	4.2×10^{-3}/yr
Total latent fatality risk	3.9×10^{-2}/yr (5.6×10^{-3}/yr)	0.9/yr	2.5×10^{-1}/yr (9.9×10^{-3}/yr)	2.0/yr

(a) Mean values.
(b) EF = early fatality risk. The individual early fatality risk within one mile is the frequency (per year) that a person living within one mile of the site boundary will die within a year due to the accident. The entire population within one mile is considered to obtain an average value.
(c) LF = latent fatality risk. The individual latent cancer fatality risk within 10 miles is the frequency (per year) that a person living within 10 miles of the plant will die many years later from cancer due to radiation exposure received from the accident. The entire population within 10 miles is considered to obtain an average value.

E.3.3 Impact of New Source Term Information

The 1996 GEIS used information from 28 plant-specific EISs to project the environmental impact from all 118 plants analyzed (see Table 5.5 in the 1996 GEIS). The 28 sites chosen were those for which the impacts from severe accidents were analyzed in their plant-specific EISs. As stated in Section 5.3.3.1 of the 1996 GEIS, the source terms (i.e., the magnitude, timing, and characteristics of the radioactive material released to the environment) used in the EIS analyses for the 28 sites (and subsequently used to estimate the environmental impacts from all plants) were generally based on those documented in NUREG-0773 (NRC 1982). The NUREG-0773 source terms represented an update (rebaseline) of the source terms used in WASH-1400 (NRC 1975). The source terms in NUREG-0773 were developed for PWRs and BWRs and are shown in Tables 13 and 14A of that document. NUREG-0773 states that the provided source terms are based on models that have "known deficiencies which would tend to give overestimates of the magnitude of the releases."

Since completion of NUREG-0773, additional information on source terms has been developed through experimental and analytical programs. The purpose of this section is to assess the impact of new source term information on the environmental impacts described in the 1996 GEIS. The new source term information assessed is that used in NUREG-1150 (NRC 1990c) as updated and simplified in NUREG/CR-6295 (NRC 1997b).

E.3.3.1 Airborne Pathway Impact

Tables E-12 and E-13 present a comparison of the results for large release sequences from NUREG-0773 (NRC 1982) and NUREG/CR-6295 (NRC 1997b). These sequences typically dominate the total risk from all severe accidents. In this case, large release sequences have been culled from the full set of sequences in each study based on a total Iodine release fraction of 10% or higher. These tables present release frequencies, timings, and release fractions for iodine and cesium, which are the elements that contribute the most to early (iodine) and latent (cesium) fatalities. Only limited comparisons between the studies are possible due to differences in the sequences analyzed in each study and their associated release modes. Nevertheless the following observations can be made:

- The sum of the release frequencies from NUREG/CR-6295 are lower than those from NUREG-0773 for all containment types, with the exception of the NUREG/CR-6295 LaSalle sequences. However, the higher release frequency for LaSalle is offset by lower release fractions at LaSalle.

- Where direct comparisons can be made (i.e., for bypass sequences in PWRs and containment failures before vessel breach in BWRs) the release fractions from NUREG/CR-6295 are significantly lower than those from NUREG-0773.

- For several sequences in NUREG/CR-6295, the release fractions appear to be comparable to or slightly greater than those from NUREG-0773 (e.g., PWR sequence RSEQ1 and BWR sequence RPB6 which have a release magnitude comparable to the largest PWR release and BWR release from NUREG-0773, respectively. However, the release frequencies reported in NUREG/CR-6295 for these sequences are one to two orders of magnitude lower than those from NUREG-0773, resulting in a lower risk impact.

- The release times and the difference in time between core uncovery and release to the atmosphere are generally comparable between the two studies.

Based on the comparisons provided above, the expected impacts, i.e., the frequency-weighted consequences, from the airborne pathway using the updated source term information would be much lower than previously predicted.

Table E-12. NUREG-0773 and NUREG/CR-6295 Large Source Terms (PWRs)

Source		Sequence	Frequency	Release Time (hr)	Release Duration (hr)	Post Core Uncovery Delta (hr) [a]	Iodine Release Fraction	Cesium Release Fraction
NUREG-0773	Surry	Event V (Bypass)	4×10^{-6}/yr	1	1	0.5	0.64	0.82
		TMLB'-δ (CF during CD)	3×10^{-6}/yr	2.5	0.5	1	0.31	0.39
		PWR-3 (CR during CD)	3×10^{-6}/yr	5	1.5	2	0.2	0.2
		Sum	1×10^{-5}/yr					
NUREG/CR-6295	Surry	RSUR1 [b] (CF at VB)	2.9×10^{-7}/yr	6	2	1	0.35	0.31
		RSUR4 [b] (Bypass)	1.6×10^{-6}/yr	1	2.5	0.7	0.12	0.12
		Sum	1.9×10^{-6}/yr					
	Sequoyah	RSEQ1 [b] (CF during CD)	2.8×10^{-7}/yr	5.5	2	0.5	0.59	0.62
		RSEQ2 [b] (CF at VB)	3.6×10^{-6}/yr	6	2	1	0.18	0.19
		RSEQ5 [b] (Bypass)	3.1×10^{-6}/yr	1	2.5	0.7	0.12	0.12
		Sum	7×10^{-6}/yr					

(a) For NUREG-0773, this represents the interval of time between the decision to take protective measures and the start of the release; for NUREG/CR-6295, this represents the time between core uncovery and the start of the release.
(b) These source terms have multiple plumes, which have been summed here for ease of comparison.
Bypass = fission product released from the reactor bypass the containment.
CF = containment failure.
CD = core damage.
VB = reactor vessel branch.

Table E-13. NUREG-0773 and NUREG/CR-6295 Large Source Terms (BWRs)

Source		Sequence	Frequency	Release Time (hr)	Release Duration (hr) [a]	Post Core Uncovery Delta (hr) [a]	Iodine Release Fraction	Cesium Release Fraction
NUREG-0773	Peach Bottom	AEα' (CF before VB)	2×10^{-9}/yr	0.8	0.5	0.5	0.3	0.6
		AEα (CF before VB, scrub)	1×10^{-9}/yr	0.8	0.5	0.5	0.2	0.4
		TCγ' (CF before CD)	2×10^{-6}/yr	1.5	2.0	1.0	0.5	0.6
		TW γ' (CF before CD)	3×10^{-6}/yr	50	2.0	40	0.1	0.3
		Sum	5×10^{-6}/yr					
NUREG/CR-6295	Peach Bottom	RPB1 [b] (CF at VB)	1.2×10^{-6}/yr	11.5	4.3	3.5	0.11	0.1
		RPB2 [b] (CF at VB)	1.0×10^{-6}/yr	7.3	4.3	2.5	0.11	0.1
		RPB6 [b] (CF at VB)	3×10^{-8}/yr	11.5	4.3	3.5	0.44	0.4
		Sum	2.2×10^{-6}/yr					
	LaSalle	RLAS1 [b] (CF before VB)	6.3×10^{-6}/yr	58	13.5	4.8	0.16	0.17
		RLAS2 [b] (CF at VB)	6.2×10^{-6}/yr	3.8	7.3	2.5	0.15	0.03
		RLAS3 [b] (CF at VB)	1.2×10^{-6}/yr	16.9	6.3	5.8	0.11	0.07
		RLAS4 [b] (CF before VB)	2.4×10^{-6}/yr	23.7	1.8	0.5	0.18	0.12
		Sum	1.6×10^{-5}/yr					
	Grand Gulf	RGG1 [b] (CF at VB)	8.4×10^{-7}/yr	3.6	4	2.6	0.23	0.11
		RGG3 [b] (Late CF)	1.2×10^{-6}/yr	14	4	13	0.15	0.01
		Sum	2×10^{-6}/yr					

(a) For NUREG-0773, this represents the interval of time between the decision to take protective measures and the start of the release; for NUREG/CR-6295, this represents the time between when the water level reaches 2 feet above the bottom of the active fuel and the start of the release.
(b) These source terms have multiple plumes, which have been summed here for ease of comparison.
CF = containment failure.
CD = core damage.
VB = reactor vessel branch.

E.3.3.2 Other Pathway Impacts

Since the comparison of the new source term information to that used in the 1996 GEIS environmental impact projection shows that the amount of release of radioactive material in a severe accident is estimated to be less than estimated in the 1996 GEIS, the environmental impacts from the other pathways (contamination of open bodies of water, groundwater contamination, and economic impacts) will also be less than estimated in the 1996 GEIS.

E.3.3.3 Conclusion

More recent source term information indicates that the timing from dominant severe accident sequences, as quantified in NUREG/CR-6295 (NRC 1997b), is comparable to the analysis forming the basis of the 1996 GEIS. In most cases, the release frequencies and release fractions are significantly lower for the more recent estimate. Thus, the environmental impacts used as the basis for the 1996 GEIS (i.e., the frequency-weighted consequences) are higher than the impacts that would be estimated using the more recent source term information.

It is worth noting that a significant effort is ongoing to re-quantify realistic severe accident source terms under the State-of-the Art Reactor Consequence Analysis (SOARCA) Project. Preliminary results indicate that source term timing and magnitude may be significantly lower than quantified in previous studies (NRC 2008a). This information will be incorporated, as appropriate, in future revisions of this document.

E.3.4 Impact of Power Uprates

Power uprates are defined as the process of increasing the maximum power level at which a nuclear power plant may operate. Although power uprates have been approved by the NRC since 1977, the effects of power uprates since 1996 were not taken into account for the GEIS. Extended power uprates began to be approved in 1998. For BWRs, it became common for a power uprate to be between 10 and 20 percent, and for PWRs, up to 5 percent. The purpose of this section is to provide an assessment of the impacts of power uprates on severe accident scenarios and their environmental impacts.

The process of license amendments for power uprates requires licensees to evaluate the effects of the uprate on the safety of the plant. Design basis accidents were analyzed to determine the change in possible dose, should an accident occur. Most commonly, loss of coolant accidents, control rod drop accidents and fuel handling accidents were assessed. Whole body and thyroid doses were determined for the exclusion area boundary, the outer edge of the low population zone, and the main control room. These values must meet 10 CFR Part 100 and 10 CFR Part 50, Appendix A, General Design Criterion (GDC) 19 dose limits. The effects of power uprates on CDF and large early release frequency (LERF) are also assessed.

E.3.4.1 Airborne Pathway Impacts

Power uprates require using fuel with a higher percentage of uranium-235 or additional fresh fuel in order to derive more energy from the operation of the reactor. This results in a larger radionuclide inventory (particularly short-lived isotopes, assuming no change in burnup limits) in the core, than the same core at a lower power level. The larger radionuclide inventory

represents a larger source term for accidents and can result in higher doses to offsite populations in the event of a severe accident. Typically, short-lived isotopes are the main contributor to early fatalities. As stated in NUREG-1449 (NRC 1993), short-lived isotopes make up 80 percent of the dose following early release.

LERF represents the frequency of sequences that result in early fatalities. Thus, the impact of a power uprate on early fatalities can be gauged by considering the impact of the uprate on the LERF metric. To this end, Table E-14 presents the change in LERF calculated by each licensee who has been granted a power uprate of greater than 10 percent. As can be seen, the increase in LERFs range from a minimal impact to an increase of 30 percent (with a mean of 8.8 percent). This change is judged to be small to moderate.

Table E-14. Changes in LERF for Extended Power Uprates >10 Percent

Plant	Percent Increase in Power	Percent Increase in Internal Event LERF
Brunswick 1, 2	15	4.5
Clinton	20	5.5
Dresden 2, 3	17	10
Duane Arnold	15.3	16
Ginna	16.8	19
Hope Creek	15	30
Quad Cities 1, 2	17.8	4
Susquehanna 1, 2	13	<1
Vermont Yankee	20	5
Mean	16.4	8.8

E.3.4.2 Other Pathway Impacts

As discussed in previous sections, the change in impacts due to other pathways is viewed to be bounded by the change in the airborne pathway, consistent with the results obtained in the 1996 GEIS.

E.3.4.3 Conclusion

Power uprates would result in a small to (in some cases) moderate increase in the environmental impacts from a postulated accident. However, taken in combination with the

other information presented in this appendix, the increases would be bounded by the 95 percent UCB values in Tables 5.10 and 5.11 of the 1996 GEIS.

E.3.5 Impact of Higher Fuel Burnup

There has been continued movement toward higher fuel burnup, to allow for more efficient utilization of the fuel and longer operating cycles. An environmental assessment (EA) was published by the NRC in 1988 on the effects of increased peak burnup (to 60 GWd/MT, 5 percent by weight uranium-235). NUREG/CR-5009 (NRC 1988) is the basis for the EA. NUREG/CR-6703 (NRC 2001a) is a more current analysis using updated designs and data, and peak burnup to 75 GWd/MT.

The purpose of this section is to include the updated information from NUREG/CR-6703 into the GEIS to account for the effect of current and possible future increased fuel burnup on postulated accidents. Future peak burnups being considered are 62 GWd/MT for PWRs and 70 GWd/MT for BWRs.

E.3.5.1 Airborne Pathway Impacts

The environmental impacts of accidents where high burnup fuel is being used (assuming no change in plant power level) are due to the effects of an increased inventory of long-lived fission products. Long-lived fission products contribute primarily to latent health effects, and thus latent fatalities are used here as a measure of the impact of higher burnup fuel. Since latent fatalities are directly scalable to dose, the assessment is based upon the increase in population dose due to the use of high burnup fuel.

NUREG/CR-6703 (NRC 2001a) analyzed design basis accidents from full power for PWR and BWR reactors at different levels of fuel burnup. A PWR steam generator tube rupture and a BWR main steam line break were analyzed. Burnup was analyzed to 75 GWd/MT, at which point, fuel with more than 5 percent by weight uranium-235 would be required. As described on page 25 of that document, the models used do not account for natural processes and engineered safety features, so “more attention should be paid to trends in doses than to absolute values.”

Table E-15 shows doses at the Exclusion Area Boundary (EAB) and the total population dose stated in NUREG/CR-6703. The EAB dose includes contributions from inhalation, and external dose. The total population dose also includes contributions from contaminated foods as well. The increase in population dose is moderate (~38 percent) from 42 to 75 GWd/MT for PWRs. For BWRs, the net increase in population dose is small (~8 percent). Although the analysis in NUREG/CR-6703 is for design basis accidents, the percentage increase in impacts would be generally similar for severe accidents.

E.3.5.2 Other Pathway Impacts

As discussed in previous sections, the change in impacts due to other pathways is viewed to be bounded by the change in the airborne pathway, consistent with the results obtained in the 1996 GEIS.

Table E-15. LOCA Consequences as a Function of Fuel Burnup

Reactor Type	Peak-Rod Burnup (GWd/MT)	Individual Dose at 0.8 km [(a)] (rem) [(b)]	Mean Total Population Dose (person-rem) [(b)]
PWR	42	10	940,000
	50	10	1,100,000
	60	10	1,200,000
	62	10	1,200,000
	65	11	1,200,000
	70	11	1,300,000
	75	11	1,300,000
BWR	60	10	1,300,000
	62	10	1,300,000
	65	10	1,300,000
	70	11	1,400,000
	75	11	1,400,000

(a) 0.8 km = 0.5 mi.
(b) Note that these doses are on a per event basis, not a frequency (per year) basis.

E.3.5.3 Conclusion

Increased peak fuel burnup from 42 to 75 GWd/MT for PWRs, and 60 to 75 GWd/MT for BWRs, results in small to moderate increases (up to 38 percent) in the environmental impacts in the event of a severe accident. However, taken in combination with the other information presented in this appendix, the increases would be bounded by the 95 percent UCB values in Tables 5.10 and 5.11 of the 1996 GEIS.

E.3.6 Impact from Accidents at Low Power and Shutdown Conditions

The 1996 GEIS did not include an assessment of the environmental impacts of accidents initiated at low power or shutdown conditions. These conditions include power levels less than 5 percent, shutdown (with or without maintenance or plant modifications under way), and fuel handling. The safety concern under these conditions is that plant configurations may be established where not all plant safety systems and features would be operable (e.g., containment integrity may not be required), and activities (e.g., plant modification) could be under way that could not be done while at full power. Accordingly, accidents initiated at such conditions may have different initiators, progress differently, and have different consequences than those initiated at full power conditions. In addition, operating experience has shown that events affecting fuel cooling do occur during shutdown operation. Accordingly, the industry implemented a number of voluntary measures in response to NRC generic letters and bulletins, and in 1991 developed guidelines for the assessment of shutdown management and implementation of safety improvements (NUMARC 1991). As discussed in SECY-97-168 (NRC 1997c), these voluntary industry initiatives resulted in improved safety.

The purpose of this section is to provide an assessment of the risk from postulated severe accidents at low power and shutdown conditions relative to the risk from postulated severe accidents at full power conditions, including a comparison against the findings in the 1996 GEIS.

The conditions assessed are:

- Plant operation at power levels between 0 and 5 percent;
- Shutdown with containment open; and
- Fuel handling inside the containment structure.

Several sources of information are available to support this assessment. These include studies that have been done assessing actual events and the risk from accidents at low power and shutdown conditions. These studies are: (1) NUREG-1449 (NRC 1993); (2) NUREG/CR-6143 (NRC 1995b); and (3) NUREG/CR-6144 (NRC 1995a). In addition, in 1997, the NRC staff recommended a proposed rule be considered to address shutdown conditions. Although the Commission did not approve going forward with the proposed rule (see SRM-97-168, NRC 1997d), the technical basis for the proposed rule provides additional useful information.

E.3.6.1 Airborne Pathway Impacts

NUREG-1449 (NRC 1993) presents an analysis of actual events that have occurred at low power and shutdown conditions. This analysis includes an estimate of the conditional core damage frequency associated with each event and an overall assessment of the range of total core damage frequencies (mean value) that could result from events at low power and shutdown conditions. This range was from 10^{-5}/yr to 10^{-4}/yr.

NUREG/CR-6143 (NRC 1995b) and NUREG/CR-6144 (NRC 1995a) provide low power and shutdown risk assessments for two plants (Grand Gulf and Surry). For Grand Gulf, the mean core damage frequency stated in NUREG/CR-6143 is approximately 2×10^{-6}/yr and for Surry (NUREG/CR-6144) it is 4×10^{-6}/yr. However, such core damage frequencies need to be considered with respect to their consequences. Due to the decay time associated with low power and shutdown conditions (i.e., decay of short-lived isotopes and lower decay heat) and, in most cases, longer times available to take mitigative action, the offsite consequences would be less than for accidents from full power. However, in certain plant operating states, the containment in those states may be open. Thus, a higher conditional probability for containment bypass might exist.

NUREG/CR-6143 and NUREG/CR-6144 also provide estimates of the offsite airborne pathway consequences on human health from accidents (internal events only) at low power and shutdown conditions. Tables E-16 and E-17 list these estimates for Grand Gulf and Surry, respectively. Also shown for each plant are the airborne pathway offsite consequence results for accidents from full power from NUREG-1150 (NRC 1990c) (for internal events) and from the 1996 GEIS. As can be seen, the airborne pathway risk and consequences from accidents at low power and shutdown are comparable to those from full power, as quantified in these studies. Although the impacts for low power and shutdown conditions are somewhat greater (by about a factor of 2 to 5) for certain metrics, these differences are small in an absolute sense. Moreover, the consequences of accidents from low power and shutdown are significantly less than those stated in the 1996 GEIS (by more than an order of magnitude). Thus, even though the 1996 GEIS estimates regarding the airborne pathway environmental impact are for internal events only, their conservatism causes them to bound the impacts from accidents at low power and shutdown.

Table E-16. Impacts of Low Power and Shutdown Accidents (Grand Gulf)

Impact	Low Power/Shutdown Accidents NUREG/CR-6143 (95th percentile values)	Full Power Accidents Internal Events NUREG-1150 (95th percentile values)	Full Power Accidents Internal Events 1996 GEIS (95th percentile values)
Individual risk			
- EF [(a)] (1 mi)	~3×10^{-10}/yr	~1.5×10^{-10}/yr	
- LF [(b)] (10 mi)	~5×10^{-9}/yr	~1×10^{-9}/yr	
Total person-rem per year (entire region)	~28	~15	1441
Total early fatality risk	~4×10^{-8}/yr	~2.5×10^{-8}/yr	2.8×10^{-3}/yr
Total latent fatality risk	~1×10^{-2}/yr	~2.5×10^{-3}/yr	1.0/yr
CDF	5.6×10^{-6}/yr	1.2×0^{-5}/yr	2.4×10^{-5}/yr [(c)]

(a) EF = early fatality risk. The individual early fatality risk within one mile is the frequency (per year) that a person living within one mile of the site boundary will die within a year due to the accident. The entire population within one mile is considered to obtain an average value.
(b) LF = latent fatality risk. The individual latent cancer fatality risk within 10 miles is the frequency (per year) that a person living within 10 miles of the plant will die many years later from cancer due to radiation exposure received from the accident. The entire population within 10 miles is considered to obtain an average value.
(c) This is the CDF from the Grand Gulf original EIS.

Table E-17. Impacts of Low Power and Shutdown Accidents (Surry)

Impact	Low Power/Shutdown Accidents (NUREG/CR-6144) (95th percentile values)	Full Power Accidents Internal Events NUREG-1150 (95th percentile values)	Full Power Accidents Internal Events 1996 GEIS (95th percentile values)
Individual risk			
- EF [(a)] (1 mi)	~7×10^{-9}/yr	~4×10^{-8}/yr	
- LF [(b)] (10 mi)	~7×10^{-9}/yr	~1×10^{-8}/yr	
Total person-rem per year (entire region)	~1.3	~150	1200
Total early fatality risk	~2×10^{-7}/yr	~4×10^{-6}/yr	1.6×10^{-2}/yr
Total latent fatality risk	~5×10^{-2}/yr	~2.5×10^{-2}/yr	0.9/yr
CDF	1.9×10^{-5}/yr	1.3×10^{-4}/yr	

(a) EF = early fatality risk. The individual early fatality risk within one mile is the frequency (per year) that a person living within one mile of the site boundary will die within a year due to the accident. The entire population within one mile is considered to obtain an average value.
(b) LF = latent fatality risk. The individual latent cancer fatality risk within 10 miles is the frequency (per year) that a person living within 10 miles of the plant will die many years later from cancer due to radiation exposure received from the accident. The entire population within 10 miles is considered to obtain an average value.

E.3.6.2 Other Pathway Impacts

For the impacts from surface water and groundwater contamination from accidents at low power and shutdown, the estimates for accidents from full power (internal events only) in the 1996 GEIS can be used for comparison. With the airborne impacts from accidents at low power and shutdown (i.e., person-rem/yr) estimated to be less than the impacts from accidents at full power, the surface water contamination should likewise be less.

Section 5.3.3.4 of the 1996 GEIS concluded that the contribution of risk from the groundwater pathway for at-power accidents "generally contributes only a small fraction of that risk attributable to the atmospheric pathway but in a few cases may contribute a comparable risk." Groundwater contamination due to basemat melt-through would be less likely than for accidents at full power, due to the lower decay heat associated with low power and shutdown events. Thus, the risks portrayed in the 1996 GEIS are considered to be bounding.

With respect to the economic impacts, the lower estimated person-rem/yr from accidents at low power and shutdown should also result in lower economic impacts than from accidents at full power. This conclusion is consistent with the regulatory analysis supporting the proposed rule on shutdown conditions. In that analysis, the offsite property damage estimate for a severe accident at the Surry Plant was $800 million. Considering the frequency of such an event at low power and shutdown conditions where containment is either open or fails (approximately 3×10^{-6}/yr from NUREG/CR-6144), the annualized economic impact would be approximately $2400 per year. This is much less than the $1,146,600 per year stated in Table 5.31 of the 1996 GEIS for the economic impact at Surry of an accident from full power.

E.3.6.3 Conclusion

In summary, it is concluded that the environmental impacts from accidents at low power and shutdown conditions are generally comparable to those from accidents at full power when comparing the NUREG/CR-6143 (NRC 1995b) and NUREG/CR-6144 (NRC 1995a) values to NUREG-1150 (NRC 1990c) values. Although the impacts for low power and shutdown conditions could be somewhat greater than for full power (for certain metrics), the 1996 GEIS estimates of the environmental impact of severe accidents bound the potential impacts from accidents at low power and shutdown with margin. Finally, as cited above and discussed in SECY-97-168 (NRC 1997c), industry initiatives taken during the early 1990s have also contributed to the improved safety of low power and shutdown operation.

E.3.7 Impact from Accidents at Spent Fuel Pools

The 1996 GEIS did not include an explicit assessment of the environmental impacts of accidents at the spent fuel pools (SFPs) located at each reactor site. The 1996 GEIS did,

however, discuss qualitatively (see Section 5.2.3.1) the reasons why the impact of accidents at SFPs would be much less than that from reactor accidents. Thus, in Table B-1 of 10 CFR Part 51, it was concluded that accidents at SFPs could be classified as Category 1 and not require further analysis in support of license renewal. This was primarily due to the fact that the resolution of Generic Safety Issue 82, "Beyond Design Basis Accidents in Spent Fuel Pools," concluded that the risk from accidents at SFPs was low and, accordingly, no additional regulatory action was necessary. The analysis supporting this conclusion is contained in NUREG-1353 (NRC 1989).

Since issuance of the 1996 GEIS, additional analysis of the risk from spent fuel pool accidents has been performed and documented. The key document in this regard is NUREG-1738 (NRC 2001b). As a result of the September 11, 2001, terrorist attacks, additional analysis has been performed on SFP security, although much of this work is security-related information and not publically available. In addition, there are two other major activities of note: (1) a 2004 to 2005 study performed by the National Academies (National Research Council 2006b), and (2) a 2006 Petition for Rulemaking (see NRC 2008d).

The purpose of this section is to consider the risk from severe accidents in SFPs relative to the risk from severe accidents in reactors, including a comparison against the findings in the 1996 GEIS. The impacts considered are only those from spent fuel in the pool. Spent fuel assembly dry cask safety is not included, since cask safety is addressed under 10 CFR Part 72.

E.3.7.1 Airborne Pathway Impacts

The analysis contained in NUREG-1738 (NRC 2001b) assesses the impacts from accidents at a typical SFP at decommissioning nuclear power plants. The impacts assessed are those associated with the airborne pathway impact on human health. The analysis covers a range of decay times for the fuel stored in the pool, a number of initiating events, and some variations in emergency evacuation times, fission product releases, and seismic hazard. The initiating events included in the analysis are listed below.

- Seismic (for central and eastern United States sites)[a]
- Cask drop
- Loss of offsite power
- Internal fire

(a) Excludes Diablo Canyon, San Onofre, and WNP-2 (Columbia).

- Loss of pool cooling
- Loss of pool coolant inventory
- Accidental aircraft impact (although not deliberate impacts)
- Tornado missile

The SFP inventory assumed was 3½ core loads with an average fuel burnup of 60 GWd/MT. Although intended to be representative of the SFP in a typical decommissioning PWR or BWR, the assumed core inventory, burnup, and decay time range is also reasonably representative of that for operating PWRs and BWRs while at power. In addition to the above results, NUREG-1738 also assessed the risk from recriticality in the SFP and concluded that, given licensee surveillance and monitoring programs, the potential risk of such events is small.

The analysis conducted in NUREG-1738 assumed the plant was in its decommissioning phase and, thus, has fewer protective features for the prevention or mitigation of SFP accidents. Therefore, the impact analysis contained in NUREG-1738 is considered conservative. In addition, the NUREG-1738 impact analysis assumed that the zirconium fuel cladding would start to burn and the event would be nonrecoverable when the water level in the pool falls to within 3 feet above the top of the assemblies' active fuel region. This is also conservative and does not credit potential operator actions to prevent or mitigate SFP accidents beyond that point, or the fact that for a wide range of conditions spent fuel can be air-cooled. Table E-18 summarizes the airborne pathway impact on human health from a severe accident in a SFP (from the NUREG-1738 analysis) for a time period of 1 month to 2 years (i.e., a typical operating reactor fuel cycle). Ranges are given to account for differences in emergency planning and seismic hazard assumptions. The site characteristics used in NUREG-1738 were those from the Surry plant. Thus Table E-18 also presents Surry's site-specific results from NUREG-1150 (NRC 1990c) and the 1996 GEIS.

As can be seen in Table E-18, the impacts from SFP accidents at Surry (as calculated in NUREG-1738) are generally comparable to or smaller than the analogous NUREG-1150 internal event reactor accidents when using the low ruthenium release source term. For the high ruthenium release source term, the NUREG-1738 results are generally higher than the accompanying reactor results from NUREG-1150. For either source term, the NUREG-1738 impacts are much less than the conservative estimates of full power reactor accidents at Surry as estimated in the 1996 GEIS.

The impacts stated in NUREG-1738 are also similar to those calculated for the resolution of Generic Safety Issue 82, in which NUREG-1353 (NRC 1989) calculated a best-estimate population dose of 16 person-rem per year.[a] While the NUREG-1738 results are for the Surry

Table E-18. Impacts of Accidents at SFPs from NUREG-1738 [a]

	Spent Fuel Pools [b] (1 month to 2 years decay time)		Reactors		
	NUREG-1738 Low Ru Release (range of means)	**NUREG-1738 High Ru Release (range of means)**	**NUREG-1150 Surry (mean)**	**NUREG-1150 Surry (95th percentile)**	**1996 GEIS Surry (95th percentile)**
Individual risk					
- EF [c] (1 mi)	2×10^{-9} to 7×10^{-9}/yr	6×10^{-8} to 1×10^{-7}/yr	1.5×10^{-8}/yr	4×10^{-8}/yr	
- LF [d] (10 mi)	1×10^{-8}/yr	2×10^{-7}/yr	1.5×10^{-9}/yr	1×10^{-8}/yr	
Total person-rem per year	2.5 to 12 (50 mi)	8 to 60 (50 mi)	6 (50 mi) 30 (entire region)	30 (50 mi) 150 (150 mi)	1200 (150 mi)
Total early fatality risk	2×10^{-7} to 6×10^{6}/yr	1×10^{-5} to 5×10^{-4}/yr	1×10^{-6}/yr	3×10^{-6}/yr	1.6×10^{-2}/yr

(a) All values are approximate.
(b) Values are obtained from Figures 3.7-3, 3.7-4, 3.7-7, and 3.7-8 of NUREG-1738.
(c) EF = early fatality risk. The individual early fatality risk within one mile is the frequency (per year) that a person living within one mile of the site boundary will die within a year due to the accident. The entire population within one mile is considered to obtain an average value.
(d) LF = latent fatality risk. The individual latent cancer fatality risk within 10 miles is the frequency (per year) that a person living within 10 miles of the plant will die many years later from cancer due to radiation exposure received from the accident. The entire population within 10 miles is considered to obtain an average value.

site, individual risk metrics for early fatalities and latent fatalities should be relatively insensitive to the site-specific population (see pg. 3-28 of NUREG-1738) because these metrics reflect doses to the close-in population. In addition, while results are presented for both the low and high ruthenium source term, the low ruthenium source term is still viewed as the more accurate representation. Therefore, the risk and environmental impact from fires in SFPs as analyzed in NUREG-1738 are expected to be comparable to or lower than those from reactor accidents and are bounded by the 1996 GEIS.

Since the issuance of NUREG-1738 (NRC 2001b), and subsequent to the terrorist attacks of September 11, 2001, significant additional analyses have been performed that support the view that the risk of a successful terrorist attack (i.e., one that results in a zirconium fire) is very low. These analyses were conducted by the Sandia National Laboratories and are collectively referred to herein as the "Sandia studies." The Sandia studies are sensitive security-related information and are not available to the public. The Sandia studies considered spent fuel

(a) Taken from the Executive Summary of that report: total dose = 8×10^{6} person-rem; event frequency = 2×10^{-6} per year.

loading patterns and other aspects of a pressurized-water reactor SFP and a boiling-water reactor SFP, including the role that the circulation of air plays in the cooling of spent fuel. The Sandia studies indicated that there may be a significant amount of time between the initiating event (i.e., the event that causes the SFP water level to drop) and the spent fuel assemblies becoming partially or completely uncovered. In addition, the Sandia studies indicated that for conditions where air cooling may not be effective in preventing a zirconium fire, there is a significant amount of time between the spent fuel becoming uncovered and the possible onset of such a zirconium fire, thereby providing a substantial opportunity for both operator and system event mitigation.

The Sandia studies, which more fully account for relevant heat transfer and fluid flow mechanisms, also indicated that air cooling of spent fuel would be sufficient to prevent SFP zirconium fires at a point much earlier following fuel offload from the reactor than previously considered (e.g., in NUREG-1738). Thus, the fuel is more easily cooled, and the likelihood of a zirconium fire is therefore reduced.

Furthermore, additional mitigation strategies implemented subsequent to September 11, 2001, enhance spent fuel coolability and the potential to recover SFP water level and cooling prior to a potential zirconium fire. The Sandia studies also confirmed the effectiveness of these additional mitigation strategies to maintain spent fuel cooling in the event the pool is drained and its initial water inventory is reduced or lost entirely. Based on the more rigorous accident progression analyses, the recent mitigation enhancements, and NRC site evaluations of every SFP in the United States, the risk of an SFP zirconium fire initiation is expected to be less than reported in NUREG-1738 (NRC 2001b) and previous studies. For additional information on SFP safety and security, the reader is referred to the NRC's response to a National Academy of Sciences study on the topic (NRC 2005a) and the NRC's response to a recent Petition for Rulemaking (NRC 2008d).

E.3.7.2 Other Pathway Impacts

The NUREG-1738 (NRC 2001b) analysis did not address the impacts with respect to the other pathways (open bodies of water and groundwater). The 1996 GEIS estimated these impacts for reactor accidents from full power (internal events only) using the results from plant-specific reactor accident analysis to assess contamination of open bodies of water and from the Liquid Pathway Generic Study (NUREG-0440, NRC 1978) to assess the contamination of groundwater from basemat melt-through accidents.

In both cases, the impacts on human health from surface water and groundwater contamination are only a small fraction of those impacts from the airborne pathway, except in a few cases where the impacts are comparable. With the impacts from the airborne pathway associated with spent fuel pool accidents (as stated in NUREG-1738) being comparable to the impacts

from reactor accidents, as stated in NUREG-1150 (NRC 1990c), the impacts from SFP-related surface water and groundwater contamination may also be comparable, even though the SFP fuel inventory is several times that of the reactor. This is due to the lower probability of occurrence of SFP accidents, the effects of decay of the fission products on the radionuclide inventory, and the lower energy density of the fuel inventory, which makes basemat melt-through more unlikely.

The same conclusion can also be drawn with respect to the economic impacts. These impacts are related to the likelihood of the accidents and the cost of cleanup and food interdiction. Even with higher fuel inventories, the lower likelihood of accidents in the SFP reduces the economic impacts. For example, the UCB economic impact identified in Table 5.31 in the 1996 GEIS from full power reactor accidents at Surry is approximately 1.1×10^6 dollars/yr. The worst-case economic impacts estimated in past studies for SFP accidents ranged from approximately 1.8×10^4 dollars/yr to 1.2×10^5 dollars/yr.[(a)]

An issue related to the groundwater pathway that has received significant attention since the issuance of the 1996 GEIS is leakage of water from SFPs (or related systems) at Salem Unit 1, Indian Point Units 1 and 2, and Seabrook. Instances of this kind are adequately monitored and addressed via existing regulatory programs, and do not fall within the scope of this section. For more information on this topic, the reader is referred to NUREG-0933, Supplement 31, Section 3, Issue 202 (NRC 2007d) and NRC 2008b.

E.3.7.3 Conclusion

In summary, it is concluded that the environmental impacts from accidents at SFPs (as quantified in NUREG-1738 [NRC 2001b]) can be comparable to those from reactor accidents at full power (as estimated in NUREG-1150 [NRC 1990c]). Subsequent analyses performed, and mitigative measures employed, since 2001 have further lowered the risk of this class of accidents. In addition, even the conservative estimates from NUREG-1738 are much less than the impacts from full power reactor accidents as estimated in the 1996 GEIS. Therefore, the environmental impacts stated in the 1996 GEIS bound the impact from SFP accidents.

E.3.8 Impact of the Use of BEIR VII Risk Coefficients

Section 5.3.3.2.2 from the 1996 GEIS discussed adverse health effects from exposure to radiation and referenced several National Academy of Sciences reports (BEIR I, III, and V) (National Research Council 1972, 1980, 1990) as sources of risk coefficients for fatal cancers

(a) The former estimate uses information from Tables C.95 and C.101 of NUREG/BR-0184 (NRC 1997a), while the latter uses information from Tables 5.1.1 and 5.1.2 of NUREG-1353 (NRC 1989).

(i.e., latent fatalities) associated with radiation exposure. Benchmark evaluations of the exposure index methodology employed by the 1996 GEIS were conducted using the MELCOR Accident Consequence Code System (MACCS), as described in Section 5.3.3.2.3 of the original GEIS. MACCS is the predecessor of the currently used MACCS2 code, and represented the state-of-the-art for assessing risks associated with postulated severe reactor accidents at the time of the original GEIS. That study used a linear cancer model based on the BEIR V report (National Research Council 1990). The code-to-code comparisons suggest that latent fatality values in the FESs are an order of magnitude too low. Therefore, to account for this, the latent fatality results predicted from the FES values were multiplied by a factor of 10 to obtain the final predicted latent fatality results in the 1996 GEIS. This adjustment in combination with the use of 95th percentile UCB values ensured that the basis for health effects would be conservative.

In 2006, the National Research Council's Committee on the Biological Effects of Ionizing Radiation (BEIR) published BEIR VII, entitled *Health Risks from Exposure to Low Levels of Ionizing Radiation* (National Research Council 2006a). BEIR VII provides estimates of the risk of incidence and mortality for males and females (see Section 3.9.1.4 and Appendix D of this report for more information). There is a difference of approximately 20 percent in the fatal cancer risk coefficient based on International Commission on Radiological Protection (ICRP) recommendation (as described in ICRP 1991) and the BEIR VII report. The difference of 20 percent is within the margin of uncertainty associated with these estimates (see Appendix D.8.1.4 for a detailed discussion of the BEIR VII report).

The NRC staff completed a review of the BEIR VII report and documented its findings in NRC 2005c. In this paper, the NRC staff concluded that the findings presented in the BEIR VII report agree with the NRC's current understanding of the health risks from exposure to ionizing radiation. The NRC staff agreed with the BEIR VII report's major conclusion that current scientific evidence is consistent with the hypothesis that there is a linear, no-threshold dose response relationship between exposure to ionizing radiation and the development of cancer in humans. This conclusion is consistent with the process the NRC uses to develop its standards of radiological protection. Therefore, the NRC's regulations continue to be adequately protective of public health and safety and the environment. This general topic is discussed further in a 2007 denial of a Petition for Rulemaking, as discussed in NRC 2007e.

E.3.9 Uncertainties

Section 5.3.5 in the 1996 GEIS provides a discussion of the uncertainties associated with the analysis in the GEIS and in the individual plant EISs used to estimate the environmental impacts of severe accidents. The uncertainties discussed covered:

- The probability of an accident.

- The quantity and chemical form of radioactivity released.
- Atmospheric dispersion modeling for the radioactive plume transport, including:
  - Duration, energy release, and in-plant radionuclide decay time;
  - Meteorological sampling scheme used;
  - Emergency response effectiveness and warming time;
  - Dose conversion factors and dose-response relationships for early health consequences;
  - Dose conversion factors and dose-response relationships for latent health consequences;
  - Chronic exposure pathways; and
  - Economic data and modeling.
- Assumption of normality for random error components.
- The exposure-index method, and
  - Selection of exposure index parameters;
  - Selection of distances;
  - Regressing early fatalities for only large plants; and
  - Normalization of plants for latent fatalities, costs, and dose.

The 1996 GEIS recognized that the uncertainties in the estimated impacts could be large (i.e., from a factor of 10 to 1000). Reference was made to NUREG-1150 (NRC 1990c) as providing more state-of-the-art risk analysis that also considered uncertainties and that the cumulative effect of this analysis shows a reduction in risk.

In an attempt to help compensate for uncertainties, the 1996 GEIS used very conservative estimates of environmental impacts. These included:

- Use of the 95th percentile confidence values in estimating airborne pathway and economic impacts;
- Use of site-specific analysis for estimating surface water pathway impacts; and
- Use of NUREG-0440 (NRC 1978) results to bound the estimated groundwater pathway impacts.

It was generally concluded that even with uncertainties, the environmental impacts estimated in the 1996 GEIS were adequate for use.

Many of these same uncertainties also apply to the analysis used in this update. However, as discussed in Sections E.3.1 through E.3.8 of this revision, more recent information is used to supplement the estimate of the environmental impacts contained in the 1996 GEIS. In effect, the assessments contained in Sections E.3.1 through E.3.8 of this revision provide additional

information and insights into items that could be considered areas of uncertainty associated with the 1996 GEIS.

This more recent information also provides insights on additional sources of uncertainty from those discussed in the 1996 GEIS. Each of these insights on additional sources of uncertainty is discussed below.

E.3.9.1 Emergency Planning (EP)

The 1996 GEIS (in Section 5.3.5.3) included a discussion on uncertainties associated with EP. However, no quantitative information on the magnitude of these uncertainties was presented. To provide a perspective on the magnitude of the uncertainty, the following information is provided.

NUREG-1150 (NRC 1990c) and the SFP accident analysis in NUREG-1738 (NRC 2001b) specifically assessed the effect of different EP assumptions on the airborne pathway impacts. NUREG-1150 assessed four alternative emergency response modes in addition to its base case (99.5 percent of the population within 10 mi was evacuated in 4.5 hours with no sheltering). These alternatives were assessed for reactor accidents from full power, with the Surry and Peach Bottom analyses including seismic and fire initiated events as well as internal events. For the worst case (no evacuation, no sheltering, and early relocation), the estimated early fatalities per year were approximately a factor of 10 higher than the base case.

The SFP accident analysis in NUREG-1738 also specifically assessed the effect of variations in emergency evacuation. The variations were assessed against the base case used in the NUREG-1150 risk analysis. Doses beyond 20 mi were not calculated. Cases where the evacuation was faster, slower, and where fewer people were evacuated were assessed. As can be expected, improved evacuation scenarios resulted in smaller impacts, and relaxed evacuation scenarios resulted in additional impacts. The impacts associated with relaxed evacuation scenarios did go up, but only a few percent in societal dose (i.e., person-rem) and up to a factor of 10 in early fatalities. However, these impacts are still far below the conservative characterization of the impacts for reactor accidents contained in the original GEIS.

E.3.9.2 Population Increase

The assessments of environmental impacts contained in NUREG-1150 (NRC 1990c), NUREG-1738 (NRC 2001b), NUREG-1449 (NRC 1993), NUREG/CR-5305 (NRC 1992), NUREG/CR-6143 (NRC 1995b) and NUREG/CR-6144 (NRC 1995a) are all based on populations that existed in the mid-1980s to mid-1990s. The 1996 GEIS estimated impacts at the mid-year of each plant's license renewal period (i.e., 2030 to 2050). To adjust the impacts

estimated in the NUREGs and NUREG/CRs to the mid-year of the assessed plant's license renewal period, the information (i.e., exposure indexes [EIs]) in the 1996 GEIS can be used. The EIs adjust a plant's airborne and economic impacts from the year 2000 to its mid-year license renewal period based on population increases. These adjustments result in anywhere from a 5 to a 30 percent increase in impacts, depending upon the plant being assessed. Therefore, the effect of increased population around the plant does not generally result in significant increases in impacts.

E.4 Severe Accident Mitigation Alternatives (SAMAs)

In Section 5.4 of the 1996 GEIS, the purpose and role of severe accident mitigation design alternatives (SAMDAs) in the license renewal process are discussed. Severe accident mitigation alternatives (SAMAs) include design alternatives (SAMDAs) and alternatives that involve changes in procedures and training. With respect to this revision, the purpose and objectives of SAMAs remain unchanged.

The purpose of this section is to discuss the impacts on SAMA analysis of the assessments presented in this revision. By way of an introduction, it should be noted that since publication of this 1996 GEIS, many improvements have occurred that have enhanced reactor safety. These are discussed in Section E.2 of this revision and, as can be seen in improved plant performance measures, have been effective. Even so, the SAMA analyses that have been performed to date have found SAMAs that were cost-beneficial, or at least possibly cost-beneficial subject to further analysis, in approximately half of the plants. However, none of the SAMAs identified related to managing the effects of aging during the period of extended operation. Therefore, they did not need to be implemented as part of license renewal, pursuant to the regulations in 10 CFR Part 54. In general, the cost-beneficial SAMAs were identified for further evaluation by the licensee under the current operating license. In several cases, the applicant has decided to implement the modifications even though they were not related to license renewal (NRC 2006a).

The SAMA analysis performed in support of license renewal has focused on those areas of greatest risk (accidents initiated by internal and external events) and on measures that could result in the greatest risk reduction in a cost-beneficial fashion. Even though the 1996 GEIS did not explicitly consider accidents initiated by external events in estimating the environmental impacts from severe accidents, the environmental impacts from external events have been included in an applicant's SAMA analysis for license renewal, by following the guidance contained in NEI 05-01, Rev. A (NEI 2005). This guidance (which was endorsed by the NRC in Interim Staff Guidance LR-ISG-2006-03, [NRC 2007a]) calls for the consideration of external events in assessing SAMAs. External events are considered by multiplying the internal event

risk to account for any increase in risk caused by external events. The multiplication factor is determined on a plant-specific basis considering previous and current external event analysis (e.g., IPEEE). Given the existing information on the contribution to risk from external events, the approach described in NEI 05-01, Rev. A continues to be a reasonable approach to address the external event risk contribution.

This revision has assessed other potential contributors to risk. Therefore, it is reasonable to assess whether those contributors should be included in the SAMA analysis. Specifically, these contributors are:

- Power uprates;
- The use of higher burnup fuel;
- Accidents from low power and shutdown conditions; and
- Accidents at SFPs.

With respect to power uprates and the use of higher burnup fuel, the increased impacts are small compared to the impacts in the 1996 GEIS, and these factors are included in any severe accident assessment for license renewal. Therefore, no additional SAMA analysis is required.

With respect to accidents from low power and shutdown conditions (which are not currently included in SAMA analysis), the likelihood and risks are generally lower than those of accidents from full power. In addition, there have been industry initiatives to improve low power and shutdown safety. It is also likely that some SAMAs identified as a result of assessing risks from accidents at full power would provide benefits to accidents from low power. Therefore, the potential for cost-effective SAMAs related to low power and shutdown accidents is substantially less than for accidents at full power. Accordingly, it is reasonable to continue to exclude low power and shutdown conditions from SAMA consideration.

With respect to accidents in SFPs, the additional mitigative measures implemented following the attacks of September 11, 2001, make the potential for cost-effective SAMAs related to SFP accidents substantially less than for reactor accidents. Therefore, it is reasonable to conclude that accidents at SFPs do not need to be considered in the SAMA analysis, and no change is warranted from its current Category 1 designation in Table B-1 of 10 CFR Part 51. Accordingly, the current SAMA process is considered adequate for use in future SAMA analyses.

E.5 Summary and Conclusion

The 1996 GEIS estimated the environmental impacts on human health and economic factors from full power severe reactor accidents initiated by internal events. Sections E.3.1 through E.3.8 of this revision assessed the impacts of new information and additional accident considerations on the environmental impact of severe accidents contained in the 1996 GEIS. In addition, the impact of uncertainties associated with the new information is assessed in Section E.3.9. The purpose of this section is to discuss the cumulative effects of the new information on the environmental impacts and uncertainties stated in the 1996 GEIS and to state what conclusions can be drawn.

The different sources of new information can be generally categorized by their effect of either decreasing, not affecting, or increasing the best-estimate environmental impacts associated with postulated severe accidents. Those areas where a decrease in best-estimate impacts would be expected are:

- New internal events information (decreases by an order of magnitude)
- New source term information (significant decreases)

Areas likely leading to either a small change or no change include:

- Use of BEIR VII risk coefficients

Lastly, those areas leading to an increase in best-estimate impacts would consist of:

- Consideration of external events (comparable to internal event impacts)
- Power uprates (small to moderate increase)
- Higher fuel burnup (small to moderate increases)
- Low power and shutdown events (could be comparable to internal event impacts)
- Spent fuel pool accidents (could be comparable to internal event impacts)

Given the difficulty in conducting a rigorous aggregation of these results (due to the differences in the information sources utilized), a fairly simple approach is taken. The latter group contains three areas where the increase could be comparable to the current risk and two areas where the increase could approach 30 to 40 percent. The net increase from these five areas would

therefore be approximately 470 percent[(a)] (increase by a factor of 4.7). The reduction in risk due to newer internal event information would account for a decrease by a factor of 5 to 100. Some of the reduction in internal event risk is due to newer source term information, so this area will not be double-counted here. The net effect of an increase on the order of 500 percent and a decrease on the order of 500 percent to 10,000 percent would be a reduction in estimated impacts.

Furthermore, even if one assumed that the net effect of the new information was no change in risk, the information provided throughout this appendix has demonstrated that the level of conservatism in the upper bound estimates utilized in the 1996 GEIS is much larger than the individual (or cumulative) deltas from the updated information. In particular, Section E.3.1 demonstrated that the GEIS values were a factor of 2 to 4 higher than the underlying EIS values.

With respect to uncertainties, the 1996 GEIS contained an assessment of uncertainties in the information used to estimate the environmental impacts. Section 5.3.5 of the 1996 GEIS discusses the uncertainties and concludes that they could cause the impacts to vary anywhere from a factor of 10 to a factor of 1000. This range of uncertainties bounds the uncertainties discussed in Section E.3.9 above, which ranged from a factor of 3 to 10, as well as the uncertainties brought out by the other sources of new information.

Given the discussion in Sections E.3.1 through E.3.8, it is concluded that the reduction in environmental impacts from the use of new information outweighs any increases resulting from new considerations. As a result, the findings in the 1996 GEIS remain valid. In addition, it is reasonable that in license renewal applications, the impacts from reactor accidents at full power, including internal and external events, should continue to be considered in assessing SAMAs. The impacts of all other new information do not contribute sufficiently to the environmental impacts to warrant their inclusion in the SAMA analysis, since the likelihood of finding cost-effective plant improvements is small. Table E-19 provides a summary of the conclusions discussed above.

(a) This approximation simply assumes that each comparable area results in an increase of 100 percent and the other two areas (uprates and burnup) each result in an increase of 35 percent.

Table E-19. Summary of Conclusions

Topic (Section)	Conclusions
New Internal Events Information (Section E.3.1)	New information on the risk and environmental impacts of severe accidents caused by internal events indicates that PWR and BWR CDFs are generally comparable to or less than those forming the basis of the 1996 GEIS. In some cases, these differences are significant (approaching one order of magnitude). Comparison of population dose from newer assessments illustrates a reduction in impact by a factor of 5 to 100 when compared to older assessments, and an additional factor of 2 to 4 due to the conservatism built into the 1996 GEIS values. This would also mean that contamination of open bodies of water and economic impacts would, in most cases, be significantly less. Additionally, the likelihood of basemat melt-through accidents is significantly less than that used in the analysis supporting the 1996 GEIS.
Consideration of External Events (Section E.3.2)	The 1996 GEIS did not explicitly consider severe accidents initiated by external events in assessing environmental impacts. When the environmental impacts of external events are considered, they can be comparable to those from internal events; however, they are generally significantly lower than the estimates used in the 1996 GEIS. This conclusion would also apply to the contamination of open bodies of water and groundwater and economic impacts.
New Source Term Information (Section E.3.3)	More recent source term information indicates that the timing from dominant severe accident sequences, as quantified in NUREG/CR-6295, is comparable to the analysis forming the basis of the 1996 GEIS. In most cases, the release frequencies and release fractions are significantly lower for the more recent estimate. Thus, the environmental impacts used as the basis for the 1996 GEIS are higher than the impacts that would be estimated using the more recent source term information.
Power Uprates (Section E.3.4)	Based on a comparison of the change in LERF for extended power uprates, a small to moderate increase in environmental impacts results from the increase in operating power level.
Higher Fuel Burnup (Section E.3.5)	Increased peak fuel burnup from 42 to 75 GWd/MT for PWRs, and 60 to 75 GWd/MT for BWRs, is estimated to result in small to moderate increases (up to 38 percent) in the environmental impacts in the event of a severe accident.
Consideration of Low Power and Shutdown Events (Section E.3.6)	The environmental impacts from accidents at low power and shutdown conditions are generally comparable to those from accidents at full power when comparing the NUREG/CR-6143 and NUREG/CR-6144 values to NUREG-1150 values. Even so, the 1996 GEIS estimates of the environmental impact of severe accidents bound the potential impacts from accidents at low power and shutdown. Finally, as cited above and discussed in SECY-97-168, industry initiatives taken during the early 1990s have also contributed to the improved safety of low power and shutdown operation.

Table E-19. Summary of Conclusions

Topic (Section)	Conclusions
Consideration of Spent Fuel Pool Accidents (Section E.3.7)	The environmental impacts from accidents at SFPs (as quantified in NUREG-1738) can be comparable to those from reactor accidents at full power (as estimated in NUREG-1150). Subsequent analyses performed, and mitigative measures employed, since 2001 have further lowered the risk of this class of accidents. In addition, even the conservative estimates from NUREG-1738 are much less than the impacts from full power reactor accidents as estimated in the 1996 GEIS.
Use of BEIR VII Risk Coefficient (Section E.3.8)	Use of newer risk coefficients such as in BEIR VII is expected to have a small impact on the results presented in the 1996 GEIS.
Uncertainties (Section E.3.9)	The impact and magnitude of uncertainties, as estimated in the 1996 GEIS, bound the uncertainties introduced by the new information and considerations.
SAMAs (Section E.4)	The current process and scope of SAMA analysis are sufficient for determining the need for additional mitigative measures.
Summary and Conclusion (Section E.5)	Given the new and updated information, the reduction in estimated environmental impacts from the use of new internal event and source term information outweighs any increases from the consideration of external events, power uprates, higher fuel burnup, low power and shutdown risk, and SFP risk.

E.6 References

10 CFR Part 50. *Code of Federal Regulations*, Title 10, *Energy*, Part 50, "Domestic Licensing of Production and Utilization Facilities."

10 CFR Part 51. *Code of Federal Regulations*, Title 10, *Energy,* Part 51, "Environmental Protection Regulations for Domestic Licensing and Related Regulatory Functions."

10 CFR Part 71. *Code of Federal Regulations*, Title 10, *Energy*, Part 71, "Packaging and Transportation of Radioactive Material."

10 CFR Part 72. *Code of Federal Regulations*, Title 10, *Energy*, Part 72, "Licensing Requirements for the Independent Storage of Spent Nuclear Fuel, High-Level Radioactive Waste, and Reactor-Related Greater Than Class C Waste."

10 CFR Part 73. *Code of Federal Regulations*, Title 10, *Energy*, Part 73, "Physical Protection of Plants and Materials."

10 CFR Part 100. *Code of Federal Regulations*, Title 10, *Energy*, Part 100, "Reactor Site Criteria."

International Commission on Radiological Protection (ICRP). 1991. *1990 Recommendations of the International Commission on Radiological Protection*, ICRP Publication 60, Pergamon Press, Oxford, United Kingdom.

National Research Council. 1972. *The Effects on Populations of Exposure to Low Levels of Ionizing Radiation (BEIR I)*. National Academies Press, Washington, D.C.

National Research Council. 1980. *The Effects on Populations of Exposure to Low Levels of Ionizing Radiation (BEIR III)*. National Academies Press, Washington, D.C.

National Research Council. 1990. *Health Effects of Exposure to Low Levels of Ionizing Radiation (BEIR V)*. National Academies Press, Washington, D.C.

National Research Council. 2006a. Committee on the Biological Effects of Ionizing Radiation (BEIR), BEIR VII, *Health Risks from Exposure to Low Levels of Ionizing Radiation*. The National Academies Press, Washington, D.C.

National Research Council. 2006b. *Safety and Security of Commercial Spent Nuclear Fuel Storage*. The National Academies Press, Washington, D.C.

Nuclear Energy Institute (NEI). 2005. *SAMA Analysis Guidance Document,* Revision A, NEI-05-01. (November 2005).

Nuclear Management and Resources Council (NUMARC). 1991. *Guidelines for Industry Actions to Assess Shutdown Management*, NUMARC 91-06. (December 1991).

U.S. Nuclear Regulatory Commission (NRC). 1975. *Reactor Safety Study – An Assessment of Accident Risks in U.S. Commercial Nuclear Power Plants,* WASH-1400, NUREG-75/014. (October 1975).

U.S. Nuclear Regulatory Commission (NRC). 1978. *Liquid Pathway Generic Study*, NUREG-0440. (February 1978).

U.S. Nuclear Regulatory Commission (NRC). 1982. *The Development of Severe Reactor Accident Source Terms: 1957–1981,* NUREG-0773. (November 1982).

U.S. Nuclear Regulatory Commission (NRC). 1988. *Assessment of the Use of Extended Burn-up Fuel in Light Water Power Reactors*, NUREG/CR-5009. (February 1988).

U.S. Nuclear Regulatory Commission (NRC). 1989. *Regulatory Analysis for the Resolution of Generic Issue 82*, NUREG-1353. (April 1989).

U.S. Nuclear Regulatory Commission (NRC). 1990a. *Evaluation of Severe Accident Risks: Surry Unit 1*, NUREG/CR-4551 Volume 3, Revision 1. (October 1990).

U.S. Nuclear Regulatory Commission (NRC). 1990b. *Evaluation of Severe Accident Risks: Peach Bottom, Unit 2*, NUREG/CR-4551 Volume 4, Revision 1. (December 1990).

U.S. Nuclear Regulatory Commission (NRC). 1990c. *Severe Accident Risk: An Assessment for Five U.S. Nuclear Power Plants*, NUREG-1150. (December 1990).

U.S. Nuclear Regulatory Commission (NRC). 1992. *Integrated Risk Assessment for the LaSalle Unit 2 Nuclear Power Plant*, NUREG/CR-5305. (August 1992).

U.S. Nuclear Regulatory Commission (NRC). 1993. *Shutdown and Low Power Operation at Commercial NPPs in the United States*, NUREG-1449. (September 1993).

U.S. Nuclear Regulatory Commission (NRC). 1995a. *Evaluation of Potential Severe Accidents During Low Power and Shutdown Operations at Surry, Unit 1*, NUREG/CR-6144. (May 1995).

U.S. Nuclear Regulatory Commission (NRC). 1995b. *Evaluation of Potential Severe Accidents During Low Power Shutdown Operation at Grand Gulf, Unit 1*, NUREG/CR-6143. (July 1995).

U.S. Nuclear Regulatory Commission (NRC). 1996. *Generic Environmental Impact Statement for License Renewal of Nuclear Plants*. NUREG-1437, Vols. 1 and 2. Office of Nuclear Reactor Regulation, Washington, D.C.

U.S. Nuclear Regulatory Commission (NRC). 1997a. *Regulatory Analysis Technical Evaluation Handbook*, NUREG/BR-0184. (January 1997).

U.S. Nuclear Regulatory Commission (NRC). 1997b. *Reassessment of Selected Factors Affecting Siting of Nuclear Power Plants*, NUREG/CR-6295. (February 1997).

U.S. Nuclear Regulatory Commission (NRC). 1997c. *Issuance for Public Comment of Proposed Rulemaking Package for Shutdown and Fuel Storage Pool Operation*, SECY-97-168. (July 30, 1997).

U.S. Nuclear Regulatory Commission (NRC). 1997d. *Issuance for Public Comment of Proposed Rulemaking Package for Shutdown and Fuel Storage Pool Operation*, SRM-SECY-97-168. (December 11, 1997).

U.S. Nuclear Regulatory Commission (NRC). 1999. *Generic Environmental Impact Statement for License Renewal of Nuclear Plants, Main Report*, "Section 6.3 – Transportation, Table 9.1, Summary of Findings on NEPA Issues for License Renewal of Nuclear Power Plants, Final Report." NUREG-1437, Vol. 1, Addendum 1. Office of Nuclear Reactor Regulation, Washington, D.C.

U.S. Nuclear Regulatory Commission (NRC). 2001a. *Environmental Impact of Extending Fuel Burn-up Above 60 GWd/MT*, NUREG/CR-6703. (January 2001).

U.S. Nuclear Regulatory Commission (NRC). 2001b. *Technical Study of Spent Fuel Pool Accident Risk and Decommissioning Nuclear Power Plants*, NUREG-1738. (February 2001).

U.S. Nuclear Regulatory Commission (NRC). 2001c. *Generic Aging Lessons Learned Report*, NUREG-1801. (July 2001).

U.S. Nuclear Regulatory Commission (NRC). 2003. *Perspectives Gained from the Individual Plant Examination of External Events (IPEEE)*, NUREG-1742. (April 2003).

U.S. Nuclear Regulatory Commission (NRC). 2004. *Protecting Our Nation – Since 9-11-01*, NUREG/BR-0314. (September 2004).

U.S. Nuclear Regulatory Commission (NRC). 2005a. Letter from Nils J. Diaz (NRC Chairman) to Senator Pete V. Domenici (Chairman, Subcommittee on Energy and Water Development). (March 14, 2005).

U.S. Nuclear Regulatory Commission (NRC). 2005b. *Notice of Extension of the Public Comment Period for Scoping Process to Prepare an Environmental Impact Statement for the License Renewal of Nuclear Power Plants*, *Federal Register*, Vol. 70, No. 190, p. 57628. (October 3, 2005).

U.S. Nuclear Regulatory Commission (NRC). 2005c. *Staff Review of the National Academies Study of the Health Risks from Exposure to Low Levels of Ionizing Radiation (BEIR VII)*, SECY-05-0202. (October 29, 2005).

U.S. Nuclear Regulatory Commission (NRC). 2006a. *Frequently Asked Questions on License Renewal of Nuclear Power Reactors*, NUREG-1850. (March 2006).

U.S. Nuclear Regulatory Commission (NRC). 2006b. *Mitigation of Spent Fuel Loss-of-Coolant Inventory Accidents and Extension of Reference Plant Analyses to Other Spent Fuel Pools*, Sandia Letter Report, Revision, (November 2, 2006).

U.S. Nuclear Regulatory Commission (NRC). 2007a. Memorandum from Pao-Tsin Kuo (NRC) to James Riley (NEI) entitled, "Final License Renewal Interim Staff Guidance LR-ISG-2006-003: Staff Guidance for Preparing Severe Accident Mitigation Alternatives Analyses." (August 2, 2007).

U.S. Nuclear Regulatory Commission (NRC). 2007b. Memorandum from Stewart Bailey (NRC) to James Scarola (Brunswick Steam Electric Plant) entitled, "Brunswick Steam Electric Plant, Units 1 and 2 – Conforming License Amendments to Incorporate the Mitigation Strategies Required by Section B.5.b. of Commission Order EA-02-026 and the Radiological Protection Mitigation Strategies Required by Commission Order EA-06-137 (TAC Nos. MD4516 and MD 4517)." (August 9, 2007).

U.S. Nuclear Regulatory Commission (NRC). 2007c. *2007–2008 Information Digest*, NUREG-1350, Vol. 19. (August 2007).

U.S. Nuclear Regulatory Commission (NRC). 2007d. *A Prioritization of Generic Safety Issues*, NUREG-0933, Supplement 31. (September 2007).

U.S. Nuclear Regulatory Commission (NRC). 2007e. Denial of Petition for Rulemaking PRM-51-11. *Federal Register*, Vol. 72, No. 240, p. 71083. (December 14, 2007).

U.S. Nuclear Regulatory Commission (NRC). 2008a. "State-of-the-Art Reactor Consequence Analyses (SOARCA) Project Accident Analysis," Randall Gauntt and Charles Tinkler, presented at the 2007 Regulatory Information Conference (RIC), Rockville, MD. (March 11, 2008).

U.S. Nuclear Regulatory Commission (NRC). 2008b. Letter from M. Gamberoni (NRC) to J. Pollock (Entergy Nuclear Operations) entitled, "Indian Point Nuclear Generating Units 1 & 2 – NRC Inspection Report Nos. 05000003/2007010 and 05000247/2007010." (May 13, 2008).

U.S. Nuclear Regulatory Commission (NRC). 2008c. *Industry Performance Data*. Available URL: http://nrcoe.inel.gov/results/index.cfm?fuseaction=IndustryPerf.showMenu (Accessed August 4, 2008).

U.S. Nuclear Regulatory Commission (NRC). 2008d. "Denial of Petition for Rulemaking PRM-51-10 and PRM-51-12," *Federal Register*, Vol. 73, No. 154, p. 46204. (August 8, 2008).

U.S. Nuclear Regulatory Commission (NRC). 2008e. *Resolution of Generic Safety Issues*, NUREG-0933, Main Report and Supplements 1–32 (August).

Appendix F

Applicable Laws, Regulations, and Other Requirements

Appendix F

Applicable Laws, Regulations, and Other Requirements

F.1 Introduction

This appendix presents a brief discussion of Federal and State laws, regulations, and other requirements that may be affected by the renewal and continued operation of U.S. Nuclear Regulatory Commission (NRC)-licensed nuclear power plants. It provides additional information about environmental laws and regulations applicable to license renewal that were first introduced in Chapter 3, "Affected Environment." These include Federal and State laws, regulations, and other requirements designed to protect the environment, including land and water use, air quality, aquatic resources, terrestrial resources, radiological impacts, solid waste, chemical impacts, and socioeconomic conditions.

Applicable Federal and State laws and regulations presented in this part include

(1) laws and regulations that could require the NRC or the applicant to undergo a *new* authorization or consultation process with Federal or State agencies outside the NRC or

(2) laws and executive orders that could require the NRC or the applicant to *renew* authorizations currently granted or hold additional consultations with Federal or State agencies outside the NRC.

This appendix is provided as a general overview to assist the applicant in identifying environmental and natural resources laws that may affect the license renewal process. This is not intended as a complete and final list, and the applicant is reminded that a variety of additional local and regional requirements may exist for the specific plant site.

Section F.3 identifies Federal laws and regulations applicable to license renewal. Section F.4 discusses Executive Orders. Section F.5 identifies the applicable NRC regulations. Section F.6 discusses applicable State laws, regulations, agreements, and requirements that are applicable to license renewal. Section F.7 discusses emergency management and response laws, regulations, and executive orders. Section F.8 discusses consultations with agencies and Federally recognized American Indian Nations. These regulatory requirements address issues such as protection of public health and the environment, worker safety, historic and cultural resources, and emergency planning.

F.2 Background

NRC is required to ensure that licensed nuclear power plants are operated in a manner that ensures the protection of public health, safety, and the environment. As part of the National Environmental Policy Act (NEPA) process, an agency must consider whether an action could threaten a violation of any Federal, State, or local law or requirement (40 *Code of Federal Regulations* [CFR] 1508.27(b)10) or require a permit, license, or other entitlement (40 CFR 1502.25). This appendix identifies and summarizes all applicable Federal, State, and local laws and regulations, requirements, agreements, and permits that relate to the continued operation of NRC-licensed nuclear power plants.

There are a number of Federal environmental laws that affect environmental protection, health, safety, compliance, and/or consultation at every NRC-licensed nuclear power plant location. In addition, certain environmental requirements have been delegated to State authorities for enforcement and implementation. Furthermore, State legislatures have adopted laws to protect health and safety and the environment. It is NRC's policy to make sure nuclear power plants are operated in a manner that ensures the protection of public health, safety, and the environment through compliance with all applicable Federal and State laws, regulations, and other requirements.

F.3 Applicable Federal Laws and Regulations

The regulations applicable to the operation of NRC-licensed nuclear power plants encompass a broad range of Federal and State laws, requirements, Executive Orders, and agreements addressing cultural, environmental, health and safety, transportation, and other issues. Generally, these regulations are relevant to how the work involved in performing a Proposed Action would be conducted to protect workers, the public, and cultural and environmental resources. Some of these require permits or consultation with other agencies or governing bodies. The Federal laws applicable to the review of NRC license renewal applications are identified and briefly discussed in this section, and are presented in alphabetical order.

American Indian Religious Freedom Act (AIRFA) of 1978 (42 United States Code [USC] 1996) – The *American Indian Religious Freedom Act* protects Native Americans' rights of freedom to believe, express, and exercise traditional religions.

Antiquities Act of 1906, as amended (16 USC 431–433) – The *Antiquities Act* protects historic and prehistoric ruins, monuments, and antiquities, including paleontological resources, on Federally controlled lands from appropriation, excavation, injury, and destruction without permission.

Archaeological and Historic Preservation Act of 1960, as amended (16 USC 469 et seq.) – The *Archaeological and Historic Preservation Act* establishes procedures for preserving historical and archeological resources. Analysis of environmental compliance included assessing the energy alternatives for possible impacts on prehistoric, historic, and traditional cultural resources.

Archaeological Resources Protection Act of 1979, as amended (16 USC 470aa et seq.) – The *Archaeological Resources Protection Act* requires a permit for any excavation or removal of archaeological resources from Federal or American Indian lands. Excavations must be undertaken for the purpose of furthering archaeological knowledge in the public interest, and resources removed are to remain the property of the United States. Consent must be obtained from the American Indian Tribe or the Federal agency having authority over the land on which a resource is located before issuance of a permit. The permit must contain terms and conditions requested by the Tribe or Federal agency.

Atomic Energy Act of 1954 (42 USC 2011 et seq.) – The 1954 *Atomic Energy Act* (AEA), as amended, and the *Energy Reorganization Act of 1974* (42 USC §5801 et seq.) give the NRC the licensing and regulatory authority for nuclear energy uses within the commercial sector. It gives NRC responsibility for licensing and regulating commercial uses of atomic energy and allows the NRC to establish dose and concentration limits for protection of workers and the public for activities under NRC jurisdiction. NRC implements its responsibilities under the AEA through regulations set forth in Title 10 CFR.

Bald and Golden Eagle Protection Act of 1940, as amended (16 USC 668–668d) – The *Bald and Golden Eagle Protection Act* makes it unlawful to take, pursue, molest, or disturb bald (American) and golden eagles, their nests, or their eggs anywhere in the United States. The U.S. Fish and Wildlife Service (USFWS) reviews NRC environmental impact statements to determine whether the activities analyzed would comply with the *Bald and Golden Eagle Protection Act*.

Clean Air Act of 1970, as amended (42 USC 7401 et seq.) – The *Clean Air Act* (CAA) is intended to "protect and enhance the quality of the Nation's air resources so as to promote the public health and welfare and the productive capacity of its population." The CAA establishes regulations to ensure air quality and authorizes individual States to manage permits. Section 118 of the CAA requires each Federal agency with jurisdiction over properties or facilities engaged in any activity that might result in the discharge of air pollutants, to comply with all Federal, State, inter-State, and local requirements with regard to the control and abatement of air pollution. Section 109 of the CAA directs the U.S. Environmental Protection Agency (EPA) to set National Ambient Air Quality Standards (NAAQS) for criteria pollutants. The EPA has identified and set NAAQS for the following criteria pollutants: particulate matter, sulfur dioxide, carbon monoxide, ozone, nitrogen dioxide, and lead. Section 111 of the CAA

requires establishment of national performance standards for new or modified stationary sources of atmospheric pollutants. Section 160 of the CAA requires that specific emission increases must be evaluated prior to permit approval in order to prevent significant deterioration of air quality. Section 112 requires specific standards for release of hazardous air pollutants (including radionuclides). These standards are implemented through plans developed by each State and approved by the EPA. The CAA requires sources to meet standards and obtain permits to satisfy those standards. Nuclear power plants may be required to comply with the CAA Title V, Sections 501–507, for sources subject to new source performance standards or sources subject to National Emission Standards for Hazardous Air Pollutants. Emissions of air pollutants are regulated by the EPA in 40 CFR Parts 50 to 99.

Clean Water Act (33 USC 1251 et seq.) – The *Clean Water Act* (CWA; formerly the *Federal Water Pollution Control Act*) was enacted to "restore and maintain the chemical, physical, and biological integrity of the Nation's water." The Act requires all branches of the Federal Government with jurisdiction over properties or facilities engaged in any activity that might result in a discharge or runoff of pollutants to surface waters, to comply with Federal, State, inter-State, and local requirements.

The CWA requires the EPA to set national effluent limitations and water-quality standards, and establishes a regulatory program for enforcement. Specifically, Section 402(a) of the Act establishes water-quality standards for contaminants in surface waters. The CWA imposes limitations on wastewater and storm water pollutant discharges through the National Pollutant Discharge Elimination System (NPDES) permitting program. The Act requires an NPDES permit before discharging any point source pollutant into U.S. waters. The NPDES General Permit for Industrial Storm Water is required for point source discharge of storm water runoff from industrial or commercial facilities to State waters. The EPA can delegate primary NPDES enforcement authority to States under the State Pollutant Discharge Elimination System (SPDES). Section 401(a)(1) of the CWA requires States to certify that the permitted discharge would comply with all limitations necessary to meet established State water-quality standards, treatment standards, or schedule of compliance.

The U.S. Army Corps of Engineers (USACE) is the lead agency for enforcement of CWA wetland requirements (33 CFR Part 320). Under Section 401 of the CWA, the EPA or a delegated State agency has the authority to review and approve, condition, or deny all permits or licenses that might result in a discharge to waters of the State, including wetlands.

A Section 404 permit would need to be obtained from the USACE before implementing any action, such as earthmoving activities and certain erosion controls that could disturb wetlands. Federal and State permits/certification are obtained using the same form, and permit applications for activities affecting waterways and wetlands are reviewed by the USACE in

consultation with the USFWS, the Soil Conservation Service, the EPA, and the delegated State agency.

Coastal Zone Management Act of 1972, as amended (16 USC 1451 et seq.) – Congress enacted the *Coastal Zone Management Act* (CZMA) in 1972 to address the increasing pressures of over-development upon the nation's coastal resources. The National Oceanic and Atmospheric Administration (NOAA) administers the Act. The CZMA encourages States to preserve, protect, develop, and, where possible, restore or enhance valuable natural coastal resources such as wetlands, floodplains, estuaries, beaches, dunes, barrier islands, and coral reefs, as well as the fish and wildlife using those habitats. Participation by States is voluntary. To encourage States to participate, the CZMA makes Federal financial assistance available to any coastal State or territory, including those on the Great Lakes that are willing to develop and implement a comprehensive coastal management program.

Comprehensive Environmental Response, Compensation, and Liability Act as amended by the Superfund Amendments and Reauthorization Act (42 USC 9601 et seq.) – The *Comprehensive Environmental Response, Compensation and Liability Act* (CERCLA) includes an emergency response program to respond to a release of a hazardous substance to the environment. Releases of source, byproduct, or special nuclear material from a nuclear incident are excluded from CERCLA requirements if the releases are subject to the financial protection requirements of the AEA. CERCLA is intended to provide a response to, and cleanup of, environmental problems that are not covered adequately by the permit programs of the many other environmental laws, including the CAA, CWA, *Safe Drinking Water Act*, *Marine Protection, Research, and Sanctuaries Act*, *Resource Conservation and Recovery Act*, and AEA. Under Section 120 of CERCLA, each department, agency, and instrumentality of the United States is subject to, and must comply with, CERCLA in the same manner as any nongovernmental entity (except for requirements for bonding, insurance, financial responsibility, or applicable time period). Under CERCLA, the EPA would have the authority to regulate hazardous substances at a facility in the event of a release or a "substantial threat of a release" of those materials. Releases greater than reportable quantities would be reported to the National Response Center. Assessment of alternatives for environmental compliance included consideration of whether hazardous substances in reportable quantity amounts could be present at power plants during the license renewal term.

Emergency Planning and Community Right-to-Know Act of 1986 (42 USC 11001 et seq.) (also known as "SARA Title III") – The *Emergency Planning and Community Right-to-Know Act of 1986* (EPCRA), which is the major amendment to CERCLA (42 USC §9601*)*, establishes the requirements for Federal, State, and local governments, Indian Tribes, and industry regarding emergency planning and "Community Right-to-Know" reporting on hazardous and toxic chemicals. The "Community Right-to-Know" provisions increase the public's knowledge and access to information on chemicals at individual facilities, their uses, and releases into the

environment. States and communities working with facilities can use the information to improve chemical safety and protect public health and the environment. This Act requires emergency planning and notice to communities and government agencies concerning the presence and release of specific chemicals. The EPA implements this Act under regulations found in 40 CFR Parts 355, 370, and 372.

Endangered Species Act of 1973 (16 USC 1531–1544) – The *Endangered Species Act* (ESA) was enacted to prevent the further decline of endangered and threatened species and to restore those species and their critical habitats. Section 7 of the Act requires consultation with the USFWS of the U.S. Department of the Interior or the National Marine Fisheries Service (NMFS) of the U.S. Department of Commerce to determine whether endangered and threatened species or their critical habitats are known to be in the vicinity of the proposed action, and to determine whether the proposed Federal action may affect listed species or critical habitat.

Environmental Standards for Uranium Fuel Cycle (40 CFR Part 190, Subpart B) – These regulations establish maximum doses to the body or organs of members of the public, as a result of operational normal releases from uranium fuel cycle activities, including uranium enrichment. These regulations were promulgated by the EPA under the authority of the AEA, as amended, and have been incorporated by reference in the NRC regulations in 10 CFR §20.1301(e).

Federal Insecticide, Fungicide, and Rodenticide Act, as amended (7 USC 135 et seq.) – The *Federal Insecticide, Fungicide, and Rodenticide Act* as amended by the Federal Environmental Pesticide Control Act and subsequent amendments, requires the registration of all new pesticides with the EPA before they are used in the United States. Manufacturers are required to develop toxicity data for their pesticide products. Toxicity data may be used to determine permissible discharge concentrations for an NPDES permit.

Fish and Wildlife Conservation Act of 1980 (16 USC 2901 et seq.) – The *Fish and Wildlife Conservation Act* provides Federal technical and financial assistance to States for the development of conservation plans and programs for nongame fish and wildlife. The Act also encourages Federal agencies to conserve and promote the conservation of nongame fish and wildlife and their habitats. Conservation plans are required to identify appropriate nongame fish and wildlife species and significant problems that may adversely affect these species and their habitats. The conservation plan must also determine the actions that should be taken to conserve the nongame fish and wildlife species. The designated State agencies are expected to consult with the appropriate Federal agencies during the development, revision, and implementation of the plan.

Fish and Wildlife Coordination Act of 1934, as amended (16 USC 661–666e) – The *Fish and Wildlife Coordination Act* requires Federal agencies to consult with the USFWS and the head of the State agency that administers wildlife resources in the affected State for an activity involving the impoundment, diversion, deepening, control, or modification of a stream or body of water. The agency would then produce a *Fish and Wildlife Coordination Act Report*.

Hazardous Materials Transportation Act of 1975, as amended (49 USC 1801 et seq.) – The *Hazardous Materials Transportation Act* regulates transportation of hazardous material (including radioactive material) in and between States. According to the Act, States may regulate the transport of hazardous material as long as their regulation is consistent with the Act or the U.S. Department of Transportation regulations provided in 49 CFR Parts 171 through 177. Other regulations regarding packaging for transportation of radionuclides are contained in 49 CFR Part 173, Subpart I.

Low-Level Radioactive Waste Policy Act of 1980, as amended (42 USC §2021 et seq.) – The *Low-Level Radioactive Waste Policy Act* amended the AEA to improve the procedures for the implementation of compacts providing for the establishment and operation of regional low-level radioactive waste disposal facilities. It also allows for Congress to grant consent for certain inter-State compacts. The amended act sets forth the responsibilities for disposal of low-level waste by States or inter-State compacts. The act states the amount of waste that certain low-level waste recipients can receive over a set time period. The amount of low-level radioactive waste generated from both pressurized and boiling water reactor types is allocated over a transition period until a local waste facility is operational.

Marine Mammal Protection Act of 1972 (16 USC §1361 et seq.) – The *Marine Mammal Protection Act* (MMPA) was enacted to protect and manage marine mammals and their products (e.g., the use of hides and meat). The primary authority for implementing the Act belongs to the USFWS and NMFS. The USFWS manages walruses, polar bears, sea otters, dugongs, marine otters, and West Indian, Amazonian, and West African manatees. The NMFS manages whales, porpoises, seals, and sea lions. The two agencies may issue permits under MMPA Section 104 (16 USC 1374) to persons, including Federal agencies, that authorize the taking or importing of specific species of marine mammals.

After the Secretary of the Interior or the Secretary of Commerce approves a State's program, the State can take over responsibility for managing one or more marine mammals. The MMPA also established a Marine Mammal Commission whose duties include reviewing laws and international conventions relating to marine mammals, studying the condition of these mammals, and recommending steps to Federal officials (e.g., listing a species as endangered) that should be taken to protect marine mammals. Federal agencies are directed by MMPA Section 205 (16 USC 1405) to cooperate with the commission by permitting it to use their facilities or services.

Migratory Bird Treaty Act of 1918, as amended (16 USC 703 et seq.) – The *Migratory Bird Treaty Act* is intended to protect birds that have common migration patterns between the United States and Canada, Mexico, Japan, and Russia. The Act stipulates that, except as permitted by regulations, it is unlawful at any time, by any means, or in any manner to pursue, hunt, take, capture, or kill any migratory bird.

National Environmental Policy Act of 1969, as amended (42 USC 4321 et seq.) – The *National Environmental Policy Act* (NEPA) requires Federal agencies to integrate environmental values into their decision-making process by considering the environmental impacts of proposed Federal actions and reasonable alternatives to those actions. NEPA establishes policy, sets goals (in Section 101), and provides means (in Section 102) for carrying out the Policy. Section 102(2) contains action-forcing provisions to ensure that Federal agencies follow the letter and spirit of the Act. For major Federal actions significantly affecting the quality of the human environment, Section 102(2)(C) of NEPA requires Federal agencies to prepare a detailed statement that includes the environmental impacts of the proposed action and other specified information. This generic environmental impact statement (GEIS) has been prepared in accordance with NEPA requirements and NRC regulations (10 CFR Part 51) for implementing NEPA to ensure compliance with Section 102(2).

National Historic Preservation Act of 1966, as amended (16 USC 470aa et seq.) – The *National Historic Preservation Act* (NHPA) was enacted to create a national historic preservation program, including the *National Register of Historic Places* and the Advisory Council on Historic Preservation. Section 106 of the Act requires Federal agencies to take into account the effects of their undertakings on historic properties. The Advisory Council on Historic Preservation regulations implementing Section 106 of the Act are found in 36 CFR Part 800. These regulations were revised on July 6, 2004 (69 FR 40544) and became effective on August 5, 2004. The regulations call for public involvement in the Section 106 consultation process, including Indian tribes and other interested members of the public, as applicable.

Native American Graves Protection and Repatriation Act of 1990 (25 USC 3001) – The *Native American Graves Protection and Repatriation Act* establishes provisions for the treatment of inadvertent discoveries of American Indian remains and cultural objects. When discoveries are made during ground-disturbing activities, activity in the area must immediately stop, and reasonable protective efforts, proper notifications, and appropriate disposition of the discovered items must be pursued.

Noise Control Act of 1972 (42 USC 4901 et seq.) – The *Noise Control Act* delegates the responsibility of noise control to State and local governments. Commercial facilities are required to comply with Federal, State, inter-State, and local requirements regarding noise control. Section 4 of the Noise Control Act directs Federal agencies to carry out programs in

their jurisdictions “to the fullest extent within their authority” and in a manner that furthers a national policy of promoting an environment free from noise that jeopardizes health and welfare.

Nuclear Regulatory Commission License Termination Rule (10 CFR Part 20, Subpart E) – The AEA assigns NRC the responsibility for licensing and regulating commercial uses of atomic energy. When a licensed facility has completed its mission, the facility must meet standards for cleanup in order to terminate its license. The License Termination Rule establishes that NRC will consider a site acceptable for unrestricted use if the residual radioactivity that is distinguishable from background radiation results in a total effective dose equivalent (TEDE) to an average member of the critical group that does not exceed 25 millirem per year, including that from groundwater sources of drinking water, and the residual radioactivity has been reduced to levels that are as low as reasonably achievable (ALARA). The critical group is the group of individuals reasonably expected to receive the greatest exposure to residual radioactivity for any applicable set of circumstances.

The License Termination Rule also provides for land use restrictions or other types of institutional controls to allow terminating NRC licenses and releasing sites under restricted conditions if decommissioning criteria for unrestricted use cannot be met. Plus, the License Termination Rule establishes alternate criteria for license termination if the licensee provides assurance that public health and safety would continue to be protected, and that it is unlikely that the dose from all manmade sources combined, other than medical, would be more than 100 millirem per year.

Nuclear Waste Policy Act of 1982 (42 USC 10101, et seq.) – The *Nuclear Waste Policy Act* provides for the research and development of repositories for the disposal of high-level radioactive waste, spent nuclear fuel, and low-level radioactive waste. The act consists of three titles and several subtitles. Title I includes the provisions for the disposal and storage of high-level radioactive waste and spent nuclear fuel. Subtitle A of Title I delineates the requirements for site characterization and construction of the repository and the participation of States and other local governments in the selection process. Subtitles B, C, and D of Title I deal with the specific issues for interim storage, monitored retrievable storage, and low-level radioactive waste.

Occupational Safety and Health Act of 1970 (29 USC 651 et seq.) – The *Occupational Safety and Health Act* establishes standards to enhance safe and healthy working conditions in places of employment throughout the United States. The Act is administered and enforced by the Occupational Safety and Health Administration (OSHA), a U.S. Department of Labor agency. Employers who fail to comply with OSHA standards can be penalized by the Federal government. The Act allows States to develop and enforce OSHA standards if such programs have been approved by the Secretary of Labor.

Pollution Prevention Act of 1990 (42 USC 13101 et seq.) – The *Pollution Prevention Act* establishes a national policy for waste management and pollution control that focuses first on source reduction, then on environmental, safe recycling, treatment, and disposal.

Resource Conservation and Recovery Act as amended by the Hazardous and Solid Waste Amendments (42 USC 6901 et seq.) – The *Resource Conservation and Recovery Act* (RCRA) requires the EPA to define and identify hazardous waste; establish standards for its transportation, treatment, storage, and disposal; and require permits for persons engaged in hazardous waste activities. Section 3006 (42 USC §6926) allows States to establish and administer these permit programs with EPA approval. EPA regulations implementing the RCRA are found in 40 CFR Parts 260 through 283. Regulations imposed on a generator or on a treatment, storage, and/or disposal facility vary according to the type and quantity of material or waste generated, treated, stored, and/or disposed. The method of treatment, storage, and/or disposal also impacts the extent and complexity of the requirements.

Safe Drinking Water Act of 1974 (42 USC 300(f) et seq.) – The *Safe Drinking Water Act* (SDWA) was enacted to protect the quality of public water supplies and sources of drinking water and establishes minimum national standards for public water supply systems in the form of maximum contaminant levels (MCLs) for pollutants, including radionuclides. Other programs established by the SDWA include the Sole Source Aquifer Program, the Wellhead Protection Program, and the Underground Injection Control Program. In addition, the Act provides underground sources of drinking water with protection from contaminated releases and spills.

Sole Source Aquifer – If a nuclear power plant is located within an area designated as a sole source aquifer pursuant to Section 1424(e) of the SDWA, the Supplemental EIS would be subject to EPA review. If the EPA review raises concerns that plant operations are not protective of groundwater quality, specific mitigation recommendations or additional pollution prevention requirements may be required.

Toxic Substances Control Act (15 USC 2601 et seq.) – The *Toxic Substances Control Act* (TSCA) regulates the manufacture, processing, distribution, and use of certain chemicals not regulated by RCRA or other statutes including asbestos-containing material and polychlorinated biphenyls. Any TSCA-regulated waste removed from structures (e.g., polychlorinated biphenyls-contaminated capacitors or asbestos) or discovered during the implementation phase (e.g., contaminated media), would be managed in compliance with TSCA requirements in 40 CFR Part 761. The evaluation for all alternatives considers compliance with TSCA.

F.4 Applicable Executive Orders

Executive Orders establish policies and requirements for Federal agencies. Executive Orders are applicable to Executive branch agencies but do not have the force of law or regulation.

Executive Order 11514, Protection and Enhancement of Environmental Quality – This Order (regulated by 40 CFR Parts 1500 through 1508) requires Federal agencies to continually monitor and control their activities to: (1) protect and enhance the quality of the environment, and (2) develop procedures to ensure the fullest practicable provision of timely public information and understanding of the Federal plans and programs that may have potential environmental impact so that views of interested parties can be obtained.

Executive Order 11593, Protection and Enhancement of the Cultural Environment – This Order directs Federal agencies to locate, inventory, and nominate qualified properties under their jurisdiction or control to the *National Register of Historic Places*.

Executive Order 11988, Floodplain Management – This Order requires Federal agencies to avoid direct or indirect support of floodplain development whenever there is a practicable alternative. A Federal agency is required to evaluate the potential effects of any actions it may take in a floodplain. Federal agencies are also required to encourage and provide appropriate guidance to applicants to evaluate the effects of their proposals on floodplains prior to submitting applications for Federal licenses, permits, loans, or grants.

Executive Order 11990, Protection of Wetlands – This Order requires Federal agencies to avoid any short or long-term adverse impacts on wetlands wherever there is a practicable alternative, and to provide opportunity for early public review of any plans or proposals for new construction in wetlands. Federal agencies are required to evaluate the potential effects of any actions they may take on wetlands when carrying out their responsibilities (e.g., planning, regulating, and licensing activities). However, this executive order does not apply to the issuance by Federal agencies of permits, licenses, or allocations to private parties for activities involving wetlands on non-Federal property.

Executive Order 12088, Federal Compliance with Pollution Control Standards, October 13, 1978, as amended by Executive Order 12580, Superfund Implementation – This Order directs Federal agencies to comply with applicable administrative and procedural pollution controls standards established by, but not limited to, the CAA, the *Noise Control Act*, the CWA, the SDWA, the TSCA, and the RCRA.

Executive Order 12148 (Federal Emergency Management, July 20, 1979) – This Order transfers functions and responsibilities associated with Federal emergency management to the

Director of the Federal Emergency Management Agency. The Order assigns the Director the responsibility to establish Federal policies for, and to coordinate all civil defense and civil emergency planning, management, mitigation, and assistance functions of, Executive agencies.

Executive Order 12580, Superfund Implementation, as amended by Executive Order 13308 (June 20, 2003) – This Order delegates to the heads of Executive Departments and agencies the responsibility of undertaking remedial actions for releases or threatened releases that are not on the National Priorities List, and removal actions, other than emergencies, where the release is from any facility under the jurisdiction or control of Executive Departments and agencies.

Executive Order 12656 (Assignment of Emergency Preparedness Responsibilities, November 18, 1988) – This Order assigns emergency preparedness responsibilities to Federal departments and agencies.

Executive Order 12856, Right to Know Laws and Pollution Prevention Requirements – Executive Order 12856 directs Federal agencies to reduce and report toxic chemicals entering any waste stream; improve emergency planning, response, and accident notification; and to meet the requirements of EPCRA.

Executive Order 12898, Federal Actions to Address Environmental Justice in Minority Populations and Low-Income Populations – This calls for Federal agencies to address environmental justice in minority populations and low-income populations (59 FR 7629), and directs Federal agencies to identify and address, as appropriate, disproportionately high and adverse health or environmental effects of their programs, policies, and activities on minority populations and low-income populations. In response to this Executive Order, the NRC has issued a final policy statement on the "Treatment of Environmental Justice Matters in NRC Regulatory and Licensing Actions" (69 FR 52040; August 24, 2004) and environmental justice procedures to be followed in NEPA documents prepared by the NRC's Office of Nuclear Reactor Regulation.

Executive Order 12902, Energy Efficiency and Water Conservation at Federal Facilities – This Order requires Federal agencies to develop and implement a program for conservation of energy and water resources. As part of this program, agencies are required to conduct comprehensive facility audits of their energy and water use.

Executive Order 13007, Indian Sacred Sites – This Order directs Federal agencies, to the extent permitted by law and not inconsistent with agency missions, to avoid adverse effects to sacred sites and to provide access to those sites to Native Americans for religious practices. The Order directs agencies to plan projects to provide protection of and access to sacred sites to the extent compatible with the project.

Executive Order 13045, Protection of Children from Environmental Health Risks and Safety Risks, as amended by Executive Order 13229 (October 9, 2001) and amended by Executive Order 13296 (April 18, 2003) – This Order requires Federal Executive branch agencies to make it a high priority to identify and assess environmental health risks and safety risks that may disproportionately affect children and to ensure that its policies, programs, activities, and standards address disproportionate risks to children that result from environmental health or safety risks.

Executive Order 13101, Greening the Government through Waste Prevention, Recycling, and Federal Acquisition – This Order requires each Federal agency to incorporate waste prevention and recycling in its daily operations and work to increase and expand markets for recovered materials. This Order states that it is national policy to prefer pollution prevention whenever feasible. Pollution that cannot be prevented should be recycled; pollution that cannot be prevented or recycled should be treated in an environmentally safe manner. Disposal should be employed only as a last resort.

Executive Order 13112, Invasive Species – This Order directs Federal agencies to act to prevent the introduction of or to monitor and control invasive (non-native) species, to provide for restoration of native species, to conduct research, to promote educational activities, and to exercise care in taking actions that could promote the introduction or spread of invasive species. During the implementation phase, rehabilitation of disturbed areas would be accomplished by reseeding or revegetating areas with native plants and trees.

Executive Order 13123, Greening the Government through Efficient Energy Management (June 8, 1999) – This Order sets goals for agencies for reducing greenhouse gas emissions from facility energy use, reducing energy consumption per gross square foot of facilities, reducing energy consumption per gross square foot or unit of production, expanding use of renewable energy, reducing the use of petroleum within facilities, reducing source energy use, and reducing water consumption and associated energy use.

Executive Order 13148, Greening the Government through Leadership in Environmental Management – This Order requires agencies to develop strategies and goals for environmental compliance, right-to-know, and pollution prevention. It requires all Federal facilities to have an environmental management system, requires compliance or environmental management system audits, and requires that Federal Executive Branch agencies comply with the requirements for toxic chemical release reporting in Section 313 of EPCRA.

Executive Order 13175, Consultation and Coordination with Indian Tribal Governments – This Order directs Federal agencies to establish regular and meaningful consultation and collaboration with Tribal governments in the development of Federal policies that have Tribal

implications, to strengthen U.S. government-to-government relationships with American Indian tribes, and to reduce the imposition of unfunded mandates on Tribal governments.

F.5 Applicable U.S. Nuclear Regulatory Commission Regulations

The AEA, as amended, allows the NRC to issue licenses for commercial power reactors to operate up to 40 years. This license is based on adherence of the licensee to regulations outlined in CFR, Title 10. The NRC regulations allow for the renewal of the licenses for up to an additional 20 years beyond the initial licensing period. The renewal of the license depends on the outcome of safety and environmental assessments of the commercial power reactor. There are no specific limitations in the AEA or NRC regulations restricting the number of times a license may be renewed. The license renewal process includes a set of requirements, which are designed to assure the safe operation and protection of the environment.

The license renewal process includes two reviews: an environmental review and a safety review. The reviews are based on the regulations published in the *Code of Federal Regulations* (10 CFR Parts 51 for the environmental review and 54 for the safety review). These regulations describe the NRC's expectation for the format and content of license renewal applications as well as the methods used by NRC staff in evaluating these applications.

The license renewal environmental review consists of the following regulations and guidance:

- *Code of Federal Regulations* – The scope of the environmental review is based on the regulations provided in 10 CFR Part 51, "Environmental Protection Regulations for Domestic Licensing and Related Regulatory Functions."

- *Preparation of Environmental Reports for License Renewal Applications* (Supplement 1 to Regulatory Guide 4.2, Revision 1) – This document outlines the format and content to be used by the applicant to discuss the environmental aspects of its license renewal application. It defines the information the applicant must include in the application, which the NRC staff then reviews.

- *Standard Review Plan for Environmental Reviews for Nuclear Power Plants – Supplement 1: Operating License Renewal* (NUREG-1555, Supplement 1, Revision 1) – This is the outline for the NRC's review of the environmental issues. After considering ways to evaluate the environmental consequences of license renewal, the NRC chose to develop the *Generic Environmental Impact Statement for License Renewal of Nuclear Plants*, NUREG-1437 (GEIS), which covered impacts that were common to all or most nuclear power facilities. The GEIS that was published in 1996 allows the applicant and

NRC to focus on those important environmental issues specific to each site being re-licensed. The review results in a site-specific supplement to the GEIS.

F.6 Applicable State Laws, Regulations and Agreements

The AEA authorizes States to establish programs to assume NRC regulatory authority for certain activities. For example, the New York State Department of Labor (NYSDOL) and Department of Environmental Conservation NYSDEC have established requirements under this Agreement State Program. NYSDOL has jurisdiction in New York over commercial and industrial uses of radioactive material. Under the New York Agreement State Program, NYSDEC has jurisdiction over discharges of radioactive material to the environment, including releases to the air and water, and the disposal of radioactive wastes in the ground. In addition to implementing some Federal programs, State legislatures develop their own laws. State statutes supplement as well as implement Federal laws for protection of air, water quality, and groundwater. State legislation may address solid waste management programs, locally rare or endangered species, and historic and cultural resources.

In addition, the CWA allows for primary enforcement and administration through State agencies, provided the State program (1) is at least as stringent as the Federal program, (2) conforms to the CWA, and (3) delegates authority for the Federal NPDES program from the EPA to the State. The primary mechanism to control water pollution is the requirement that direct dischargers to obtain an NPDES permit or, in the case of States where the authority has been delegated from the EPA, an SPDES permit, pursuant to the CWA.

One important difference between Federal regulations and certain State regulations is the definition of waters regulated by the State. Certain State regulations may include underground waters, while the CWA only regulates surface waters. For example, an SPDES permit is required under New York State law for all discharges to both surface waters and groundwater.

F.6.1 State Environmental Requirements

Certain environmental requirements, including some discussed earlier, may have been delegated to State authorities for implementation, enforcement, or oversight. Table F.6-1 provides a list of representative State environmental requirements that may affect license renewal applications for nuclear power plants.

Table F.6–1. State Environmental Requirements

Law/Regulation	Requirements
Air Quality Protection	
Title V Permit Rules	Establishes the policies and procedures by which a State will administer the Title V permit program under the CAA. Requires Title V sources to apply for and obtain a Title V permit prior to operation of the source facility.
Permits to Install New Sources of Pollution	Requires a permit prior to the installation of a new source of air pollutants, or the modification of an air contaminant source. Discusses exemptions and conditions under which approval will be granted. Also requires an impact analysis to determine if the air contaminant source will cause or contribute to violations of the NAAQS.
Air Permits to Operate and Variances	Requires a permit prior to the operation or use of any air contaminant source in violation of any applicable air pollution control law, unless a variance has been applied for and obtained from the State agency.
Accidental Release Prevention Program	Requires the owner or operator of a stationary source that has more than a threshold quantity of a regulated substance to comply with all the provisions of the rule, including creating a hazard assessment, risk management plan, a prevention program, and an emergency response program.
General Conformity Rules	Rules on “general conformity” are mandated by the CAA to ensure that Federal actions do not contribute to air quality violations within the State. Discusses which Federal actions are subject to the conformity requirements, the procedures for conformity analysis, public participation/consultation, and the final conformity determination.
Water Resources Protection	
National Pollutant Discharge Elimination System Permits	Initiates plans and programs for the prevention, control, and abatement of new or existing pollution of State waters. Requires an individual or general permit prior to any discharge of sewage, industrial waste, or other waste as defined by State code. Requires that each point source comply with authorized discharge levels, monitoring requirements, and other appropriate requirements.
Permits to Install New Sources of Pollution	Requires a permit prior to the installation of a new source of water pollutants, or the modification of any pollutant discharge source.
Water Quality Standards	Establishes water quality standards for surface waters in the State, including beneficial use designations, numeric water quality criteria, and the anti-degradation water body classification system.
Section 401 Water Quality Certifications	Requires a Section 401 water quality certification and payment of applicable fees before the issuance of any Federal permit or license to conduct any activity that may result in any discharge to waters of the State.
Public Water Systems Licenses to Operate	Requires a public water systems license prior to operating or maintaining a public water system.

Table F.6–1. (cont.)

Law/Regulation	Requirements
Design, Construction, Installation, and Upgrading for Underground Storage Tank systems	Establishes performance standards and upgrading requirements for underground storage tanks containing petroleum (e.g., diesel fuel) or other regulated substances. Requires an installation or upgrading permit for each location where such installation or upgrading is to occur prior to beginning either an installation or upgrading of a tank or piping comprising an underground storage tank system.
Registration of Underground Storage Tank System	Establishes annual registration requirements for underground storage tanks containing petroleum or other regulated substances.
Flammable and Combustible Liquids	Requires a permit to install, remove, repair, or alter a stationary tank for the storage of flammable or combustible liquids or modify or replace any line or dispensing device.
Waste Management and Pollution Prevention	
Generator Standards	Requires any person who generates a waste to determine if that waste is hazardous. Requires a generator identification number from EPA or State agency prior to treatment, storage, disposal, transport, or offer for transport of hazardous waste.
Licensing Requirements for Solid Waste, Construction, and Demolition Debris Facilities	Requires an annual license for any municipal solid waste landfill, industrial solid waste landfill, residual solid waste landfill, compost facility, transfer facility, infectious waste treatment facility, or solid waste incineration facility prior to operation. New facilities must obtain a permit to install prior to construction. Also, requires a license to establish, modify, operate, or maintain a construction and demolition debris facility.
Radiation Generator and Broker Reporting Requirements	Requires completion of a low-level radioactive waste generator report within 60 days of beginning to generate low-level waste. Additionally, requires each generator to submit an annual report on the state of low-level waste activities in their facility and pay applicable fees.
Hazardous Waste Management System, Permits	Requires operation permits for any new or existing hazardous waste facility.
Emergency Planning and Response	
Hazardous Chemical Reporting	Requires the submission of Material Safety Data Sheets and an annual Emergency and Hazardous Chemical Inventory to local emergency response officials for any hazardous chemicals that are produced, used, or stored at the facility in an amount that equals or exceeds the threshold quantity.

Table F.6–1. (cont.)

Law/Regulation	Requirements
Emergency Planning Requirements of Subject Facilities	Requires any facility having an extremely hazardous substance present in an amount equal to or exceeding the threshold planning quantity to notify the emergency response commission and the local emergency planning committee within 60 days after onsite storage begins. Also, requires the designation of a facility representative who will participate in the local emergency planning process as a facility emergency coordinator.
Toxic Chemical Release Reporting	Establishes reporting requirements and schedule for each toxic chemical known to be manufactured (including imported), processed, or otherwise used in excess of an applicable threshold quantity. Applies only to facilities of a certain classification.
Biotic Resources Protection	
State Endangered Plant Species Protection	Establishes criteria for identifying threatened or endangered species of native plants and prohibits injuring or removing endangered species without permission.
State Endangered Fish and Wildlife Species Protection	Establishes and requires periodic update to a State list of endangered fish and wildlife species.
Permits for Impacts to Isolated Wetlands	Requires a general or individual isolated wetland permit prior to engaging in an activity that involves the filling of an isolated wetland.
Cultural Resources Protection	
State Registry of Archaeological Landmarks	Establishes a State registry of archaeological landmarks. Prohibits any person from excavating or destroying such land, or from removing skeletal remains or artifacts from any land placed on the registry without first notifying the State Historic Preservation Office.
Survey and Salvage; Discoveries; Preservation	Directs State departments, agencies, and political subdivisions to cooperate in the preservation of archaeological and historic sites and the recovery of scientific information from such sites. Also, requires State agencies and contractors performing work on public improvements to cooperate with archaeological and historic survey and salvage efforts and to notify the State historic preservation office about archaeological discoveries.

F.6.2 Operating Permits and Other Requirements

Several operating permit applications may be prepared and submitted, and regulator approval and/or permits would be received prior to license renewal approval by the NRC. Table F.6-2 lists representative Federal, State, and local permits.

F.6.3 Cooperating Agencies

During the scoping process, no Federal, State, or local agencies were identified as potential cooperating agencies in the preparation of this GEIS.

Table F.6–2. Federal, State, and Local Permits and Other Requirements

License, Permit, or Other Required Approval	Responsible Agency	Authority	Relevance and Status
Air Quality Protection			
Title V Operating Permit: Required for sources that are not exempt and are major sources, affected sources subject to the Acid Rain Program, sources subject to new source performance standards, or sources subject to National Emission Standards for Hazardous Air Pollutants.	EPA or State agency	CAA, Title V, Sections 501–507 (USC, Title 42, Sections 7661-7661f [42 USC 7661-7661f])	Nuclear Power plants are subject to 40 CFR Part 61, Subpart H (40 CFR Part 61, Subpart H), "National Emissions Standards for Emissions of Radionuclides," which is included in the terms and conditions of the Title V Operating Permit.
Risk Management Plan: Required for any stationary source that has a regulated substance (e.g., chlorine, hydrogen fluoride, nitric acid) in any process (including storage) in a quantity that is over the threshold level.	EPA or State agency	CAA, Title 1, Section 112(R)(7) (42 USC 7412)	These regulated substances stored in quantities that exceed the threshold levels would require a Risk Management Plan.
CAA Conformity Determination: Required for each criteria pollutant (i.e., sulfur dioxide, particulate matter, carbon monoxide, ozone, nitrogen dioxide, and lead) where the total of direct and indirect emissions in a nonattainment or maintenance area caused by a Federal action would equal or exceed threshold rates.	EPA or State agency	CAA, Title 1, Section 176(c) (42 USC 7506)	CAA conformity determination would be required at nuclear power plants located in nonattainment areas with NAAQS for criteria pollutants or maintenance areas for any criteria pollutant that would be emitted as a result of license renewal.
Water Resources Protection			
NPDES Permit: Construction Site Storm Water: Required before making point source discharges of storm water from a construction project that disturbs more than 2 hectares (5 acres) of land.	EPA or State agency	CWA (33 USC 1251 et seq.); 40 CFR Part 122	Any plant refurbishment involving construction of more than 2 hectares (5 acres) of land would require a Storm Water Pollution Prevention Plan and construction site storm water discharge permit.
NPDES Permit: Industrial Facility Storm Water: Required before making point source discharges of storm water from an industrial site.	EPA or State agency	CWA (33 USC 1251 et seq.); 40 CFR Part 122	Storm water would be discharged from the nuclear power plants during operations. Storm water would discharge through existing outfalls covered by a permit.

Table F.6–2. (cont.)

License, Permit, or Other Required Approval	Responsible Agency	Authority	Relevance and Status
NPDES Permit: Process Water Discharge: Required before making point source discharges of industrial process wastewater.	EPA or State agency	CWA (33 USC 1251 et seq.); 40 CFR Part 122	Process industrial wastewater would be discharged through existing outfalls covered by the permit.
Spill Prevention Control and Countermeasures Plan: Required for any facility that could discharge diesel fuel in harmful quantities into navigable waters or onto adjoining shorelines.	EPA or State agency	CWA (33 USC 1251 et seq.); 40 CFR Part 112	A Spill Prevention Control and Countermeasures Plan is required at nuclear power plants storing large volumes of diesel fuel and/or other petroleum products.
CWA Section 401 Water Quality Certification: Required to be submitted to the agency responsible for issuing any Federal license or permit to conduct an activity that may result in a discharge of pollutants into waters of a State.	EPA or State agency	CWA, Section 401 (33 USC 1341); ORC Chapters 119 and 6111	Certification for operation of a nuclear power plant may require a Federal license or permit (e.g., a CWA Section 404 Permit), a CWA Section 401 Water Quality Certification.
New Underground Storage Tanks System Registration: Required within 30 days of bringing a new underground storage tank system into service.	EPA or State agency	RCRA, as amended, Subtitle I (42 USC 6991a–6991i); 40 CFR §280.22	Required if new underground storage tank systems would be installed during refurbishment at a nuclear power plant.
Above Ground Storage Tank: A permit is required to install, remove, repair, or alter any stationary tank for the storage of flammable or combustible liquids.	State Fire Marshal		Required if new aboveground diesel fuel storage tanks would be installed during refurbishment at a nuclear power plant.
Waste Management and Pollution Prevention			
Registration and Hazardous Waste Generator Identification Number: Required before a person who generates over 100 kg (220 lb) per calendar month of hazardous waste ships the hazardous waste offsite.	EPA or State agency	RCRA, as amended (42 USC 6901 et seq.), Subtitle C	Generators of hazardous waste must notify the EPA that the wastes exist and require management in compliance with RCRA.

Table F.6–2. (cont.)

License, Permit, or Other Required Approval	Responsible Agency	Authority	Relevance and Status
Hazardous Waste Facility Permit: Required if hazardous waste will undergo nonexempt treatment by the generator, be stored onsite for longer than 90 days by the generator of 1,000 kg (2,205 lb) or more of hazardous waste per month, be stored onsite for longer than 180 days by the generator of between 100 and 1,000 kg (220 and 2,205 lb) of hazardous waste per month, disposed of onsite, or be received from offsite for treatment or disposal.	EPA or State agency	RCRA, as amended (42 USC 6901 et seq.), Subtitle C	Hazardous wastes are usually not disposed of onsite at nuclear power plants. Hazardous wastes generated onsite are not generally stored for more than 90 days. However, should a nuclear power plant store wastes onsite for greater then 90 days for characterization, profiling, or scheduling for treatment or disposal, a Hazardous Waste Facility Permit would be required.
Emergency Planning and Response			
List of Material Safety Data Sheets: Submission of a list of material Safety Data Sheets is required for hazardous chemicals (as defined in 29 CFR Part 1910) that are stored onsite in excess of their threshold quantities.	State and local emergency planning agencies	EPCRA, Section 311 (42 USC 11021); 40 CFR §370.20	Nuclear power plant operators are required to submit a List of Material Safety Data Sheets to State and local emergency planning agencies.
Annual Hazardous Chemical Inventory Report: The report must be submitted when hazardous chemicals have been stored at a facility during the preceding year in amounts that exceed threshold quantities.	State and local emergency response agencies; local fire department	EPCRA, Section 312 (42 USC 11022); 40 CFR §370.25	If hazardous chemicals have been stored at a nuclear power plant during the preceding year in amounts that exceed threshold quantities plant operators would be required to submit an Annual Hazardous Chemical Inventory Report.
Notification of Onsite Storage of an Extremely Hazardous Substance: Submission of the notification is required within 60 days after onsite storage begins of an extremely hazardous substance in a quantity greater than the threshold planning quantity.	State and local emergency response agencies	EPCRA, Section 304 (42 USC 11004); 40 CFR §355.30	If an extremely hazardous substance will stored at a nuclear power plant in a quantity greater than the threshold planning quantity, plant operators would prepare and submit the Notification of Onsite Storage of an Extremely Hazardous Substance.

Table F.6–2. (cont.)

License, Permit, or Other Required Approval	Responsible Agency	Authority	Relevance and Status
Annual Toxics Release Inventory Report: Required for facilities that have 10 or more full-time employees and are assigned certain Standard Industrial Classification codes.	EPA or State agency	EPCRA, Section 313 (42 USC 11023); 40 CFR Part 372	If required, nuclear power plant operators would prepare and submit a Toxics Release Inventory Report to the EPA.
Transportation of Radioactive Wastes and Conversion Products Packaging, Labeling, and Routing Requirements for Radioactive Materials: Required for packages containing radioactive materials that will be shipped by truck or rail.	U.S. Department of Transportation	Hazardous Materials Transportation Act (49 USC 1501 et seq.); AEA, as amended (42 USC 2011 et seq.); 49 CFR Parts 172, 173, 174, 177, and 397	When shipments of radioactive materials are made, nuclear power plant operators would comply with U.S. Department of Transportation packaging, labeling, and routing requirements.
Biotic Resource Protection			
Threatened and Endangered Species Consultation: Required between the responsible Federal agencies and affected States to ensure that the project is not likely to: (1) jeopardize the continued existence of any species listed at the Federal or State level as endangered or threatened; or (2) result in destruction of critical habitat of such species.	USFWS and State agencies	ESA of 1973, as amended (16 USC 1531 et seq.)	The NRC would consult with the USFWS and State agencies regarding the impact of license renewal on threatened or endangered species or their critical habitat.
CWA Section 404 (Dredge and Fill) Permit: Required to place dredged or fill material into waters of the United States, including areas designated as wetlands, unless such placement is exempt or authorized by a nationwide permit or a regional permit; a notice must be filed if a nationwide or regional permit applies.	USACE	CWA (33 USC 1251 et seq.); 33 CFR Parts 323 and 330	Any dredging or placement of fill material into wetlands within the jurisdiction of the USACE at a nuclear power plant would require a Section 404 permit.

Table F.6–2. (cont.)

License, Permit, or Other Required Approval	Responsible Agency	Authority	Relevance and Status
Cultural Resources Protection			
Archaeological and Historical Resources Consultation: Required before a Federal agency approves a project in an area where archaeological or historic resources might be located.	State Historic Preservation Officer and/or Tribal Historic Preservation Officer	NHPA of 1966, as amended (16 USC 470 et seq.); *Archaeological and Historical Preservation Act* of 1974 (16 USC 469-469c-2); Antiquities Act of 1906 (16 USC 431 et seq.); *Archaeological Resources Protection Act* of 1979, as amended (16 USC 470aa–mm)	The NRC would consult with the State and/or Tribal Historic Preservation Officers and representative Indian Tribes regarding the impacts of license renewal and the results of archaeological and architectural surveys of nuclear power plant sites.

F.7 Emergency Management and Response Laws, Regulations, and Executive Orders

This section discusses the laws, regulations, and Executive Orders that address the protection of public health and worker safety and require the establishment of emergency plans. These laws, regulations, and Executive Orders relate to the operation of nuclear power plants.

F.7.1 Federal Emergency Management Response Laws

Emergency Planning and Community Right-to-Know Act of 1986 (USC 11001 et seq.) (also known as "SARA Title III") – This act requires emergency planning and notice to communities and government agencies concerning the presence and release of specific chemicals. The EPA implements this act under regulations found in 40 CFR Parts 355, 370, and 372. Under Subtitle A of this act, facilities are required to provide various information (such as inventories of specific chemicals used or stored and releases that occur from these sites) to the State emergency response commission and to the local emergency planning committee to ensure that emergency plans are sufficient to respond to unplanned releases of hazardous substances. Implementation of the provisions of this act began voluntarily in 1987, and inventory and annual emissions reporting began in 1988.

Comprehensive Environmental Response, Compensation, and Liability Act of 1980 (42 USC 9604(l) (also know as "Superfund") – This act provides authority for Federal and State governments to respond directly to hazardous substance incidents. The act requires reporting of spills, including radioactive spills, to the National Response Center.

Robert T. Stafford Disaster Relief and Emergency Assistance Act of 1988 (42 USC 5121) – This act, as amended, provides an orderly, continuing means of providing Federal Government assistance to State and local governments in managing their responsibilities to alleviate suffering and damage resulting from disasters. The President, in response to a State governor's request, may declare an "emergency" or "major disaster" to provide Federal assistance under this act. The President, in Executive Order 12148, delegated all functions except those in Sections 301, 401, and 409 to the Director of the Federal Emergency Management Agency. The act provides for the appointment of a Federal coordinating officer who will operate in the designated area with a State coordinating officer for the purpose of coordinating State and local disaster assistance efforts with those of the Federal Government.

Justice Assistance Act of 1984 (42 USC 3701–3799) – This act establishes Emergency Federal law enforcement assistance to State and local governments in responding to a law enforcement emergency. The act defines the term "law enforcement emergency" as an uncommon situation which requires law enforcement, which is or threatens to become of serious or epidemic proportions, and with respect to which State and local resources are inadequate to protect the lives and property of citizens or to enforce the criminal law. Emergencies that are not of an ongoing or chronic nature (for example, the Mount Saint Helens volcanic eruption) are eligible for Federal law enforcement assistance including funds, equipment, training, intelligence information, and personnel.

Price-Anderson Nuclear Industries Indemnity Act (42 USC 2210) – The *Price-Anderson Act* provides insurance protection to victims of a nuclear accident. The main purpose of the Act is to partially indemnify the nuclear industry against liability claims arising from nuclear incidents while still ensuring compensation coverage for the general public. The Act establishes a no-fault insurance-type system in which the first $10 billion is industry-funded as described in the Act (any claims above the $10 billion would be covered by the Federal Government).

The Act requires NRC licensees and U.S. Department of Energy contractors to enter into agreements of indemnification to cover personal injury and property damage to those harmed by a nuclear or radiological incident, including the costs of incident response or precautionary evacuation and the costs of investigating and defending claims and settling suits for such damages.

F.7.2 Federal Emergency Management and Response Regulations

Quantities of Radioactive Materials Requiring Consideration of the Need for an Emergency Plan for Responding to a Release (10 CFR 30.72, Schedule C) – This Section of the regulations provides a list that is the basis for both the public and private sector to determine whether the radiological materials they handle must have an emergency response plan for unscheduled releases. The "Federal Radiological Emergency Response Plan," dated November 1995, primarily discusses offsite Federal response in support of State and local governments with jurisdiction during a peacetime radiological emergency.

Occupational Safety and Health Administration Emergency Response, Hazardous Waste Operations, and Worker Right to Know (29 CFR Part 1910) – This regulation establishes OSHA requirements for employee safety in a variety of working environments. It addresses employee emergency and fire prevention plans (Section 1910.38), hazardous waste operations and emergency response (Section 1920.120), and hazards communication (Section 1910.1200) to make employees aware of the dangers they face from hazardous materials in their workplace. These regulations do not directly apply to Federal agencies. However, Section 19 of the Occupational Safety and Health Act (29 U.S.C. 668) requires all Federal agencies to have occupational safety programs "consistent" with Occupational Safety and Health Act standards.

Emergency Management and Assistance (44 CFR Section 1.1) – This regulation contains the policies and procedures for the Federal Emergency Management Act, National Flood Insurance Program, Federal Crime Insurance Program, Fire Prevention and Control Program, Disaster Assistance Program, and Preparedness Program, including radiological planning and preparedness.

Hazardous Materials Tables and Communications, Emergency Response Information Requirements (49 CFR Part 172) – This regulation defines the regulatory requirements for marking, labeling, placarding, and documenting hazardous material shipments. The regulation also specifies the requirements for providing hazardous material information and training.

F.7.3 Emergency Management and Response Executive Orders

Executive Order 12148 (Federal Emergency Management, July 20, 1979) – This Order transfers functions and responsibilities associated with Federal emergency management to the Director of the Federal Emergency Management Agency. The Order assigns the Director the responsibility to establish Federal policies for, and to coordinate all civil defense and civil emergency planning, management, mitigation, and assistance functions of, Executive agencies.

Executive Order 12656 (Assignment of Emergency Preparedness Responsibilities, November 18, 1988) – This Order assigns emergency preparedness responsibilities to Federal Departments and agencies.

Executive Order 12938 (Proliferation of Weapons of Mass Destruction, November 14, 1994) – This Order states that the proliferation of nuclear, biological, and chemical weapons ("weapons of mass destruction") and the means of delivering such weapons constitutes an unusual and extraordinary threat to the national security, foreign policy, and economy of the United States, and that a national emergency would be declared to deal with that threat.

F.8 Consultations with Agencies and Federally Recognized American Indian Nations

Certain laws, such as the ESA, the Fish and Wildlife Coordination Act, and the NHPA, require consultation and coordination by the NRC with other governmental entities including other Federal agencies, State and local agencies, and Federally recognized American Indian governments. These consultations must occur on a timely basis and are generally required before any land disturbance can begin. Most of these consultations are related to biotic resources, cultural resources, and American Indian rights. The biotic resource consultations generally pertain to the potential for activities to disturb sensitive species or habitats. Cultural resource consultations relate to the potential for disruption of important cultural resources and archaeological sites. American Indian consultations are concerned with the potential for disturbance of ancestral American Indian sites, the traditional practices of American Indians and natural resources of importance to American Indians.

NRC FORM 335
(9-2004)
NRCMD 3.7

U.S. NUCLEAR REGULATORY COMMISSION

BIBLIOGRAPHIC DATA SHEET

(See instructions on the reverse)

1. REPORT NUMBER
(Assigned by NRC, Add Vol., Supp., Rev., and Addendum Numbers, if any.)

NUREG-1437, Volume 2, Revision 1

2. TITLE AND SUBTITLE

Generic Environmental Impact Statement for License Renewal of Nuclear Plants
Appendices
Draft Report for Comment

3. DATE REPORT PUBLISHED

MONTH	YEAR
July	2009

4. FIN OR GRANT NUMBER

5. AUTHOR(S)

6. TYPE OF REPORT

Technical

7. PERIOD COVERED *(Inclusive Dates)*

8. PERFORMING ORGANIZATION - NAME AND ADDRESS *(If NRC, provide Division, Office or Region, U.S. Nuclear Regulatory Commission, and mailing address; if contractor, provide name and mailing address.)*

Division of License Renewal
Office of Nuclear Reactor Regulation
U.S. Nuclear Regulatory Commission
Washington, DC 20555-0001

9. SPONSORING ORGANIZATION - NAME AND ADDRESS *(If NRC, type "Same as above"; if contractor, provide NRC Division, Office or Region, U.S. Nuclear Regulatory Commission, and mailing address.)*

Same as 8 above

10. SUPPLEMENTARY NOTES

11. ABSTRACT *(200 words or less)*

U.S. Nuclear Regulatory Commission (NRC) regulations allow for the renewal of commercial nuclear power plant operating licenses, depending on the outcome of an assessment to determine whether the nuclear plant can continue to operate safely and protect the environment during the 20-year period of extended operation. Renewal of a nuclear power plant operating license requires the preparation of an environmental impact statement (EIS). To support the preparation of these EISs, the NRC published the Generic Environmental Impact Statement for License Renewal of Nuclear Plants (GEIS) in 1996.

The NRC committed to review and revise the GEIS on a 10-year cycle, if necessary. This GEIS revision reviews and reevaluates the issues and findings of the 1996 GEIS. Lessons learned and knowledge gained during previous license renewal reviews provides a significant source of new information for this assessment. In addition, new research, findings, and other information were considered in evaluating the significance of impacts associated with license renewal. The intent of the GEIS is to determine which issues would result in the same impact at all nuclear power plants, and which issues require a plant-specific analysis for impact determinations. The GEIS is intended to improve the efficiency of the license renewal process by (1) providing an evaluation of the types of environmental impacts that may occur as a result of renewing the license of a nuclear power plant, (2) identifying and assessing the impacts that are expected to be generic (the same or similar), and (3) defining the number and scope of impacts that need to be addressed in plant-specific EISs. The GEIS revision identifies 78 environmental impact issues for consideration in plant-specific supplements to the GEIS.

12. KEY WORDS/DESCRIPTORS *(List words or phrases that will assist researchers in locating the report.)*

Generic Environmental Impact Statement for License Renewal of Nuclear Plants
GEIS
NUREG-1437, Revision 1
National Environmental Policy Act
NEPA
License Renewal

13. AVAILABILITY STATEMENT

unlimited

14. SECURITY CLASSIFICATION

(This Page)

unclassified

(This Report)

unclassified

15. NUMBER OF PAGES

16. PRICE

PRINTED ON RECYCLED PAPER

Printed
on recycled
paper

Federal Recycling Program