Categorical Exclusion Checklist for Proposed TVA Actions

Categorical Exclusion Number Claimed	Organization ID Number	**Tracking Number** *(NEPA Administration Use Only)*
1		24680

Form Preparer	Project Initiator/Manager	Business Unit
John Brellenthin	Jeffrey McGuire	NGD&C - Nuclear Generation Development

Project Title	Hydrologic Unit Code
Tritiated Water Storage Tank	06010201-190

Description of Proposed Action *(Include Anticipated Dates of Implementation)* ☒ Continued on Page 3 *(if more than one line)*

For Proposed Action See Attachments and References

Initiating TVA Facility or Office	TVA Business Units Involved in Project
Watts Bar Nuclear Plant	For Business Unit Listing See Attachments and References

Location *(City, County, State)*

For Project Location see Attachments and References

Parts 1 through 4 verify that there are no extraordinary circumstances associated with this action:

Part 1. Project Characteristics

Is there evidence that the proposed action---	**No**	**Yes**	**Information Source**
1. Is major in scope?	X		For comments see attachments
2. Is part of a larger project proposal involving other TVA actions or other federal agencies?		X	For comments see attachments
*3. Involves non-routine mitigation to avoid adverse impacts?	X		McGuire J. 07/06/2011
4. Is opposed by another federal, state, or local government agency?	X		McGuire J. 07/06/2011
*5. Has environmental effects which are controversial?	X		McGuire J. 07/06/2011
*6. Is one of many actions that will affect the same resources?	X		McGuire J. 07/06/2011
7. Involves more than minor amount of land?	X		McGuire J. 07/06/2011

* If "yes" is marked for any of the above boxes, consult with NEPA Administration on the suitability of this project for a categorical exclusion.

Part 2. Natural and Cultural Features Affected

Would the proposed action---	**No**	**Yes**	**Per-mit**	**Commit-ment**	**Information Source for Insignificience**
1. Potentially affect endangered, threatened, or special status species?	X		No	No	For comments see attachments
2. Potentially affect historic structures, historic sites, Native American religious or cultural properties, or archaeological sites?	X		No	No	For comments see attachments
3. Potentially take prime or unique farmland out of production?	X		No	No	For comments see attachments
4. Potentially affect Wild and Scenic Rivers or their tributaries?	X		No	No	Brellenthin J. 08/31/2011
5. Potentially affect a stream on the Nationwide Rivers Inventory?	X		No	No	Brellenthin J. 08/31/2011
6. Potentially affect wetlands, water flow, or stream channels?	X		No	No	For comments see attachments
7. Potentially affect the 100-year floodplain?	X		No	No	For comments see attachments
8. Potentially affect ecologically critical areas, federal, state, or local park lands, national or state forests, wilderness areas, scenic areas, wildlife management areas, recreational areas, greenways, or trails?	X		No	No	For comments see attachments
9. Contribute to the spread of exotic or invasive species?	X		No	No	Brellenthin J. 08/31/2011
10. Potentially affect migratory bird populations?	X		No	No	For comments see attachments
11. Involve water withdrawal of a magnitude that may affect aquatic life or involve interbasin transfer of water?	X		No	No	Brellenthin J. 08/31/2011
12. Potentially affect surface water?	X		No	No	For comments see attachments
13. Potentially affect drinking water supply?	X		No	No	Brellenthin J. 08/31/2011
14. Potentially affect groundwater?	X		No	No	For comments see attachments
15. Potentially affect unique or important terrestrial habitat?	X		No	No	For comments see attachments
16. Potentially affect unique or important aquatic habitat?	X		No	No	For comments see attachments

Part 3. Potential Pollutant Generation

Would the proposed action potentially (including accidental or unplanned)---	No	Yes	Per-mit	Commit-ment	Information Source for Insignificience
1. Release air pollutants?		X	No	No	For comments see attachments
2. Generate water pollutants?		X	No	Yes	For comments see attachments
3. Generate wastewater streams?	X		No	No	Brellenthin J. 08/31/2011
4. Cause soil erosion?	X		No	No	Brellenthin J. 08/31/2011
5. Discharge dredged or fill materials?	X		No	No	Brellenthin J. 08/31/2011
6. Generate large amounts of solid waste or waste not ordinarily generated?	X		No	No	For comments see attachments
7. Generate or release hazardous waste (RCRA)?	X		No	No	For comments see attachments
8. Generate or release universal or special waste, or used oil?	X		No	No	For comments see attachments
9. Generate or release toxic substances (CERCLA, TSCA)?	X		No	No	Brellenthin J. 10/04/2011
10. Involve materials such as PCBs, solvents, asbestos, sandblasting material, mercury, lead, or paints?	X		No	No	Brellenthin J. 08/31/2011
11. Involve disturbance of pre-existing contamination?	X		No	No	Brellenthin J. 08/31/2011
12. Generate noise levels with off-site impacts?	X		No	No	Brellenthin J. 08/31/2011
13. Generate odor with off-site impacts?	X		No	No	Brellenthin J. 08/31/2011
14. Produce light which causes disturbance?	X		No	No	Brellenthin J. 08/31/2011
15. Release of radioactive materials?	X		No	No	Brellenthin J. 08/31/2011
16. Involve underground or above-ground storage tanks or bulk storage?		X	No	Yes	For comments see attachments
17. Involve materials that require special handling?	X		No	No	Brellenthin J. 08/31/2011

Part 4. Social and Economic Effects

Would the proposed action---	No	Yes	Commit-ment	Information Source for Insignificience
1. Potentially cause public health effects?	X		No	Brellenthin J. 08/31/2011
2. Increase the potential for accidents affecting the public?	X		No	Brellenthin J. 08/31/2011
3. Cause the displacement or relocation of businesses, residences, cemeteries, or farms?	X		No	Brellenthin J. 08/31/2011
4. Contrast with existing land use, or potentially affect resources described as unique or significant in a federal, state, or local plan?	X		No	Brellenthin J. 08/31/2011
5. Disproportionately affect minority or low-income populations?	X		No	Brellenthin J. 08/31/2011
6. Involve genetically engineered organisms or materials?	X		No	Brellenthin J. 08/31/2011
7. Produce visual contrast or visual discord?	X		No	Brellenthin J. 08/31/2011
8. Potentially interfere with recreational or educational uses?	X		No	Brellenthin J. 08/31/2011
9. Potentially interfere with river or other navigation?	X		No	Brellenthin J. 08/31/2011
10. Potentially generate highway or railroad traffic problems?	X		No	Brellenthin J. 08/31/2011

Part 5. Other Environmental Compliance/Reporting Issues

Would the proposed action---	No	Yes	Commit-ment	Information Source for Insignificience
1. Release or otherwise use substances on the Toxic Release Inventory list?	X		No	Brellenthin J. 08/31/2011
2. Involve a structure taller than 200 feet above ground level?	X		No	Brellenthin J. 08/31/2011
3. Involve site-specific chemical traffic control?		X	No	For comments see attachments
4. Require a site-specific emergency notification process?		X	No	For comments see attachments
5. Cause a modification to equipment with an environmental permit?	X		No	Brellenthin J. 08/31/2011
6. Potentially impact operation of the river system or require special water elevations or flow conditions??	X		No	Brellenthin J. 08/31/2011
7. Involve construction of a new building or renovation of existing building (i.e., major changes to lighting, HVAC, and/or structural elements of building of 2000 sq. ft or more) on which TVA will pay/pays the utilities??	X		No	Brellenthin J. 08/31/2011

Description of Proposed Action *(Include Anticipated Dates of Implementation)*	☐ Continued from Page 1

Parts 1 through 4: If "yes" is checked, describe in the discussion section following this form why the effect is insignificant. Attach any conditions or commitments which will ensure insignificant impacts. Use of non-routine commitments to avoid significance is an indication that consultation with NEPA Administration is needed.

An ☐ EA or ☐ EIS will be prepared.

Based upon my review of environmental impacts, the discussions attached, and/or consultations with NEPA Administration, I have determined that the above action does not have a significant impact on the quality of the human environment and that no extraordinary circumstances exist. Therefore, this proposal qualifies for a categorical exclusion under Section 5.2. 1 *of TVA NEPA Procedures.*

Project Initiator/Manager Jeffrey McGuire		Date 10/04/2011
TVA Organization UNKN	E-mail jjmcguir@tva.gov	Telephone

Site Environmental Compliance Reviewer

Signature

Final Review/Closure

John Brellenthin 10/04/2011

Signature

Other Review Signatures *(as required by your organization)*

Ruth M Horton 09/26/2011

Signature

Jerri L Phillips 09/28/2011

Signature

John Brellenthin 09/28/2011

Signature

Signature

Signature

Signature

Attachments/References

Description of Proposed Action

Construct a 500,000 gallon Tritiated Water Storage tank and associated pumps and piping at Watts Bar Nuclear (WBN), and install a reverse osmosis/demineralizer (RO) system in the existing Waste Packaging Area. This tank will store treated tritiated water from both Watts Bar Units and have sufficient capacity to store and release the water during appropriate time periods in order to maintain releases within Tech Spec 5.7.2.7 limits, and will allow the station to plan fewer numbers of releases per year. The stainless steel tank is approximately 45 feet in diameter and 45 feet tall. Secondary containment will be provided by setting the storage tank into a larger diameter, open tank with a rain shield (about 55' diameter x 30' high) to provide full capacity retention. The piping will be designed to protect ground water in conjunction with the nuclear industry's voluntary groundwater protection initiative.Additonal details can be found in the attached Technical information

document.

Project Location

The tank will be located on open ground west of the Unit-1 Primary Water and Refueling Water Storage Tanks within the plant's existing protected area. See location map in the attached project description.

TVA Business Units Involved in Project

NGD&C - Nuclear Generation Development, NUCGEN - Nuclear Engineering, NUCGEN - Nuclear Operations

CEC Comment Listing

Part 1 Comments

1. See attached Project description and location map.
   By: John Brellenthin 08/31/2011
   Files: Tritium tank description.docx 09/22/2011 225,237 Bytes
1. Additional information on the project scope and details of the design and construction, as well as a location map can be found in the attachment.
   By: John Brellenthin 08/31/2011
2. This action is connected to DOEs Final Supplemental Environmental Impact Statement (FSEIS) for the Production of Tritium in Commercial Light Water Reactors.
   By: John Brellenthin 09/22/2011

Part 2 Comments

1. TVA's Final Supplemental Environmental Impact Statement (FSEIS) on completion of Watts Bar Nuclear Plant Unit 2 (Project 2006-124) Table S-1 provided a summary of direct, indirect, and cumulative environmental effects from completion of WBN Unit 2. With regard to endangered threatened or special species the SEIS concluded that there would be no effect on state-listed or federally listed aquatic animals or their habitats. The tritiated water storage tank is planned for an area currently dedicated to plant operations and is within the WBN Unit 2 FSEIS project study area.
   By: John Brellenthin 09/26/2011
1. Reference Watts Bar Unit 2 FSEIS.
   By: Jeffrey McGuire 09/26/2011
2. TVA's FSEIS on completion of WBN Unit 2 (Project 2006-124) Table S-1 provides a summary of direct, indirect, and cumulative environmental effects from completion of WBN Unit 2. With regard to cultural resources, the FSEIS concluded that historic resources on and adjacent to the site and archaeological resources within the area of potential effect would not be adversely affected by WBN Unit 2 construction. The tritiated water storage tank is planned for and area currently dedicated to plant operations and is within the WBN Unit 2 FSEIS project study area.
   By: John Brellenthin 09/26/2011
3. The project is located within the plant protected area, which has been dedicated to industrial use since construction began at the WBN site.
   By: John Brellenthin 09/22/2011
6. No distubance is planned for any area outside the plant protected area.
   By: John Brellenthin 08/31/2011
7. If the proposed tank is constructed in the area shown highlighted on the attached map, then the tank would be outside of the

100-year floodplain and there would not adverse impacts to the Probable Maximum Precipitation (PMP) site drainage elevations.
By: Roger A. Milstead 09/16/2011
Files: WBNsiteplan.pdf 09/16/2011 511,373 Bytes

8. TVA's FSEIS on completion of WBN Unit 2 (Project 2006-124) Table S-1 provided a summary of direct, indirect, and cumulative environmental effects From completion of WBN Unit 2. With regard to Natural Areas, the SEIS concluded that no impacts would occur to the five natural areas within 5 miles of WBN, including the Chickamauga State Mussel Sanctuary. The project is located within the plant protected area which has been dedicated to industrial use since construction began at the WBN site.
By: John Brellenthin 09/26/2011

10. The proposed structures should not be tall enough to impact low flying migratory birds, and the project location adjacent to the major plant buildings, plus the continuous lighting of the area should be sufficient to allow avoidance of the tank.
By: John Brellenthin 08/31/2011

12. An application for coverage under the construction stormwater general permit will be submitted and appropriately maintained if more than 1 acre of land is disturbed at any given time (taking into account applicable disturbed areas not associated with this project).
By: Travis R. Markum 09/22/2011

12. TVAs FSEIS on completion of WBNPlant Unit 2 (Project 2006-124) Table S-1 provides a summary of direct, indirect, and cumulative environmental effects from completion of WBN Unit 2. With regard to surface water, the FSEIS concluded that increases in flows, and use of treatment chemicals in systems associated with the additional operation of Unit 2 would not impact surface waters if compliance with NPDES permit limits was maintained. This project will provide the capacity to store tritiated water to provide flexibility in scheduling releases to meet TECH SPEC and NPDES permit limitations and should reduce the number of releases in a given year.
By: John Brellenthin 09/26/2011

14. The piping will be designed to protect ground water from leaking pipes in conjunction with the nuclear industry"s voluntary groundwater protection initiative. The design could consist of a trench or tunnel into which the pipes are placed, use of a double-walled pipe system, stainless steel pipe, HDPE (high density polyethylene) pipe, or routing the pipe above ground for visual inspection.
By: John Brellenthin 08/31/2011

15. The project is located within the plant protected area, which has been dedicated to industrial use since construction began at the the WBN site.
By: John Brellenthin 09/22/2011

16. See response to question 12 above.
By: John Brellenthin 09/22/2011

Part 3 Comments

1. Some minor emissions can be expected resulting from use of cranes, and other construction equipment, but they are within the levels generally experienced already on the site and no special equipment should be necessary for the project.
By: John Brellenthin 08/31/2011

1. No
By: Jeffrey McGuire 07/06/2011

2. An application for coverage under the construction stormwater general permit will be submitted and appropriately maintained if more than 1 acre of land is disturbed at any given time (taking into account applicable disturbed areas not associated with this project).
By: Travis R. Markum 09/22/2011

2. Small amounts of runoff may be expected during construction, and they will be controlled using Best Management Practices (BMPs). The construction area to be disturbed should be less than one acre at any given time.
By: John Brellenthin 09/22/2011

6. Wastes generated should be sorted by construction and demolition wastes and solid (trash) wastes. Site environmental staff should approve generation and disposal plan.
By: Kenneth F. Hickerson 09/22/2011

7. Review anticipated waste generation with site environmental staff. Send only to approved ERAL facility.
By: Kenneth F. Hickerson 09/16/2011

CEC Comment Listing

8. Review anticipated waste generation with site environmental staff.
   By: Kenneth F. Hickerson 09/16/2011
8. All new oils or used oil on site will be controlled according to the existing programs at WBN.
   By: Andrew F Polahar 09/01/2011
16. I know the tank sizes are nominal but the numbers quoted show the secondary containment smaller than the primary tank. In addition a 10 year 24 hour storm in the Watts Bar area is 5 inches of rain. The final design numbers need to comply with this criteria. The secondary containment sump pump needs to be operated in manual. It is implied (but not defined)that this is the process since any accumulation in the containment will be sampled prior to pumping.
   By: Andrew F Polahar 09/01/2011
16. A summary of the tanks specification document describing the tank and secondary containment design, along with selected drawings has been added as an attachment.
   By: John Brellenthin 09/26/2011
   Files: Tritium Tank Specifications .pdf 09/26/2011 752,090 Bytes
16. Above ground 500,000 gallon tank with full secondary containment (tank within a tank design). The tank overflow to secondary containment is at approximately 44 feet,so the maximum volume is ~523443 gal not counting the area taken up by the bladder minus ~ 1000 gal for the overflow storage which will be inside the containment for a total volume of less than 522443 gal for the storage tank. This is within the approximately 533,000 gallon capacity of the secondary containment tank. The secondary containment tank will be equipped with a rain shield to exclude most rainfall, and any leak above the rain shield must have a path to the secondary containment.
   By: John Brellenthin 09/26/2011

Part 5 Comments

3. All chemicals used on the site for construction of the tank and associated equipment for this project will be reviewed and approved under the site Chemical Traffic Control program.
   By: John Brellenthin 08/31/2011
4. Reference is ECM-8, the site Spill Prevention, Control and Countermeasures (SPCC) Plan. Reporting of spills should be made to the Shift Manager at the plant.
   By: John Brellenthin 10/04/2011

CEC Commitment Listing

Part 3 Commitments

2. WBN NPDES permit's flow schematic will be updated and submitted to the permitting authority prior to implementing final changes to liquid rad wastewater treatments and flows.
   By: Travis R. Markum 10/04/2011
16. The final design will include the capability to operate the secondary containment discharge pump(s) in the manual mode to avoid the release of contaminated water prior to treatment.
   By: John Brellenthin 10/04/2011

Specifications and Description for Tritium Water Storage Tank at Watts Bar Nuclear Plant (WBN)

Purpose and Concept

The purpose of this tank is to store tritiated water which has been treated with the station's existing liquid radwaste processing system and a newly planned reverse osmosis/demineralizer system. The existing system is located in the Waste Packaging Area and space has been identified to also locate the newly planned reverse osmosis/demineralizer system in the Waste Packaging Area. The stored tritiated water will eventually be released to the environment via the existing pathway using the cooling tower blow down system. The new tritiated water storage tank will be common to both Watts Bar Units 1 and 2 and store radioactive water from both units.

The type of tank being considered is approximately 45 feet in diameter and 45 feet tall with a domed roof. The tank will be of stainless steel construction and include an internal membrane bladder at the top to prevent evaporation. This system will include an overflow line piped to a 1,000 gallon metal tank to prevent spills from the overflow line from contaminating the area surrounding the tank. Piping interconnections will be made with the existing Waste Disposal system to allow the existing Monitor Tank pumps to fill the new tank. Two new pumps will be located in the Waste Packaging Area of the station and used to convey tank contents to the current station effluent system that incorporates dilution with cooling tower blow down. In addition, the design will allow the contents of the tank to be returned to the current liquid radwaste system and a newly proposed mobile reverse osmosis/demineralizer system that is intended to be a mobile unit located in the Waste Packaging Area.

The new tank will have sufficient capacity to allow TVA to store large volumes of tritiated water produced during portions of the nuclear fuel cycle and release the water during appropriate time periods in order to maintain releases within mandated limits [Tech Spec 5.7.2.7]. In addition, the new tank will have the storage capacity to allow the station to plan fewer numbers of releases per year that will save administrative costs associated with preparing for a release. The tank will be common to both Watts Bar Units 1 and 2 and store processed liquid radioactive waste from both units. The process design intent is to only direct highly purified water to the new storage tank. Liquid radwaste water will be treated with the current liquid radwaste demineralizer system (known as ALPS for advanced liquid process system) and a newly planned mobile reverse osmosis/demineralizer unit. The current ALPS system is supplied and operated by a nuclear service company, Energy Solutions. Energy Solutions has also offered a mobile reverse osmosis unit with a polishing demineralizer unit to highly purify the effluent of the ALPS system prior to directing it to the new storage tank. The system design will feature piping configurations to return the new tank contents to the station if the water purity is not acceptable for release. Water returned to the station may be again treated by the ALPS system and the newly planned reverse osmosis unit to achieve the desired purity.

DESIGN FEATURES AND LAYOUT

The storage tank system under consideration is intended to perform the following functions:

- Store tritiated water from the outlet of the Waste Disposal (ALPS) system at TVA Watts Bar. The nominal tank capacity will be 500,000 gallons and serve both reactor units.
- Transfer water from the existing Monitor Tank (0-TANK-077-0206), using the existing Monitor Tank Pumps (0-PMP-077-2094 / 2096), to the new tritiated water storage tank. Transfer shall be via an interconnection with the 3" Mobile Demineralizer Supply Line located in the Waste Packaging Area and upstream of the connections for the Mobile demineralizer (see Appendix B).
- Provide interconnections for a future mobile reverse osmosis/demineralizer system that may be operated in series or parallel with the existing ALPS liquid waste system.
- Discharge water from the new tritiated water storage tank to the environment through the cooling tower blowdown line. The tank transfer pump discharge shall interconnect to the 2" Cask Decon Line, upstream of the existing Monitor Tank discharge radiation monitor (0-RE-90-122).
- Return water from the tritiated water storage tank to the station liquid waste processing system for further purification, if required.
- Transfer of water to the tritiated water tank, processing of the water in a mobile reverse osmosis/demineralizer, and discharge to the environment should not interfere with the ability of the existing Waste Disposal system to transfer and process water.

The tank system will be in accordance with the requirements of Regulatory Guide 1.143 "Design Guidance for Radioactive Waste Management Systems, Structures, and Components Installed in Light-Water-Cooled Nuclear Power Plants" Revision 2. The tank will be supplied to the requirements of API 650 and pipe and valves will be per ANSI B31.3. These standards are in accordance with the requirements of Table 1 of Reg. Guide 1.143. The tank foundation will be in accordance with the requirements of API 650. A secondary containment will be provided by setting the storage tank into a larger diameter, open top tank (about 55' diameter x 30' high) to provide full capacity retention. The secondary containment will be provided with a sump pump and roof for management of rainwater. Sump water will be sampled and if non-radioactive be discharged to the Turbine Building sump system which is a monitored release path. Two new 100% capacity transfer pumps will be provided for the storage tank and will be located in the Waste Packaging area The pumps will be capable of discharging tank water to the environment via the cooling tower blowdown flow path, as used by the Monitor tank system. The new transfer pumps will also be interconnected to the liquid radwaste processing system located in the Waste Packaging Area. In the event that tritiated water in the storage tank is found to be unacceptable for discharge to the blowdown flow, the tank discharge may be routed to the liquid radwaste system for further processing. Since the water being transferred to and from the outdoor storage tank contains tritium, the piping will be designed to protect ground water from leaking pipes in conjunction with the nuclear industry's voluntary groundwater protection

initiative. The design could consist of a trench or tunnel into which the pipes are placed, use of a double-walled pipe system, stainless steel pipe, HDPE (high density polyethylene) pipe, or routing the pipe above ground for visual inspection.
The tank will be located in an open field west of the Unit-1 Primary Water and Refueling Water Storage Tanks. See attached location map below.

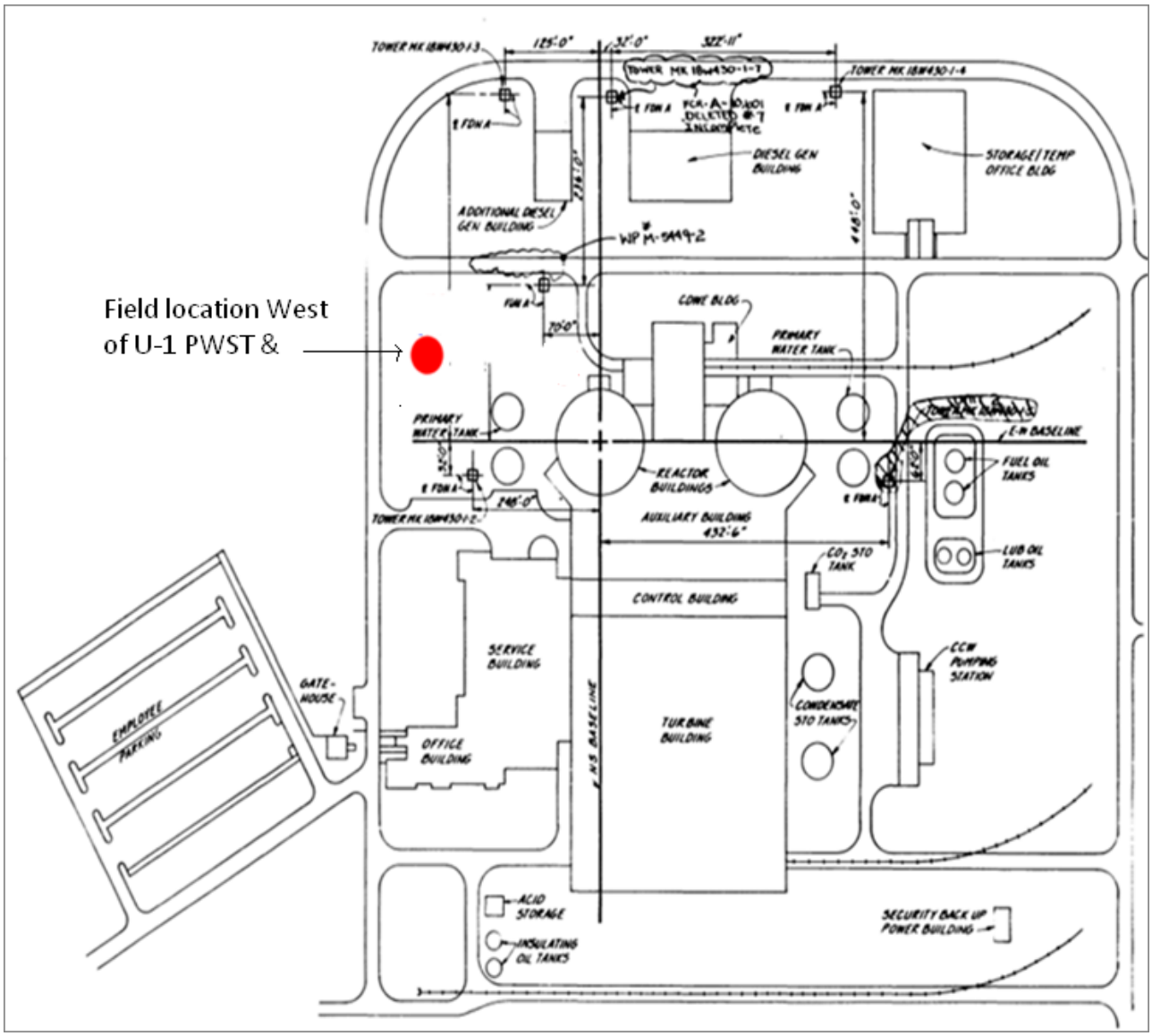
Field location West of U-1 PWST &
DIESEL GEN BUILDING
STORAGE/TEMP OFFICE BLDG
ADDITIONAL DIESEL GEN BUILDING
CONE BLDG
PRIMARY WATER TANK
REACTOR BUILDINGS
AUXILIARY BUILDING
CONTROL BUILDING
SERVICE BUILDING
OFFICE BUILDING
TURBINE BUILDING
FUEL OIL TANKS
LUB OIL TANKS
CCW PUMPING STATION
CONDENSATE STO TANKS
GATE-HOUSE
EMPLOYEE PARKING
ACID STORAGE
INSULATING OIL TANKS
SECURITY BACK UP POWER BUILDING

MECHANICAL EQUIPMENT

The primary mechanical equipment includes the storage tank, two tank transfer pumps, interconnecting pipe, and valves needed to perform the functions outlined in Section 2.0. The new system is designed with the capability to allow interconnection with a new reverse osmosis processing unit with an effluent polishing demineralizer. However, this RO equipment is expected to be provided and operated by a nuclear service company in the same manner as the current liquid radwaste demineralizer system.

1. Storage Tank

The tritiated water storage tank (TWST) will consist of a cylindrical shell, approximately 45' diameter by 45' high with a domed roof and flat bottom. During detailed design work, it may be determined that the tank should be somewhat larger in diameter to prevent exceeding soil parameters to minimize settling. The tank will be an atmospheric tank in accordance with API 650 code requirements. A bladder will be provided at the top to limit the release of tritium via evaporation because the evaporation would be an unmonitored release from the station. The tank overflow pipe will contain a loop seal filled with clean water to further limit tritium release. The tank will be constructed of ASTM A312, TP 304 L stainless steel materials, 3/8" thick stainless steel plate is anticipated for the tritiated water storage tank. The tank will be provided with external thermal insulation. A nitrogen connection will be provided to initially vent air from under the bladder as the tank fills and later provide a nitrogen blanket inside the tank to facilitate movement of the bladder without damage.

2. Overflow tank

The TWST will include an overflow line piped to a 1,000 gallon tank. This design will prevent small spills from the overflow line from contaminating the area surrounding the tank.

3. Pumps and Pipe

Preliminary evaluations indicate that the existing Monitor tank pumps are capable of transferring water at approximately 150 gpm from the Monitor tank to the new tritiated water storage tank. New manual isolation valves and check valves will be added to the existing piping system to allow the storage tank to receive water from the Monitor tank pumps. A sump with pump will be provided within the secondary containment area of the new storage tank. The sump is intended to collect rain water that may enter the secondary containment area. Sump water will be sampled, analyzed, and if nonradioactive discharged to the turbine building sump system. For the High Bridge cost estimate it was assumed the new storage tank sump would tie in with the discharge of the RWST sump discharge to the turbine building sump system. This procedure is the same as the method used for sump water collected from the moat around the Refueling Water Storage Tanks. Interconnection with the existing Waste Disposal system will be made in the Waste Packaging Area near the mobile demineralizer unit. The location is near station column lines Y and A5 at floor elevation 729' of the Auxiliary building. This connection will be made on the 3" diameter pipe header upstream of valve 2859 shown

on P&ID 1-47W830-3. The new pipe line will be seamless stainless steel and will exit the building via a core bore through the concrete wall along station column line A5. An air operated valve for fill line shutoff on tank high level will be located in the line prior to the line exiting the building. Outside the building the line to the new tank inlet will be routed in accordance with TVA's tritiated groundwater program. This will require the 4" piping be in a trench, vault or above ground. The preferred configuration is in a covered trench. The tank must have a means of ensuring adequate mixing requiring either a sparger inside the tank or an inlet nozzle near the top of the tank. Two new 100% capacity transfer pumps will be provided for the storage tank and will be located in the Waste Packaging area near columns rows Y and A5 at grade elevation. New piping for the pumps will include a 4" nominal suction pipe from the outdoor tank. This pipe will be routed parallel to the tank fill pipe from the tank through the building wall at column line A5. The pumps will be capable of discharging tank water to the environment via the cooling tower blowdown flow path, as used by the Monitor tank system. The pump discharge pipe will be 3" nominal, routed south along column line A5, and down through the floor at elevation 729' into the Cask Decontamination Collector Tank room. The discharge connection will be made to existing piping in the Cask Decontamination Collector Tank Room at a point downstream of the Cask Decontamination Filters and upstream of radiation monitor (0-RE-90-122) shown on P&ID 1-47W830-2. Preliminary evaluations indicate that a pump similar in size to the existing Monitor Tank pump will be adequate for the intended service. The new transfer pumps will also be interconnected to the liquid radwaste processing system located in the Waste Packaging Area. In the event that tritiated water in the storage tank is found to be unacceptable for discharge to the blowdown flow, the tank discharge may be routed to the liquid radwaste system for further processing.

Preliminary specifications for mechanical equipment are summarized below:

- Transfer pumps: 150 gpm, 200' TDH, 20 BHP, 480 VAC
- Sump Pump 50 gpm, 1 HP, 480 VAC
- Pipe: 3" and 4" nominal diameter, schedule 40s seamless SS pipe to ASTM 312
- Manual Valves: 3" and 4" nominal size gate or globe valves, SS, 150 lb pressure class
- Check valves: 3" and 4" nominal size check valves, SS, 150 lb pressure class
- Control Valve: 3" nominal size valve with air operator, 120vac solenoid & 2-DPDT limit switches
- Design Temperature 110 degrees F
- Design Pressure Shut off head of transfer pumps (about 250')
- Instrument air piping 1/2" nominal air supply line to the tank fill shut off valve

Regulatory Guide 1.143 describes requirements for piping and valves in liquid radwaste systems. The piping system design, construction, inspection, and testing shall be in accordance with ANSI B31.3 for "Process Piping." For freeze protection, electrical heat tracing and thermal insulation are required for pipe and valves located outdoors and above ground. Based on existing outdoor tanks at WBN, no tank heaters are anticipated for the new tritiated water storage tank.

Additional Considerations

Since the water being transferred to and from the outdoor storage tank contains tritium, a design which protects ground water from leaking pipes in conjunction with the nuclear industry's voluntary groundwater protection initiative is required. For the High Bridge price estimate a covered trench for outside piping and stainless steel pipe was assumed. It was also assumed the trench had a sump system and allowed for piping inspections. This is the most desirous configuration for outside piping. If any other configuration is proposed in the design of outside piping, such as routing piping through the Additional Equipment Building, use of HDEP pipe or double walled pipe or using above ground piping, TVA will consider that configuration based on the effectiveness of the configuration to protect ground water from leaking piping.

4. Reverse Osmosis Unit and Polishing Demineralizer.

A nuclear service company will furnish and operate a reverse osmosis (RO) unit to highly purify liquid radwaste before the water is routed to the tritiated water storage tank. It is also anticipated that the RO unit will require a polishing demineralizer for the RO effluent. This will be located in the station Waste Packaging Area. Currently this space is occupied with DAW storage and an enclosure for decontaminating tools or other items. The stored DAW can be removed and the decontamination enclosure is constructed of light weight metal panels that can be easily disassembled. Therefore, space can be made available for the RO unit and demineralizer. Reconfiguring the Waste Packaging Area to accommodate a RO unit and demineralizer should be considered an integral part of a station modification to provide a tritiated water storage tank system.

STRUCTURAL DESIGN

1. Storage Tank Foundation

The tank will be located in an area west of Unit 1 RWST and PWST. The foundation will be on a slightly elevated area bracketed by two 36” underground non-safety related ERCW return lines to the southeast and underground utilities consisting of fire main, service air, sewage and storm drain lines to the northwest.

Settlement must be minimized to eliminate potential damage to underground utilities in the proximate area, therefore it is anticipated piles will need to be installed. It is estimated; approximately 42 piles 50’ long and 18” in diameter will be needed. The piles should rest on bed rock and assure that settlement will not impact the tank or the proximate utilities and underground lines.

In accordance with the requirements of Reg. Guide 1.143, Table 1, the tank shall meet the requirements of API 650. As such, the tank foundation will also be required to be in accordance with the requirements of API 650. For the High Bridge cost estimate a 60’ diameter, 2’ thick rebar reinforced foundation with piles was assumed.

2. Secondary Containment Requirements

This tank will have a secondary containment designed for 100% of the stored liquid. This design will consist of setting the storage tank into a larger diameter, open top tank (about 55' diameter x 30' high) to provide full capacity retention. With this tank within a tank design, an annular space of about 5 feet will exist between the inner and outer tank walls. This access space would be large enough to accommodate maintenance and inspection activities.
The TWST will be stainless steel construction, while the outer tank (secondary containment) may be painted carbon steel. Piping for the TWST will penetrate the outer tank and be sealed at the wall penetrations. The bottom of the outer tank will set on the concrete pad and the bottom of the inner tank will set on the outer tank. If the bottom of the outer tank is of a dissimilar material than the inner tank, an insulating layer will be required between the two tanks to dissimilar metals. Alternatively the bottom of the outer could be of the same material of the inner tank. A rain hood, similar in design to the refueling water storage tank will be included to minimize rain water accumulation in the outer tank.

3. Miscellaneous new foundations and penetrations through existing floors and walls.

Two small concrete pads are included in the project design for setting the pumps that take suction from the new tritiated water storage tank. These pads will be located in the Waste Packaging Area along column row A5.
The system design for piping and conduit requires penetration of the Auxiliary Building floor at elevation 729' for a 3" nominal pipe and conduit carrying instrumentation signals. There is a suitable penetration in this location which will require removal of a section of abandoned dematerialized water line going to the cast washdown pit. Wall penetrations will include a 3" nominal fill line to the tank and a 4" nominal tank discharge line (transfer pump suction). Both pipes will penetrate the building wall along column line A5 just north of column line Y. Conduit runs for the new tank will also penetrate the A5 wall in parallel with the pipelines.

ELECTRICAL EQUIPMENT

1. Auxiliary Power Requirements

MCC 480V Cnds Deminrlzr Waste Evap Bldg. MCC (0- MCC-249-1) is located in the Condensate Demineralizer Waste Evaporator Building. It is adjacent to the Waste Packaging Building and has many available locations for adding loads. For these reasons it is recommended it be utilized it for the following loads:

- Two transfer pumps of approximately 20 BHP, 460 V, 3 phase
- One sump pump approximately 1 BHP, 460V, 3 phase (feed shared with Heat Tracing feed)
- Control power requirements for level controls and alarms
- One 15 kVA Heat Tracing step-down transformer with 120/208V distribution panel for outdoor exposed piping

2. Instrumentation & Controls

Monitoring of TWST discharge for offsite liquid releases will use existing radiation monitoring equipment (0-RE-90- 122). The discharge path from the new tritiated water storage tank will be interconnected to the present monitoring system used to discharge processed water into cooling tower blow down for dilution. There are no changes to the present discharge monitoring or controls system.
Control from the Waste Disposal Panel is not required. Therefore, controls for the new transfer pumps and other related tank controls will be located in a new local control panel. The new control panel will be located adjacent to the new transfer pumps in the Waste Packaging Area. Local alarm lights and logic relays will be provided on this panel. Additionally, pump trip alarms, tank overflow alarm, shutoff valve closed, and secondary containment high level alarm to monitor for leaks will provide inputs to the plant computer for remote indication. Interlocks will be required to the existing Waste Disposal Panel for the Monitoring Pump interfaces and/or shutoff valve closed related alarm. Control for the sump pump will be locally at the pump with a local starter fed in common with the heat tracing transformer. Heat tracing distribution will be self controlled with a thermostat shutoff for the distribution panel.
Anticipated alarms and related control interfaces are as follows:

- Tank Low-Low Level alarm (loss of transfer pump suction)
- Tank High Level alarm (impending overflow)
- Tank High-High Level alarm and trip (auto isolation of tank inlet valve and/or trip the existing Monitor Pumps)
- Tank Decreasing Level alarm (tank leak indication)
- Flow Detection alarm in overflow tank
- Secondary Containment High Level (Level float switch at sump)
- Low Suction Pressure trip for transfer pumps

3. Physical Installation

The MCCs are located in the Condensate Demineralizer Waste Evaporator (CDWE) Building at EL 750’ Mezzanine and near column rows Y and A11. Cable routing will be in cable tray above the MCCs. However, cabling will be in conduit from the CDWE Building west into the Waste Packaging Area where the new transfer pumps are to be located and a new local control panel. This new local control panel will include any logic relays required for interlocks to the pumps and for display of local alarm indication lights, along with a computer I/O rack for computer inputs for the tritium water storage tank system and other local area inputs desired to be fed to the computer. The new local control panel is anticipated to be located north of column row Y and along column row A5. Outdoor conduit runs will be in parallel with new piping from the Waste Packaging Area to the new tank sump pump with level switch, heat tracing transformer with distribution panel and thermostat cutout contactor, and tank level switches. Conduit runs for the alarm connections to Waste Disposal Panel O-P-2 and the computer fiber optic home run connections will be routed south from the new local control panel along column row A5 to just south of column row X, then down to EL 692’ and continue south

to the Waste Disposal Panel. From there, the run will continue in instrument cable tray to the Control Building and up to the computer room on EL 713' at column rows C7 and M.

ADDITIONAL IMPACTS TO BE CONSIDERED IN DETAILED DESIGN

1.Licensing.

Based on the normal operational radiological analysis described in Section 12.4 of the FSAR, dose rates at the restricted area boundary or in the restricted area are from gaseous effluent, ground contamination, and gamma shine from yard tanks. The four yard tanks that dominate the gamma dose are two makeup water storage tanks and two refueling water storage tanks. An additional tritiated water storage tank will contribute to dose from gamma shine. Some dose will be directly through the tank secondary containment and some will be scatter over the secondary containment to the previously determined dose points. The FSAR and the ODCM list an annual dose value of 105 mrem at the restricted area boundary from tanks currently in the yard. The calculation(s) that support that value will require revision since a new gamma source is being added to the yard. Any text, drawings, and figures, including those in the FSAR and ODCM that discuss and/or depict yard tank layout, dose point locations, and normal operational radiological boundaries may be impacted by the additional yard tank. Each of these documents will require revision as part of an engineering package to add a tritiated water storage tank on site.
A liquid radwaste tank rupture is not explicitly analyzed in Chapter 15 of the Watts Bar FSAR. However, compliance with 10 CFR 20.1302(b)(2)(i) is demonstrated by implementing Technical Specification 5.7.2.15,"Explosive Gas and Storage Tank Radioactivity Monitoring Program". In addition, tank discharges are covered under Technical Specification 5.7.2.7, "Radioactive Effluent Controls Program". A new tritiated water storage tank will be incorporated into those Technical Specifications. Technical Specification 5.7.2.3 is the Offsite Dose Calculation Manual (ODCM). The ODCM has sections related to control and surveillance requirements, effluent monitoring, and calculation methodologies. Dose contributions from individual yard tanks are below the level of detail provided in these discussions. It is anticipated that the FSAR and ODCM changes can be accomplished by the 10 CFR 50.59 process and an NRC license change will not be required. Preparation of the 10 CFR 50.59 documentation will be part of the engineering design.

2. Building Combustible Load Impacts from New Pumps

The station fire analyses will require revision to account for the combustible load added by the two new transfer pumps in the Waste Packaging Area. Each pump is expected to contain about a gallon of lubricating oil.

3. Security Impacts

A review of area lighting or line of sight defense for internal protected area response by security has not been completed at this time. Security impacts should include contingencies for a new security tower and one new high mast light.

SCHEDULE

1. Engineering Schedule

TVA estimates that 30 weeks will be required to complete prerequisite engineering activities and then prepare and issue an engineering change package. The engineering estimate is based upon the conceptual design presented herein for the tritiated water storage tank system and preparing the change package in accordance with TVA procedures.
The 30-week estimate is composed of the following durations and activities;

- 4 weeks – Prepare equipment purchase specifications
- 6 weeks – Issue equipment bid packages, receive bids, evaluate bids, and issue purchase orders
- 6 weeks – Drawing preparation by successful bidders
- 2 weeks – Review of suppliers drawings
- 12 weeks – Prepare and issue an engineering change package

2. Construction Schedule

Foundation and piling work is estimated to require 6 weeks of work before tank erection can begin. Two nationally recognized tank fabrication firms were surveyed for schedule duration. One indicated that a reasonable duration for tank erection work is 18 weeks and the other indicated 8 weeks. The 18-week duration includes contractor mobilization at the site, field fabrication of a stainless tank and a carbon steel containment structure, and contractor demobilization. Piping and electrical work should be scheduled in parallel with tank foundation and erection work. Work activities will be non-outage type, except for final interconnections to station operating systems. In summary, the construction schedule is estimated to be 24 weeks in duration.
Attached are a conceptual study and budgetary cost estimate performed by Sargent & Lundy and excerpts from a cost estimate performed by High Bridge Associates.

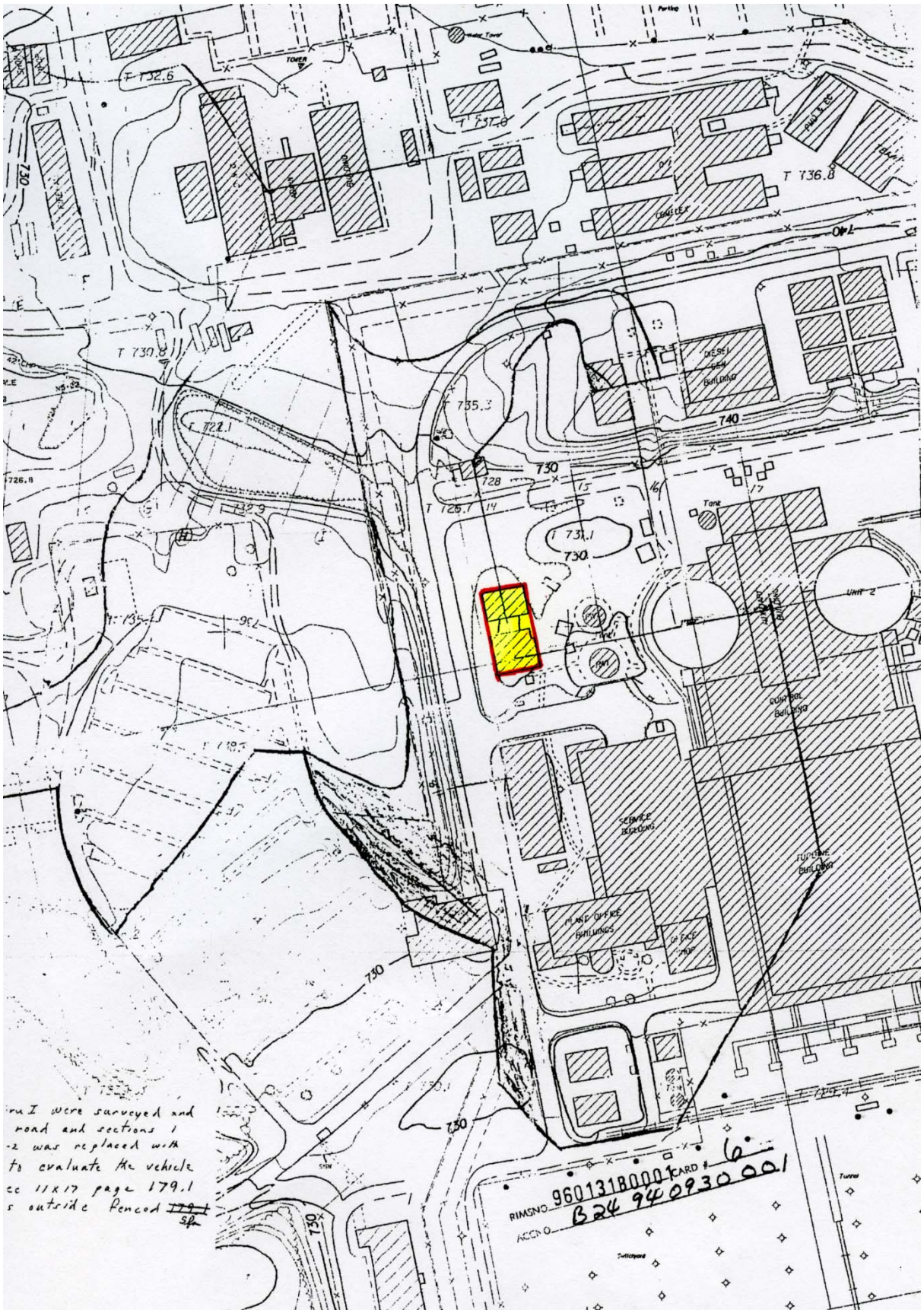

ru I were surveyed and
road and sections 1
-2 was replaced with
to evaluate the vehicle
ec 11x17 page 179.1
s outside fenced ~~179.1~~ 5fn

Fredrick J. Jensen, III
Senior Manager
(423) 752-7441
E-Mail: fredrick.j.jensen@sargentlundy.com

Sargent & Lundy LLC

August 31, 2011
Project No. 11290-227
Letter No. SL-TVA-WBN-1676

Tennessee Valley Authority
Watts Bar Nuclear Plant – Unit 1

Transmittal of Sargent & Lundy Approved
Standard Specification N3M-947
"Specification for Field-Erected Tritium Water Storage Tank"

Mr. Jeff McGuire
Tritium Program Manager
Tennessee Valley Authority
Watts Bar Nuclear Plant
1270 Nuclear Plant Road
Spring City, Tennessee 37381-2000

Dear Mr. McGuire:

This letter transmits Sargent & Lundy approved Standard Specification N3M-947, "Specification for Field-Erected Tritium Water Storage Tank".

Should you have any questions regarding this transmittal, please call me at (423) 752-7441 or Paul Kish at (312) 269-6797.

Yours very truly,

Fredrick J. Jensen, III
Senior Project Manager

FJJ:AEC:bdp
Enclosure
Copies:

L. W. Freeman	(1/0)	B. S. Campbell	(1/0)
E. D. Higgins	(1/0)	H. V. Garrett	(1/0)
R. R. Kirkpatrick	(1/0)	D. R. Jones	(1/0)
P. Kish	(1/0)	W. G. Sexton	(1/0)
E. L. Wright	(1/0)		

DMS/tvanuclear/wattsbar/11290-227/6.03

STANDARD SPECIFICATION COVER SHEET

TENNESSEE VALLEY AUTHORITY

NUCLEAR POWER

STANDARD SPECIFICATION

N3M-947

SPECIFICATION FOR
FIELD-ERECTED
TRITIUM WATER STORAGE TANK

	REVISION R0	R1	R2	R3	R4	R5
PREPARED	P. Kish *					
CHECKED	E. Wright *					
VERIFIED	E. Wright *					
APPROVED	J. Jensen *					
DATE	8/30/2011					

* See Page 3 for signatures.

Title: SPECIFICATION N3M-947 FOR FIELD-ERECTED TRITIUM WATER STORAGE TANK FOR TVA/WBN		**Revision Log**
Revision No.	**Description of Revision**	**Date Approved**
0	Initial Issue (Developed from TVA Standard Specification MEB-SS-10.32 for Field Erected Tanks)	

7.11 Foundations

Contractor shall furnish recommended plans for the concrete and sand foundation to be used with the flat-bottomed tank. The foundation will be constructed by TVA and made ready for tank erection. Foundation design for the tank shall be based on 2500-pound-per-square-foot safe bearing of soil.

7.12 Nozzle Loads

7.12.1 The nozzles for the tank shall be designed to withstand the loads listed below:

a. The direct forces (PX, PY, PZ) are, in addition to any internally induced pressure loads, a set of concentrated loads in three orthogonal directions, each not less than 0.01 times the force of the attached piping at yield (i.e., PX, PY, PZ = $0.01\sigma_Y A$).

b. The bending moments (MY, MZ) in the two orthogonal directions are each not less than 0.0707 times the moment of the attached piping at yield (i.e., MY, MZ = $0.0707\sigma_Y Z$).

c. The torsional moment, MX, is not less than 0.2 times the torsional moment of the attached piping at yield (i.e., M = $0.2\sigma_Y Z$).

d. The nozzle loads are to be considered as being applied simultaneously. σ_Y is the yield stress in tension, Z is the pipe section modulus, and A is the metal cross-sectional area of the pipe.

e. Yield stress, σ_Y, of attaching piping material may assumed to be 35,000 pounds per square inch for carbon steel and 30,000 pounds per square inch for stainless steel.

f. The tank shall be designed for the above nozzle loads and all other loads and load combinations required by API 650 and this specification.

7.13 Shop Inspection

7.13.1 No tank and/or material shall be shipped from its point of manufacture before it has been inspected and released by the Engineer or unless the Engineer authorizes inspection to be made elsewhere. "Notification" or "hold" points will be established by the Engineer, after contract award.

7.13.2 TVA acceptance of any material shall in no way relieve Contractor of any of his responsibility for meeting all requirements of the specification and shall not prevent subsequent rejection if such tanks and/or material are later found to be defective.

7.13.3 Contractor shall also furnish the Engineer test pieces and samples for independent analysis and test, if requested.

7.14 Field Tests

7.14.1 As soon as practicable after completion of the WORK under this specification, TVA may make at its own expense, such tests as it deems desirable to demonstrate tank compliance with the specification requirements and guarantees of the Contractor. If the results of the tests indicate that the tank does not meet the specified requirements and guaranteed performance, the Contactor shall at his expense make all necessary adjustments or changes to correct the performance. All subsequent tests until acceptance by the Engineer shall be made at the Contractor's expense, including shipping costs for return for shop repair and/or modifications.

7.14.2 Upon completion of erection, the tank shall be tested for water tightness by the Contractor. Any apparent leaks shall be repaired, and the tank shall be retested and made watertight.

7.14.3 TVA will furnish necessary suitable quality water for testing.

7.15 Construction

7.15.1 All vertical and horizontal shell joints shall be double-welded, full-penetration, and complete-fusion butt joints.

7.15.2 Shell-to-bottom joints shall be double-welded, full-fillet joints.

7.15.3 Bottom plates shall be single-welded, full-fillet lap joints.

7.15.4 All jobsite work activities shall be executed in accordance with the owners' safety program.

7.15.5 Before the start of erection, the contractor shall inspect the tank foundation to ensure that it is level and acceptable to receive work.

7.15.6 Construction of tanks shall conform to all State and Local codes that may govern and to the specific codes hereinafter referenced, except where more stringent requirements are specified herein.

7.15.7 For additional requirements, see 7.22.15.

7.16 Erection Conditions.

7.16.1 Contractor will be provided adequate access to the erection sites and space for storage of materials and tools. Any overhead wires or obstructions that interfere with erection will be removed. Fabrication of tank segments may be at a remote location and the completed segments moved to the foundation at the discretion of TVA.

7.16.2 For additional requirements, refer to 7.22.12.

7.17 Cleanup

Upon completion of erection, the Contractor shall remove and dispose of all his construction debris.

7.18 General Arrangement

The required characteristics and limiting conditions for the construction of the tanks are contained on the drawings shown in Appendix 9.3.

7.19 Ground Pads

Ground pads shall be provided in accordance with Appendix 9.5.

7.20 Design Life

The design lifetime of these tank(s) shall be 40 years of essentially maintenance-free operation except for normal inspection, cleaning, and replacement of wearing parts of active components.

7.21 Not Used

7.22 Specific Requirements for WBN TWST

7.22.1 This section covers the requirements for a field-erected Tritium Water Storage Tank (TWST) and secondary containment tank, complete with appurtenances and accessories at TVA's Watts Bar Nuclear Station. In addition, a shop fabricated overflow tank of approximately 1000 gallon capacity is to be furnished by the contractor.

7.22.2 The tank system shall consist of a stainless steel water storage tank (nominal capacity 500,000 gallons) within a full capacity carbon steel secondary containment tank, a 1000 gallon carbon steel overflow tank, pipe, valves and fittings as shown in Appendix 9.3. Sump pump and instrumentation will be supplied by others.

7.22.3 The new tank will be part of a tritium control program to which TVA has committed. The tank will store tritiated water that has been treated with the stations existing liquid radwaste processing system (LRPS) and a newly planned portable reverse osmosis/demineralizer system.

7.22.4 The TWST, overflow and secondary containment tanks shall be designed, constructed and tested in accordance with the applicable requirements of the API-650, and all additional requirements hereinafter specified.

a. The tanks shall be designed and constructed suitable for the respective design conditions as specified in the data sheet.

b. Contractor shall perform all calculations necessary to insure the integrity of each tank and he shall carefully check the design and provide proper plate thickness, reinforcement and supports as required for the service and to prevent deflection under the conditions for which the tank is intended.

c. The shells and bottoms of the tanks which are atmospheric vessels (0 psig) shall be designed to withstand an internal pressure equal to a column of water extending 10 feet above the top of the internal overflow level of the tank.

7.22.5 Tanks shall be furnished complete with all required nozzles, vents, bosses, drains, flanges, hinged covers with locking devices, manholes and access openings, gaskets and bolting, ladders, hand railing, platforms, stairs, inside piping with suitable supports, if required, and such braces, brackets, legs, etc., as required, including all other appurtenances shown on the drawings or called for in the Specification.

7.22.6 The allowable forces and moments which may be imposed on each of the tank's nozzles shall be provided to the Owner by the Contractor. The allowable forces and moments shall be provided for both the stainless steel water storage tank and the carbon steel secondary containment tank.

7.22.7 Classification

The TWST will interconnect to the Safety Class H (non seismic, non-safety related, augmented quality – Q09) portion of the Waste Disposal System. This equipment shall comply with the QA requirements of Regulatory Guide 1.143, Rev. 1 and API-650.

7.22.8 Tritiated Water Storage Tank (TWST)

a. The requirements of Regulatory Guide 1.143, "Design Guidance for Radioactive Waste Management Systems, Structures, and Components Installed in Light-Water-Cooled Nuclear Power Plants" Revision 1 apply to the TWST. The tank will be designed and constructed to the requirements of API 650. Pipe and valves shall be per ANSI B31.1. These standards are in accordance with the requirements of Table 1 of Reg. Guide 1.143. The tank foundation shall be in accordance with the requirements of API 650. Natural phenomena design criteria and load combinations shall be in accordance with Regulatory Guide 1.143, Revision 2.

b. The tank nominal capacity shall be approximately 500,000 gallons, and shall be approximately 45 feet in diameter with 45 feet tall cylindrical shell.

c. The stainless steel TWST tank shall consist of a cylindrical shell with a dome roof and flat bottom. The tank shall be an atmospheric tank in accordance with API 650 code requirements.

d. A bladder shall be provided by the contractor at the top to limit the release of tritium via evaporation to minimize the unmonitored release from the station.

e. A nitrogen connection shall be provided to initially vent air from under the bladder as the tank fills and later provide a nitrogen blanket inside the tank to facilitate movement of the bladder without damage.

f. The TWST shall include an overflow line piped to a stainless steel overflow tank (approximately 1000 gallon capacity). This design will prevent small spills from the overflow line from contaminating the area surrounding the tank, including the secondary containment.

g. The TWST tank overflow pipe will contain a loop seal filled with clean water to maintain Nitrogen gas within the TWST.

h. The tank shall have adequate venting and overflows. Air venting capacity shall equal or exceed the inflow or outflow capacity, whichever is larger. Overflow capacity shall exceed the inflow capacity.

i. The stainless steel water storage tank shall have two shell manholes and two roof manholes. The shell manholes shall be diametrically opposite. Manholes shall be 24 inches diameter.

j. The tank shall be furnished with nozzles and manways as shown in Appendix 9.3 as a minimum. If required to accommodate pipe thermal expansion and contraction, the water storage tank pipe nozzles may be rotated from the position shown in Appendix 9.3. The secondary containment tank nozzles shall remain in the location shown to accommodate Owners' pipe connection.

7.22.9 Secondary Containment

a. The water storage tank (TWST) and overflow tank shall be constructed within a larger diameter, open top carbon steel tank to provide full capacity secondary containment of the contents of the inner tank in the event of a leak or rupture of the inner tank.

b. The secondary containment tank will be approximately 55 feet in diameter to allow sufficient annular space between the inner and outer tank walls to accommodate construction, maintenance, and inspection activities.

c. The outer tank shall be constructed from Carbon Steel and painted per the requirements in this specification.

d. The bottom of the outer tank shall set on the concrete foundation. The inner tank shall set on the floor of the outer tank.

e. Because of dissimilar materials, an insulating barrier layer of material shall be provided between the inner stainless steel tank bottom and the outer carbon steel tank. The carbon steel tank floor shall be painted and inspected per this specification prior to installing the insulating layer.

f. A rain hood of metal construction, over the annular space, shall be provided to minimize rain water / snow accumulation in the secondary containment. The rain hood shall be provided with a rain proof, hinged door / hatch to provide entry into the annular space via the stairs.

g. The carbon steel secondary containment tank shall have two shell manholes. The shell manholes shall be diametrically opposite. Manholes shall be 24 inches diameter.

h. The secondary containment shall include a sump to collect liquid accumulating in the annular space. The sump shall be approximately 2 feet by 2 feet by 1 foot deep and shall be covered with bar grating such that the top of the grating is flush with the tank floor.

i. The annular space of the secondary containment tank shall be sloped downward towards the perimeter. The slope shall be 1 inch rise per 10 feet run.

j. An access stairway shall be provided on the exterior and interior of the secondary containment tank to allow personnel access to the annulus space.

k. All openings in the secondary containment tank to atmosphere (including vents and gaps between the rain hood and tank wall) shall be fitted with bird screens.

l. The secondary containment tank shall be provided with nozzles and manways as shown in Appendix 9.3 as a minimum. If required to accommodate pipe thermal expansion and contraction, the water storage tank pipe nozzles may be rotated from the position shown in Appendix 9.3. The secondary containment tank nozzles shall remain in the location shown to accommodate Owners' pipe connection.

m. The Owner intends to install permanent lighting inside the secondary containment and a level switch in the sump. Contractor shall provide clip angles or other suitable device for supporting conduit and light fixtures, as described in 7.22.10.

APPENDIX 9.3 TANK SKETCHES:

1. Location
2. Outline
3. Nozzle Schedule

SPECIFICATION N3M-947, Rev. 0
TANK LOCATION DRAWING

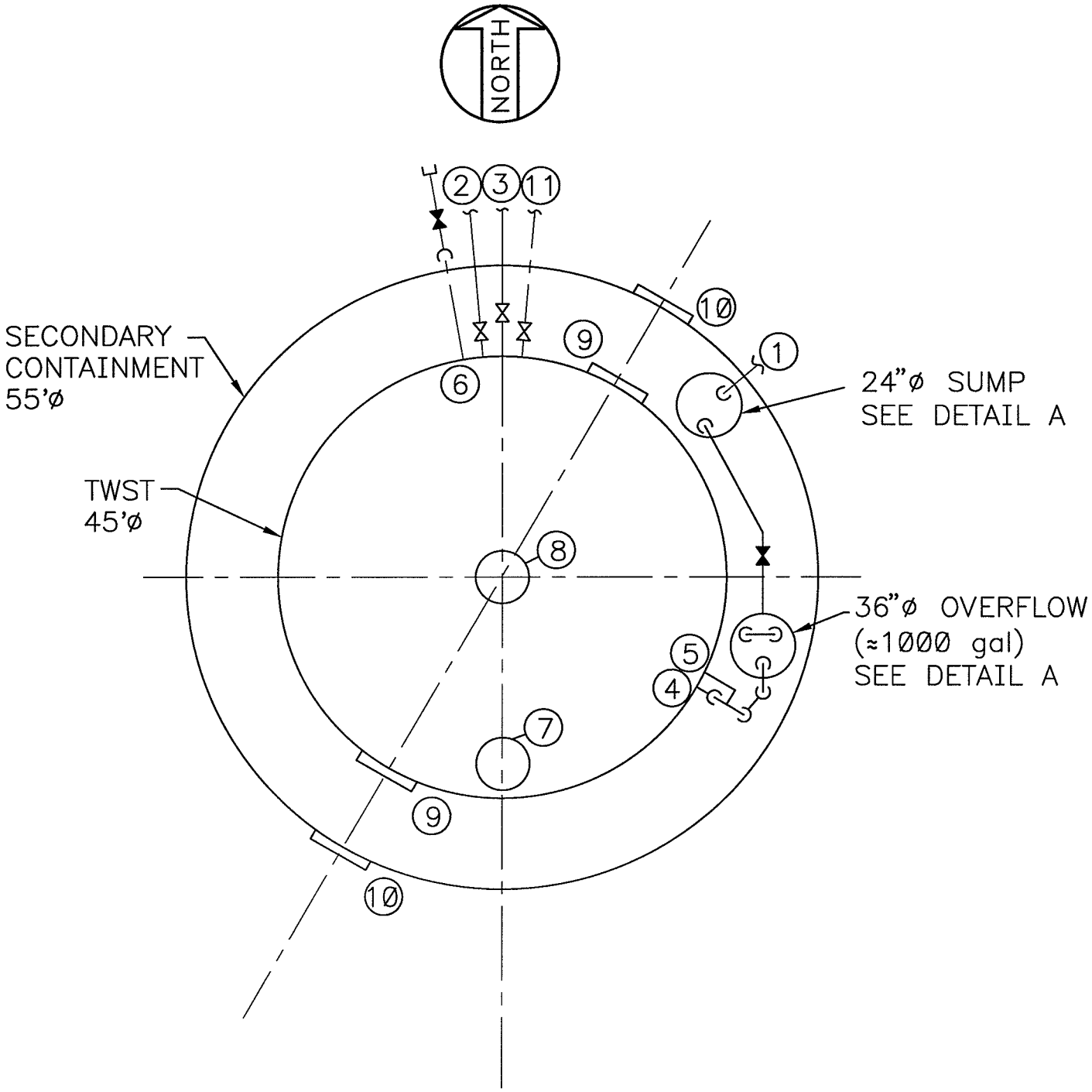
NORTH
2
3
11
10
9
1
6
SECONDARY
CONTAINMENT
55'ø
24"ø SUMP
SEE DETAIL A
TWST
45'ø
8
36"ø OVERFLOW
(≈1000 gal)
SEE DETAIL A
5
4
7
9
10

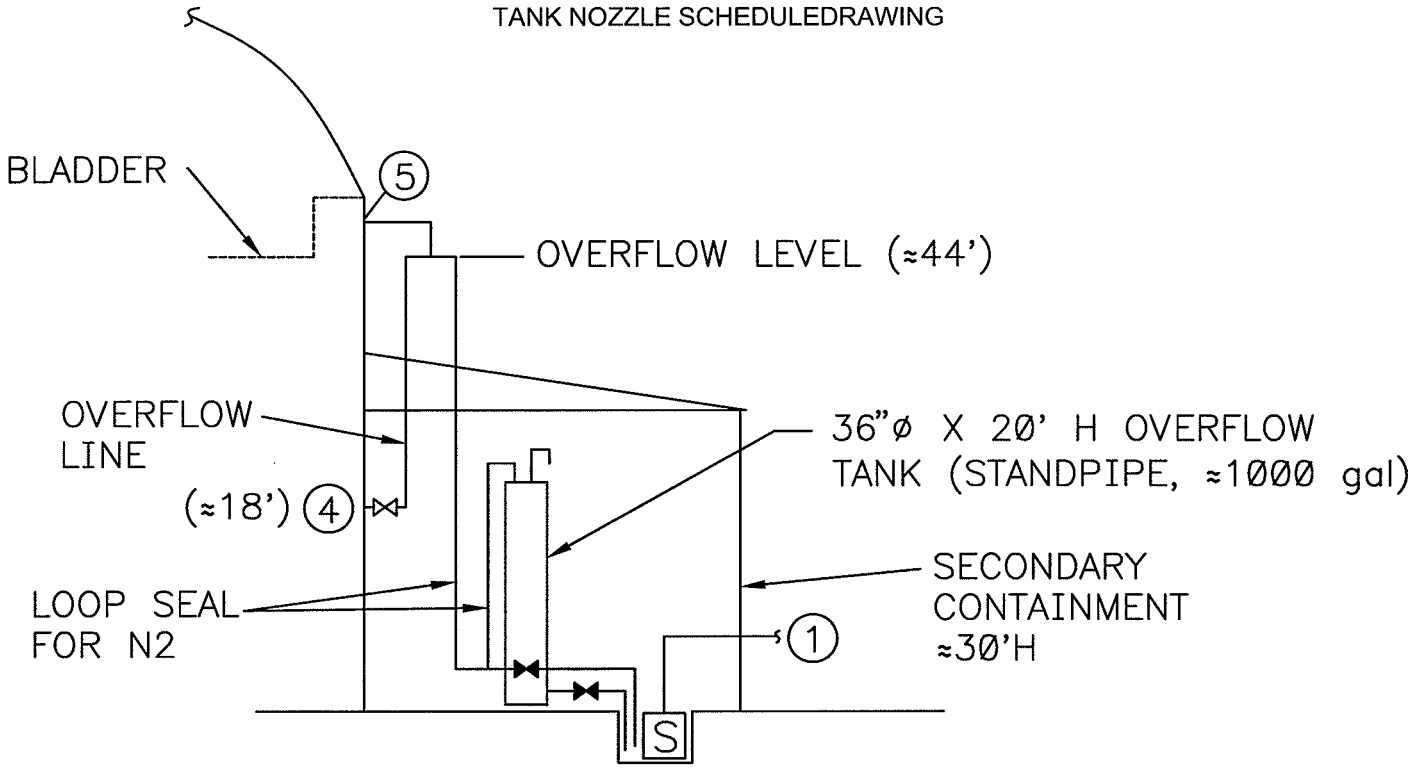

DETAIL A–A

NOZZLE SCHEDULE

ITEM #	QTY	SIZE	ELEVATION ABOVE BOT	DESCRIPTION
1	1	4"	2'–0"	SUMP PUMP DISCHARGE
2	1	6"	1'–6"	FILL LINE
3	1	6"	1'–6"	DISCHARGE LINE
4	1	6"	18'–0"	OVERFLOW LINE
5	1	2"	≈44'	OVERFLOW VENT
6	1	1"	≈44'	N2 SUPPLY
7	1	24"	ROOF	TWST ROOF MANWAY
8	1	24"	ROOF	TWST ROOF MANWAY/VENT
9	2	24"	2'–6"	TWST SHELL MANWAY
10	2	24"	2'–6"	SHELL MANWAY
11	1	2"	0'–6"	LEVEL INSTRUMENT CONN.

Appendix9.4 Tank Data Sheet

API STANDARD 650
STORAGE TANK
DATA SHEET

DATE August 25, 2011
BY
FILE NO. Specification N3M-947, Rev. 0, Appendix 9.4
PAGE 1 OF 3

APPURTENANCES (TO BE COMPLETED BY MANUFACTURER AND/OR PURCHASER

1. PURCHASER/AGENT Tennesse Valley Authority
ADDRESS
CITY PROV/STATE PC/ZIP PHONE
2. USER Watts Bar Nuclear Station
3. ERECTION SITE: NAME OF PLANT Watts Bar Nuclear Station
LOCATION Spring City, TN
4. TANK NO. TWST NOMINAL CAPACITY 500,000 gal m^3 (bbl) NET WORKING CAPACITY by vendor m^3 (bbl)
PUMPING RATES: IN 300 gpm m^3/h (bbl/h) OUT 300 gpm m^3 /h(bbl/h)
6. MAXIMUM OPERATING TEMPERATURE 108 F (1) °C (°F)
7. PRODUCT STORED: Tritiated Water (H3O) DESIGN SPECIFIC GRAVITY 1.0 AT 60 F °C (°F)
DESIGN METAL TEMPERATURE -20 F (1); 180 F (6) °C (°F) VAPOR PRESSURE kPa (in. water)
8. CORROSION ALLOWANCE: SHELL mm(in.) ROOF mm (in.)
BOTTOM mm(in.) STRUCTURALS mm (in.)
9. SHELL DESIGN: ☐ BASIC STANDARD 650 ☐ APPENDIX A ☐ APPENDIX F
DESIGN PRESSURE kPa (lbf/in.^{2})
10. ROOF DESIGN: ☐ BASIC STANDARD 650 ☐ APPENDIX C (EXTERNAL FLOATING)
☐ APPENDIX G (ALUMINUM DOME) ☐ APPENDIX H (INTERNAL FLOATING)
FRANGIBLE ROOF JOINT? ☐ YES ☐ NO ☐ NOTE FOR SHOP TANKS
11. ROOF DESIGN INFORMATION:
UNIFORM LIVE LOAD kPa (lbf/in.^{2})
SPECIAL LOADS (PROVIDE) SKETCH) kPa (lbf/in.^{2})
INSULATION LOAD kPa (lbf/in.^{2})
MAXIMUM DESIGN ROOF TEMPERATURE °C (°F)
GASES IN THE VAPOR SPACE Nitrogen under bladder
12. EARTHQUAKE DESIGN? ☑ YES ☐ NO (APPENDIX B) ROOF TIE RODS (3,10,4,5)? ☐ YES ☐ NO
SEISMIC ZONE ASCE 7-95, Cat III IMPORTANCE FACTOR 1
ZONE FACTOR (TABLE E-2) SITE COEFFICIENT (TABLE E-3)
13. WIND LOAD: VELOCITY ASCE 7-95, Cat III km/h (mph)
PROVIDE INTERMEDIATE WIND GIRDER (3.9.7)? ☐ YES ☐ NO
14. ENVIRONMENTAL EFFECTS: MAXIMUM RAINFALL 5.3 inches in 24 hrs (2) mm/h (in./h)
TOTAL SNOW ACCUMULATION 18.2 inches in 24 hrs (3) mm (in.)
15. SIZE RESTRICTIONS MAXIMUM DIAMETER m (ft) MAXIMUM HEIGHT m (ft)
16. FOUNDATION TYPE: ☐ EARTH ☐ CONCRETE RINGWALL ☑ OTHER Concrete Slab
REMARKS
(1) Extreme max and min environmental temperatures per WBN UFSAR 2.3.2.2.
(2) Design temperature data for Waste Disposal System, per Drawing 1-47W830-1, R. 35
(3) Per WBN UFSAR Table 2.3-4
(4) Per WBN UFSAR Table 2.3-6

API STANDARD 650
STORAGE TANK
DATA SHEET

DATE August 25, 2011
BY
FILE NO. Specification N3M-947, Rev. 0, Appendix 9.4

PAGE 2 OF 3

CONSTRUCTION DETAILS (TO BE COMPLETED BY MANUFACTURER AND/OR PURCHASER

1. MANUFACTURER
ADDRESS
CITY PROV/STATE PC/ZIP PHONE
SERIAL NO.
2. FABRICATOR
ADDRESS
CITY PROV/STATE PC/ZIP PHONE
SERIAL NO.
3. MATERIAL SPECIFICATIONS SHELL
ROOF
BOTTOM
STRUCTURALS
4. NO. OF SHELL COURSES
5. PLATE WIDTHS AND THICKNESSES (INCLUDING CORROSION ALLOWANCE), IN mm (in.)
1. 4. 7.
2. 5. 8.
3. 6. 9.
6. TANK BOTTOM: PLATE THICKNESS mm(in.) ☐ LAP ☐ BUTT SEAMS
SLOPE mm/m (in/ft) ☐ TO ☐ FROM CENTER
7. MINIMUM WIDTH AND THICKNESS OF BOTTOM ANNULAR PLATES (3.5) IN mm (in.):
8. ROOF-TO-SHELL DETAIL (FIGURE F-1)
9. INTERMEDIATE WIND GIRDER? ☐ YES ☐ NO TOP WIND GIRDER FOR USE AS WALKWAY? ☐ YES ☐ NO
10. ROOF TYPE: ☐ SUPPORTED ☐ SELF-SUPPORTED ☐ FLOATING
SLOPE OR RADIUS mm (in.)
11. ROOF PLATE: THICKNESS mm ☐ LAP ☐ BUTT ☐ JOINT
12. PAINT:
SHELL-- EXTERIOR? ☐ YES ☐ NO INTERIOR? ☐ YES ☐ NO
SURFACE PREPARATION
BOTTOM-- UNDERSIDE? ☐ YES ☐ NO INTERIOR? ☐ YES ☐ NO
SURFACE PREPARATION
STRUCTURAL STEEL-- EXTERIOR? ☐ YES ☐ NO INTERIOR? ☐ YES ☐ NO
SPECIFICATION
13. TANK BOTTOM COATING: INTERIOR? ☐ YES ☐ NO MATERIAL
APPLICATION SPECIFICATION
14. INSPECTION BY: SHOP FIELD
15. WELD EXAMINATION: RADIOGRAPH
SUPPLIEMENTARY LIQUID PENETRANT OR ULTRASONIC
16. FILMS PROPERTY OF
17. LEAK TESTING: BOTTOM ROOF
SHELL
18. MILL TEST REPORTS: REQUIRED? ☐ YES ☐ NO
PLATE STRUCTURAL SHAPES
19. PURCHASER'S REFERENCE DRAWING
20. TANK SIZE: DIAMETER m (ft) HEIGHT m (ft)
21. DATE OF STANDARD 650
REMARKS

API STANDARD 650
STORAGE TANK
DATA SHEET

DATE August 25, 2011
BY
FILE NO. Specification N3M-947, Rev. 0, Appendix 9.4

PAGE 3 OF 3

APPURTENANCES (TO BE COMPLETED BY MANUFACTURER AND/OR PURCHASER

1. STAIRWAY STYLE: ☑ CIRCULAR ☐ STRAIGHT ANGLE TO HORIZONTAL _____ DEGREES
LADDER see 7.9 and 7.22.9.j
2. WALKWAY: WIDTH _____ mm (in.) LENGTH _____ m (ft)
3. DRAWOFF SUMP: STANDARD 2 ft x 2 ft x 12 in deep SPECIAL _____
4. BOLTED DOOR SHEET? ☐ YES ☐ NO (APPENDIS a TANKS ONLY) ☐ RAISED ☐ FLUSH
5. SCAFFOLD HITCH _____
6. INTERNAL PIPING: SWING LINE _____ SUCTION LINE _____
HEATING COIL SURFACE AREA _____ m^2 (ft^2)
7. ROOF DRAIN: HOSE _____ JOINTED _____
SIPHON _____
8. NO. AND SIZE OF SHELL MANHOLES 2 - 24" dia (See 7.22.8.i and 7.22.9.l)
9. NO. AND SIZE OF ROOF MANHOLES See 7.22.8.i and 7.22.9.l
10. SHELL NOZZLES (SEE FIGURES 3-4B, 3-5, AND 3-7 AND TABLES 3-8, 3-9, AND 3-10):

MARK	SIZE	FLANGED			THREADED					ORIENTATION N=0	HEIGHT FROM BOTTOM	SERVICE
		SGL	DBL	SPL	A	B	C	D	E			
See Appendix 9.3												

11. ROOF NOZZLES, INCLUDING VENTING CONNECTION (SEE FIGURES 3-14 AND 3-15 AND TABLES 3-16 AND 3-17

MARK	SIZE	FLANGED		THREADED	REINFORCEMENT	ORIENTATION N=0	DISTANCE FROM CENTER	SERVICE
See Appendix 9.3								

NOTE: SKETCHES AND/OR SEPARATE SHEETS MAY BE ATTACHED TO COVER SPECIAL REQUIREMENTS.

Appendix 9.5

TVA Ground Pad Details (Specification G-47, Appendix A4)