National Nuclear Security Administration

United States Department of Energy

Office of Defense Nuclear Nonproliferation

NEPA Source Document

for

Pit Disassembly and Conversion (PDC) Project

Line Item Project No. 99-D-141-01
Document No. SRB-25.02-12-0001, Revision: 1
Date: June 18, 2012

Prepared for U.S. Department of Energy By:
Savannah River Nuclear Solutions, LLC, Contract No. DE-AC09-08SR22470
URS, Contract No. DE-AC02-99CH10903

UNCLASSIFIED
DOES NOT CONTAIN UNCLASSIFIED CONTROLLED NUCLEAR INFORMATION

DC & Reviewing Official: *C.M. Pascua / URS-PDC*

Date: 06/18/2012 CMPascua

United States Department of Energy

National Nuclear Security Administration

Office of Defense Nuclear Nonproliferation

PROJECT TEAM ENDORSEMENTS AND APPROVAL

Prepared by: _____ Date: 6-18-2012
Randy Reddick
Environmental Lead

Prepared by: _____ Date: 06/18/2012
Steven Maheras
Discipline Engineer

Concurrence by: _____ Date: 6/18/2012
Bill Richmond
ES&H Manager

Concurrence by: _____ Date: 6/20/2012
James McEntire
Facility Design Manager

SUMMARY OF REVISIONS

Revision	Date	Description of Revision
0	04/25/12	Initial Issue
1	06/18/2012	Changed leak path factor for beyond design basis accidents to more conservative value. Minor document edits.

TABLE OF CONTENTS

1.0 INTRODUCTION 8
2.0 PROPOSED ACTION AND ALTERNATIVES 9
2.1 Introduction 9
2.2 Pit Disassembly and Conversion Facility (PDCF) 10
2.3 Non-Pit Plutonium 39
2.4 PDC Project 51
3.0 ENVIRONMENTAL IMPACTS 90
3.1 Nonradiological Impacts from Routine Construction and Operations 90
3.2 Radiological Impacts from Facility Accidents 93
3.3 Nonradiological Impacts from Facility Accidents 106
3.4 Occupational Radiation Doses 108
3.5 Shipments of Plutonium Oxide Product, Plutonium Pits and Clean Metal, HEU, and Byproduct Material 109
3.6 TRU Waste Volumes and Shipments 110
4.0 REFERENCES 115
5.0 PDC PROJECT ACRONYMS, ABBREVIATIONS, UNITS, AND CHEMICAL SYMBOLS 120
5.1 Acronyms 120
5.2 Abbreviations 122
5.2 Units and Chemical Symbols 122

LIST OF TABLES

Table 2.2-1: PDCF Construction Resource Quantities[a] 13
Table 2.2-2: Approximate Site Employment for PDCF Construction 14
Table 2.2-3: Estimated Average Waste Generation for PDCF Construction 14
Table 2.2-4: PDCF Construction Equipment 18
Table 2.2-5: PDCF Construction Emissions 20
Table 2.2-6: Estimated PDCF Waste Volumes 35
Table 2.2-7: PDCF Project Diesel Generator Emissions 36
Table 2.2-8: Utility Requirements 37
Table 2.2-9: Resource Requirements 37
Table 2.3-1: Estimated Non-Pit Plutonium Site Work Force 39
Table 2.3-2: Non-Pit Plutonium Processing Construction Equipment 41
Table 2.3-3: Non-Pit Plutonium Processing Construction Emissions 42
Table 2.3-4: Estimated Average Volumes of Construction Solid Waste 44
Table 2.3-5: Non-Pit Plutonium Processing Diesel Generator Emissions 52
Table 2.3-6: F/H Laboratory Emissions 53
Table 2.4-1: Locations and Sizes of PDC Project Buildings 61
Table 2.4-2: PDC Project Onsite Construction Work Force 68
Table 2.4-3: PDC Project Construction Equipment 69
Table 2.4-4: K-Area Construction Emissions (MT/year) 72
Table 2.4-5: PDC Average Construction Waste Generation Rates 75
Table 2.4-6: Utilities and Resources Required 76
Table 2.4-7: Normal Operations Radionuclide Releases 80
Table 2.4-8: Projected Emissions from PDC Operations 81
Table 2.4-9: Estimated Emissions from the F/H Laboratory 82
Table 2.4-10: PDC Project Liquid Waste Disposal Pathways 84
Table 2.4-11: PDC TRU Waste Disposition Pathway 84
Table 2.4-12: Utility Requirements 85
Table 2.4-13: Resource Requirements 85
Table 2.4-14: Gases Used in Processes 86
Table 2.4-15: Hazardous Chemical Inventories in PDCF 87
Table 2.4-16: Chemicals Delivered for Use in the PDCF 89
Table 3.1-1: Construction Emissions Maximum Ground-level Concentrations 92
Table 3.1-2: Operating Emissions Maximum Ground-level Concentrations 92
Table 3.2-1: Container Types, Release Mechanisms, ARFs, and RFs 95

Table 3.2-2: Nominal WG Plutonium Isotopic Composition 95
Table 3.2-3: Nominal KIS Plutonium Isotopic Composition 96
Table 3.2-4: Nominal HEU Isotopic Composition 96
Table 3.2-5: Additional Radionuclides Analyzed 96
Table 3.2-6: Pu-239 (Y) Dose Equivalent Gram and Kilogram Conversion Factors 96
Table 3.2-7: MAR and Releases for K-Area Accidents 98
Table 3.2-8: Criticality Source Term 100
Table 3.2-9: MAR and Releases for F-Area Accidents 103
Table 3.3-1: Chemicals Used in the Chemical Injection System and the HVAC Chilled Water System 107
Table 3.3-2: Results of Chemical Screening Analysis 108
Table 3.4-1: Occupational Radiation Doses for Operations at the PDCF at F-Area and Pit Operations at K-Area 109
Table 3.5-1: Shipments of Plutonium Oxide Product, Plutonium Pits and Clean Metal, HEU, and Byproduct Material 110
Table 3.6-1: TRU Waste Volumes and Shipments to WIPP 111
Table 3.6-2: FGE and Decay Heat Per Gram of Material for Nominal WG Plutonium Isotopic Composition 112
Table 3.6-3: FGE and Decay Heat Per Gram of Material for Nominal KIS Plutonium Isotopic Composition 112

LIST OF FIGURES

Figure 2.2-1: Overall PDCF Facilities Site Plan 10
Figure 2.2-2: Fan House and Exhaust Stack General Layout 25
Figure 2.2-3: Layout of PDCF Processes 29
Figure 2.2-4: PDCF Stormwater Retention Basins 38
Figure 2.3-1: Non-Pit Plutonium HVAC Airflow 49
Figure 2.4-1: Main Processing Building at K-Area 54
Figure 2.4-2: HVAC System for all PDC Airflow 58
Figure 2.4-3: Eastern Portion of K-Area 62
Figure 2.4-4: Southern Portion of K-Area 64

1.0 INTRODUCTION

This National Environmental Policy Act (NEPA) Source Document characterizes the Proposed Action and some alternatives under consideration for the disposition of surplus plutonium at the U.S. Department of Energy (DOE) Savannah River Site (SRS), Aiken, South Carolina. This document is intended for use by DOE and its contractor in preparing the *Surplus Plutonium Disposition Supplemental Environmental Impact Statement* (hereinafter referred to as the SPD Supplemental EIS) (DOE/EIS–0283–S2)[1] and is meant to be reflective of the Pit Disassembly and Conversion Facility (PDCF) design as well as two Pit Disassembly and Conversion (PDC) Project conceptual designs.

As explained in more detail in Chapter 2.0, the scope of this source document is limited to the characterization of the following designs: 1) PDCF (Reference 4.1) and 2) PDC Project as characterized by processing of pit and non-pit plutonium (Reference 4.2). The term non-pit plutonium processing is used in this document to describe material referred to as Alternate Feedstock (AFS)-2. The environmental impacts of processing AFS-2 material is evaluated in this document. Other related projects that are not part of the PDC mission are:

- Container Surveillance and Storage Capability (CSSC) Project (Reference 4.3)
- K-Area Interim Surveillance (KIS) Project (Reference 4.3)
- Plutonium Preparation Project (PuP) materials are identified by the 5 Metric Ton (MT) Study [Reference 4.4]) are not currently part of the PDC scope. These materials are not included in the assessment of impacts in this document.

This document does not analyze new alternatives identified by DOE in amended Notice of Intent (NOI) and published in the Federal Register, January 12, 2012 (Reference 4.5). The environmental impacts of the new alternatives at K-Area as published in the amended NOI are bounded by the K-Area environmental impacts described in this document.

Chapter 3.0 of this document provides impact modeling results and analyses for facility accidents and routine radiological emissions. Potential facility accidents were developed and exposures to offsite individuals were calculated. Each process was evaluated, and the radiological impacts to the public are presented.

Chapter 4.0 of this document lists references cited in this NEPA Source Document. This document utilized a number of key project source documents, as well as design information and project knowledge available as of January 2012. Because of the dynamic state of project design, the project characterization information provided in this NEPA Source Document may differ from the information contained in the references. For purposes of the SPD Supplemental EIS, it is recommended that this NEPA Source Document (not the original documents listed in Chapter 4.0) be cited as the reference.

[1] The SPD Supplemental EIS is expected to be published in 2013.

2.0 PROPOSED ACTION AND ALTERNATIVES

2.1 Introduction

As described in the NOI published in the Federal Register on July 19, 2010 (Reference 4.6), DOE proposes to analyze the alternative to install the capability in K–Area at SRS to, among other things, disassemble nuclear weapons pits (a weapons component) and convert the plutonium metal to an oxide form for fabrication into mixed uranium-plutonium oxide (MOX) reactor fuel in the Mixed Oxide Fuel Fabrication Facility (MFFF). Under this alternative, DOE would not build the Pit Disassembly and Conversion Facility (PDCF), which DOE previously decided to construct. The K–Area project also would provide capabilities needed to prepare non-pit plutonium for other disposition alternatives evaluated in the SPD Supplemental EIS and to support the ongoing plutonium storage mission in K-Area. DOE also proposes to evaluate an alternative to dispose of some surplus non-pit plutonium as transuranic (TRU) waste at the Waste Isolation Pilot Plant (WIPP) in New Mexico, provided the plutonium would meet the criteria for such disposal.

As described in the NOI, the actions pertaining to F-Area or K-Area which DOE proposes to evaluate in the SPD Supplemental EIS are summarized below. These actions and the subsequent information provided throughout this document have received varying levels of design maturity of which the information provided is based.

- PDCF—Under the No Action Alternative and specific to F-Area, DOE would construct and operate a stand-alone PDCF in F-Area at SRS to convert 27.5 MT of plutonium pits and other clean plutonium metal to an oxide form suitable for feed to the MFFF, as described in the 1999 *Surplus Plutonium Disposition Final Environmental Impact Statement* (hereinafter referred to as the SPD EIS) (Reference 4.7) and consistent with DOE's decision announced in the 2000 Record of Decision (ROD) for that EIS (Reference 4.1). The assumed processing rate for PDCF is 3.5 MT per year and the design includes a sand filter.
- Non-Pit Processing—DOE would operate the processing equipment required to prepare the non-pit plutonium (AFS-2) materials for disposition as MOX fuel provided it meets MFFF specifications. The SPD Supplemental EIS will evaluate other disposition options if MFFF specifications are not met. The processing of AFS-2 material is assumed to occur in the existing 105-K building.
- Pit Processing—DOE would install and operate the equipment in K-Area at SRS necessary to perform the functions of the PDCF. An additional 7.1 MT of excess plutonium pits and other clean plutonium metal would be added to the pit processing inventory. The assumed processing rate for PDCF is 3.5 MT per year.

In May 2011, DOE decided to perform an alternatives analysis for executing the pit disassembly and conversion mission to identify cost savings while still meeting mission needs. Six alternatives were identified for evaluation by DOE.

This NEPA Source Document characterizes the construction and operation of the PDCF (Section 2.2), Non-Pit Plutonium (Section 2.3), and PDC Project (Section 2.4). Chapter 3.0 characterizes the impacts of those activities and of the associated facility accidents.

2.2 Pit Disassembly and Conversion Facility (PDCF)

DOE would construct and operate a stand-alone PDCF facility in F–Area at SRS to convert plutonium pits and other clean plutonium metal to an oxide form suitable for feed to the MFFF, as described in the SPD EIS (Reference 4.7) and consistent with DOE's decision announced in the 2000 ROD for that EIS (Reference 4.1). The facility site plan is shown on Figure 2.2-1.

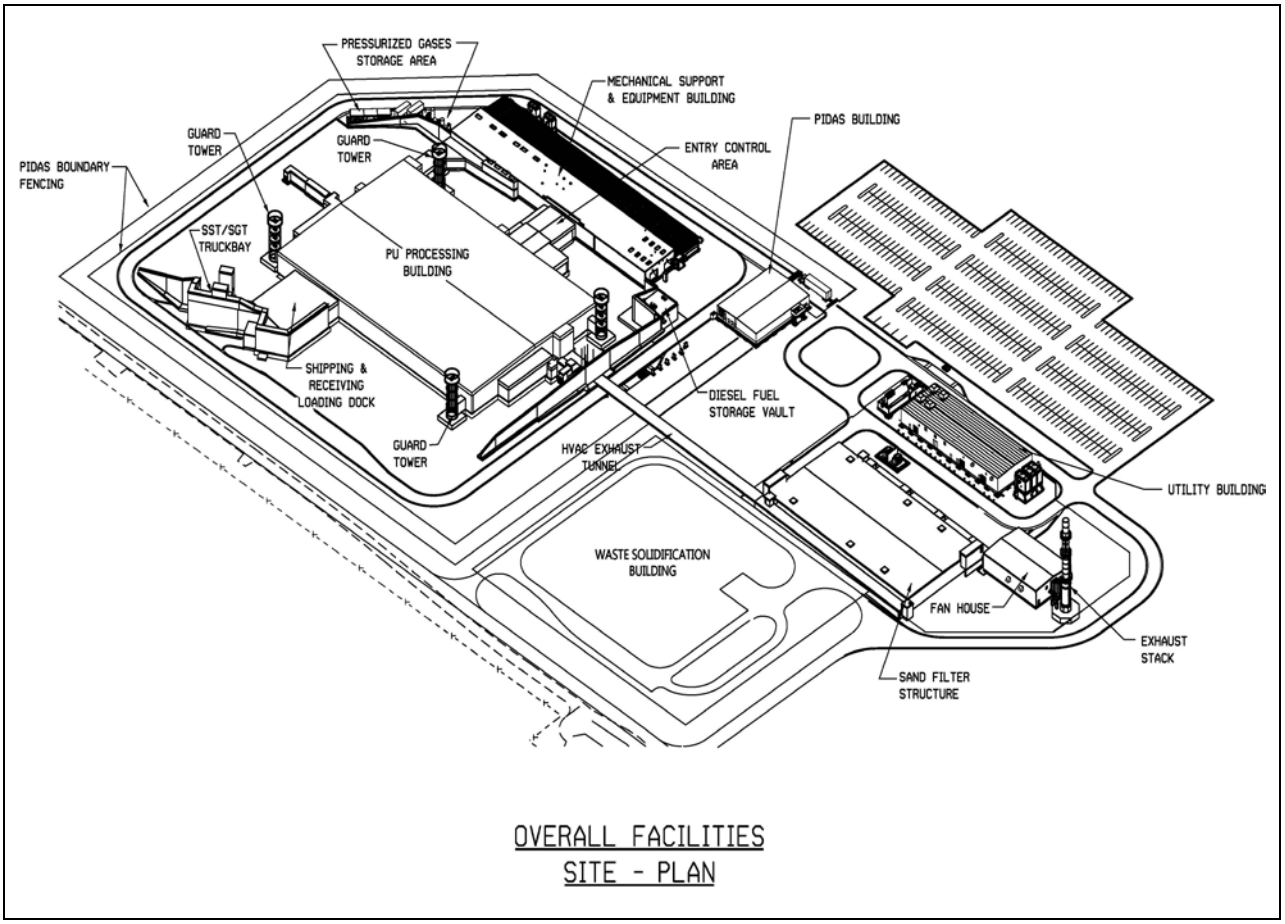

Source: Reference 4.8, Chapter 2.0.

Figure 2.2-1: Overall PDCF Facilities Site Plan

The primary mission of the PDCF would be to:

- Receive surplus weapons plutonium in the form of pits and other clean plutonium metals
- Convert the plutonium metal to plutonium oxide
- Remove residual classified attributes from (i.e., sanitize) the converted plutonium oxide
- Declassify non-plutonium materials and remove plutonium contamination from highly enriched uranium (HEU)

Once the plutonium oxide is sanitized, it would be made available for MOX fuel, which would be used in one or both of the Tennessee Valley Authority's existing commercial nuclear power reactors.

2.2.1 Construction

The PDCF would be built in F-Area on 50 acres of land that has not been previously built upon but which was cleared of forest in the past and is now semi-disturbed grassland (Reference 4.9). Land area requirements for PDCF construction are estimated to be approximately two acres. Land area requirements for construction are generally associated with laydown area (including spoils, topsoils, etc) and haul routes that would be converted to new access roads after construction. Construction forces would utilize existing laydown areas for a majority of their work but would also designate a laydown area within the site to improve work efficiency.

2.2.1.1 Construction Activities

Construction activities for PDCF facilities would be as follows (Reference 4.10):

1. Mobilization and site preparation: The establishment of both local and remote field office complexes, receiving and laydown areas, heavy equipment staging and maintenance areas, shops, general parking areas, site access turnoffs and roadways, fencing, temporary electrical services, and any other support infrastructure activities necessary to initiate and sustain the start of construction.
2. Earthwork: The excavation from designated borrow areas, transport, and subsequent placement and compaction of common fill on the PDCF site footprint in order to achieve design grade configuration. Earthwork would also include the (over)excavation of the common Plutonium (Pu) Processing Building and Mechanical and Support Equipment Building (M&SEB) excavation footprint and the Pu Processing Building exhaust tunnel footprint. It also would include the placement and compaction of all required common and structural fill as specified for the noted excavated areas.
3. Shoring: The procurement and installation of all shoring systems to be located between the Waste Solidification Building (WSB) battery limits and the PDCF.
4. Site preservation: The construction or installation of erosion control measures and the placement as necessary of emulsified asphalt or concrete mud-mats in order to maintain the integrity of excavated slopes and grades.

Defined permanent plant installation and concrete placement activities (Critical Decision [CD-3B]) would include the following:

1. Placement of concrete mud-mats as required.
2. Placement of the Pu Processing Building Firewater Containment Basin (FWCB) Pump Pit base slab, walls, and columns.
3. Installation of any captured tanks or equipment.
4. Placement of the Pu Processing Building FWCB base slab and columns.
5. Installation and placement of the electrical ductbank.

6. Placement of the Pu Processing Building vertical south ventilation shaft; the lower portion upward through the interface with the horizontal exhaust tunnel to the Sand Filter.
7. Placement of the access stairwell to the south end of the FWCB.
8. Placement of the Pu Processing Building exhaust tunnel southward.
9. Fabrication and installation of structural security features within the exhaust tunnel.
10. Installation of electrical ground grids and ground rods as required.
11. Install underground utilities.
12. Procurement of reinforcing steel, associated support or embedment steel, formwork, security features, and tanks as necessary for the initial concrete placement scopes. Procurement of commodities and equipment for other systems or subsystems whose installation may be necessary to support the defined concrete placements of CD-3 or whose delivery lead time could impinge on the schedule critical path.
13. Procurement of the balance of equipment and services as necessary. Procurement of Unclassified and Classified Data Acquisition & Control System hardware and software licenses. Procurement of Unclassified and Classified Business & Logistics Systems hardware and software licenses. Procurement of Development and Simulation hardware and software licenses. Procurement of the balance of computing systems hardware and software licenses within the Systems Integrators scope.

The project would then pursue authorization to initiate all construction and procurement activities (CD-3) as defined in the approved Project baseline schedule and cost estimate.

2.2.1.2 Construction Management

2.2.1.2.1 Anticipated Resource Requirements

The anticipated resources that would be required for PDCF construction are shown in Table 2.2-1.

2.2.1.2.2 Anticipated Employment Requirements

Table 2.2-2 lists the anticipated employment requirements for PDCF construction. The employment numbers are approximate and include construction laborers, construction management (including superintendents and field engineers), and the engineering design team that would be located onsite. The PDCF estimate was based on one shift per day working 10-hour (hr) days, five days per week as the standard work week.

2.2.1.2.3 Construction Waste Estimates

Table 2.2-3 shows waste types expected to be generated during PDCF construction, estimated volumes of those wastes, and the proposed disposition for each type of waste.

Table 2.2-1: PDCF Construction Resource Quantities[a]

Item	Pu Processing Building	PDCF Total
Cement (tons)	19,000	28,000,
Reinforcing Steel (tons)	15,000	21,000
Conduit (linear feet)	213,000	519,000
Cable Tray (linear feet)	11,000	17,000
Power/Control Cable (linear feet)	2,241,000	2,917,000
Piping (linear feet)	55,000	98,000
Facilities (square feet)	126,000	280,000
Ductwork (pounds)	295,000	359,000
Formwork (square feet)	766,000	1,273,000
Sand, Conc. Aggregate (cubic yards)	21,522	30,750
Sand, Asphalt (cubic yards)	2,565	6,248
Sand, Pipe Bedding (cubic yards)	0	11,148
Sand, Filter Media (cubic yards)	0	13,900
Total Sand (cubic yards)	21,522	62,046
Gravel, Conc. Aggregate (cubic yards)	12,913	18,450
Gravel, Asphalt (cubic yards)	1,539	3,748
Gravel, Crushed Stone (cubic yards)	0	23,160
Total Gravel (cubic yards)	14,452	45,358
Rock/Riprap (cubic yards)	0	7,687
Recycled Rubble (Concrete) (cubic yards)	0	24,250
Soil – Fill material (cubic yards)		128,000[b]
Average Annual Water Usage (liters)	-	9,990,000
Annual Diesel Fuel Usage (gallons)	-	266,000[c]
Electricity (Megawatt hours) (Total use for nine year construction period)	-	106,800[d]

Sources:

a. Reference 4.11, Reference 4.12 unless otherwise indicated.
b. Reference 4.13.
c. Reference 4.14. Peak year diesel usage is estimated at 391,000 gallons and total diesel fuel usage equals 2,400,000 gallons.
d. Reference 4.15.

Table 2.2-2: Approximate Site Employment for PDCF Construction

Year	Construction Craft Workers	Construction Management	Design Team	Total
1	150	45	150	345
2	183	55	200	438
3	227	68	200	495
4	310	93	250	653
5	363	109	250	722
6	400	120	200	720
7	377	113	200	690
8	347	104	200	651
9	283	85	150	518
10	217	65	100	382
11	0	0	50	50

Source: Reference 4.16.
Note: Employment numbers estimated based on PDC data, with Construction Management estimated to be 30 percent of Construction.

Table 2.2-3: Estimated Average Waste Generation for PDCF Construction

Waste Type	Estimated Volume	Proposed Disposition
Liquid and Solid Hazardous	176 ft^3/year	Hazardous Waste Storage Facility
Solid Nonhazardous	4,200 ft^3/year	Three Rivers Regional Landfill
Liquid Nonhazardous	400,000 gallons (gal)/year	Central Sanitary Waste Treatment Facility or taken offsite in portable toilets

Source: Reference 4.17.
Note: ft^3/year = cubic feet per year.

2.2.1.2.4 Construction Emission Estimates

Estimates for emissions from construction used the same methodology for each of the three major sections of this chapter: “Pit Disassembly and Conversion Facility (PDCF)” (Section 2.2), “Non-Pit Plutonium” (Section 2.3), and “PDC Project” (Section 2.4) (Reference 4.14). This section describes that methodology.

Emissions from construction activities were estimated for three emission sources: (1) construction equipment exhaust, (2) motor vehicle use, and (3) fugitive dust emissions from construction activities and motor vehicle travel. Construction equipment and motor vehicle exhaust includes emissions of carbon monoxide (CO), nitrogen oxides (NO_x), volatile organic compounds (VOCs), sulfur dioxide (SO_2), particulate matter (PM), and greenhouse gases (carbon dioxide and methane). Fugitive dust emissions include PM emissions generated during earthmoving and handling activities and entrained dust from vehicle travel on paved and unpaved roads. PM emissions are reported as PM with an aerodynamic diameter of 10 microns or less (PM_{10}) and with an aerodynamic diameter of 2.5 microns or less ($PM_{2.5}$).

Overall, project construction would include several different emission-generating activities, such as site clearing, excavation, trenching, and concrete work. Emissions from each activity are impacted by the size and duration of the activity. The magnitude of the emissions for each activity is also influenced by the types and number of equipment, the number of construction workers, and the length and frequency of material delivery and removal trips. In order to estimate emissions associated with these construction activities, the following factors were considered:

- The estimated number of each type of construction equipment anticipated to be used for each construction activity
- The estimated number of hours each piece of construction equipment would be used during each day of construction
- The estimated number of days each piece of construction equipment would be used during each month
- The estimated number of construction workers associated with each construction activity during each month
- The estimated number of material delivery trips anticipated for each month of construction

These construction activity estimates were used with emission factors for each activity to estimate emissions. The emission factors were taken from the U.S. Environmental Protection Agency's (EPA's) Compilation of Air Pollutant Emission Factors (AP-42) (Reference 4.18) and the California Air Resources Board's (CARB's) URBan EMISsions (URBEMIS) 2007 model (Reference 4.19), which estimates air pollution emissions from a wide variety of land use projects and includes CARB's EMFAC2007 model and OFFROAD 2007 model.

Construction Equipment Emissions - Emissions from construction equipment exhaust were estimated using equipment-specific emission factors in units of pounds per hour (lbs/hr). The CARB OFFROAD 2007 emissions model provides emission factors for over 200 different construction equipment based on the type and size of the equipment. The annual emissions for each type of construction equipment were estimated for each year of construction by summing the emissions for each piece of equipment used during that year. Emissions from each piece of construction equipment were estimated from the following equation:

Emissions (lbs/day) = EF x N x H x D x M

Where, EF = emission factor (lbs/hr)

N = number of equipment

H = hours per day of operation

D = days per month of operation

M = months per year of operation

Once the emissions for each piece of equipment were estimated, the total annual emissions were calculated by summing all equipment emissions assumed to occur during that specific year of construction.

Motor Vehicle Emissions - Emissions from increased motor vehicle use associated with the construction project were estimated using emission factors in pounds per mile (lbs/mile) for passenger vehicles (less than 8,500 lbs) and delivery trucks (greater than 8,500 lbs). The emission factors used are conservative values that represent a mix of 45 years of vehicle models (e.g., 1970 to 2014) and account for the emissions from start, running, and idling exhaust. In addition, the VOC emission factors include diurnal, hot soak, running, and resting emissions, and the PM_{10} and $PM_{2.5}$ emission factors include tire and brake wear. Emissions from construction worker commuting, delivery trucks, and onsite car and truck traffic were estimated using the following equation:

$$\text{Emissions (lbs/day)} = EF \times N \times TL \times V$$

Where, EF = emission factor (lb/mile)

N = number of trips per day per vehicle

TL = trip length per vehicle (miles/day)

V = number of vehicles per year

After the emissions for each vehicle type were estimated, the annual emissions were calculated by summing the emissions for all vehicle types for each year of construction. In addition to emissions generated from the motor vehicles, on-road fugitive dust emissions were estimated from resuspension of road dust from the increased motor vehicle use. The PM_{10} and $PM_{2.5}$ emissions were estimated using the equation above for motor vehicle emissions; however, the PM_{10} and $PM_{2.5}$ emission factors were calculated based on the following equation:

$$EF = [k(sL/2)^{0.98} \times (W/3)^{0.53} \times (S/30)^{0.16}]\ (1-P/4N)$$

Where, EF = annual emission factor (lbs/vehicle mile traveled)

k = particle size multiplier (0.015 for PM_{10} and 0.0037 for $PM_{2.5}$)

sL = road surface silt loading (0.06 grams per square meter, AP-42 Table 13.2.1-2 default for 5,000 to 10,000 average daily traffic roadway)

W = average weight of vehicle fleet (2.2 tons)

S = average speed of vehicle fleet (55 miles per hour)

P = number of days with at least 0.01 inch of precipitation (110 for SRS based on AP-42 Figure 13.2.1-2)

N = number of days in averaging period (365 for annual)

Construction Fugitive Emissions - The fugitive dust emissions generated from earthworks activities were estimated based on a tiered methodology utilized in the CARB URBEMIS 2007 model (Reference 4.19). This tiered methodology advancing from Level 1 to Level 4 requires that detailed information be known about a project, as follows:

- For Level 1, fugitive dust emissions are based on an average emission factor for construction activities and the estimated daily acreage graded per day.
- For Level 2, the amount of offsite and onsite cut/fill per day must be known.
- For Level 3, the amount of scraper hours per day and the number of offsite haulage hours per day must be known.
- For Level 4, the amount of onsite and offsite haulage (ton miles/day) must be known.

Because detailed design information was not readily available for the construction activity values necessary to estimate emissions using Levels 2 through 4, the Level 1 methodology was employed to calculate the fugitive dust emissions for each year of construction using the following equation:

PM_{10} emissions (MT/year) = EF x AD / D x 0.907 MT/ton

Where, EF = 0.22 tons PM_{10}/acre-month

AD = Area Disturbed (acres)

D = Duration (months/year)

Because a $PM_{2.5}$ specific emission factor is not available for construction activities on a ton/acre-month basis, the $PM_{2.5}$ emissions were conservatively assumed to be equal to the PM_{10} emissions.

Total Annual Construction Emissions - The total emissions for each year of construction activities were estimated by summing the annual emissions for each of the three emission source types.

2.2.1.2.5 Anticipated Equipment Requirements

A list of equipment that would be used during PDCF construction is shown in Table 2.2-4. Only equipment that would potentially contribute to air pollutant estimates or could generate noise is listed. Table 2.2-4 also shows estimated equipment size (i.e., horsepower), use rates, and construction months per year.

2.2.1.2.6 Estimated Emissions of Criteria Air Pollutants

Estimated amounts of criteria air pollutants that could be emitted during PDCF construction are shown in Table 2.2-5. These estimates are based on expected types and numbers of construction equipment, construction duration, and estimated full-time equivalent (FTE) positions during construction.

Table 2.2-4: PDCF Construction Equipment

Equipment	MaxHP	Equipment Use Rates			Construction Months per year											
		No. Equip.	Hours/ day	Days/ month	Year 1	Year 2	Year 3	Year 4	Year 5	Year 6	Year 7	Year 8	Year 9	Year 10	Year 11	Year 12
Pickups																
Pickup, 2WD 0.5T Crew PUs	175	25	1	15	--	0	4	8	12	12	12	12	12	3	--	--
Pickup, 4WD 1T Crew PUs	250	50	1	10	--	6	8	12	12	12	7	6	4	2	--	--
Trucks-Support																
Flatbed, 6000lb GVW	120	8	2	10	--	2	3	4	6	12	10	4	3	1	--	--
Flatbed, 25,000lb GVW	175	15	2	10	--	2	3	4	8	12	10	6	4	2	--	--
Truck Tractor, 50,000lbs	750	4	2	10	--	2	4	6	8	10	4	2	2	1	--	--
40 Passenger Bus	250	10	2	20	--	4	6	8	12	12	12	12	8	4	--	--
Water Truck	175	3	4	15	--	12	12	12	12	12	12	12	6	0	--	--
Mech. Truck w/boom	250	2	6	10	--	12	12	12	12	12	12	12	6	0	--	--
End Dump Truck 30ton	175	4	4	20	--	8	12	12	12	12	12	12	4	0	--	--
End Dump Truck 13cy	25	4	4	20	--	12	12	12	12	12	12	12	4	0	--	--
Earthmoving Equipment																
Scraper	120	6	8	15	--	8	0	0	0	0	0	6	6	0	--	--
Tractor, CAT D5R	50	1	8	20	--	12	12	12	12	12	12	12	12	3	--	--
Tractor, CAT D8R-Dozer	120	2	8	15	--	8	2	0	0	0	0	6	6	0	--	--
Tractor, CAT D9R-Dozer	175	1	8	15	--	12	2	0	0	0	0	6	6	0	--	--
Compactor	15	2	8	15	--	8	0	0	0	0	0	6	6	0	--	--
Grader, CAT 12H	120	2	8	20	--	6	6	6	10	12	1	0	0	0	--	--
Grader, CAT 14H	175	2	8	15	--	8	6	6	6	6	6	6	0	0	--	--
Structural Equipment																
Trencher, Ditch Witch	50	2	8	15	--	4	12	12	12	12	12	12	12	3	--	--
Hyd Excavator, CAT365C	50	2	8	15	--	8	0	0	0	0	0	0	0	0	--	--
Hyd Excavator, CAT325C	120	2	8	15	--	6	12	12	12	8	6	6	6	1	--	--
Hyd Excavator, CAT345C	175	2	8	15	--	6	12	12	12	8	6	6	6	1	--	--
Loader, CAT 950	120	4	8	15	--	6	12	12	12	8	6	6	6	1	--	--
Loader, CAT 966	175	1	8	15	--	12	6	0	0	0	0	0	0	0	--	--
Skid Loader	50	5	8	15	--	9	12	12	12	12	12	12	12	3	--	--
Roller Dynapac	50	4	8	10	--	6	12	12	12	8	6	6	6	1	--	--
Roller, Vibrating	120	4	8	10	--	6	12	12	12	8	6	6	6	1	--	--

Table 2.2-4: PDCF Construction Equipment (continued)

Equipment	MaxHP	Equipment Use Rates			Construction Months per year											
		No. Equip.	Hours/ day	Days/ month	Year 1	Year 2	Year 3	Year 4	Year 5	Year 6	Year 7	Year 8	Year 9	Year 10	Year 11	Year 12
Cranes																
Crane, Man 150ton	750	1	2	10	--	12	12	12	12	12	12	3	0	0	--	--
Crane, MAN 250ton	NA	2	2	5	--	6	12	12	12	6	2	0	0	0	--	--
Crane, RT-300 13.5T	50	3	4	20	--	6	8	8	10	12	8	6	4	1	--	--
Crane 30ton	50	3	4	20	--	2	4	4	8	10	4	2	1	1	--	--
Crane 50ton	120	3	4	15	--	4	4	4	8	10	4	3	1	0	--	--
Crane 60ton	175	3	2	10	--	3	4	4	8	10	4	3	3	1	--	--
Crane 75ton	250	3	2	10	--	6	8	8	10	10	4	3	2	0	--	--
Crane 120ton	500	3	2	5	--	2	4	4	8	10	4	1	0	0	--	--
Lifts																
Scissor Lift, 30	25	16	6	20	--	0	0	3	8	10	9	8	5	3	--	--
Manlift, Grove T60	50	4	6	20	--	3	6	8	12	12	12	12	6	1	--	--
Forklift, 15000lb tele	120	10	4	10	--	2	2	2	6	10	9	8	6	1	--	--
Forklift, 10000lb tele	175	8	4	15	--	1	2	3	6	12	12	10	6	2	--	--
Forklift, 8000lb warehouse	120	6	6	15	--	3	4	4	6	12	12	12	8	1	--	--
Forklift, 50,000lb Taylor	500	2	2	5	--	4	6	6	8	12	12	8	6	1	--	--
Portable Support Equip																
Generator 20kw	50	10	6	20	--	10	6	6	6	3	0	0	0	0	--	--
Welder, 300amp	120	4	4	15	--	3	6	6	6	10	1	0	0	0	--	--
Compressor-Port, 250cfm	120	10	6	15	--	8	6	6	6	6	6	6	1	0	--	--
Whacker-Compactor	15	10	4	10	--	8	6	6	6	6	6	6	1	0	--	--

Source: Reference 4.14.
Note: NA = not available; cfm = cubic feet per minute.

Table 2.2-5: PDCF Construction Emissions

PDCF Construction Fugitive Emissions from Earthworks Activities (MT/year)												
Pollutant	**Year 1**	**Year 2**	**Year 3**	**Year 4**	**Year 5**	**Year 6**	**Year 7**	**Year 8**	**Year 9**	**Year 10**	**Year 11**	**Year 12**
Fugitive PM_{10}	0.00E+00	2.97E+01	1.93E+01	1.46E+00	4.32E-01	3.36E+00	2.74E-01	5.65E-02	4.07E+00	0.00E+00	0.00E+00	0.00E+00
Fugitive $PM_{2.5}$[a]	0.00E+00	2.97E+01	1.93E+01	1.46E+00	4.32E-01	3.36E+00	2.74E-01	5.65E-02	4.07E+00	0.00E+00	0.00E+00	0.00E+00

a. $PM_{2.5}$ emissions conservatively set equal to the PM_{10} emissions.

PDCF Construction Equipment Emissions from Demolition, Earthwork, Paving, and Construction Activities (MT/year)												
Pollutant	**Year 1**	**Year 2**	**Year 3**	**Year 4**	**Year 5**	**Year 6**	**Year 7**	**Year 8**	**Year 9**	**Year 10**	**Year 11**	**Year 12**
CO	0.00E+00	1.40E+01	1.53E+01	1.67E+01	1.99E+01	2.05E+01	1.60E+01	1.57E+01	1.12E+01	2.45E+00	0.00E+00	0.00E+00
NOx	0.00E+00	2.22E+01	2.50E+01	2.82E+01	3.38E+01	3.50E+01	2.69E+01	2.58E+01	1.78E+01	4.42E+00	0.00E+00	0.00E+00
VOC	0.00E+00	3.72E+00	4.10E+00	4.51E+00	5.36E+00	5.48E+00	4.21E+00	4.06E+00	2.89E+00	6.85E-01	0.00E+00	0.00E+00
SOx	0.00E+00	2.71E-02	3.03E-02	3.44E-02	4.09E-02	4.21E-02	3.30E-02	3.21E-02	2.22E-02	5.57E-03	0.00E+00	0.00E+00
PM_{10}	0.00E+00	1.50E+00	1.60E+00	1.74E+00	2.09E+00	2.17E+00	1.66E+00	1.64E+00	1.16E+00	2.48E-01	0.00E+00	0.00E+00
$PM_{2.5}$[a]	0.00E+00	1.50E+00	1.60E+00	1.74E+00	2.09E+00	2.17E+00	1.66E+00	1.64E+00	1.16E+00	2.48E-01	0.00E+00	0.00E+00
CO_2	0.00E+00	2.33E+03	2.64E+03	3.00E+03	3.57E+03	3.67E+03	2.87E+03	2.78E+03	1.91E+03	4.84E+02	0.00E+00	0.00E+00
CH_4	0.00E+00	3.35E-01	3.70E-01	4.07E-01	4.84E-01	4.94E-01	3.80E-01	3.66E-01	2.61E-01	6.18E-02	0.00E+00	0.00E+00

a. $PM_{2.5}$ emissions conservatively set equal to the PM_{10} emissions.

PDCF Construction On-Road Commuter Emissions (MT/year)												
Pollutant	**Year 1**	**Year 2**	**Year 3**	**Year 4**	**Year 5**	**Year 6**	**Year 7**	**Year 8**	**Year 9**	**Year 10**	**Year 11**	**Year 12**
CO	0.00E+00	9.62E+00	1.16E+01	1.19E+01	1.45E+01	1.47E+01	1.31E+01	1.17E+01	1.06E+01	8.09E+00	5.64E+00	9.25E-01
NOx	0.00E+00	1.18E+00	1.46E+00	1.56E+00	1.80E+00	1.76E+00	1.48E+00	1.21E+00	1.15E+00	9.85E-01	7.41E-01	8.04E-02
VOC	0.00E+00	1.02E+00	1.24E+00	1.30E+00	1.61E+00	1.65E+00	1.50E+00	1.36E+00	1.26E+00	9.81E-01	6.98E-01	1.15E-01
SOx	0.00E+00	1.46E-02	1.89E-02	2.10E-02	2.73E-02	2.97E-02	2.81E-02	2.68E-02	2.58E-02	2.09E-02	1.55E-02	2.62E-03
PM_{10}	0.00E+00	6.89E-01	8.91E-01	9.88E-01	1.29E+00	1.39E+00	1.33E+00	1.27E+00	1.22E+00	9.81E-01	7.22E-01	1.26E-01
$PM_{2.5}$	0.00E+00	2.23E-01	2.90E-01	3.24E-01	4.20E-01	4.54E-01	4.34E-01	4.13E-01	3.98E-01	3.22E-01	2.38E-01	4.09E-02
CO_2	0.00E+00	1.50E+03	1.95E+03	2.16E+03	2.82E+03	3.04E+03	2.90E+03	2.76E+03	2.66E+03	2.17E+03	1.61E+03	2.72E+02
CH_4	0.00E+00	9.04E-02	1.10E-01	1.14E-01	1.41E-01	1.43E-01	1.30E-01	1.18E-01	1.07E-01	8.20E-02	5.74E-02	9.68E-03

Table 2.2-5: PDCF Construction Emissions (continued)

PDCF Total Construction Emissions (MT/year)													
Pollutant	**Year 1**	**Year 2**	**Year 3**	**Year 4**	**Year 5**	**Year 6**	**Year 7**	**Year 8**	**Year 9**	**Year 10**	**Year 11**	**Year 12**	**Max Value**
CO	0.00E+00	2.36E+01	2.69E+01	2.86E+01	3.44E+01	3.52E+01	2.91E+01	2.74E+01	2.18E+01	1.05E+01	5.64E+00	9.25E-01	3.52E+01
NOx	0.00E+00	2.34E+01	2.65E+01	2.97E+01	3.56E+01	3.68E+01	2.84E+01	2.70E+01	1.90E+01	5.41E+00	7.41E-01	8.04E-02	3.68E+01
VOC	0.00E+00	4.74E+00	5.34E+00	5.81E+00	6.97E+00	7.13E+00	5.71E+00	5.42E+00	4.15E+00	1.67E+00	6.98E-01	1.15E-01	7.13E+00
SOx	0.00E+00	4.17E-02	4.92E-02	5.54E-02	6.82E-02	7.17E-02	6.11E-02	5.89E-02	4.80E-02	2.65E-02	1.55E-02	2.62E-03	7.17E-02
PM_{10}	0.00E+00	3.19E+01	2.18E+01	4.19E+00	3.80E+00	6.92E+00	3.27E+00	2.97E+00	6.45E+00	1.23E+00	7.22E-01	1.26E-01	3.19E+01
$PM_{2.5}$	0.00E+00	3.14E+01	2.12E+01	3.53E+00	2.94E+00	5.99E+00	2.37E+00	2.11E+00	5.63E+00	5.70E-01	2.38E-01	4.09E-02	3.14E+01
CO_2	0.00E+00	3.84E+03	4.59E+03	5.16E+03	6.39E+03	6.72E+03	5.78E+03	5.54E+03	4.57E+03	2.65E+03	1.61E+03	2.72E+02	6.72E+03
CH_4	0.00E+00	4.26E-01	4.79E-01	5.21E-01	6.24E-01	6.38E-01	5.09E-01	4.84E-01	3.68E-01	1.44E-01	5.74E-02	9.68E-03	6.38E-01

Source: Reference 4.14.

2.2.1.2.7 Estimated Emissions of Greenhouse Gases from PDCF Construction.

The primary greenhouse pollutant is CO_2. However, methane (CH_4) and nitrous oxide (N_2O) are also considered greenhouse gases and are more damaging to the environment than CO_2. The multiplier used for CH_4 is 21 and the multiplier for N_2O is 310. The resultant total amount of greenhouse gas emitted is calculated by converting the CH_4 and N_2O emissions to equivalent quantities of CO_2, denoted as CO_2e. For construction, the amount of CO_2e emitted is one percent greater (Reference 4.20) than the CO_2 numbers shown in Table 2.2-5.

2.2.1.3 Primary PDCF Structures

The description of primary PDCF structures in this section is taken from the 2009 *Pit Disassembly and Conversion Facility Preliminary Documented Safety Analysis* (Reference 4.8, Chapter 2.0).

The primary structures making up the PDCF are the Pu Processing Building, M&SEB, Utility Building, Fan House/Exhaust Stack, Sand Filter Structure, and Administration Building. Sections 2.2.1.3.1 through 2.2.1.3.7 describe the primary structures, including each structure's function; general location within the PDCF area; the safety function of the structure, if applicable; and an overview of its construction materials and gross dimensions.

2.2.1.3.1 Pu Processing Building

The Pu Processing Building, the primary building in the PDCF complex, would be located inside the Perimeter Intrusion Detection and Assessment System (PIDAS) boundary and would incorporate a bermed construction. The Pu Processing Building would contain the various process areas, shipping and receiving, Safe Secure Trailer (SST)/Safeguards Transporter (SGT) loading dock, unpackaging areas, and glovebox operations involved in the plutonium conversion process. This facility, including the loading dock, safe havens, interstitial space, and firewater collection system, would occupy approximately 153,600 square feet (ft^2). Its structure is credited by the accident analysis with providing safety class confinement protection to the public and safety significant protection to workers outside the building and to the public (when not credited as safety class for designated accident scenarios). This building would provide confinement of materials released within its walls and would maintain confinement and structural integrity during and following a design-basis earthquake or tornado. All exterior structural elements, the foundation, doors, and interior walls that provide structural support are designed to meet Performance Category (PC) 3 criteria. As part of the building confinement structure, entry/egress doors could utilize interlocks to prevent a ventilation pathway to the environment.

The Pu Processing Building is also designed to minimize the spread of fires occurring within the building and segregating radiological material. The majority of its interior walls would consist of either 2- or 3-hr fire ratings, and the building design incorporates low-combustible design features to minimize the severity of fires. Excluding the Main and Product Vaults and the Interim Storage Module (ISM) vault-type structure, the entire Pu Processing Building, including the underneath portion of the facility gloveboxes, would be protected with a fire sprinkler system. Heat detectors would be included in all gloveboxes and in the Internal Transport System (ITS) maintenance areas. The building design would include a firewater collection system to prevent criticality caused by water moderation in process rooms that could contain

free forms of oxide. In these areas, criticality-safe drains would be provided that are designed to prevent any accumulated water in the rooms from exceeding a depth of 4 centimeters (cm). The fire suppression system, firewater collection system, and low-combustible design have been identified as safety significant.

The Pu Processing Building roof is designed with reinforced concrete. The roof would be covered with layers of rock, gravel, clay, and topsoil. The outer walls would be reinforced concrete, and a thick concrete floor mat would be under a concrete topping. Interior walls that provide structural support would be made of reinforced concrete of various thicknesses. Walls parallel to the Shipping Container Unpacking/Packaging and the Cargo Restraint Transporter (CRT) Vault would meet or exceed a 2-hr fire rating and establish Fire Area boundaries within the building. Other interior walls would consist of gypsum board on steel studs, or liner panels on steel support frames. These walls would typically have a 2-hr fire rating. The 2-hr fire-rated gypsum walls used to establish Fire Area boundaries meet PC-2 and seismic requirements. Fire Areas are typically divided into multiple Fire Zones. Internal Fire Zone walls are required to be constructed as 2-hr fire-rated barriers, with the exception of ITS conveyor penetrations, and meet PC-2 seismic requirements. All Fire Area and Fire Zone wall boundaries are designated as safety significant. Ceilings for most of the occupied areas would consist of suspended ceiling assemblies that are fire-resistive-rated for 1 hr.

The SST/SGT truck bay and loading docks would have sidewalls, roofs, and support walls of reinforced concrete. The truck bay would be equipped with ventilation louvers; this defense-in-depth feature would remove heat from the SST/SGT bay during postulated truck fires. The SST/SGT truck bay would also be equipped with a fire suppression system that is designated as safety significant. The floors would consist of reinforced concrete. The SST/SGT truck bay roof would consist of reinforced concrete topped with a cover and berm.

The Pu Processing Building would also be provided with three safe haven areas. Two safe havens would be located on the north and south ends of the building, outside the outer walls. The third would be located in the SST/SGT loading dock area. Each safe haven would be provided with an independent air supply. The safe havens on the north and south ends of the building are each designed to house the anticipated maximum building occupancy of 154 persons, based on 7 ft^2 per person. The safe haven located at the SST/SGT loading dock area would occupy approximately 800 ft^2 and would provide safe haven to dock personnel. The safe havens would also have space for decontaminating personnel and triage. Emergency exits would be provided that lead to safe haven areas. The safe havens on the north and south ends of the building would be isolated from the building by 3-hr fire-resistive-rated construction and doors; the loading dock area safe haven would be isolated from the building by a 2-hr separation.

2.2.1.3.2 Mechanical & Support Equipment Building (M&SEB)

This section describes the M&SEB, including the Material Access Area (MAA) Portal (also called the Entry Control Facility [ECF]) and the Diesel Fuel Storage Vault. The M&SEB would be located inside the PIDAS perimeter fence line. This structure would house service functions to support the operations in the Pu Processing Building. The 55,700-ft^2 M&SEB would be a combination of a reinforced concrete structure and a steel structure. The steel structure would consist of metal wall panels and insulation on structural steel members. Mechanical equipment, lockers, a break room, and offices would be located in the steel segment of the building.

Heating, ventilation, and air conditioning (HVAC) air supply equipment, control and communications equipment, emergency generators, and uninterruptible power supply (UPS) batteries would be housed in the concrete-reinforced segment of the building. The exterior of the concrete-reinforced structure is designated as safety class and designed to PC-3 requirements to support the normal air supply tornado dampers and to protect the emergency generators, supporting components, and associated electrical distribution. Internal walls separate and segregate the emergency generators and associated equipment. These walls are designated as safety class and are designed in accordance with PC-3 seismic, 2-hr fire-rated construction. Exit corridors are 1-hr and 2-hr fire-resistive-rated. Two-hr fire barriers separate offices and locker rooms from the mechanical equipment areas. Fire sprinklers would be provided for all areas of the building.

The ECF would connect the M&SEB and the Pu Processing Building. It would occupy approximately 4,000 ft^2 and would consist of a concrete-reinforced PC 3 structure having a cover and a berm. Nonstructural walls within the entry portal would be gypsum board on steel stud members.

The Emergency Diesel Fuel Storage Vault would house two long-term storage diesel fuel tanks. The vault would be approximately 1,700 ft^2. This safety class structure would perform the function of protecting the emergency diesel fuel storage tanks from external and natural phenomena (NP) hazards. Also, for fires that potentially originate within the emergency diesel fuel tank vault, the vault structure would inhibit propagation of the fire to the M&SEB. The vault would be constructed of concrete walls, ceilings, and floors and would be surrounded on three sides by earthen fill. It is PC-3 rated to provide protection to the tanks during seismic and tornado events. Access to the storage area would be through access hatches. Ventilation would be provided for the vault.

2.2.1.3.3 Utility Building

The Utility Building would be an aboveground building located on the southeastern side of the PDCF site, outside the PIDAS but inside a limited area perimeter fence line. It would be a one-story structure with slab-on-grade foundation; steel framing with exterior walls of metal wall panels, insulation and interior liner panels; and various interior fire-resistive-rated wall assemblies due to electrical equipment. This building would occupy approximately 15,500 ft^2 and would house the utility support equipment, standby generators, a UPS battery bank, and computer controlled stations to monitor the utility systems.

This building is designated safety significant because it would house the safety significant standby generators and standby UPS. All structural components, including exterior walls and foundation, interior structural walls, and interior fire barriers for safety significant standby power components, are designed to PC-2 criteria. The building would be provided with an automatic sprinkler system.

The Standby Diesel Fuel Storage Tank would be a 31,900-gallon (gal) carbon steel horizontal tank located 30 feet (ft) north of the Utility Building. The tank would be situated above-grade in a concrete basin. The tank would measure approximately 41 ft long by 12 ft wide, and the concrete basin would measure 58 ft long by 18 ft wide by 7 ft deep, with a containment capacity of 35,143 gal. The tank capacity would be sufficient to supply a standby diesel generator at 100 percent capacity for several days, with a 33-percent fuel storage margin. The Standby

Diesel Fuel Storage Tank would be located adjacent to the Utility Building to support the functions of the standby diesel generators.

2.2.1.3.4 Fan House and Exhaust Stack

The Fan House structure (Figure 2.2-2) would be designed to pull the air from the Pu Processing Building through the Sand Filter Structure to be exhausted as filtered air through the Exhaust Stack. The structure would support the Pu Processing Building HVAC Confinement System function of filtering potential releases. Fan House assemblies that support the HVAC confinement function are rated for PC-3 NP events.

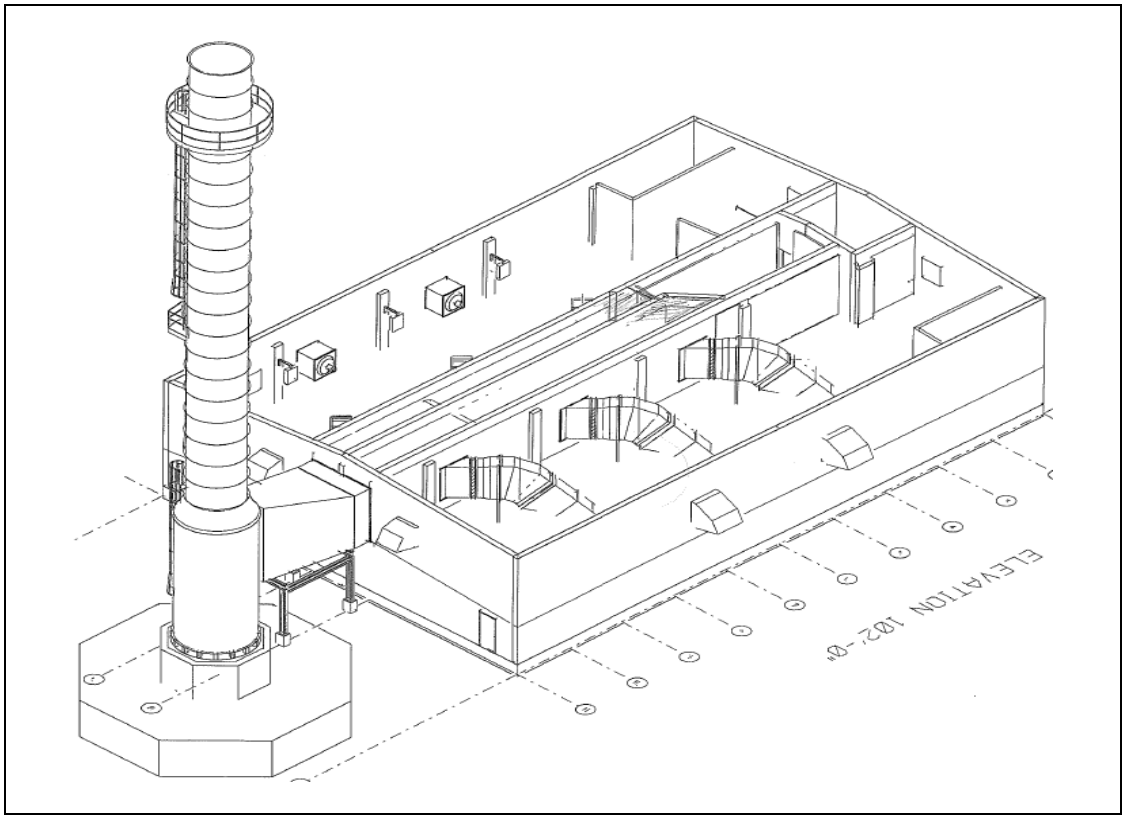

Source: Reference 4.8, Chapter 2.0.

Figure 2.2-2: Fan House and Exhaust Stack General Layout

The Fan House would measure approximately 110 ft long by 74 ft wide and would occupy approximately 8,100 ft^2. It would house the air fans, required ductwork, storage spaces, and a control room. Its six centrifugal exhaust fans would move air through the Pu Processing Building's secondary and tertiary HVAC system. The Fan House would consist of two separate fan areas that could be controlled independently; these areas would be separated by 12-ft-wide inlet and outlet ducts that run the length of the Fan House. Three fans would be located on each side of the duct system. The outlet ducts would run through the Fan House to the Exhaust

Stack. The control room would monitor the fan system to ensure that the directed airflow to the Exhaust Stack met environmental safety requirements.

The facility would be equipped with an automatic sprinkler system. The Fan House and the inlet and outlet ducts would be constructed of reinforced cast-in-place concrete; the Exhaust Stack would be constructed of metal. Nonstructural interior walls would be constructed of gypsum board security mesh on steel studs. The Fan House structure is designated as safety class.

The Exhaust Stack would be located approximately 20 ft south of the Fan House. The Exhaust Stack height would be 120 ft, based on EPA good engineering practice and value engineering analysis. A stack monitoring room would be located in the Fan House. The stack would also perform the safety class function of supporting the Pu Processing Building HVAC Confinement System and is designed to PC-3 criteria.

2.2.1.3.5 Sand Filter Structure

The Sand Filter Structure would be located close to the Fan House inside the fence line but outside the PIDAS perimeter fence line. The building would occupy approximately 43,400 ft^2. The Sand Filter Structure and connecting supply and exhaust tunnels are designated as a safety class PC-3 qualified structure and would support the Pu Processing Building HVAC Confinement System. This structure is designed to filter potentially contaminated air that would be received as by-product from the process operations within the Pu Processing Building or that would result from postulated accidents. Concrete ducts would connect the Sand Filter Structure to the Pu Processing Building for air flow, to the M&SEB for power cabling, and to the Fan House for ventilation. The Sand Filter Structure, including the air ducts, would be approximately 292 ft long by 183 ft wide. All but two feet would be below grade.

The Sand Filter Structure would have eight levels of filter material: one level of plenum and seven layers of gravel and sand. The structure would include connecting inlet and outlet tunnels that run along the east and west sides of the facility. The walls, floor, roof, and inlet and outlet tunnels would be made of reinforced concrete.

Air would enter the base of the Sand Filter Structure and would flow into distribution troughs spaced along the length of the sand filter; these troughs would distribute the air up through stainless steel grating and through the graded gravel and sand bed. The filtered air would be drawn into an open space on top, just under the roof slab, and would exit through the exhaust tunnel leading to the Fan House. Because the structure would be unoccupied, an automatic sprinkler system would not be required.

2.2.1.3.6 Administration Building

The Administration Building would be located north of the Sand Filter. This multi-story structure would house offices, cubicles, conference rooms, and office equipment necessary to perform administrative functions. The Administration Building would consist of a concrete foundation, steel structure with metal wall panels and insulation, and Class I fire-resistive roof assembly over steel deck, of noncombustible construction. The interior walls would be of full-height metal stud drywall construction, fire-resistance rated where required, and of low demountable panel construction for offices for the remainder of the building.

Space for supportive office functions would include conference rooms; a vault area; and mechanical, electrical, and communication equipment rooms. Personnel support facilities would include restrooms and one large break/lunch room. The break/lunch room would serve cafeteria-type meals that would require expanded kitchen service and preparation/cleanup equipment.

This building is not credited to mitigate the consequences of a radioactive release, because the operations in the building could not lead to a radioactive release.

2.2.1.3.7 Glovebox Fabrication Facility

A Glovebox Fabrication Facility was not included on the original design of the PDCF but would be needed if the PDCF were built and operated. This facility would be used for fabrication of all PDCF process gloveboxes. This facility would house some administrative offices and, in the fabrication area, would use an overhead crane to lift of the assembled units. Once fabrication of the gloveboxes was complete, this facility could be used as a material warehouse for PDC.

2.2.2 Operation

The description of PDCF operations in this section is taken from the 2009 *Pit Disassembly and Conversion Facility Preliminary Documented Safety Analysis* (Reference 4.8, Chapter 2.0).

The PDCF is designed for a 20-year life with a mission to process 27.5 MT at the facility's design throughput rate of 3.5 MT (3.86 tons) of plutonium metal per year. Facility operations would require a staff of about 500 personnel with a peak employment of 550 staff. The PDCF design life of 20 years would allow for potential changes in the facility mission.

Activities involving radioactive materials or externally contaminated containers of radioactive materials would be conducted in gloveboxes. The gloveboxes would be interconnected by a contained conveyor system to move materials from one process step to the next. Gloveboxes would remain completely sealed and would operate independently, except during material transfer operations. Built-in safety features would limit the temperature and pressure inside the gloveboxes and ensure that operations remained within criticality safety limits. When dictated by process needs or safety concerns, an inert atmosphere would be maintained in select gloveboxes. For safety reasons, the exhaust from the certain gloveboxes would be monitored continuously for unplanned releases of radioactive contamination. The atmosphere in the gloveboxes would be kept at a lower pressure than that of the surrounding areas so that any leaks of gaseous or suspended PM would be contained and filtered appropriately.

The ventilation system would include the sand filter and the glovebox high-efficiency particulate air (HEPA) filters and would be designed to maintain confinement, thus precluding the spread of airborne radioactive particulates or hazardous materials within the facility or to the outside environment. Both intake and exhaust air would be filtered, and exhaust gases would be monitored at the stack for radioactivity.

The PDCF would accommodate the following surplus plutonium-processing activities: pit/clean metal receipt, storage, and preparation; pit disassembly (PITD); plutonium separation and conversion; oxide blending and sampling; non-destructive assay (NDA); product canning; product storage; product inspection and sampling for international inspection; product shipping;

declassification of parts not made from special nuclear materials (SNM); HEU decontamination, packaging, storage, and shipping; tritium capture, packaging, and storage; and waste packaging, sampling, and certification. Additional areas for support activities would be needed, including office space, change rooms, a central control room, a laboratory, mechanical equipment rooms, mechanical shops, an emergency generator to supply power to critical safety systems in the event of a power outage, a warehouse, shipping and receiving areas, waste storage, guard stations, entry portals, and parking. Because these facilities would not contain or process SNM, they would not be required to be in hardened space and thus could be located in other space available at the candidate sites. Separate truck bays in the hardened facility would accommodate DOE's SST/SGTs.

Incoming pits and clean metal would be received from offsite shipments in CRTs/cargo pallet assemblies (CPAs), which would contain the pits and clean metal in shipping packages. Incoming plutonium metal would be received from onsite or offsite shipments in U.S. Department of Transportation (DOT) Type B shipping packages. Offsite shipments of DOT Type B shipping packages would be received in CRTs or CPAs. The shipping packages would normally be placed in storage prior to unpacking. After initial unpacking from the CRTs/CPAs and shipping packages, the material containers (sealed inserts [SIs] for holding pits and 3013 cans for holding surplus plutonium metal) would be placed in storage. The empty CRTs/CPAs and shipping containers would be placed in a storage area prior to reuse. When the facility was ready to process each material, the material containers would be removed from storage to finish unpacking. The containment vessels (CVs) holding the SIs would be sampled for tritium prior to final unpacking.

Following unpacking, the pits would be mechanically disassembled and the plutonium would be separated from other materials. In addition, the surplus plutonium metal received separate from the pits would be prepared for further processing. Other by-products from the disassembly process would be packaged, stored, and shipped to DOE sites. The plutonium metal that was bonded with HEU and beryllium would be size-reduced, then chemically separated from these materials via a hydride/dehydride (HYD) process. All mechanically and/or chemically separated plutonium from pits or plutonium metal would then be converted to plutonium oxide via a direct metal oxidation (DMO) process.

The plutonium oxide produced by the DMO process would be placed in interim storage prior to the final processing steps. The HEU, uranium parts, and HEU/plutonium materials that were mechanically and chemically separated from the plutonium would be processed and handled separately. The HEU streams would be converted to an oxide form (i.e., HEU oxide) via DMO.

After conversion, the plutonium oxide would be transported to the ISM, where it would be assayed before being moved to the Oxide Product Handling (OPH) glovebox. The plutonium oxide would then be conditioned to ensure that it was sanitized before being canned into a 3013 can.

After canning, the plutonium oxide would be assayed in the Product NDA module. The canned plutonium oxide would then be placed into a four-position pallet that would be stored in the Main or Product Vault before packaging and shipment. The plutonium oxide product from the Pu Processing Building would have to meet MFFF feed specifications, be deemed unclassified, and be DOE-STD-3013 compliant before it would be shipped.

The HEU oxides would be canned, assayed, and stored prior to packaging and shipment. These oxides would be assayed using the Shipping and Receiving NDA equipment. The HEU oxide would then be transferred to the Main Vault awaiting packaging and shipment to the Oak Ridge Y-12 Plant.

Figure 2.2-3 shows the general layout of the PDCF processes.

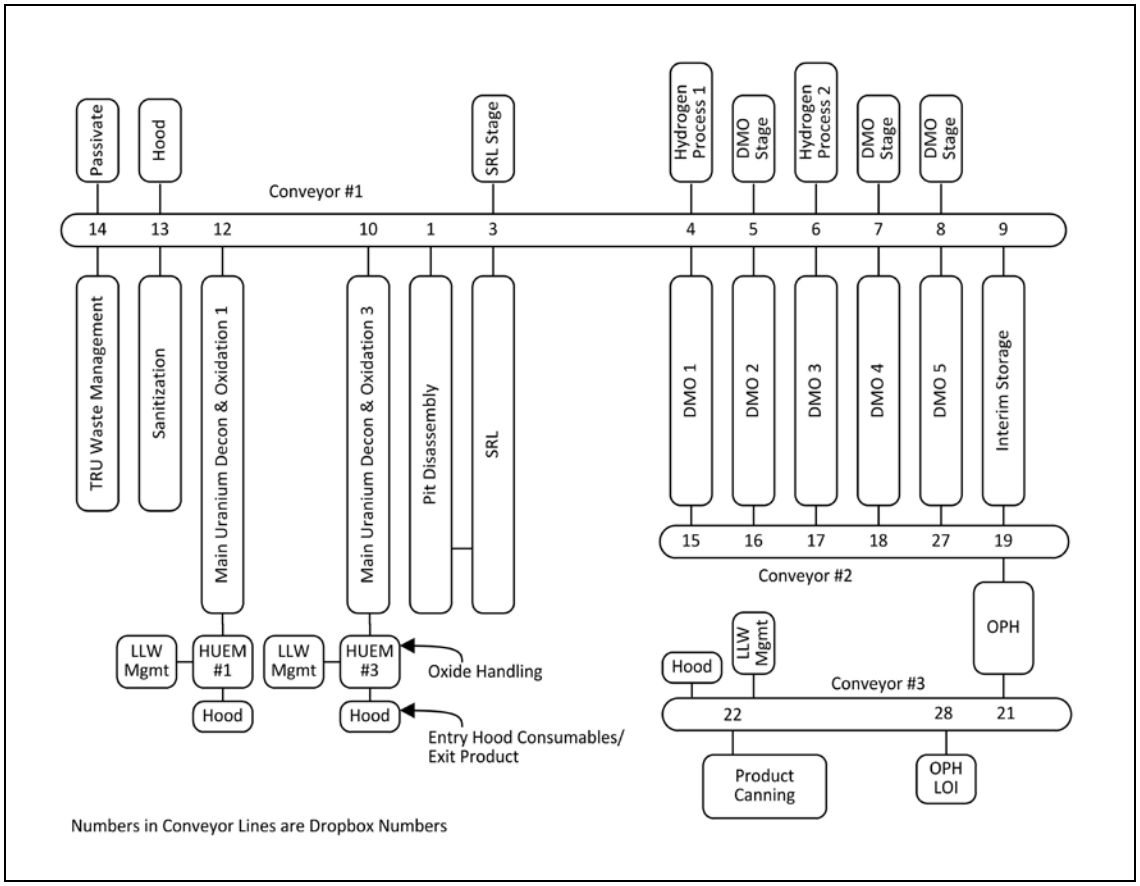

Source: Reference 4.8, Chapter 2.0.

Figure 2.2-3: Layout of PDCF Processes

Non-SNM material would be generated during the mechanical disassembly process and plutonium chemical separation process. Non-SNM material would be sanitized for disposal as TRU waste. All beryllium material that was separated from the plutonium would be processed as non-SNM. Other wastes generated by the Pu Processing Building's main processes would include the following:

- TRU solid wastes from the Pit Processing, Special Recovery Line (SRL), Plutonium Conversion, Plutonium Separation, OPH, and Product Canning processes
- Low-level waste (LLW) from the Uranium, NDA, Vault Storage, Unpacking and packing, and Shipping and Receiving processes

Other wastes would be generated by the Pu Processing Building's process support and utility systems. All solid wastes generated by the Pu Processing Building would be collected and managed by the Waste Management System, which would transport these wastes to the appropriate SRS Solid Waste Facility for disposal or treatment at an onsite or offsite facility.

The primary process systems that would be located in the Pu Processing Building are as follows:

- Shipping and Receiving System
- Vault Storage System
- PITD System
- SRL System
- Plutonium Conversion System (DMO)
- Plutonium Separation System (HYD)
- OPH System
- Product Canning System
- ITS
- NDA System
- Product Packing and Shipping
- Uranium Processing & Staging System
- Sanitization (SAN) System
- Waste Management System
- Analytical Laboratory System

2.2.2.1 Shipping and Receiving System

During receiving and unpacking operations at the Pu Processing Building, the SST/SGT dock would receive incoming pits and plutonium metal, and the loading dock would receive incoming supplies/parts and empty containers. The loading dock could also receive a single shipment of SNM in a DOT Type B package.

2.2.2.2 Vault Storage System

There would be three vault storage locations (hereinafter collectively referred to as "vaults") within the Pu Processing Building: one for pits, one for plutonium metal, and one for plutonium oxide. These are the CRT Vault, Main Vault, and Product Vault. The CRT Vault and the Main Vault would be the only vaults used to store HEU metal and oxide. The Main Vault and Product Vault vestibules would also house day racks, which would be used to minimize entries and personnel exposures in the Main and Product Vaults.

The various Pu Processing Building vaults would contain fixed rack storage locations (racks) or administratively controlled floor locations designed to hold or store the various types of storage/transfer containers employed throughout the Pu Processing Building.

2.2.2.3 Pit Disassembly System

The PITD System would remove the pit from the SI, cut the pit into hemishells using a remotely controlled lathe operation, denest the pit materials, size-reduce hemishells into manageable pieces for the Plutonium Conversion and Separation operations (DMO and HYD), and segregate the pit materials for further processing in DMO, HYD, Uranium Processing, and SAN. The PITD System would also be capable of receiving and opening 3013 cans containing plutonium oxide product that has failed loss-on-ignition (LOI) testing and would be recalcined in DMO and 3013 cans containing plutonium metal to be processed in DMO. The PITD System would consist of two modules. The first module, CV unpacking area (CV Unpack), would include the CV Unpack enclosure and the shuttle rotator and transfer tunnel. The second module, PITD, would include the lathe glovebox and staging glovebox and house the size reduction area.

2.2.2.4 SRL System

The SRL would receive tritium-contaminated pits from the CV Unpack enclosure. Its primary mission would be to disassemble tritium-contaminated pits and prepare the material for further processing in the DMO (uranium and plutonium), SAN, and hydrogen processing modules. It could also serve as a back-up line to PITD.

The design for the SRL would include the equipment necessary to remove the pit from the airlock transfer shuttle, bisect and denest, perform size-reduction operations, and move materials within the glovebox.

2.2.2.5 Plutonium Conversion System (DMO)

The Plutonium Conversion process would use DMO modules to convert plutonium metal to an oxide product prior to downstream blending and canning. Tritium, if any, would be removed. Plutonium metal pieces or ingots would be received from the PITD, SRL, and Plutonium Separation Systems. The Plutonium Conversion System would receive plutonium metal after the pit was disassembled and size-reduced. Plutonium metal coming from the Plutonium Separation System would be in the form of plutonium ingots contained within a crucible. PITD could also forward clean plutonium metal (i.e., plutonium ingots or metal pieces that have been shipped to the PDCF and unpacked within the PITD System) to the Plutonium Conversion System as feed. Feed materials also would include plutonium oxide product that has failed LOI testing for recalcining.

The five DMO glovebox lines would be divided into two primary sections: feed preparation and a DMO process glovebox. These five lines would share three staging areas, and each line would be connected to the ITS via an airlock and dropbox. The staging glovebox would be used to stage feed when the DMO process glovebox was unavailable.

2.2.2.6 Plutonium Separation System (HYD)

Plutonium Separation operations would be conducted in the HYD module, which would separate plutonium metal from uranium or beryllium. The products would include plutonium ingots within a magnesium oxide crucible, which would be sent on to the Plutonium Conversion System; HEU pieces contaminated with plutonium, which would be sent on to the Uranium Processing System; or non-SNM pieces, which would be transferred to the SAN System to sanitize classified aspects of the pieces.

2.2.2.7 OPH System

The Plutonium OPH System would consist of two process modules: OPH and ISM. Both processes would be downstream of Plutonium Conversion System lines. The ISM would consist of a milk bottle storage vault-type structure, a CPT connected to a dropbox at the end of ITS Conveyor, an NDA system to measure the plutonium oxide in a milk bottle, and a glovebox/hood that would be connected to both ITS Conveyors. The functions of OPH would consist of inverting milk bottles, conveying oxide, milling, blending, packaging, and sampling. The objective of the OPH System would be to blend and sanitize the product oxide to meet programmatic and MFFF requirements. Product oxide material, contained in milk bottles from the ISM vault-type structure and/or DMO, would be introduced into the OPH process module one bottle at a time. When the milk bottle enters the OPH glovebox, a vertical manipulator would remove the bottle from the Material Transfer Container, place it on the scale to be weighed and barcoded, then loaded in the bottle inverter. The bottle inverter would provide a seal to the blending and milling system and invert the milk bottle. The material would be dumped into the mill feeder, which would then auger the oxide at a set discharge rate into the mill. Once the oxide was milled, it would fall into the blender and be blended. After blending, the product oxide would be packaged in Cogema convenience cans. The Cogema convenience cans would be staged, then transferred from the process glovebox assembly through an airlock to the exit dropbox for subsequent transfer to the Product Canning Module via ITS Conveyor.

2.2.2.8 Product Canning System

The Product Canning system would consist of a processing line in a room consisting of glovebox and fissile material workstations for performing automated bagless transfer loading of convenience cans into inner cans, radiological surveys, helium leak checks, and outer can welding. The inner canning Bagless Transfer System would be used to seal Cogema convenience cans inside 3013 inner cans in preparation for outer canning processes. The Cogema convenience cans would be crimp-seal cans that contained SNM (i.e., plutonium oxide). The 3013 outer cans would serve as the primary barrier isolating the stored material from the environment.

2.2.2.9 Internal Transport System (ITS)

Material would be moved via the ITS, hoists, shuttle carriages, manipulators, robots, automated guided vehicles (AGVs), and forklifts. Items to be moved would include process material, equipment, and supplies between gloveboxes.

2.2.2.10 Non-Destructive Assay (NDA) System

The NDA System would provide service for shipping and receiving, HEU oxide outer containers, product materials, waste containers, and milk bottles transported to and from the ISM area. This system would consist of computer-based assay instruments; overhead manipulators, hoists, and cranes to load and unload the instruments; conveyors to move items into and out of the instruments; and host controllers that would sense and control instrument status, schedule measurements, archive the results of the assays, and direct manipulator/robotic activities via the Process Control System.

The NDA System functions would include calorimeters, a gamma ray isotopic system (GRIS), a gamma ray assay system, a californium-252 shuffler, a passive/active neutron multiplicity counter, and a digital radiography X-ray imaging system. The assay instruments would generally be configured into the base of a specially designed instrument and support framework. Several of the NDA instruments would have either lag storage racks or storage areas nearby. Product NDA would have a lag storage rack with a 3 x 8 array. ISM NDA would be inside the ISM vault-type structure and would be supported by the same overhead robotic crane that loaded and unloaded milk bottles into the storage positions.

Items would be assayed on the different instruments according to their mass of nuclear material, the type of nuclear material, the container holding the items, and their location in the facility (i.e., inside or outside of the glovebox).

2.2.2.11 Product Packaging and Shipping

Product Packaging and Shipping operations would involve packaging and shipping outgoing plutonium oxide, HEU oxide, and by-products at the SST/SGT dock and LLW, TRU waste, and outgoing supplies/parts and empty containers at the loading dock. The shipment of supplies/parts and empty containers at the loading dock would not include SNM; therefore, only common industrial hazards would be expected at the loading dock.

2.2.2.12 Uranium Processing and Staging System

The function of the Uranium Processing and Staging System would be to convert HEU metal to HEU oxide that met Y-12 acceptance criteria for plutonium contamination and to package it for later shipment to Y-12.

The Uranium Processing and Staging System would receive and process HEU hemishells, components, and HEU pieces contaminated with plutonium. There would be two dedicated uranium processing lines for the HEU Main (HEUM) process area. These lines would include HEU electrolytic decontamination (HED) and size reduction, DMO, and oxide handling.

Each HEUM line of the Uranium Processing and Staging System would process uranium hemishells provided by the PITD or the SRL Systems. The HEUM HED process, and subsequent size-reduction process, would produce uranium metal pieces that have been decontaminated to specific acceptance standards. The HED process would remove uranium metal along with plutonium and americium metals and oxides adhering to the uranium surface. The uranium metal pieces from size-reduction would then be oxidized in the HEUM DMO furnaces, producing a uranium oxide powder. The uranium oxide powder would be transferred

to the downstream HEUM OPH glovebox, where it would be sampled and packaged into an HEU oxide container. The HEU oxide container would be wiped down/decontaminated to reduce its surface contamination, then placed into an HEU oxide outer container. The HEU oxide outer container would later be placed into a Type B package for shipment to Y-12.

2.2.2.13 Sanitization (SAN) System

The primary function of the SAN System would be to transform classified non-SNM shapes into unclassified shapes by melting and recasting the items. Feed would come from PITD, SRL, and Plutonium Separation. The SAN System would also provide sanitization of tooling with classified shapes (e.g., pit chucks) and chips from lathing operations in the PITD and SRL Systems. Material identity would be verified and the pieces would be segregated and placed into crucibles and moved into a microwave casting furnace. The microwave furnace would melt (sanitize) the pieces in an upper crucible and, by drip-casting (pouring), produce ingots in a lower ingot mold. After cooling, the ingots and the ingot molds would be transferred to the Waste Management System through drum-ports for certification and shipment to WIPP. Furnace waste products, such as spent crucibles, would be sent to the Waste Management System.

2.2.2.14 Waste Management System

The PDCF would generate various waste streams and manage these wastes in accordance with the waste acceptance criteria of the receiving facility. Based on current design, the PDCF would not require a Resource Conservation and Recovery Act (RCRA) permit for the waste handling processes performed. PDCF radioactive and hazardous waste management functions would include collection, segregation, stabilization, and storage of facility-generated waste types for subsequent treatment, as necessary, and disposal at other locations.

Clean Air Act permits, Clean Water Act permits, and site-specific permits are discussed in greater detail in the PDCF Environmental Permit and Compliance Plan (Reference 4.21).

2.2.2.15 Analytical Laboratory System

The primary mission of the Analytical Laboratory would be to support the facility mission with respect to compliance with product specifications, process control, and material releases. This would include verification that plutonium oxide product was in compliance with the MOX feed interface control document (ICD). The laboratory would also analyze samples of main HEU oxide to ensure compliance with the Y-12 ICD and other process streams.

2.2.3 Estimates of Waste and Air Emissions During Operations

Table 2.2-6 shows estimated volumes for waste generated as a result of PDCF operations. All waste streams generated from PDCF have an acceptable disposition pathway.

Table 2.2-6: Estimated PDCF Waste Volumes

Waste Type	Estimated Volume (Annual)
TRU and Mixed TRU Solid	4,970 ft^3
LLW Solid	30,975 ft^3
Low-Activity Waste (LAW) Liquid	24,041 gal
Mixed LLW Solid	None
High-Activity Waste (HAW)/Mixed HAW/Concentrated Liquids	11,721 gal
Hazardous Solid	4 ft^3
Non-Hazardous Solid	63,000 ft^3
Non-Hazardous Liquid	8,235,000 gal

Source: Reference 4.17.

The estimated PDCF Project diesel generator emissions are shown in Table 2.2-7. The operation of the generators will be limited to 100 hours per year for testing. As a conservative measure, the emissions for these generators are based on 500 hours per year.

Table 2.2-7: PDCF Project Diesel Generator Emissions

Condition/Pollutant	PDCF 600 kW		PDCF 1,825 kW		Total
Diesel Size (kW)	600	600	1825	1825	--
Fuel Usage (gal/hr)	42.8	42.8	130	130	--
British thermal units (Btu)/Gal Fuel	139,200	139,200	139,200	139,200	--
Hours/year Operation	500	500	500	500	--
Criteria Pollutant (MT/year)					
NOx	4.32E+00	4.32E+00	1.31E+01	1.31E+01	3.49E+01
CO	1.15E+00	1.15E+00	3.49E+00	3.49E+00	9.27E+00
SOx	2.05E-03	2.05E-03	6.24E-03	6.24E-03	1.66E-02
CO_2	2.23E+02	2.23E+02	6.77E+02	6.77E+02	1.80E+03
PM	1.35E-01	1.35E-01	4.10E-01	4.10E-01	1.09E+00
PM_{10}	1.11E-01	1.11E-01	3.37E-01	3.37E-01	8.97E-01
PM2.5	7.36E-02	7.36E-02	2.24E-01	2.24E-01	5.95E-01
VOC	1.11E-01	1.11E-01	3.36E-01	3.36E-01	8.94E-01
Methane	1.09E-02	1.09E-02	3.32E-02	3.32E-02	--
Pb	6.73E-04	6.73E-04	2.04E-03	2.04E-03	5.43E-03
Hazardous Air Pollutant (kg/year)					
Benzene	1.05E+00	1.05E+00	3.18E+00	3.18E+00	8.47E+00
Toluene	3.80E-01	3.80E-01	1.15E+00	1.15E+00	3.07E+00
Xylenes	2.61E-01	2.61E-01	7.92E-01	7.92E-01	2.11E+00
Propylene	3.77E+00	3.77E+00	1.15E+01	1.15E+01	--
1,3-Butadiene	0.00E+00	0.00E+00	0.00E+00	0.00E+00	0.00E+00
Formaldehyde	1.07E-01	1.07E-01	3.24E-01	3.24E-01	8.61E-01
Acetaldehyde	3.41E-02	3.41E-02	1.03E-01	1.03E-01	2.75E-01
Acrolein	1.06E-02	1.06E-02	3.23E-02	3.23E-02	8.60E-02
Naphthalene	1.76E-01	1.76E-01	5.34E-01	5.34E-01	1.42E+00
Acenaphthylene	1.25E-02	1.25E-02	3.79E-02	3.79E-02	--
Acenaphthene	6.32E-03	6.32E-03	1.92E-02	1.92E-02	--
Fluorene	1.73E-02	1.73E-02	5.25E-02	5.25E-02	--
Phenanthrene	5.51E-02	5.51E-02	1.67E-01	1.67E-01	--
Anthracene	1.66E-03	1.66E-03	5.05E-03	5.05E-03	--
Fluoranthene	5.45E-03	5.45E-03	1.65E-02	1.65E-02	--
Pyrene	5.01E-03	5.01E-03	1.52E-02	1.52E-02	--
Benzo(a)anthracene	8.40E-04	8.40E-04	2.55E-03	2.55E-03	--
Chrysene	2.07E-03	2.07E-03	6.28E-03	6.28E-03	--
Benzo(b)fluoranthene	1.50E-03	1.50E-03	4.56E-03	4.56E-03	--
Benzo(k)fluoranthene	2.95E-04	2.95E-04	8.95E-04	8.95E-04	--
Benzo(a)pyrene	3.47E-04	3.47E-04	1.05E-03	1.05E-03	--
Indeno(1,2,3-cd)pyrene	5.59E-04	5.59E-04	1.70E-03	1.70E-03	--
Dibenz(a,h)anthracene	4.68E-04	4.68E-04	1.42E-03	1.42E-03	--
Benzo(g,h,l)perylene	7.51E-04	7.51E-04	2.28E-03	2.28E-03	--
TOTAL PAH	2.86E-01	2.86E-01	8.70E-01	8.70E-01	2.31E+00

Source: Reference 4.22.
Note: kW = kilowatt; kg = kilograms; PAH = polycyclic aromatic hydrocarbon.

2.2.4 Utility Requirements

The water and electricity requirements for PDCF operations are shown in Table 2.2-8.

Table 2.2-8: Utility Requirements

Utility	Annual Requirement
Water	16,100,000 gallons[a]
Electricity	92,000 megawatt-hours[b]

Sources:
a. Reference 4.23,
b. Reference 4.24.

2.2.5 Resource Requirements

Resource requirements that were used in the SPD EIS Table E-7 (Reference 4.7) are still applicable except for those shown in Table 2.2-9.

Table 2.2-9: Resource Requirements

Gas	Annual Volume
Nitrogen[a]	24,000 m^3
Argon[b]	95,000 m^3
Helium[b]	11,000 m^3

Sources:
a. Reference 4.25.
b. Reference 4.26.

2.2.6 Stormwater Management

The PDCF would have two dedicated stormwater retention basins. One basin would be located on the north side of the PDCF (North Basin); another would be located on the southeast portion of the PDCF site (Southeast Basin). Both retention basins were designed to manage runoff from the PDCF site, including WSB runoff to the Southeast Basin. The locations of the stormwater retention basins are illustrated in Figure 2.2-4.

The North Basin was sized to provide a total discharge volume of 9.9 acre-feet of water for a 100-year storm (Reference 4.17). The Southeast Basin was sized to provide a total discharge volume of 6.4 acre-feet of water for a 100-year storm (Reference 4.17). Stormwater would be collected in the retention basins and discharged through a new permitted outfall adjacent to the PDCF at the unnamed tributary.

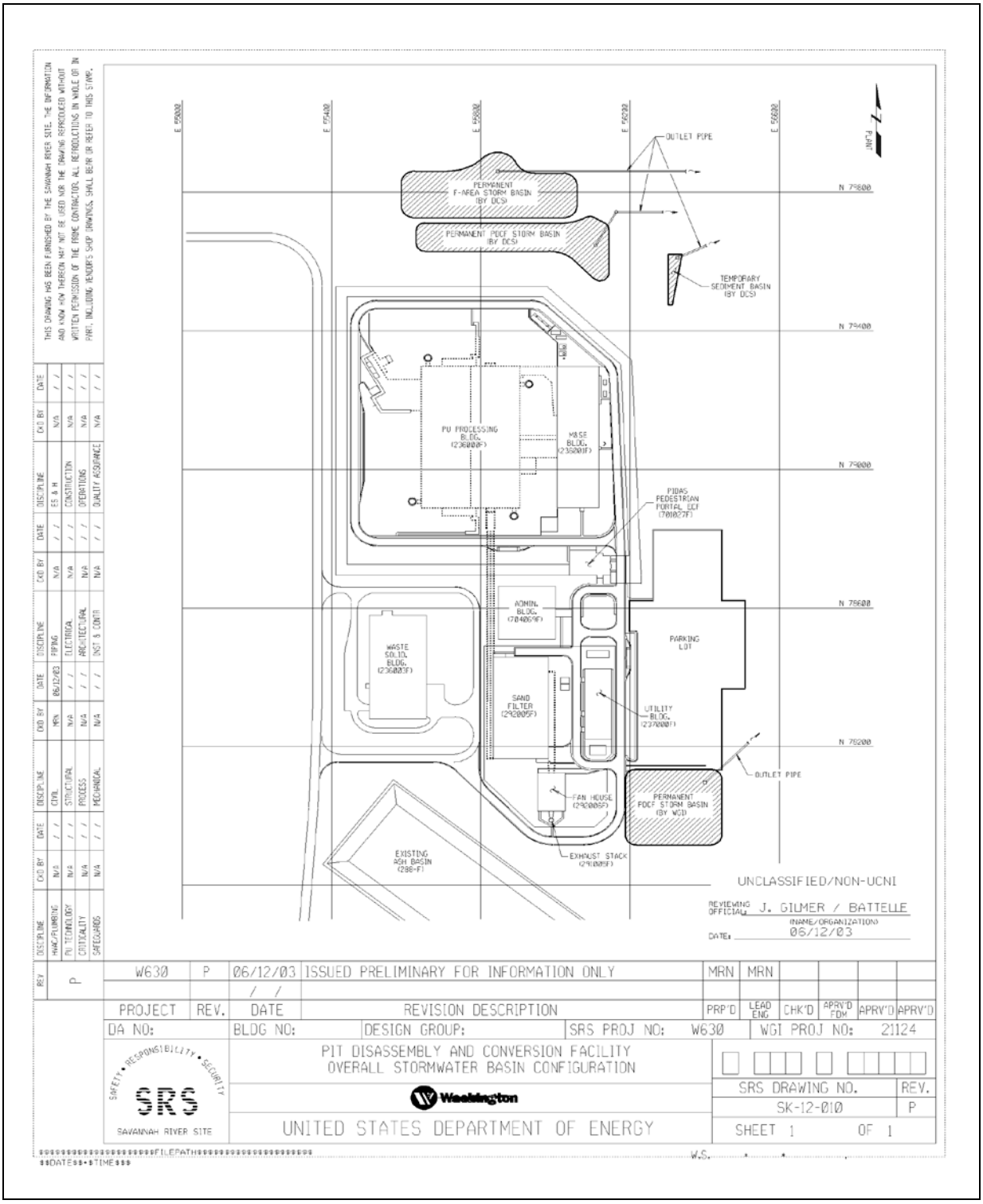

Source: Reference 4.27.

Figure 2.2-4: PDCF Stormwater Retention Basins

2.3 Non-Pit Plutonium

The impacts for processing of non-pit plutonium are presented in this section as a distinct element. That is, non-pit plutonium being processed separately from pit plutonium. The processing of non-pit plutonium will prepare approximately 3.7 MT of AFS-2 metal and oxide for disposition to the MFFF. A majority of this material is currently in inventory and stored in the SRS K-Area and the remaining is planned to be received. The surveillance as part of the ongoing KIS operation will continue in a separate and existing glovebox.

2.3.1 Construction for Non-Pit Plutonium

The execution of non-pit plutonium processing core scope for the glovebox installation, storage racks, HVAC, support systems, and security upgrades would be accomplished using site construction forces. The scopes in F/H Lab would also be executed utilizing site construction forces.

Standard construction equipment such as generators, cranes, concrete saws, and breathing air compressors would be utilized for the majority of construction activities. Construction forces would utilize existing laydown areas for most of their work but would also designate a laydown area within K-Area to improve work efficiency. The existing site concrete supplier would be utilized. The site concrete supplier would utilize a retarder mix in the concrete to help with delivery of the concrete.

The following subsections describe the modifications that need to be completed to the K-Area facility (both interior and exterior) to allow the project to achieve its objectives.

2.3.1.1 Estimated Construction Workforce and Equipment

The estimated construction workforce for non-pit plutonium processing is shown in Table 2.3-1. The design team estimate was based on a scaled version of the full scope PDC design team. The workforce is based on two 10-hr shifts, five days per week as the standard work week (Reference 4.28).

Table 2.3-1: Estimated Non-Pit Plutonium Site Work Force

Year	Construction Craft Workers	Construction Managers, Field Engineer, and Support	Design Team	Total
1	60	18	43	121
2	120	36	55	211
3	150	45	86	281
4	150	45	110	305
5	150	45	150	345
6	150	45	100	295

Source: Reference 4.16.

Note: Employment numbers estimated based on PDC data, with Construction Management estimated to be 30 percent of Construction.

The majority of construction activities would occur in areas with dose rates close to background. A limited amount of demolition and removal (D&R) of contaminated equipment would occur. Due to the nature of the contamination, the external dose rates on this equipment would be low. Total doses during the construction phase would average less than 0.5 person-rem per year. Radiological exposure would be encountered during the D&R of the equipment in the assembly basement area only. Some of this equipment is contaminated; however, the dose rates are negligible. No radiological exposure would be expected after the D&R phase was completed.

An estimate of non-pit plutonium processing construction equipment is shown in Table 2.3-2. This table lists only the equipment that would potentially contribute to air pollutant estimates or could generate noise. Table 2.3-2 also shows estimated equipment size (i.e., horsepower), use rates, and construction months per year. The estimated annual average and peak year diesel fuel usage during construction is 60,000 gallons and 115,000 gallons, respectively, while the total fuel usage is estimated at 360,000 gallons (Reference 4.14).

2.3.1.2 Estimated Emissions During Construction

Estimated amounts of criteria air pollutants and greenhouse gases that could be emitted during construction for non-pit plutonium processing are shown in Table 2.3-3. These estimates are based on expected types and numbers of construction equipment, construction duration, and estimated FTE positions during construction.

2.3.1.3 Estimated Waste Volumes

Annual waste volumes from construction would vary based on construction activities. Solid waste generation rates from construction are provided in Table 2.3-4.

Hazardous waste generated during construction would consist of spent cleaning solutions, spilled antifreeze and fuels, non-recyclable chemicals, and cleaning materials. Some waste would include solid debris from D&R activities that may be characterized as hazardous. There is potential to generate radioactive liquid and polychlorinated biphenyl (PCB)-contaminated wastewater during construction and D&R. Hazardous waste would be either absorbed or packaged and treated offsite.

Construction phase liquid wastewater discharges are anticipated to originate from concrete cutting and other D&R activities. It is anticipated that these discharges may be radiologically contaminated, PCB-contaminated, or both.

Table 2.3-2: Non-Pit Plutonium Processing Construction Equipment

Equipment	MaxHP	Equipment Use Rates			Construction Months per year											
		No. Equip.	Hours/ day	Days/ month	Year 1	Year 2	Year 3	Year 4	Year 5	Year 6	Year 7	Year 8	Year 9	Year 10	Year 11	Year 12
Non-Pit Construction																
500 ton crawler crane	NA	1	2	15	--	--	6	6	--	--	--	--	--	--	--	--
40-75 ton RT crane	120	1	4	20	--	--	12	6	--	--	--	--	--	--	--	--
22 ton RT crane	50	2	6	20	--	--	12	12	--	--	--	--	--	--	--	--
Bulldozer	175	1	6	10	--	--	6	--	--	--	--	--	--	--	--	--
Motorgrader	120	1	6	10	--	--	6	--	--	--	--	--	--	--	--	--
Dumptruck - Tandem	250	4	4	10	--	--	12	12	--	--	--	--	--	--	--	--
Vibratory Roller	50	1	4	10	--	--	6	4	--	--	--	--	--	--	--	--
Backhoe	120	2	6	20	--	--	12	12	--	--	--	--	--	--	--	--
Forklift (heavy)	175	2	4	20	--	--	12	12	12	12	--	--	--	--	--	--
Forklift (medium)	120	2	6	20	--	--	12	12	12	12	12	6	--	--	--	--
Excavator	120	2	6	15	--	--	10	--	--	--	--	--	--	--	--	--
Concrete pump truck	250	1	2	10	--	--	6	6	--	--	--	--	--	--	--	--
Concrete pump trailer	50	1	2	10	--	--	6	6	6	6	--	--	--	--	--	--
Light Plants	25	8	8	20	--	--	12	12	12	--	--	--	--	--	--	--
Air Compressor	50	4	8	20	--	--	12	12	12	--	--	--	--	--	--	--
Generator 200KW	175	1	8	20	--	--	12	12	12	12	12	2	--	--	--	--
Generator 150KW	120	1	8	20	--	--	12	12	--	--	--	--	--	--	--	--
Welder (trailer mtd)	50	5	4	15	--	--	12	12	12				--	--	--	--
Material Truck	250	4	2	15	--	--	12	12	12	12	12	4	--	--	--	--
Small soil tamper	15	3	4	15	--	--	12	12	12	--	--	--	--	--	--	--
Loader (skid steer)	50	3	6	20	--	--	12	12	12	--	--	--	--	--	--	--
Truck (tractor)	175	2	2	10	--	--	12		--	--	--	--	--	--	--	--
Manlift	25	4	8	20	--	--	12	12	--	--	--	--	--	--	--	--

Source: Reference 4.29.
Note: NA = not available.

Table 2.3-3: Non-Pit Plutonium Processing Construction Emissions

Non-Pit Construction Fugitive Emissions from Earthworks Activities (MT/year)												
Pollutant	**Year 1**	**Year 2**	**Year 3**	**Year 4**	**Year 5**	**Year 6**	**Year 7**	**Year 8**	**Year 9**	**Year 10**	**Year 11**	**Year 12**
Fugitive PM_{10}	0.00E+00	0.00E+00	1.99E+00	3.43E-01	0.00E+00	0.00E+00	0.00E+00	0.00E+00	0.00E+00	0.00E+00	0.00E+00	0.00E+00
Fugitive $PM_{2.5}$[a]	0.00E+00	0.00E+00	1.99E+00	3.43E-01	0.00E+00	0.00E+00	0.00E+00	0.00E+00	0.00E+00	0.00E+00	0.00E+00	0.00E+00

a. $PM_{2.5}$ emissions conservatively set equal to the PM_{10} emissions.

Non-Pit Construction Equipment Emissions from Demolition, Earthwork, Paving, and Construction Activities (MT/year)												
Pollutant	**Year 1**	**Year 2**	**Year 3**	**Year 4**	**Year 5**	**Year 6**	**Year 7**	**Year 8**	**Year 9**	**Year 10**	**Year 11**	**Year 12**
CO	0.00E+00	0.00E+00	6.93E+00	6.03E+00	3.80E+00	1.49E+00	1.19E+00	3.37E-01	0.00E+00	0.00E+00	0.00E+00	0.00E+00
NOx	0.00E+00	0.00E+00	1.11E+01	9.69E+00	5.39E+00	2.84E+00	2.42E+00	6.82E-01	0.00E+00	0.00E+00	0.00E+00	0.00E+00
VOC	0.00E+00	0.00E+00	1.99E+00	1.78E+00	1.12E+00	3.46E-01	2.87E-01	8.51E-02	0.00E+00	0.00E+00	0.00E+00	0.00E+00
SOx	0.00E+00	0.00E+00	1.40E-02	1.24E-02	7.28E-03	3.66E-03	3.09E-03	8.79E-04	0.00E+00	0.00E+00	0.00E+00	0.00E+00
PM_{10}	0.00E+00	0.00E+00	7.00E-01	5.90E-01	3.41E-01	1.48E-01	1.22E-01	3.75E-02	0.00E+00	0.00E+00	0.00E+00	0.00E+00
$PM_{2.5}$[a]	0.00E+00	0.00E+00	7.00E-01	5.90E-01	3.41E-01	1.48E-01	1.22E-01	3.75E-02	0.00E+00	0.00E+00	0.00E+00	0.00E+00
CO_2	0.00E+00	0.00E+00	1.19E+03	1.05E+03	6.05E+02	3.24E+02	2.73E+02	7.73E+01	0.00E+00	0.00E+00	0.00E+00	0.00E+00
CH_4	0.00E+00	0.00E+00	1.80E-01	1.60E-01	1.01E-01	3.12E-02	2.59E-02	7.68E-03	0.00E+00	0.00E+00	0.00E+00	0.00E+00

a. $PM_{2.5}$ emissions conservatively set equal to the PM_{10} emissions.

Non-Pit Construction On-Road Commuter Emissions (MT/year)												
Pollutant	**Year 1**	**Year 2**	**Year 3**	**Year 4**	**Year 5**	**Year 6**	**Year 7**	**Year 8**	**Year 9**	**Year 10**	**Year 11**	**Year 12**
CO	0.00E+00	0.00E+00	3.78E+00	5.83E+00	7.46E+00	7.77E+00	8.49E+00	6.48E+00	6.95E-01	3.97E-01	0.00E+00	0.00E+00
NOx	0.00E+00	0.00E+00	4.70E-01	7.07E-01	8.91E-01	9.08E-01	9.52E-01	7.06E-01	7.27E-02	3.99E-02	0.00E+00	0.00E+00
VOC	0.00E+00	0.00E+00	4.06E-01	6.35E-01	8.26E-01	8.75E-01	9.71E-01	7.55E-01	8.24E-02	4.78E-02	0.00E+00	0.00E+00
SOx	0.00E+00	0.00E+00	6.17E-03	1.02E-02	1.40E-02	1.57E-02	1.82E-02	1.48E-02	1.69E-03	1.02E-03	0.00E+00	0.00E+00
PM_{10}	0.00E+00	0.00E+00	2.91E-01	4.83E-01	6.61E-01	7.38E-01	8.63E-01	7.02E-01	8.00E-02	4.83E-02	0.00E+00	0.00E+00
$PM_{2.5}$	0.00E+00	0.00E+00	9.47E-02	1.57E-01	2.15E-01	2.41E-01	2.81E-01	2.29E-01	2.60E-02	1.57E-02	0.00E+00	0.00E+00
CO_2	0.00E+00	0.00E+00	6.36E+02	1.05E+03	1.44E+03	1.61E+03	1.88E+03	1.53E+03	1.74E+02	1.05E+02	0.00E+00	0.00E+00
CH_4	0.00E+00	0.00E+00	3.59E-02	5.58E-02	7.23E-02	7.60E-02	8.39E-02	6.48E-02	7.00E-03	4.05E-03	0.00E+00	0.00E+00

Table 2.3-3: Non-Pit Plutonium Processing Construction Emissions (continued)

Non-Pit Total Construction Emissions (MT/year)													
Pollutant	**Year 1**	**Year 2**	**Year 3**	**Year 4**	**Year 5**	**Year 6**	**Year 7**	**Year 8**	**Year 9**	**Year 10**	**Year 11**	**Year 12**	**Max Value**
CO	0.00E+00	0.00E+00	1.07E+01	1.19E+01	1.13E+01	9.26E+00	9.68E+00	6.82E+00	6.95E-01	3.97E-01	0.00E+00	0.00E+00	1.19E+01
NOx	0.00E+00	0.00E+00	1.16E+01	1.04E+01	6.28E+00	3.75E+00	3.37E+00	1.39E+00	7.27E-02	3.99E-02	0.00E+00	0.00E+00	1.16E+01
VOC	0.00E+00	0.00E+00	2.40E+00	2.41E+00	1.95E+00	1.22E+00	1.26E+00	8.40E-01	8.24E-02	4.78E-02	0.00E+00	0.00E+00	2.41E+00
SOx	0.00E+00	0.00E+00	2.01E-02	2.27E-02	2.13E-02	1.94E-02	2.13E-02	1.57E-02	1.69E-03	1.02E-03	0.00E+00	0.00E+00	2.27E-02
PM_{10}	0.00E+00	0.00E+00	2.98E+00	1.42E+00	1.00E+00	8.85E-01	9.85E-01	7.40E-01	8.00E-02	4.83E-02	0.00E+00	0.00E+00	2.98E+00
$PM_{2.5}$	0.00E+00	0.00E+00	2.78E+00	1.09E+00	5.57E-01	3.88E-01	4.03E-01	2.66E-01	2.60E-02	1.57E-02	0.00E+00	0.00E+00	2.78E+00
CO_2	0.00E+00	0.00E+00	1.82E+03	2.11E+03	2.05E+03	1.94E+03	2.15E+03	1.61E+03	1.74E+02	1.05E+02	0.00E+00	0.00E+00	2.15E+03
CH_4	0.00E+00	0.00E+00	2.16E-01	2.16E-01	1.74E-01	1.07E-01	1.10E-01	7.25E-02	7.00E-03	4.05E-03	0.00E+00	0.00E+00	2.16E-01

Source: Reference 4.14.

Table 2.3-4: Estimated Average Volumes of Construction Solid Waste

Waste Type	Cubic meters/year
TRU	0
LLW	220
MLLW	0
Hazardous	220
Non-hazardous	330

Source: Based on Reference 4.30.

2.3.2 Non-Pit Plutonium Operations

The AFS-2 material consists of both metal and oxide. Most of the AFS-2 material is already stored in 3013 containers in the K-Area storage area in 9975 shipping containers. The remaining AFS-2 material will be received and stored in the SRS K-Area. When this material is ready to be processed, the 9975 container is unpacked and the 3013 container loaded into the material entry hood. Both oxide and metal are sent to the DMO preparation glovebox where the 3013 containers are opened and the material removed. The AFS-2 metal is loaded into a DMO conversion drum, oxidized, and the product processed in the same manner as the pit oxide. AFS-2 material with high levels of impurities is campaigned to minimize contamination of the pit oxide since they share the OPH blender. The AFS-2 oxide is split into two separate screw lid convenience cans so that the subsequent containers meet the AFS impurity specifications. The oxide is sampled, and sent separately to product canning where it is packaged per DOE-STD-3013 (Reference 4.31). From there, it follows a similar path as the oxide produced from pit and AFS-2 metal.

The non-pit plutonium processing system descriptions in this section are taken from Reference 4.32 with modifications to reflect updated design.

Upon receipt of the non-pit plutonium at the processing glovebox, the incoming materials would be in the form of clean plutonium metal and oxides packaged predominantly in DOE-STD 3013 containers. These containers would be introduced into the glovebox room.

In the glovebox room, the AFS-2 3013 containers will enter the glovebox and will be opened. The metals will be oxidized and calcined. The 3013 oxides will be repackaged. All material will then be canned into a 3013 inner can, moved to the outer can welding room, and packaged into a 3013 outer can. From there, the containers will go through digital radiography, NDA, and 9975 packaging. The containers will be packaged for storage for eventual shipment to MFFF.

The Waste Management System will collect LLW and TRU waste generated from the non-pit plutonium processes and package the waste for staging prior to transfer to E-Area. At E-Area, the waste would be either dispositioned onsite or shipped to an offsite disposal location. Waste management activities would be located on the 0’ elevation within the 910-A area of the MAA and in the former Transformer Room 3.

The balance of plant utilities and services supporting the non-pit plutonium processing would utilize existing services (located either inside or outside the main process building) as well as new stand-alone services or facilities (such as breathing air, compressed gases, diesel generator, and administrative trailer(s).

2.3.2.1 Non-Pit Plutonium Process

The non-pit plutonium processing glovebox would provide DMO, stabilization, and 3013 inner can packaging capability. Additionally, a 3013 outer canning system would be included in an adjacent room. The current F/H Lab would perform sample analysis for processing to ensure MFFF specification compliance. The main non-pit plutonium processing functions and activities would be as follows:

- Convert non-pit plutonium metal to oxide and package the oxide in accordance with DOE-STD-3013.
- Prepare AFS-2 material for shipment to MFFF.
- Install a new glovebox line for the following process operations:
  - DMO with calcining
  - Stabilization
  - 3013 inner and outer canning

The glovebox line would also support other potential missions:

- Stabilization and repackaging of material from the KIS

Non-pit plutonium processing will require the following major process equipment:

- DMO and stabilization furnaces
- Robotic manipulator systems
- Active confinement ventilation system with HEPA filters
- Helium and argon inerting systems
- Engineered criticality safety system (CRSS)
- 3013 inner and outer cans
- Associated drop boxes, hoods, and airlocks
- 3013 can opener

Non-pit plutonium processing provides the capability to process the 3.74 MT of AFS-2 materials. AFS-2 oxides would be split, stabilized if necessary, sealed in 3013 inner and outer containers, packaged in 9975s, and stored for future shipment to MFFF. AFS-2 metals would be oxidized and stabilized in the DMO furnace, and subsequently canned, packaged, and stored for future shipment to MFFF.

The F/H Analytical Laboratory would support sample analyses. The laboratory mission would be limited to plutonium oxide samples. The following modifications to the lab would be necessary:

- Installation of a thermo-gravimetric analyzer with Fournier transform infrared (TGA-FTIR) capability in the glovebox for moisture analysis.
- Removal of equipment from the north portion (~60 percent) of the lab.
- Installation of three new gloveboxes and two radiohoods.
- Installation capability for:
  - Moisture (TGA-FTIR; 60 samples/year)
  - Dissolution (closed vessel microwave; 167 samples/year)
  - Impurities (inductively coupled plasma-mass spectrometry; 167 samples/year)
  - Use of existing F/H Laboratory capabilities for isotopics and RCRA/beryllium analysis

For the process operations, the following systems would be involved and would provide the stated functions:

Non-Pit Plutonium Processing – The work scope associated with the required modification within the K-Area facility for non-pit plutonium processing would accommodate the following:

- Glovebox – Modifications will include providing a shielded glovebox, airlocks, air hood, and associated equipment located within the glovebox (i.e., scales, can puncture device, 3013 can opener, and vacuum system). Associated HVAC connections, gas tie-ins, electrical glovebox connectors, and cables/controls/conduits will also be included.
- DMO – Modifications will include providing equipment for the metal oxidation process (i.e., a DMO furnace and associated controls/cables/supports, DMO furnace cooling system).
- Stabilization – Modifications will include providing equipment for the plutonium stabilization process (i.e., a stabilization furnace and associated controls/cables/supports).
- Inner Can Subsystem – Modifications will include providing equipment for the 3013 inner can welding process (i.e., inner can welder, an inner can leak detector system, and associated controls/cables/supports)
- Outer Can Processing - Modifications would include providing an automated 3013 outer can welder, radiological survey station, and associated leak detection equipment. Associated cables/conduits/supports and controls as well as tie-ins to compressed gases would also be included.

Waste Management - The work scope associated with the required modifications within the K-Area facility would provide a Waste Management System capable of handling waste generated by each process system. The Waste Management System would remove waste

from the generation point, perform the appropriate measurements, package waste, and prepare waste for shipment to the disposal location. The Waste Management System would include the following:

- A GRIS
- A high efficiency neutron counter
- A waste assay system
- Portable detection equipment
- An airhood (for drum loading)

2.3.2.2 Non-Pit Plutonium Non-Process Features

Demolition and Removal - D&R would be performed for selected retired structures, systems, and components (SSCs), and new systems that would be utilized by non-pit plutonium processing would be installed. The following key rooms would undergo D&R:

- Presentation, final storage, 910-A water seal on the 0' elevation in support of installation of the new walls and second floor
- -20' elevation under final storage for new structural supports
- Assembly basement

Heating, Ventilation, and Air Conditioning (HVAC) - The work scope associated with the required modification within and outside of the K-Area facility would include the following:

- Process Supply – Modifications would include providing air handling units, associated electrical power, controls and raceway/supports for the operation of process supply system, and a supply duct system to distribute conditioned air to the process areas. Process supply ductwork would include isolation dampers, tornado dampers, and electric duct heaters.
- Process Exhaust – Modifications would include providing exhaust fans units; associated electrical power, controls, and raceway/supports for operation of the process exhaust system; and an exhaust duct system to exhaust air from the process areas to the exhaust stack. Process exhaust ductwork would include tornado dampers, isolation dampers, and blast gate dampers.
- Glovebox Exhaust – Modifications would include providing a glovebox exhaust system consisting of HEPA filter assemblies (including inlet and outlet dampers) and glovebox exhaust fan units. A glovebox exhaust ductwork system (to process exhaust) and associated electrical power/cable/raceways/controls/supports necessary for operation of the glovebox exhaust system would also be included.
- Non-Process HVAC – Modifications would include providing heating and/or cooling (as needed) for the non-process areas.

The HVAC airflow is shown in Figure 2.3-1. Emissions from processing non-pit plutonium material would be from a new roof stack adjacent to the current KIS stack. The stack would be 80 ft tall and 2 ft in diameter; flow rates would be 8,000 cubic feet per minute (cfm), 3,000 ft per minute.

Structures and Buildings - The work scope associated with the required modifications within the K-Area main building would provide interior structures and infrastructure to shelter all interior processes, personnel, systems, equipment, and circulation spaces associated. Modifications would include confinement, passive fire barriers, and life safety egress features and would accommodate the following:

- K-Area Main Building – Modifications would include providing:
  - Reinforced concrete walls
  - New openings/core drills in existing concrete walls (for HVAC ducts, cable trays, piping, and conduits)
  - Air- and fire-rated penetration seals
  - Upgraded walls and floor slabs and floors/ceilings (to meet building and life safety codes)
  - 3-hr fire separation barriers
  - A vertical lift
  - Equipment slab for a waste assay system
  - Personnel doors
  - Blockouts in new concrete
  - Concrete curbs/ramps (for fire water collection)
  - Egress stairways
  - Security physical barriers and security doors
  - Embeds in new concrete for support attachments
  - Fire-rated and non-fire-rated metal studs w/ gypsum wallboard
  - New airlocks and walls
  - Monorails
  - Columns to physically support 0’ elevation new walls and floors

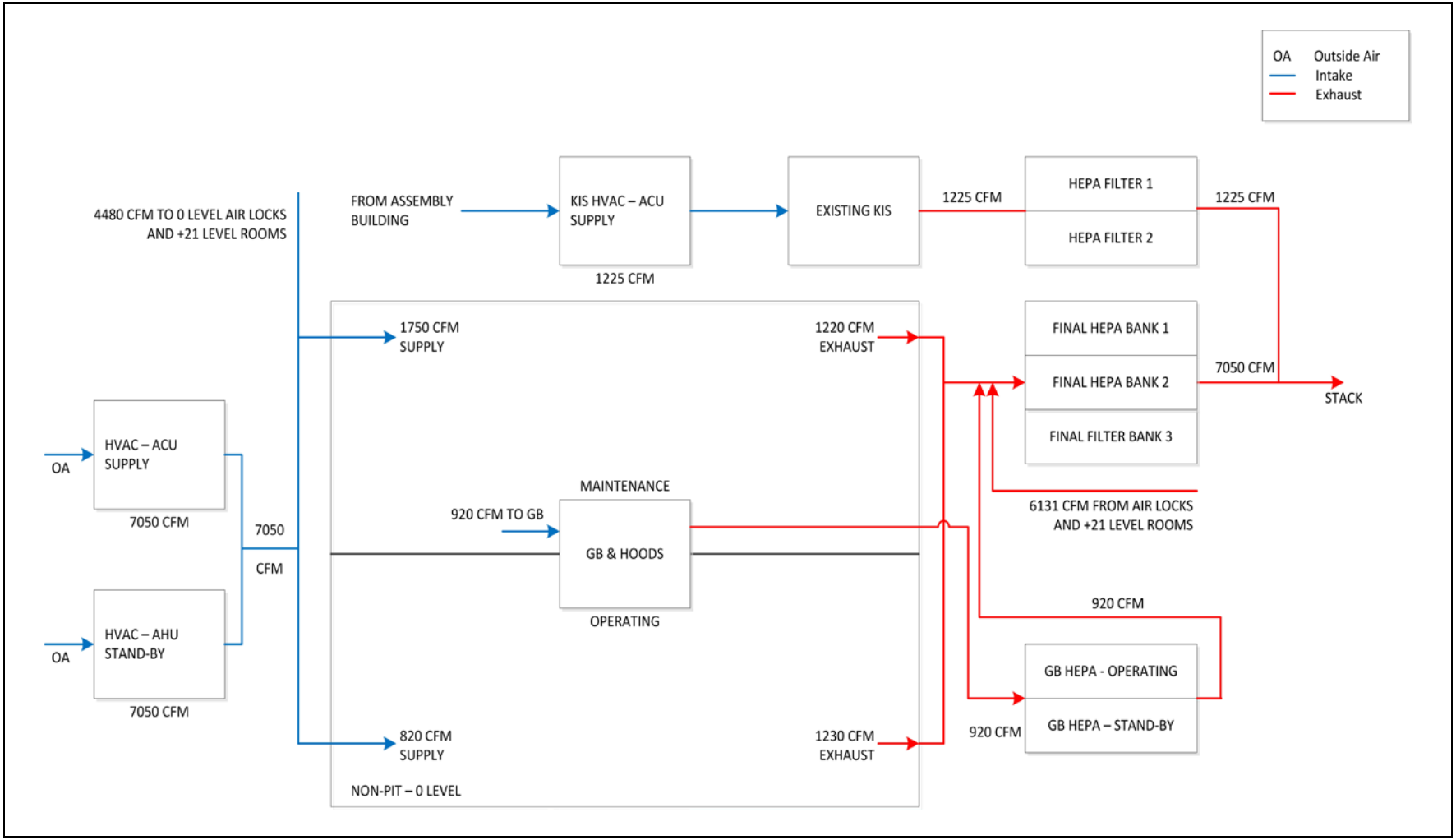

Source: Reference 4.33.

Figure 2.3-1: Non-Pit Plutonium HVAC Airflow

Health and Safety Monitoring - The work scope associated with the required modifications within the K-Area main building would accommodate the following:

- Personnel Monitoring – Modifications would include providing fixed radcon equipment to support non-pit plutonium processing mission needs (e.g., personnel contamination monitors, count rate meters, etc.). All (fixed) dedicated utilities (electrical and gas systems) required to support radcon monitoring and room oxygen monitors [for Product Canning and Plutonium Handling systems area (near welder)] would also be included, as well as associated cables/conduits/supports and controls.
- Airborne Radioactivity Monitoring – Modifications would include providing fixed continuous air monitor (CAM) instruments for the non-pit plutonium processing. Also included would be CAM components, relay panels, alarms (horns/flashing lights), local acknowledge controls, associated powered/control/signal interface wiring, and dedicated raceways for service to CAM-related equipment/components. Fixed retrospective air samplers and a dedicated Rad Protection Air Sampling Vacuum System will also be used.
- Portable Radcon Equipment – Modifications would include providing necessary calibration sources for radiation monitoring equipment, hand friskers, blowers, sampling pumps, and other necessary equipment to support radcon operations.
- Nuclear Incident Monitor (NIM) – Modifications would include providing fixed NIM instruments (i.e., NIM components, relay panels, NIM alarms [bells/flashing lights]), associated power and control interface wiring, and grated enclosure/stand(s) for the NIMs.

Fire Detection, Suppression and Water Collection System – Modifications would include installation of fire detection and gaseous fire suppression for the process areas and automatic wet pipe fire suppression systems in the -20’ and -40’ elevation rooms, including fire detection systems. Fire Suppression is required in all Material Storage Areas and the receiving dock areas. The fire suppression system types to be utilized will be automatic water-based fire suppression using National Fire Protection Association (NFPA) 13, *Installation of Automatic Sprinkler Systems* or NFPA 750, *Standard on Water Mist Systems* depending on the system classification and the area hazards. FM-200 gaseous fire suppression will be used in areas where safety class suppression is required.

Compressed Gas, Water & Air Systems - additions associated with non-pit plutonium processing would be limited to a compressed gas bottle storage shed immediately outside and a new breathing air compressor and associated equipment with air distribution piping and breathing air stations in the new process area. A dedicated packaged chiller would be required to cool the process.

2.3.3 Air Emissions From Non-Pit Plutonium Operations

Two small diesel generators would be used during non-pit plutonium processing operations: a 100-kilowatt (kW) generator to support processing operations, and a 300-kW generator to support safeguards and security needs. The calculated emissions for these generators are based on 500 hrs of operations to provide a conservative estimate of air emissions. The estimated annual average consumption of diesel fuel during non-pit plutonium processing operations is 14,500 gallons (Reference 4.22). The estimated non-pit plutonium processing diesel generator emissions are shown in Table 2.3-5. Radiological and non-radiological air emissions from the F/H Laboratory are estimated in Table 2.3-6.

2.3.4 Project Schedule and Staffing

The schedule duration includes D&R activities to be initiated in K-Area, and allowance for long lead procurements to be developed. Construction activities resulting in emissions are anticipated to occur over eight years. D&R will include the assembly basement and the 910-A water seal. The non-pit plutonium processing workforce is anticipated to be approximately 90 staff (Reference 4.34).

2.4 PDC Project

DOE would install equipment and perform operations in K-Area main building necessary to perform the functions associated with processing of pits. The discussion in this section provides details on the PDC design that includes multiple support buildings without increasing the size of 105-K. Figure 2.4-1 shows the existing K-Area main building, with new support structures in the compound adjacent to 105-K designated with cross-hatching. While processing of non-pit plutonium would occur in a DMO glovebox that serve the overall PDC project the construction impacts indentified in this section only pertain to the processing of pits associated with the PDC Project. Non-pit impacts are indentified in Sections 2.3 and 3.0.

As required by DOE Order 413.3B, capital line items with escalating costs are required to reassess the alternative selection process. In November 2009, an Alternative Study, Y-AES-K-00002 (Reference 4.2), identified the feasibility of combining two projects—the PDCF and the non-pit plutonium processing—into one project located in K-Area as a potentially more cost-effective approach over the continued parallel paths both projects were pursuing. This combined capability is referred to as the PDC Project.

Table 2.3-5: Non-Pit Plutonium Processing Diesel Generator Emissions

Condition/Pollutant	Non-Pit Operations	Safeguards & Security	Total
Diesel Size (kW)	100	300	--
Fuel Usage (gal/hr)	7.4	21.5	--
Btu/Gal Fuel	139,200	139,200	--
Hours/year Operation	500	500	--
Criteria Pollutant (MT/year)			
NOx	1.03E+00	2.99E+00	4.02E+00
CO	2.22E-01	6.45E-01	8.67E-01
SOx	6.77E-02	1.97E-01	2.65E-01
CO_2	3.83E+01	1.11E+02	1.50E+02
PM	7.24E-02	2.10E-01	2.83E-01
PM_{10}	7.24E-02	2.10E-01	2.83E-01
$PM_{2.5}$	7.24E-02	2.10E-01	2.83E-01
VOC	7.65E-02	2.22E-01	2.99E-01
Methane	7.57E-03	2.20E-02	2.96E-02
Pb	3.64E-05	1.06E-04	1.42E-04
Hazardous Air Pollutant (kg/year)			
Benzene	2.18E-01	6.33E-01	8.51E-01
Toluene	9.55E-02	2.78E-01	3.74E-01
Xylenes	6.66E-02	1.93E-01	2.60E-01
Propylene	6.03E-01	1.75E+00	2.35E+00
1,3-Butadiene	9.13E-03	2.65E-02	3.56E-02
Formaldehyde	2.76E-01	8.01E-01	1.08E+00
Acetaldehyde	1.79E-01	5.21E-01	7.00E-01
Acrolein	2.16E-02	6.28E-02	8.44E-02
Naphthalene	1.98E-02	5.76E-02	7.74E-02
Acenaphthylene	1.18E-03	3.43E-03	4.61E-03
Acenaphthene	3.32E-04	9.64E-04	1.30E-03
Fluorene	6.82E-03	1.98E-02	2.66E-02
Phenanthrene	6.87E-03	2.00E-02	2.69E-02
Anthracene	4.37E-04	1.27E-03	1.71E-03
Fluoranthene	1.78E-03	5.17E-03	6.95E-03
Pyrene	1.12E-03	3.24E-03	4.36E-03
Benzo(a)anthracene	3.92E-04	1.14E-03	1.53E-03
Chrysene	8.25E-05	2.40E-04	3.23E-04
Benzo(b)fluoranthene	2.32E-05	6.73E-05	9.05E-05
Benzo(k)fluoranthene	3.62E-05	1.05E-04	1.41E-04
Benzo(a)pyrene	4.39E-05	1.28E-04	1.72E-04
Indeno(1,2,3-cd)pyrene	8.76E-05	2.55E-04	3.43E-04
Dibenz(a,h)anthracene	1.36E-04	3.96E-04	5.32E-04
Benzo(g,h,l)perylene	1.14E-04	3.32E-04	4.46E-04
TOTAL PAH	3.92E-02	1.14E-01	1.53E-01

Source: Reference 4.22.

Table 2.3-6: F/H Laboratory Emissions

Area	Emission Point	Building	Pollutant Name	Abated (tpy)	Abated (MT/year)
Criteria Pollutants					
F	QP0018	772000	Total PM	6.93E-04	6.29E-04
F	QP0018	772000	VOC (Ozone Precursors)	7.81E-02	7.09E-02
Area	**Emission Point**	**Building**	**Pollutant Name**	**Abated (tpy)**	**Abated (kg/year)**
Hazardous Air Pollutants					
F	QP0018	772000	Hydrogen Fluoride	2.34E-05	2.12E-02
F	QP0018	772000	Hydrochloric Acid (Hydrogen Chloride)	1.15E-07	1.04E-04
F	QP0018	772000	Methyl Alcohol (Methanol)	1.55E-02	1.41E+01
F	QP0018	772000	Nitric Acid	1.11E-02	1.01E+01
F	QP0018	772000	Potassium Permanganate	2.08E-25	1.89E-22
F	QP0018	772000	Potassium Thiocyanate	1.78E-05	1.61E-02
F	QP0018	772000	Toluene	4.33E-04	3.93E-01
F	QP0018	772000	Xylene (P-)	1.34E-04	1.22E-01
Area	**Emission Point**	**Building**	**Pollutant Name**	**Abated (tpy)**	**Abated (kg/year)**
Air Toxic Pollutants					
F	QP0018	772000	Ammonium Chloride	1.06E-26	9.60E-24
F	QP0018	772000	Phosphoric Acid	7.44E-04	6.75E-01
F	QP0018	772000	Sodium Hydroxide (Caustic Soda)	6.74E-26	6.11E-23
F	QP0018	772000	Sulfuric Acid	2.26E-05	2.05E-02
Area	**Emission Point**	**Building**	**Pollutant Name**	**Abated (tpy)**	**Abated (Ci/year)**
Radionuclides					
F	QP0018	772000	Cs-137	--	5.97E-09
F	QP0018	772000	Sr-90	--	8.30E-09
F	QP0018	772000	U-234	--	1.58E-09
F	QP0018	772000	U-235	--	7.99E-10
F	QP0018	772000	U-238	--	1.57E-09
F	QP0018	772000	Pu-238	--	7.61E-10
F	QP0018	772000	Pu-239	--	1.73E-09
F	QP0018	772000	Am-241	--	5.43E-10
F	QP0018	772000	Cm-244	--	3.26E-11
F	QP0018	772000	Gross Beta	--	1.06E-07
F	QP0018	772000	Gross Alpha	--	2.06E-09

Source: Reference 4.35.
Note: tpy = tons per year; Ci = curies.

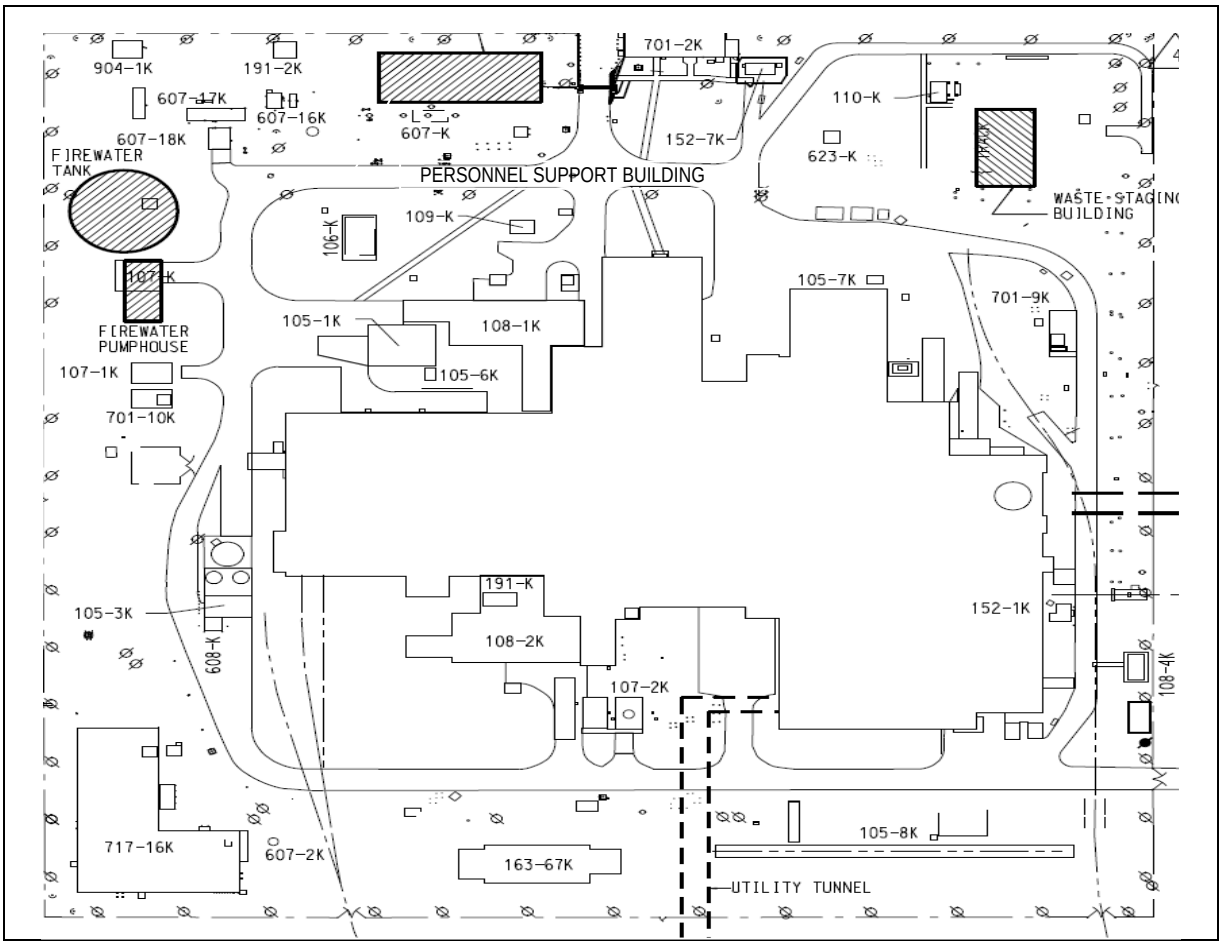

Source: Reference 4.36.

Figure 2.4-1: Main Processing Building at K-Area

The PDC Project would provide:

1. The stabilization/packaging capability of the non-pit plutonium processing and the pit disassembly and conversion capability of the PDCF Project.

2. An early, available surplus pit and clean metal storage capability that could eliminate the need for a new interim storage vault or other new storage capability at Pantex. This early surplus pit storage capability at SRS could provide a sound risk mitigation strategy should additional pressures to reduce Pantex stockpile and weapons dismantlement continue, as well as provide cost savings to the Defense Programs by allowing Pantex to consolidate all SNM.

Because the PDC Project would not utilize all of the available space within the existing facility nor within the protected area, opportunities for other DOE missions to take advantage of this existing infrastructure would be possible. The PDC Project would also utilize a long-term

qualified and trained workforce available for other SNM missions. It is anticipated that the PDC workforce would be approximately 500 staff on an average basis (Reference 4.34).

2.4.1 Facility Construction

Outside of the K-Area main building, the proposed PDC Project would affect 30 acres for the new mission. The total project footprint following construction would be 18 acres (five acres occupying a previously disturbed footprint and 13 acres occupying a newly disturbed footprint). Of the 30 acres, five acres are estimated to be clearing of currently forested areas (grubbing) and three acres are estimated for the retention basins. (Reference 4.37)

2.4.1.1 Civil/Structural/Architectural

The primary function of the civil/structural/architectural modifications required inside the K-Area main building would be to provide interior structures and infrastructure to shelter all interior processes, personnel, systems, equipment, and circulation spaces associated with the PDC Project. The scope would include position retention, confinement, passive fire barrier, and life safety egress.

Modifications would include the addition of a new floor at the +31' elevation above the existing K-Area Material Storage (KAMS) area, and a new floor at the +16' elevation at the assembly area. A new ECF would be added at the assembly area. Modifications would include the addition of change rooms, rest rooms and showers, office rooms, new equipment rooms, and rooms for security personnel. Also included in this scope would be newly cut holes and doorways in the existing concrete structure.

2.4.1.1.1 Fire Detection, Suppression, and Water Collection System

Unless otherwise indicated, the description of the Fire Detection, Suppression, and Water Collection System in this section is taken from Reference 4.38.

Fire detection and automatic wet-pipe suppression systems would be installed in the remaining portions of the PDC Project interior facility areas and outside facilities (e.g., chiller building and fan house). The gaseous fire protection system that was planned to be installed during non-pit plutonium processing would be replaced. At the 0' elevation, two sets of fire protection and detection equipment would need to be installed to accommodate a false ceiling separating the process equipment from the piping/wiring. The work would also cover an interior water collection system needed to collect discharged fire suppression water.

The K-Area would be provided with a dedicated, looped, underground Fire Water Supply System (FWSS). The FWSS would be provided with one electric-driven and one diesel-driven fire pump, each rated at 2,500 gal per minute at 140 lbs per square inch. The fire pumps would take suction from a 500,000-gal, on-grade fire protection water tank. The pumps would discharge into a 12–inch, underground piping network. The fire water tank and Pumphouse are located south of the PIDAS. A new (redundant) firewater tank and Pumphouse are planned to be constructed on the west side of the 105-K building. The existing FWSS system design includes a total of 27 fire hydrants strategically located throughout the K-Area.

Fire suppression would be required in all Material Storage Areas and the receiving dock areas. The fire suppression system types to be utilized would be automatic water-based fire suppression using NFPA 13, Installation of Automatic Sprinkler Systems, or NFPA 750, Standard on Water Mist Systems, depending on the system classification and the area hazards. The proposed safety classification for these areas would be safety significant except in the NDA/shuffler room and the CRT/CPA area, where the fire suppression system would be designated as safety class because of the material at risk (MAR) in conjunction with the combustible loading.

All areas used for PDC would be required to be protected by fire suppression in accordance with DOE 420.1B, Facility Safety. Depending on the type of systems installed, the system would be installed in accordance with NFPA 13, Installation of Automatic Sprinkler Systems, or NFPA 750, Standard on Water Mist Systems. The expected functional classification of the areas would be safety significant.

FM-200 systems would be switched over to a water-based fire suppression system for the non-pit plutonium processing area and material storage areas. The areas would also have the piping for the water-based suppression system installed for convenience but would not be activated or functional until the sand filter came on line.

All support facilities would have a wet-pipe fire suppression system installed that would comply with NFPA 13, Installation of Automatic Sprinkler Systems. This system would be fed from the K-Area Fire Water System. It is anticipated that the fire sprinkler systems used to protect the fan house and diesel generator buildings would be designated as safety significant systems.

F/H Lab - All of the renovation scope would be in 772-F; this facility currently meets the requirements of the standard. Accordingly, major upgrades to the 772-F fire detection and suppression system would not be required. New gloveboxes would require installation of fire detection and/or suppression in accordance with the standard, but no further upgrade requirements would be expected. (Reference 4.2)

2.4.1.1.2 Safeguards & Security System

The quantity of plutonium contained in these materials dictates that they be subjected to the same safeguards and security requirements as materials that could be used in nuclear weapons. Therefore, intersite shipments would be made in SST/SGTs, while intrasite transportation could require temporary road closures while the material was moved from one area of the site to another. This practice would provide all needed security and mitigate potential risk to the public.

The PDC Project would have appropriate security features at both the processing building at K-Area and the F/H Lab in F-Area. To ensure that SNM stored and processed inside was adequately protected, physical barriers; access control systems; detection and alarm systems; procedures (including the two-person rule, which requires at least two people to be present when working with SNM in the facility); and personnel security measures (including security clearance investigations and access authorization levels) would be used.

Nuclear material control and accountability would be ensured through a system that monitored storage, processing, and transfers. Closed-circuit television, intrusion detection, motion

detection, and other automated material monitoring methods would be employed as part of the Material Control and Accountability (MC&A) program. At any time, the total amount of SNM in each facility, or in any material balance area within a specific facility, would be known. Physical inventories, measurements, and inspections of material both in process and in storage would be used to verify inventory records.

The work would cover modification of the interior Facility Electronic Safeguards & Security System, material monitoring and video surveillance systems, intrusion detection system, and access control system.

The effort would include the installation of new material safeguards and physical security systems to control access to the new process rooms.

Currently, F/H Laboratory operates as a Category IV security facility and is part of the F-Area Property Protection Area. The laboratory anticipates needing to transition from Category IV to Category III based on anticipated new mission scope, including, but not necessarily limited to, the PDC Project. The F/H Laboratory could accept up to 700 grams of plutonium oxide (equivalent) from the PDC Project and an additional 1,100 grams of plutonium oxide (equivalent) from future new missions, and remain a Category III facility. The evaluation of rollup from a Category III quantity of SNM to a Category II quantity within F/H Laboratory was determined not to be credible based on the anticipated configuration and dispersion of material. (Reference 4.2)

2.4.1.1.3 Heating, Ventilation, and Air Conditioning (HVAC)

The description of the HVAC system in this section is taken from Reference 4.2.

The primary function of the HVAC system in the PDC Project portion of the facility would be to provide active confinement ventilation for process areas inside to minimize the spread of potentially radioactive contaminants within the facility, maintain personnel exposure as low as reasonably achievable, and prevent the release of radioactive material to the public and environment for postulated accidents. The HVAC system would also provide environmental control for the health, safety, and comfort of the operating personnel and for equipment protection.

The non-pit plutonium processing HVAC System would be replaced by a new system that would route all building exhaust through a new sand filter (Figure 2.4-2). This new HVAC System would include installing building exhaust ductwork, including a concrete exhaust tunnel to the new sand filter.

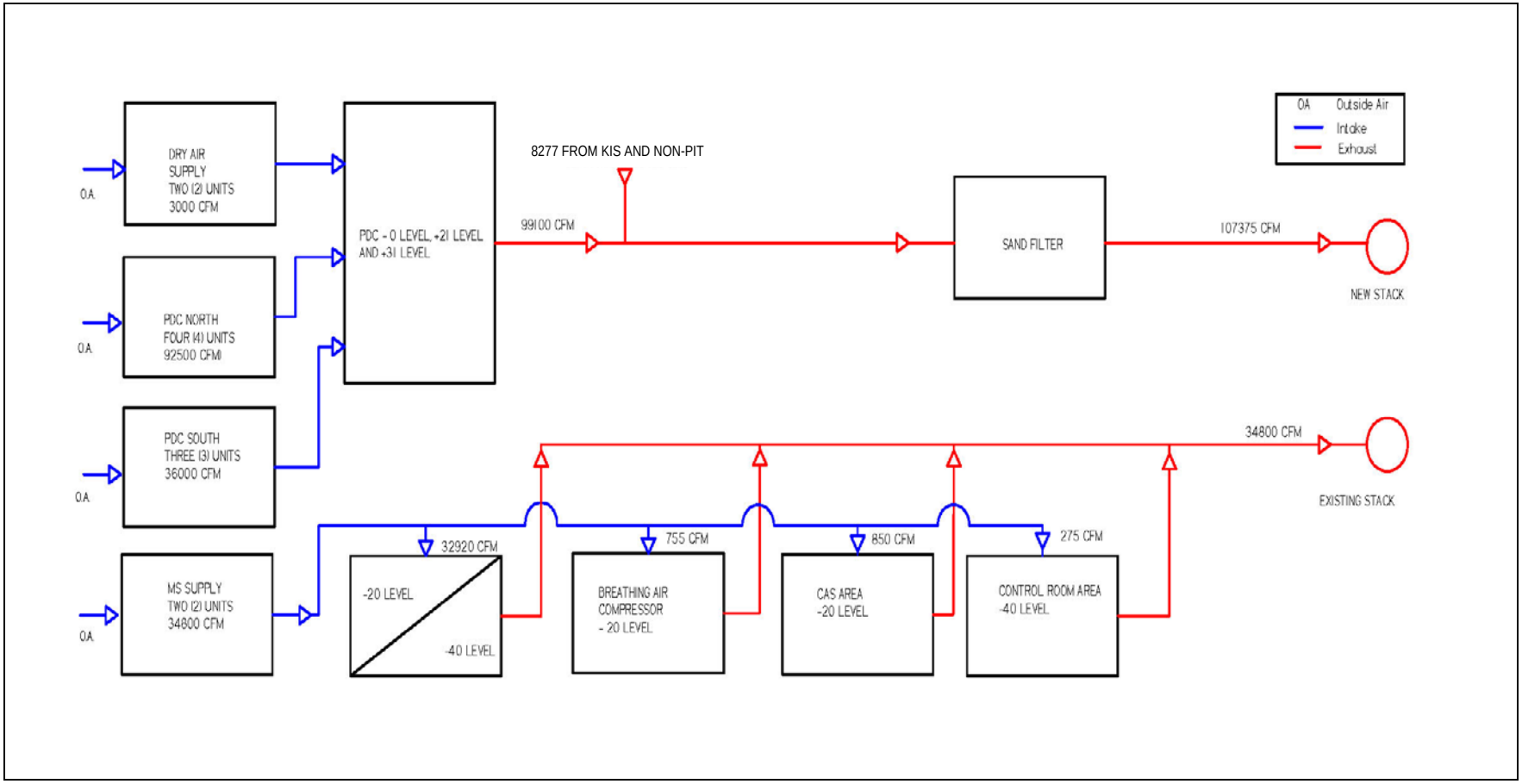

Source: Reference 4.39.

Figure 2.4-2: HVAC System for all PDC Airflow

Other major equipment in the HVAC system would include supply air handling units, glovebox exhaust fans, and building exhaust fans (these are located in the Fan House).

The HVAC system would include the following four principal subsystems:

- Process supply
- Process exhaust
- Glovebox exhaust
- Non-process / administrative area HVAC (for non-process areas inside and outside of the K-Area main building)

F/H Laboratory Engineering performed a preliminary evaluation of the impact of the projected renovation scope on the 772-F Main Exhaust and Off-Gas Exhaust systems. The renovation scope would result in approximately the same number of radiohoods and radiobenches and would reduce the total number of gloveboxes in the affected laboratories. Accordingly, the preliminary evaluation suggests no major impacts to the 772-F exhaust systems. During conceptual design, additional work would be required, considering the location of containment units, routing and sizing of ductwork, impacts to the high activity drain system, and overall facility air balance.

2.4.1.1.4 Compressed Gas, Water, and Air Systems

The description of the compressed gas, water, and air systems in this section is taken from Reference 4.2.

These systems' scope covers compressed gas supply systems (e.g., argon, helium, P10, etc.), chilled water system, and air supply systems (breathing air and instrument air) in support of PDC Project operations. The work scope excludes chillers, cooling towers, and associated chiller equipment (pumps, tanks, panels, etc.), which are addressed in Section 2.4.1.2.9.

New instrument/plant air compressors and an additional breathing air compressor would be installed with related equipment (receivers, dryers, purifiers) and air piping distribution and stations. Compressed gas bottle storage and gas distribution manifolds would be located in an outdoor structure. Helium supply tube trailers and liquid nitrogen and liquid argon storage tanks with associated evaporators would also be located outside on a concrete pad with hook-ups to distribution piping routed to the process areas.

2.4.1.1.5 Electrical and Telecommunication Systems

The description of the electrical and telecommunication systems in this section is taken from Reference 4.2.

The electrical system consists of electrical power distribution for the PDC Project facility, which includes the following five principal subsystems:

- Normal power distribution
- Standby power distribution

- Emergency power distribution
- Lighting/power outlets distribution
- Lightning protection/grounding

All electrical distribution systems modification (i.e., 13.8 kilovolts [kV], 480 Y/277 volts [V], 208 Y/120 V) are included in this scope. Typical major equipment in this system would include motor control centers (MCCs), UPS units, transformers, lighting/power panels, and unit substations.

The telecommunication systems include upgrades to the public address system and telephone systems and connection to the existing SRSnet and hardwired Protected Transmission System.

2.4.1.1.6 Health and Safety Monitoring System

The description of the health and safety monitoring system in this section is taken from Reference 4.2.

The health and safety monitoring system would provide the capability to monitor radiological and nonradiological hazards and provide notification of conditions for the safety and health of operating personnel. The health and safety monitoring system would consist of the following subsystems, which would be installed for the PDC Project:

- CAM system
- Personnel contamination monitoring system
- NIM system

2.4.1.2 Outside Facility Descriptions

This set of facilities would involve purchasing and installing administration trailers and change room/rest room trailers inside the PIDAS. The scope also would involve providing utility (electrical, water and sanitary sewer) tie-ins and communication tie-ins. Table 2.4-1 lists the buildings associated with the overall PDC Project and the area of those buildings.

2.4.1.2.1 Operations and Engineering Center (OEC)

The OEC would be the main administrative support building for the project. It would be a three story building with approximately 100,000 ft^2 of office space (Reference 4.40). Figure 2.4-3 shows the location of the OEC.

Table 2.4-1: Locations and Sizes of PDC Project Buildings

Name	Location	Area (ft^2)
Project Administrative Complex	K-Area	50,000
Craft Support Building	K-Area	12,000
Construction Admin Building	K-Area	10,000
Construction ECF	K-Area	400
Personnel Building	K-Area	5,750
Diesel Generator	K-Area	N/A
F/H Lab Modification for Non-Pit	F-Area	2,000 internal to building
Non-Pit Plutonium Processing	K-Area Main	50,430
Material Storage	K-Area Main	22,400
PDC Project Material Warehouse	K-Area	20,000
OEC	K-Area	57,000
Glovebox Assembly Building	K-Area	82,500
Safeguards and Security Generator	K-Area	N/A
Substation Building	K-Area	6,961
Switchgear Building	K-Area	560 Each (2)
Firewater Pump House	K-Area	1,580
Firewater Tank	K-Area	5,026
Nitrogen and Argon Gas Bottle Storage	K-Area	3,994
Emergency Generators	K-Area	2 generators 1,900 each
Diesel Storage	K-Area	2 diesel storage 1,200 each
Sand Filter	K-Area	53,750
Waste Staging Building	K-Area	3,147
Utility Building	K-Area	15,525
Fan House Building	K-Area	8,140
Pit Processing	K-Area Main	150,000
F/H Lab Modification for PDC	F-Area	6,000 internal to building

Source: Reference 4.41.

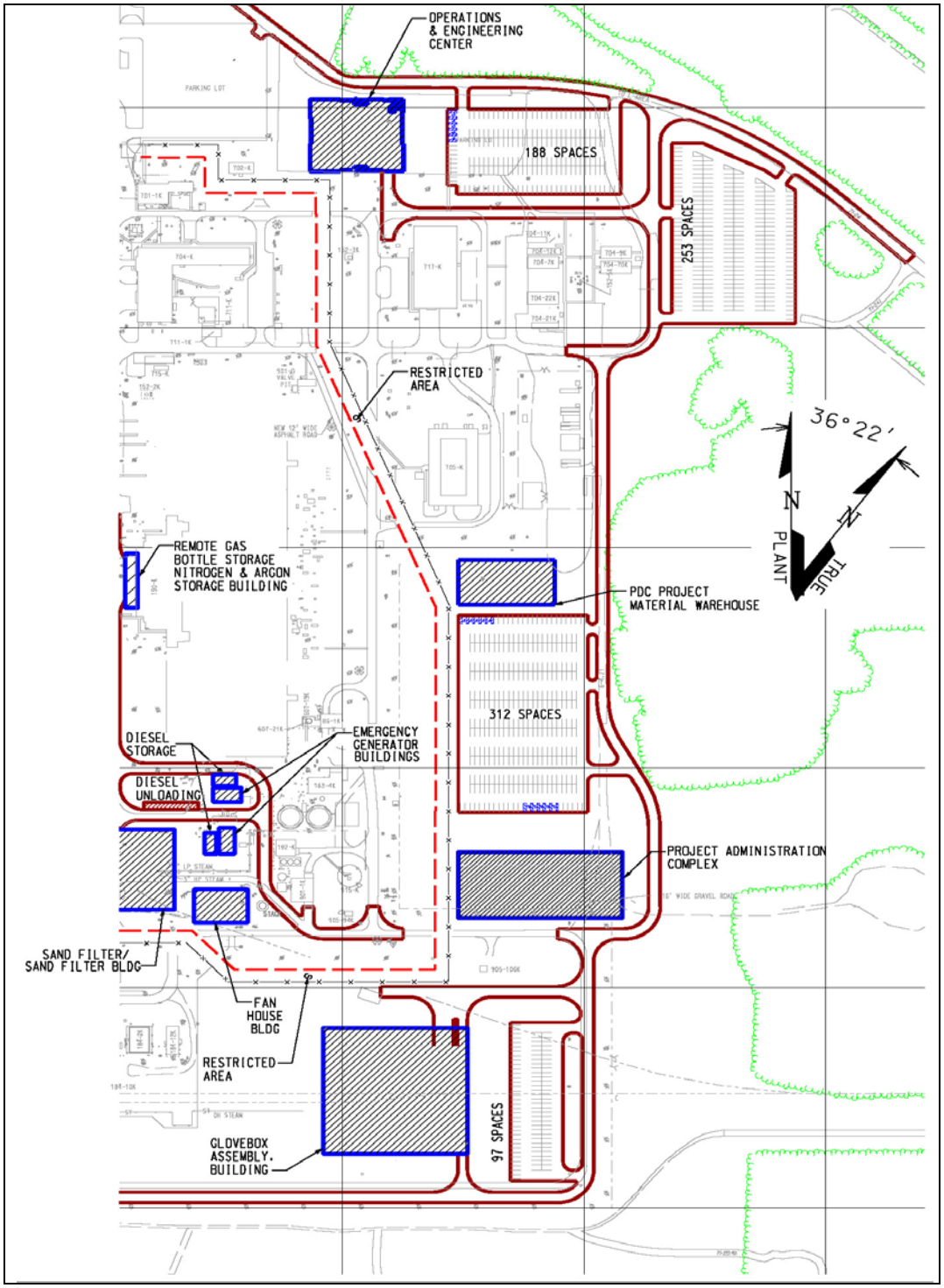

Source: Reference 4.42.

Figure 2.4-3: Eastern Portion of K-Area

2.4.1.2.2 Diesel Generator Buildings

The description of the diesel generator system in this section is taken from Reference 4.2).

The diesel generator system would include the emergency diesel generators and related equipment within the Fan House. The system would also have standby diesel generators with standby diesel fuel tanks, which would be located within a pre-engineered metal Diesel Generator Building (see Figure 2.4-3). The system would include the emergency diesel fuel tanks and fuel unloading station, which would be located in the diesel fuel unloading and storage structures. Diesel fuel would be stored in partially buried vaults to allow for monitoring of equipment and containment of any spills.

The estimated PDC Project diesel generator sizes and emissions are the same as that designed for PDCF and are shown in Table 2.2-7. The operation of the generators will be limited to 100 hours per year for testing. As a conservative measure, the emissions for these generators are based on 500 hours per year.

2.4.1.2.3 Waste Staging Building

The Waste Staging Building (see Figure 2.4-1) would provide a staging area for TRU and LLW containers awaiting pick-up. There would be no administrative offices in this structure. TRU waste would be contained in drums and LLW would be loaded in B-25s.

2.4.1.2.4 Sand Filter

The description of the Sand Filter Facility in this section is taken from Reference 4.2.

The Sand Filter facility (Figure 2.4-4) would be built outside where the present cooling basins and pump house are located. The Sand Filter would filter potentially contaminated building exhaust flow from the process areas. The Sand Filter is estimated to have 45,000 ft^2 of filter area. Grounding, lightning protection, and lighting/receptacles would be provided with this facility as well as contamination monitoring devices (as required). No additional soil remediation would be expected to be required. Installation of the filter facility would include purchase, testing, and installation of the sand filter media. No credit is taken for the sand filter in the emission calculations.

2.4.1.2.5 Stack

The description of the exhaust stack in this section is taken from Reference 4.2.

The exhaust stack would be built adjacent to the new Fan House (Figure 2.4-4). All of the PDC process areas' building exhaust would be discharged through the stack after passing through the Sand Filter and the building exhaust fans located in the Fan House. This scope would include site preparation and foundation design. The metal stack is estimated to be 96 inches in diameter and 80 ft tall. Also included would be a stack monitoring system, grounding, lightning protection and aircraft warning lights, and maintenance access. A sample probe would be provided at 45 ft above ground elevation.

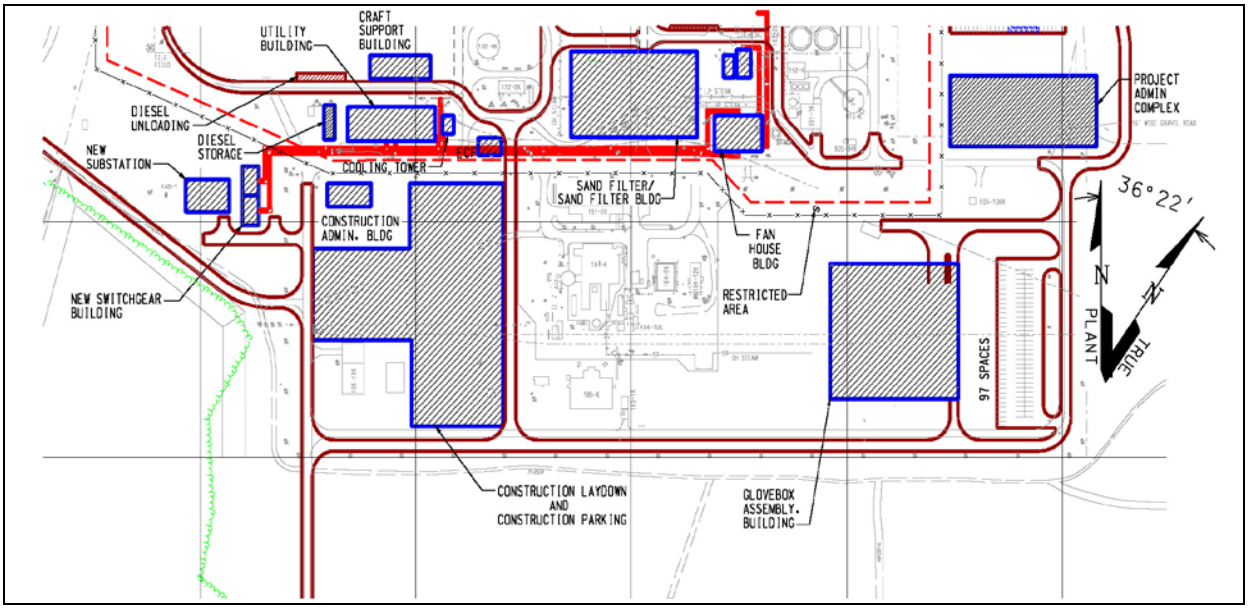

Source: Reference 4.43.

Figure 2.4-4: Southern Portion of K-Area

2.4.1.2.6 Fan House and Diesel Fuel Unloading/Storage

The description of the Fan House and diesel fuel unloading and storage structures in this section is taken from Reference 4.2.

A new Fan House (see Figure 2.4-4) and diesel fuel unloading and storage structures would be erected east and west of the sand filter (see Figures 2.4-3 and 2.4-4). These structures would be primarily concrete structures with concrete and metal stud/gypsum board interior walls. These facilities would include concrete embeds, lighting, grounding, and power receptacles. Site preparation and foundation design would not require additional soil remediation. Equipment and systems that would be located in the Fan House and in the diesel fuel unloading and storage structures would be provided by the HVAC, electrical, and diesel building systems.

2.4.1.2.7 Glovebox Assembly Building

The Glovebox Assembly Building (see Figure 2.4-4) would be built southeast of the Sand Filter. This facility would be used to fabricate all of the Pit Processing process gloveboxes. This facility would have some administrative offices. An overhead crane would be used in the fabrication area to lift the assembled units (Reference 4.44). Once fabrication of the gloveboxes was complete, this facility would be used as a material warehouse for Pit Processing.

2.4.1.2.8 ECF and PIDAS

The description of the ECF and PIDAS in this section is taken from Reference 4.2.

The existing ECF would be modified to add more lanes for the additional personnel load. The PIDAS would also require some modifications to accommodate the new facilities.

2.4.1.2.9 Chiller Building and HVAC Cooling Towers

The description of the Chiller Building and HVAC cooling towers in this section is taken from Reference 4.2.

This system would include a Chiller Building for process chilled water located inside the PIDAS, south of the main building; the HVAC cooling towers (see Figure 2.4-4) outside the PIDAS, south of the new Sand Filter; and HVAC chillers on the roof.

The Chiller Building would be a pre-engineered metal building with an electrical panel room/operations support area, ventilation fans, louvers, electric unit heaters and air conditioning unit, piping, valves, power/signal, wiring, raceways/cable trays, and controls (MCCs, programmable logic controller) required for the chiller building, chilled water system. Grounding, lighting/receptacles, and lightning protection would be included.

2.4.2 Site Preparation Scope

The discussion of site preparation activities in this section is taken from Reference 4.2.

2.4.2.1 Civil Site Work

Civil site work would cover the civil modifications that would be performed for the PDC Project facility. These modifications would include providing all labor, equipment, materials, and services necessary to execute site work required for the installation of the PDC Project facility. Required site work would consist of investigation of site conditions; temporary and permanent erosion control; site preparation; excavation and backfill; installation of concrete pads; installation of access walkways, driveways, and parking areas; installation of utilities; and final grading and ground cover.

2.4.2.2 Underground Utilities

Underground utility work would involve rerouting existing underground utilities and installing new utilities.

Utilities include:

- Domestic water
- Fire protection
- Clarified water
- Service water
- Cooling water

- Fiber optic cable
- Telecom
- Electrical signal trench
- Conduit ductbank
- Sanitary sewer
- Process sewer
- Storm sewer

2.4.2.3 Temporary Construction

Temporary construction work would be required for the construction effort associated with the PDC Project. The following temporary buildings and facility modifications would be required for the construction:

- Construction of office and craft buildings
- Modification of entry facility
- Modification of the PIDAS (a modified security plan would be established to segregate the south side of the main yard from the current PIDAS protected area)
- Installation of temporary fences

2.4.3 Demolition and Removal (D&R) Scope

The discussion of D&R activities in this section is taken from Reference 4.2.

2.4.3.1 D&R Inside K-Area Main Process Building

D&R of selected retired SSCs would be required to allow for the installation of new systems for the PDC Project facility. The following key rooms would undergo D&R:

- Assembly, assembly basement, -20’ crossover, final storage, presentation, and inhibitor room
- Assembly fan room, KAMS, and +48’ elevation

D&R activities are expected to generate some debris that is contaminated with asbestos. Friable asbestos that is not radiologically contaminated would be disposed of at the Three Rivers Regional Landfill. Non-friable and non-contaminated asbestos debris would be transported to the Construction and Demolition (C&D) landfill at SRS for disposal. Asbestos waste that is radiologically contaminated would be taken to E-Area for disposal at SRS.

Any D&R debris that is contaminated with PCBs would be disposed of depending on the PCB concentration, the waste form (solid or liquid), the category (remediation or bulk material), and its hazard status (hazardous or not hazardous). Typically, PCB waste would be disposed of at E-Area or at offsite facilities at Kingston, Tennessee; the Nevada National Security Site; or Energy Solutions in Utah.

The heat exchanges would be disposed of as contaminated large equipment and would go to E-Area. Heavy water disposition is still being evaluated. The two most favorable options would be reuse and disposal.

2.4.3.2 D&R Outside the K-Area Main Process Building

D&R and/or modifications of existing buildings outside would be required to allow for site work and installation of new structures associated with the PDC Project facility.

The following key K-Area facilities would undergo D&R:

- 186-K cooling water basins
- 190-K pump house
- 190-K electrical switchgear room
- 190-K pump suction wells

2.4.3.3 F/H Lab Modifications

A selected portion of F/H Laboratory (Facility 772-F) would be modified to provide expanded sample analysis capabilities to support the PDC Project. This work would also cover the D&R of selected retired SSCs in support of the modification.

Facility process upgrades would include:

- Upgraded rooms in the 772-F Building to a Limited Area.
- Addition of new analytical laboratory modules
- Decontamination and installation of new containment units and analytical equipment
- Upgrades at F/H Lab resulting in a change to Category III
- F/H Lab will become a Limited Area
- Classified computing capability

The F/H Laboratory would become a Limited Area as a result of the modifications. A rollup study performed indicated that the Category II threshold would not be exceeded.

2.4.4 Construction Workforce

PDC site preparation and design work would overlap with non-pit plutonium processing construction; therefore, the construction work forces for each project would also have some years of overlap. The estimated work forces for the combined efforts and the years they would overlap are shown in Table 2.4-2. The construction workforce would work two 10-hr shifts, five days per week (Reference 4.28).

Table 2.4-2: PDC Project Onsite Construction Work Force

Year	Construction Craft Workers		Constr. Mgrs, Field Eng, etc	Design Team	Total
	PDC	Non-Pit	PDC & Non-Pit		
Year 1	79	60	42	100	281
Year 2	195	120	95	150	465
Year 3	198	150	104	200	652
Year 4	120	150	81	200	551
Year 5	105	150	77	250	582
Year 6	228	150	113	250	741
Year 7	250	-	75	200	525
Year 8	250	-	75	200	525
Year 9	250	-	75	200	525
Year 10	200	-	60	150	410
Year 11	150	-	45	100	295
Year 12	50	-	45	100	195

Sources: Reference 4.45, Reference 4.46, Reference 4.47.

Most construction activities would occur in areas with dose rates close to background. A limited amount of D&R of contaminated equipment would occur. Due to the nature of the contamination, the external dose rates on this equipment would be low. Total doses during the construction phase would average less than 0.5 person-rem per year. Radiological exposure would only be an issue during the D&R of the equipment in the assembly basement area and the -20 level heat exchanger bay and -40 level transducer room and tank room. Some of this equipment is contaminated. However, the dose rates would be negligible. No radiological exposure would be expected after the D&R phase was completed. (Reference 4.48)

2.4.5 Construction Releases and Discharges

A list of equipment that would be used during PDC Project construction is shown in Table 2.4-3. Only equipment that would potentially contribute to air pollutant estimates or generate noise is listed. Table 2.4-3 also shows estimated equipment size (i.e., horsepower), use rates, and construction months per year.

Table 2.4-3: PDC Project Construction Equipment

Equipment	MaxHP	Equipment Use Rates			Construction Months per year											
		No. Equip.	Hours/ day	Days/ month	Year 1	Year 2	Year 3	Year 4	Year 5	Year 6	Year 7	Year 8	Year 9	Year 10	Year 11	Year 12
Demolition																
Off-Highway Trucks	250	2	4	15	--	--	--	2	1	--	--	--	4	--	--	--
Forklifts	120	2	6	20	--	--	--	2	1	--	--	--	4	--	--	--
Generator Sets	120	4	6	10	--	--	--	2	1	--	--	--	4	--	--	--
Tractors/Loaders/Backhoes	120	3	6	15	--	--	--	2	1	--	--	--	4	--	--	--
Welders	50	1	2	15	--	--	--	2	1	--	--	--	4	--	--	--
Earthwork																
Graders	175	2	6	20	8	2	--	1	5	--	1	6	3.5	5.5	--	--
Off-Highway Trucks	250	2	2	15	12	10	--	1	5	--	1	6	3.5	5.5	--	--
Rubber Tired Dozers	250	2	4	15	8	2	--	1	5	--	1	6	3.5	5.5	--	--
Scrapers	175	2	6	15	8	2	--	1	5	--	1	6	3.5	5.5	--	--
Tractors/Loaders/Backhoes	120	2	6	20	12	10	--	1	5	--	1	6	3.5	5.5	--	--
Trenchers	120	1	6	15	6	6	--	1	5	--	1	6	3.5	5.5	--	--
Paving																
Pavers	120	1	8	10	4	2	--	--	--	3	--	2	--	--	--	--
Paving Equipment	50	2	8	10	4	2	--	--	--	3	--	2	--	--	--	--
Rollers	120	1	8	10	4	2	--	--	--	3	--	2	--	--	--	--
Construction																
Aerial Lifts	50	2	6	15	6	2	4	10	12	12	12	10	8	6	4	--
Cement and Mortar Mixers	15	1	8	10	8	6	6	8	12	12	12	10	8	6	4	--
Cranes	175	1	6	15	8	4	12	10	12	12	12	10	8	6	4	--
Forklifts	120	3	8	20	4	2	4	10	12	12	12	12	12	12	12	--
Generator Sets	120	4	6	15	12	8	8	10	12	12	12	12	12	12	12	--
Off-Highway Trucks	250	2	4	15	12	8	8	10	12	12	12	12	12	12	12	--
Tractors/Loaders/Backhoes	120	2	6	10	12	6	6	8	12	12	12	10	8	6	4	--
Welders	50	2	6	15	12	4	8	10	12	12	12	12	12	12	12	--
Non-Pit Construction																
500 ton crawler crane	NA	1	2	10	6	6	--	--	--	--	--	--	--	--	--	--
40-75 ton RT crane	120	1	4	15	12	6	--	--	--	--	--	--	--	--	--	--
22 ton RT crane	50	2	6	20	12	12	--	--	--	--	--	--	--	--	--	--

Table 2.4-3: PDC Project Construction Equipment (continued)

Equipment	MaxHP	Equipment Use Rates			Construction Months per year											
		No. Equip.	Hours/ day	Days/ month	Year 1	Year 2	Year 3	Year 4	Year 5	Year 6	Year 7	Year 8	Year 9	Year 10	Year 11	Year 12
Bulldozer	175	1	6	10	6	--	--	--	--	--	--	--	--	--	--	--
Motorgrader	120	1	6	10	6	--	--	--	--	--	--	--	--	--	--	--
Dumptruck - Tandem	250	4	4	10	12	12	--	--	--	--	--	--	--	--	--	--
Vibratory Roller	50	1	4	10	6	4	--	--	--	--	--	--	--	--	--	--
Backhoe	120	2	6	20	12	12	--	--	--	--	--	--	--	--	--	--
Forklift (heavy)	175	2	4	20	12	12	12	12	--	--	--	--	--	--	--	--
Forklift (medium)	120	2	6	20	12	12	12	12	12	--	--	--	--	--	--	--
Excavator	120	2	6	15	10	--	--	--	--	--	--	--	--	--	--	--
Concrete pump truck	250	1	2	10	6	6	--	--	--	--	--	--	--	--	--	--
Concrete pump trailer	50	1	2	10	6	6	6	6	--	--	--	--	--	--	--	--
Light Plants	25	8	8	20	12	12	12	--	--	--	--	--	--	--	--	--
Air Compressor	50	4	8	20	12	12	12	--	--	--	--	--	--	--	--	--
Generator 200KW	175	1	8	20	12	12	12	12	12	--	--	--	--	--	--	--
Generator 150KW	120	1	8	20	12	12	--	--	--	--	--	--	--	--	--	--
Welder (trailer mtd)	50	5	4	15	12	12	12	--	--	--	--	--	--	--	--	--
Material Truck	250	4	2	15	12	12	12	12	12	--	--	--	--	--	--	--
Small soil tamper	15	3	4	15	12	12	12	--	--	--	--	--	--	--	--	--
Loader (skid steer)	50	3	6	20	12	12	12	--	--	--	--	--	--	--	--	--
Truck (tractor)	175	2	2	10	12	--	--	--	--	--	--	--	--	--	--	--
Manlift	25	4	8	20	12	12	--	--	--	--	--	--	--	--	--	--

Source: Reference 4.14.
Note: NA = not available.

2.4.5.1 Construction Emissions

Construction vehicle emissions would be the largest source of atmospheric releases during construction. Fugitive dust emissions would be minimized through best management practices during all ground-disturbing activities. Table 2.4-4 shows estimated K–Area construction emissions from construction activities. The fugitive dust emissions presented in Table 2.4-4 do not account for emission reductions due to best management practices.

2.4.5.1.1 Estimated Emissions of Greenhouse Gases from PDC construction.

The primary greenhouse pollutant is CO_2. However methane CH_4 and nitrous oxide, N_2O, are also considered greenhouse gases and are more damaging to the environment that CO_2. The multiplier used for CH_4 is 21 and the multiplier for N_2O is 310. The resultant total amount of greenhouse gas emitted is calculated by converting the CH_4 and N_2O emissions to equivalent quantities of CO_2, denoted as CO_2e. For construction, the amount of CO_2e emitted is one percent greater (Reference 4.20) than the CO_2 numbers shown in Table 2.4-4.

2.4.5.2 Construction Discharges

The discussion of construction discharges in this section is taken from Reference 4.49.

Stormwater Discharges - In order to meet the South Carolina Department of Health and Environmental Control (SCDHEC) requirements for proposed improvements, the site would be portioned into four drainage areas with four retention basins. The total drainage areas to be disturbed would cover approximately 11.4 acres.

2.4.5.2.1 Outfall K-01

The proposed area that would be disturbed and would drain to Outfall K-01 covers approximately 1.50 acres. The largest proposed structure contributing to this area would be the Administration Building. Several other proposed buildings and structures would contribute to the flow in addition to the existing structures. The total area for Outfall K-01 is approximately 16.50 acres; therefore, a new retention basin would be required. This new basin would be designed to control sediment from construction activities and to reduce the pollutants before final discharge to Indian Grave Branch. Outfall K-01 would have to be repermitted for the Industrial Stormwater General Permit. The existing contributors of zinc would involve the strategic application of soil amendments within the drainage area upstream of the outfall to sequester the zinc pollutant constituents within the soil column. The area requiring this treatment covers approximate five acres.

Table 2.4-4: K-Area Construction Emissions (MT/year)

K-Area Construction Fugitive Emissions from Earthworks Activities (MT/year)

Pollutant	Year 1	Year 2	Year 3	Year 4	Year 5	Year 6	Year 7	Year 8	Year 9	Year 10	Year 11	Year 12
Fugitive PM_{10}	3.09E+00	1.97E-02	0.00E+00	2.06E-02	3.61E-01	3.02E-01	2.06E-02	1.08E+00	2.52E-01	3.89E-01	0.00E+00	0.00E+00
Fugitive $PM_{2.5}$[a]	3.09E+00	1.97E-02	0.00E+00	2.06E-02	3.61E-01	3.02E-01	2.06E-02	1.08E+00	2.52E-01	3.89E-01	0.00E+00	0.00E+00

a. $PM_{2.5}$ emissions conservatively set equal to the PM_{10} emissions.

K-Area Construction Equipment Emissions from Demolition, Earthwork, Paving, and Construction Activities (MT/year)

Pollutant	Year 1	Year 2	Year 3	Year 4	Year 5	Year 6	Year 7	Year 8	Year 9	Year 10	Year 11	Year 12
CO	1.15E+01	8.26E+00	5.42E+00	4.30E+00	5.40E+00	2.91E+00	3.01E+00	4.32E+00	4.03E+00	3.86E+00	2.30E+00	0.00E+00
NOx	1.91E+01	1.36E+01	8.11E+00	7.52E+00	9.67E+00	4.67E+00	4.96E+00	7.49E+00	6.95E+00	6.78E+00	3.83E+00	0.00E+00
VOC	3.20E+00	2.37E+00	1.56E+00	1.09E+00	1.39E+00	7.89E-01	8.01E-01	1.14E+00	1.06E+00	1.01E+00	6.22E-01	0.00E+00
SOx	2.32E-02	1.71E-02	1.06E-02	9.31E-03	1.16E-02	5.66E-03	5.98E-03	8.69E-03	8.26E-03	7.88E-03	4.68E-03	0.00E+00
PM_{10}	1.22E+00	8.59E-01	5.30E-01	4.77E-01	6.09E-01	3.43E-01	3.52E-01	5.00E-01	4.74E-01	4.49E-01	2.76E-01	0.00E+00
$PM_{2.5}$[a]	1.22E+00	8.59E-01	5.30E-01	4.77E-01	6.09E-01	3.43E-01	3.52E-01	5.00E-01	4.74E-01	4.49E-01	2.76E-01	0.00E+00
CO_2	1.99E+03	1.46E+03	8.87E+02	8.08E+02	1.01E+03	4.83E+02	5.12E+02	7.51E+02	7.12E+02	6.82E+02	4.00E+02	0.00E+00
CH_4	2.88E-01	2.14E-01	1.41E-01	9.84E-02	1.25E-01	7.12E-02	7.23E-02	1.03E-01	9.56E-02	9.15E-02	5.61E-02	0.00E+00

a. $PM_{2.5}$ emissions conservatively set equal to the PM_{10} emissions.

K-Area Construction On-Road Commuter Emissions (MT/year)

Pollutant	Year 1	Year 2	Year 3	Year 4	Year 5	Year 6	Year 7	Year 8	Year 9	Year 10	Year 11	Year 12
CO	1.02E+01	1.79E+01	1.98E+01	1.61E+01	1.65E+01	1.85E+01	1.25E+01	1.18E+01	1.12E+01	8.32E+00	5.59E+00	4.01E+00
NOx	1.27E+00	2.14E+00	2.40E+00	2.01E+00	1.98E+00	2.03E+00	1.31E+00	1.29E+00	1.30E+00	1.01E+00	6.76E-01	4.06E-01
VOC	1.07E+00	1.89E+00	2.13E+00	1.76E+00	1.83E+00	2.08E+00	1.42E+00	1.37E+00	1.34E+00	1.01E+00	6.90E-01	5.00E-01
SOx	1.43E-02	2.71E-02	3.23E-02	2.84E-02	3.09E-02	3.73E-02	2.67E-02	2.70E-02	2.74E-02	2.15E-02	1.53E-02	1.15E-02
PM_{10}	6.74E-01	1.28E+00	1.53E+00	1.34E+00	1.46E+00	1.76E+00	1.27E+00	1.28E+00	1.29E+00	1.01E+00	7.17E-01	5.45E-01
$PM_{2.5}$	2.18E-01	4.13E-01	4.95E-01	4.36E-01	4.76E-01	5.71E-01	4.12E-01	4.16E-01	4.22E-01	3.31E-01	2.36E-01	1.78E-01
CO_2	1.47E+03	2.79E+03	3.33E+03	2.92E+03	3.19E+03	3.83E+03	2.75E+03	2.78E+03	2.82E+03	2.23E+03	1.58E+03	1.19E+03
CH_4	9.47E-02	1.68E-01	1.88E-01	1.55E-01	1.60E-01	1.81E-01	1.24E-01	1.18E-01	1.13E-01	8.44E-02	5.71E-02	4.17E-02

Table 2.4-4: K-Area Construction Emissions (MT/year) (continued)

K-Area Total Construction Emissions (MT/year)													
Pollutant	**Year 1**	**Year 2**	**Year 3**	**Year 4**	**Year 5**	**Year 6**	**Year 7**	**Year 8**	**Year 9**	**Year 10**	**Year 11**	**Year 12**	**Max Value**
CO	2.16E+01	2.61E+01	2.52E+01	2.04E+01	2.19E+01	2.14E+01	1.55E+01	1.61E+01	1.53E+01	1.22E+01	7.89E+00	4.01E+00	2.61E+01
NOx	2.04E+01	1.57E+01	1.05E+01	9.53E+00	1.17E+01	6.71E+00	6.27E+00	8.78E+00	8.25E+00	7.78E+00	4.50E+00	4.06E-01	2.04E+01
VOC	4.26E+00	4.26E+00	3.68E+00	2.85E+00	3.22E+00	2.87E+00	2.22E+00	2.51E+00	2.40E+00	2.02E+00	1.31E+00	5.00E-01	4.26E+00
SOx	3.76E-02	4.43E-02	4.29E-02	3.77E-02	4.25E-02	4.30E-02	3.27E-02	3.57E-02	3.57E-02	2.94E-02	2.00E-02	1.15E-02	4.43E-02
PM_{10}	4.98E+00	2.16E+00	2.06E+00	1.84E+00	2.43E+00	2.40E+00	1.64E+00	2.86E+00	2.02E+00	1.85E+00	9.93E-01	5.45E-01	4.98E+00
$PM_{2.5}$	4.53E+00	1.29E+00	1.02E+00	9.34E-01	1.45E+00	1.22E+00	7.84E-01	2.00E+00	1.15E+00	1.17E+00	5.12E-01	1.78E-01	4.53E+00
CO_2	3.46E+03	4.25E+03	4.22E+03	3.73E+03	4.20E+03	4.31E+03	3.27E+03	3.53E+03	3.54E+03	2.91E+03	1.98E+03	1.19E+03	4.31E+03
CH_4	3.83E-01	3.82E-01	3.29E-01	2.53E-01	2.85E-01	2.53E-01	1.96E-01	2.21E-01	2.08E-01	1.76E-01	1.13E-01	4.17E-02	3.83E-01

Source: Reference 4.14

2.4.5.2.2 Outfall K-02

The proposed area that would be disturbed and would drain to Outfall K-02 covers approximately 2.55 acres. The proposed drainage runoff contributing from this area would be an asphalt-paved parking lot. The total area that would contribute to Outfall K-02 is 12.6 acres. A new retention basin proposed for this drainage area would be designed to control sediment from construction activities and to reduce the pollutants before final discharge to Indian Grave Branch. Outfall K-02 would have to be repermitted for the Industrial Stormwater General Permit. The existing contributors of zinc would involve the strategic application of soil amendments within the drainage area upstream of the outfall to sequester the zinc pollutant constituents within the soil column. The area requiring this treatment covers approximately 5 acres. The SCDHEC has directed SRS to apply for an individual Industrial Wastewater Permit for this outfall based upon its analysis of the discharge data. The expected end-state of Outfall K-02 would be its regulation as an individually permitted outfall under the Industrial Wastewater Permit.

2.4.5.2.3 Outfall K-04

The proposed area that would be disturbed and would drain to Outfall K-04 covers approximately 6.12 acres. The largest contributors to this area would be the Glovebox Fabrication Facility, parking lot, and Sand Filter building. The total drainage area contributing to this Outfall K-04 covers approximately 21.8 acres. A new retention basin would be designed to control sediment from construction activities and to reduce the pollutants before final discharge to Pen Branch. The existing contributors of pollutants would involve the strategic application of soil amendments within the drainage area 1,500 ft downstream of the outfall to sequester the pollutant constituents within the soil column. The area requiring this treatment covers approximately 5 acres. This Outfall K-04 would continue regulations under the Industrial Stormwater General Permit.

2.4.5.2.4 Outfall K-New

The proposed drainage area that would be disturbed and would drain to this new retention basin covers approximately 1.24 acres. The proposed facilities contributing from this area include a new substation, new switchgear building, new diesel storage, new utility building, new cooling tower, and new roads. The total area, including existing facilities, is approximately 7.80 acres. A new retention basin would be designed to control sediment from construction activities. This outfall would require a new discharge permit with the SCDHEC.

2.4.5.3 Construction Waste Generation

Annual waste volumes from the construction of the PDC Project would vary based on the type of PDC construction activities. PDC construction waste generation rates are shown in Table 2.4-5

Table 2.4-5: PDC Average Construction Waste Generation Rates

Waste Type	Cubic meters/year
TRU	0
LLW	940
MLLW	17
Hazardous	520
Non-hazardous	440

Source: Based on Reference 4.50.

The estimated volume of hazardous waste generated during construction is based on the The estimated volume of hazardous waste generated during construction is based on the following assumptions:

- The waste would consist of spent cleaning solutions, spilled antifreeze and fuels, non-recyclable chemicals, and cleaning materials.
- The waste would not include excavated soil that is characterized as hazardous.
- No radioactive liquid would be generated during construction.

Hazardous waste would be either absorbed or packaged and treated offsite.

2.4.6 Construction Utility and Material Requirements

PDC construction activities would require the utilities and materials listed in Table 2.4-6.

2.4.7 Operation

The discussion of PDC process systems in this section is taken from Reference 4.48. The PDC Project proposes to combine the capabilities of the existing KAMS with pit processing and non-pit plutonium processing functions in existing structures in K-Area. This section describes the process systems in the PDC Project.

2.4.7.1 Shipping & Receiving System

The Shipping & Receiving System would receive pit and non-pit plutonium metal from across the DOE Nuclear Weapons Complex. The system would receive SST/SGT shipments and provide movement of material to and from unpacking. The Shipping & Receiving System would also receive parts and supplies, including empty containers, and transport these supplies to process and support systems. This system additionally would provide the standard commercially available equipment needed for unconfined material transfer within the PDC facility. Non-standard or specialized material associated with any unique specific systems would be covered within the specific system applicable to the material handling technology. Material received in PDC from onsite sources may arrive in a transport with security equivalent to an SST/SGT, rather than in an SST/SGT.

Table 2.4-6: Utilities and Resources Required

Utilities	Quantities
Potable / Non-Potable Water	4,100,000 liters/year[a]
Electricity – PDC (11 years)	9,400 megawatt-hours/year[b]
Electricity – Glovebox Assembly Building (five years)	6,600 megawatt-hours/year[b]
Fuel Gasoline and Diesel	91,000 gal/year[c]
Resources	**Quantities[d]**
Cement	10,000 tons
Asphalt	200 tons
Steel	6,000 tons
Crushed Stone	2,000 cubic yards
Sand & Gravel	390,000 cubic yards
Chemicals	Form coating 500 gal; oil/lub 1,500 gal; solvents 500 gal
Soil (Fill Material)	13,000[e]

Sources:

a. Reference 4.51. Average use during 11-year construction period in which diesel equipment is used.
b. Reference 4.52. Average use during noted construction period.
c. Reference 4.14. Peak year diesel fuel usage is estimated at 188,000 gallons and total diesel fuel usage equals 1,000,000 gallons.
d. Reference 4.50. Quantities are total.
e. Reference 4.53. Quantity is total.

2.4.7.2 Pit Disassembly System

The PITD System would receive unpacked pits from SIs and 3013 cans containing clean plutonium metal from the Unpacking & Packaging System. Also, 3013 cans of plutonium oxide requiring rework due to off-spec product would be received. The system would bisect and disassemble all pits, then segregate pit components for further processing. The plutonium and plutonium-bonded hemishells would be size-reduced to accommodate batch limitations in the downstream processing. The components/pieces would then be loaded into material transfer containers and sent for further processing in the Plutonium Conversion, Plutonium Separation, Uranium Processing, or SAN systems as appropriate. For 3013 cans that contained clean plutonium metal or failed plutonium oxide, the outer welded can would be opened and the inner can would be removed. The cans of plutonium metal and oxide would be sent to the Plutonium Conversion System for further processing.

2.4.7.3 Plutonium Conversion System

The Plutonium Conversion System would convert plutonium metal from pits into plutonium oxide. The feed materials would include plutonium ingots in crucibles, plutonium pit pieces, and

failed plutonium oxide. The plutonium metal would be oxidized in a DMO furnace, calcined to meet 3013 storage requirements, and then placed in a milk bottle before being sent downstream for blending and final canning of the oxide product.

2.4.7.4 OPH System

The OPH System would lag store, blend, sample, and can the plutonium oxide product received in convenience cans for transfer to the Product Canning System. The resulting plutonium oxide product would be an unclassified, homogeneous, blended product that would not be traceable to its source, meeting specifications for MFFF, classification guidance, and 3013 requirement expectations.

2.4.7.5 Uranium Processing & Staging System

The Uranium Processing & Staging System would convert HEU metal to HEU oxide that would meet Y-12 plant acceptance criteria. HEU hemishells and components would be received from the PITD System where pieces that were contaminated with plutonium would be decontaminated, size-reduced, and processed in a DMO furnace for oxidation to HEU oxide powder. The HEU oxide would be loaded in convenience cans and then into secondary containers for the ES-3100. The system would also sample and package HEU oxide for chemical analysis.

2.4.7.6 Product Canning System

The Product Canning System would package plutonium oxide product, other by-products, and MOX samples. These items would be received in convenience cans from the Plutonium OPH System and placed into 3013 cans for shipment and long-term storage. The system would package the blended product within 3013 inner and outer welded containers.

2.4.7.7 Sanitization (SAN) System

The SAN System would receive classified weapon parts containing only contamination levels of SNM from the pit disassembly and chemical separation operations. Classified characteristics (size, thickness, etc.) of the weapon parts would be destroyed. The sanitized materials would be packaged and discarded as waste.

2.4.7.8 NDA System

The NDA System would provide specialized equipment to certify contents of received containerized SNM feeds, and processed containerized SNM and other pit parts, to meet MC&A requirements. The NDA System would also consist of specialized equipment (i.e., scales, instruments, gages, etc.) located where required within the various gloveboxes for monitoring material flow in and out of the process systems. The NDA System would also provide equipment for waste assay.

2.4.7.9 Vault Storage System

The Vault Storage System would store SNM after receipt in CRTs or 9975s, prior to unpacking; store SNM after partial unpacking, prior to processing; and store SNM and other by-products after partial packaging, prior to shipping.

2.4.7.10 Unpacking and Packaging System

The Unpacking and Packaging System would unpack shipping containers from CRTs, decontaminate shipping containers as required, and stage containerized metal for storage and empty containers for reuse. The system would also perform all of the shipping container packaging needs for the facility, including preparing plutonium oxide and HEU oxide, off spec plutonium oxide, and other pit parts for shipment to other SRS facilities or to other DOE sites.

2.4.7.11 Plutonium Separation System

The Plutonium Separation System would extract plutonium metal from pit pieces containing plutonium attached to another metal. The products would include plutonium ingots, HEU pieces and non- SNM pieces.

This system would use a HYD process to safely separate the plutonium in pits from other pit pieces by use of a hydrogen recycle reaction.

The resulting plutonium ingots would be staged for transfer to the Plutonium Conversion System, where the plutonium metal would be converted to oxide. The HEU pieces contaminated with plutonium would be sent to Uranium Processing for decontamination and oxidation.

The non-SNM pieces would be transferred to the SAN System for destruction of classified aspects (i.e., shape, dimensions etc.).

2.4.7.12 Pit Processing

The process gloveboxes would begin with two PITD gloveboxes located at the west end of the new KAMS +0’ elevation. Each PITD glovebox would have a dedicated SI Unpackage glovebox. The material exiting PITD would enter a common ITS to support a transfer with containment to subsequent processing. Four plutonium DMO gloveboxes would be located on the west end of KAMS 0’ level. A fifth plutonium DMO glovebox line, the non-pit plutonium processing glovebox, would be available and accessible through the ITS. An ISM would be located on KAMS level 0’ adjacent to the four DMO furnaces and connected to the ITS conveyor. This concept is similar to the PDCF ISM, except that the conveyor would be oriented vertically instead of horizontally. To the east of the DMO gloveboxes would be a plutonium OPH glovebox on KAMS 0’ level. The OPH would be directly connected to a Product Inner Canning (PICN) glovebox through an airlock, and the Product Outer Canning (POCN) equipment would be located in the same room as the inner canning glovebox. An overhead conveyance would be available to transfer the 3013 outer from the OPH/PICN/POCN area to the Product NDA suite on KAMS 0’ level. The Product NDA suite would be identical to the PDCF “greenfield” design with one exception: instead of loading assayed 3013 outers on a pallet and storing the pallet in a vault, the 3013s would be loaded into a 9975 primary CV that

was pre-staged through a shielded access port from outside the NDA room. The intent would be to package assayed 3013 containers directly into 9975s for storage of the 9975s in KAMS on the -40' elevation.

HEU metal would be transported from PITD, through the ITS, to a cross conveyor. The cross conveyor would move south, though an existing opening between KAMS 0' level to deliver HEU to one of two HEU gloveboxes. The HEU would support HEU decontamination, staging, size reduction, oxidation, blending, sampling, and canning identical to the latest PDCF design. An area to the north of the HEU lines would be utilized to package HEU outer cans into ES-3100 shipping containers for storage in the vault and subsequent shipping to Y-12.

Non-SNM leaving PITD would travel through the ITS to the SAN glovebox at the east end of KAMS 0' level. Microwave technology would be utilized to melt and sanitize these non-SNM shapes. Sanitized metal would be directly drummed out the SAN gloveboxes and processed from the facility as TRU waste.

Process support equipment (including glovebox exhaust fans and HEPA filters, inert gas purification systems and filtration, process control cabinets, electrical distribution systems, etc.) would be located on the new +31' elevation level in KAMS or the new +16' level in the former "Assembly Area". The potentially contaminated support systems (purification and filtration systems) would be isolated from the process control and electrical distribution systems. Locating these support systems on a different level, above the glovebox/room they support, would improve the operability and maintainability of the process systems by eliminating the congestion present in the PDCF "greenfield" design.

Material storage would be provided in KAMS -40'. This would include an area, separate from the vault storage function, to unpackage MD-2s (shipping packages specifically for pits) from the CPA, unpackage the SI from the MD-2, perform receipt assays, repackage the SI into an ALR8, and stage the ALR8s until delivery to PITD. Additionally, the KAMS -40' elevation would be used to store plutonium oxide for MFFF in 9975s and HEU oxide for Y-12 in ES-3100s. A CRT/CPA staging area would be provided on the KAMS 0' level adjacent to a shipping dock being installed by an ongoing Purification Area Vault Type Room Project. The proposed layout would provide a shipping dock for SNM receipt and shipment and a second loading dock for waste and supplies, similar to the PDCF "greenfield" project.

Throughout the development of this PDC Project concept, every effort was made to maintain the functionality and design features that have been developed to date to support the PDCF "greenfield" project. The proposed process gloveboxes and support equipment would be identical to the existing PDCF "greenfield" designs. Gloveboxes would be the same size and would be shielded identically. The operating equipment contained within the gloveboxes, including manipulators, would be identical to the PDCF concepts/designs. The transfer system, which would transfer materials between gloveboxes within containment, would be identical to PDCF in concept (although it would be laid out differently to support a different glovebox arrangement). The engineered PDC CCS would be maintained for materials delivered to, or removed from, the gloveboxes through the ITS. Zone 1 exhaust would include HEPA filtration and a sand filter located upstream of the stack. The storage and retrieval of shipping containers on KAMS -40' elevation would be performed with AGVs similar to the PDCF concept and the Y-12 HEU Manufacture Facility. The quantities and sizes of the support equipment located on KAMS +31' and main building +16' elevations were developed from PDCF design documents to

ensure that adequate space would be provided for these support systems. While it is recognized that improvements can always be considered as a project progresses through design and construction, the PDC Project proposal takes advantage of the more mature radiological, industrial, and nuclear safety features developed for, and incorporated into, the PDCF designs.

There are some differences between the PDC Project proposed concept and the PDCF project:

- There is only one HYD glovebox in the PDC Project proposal compared to two HYD gloveboxes in the PDCF Project.
- In the PDCF design, metal would be delivered to the DMO process from ITS-1 and oxide would leave the DMO process from the opposite end of the DMO glovebox into ITS-2.

2.4.8 Employment

The PDC Project would have an operational work force of approximately 500 with a peak of 550 (Reference 4.23), of which 60 would work at the F/H Laboratory. This work force would be spread over four shifts and would operate 24 hrs a day, 7 days a week. An estimated 383 of these workers would have the potential for radiological exposure; the estimated total dose to these workers based on 10 years of operations would be 1,920 person-rem (Reference 4.54).

2.4.9 Emissions, Releases, and Resource Requirements

Because PDCF, non-pit plutonium processing, and pit processing operations would be nearly identical, varying principally in feed materials there would be no discernible differences among these alternatives in annual air emissions, liquid and solid waste generation rates, and resource needs. Only the locations for these environmental releases would vary among the alternatives. For this reason, these sources of environmental impacts are only described once in this NEPA Source Document.

2.4.9.1 Air Emissions

Operational Emissions - The PDC operational emissions would be from a new stack at K Area. Flow rates would be 140,000 cfm, 3,000 ft per minute. F/H Lab emissions would be from a stack at F Area. The stack would be 190 ft tall and 7 ft in diameter; flow rates would be 146,000 cfm, 3,800 ft per minute.

Table 2.4-7 shows routine radiological air emissions for PDCF operations at F-Area and PDC operations at K-Area.

Table 2.4-7: Normal Operations Radionuclide Releases

Alternative	Release (PE-Ci/yr)
PDCF at F-Area	3.1E-03
PDC at K-Area	4.0E-03

Source: Reference 4.55.
Note: PE-Ci = Pu-239 (S) dose equivalent curies.

Projected emissions from PDC operations are shown in Table 2.4-8.

Table 2.4-8: Projected Emissions from PDC Operations

Material	Air Emissions (kg/year)
Beryllium	3.22E-06
Cadmium	3.50E-04
Chromium	8.75E-03
Chlorine	1.05E-03
Cobalt	3.50E-04
Fluorine	1.39E-02
Lead	7.00E-04
Manganese	3.50E-04
Nickel	7.00E-04
Phosphorus	3.50E-04

Source: Reference 4.50.

Radionuclide emissions from PDC operations have been estimated and result in a release of 4.0E-03 plutonium equivalent curies per year (PE-Ci/yr) (Reference 4.55). Actual isotopic emissions are classified.

F/H Laboratory Emissions - Table 2.4-9 shows estimated emissions from the F/H Laboratory based on current laboratory emissions, scaled to reflect PDC analyses. Current F/H Laboratory analyses would be similar to future analyses to be conducted for PDC.

2.4.9.2 Liquid Effluents

The discussion of liquid effluents in this section is taken from Reference 4.56.

Potential sources of wastewater from low-activity waste (LAW) related to the PDC Project include limited volume cooling water (LVCW) blowdown, Process Cooling Water (PCW) blowdown, Radiological Control Technician (RCT) Laboratory waste, reverse osmosis reject blowdown, and roof leaks.

Miscellaneous safety shower/eyewash use would generate personnel decontamination water. The wastewater collected from the safety showers/eyewashes would also be considered mop water. Water generated from safety/eyewash use would be non-routine wastewater.

Normal testing of these showers/eyewashes would be required. Wastewater generated from the testing of the safety showers/eyewashes would be collected in bottles and would normally be placed into the process drain upon successful testing as clean.

Table 2.4-9: Estimated Emissions from the F/H Laboratory

Area	Emission Point	Building	Pollutant Name	Abated (tpy)	Abated (MT/year)
Criteria Pollutants					
F	QP0018	772000	Total PM	1.89E-02	1.71E-02
F	QP0018	772000	VOC (Ozone Precursors)	2.13E+00	1.93E+00
Area	**Emission Point**	**Building**	**Pollutant Name**	**Abated (tpy)**	**Abated (kg/year)**
Hazardous Air Pollutants					
F	QP0018	772000	Hydrogen Fluoride	6.38E-04	5.78E-01
F	QP0018	772000	Hydrochloric Acid (Hydrogen Chloride)	3.14E-06	2.85E-03
F	QP0018	772000	Methyl Alcohol (Methanol)	4.22E-01	3.83E+02
F	QP0018	772000	Nitric Acid	3.03E-01	2.75E+02
F	QP0018	772000	Potassium Permanganate	5.67E-24	5.15E-21
F	QP0018	772000	Potassium Thiocyanate	4.84E-04	4.39E-01
F	QP0018	772000	Toluene	1.18E-02	1.07E+01
F	QP0018	772000	Xylene (P-)	3.66E-03	3.32E+00
Area	**Emission Point**	**Building**	**Pollutant Name**	**Abated (tpy)**	**Abated (kg/year)**
Air Toxic Pollutants					
F	QP0018	772000	Ammonium Chloride	2.88E-25	2.62E-22
F	QP0018	772000	Phosphoric Acid	2.03E-02	1.84E+01
F	QP0018	772000	Sodium Hydroxide (Caustic Soda)	1.83E-24	1.66E-21
F	QP0018	772000	Sulfuric Acid	6.16E-04	5.59E-01
Area	**Emission Point**	**Building**	**Pollutant Name**	**Abated (tpy)**	**Abated (Ci/year)**
Radionuclides					
F	QP0018	772000	Cs-137	--	1.63E-07
F	QP0018	772000	Sr-90	--	2.26E-07
F	QP0018	772000	U-234	--	4.29E-08
F	QP0018	772000	U-235	--	2.18E-08
F	QP0018	772000	U-238	--	4.28E-08
F	QP0018	772000	Pu-238	--	2.07E-08
F	QP0018	772000	Pu-239	--	4.73E-08
F	QP0018	772000	Am-241	--	1.48E-08
F	QP0018	772000	Cm-244	--	8.89E-10
F	QP0018	772000	Gross Beta	--	2.88E-06
F	QP0018	772000	Gross Alpha	--	5.60E-08

Source: Reference 4.35.

LVCW Blowdown - The LVCW System would be composed of eight separate packaged closed-loop LVCW units and associated piping. The closed-loop design would serve as a contamination barrier, preventing the release of radioactive contaminants from the glovebox to PCW via the LVCW units. The gloveboxes requiring LVCW are as follows:

- Plutonium Conversion (DMO-l, 2, 3, 4)
- Hydrogen Process (HYD-l & 2)
- Main Uranium Oxidation (HEUM - 1,2,3)
- DMO Glovebox associated with the non-pit plutonium processing.

The LVCW system would occasionally be blown down. When utility wastewater from LVCW blowdown was generated, the utility wastewater would be collected (a maximum of 6 liters), an absorbent would be added, and the waste would be disposed of as solid LLW.

PCW Blowdown - The PCW Loop would provide cooling to support glovebox processes within the PDC Project process area, either directly or via the LVCW System. The PCW Loop would provide a barrier to prevent radioactive contamination migration from the supported processes into the Process Chilled Water Loop. The PCW system would provide cooling to the LVCW system heat exchangers (eight heat exchangers) in LVCW units, PITD #1 and #2, argon purification, SAN heat exchangers, plutonium and HEU conversion argon purification, and SAN magnetrons.

The PCW would occasionally be blown down as utility wastewater. Prior to blowdown, the PCW would be sampled inline. After sampling, the PCW would be blown down into a portable Tuff tank. The utility wastewater in the Tuff tank would then be transferred to a tanker and dispositioned to the Effluent Treatment Project[2] (ETP).

RCT Laboratory Waste - The RCT Laboratory would generate utility wastewater from excess samples, instrument flush water, and safety shower/eyewash use. Wastewater generated from excess samples and instrument flush water would be non-routine wastewater. It would be mixed with absorbent and disposed of as solid waste. Wastewater generated from safety shower use/testing would also be non-routine wastewater. If generated, an absorbent would be added to the mop water and disposed of as solid waste. Wastewater generated from the testing of the safety showers would be collected in bottles and would normally be placed into the process drain upon successful testing as clean.

Roof Leaks - Wastewater generated from roof leaks would be non-routine wastewater. If a significant amount were generated, the wastewater would be mopped up, collected into the portable Tuff tank, transferred to a tanker, and transported to the ETP. If small amounts of wastewater were generated, an absorbent would be added and the waste would be disposed of as solid waste.

Liquid waste streams from PDC Project and F/H Laboratory operations would have multiple pathways for disposal (Table 2.4-10). Operations of the F/H Laboratory would generate 11,325 gal of liquid high-activity waste (HAW). PDC operations would not generate any HAW.

[2] The ETP is a chemical/physical wastewater treatment facility that had formerly been named the Effluent Treatment Facility. This document uses ETP throughout and notes that historical documents may use the facility designation.

Table 2.4-10: PDC Project Liquid Waste Disposal Pathways

Waste Type	Release Point or Destination	Waste Volume (gal/year)	Shipping Mode
High-activity drain from F/H Lab	WSB	11,325	Truck
Sanitary waste, condensate, blowdown	Central Sanitary Waste Water Treatment Facility	8,239,000	Piped
LAW from PDC and F/H Lab	ETP	7,500	Truck

Source: Reference 4.17 (volumes from PDCF modified based on known design differences).

2.4.9.3 Solid Waste Generation

PDC operations would generate the following waste volumes (Reference 4.48):

- Solid TRU = 84.7 cubic meters per year (m^3/year) (unpackaged); would be taken to E-Area for final certification and transported to WIPP for disposal
- Solid MTRU = 56 m^3/year (unpackaged); would be taken to E-Area for final certification and transported to WIPP for disposal
- Solid LLW = 877 m^3/year; would be taken to E-Area for disposal
- Solid nonhazardous =1,783 m^3/year; would be taken to E-Area for staging prior to transport to offsite disposal facility

Table 2.4-11 lists TRU waste generation rate for PDC. These shipment numbers for job control waste are also representative of TRU waste shipments that would occur for PDCF. The PDC Project would also have similar capabilities to prepare the 6 MT for direct shipment to WIPP as previously described for non-pit plutonium processing.

Table 2.4-11: PDC TRU Waste Disposition Pathway

Case	Annual Volume (m^3)	Annual Shipments
Operate PDC at 3.5 MT Pu per year	180	21

Source: Reference 4.57.
Note: m^3 = cubic meter.

2.4.9.4 Utility Requirements

Utility requirements cited in the SPD EIS Table E-7 (Reference 4.7) are still applicable except for the requirements shown in Table 2.4-12.

Table 2.4-12: Utility Requirements

Utility	Annual Requirement
Water	61,000,000 liters[a]
Electricity	41,000 megawatt-hours[b]
Coal	Zero[a]
Diesel Fuel for Emergency Diesels	172,800 gal/year based on 500 hours of operation[c]

Sources:
a. Reference 4.50.
b. Reference 4.52.
c. Reference 4.22

2.4.9.5 Resource Requirements

Gases - Resource requirements that were used in the SPD EIS Table E-7 (Reference 4.7) are still applicable except for the requirements shown in Table 2.4-13.

Table 2.4-13: Resource Requirements

Gas	Annual Volume
Nitrogen[a]	24,000 m^3
Argon[b]	95,000 m^3
Helium[b]	11,000 m^3

Sources:
a. Reference 4.25.
b. Reference 4.26.

Gases that would be used in the Analytical Laboratory, the Process Gas Supply System, the Argon and Helium Supply System, and the Nitrogen Supply System are listed in Table 2.4-14.

Chemicals - A chemical screening analysis was conducted for the hazardous chemicals that would be used at the PDCF; the PDCF analysis results would be similar for the PDC Project. These chemicals would be present primarily in five PDC process areas:

- Process Gas Supply System
- HVAC Chilled Water System
- Argon and Helium Supply System
- Analytical Laboratory
- Nitrogen Supply System

Table 2.4-15 lists the chemicals and chemical mixtures that would be used in the PDCF Project Analytical Laboratory (first column) and their source (second column). A similar list of chemicals would be expected for the PDC Project. As can be seen from the second column, many of the mixtures would be prepared in the laboratory from pure chemicals. Others would be procured as pure chemicals and used either at full strength or diluted, typically with water.

Table 2.4-14: Gases Used in Processes

Gas	System	Quantity Present (volume)	Quantity Present (mass) (kg)
Argon	Argon and Helium Supply	900 gal of refrigerated liquid	4750
Nitrogen	Nitrogen Supply	1,500 gal as refrigerated liquid	5150
Nitrogen	Nitrogen Supply	One 70-liter and two 25-liter dewars	108.8
Oxygen	Analytical Laboratory	Gas cylinder, 291 SCF	10.927
P-10 (90%Ar/ 10% Methane)	Analytical Laboratory	Gas cylinder, 291 SCF	12.36
6% Hydrogen/ 94% Argon	Process Gas Supply	Gas cylinder, 291 SCF	12.88
6% Hydrogen/ 94% Helium	Process Gas Supply	Gas cylinder, 291 SCF	1.326
1% Hydrogen/ 99% Argon	Process Gas Supply	Gas cylinder, 291 SCF	13.53
Hydrogen	Process Gas Supply	Gas cylinder, 291 SCF	0.688
Helium	Process Gas Supply	Two skids of 16 gas cylinders, (291 SCF each cylinder)	21.87
1% Oxygen/ 99% Argon	Process Gas Supply	Gas cylinder, 291 SCF	13.63
25% Helium/ 75% Oxygen	Process Gas Supply	Gas cylinder, 291 SCF	8.537
Propane	Analytical Laboratory	Pressurized liquid – 20 lbs	9.072

Source: Reference 4.48.
Note: SCF = standard cubic foot.

Table 2.4-15: Hazardous Chemical Inventories in PDCF

Chemical	Preparation/Procurement
Acetone	Procured in 4-liter bottles, four at a time
Anhydrone (Magnesium perchlorate)	Procured as magnesium perchlorate(s)
Argon	Procured as liquid – stored in 900-gal insulated tank
Ascorbic Acid	Procured as ascorbic acid(s)
Barium Chloride (0.5 M)	Prepared from barium chloride(s) and water
12 M HNO_3 – 0.1 M HF	Prepared from 68 wt % HNO_3, 49 wt. % HF and water
0.5 mg/ml Collodion in Alcohol	Prepared from collodion (nitrocellulose, ethyl ether – 60 to 70%, ethyl alcohol) and ethyl alcohol
Depleted U_3O_8	Procured as depleted U_3O_8
Diphenylcarbazide Solution	Procured as diphenylcarbazide(s) dissolved in acetone to make solution, assume hazard bounded by acetone
Eluant Solution ($NaHCO_3$, Na_2CO_3 and water)	Prepared from $NaHCO_3$(s) and Na_2CO_3(s) and water
F/Cl Standard	Prepared from 36 wt. % HCl and 49 wt. % HF and water
Ferrous Sulfamate 2 M	Prepared from ferrous sulfamate(s) and water
Ferrous Sulfate 1.5 M	Prepared from ferrous sulfate(s) and water
0.1 M HCl – 0.05 M HF	Prepared from 36 wt % HCl, 49 wt. % HF and water
HCl 5 M and Oxalic Acid 0.05 M	Prepared from 36 wt % HCl, oxalic acid(s) and water
HCl 6 M and Oxalic Acid 0.05 M	Prepared from 36 wt % HCl, oxalic acid(s) and water
Helium	Procured in portable gas cylinder (291 SCF)[a]
12 M HNO3 and 0.1 M HF	Prepared from 68 wt % HNO3, 49 wt. % HF and water
Hydrochloric Acid 0.04 M	Prepared from 36 wt % HCl, and water
Hydrochloric Acid 9 M	Prepared from 36 wt % HCl, and water
Hydrogen 4% and Helium	Procured in portable gas cylinder (291 SCF)
Hydrogen Peroxide 3%	Prepared from 30% hydrogen peroxide solution
Hydrogen Peroxide 30%	Procured as 30% hydrogen peroxide solution

Table 2.4-15: Hazardous Chemical Inventories in PDCF (continued)

Chemical	Preparation/Procurement
0.02 M HNO_3 – 0.02 M HF, 0.02 M NH4I	Prepared from 68 wt % HNO_3, 49 wt. % HF and NH4I(s) and water
0.02 M HNO_3 – 0.005 M HF	Prepared from 68 wt % HNO_3, 49 wt. % HF and water
Liquid Scintillation Cocktail (Ultima Gold LT)	Procured as Ultima Gold LT
Methanol 95%, Ethanol 5%	Prepared by mixing methanol and ethanol
Nitric Acid (various molar concentrations)	Prepared from 68 wt % nitric acid
3 M HNO_3 – 0.2 M HF and other molar ratios	Prepared from 68 wt % HNO_3, 49 wt. % HF and water
2.5 to 0.5 M $Al(NO_3)_3$	Prepared by dissolving solid $Al(NO_3)_3$ in water
3 M HNO_3 – 0.1 M $Fe(SO_3NH_2)_2$ (Ferrous Sulfamate)– 0.1 M $C_6H_8O_6$ (Ascorbic Acid)	Prepared from 68 wt % HNO_3, solid ferrous sulfamate, solid ascorbic acid and water
3 M HNO_3 – 0.01 M $Fe(SO_3NH_2)_2$ (Ferrous Sulfamate)	Prepared from 68 wt % HNO_3, solid ferrous sulfamate, and water
Nitrogen	Procured as liquid, stored in 1,500-gal insulated tank
Oxygen	Procured in portable gas cylinder (291 SCF)
Potassium Dichromate solutions	Prepared from potassium dichromate(s) and water
Potassium Oxalate 1 M	Prepared from potassium oxalate(s) and water
Propane	Procured as pressurized liquid, 50 lbs per tank
Sodium Hydroxide	Procured as wt. 25 % solution in water
Sodium Nitrate 3 M	Prepared from sodium nitrate(s) and water
Potassium Chloride 4 M	Prepared from potassium chloride(s) and water
Sulfate standard	Prepared from sodium sulfate and water
Sulfuric acid solutions (various molarities)	Prepared from 95 wt. % sulfuric acid and water
Tetrasodium Pyrophosphate Decahydrate ($Na_4P_2O_7 \cdot 10H_2O$)	Prepared by dissolving $Na_4P_2O_7 \cdot 10H_2O$(s) in water

Source: Reference 4.48.
Note: mg/ml= milligrams per milliliter.
a. Standard cubic feet of gas measured at 70°F and atmospheric pressure.

From a hazard screening standpoint, a screening based on the chemicals listed in column 2 would provide a bounding chemical screening assessment. The composite list and the assumed quantities that could be spilled in an accident are shown in Table 2.4-16.

Table 2.4-16: Chemicals Delivered for Use in the PDCF

Chemical	Formula	CAS Registry No.	Amount Per Delivery
Acetone	C_3H_6O	67-64-1	16 L
Aluminum Nitrate	$Al(NO_3)_3$	13473-90-0	1 kg
Ascorbic acid	$C_6H_8O_6$	50-81-7	1 kg
Barium chloride	$BaCl_2$	10361-37-2	1 kg
Collodion (Pyroxylin) Solution	$C_{12}H_{16}O_6(NO_3)_4$	9004-70-0	1 liter
Diphenyl Carbazide	$C_{13}H_{14}N_4O$	140-22-7	1 kg
Ethanol	C_2H_6O	64-17-5	16 L
Ferrous Sulfamate	$Fe(SO_3NH_2)_2$	14017-39-1	5 kg
Ferrous Sulfate	$FeSO_4$	7720-78-7	1 kg
Hydrochloric Acid (36 weight percent)	HCl	7647-01-0	16 L
Hydrofluoric Acid (49 weight percent)	HF	7664-39-3	16 L
Hydrogen Peroxide (30 weight percent)	H_2O_2	7722-84-1	16 L
Isopropanol	$(CH_3)_2CHOH$	67-63-0	16 L
Magnesium Perchlorate	$MgCl_2O_8$	10034-81-3	1 kg
Methanol	CH_3OH	67-56-1	16 L
Nitric Acid (68 weight percent)	HNO_3	7697-37-2	16 L
Oxalic Acid	$HO(CO)_2OH$	122-62-7	1 kg
Potassium Chloride	KCl	7447-40-7	16 L
Potassium Dichromate	$K_2Cr_2O_7$	231-906-6	1 kg
Potassium Oxalate	$K_2(CO)_2$	583-52-8	1 kg
Scintillation cocktail		9016-45-9	1 kg
Sodium Carbonate	Na_2CO_3	497-19-8	1 kg
Sodium Hydroxide	NaOH	1310-73-2	55 gal
Sodium Hypochlorite (30 weight percent)	NaOCl	7681-59-9	55 gal
Sodium Nitrite	Na_2SO_3	7632-00-0	1 kg
Sodium Pyrophosphate	$Na_4P_2O_7$	7722-88-5	1 kg
Sodium Sulfate (0.4 M)	Na_2SO_4	7757-82-6	55 gal
Sulfuric Acid (95 weight percent)	H_2SO_4	7664-93-9	55 gal
Tolyltriazole (solid)	$C_7H_7N_3$	29385-43-1	50 lbs

Source: Reference 4.48.
Note: CAS = Chemical Abstracts Service; L = liter.

3.0 ENVIRONMENTAL IMPACTS

This chapter provides impact modeling results and analyses for facility accidents and routine radiological emissions. Potential facility accidents were developed and exposures to offsite individuals were calculated. Each process was evaluated, and the radiological impacts to the public are presented.

3.1 Nonradiological Impacts from Routine Construction and Operations

Onsite emissions from construction activities were estimated for the PDC, non-pit, and PDCF alternatives for each year of their construction schedules. Therefore, four modeling scenarios were evaluated to determine the maximum modeled pollutant concentrations for each alternative (References 4.18 and 4.58). For each scenario, short-term and annual emission rates were calculated for the dispersion modeling analysis in units of grams per second. The annual emission rates were the total annual emissions averaged over 8,760 hrs per year. The short-term emission rates were calculated as a conservative estimate assuming the total annual construction emissions occurred over 8 months of the year and 22.5 days per month.

Emissions of criteria pollutants also were estimated for operational emissions for the PDC, non-pit, and PDCF alternatives, including process stacks, laboratory stack, and diesel-fired emergency generators. For each emission source, short-term emission rates were calculated from maximum hourly emission estimates, and annual emission rates were calculated from hourly emissions averaged over 8,760 hrs per year.

The AERMOD air quality model, with the PRIME building downwash algorithm (Version 09292), was used to calculate the ambient air quality concentrations resulting from construction and operational emissions. The PRIME downwash algorithm in the AERMOD model accounts for building wake effects on dispersion. AERMOD is the current model preferred by EPA for use in nearfield regulatory applications. No wet or dry depletion/deposition was included in the modeling. The model was set to RURAL dispersion because the terrain/land use within 3 kilometers (km) of the site is predominantly rural. AERMOD was used with all regulatory options, and included: stack-tip downwash, elevated terrain effects, calms processing, missing data processing, “upper bound” values for supersquat buildings, and no exponential decay.

AERMOD utilizes two meteorological data files: (1) a file of surface boundary layer parameters, and (2) a file of profile variables including wind speed, wind direction, and turbulence parameters. These two meteorological input files are generated by the AERMOD meteorological preprocessor program (AERMET). AERMET was used to process three sets (i.e., airport, upper air, and onsite) of meteorological data into the surface and profile meteorological input files required by AERMOD. Input for AERMET consisted of hourly observations from Bush Field at Augusta, Georgia; twice-daily upper air soundings from the radiosonde station at Atlanta, Georgia; and quality-assured, 15-minute values of wind and temperature from the four levels (4, 18, 36, and 61 meters [m]) of the SRS Central Climatology tower. Data files were processed for each of the five years 2002-2006 of meteorological data.

For the PDC and non-pit scenarios, which includes construction of support facilities around the existing K-Area structures, specific construction areas were represented as area sources. Plume heights of 20 ft were used to represent an average plume height from construction equipment and fugitive dust emissions. Because the PDCF alternative would be a new

construction project where the entire footprint of the project would be under construction, the PDCF emissions were represented as a single volume source.

Construction emissions were divided into three categories: onsite construction exhaust, fugitive dust from construction equipment, and onsite vehicle emissions. Because commuter vehicle emissions are assumed to occur over a 25-mile trip length and the impact from these sources would be dispersed over the entire 25-mile trip length, the commuter vehicle emissions were not evaluated in this analysis. Receptor locations were established at appropriate distances to ensure sufficient density and areal extent to adequately characterize the pattern of impacts around the boundary of the SRS. The receptor locations were obtained from a boundary data file used for the SPD EIS (Reference 4.7).

The highest 1st-high concentrations for each averaging period from the AERMOD output were reported for each pollutant. Tables 3.1-1 and 3.1-2 present the highest 1st-high concentration calculated at a specific receptor for construction emissions and operating emissions, respectively. Use of the highest 1st-high concentrations is appropriate for comparison with the significant impact thresholds. Concentrations above the significant impact level would need to undergo further analysis to ensure that cumulative impacts from all sources with potential impacts within the significant impact area would not exceed the ambient air quality standards. However, use of the highest 1st-high concentration is not always appropriate for use with the ambient air quality standards. Ambient air quality standards use a variety of methods for evaluating the number of exceedances allowed before the standard is considered not to be met. For example, the basis for compliance with the 1-hr nitrogen dioxide standard, which is the only pollutant-averaging period shown in this analysis to be considerably higher than the significant impact threshold, is a 3-year average of the 98th percentile of the daily maximum 1-hr average. EPA guidance (Reference 4.59) on demonstrating compliance with the 1-hr nitrogen dioxide National Ambient Air Quality Standard (NAAQS) is to use the 8th-highest of the daily maximum 1-hr values (not the highest 1-hr value) as an unbiased surrogate for the 98th percentile.

The results of the analysis for the PDC, non-pit, and PDCF alternatives indicate that the maximum 1st-high construction concentrations would be below the ambient air quality standards for each of the criteria pollutants and averaging periods. Only the 1-hr nitrogen dioxide ambient concentrations were well above the significant impact level. Significant impact levels are concentration thresholds below which no further analysis is necessary for that pollutant, as it is considered to be insignificant. As previously discussed, the 8th-highest maximum 1-hr concentration should be used for comparison with the nitrogen dioxide ambient air quality standard. The 8th-highest maximum 1-hr nitrogen dioxide concentrations calculated for the construction of the PDC, non-pit, and PDCF alternatives are 44 micrograms per cubic meter (µg/m^3), 30 µg/m^3, and 110 µg/m^3 respectively, which are all less than the ambient air quality standard. The 1-hr concentrations are significantly overestimated due to the level of detail available for the construction schedule. The 1-hr concentrations are based on the assumption that all emissions occurring within the same construction year are emitting at the maximum short-term emission rate during the same hour, which is not feasible based on the construction schedule.

Table 3.1-1: Construction Emissions Maximum Ground-level Concentrations

Pollutant	Averaging Period	Maximum Concentration (µg/m^3)			Significant Impact Threshold (µg/m^3)	Air Quality Standard (µg/m^3)
		PDC	Non-Pit	PDCF		
CO	8-hr	72.6	22.0	118	500	10,000
	1-hr	104	31.4	169	2,000	40,000
NO_2	Annual	0.1	0.02	0.19	1	100
	1-hr	170	55.1	286	10	188
SO_2	Annual	0.001	0.0001	0.0002	1	78.6
	24-hr	0.01	0.004	0.02	5	367
	3-hr	N/R	N/R	N/R	25	1,300
	1-hr	0.2	0.1	0.3	10	196.5
PM_{10}	Annual	N/R	N/R	N/R	1	50
	24-hr	1.8	1.0	13.5	5	150
$PM_{2.5}$	Annual	0.01	0.01	0.17	1	15
	24-hr	1.8	1.0	13.5	5	35

Source: Reference 4.58 (PDC, non-pit, and PDCF).
Notes: N/R = not reported
µg/m^3 = micrograms per cubic meter.

Table 3.1-2: Operating Emissions Maximum Ground-level Concentrations

Pollutant	Averaging Period	Maximum Concentration (µg/m^3)			Significant Impact Threshold (µg/m^3)	Air Quality Standard (µg/m^3)
		PDC	Non-Pit	PDCF		
CO	8-hr	12.6	2.2	13.8	500	10,000
	1-hr	44.7	10.2	67.2	2,000	40,000
NO_2	Annual	0.042	0.012	0.041	1	100
	1-hr	171	47.3	253	10	188
SO_2	Annual	0.001	0.001	0.0001	1	78.6
	24-hr	0.23	0.23	0.009	5	367
	3-hr	N/R	N/R	N/R	25	1,300
	1-hr	3.6	3.1	0.12	10	196.5
PM_{10}	Annual	N/R	N/R	N/R	1	50
	24-hr	0.61	0.24	0.49	5	150
$PM_{2.5}$	Annual	0.001	0.001	0.001	1	15
	24-hr	0.47	0.24	0.33	5	35

Source: Reference 4.58 (PDC, non-pit, and PDCF).
Notes: N/R = not reported
µg/m^3 = micrograms per cubic meter.

Similarly, the impact analysis results for operating emissions presented in Table 3.1-2 indicate that the applicable standards for criteria pollutants would not be exceeded using the highest 1st-high calculated concentrations, except for the 1-hr nitrogen dioxide standard which is shown to be exceeded due to PDCF operations. Using the 8th-highest maximum 1-hr nitrogen dioxide concentrations calculated for the operation of the PDC, non-pit, and PDCF alternatives are 73 µg/m^3, 17 µg/m^3, and 116 µg/m^3, respectively, which are all less than the ambient air quality standard (Reference 4.58).

3.2 Radiological Impacts from Facility Accidents

This section describes the methodology used to determine the amount of radioactive material that would be released to the atmosphere from facility accidents. Additional details are provided in Reference 4.60. The methodology is based on the guidance contained in Reference 4.61 and Reference 4.62, and on the techniques described in DOE-HDBK-3010-94 (Reference 4.63) for airborne releases. The DOE handbook:

- Summarizes experimental data related to airborne radionuclide releases and source term (ST) development
- Describes the DOE ST methodology (this methodology is briefly summarized below)
- Provides recommended methods for estimating the parameters employed to calculate STs: material at risk (MAR), damage ratio (DR), airborne release fraction (ARF), respirable fraction (RF), and leak path factor (LPF).

The ST released to the environment under accident conditions is determined from the multiplication of the following parameters:

$$ST = MAR \times DR \times ARF \times RF \times LPF$$

Where:

ST = Source Term. The amount of radioactive material or other hazardous material released to the air.

MAR = Material at Risk. The amount of radioactive or other hazardous material available (curies [Ci] or mass) acted upon by a given physical stress.

DR = Damage Ratio. The fraction of the MAR impacted by the accident-generated conditions.

ARF = Airborne Release Fraction. The coefficient used to estimate the amount of a radioactive or hazardous material that can be suspended in air and available for transport under a specific set of accident conditions. Bounding values have been selected based on the nature of the accident and the form of the material.

RF = Respirable Fraction. The fraction of airborne particles that can be transported through air and inhaled into the human respiratory system. These particles are commonly assumed to be 10 micrometers (µm) Aerodynamic Equivalent Diameter (AED) and smaller. (AED is the diameter of a sphere of density 1 gram per cubic centimeter that exhibits the same terminal velocity as the particle in question.). Bounding values have been selected based on the nature of the accident and the form of the material.

LPF = Leak Path Factor. The fraction of radionuclides or hazardous material in air transported through some confinement, deposition, or filtration mechanism.

The MAR and ST released to the environment were presented using units of Pu-239 (Y) dose equivalent kilograms and grams, respectively.

In this analysis, DRs were used to denote several things: (1) a DR of 1.0 was used to denote that the entire MAR was available for release, (2) a DR of 0.25 was used to take credit for safety significant fire suppression, (3) a DR of 0.1 was used for safety class fire suppression, and (4) other fractional DRs were used to denote the number of containers that would fail in an accident. For example, a DR of 0.0294 was used to denote 1 container out of 34 failed, a DR of 0.0667 was used to denote 2 containers out of 30 failed, a DR of 0.11 was used to denote 1 container out of 9 failed, and a DR of 0.2 was used to denote 1 container out of 5 failed.

The ARFs and RFs used in the analysis were taken from Reference 4.64 and Reference 4.8. Table 3.2-1 lists the container types, and their associated release mechanisms, ARFs, and RFs.

Three mitigative barriers were present at the PDC or PDCF facilities: sand filters, HEPA filters, and the milk bottle filter. For sand filters, the LPF was 0.0049; for HEPA filters, the LPF was 0.003; and for the milk bottle filter, the LPF was 0.005.

For accidents that could occur at K-Area, the descriptions of the accidents were based on the *Conceptual Safety Design Report (CSDR) for Pit Disassembly and Conversion (PDC) Project* (Reference 4.64). For accidents that could occur at F-Area, the descriptions of the accidents were based on the *Pit Disassembly and Conversion Facility Preliminary Documented Safety Analysis (PDSA)* (Reference 4.8, Chapter 3.0).

Two plutonium isotopic compositions were evaluated in this analysis: a weapons-grade (WG) plutonium isotopic composition and the KIS plutonium isotopic composition. Additionally, HEU, Pu-238, and tritium were evaluated. The nominal isotopic compositions, specific activities, and activities per gram of material are contained in Tables 3.2-2 through 3.2-5. Table 3.2-6 lists the Pu-239 (Y) dose equivalent gram or kilogram conversion factors for the two plutonium isotopic compositions, HEU, Pu-238, and tritium.

Table 3.2-1: Container Types, Release Mechanisms, ARFs, and RFs

Container Type	Release Mechanism	ARF	RF
3013 Can, Outer Can, HEU Can	High Pressure	0.108	0.7
3013 Can, Inner Can, Milk Bottle, Convenience Can	Impact/Crush	0.005	0.4
Inner Can, non-pit can, Milk Bottle	Moderate Pressure	0.1	0.7
Equipment, Convenience Can	Low Pressure	0.005	0.4
Waste Can, Convenience Vacuum	Thermal	0.0005	1.0
Equipment	Thermal (Molten)	0.01	1.0
Equipment	Thermal	0.005	0.4
Transfer Containers	Thermal (Ignition)	0.0005	0.5
Transfer Containers (Uranium)	Thermal (Ignition)	0.001	1.0
Various	Thermal (Liquid)	0.002	1.0
Various	Impact/Crush (Metal)	5E-7	1.0
HAW Tanks	Liquid	0.0002	0.5
Type B Container (Tornado Missile)	Impact	0.0005	0.4
Type B Container (Design Basis)	Thermal/Impact	0	0
Type B Containers (Beyond Design Basis)[a]	Thermal/Impact	0.0002	1.0
Waste	Thermal	0.0005	1.0
Furnace	High Temperature Interaction	1	0.5
Gases	Thermal	1	1

Source:
a. Reference 4.65, Table 6.26, Page 106.
Note: ARF = airborne release fraction
RF = respirable fraction

Table 3.2-2: Nominal WG Plutonium Isotopic Composition

Radionuclide	Weight Fraction	Specific Activity (Ci/g)	Activity per Gram (Ci/g)
Pu-238	0.00050	1.71E+01	8.55E-03
Pu-239	0.92350	6.21E-02	5.73E-02
Pu-240	0.06500	2.27E-01	1.48E-02
Pu-241	0.00000	1.03E+02	0.00E+00
Pu-242	0.00100	3.93E-03	3.93E-06
Am-241	0.01000	3.44E+00	3.44E-02

Source: Reference 4.66.

Table 3.2-3: Nominal KIS Plutonium Isotopic Composition

Radionuclide	Weight Fraction	Specific Activity (Ci/g)	Activity per Gram (Ci/g)
Pu-238	0.00040	1.71E+01	6.84E-03
Pu-239	0.87800	6.21E-02	5.45E-02
Pu-240	0.11540	2.27E-01	2.62E-02
Pu-241	0.00370	1.03E+02	3.81E-01
Pu-242	0.00260	3.93E-03	1.02E-05
Am-241	0.06250	3.44E+00	2.15E-01

Source: Reference 4.66.

Table 3.2-4: Nominal HEU Isotopic Composition

Radionuclide	Weight Fraction	Specific Activity (Ci/g)	Activity per Gram (Ci/g)
U-234	0.01000	6.24E-03	6.24E-05
U-235	0.93100	2.16E-06	2.01E-06
U-236	0.00500	6.47E-05	3.24E-07
U-238	0.05400	3.36E-07	1.81E-08

Source: Reference 4.66.

Table 3.2-5: Additional Radionuclides Analyzed

Radionuclide	Weight Fraction	Specific Activity (Ci/g)	Activity per Gram (Ci/g)
H-3	1.0	9.69E+03	9.69E+03
Pu-238	1.0	1.71E+01	1.71E+01

Source: Reference 4.66.

Table 3.2-6: Pu-239 (Y) Dose Equivalent Gram and Kilogram Conversion Factors

Isotopic Composition	Absorption Type	PuE Conversion Factor
WG Pu	Y	2.086
KIS Pu	Y	6.475
Pu-238	Y	2.581E+2
WG Pu	W	2.588
KIS Pu	W	7.088
Pu-238	W	3.512E+2
HEU	Y	4.460E-4
H-3	HTO	4.860E-2

Source: Reference 4.60, Excel spreadsheet attachment tab “PuE_CFs”.
Notes: PuE = Pu-239 (Y) dose equivalent grams or kilograms.
Units of the PuE conversion factors are grams or kilograms Pu-239 (Y) per gram or kilogram of isotopic composition.

3.2.1 K-Area Accidents

3.2.1.1 DMO Glovebox Fire

This accident was based on Event SP-600 in the *Conceptual Safety Design Report (CSDR) for Pit Disassembly and Conversion (PDC) Project* (Reference 4.64) and was identified as Unlikely (10^{-4} ≤ annual frequency < 10^{-2}). In the CSDR, this event was assumed to occur during the non-pit plutonium processing and involve KIS plutonium. During the non-pit plutonium processing, safety class fire suppression would prevent significant releases during a glovebox fire. During the Pit Processing Subproject, fire suppression would be safety significant and would limit the severity and duration of the glovebox fire but may not prevent the event. Therefore, for the SPD Supplemental EIS, the glovebox fire scenario that occurs in a DMO glovebox during the Pit Processing Subproject would result in the release of WG plutonium, not KIS plutonium as was analyzed in the CSDR (Reference 4.64).

Twenty-eight involved workers were estimated to be exposed during this accident. The MAR for this accident is listed in Table 3.2-7. The ARFs and RFs are listed in Table 3.2-1. An LPF of 0.003 was used to incorporate the filtration provided by the HEPA filter and an LPF of 1.0 was used for gases. In this accident, a DR of 0.25 was used to incorporate the effects of fire suppression, which would limit the severity and duration of the glovebox fire. The scenario would result in a release of 2.0 Pu-239 (Y) dose equivalent grams. The release would be from the PDC stack and was estimated to occur over 15 minutes.

3.2.1.2 Multi-Room Fire

This accident was based on Event FW-90 in the CSDR (Reference 4.64) and was identified as Unlikely (10^{-4} ≤ annual frequency < 10^{-2}). The scenario involves a multi-room fire that occurs in the OPH and Canning areas during the Pit Processing Subproject. Twenty-eight involved workers were estimated to be exposed during this accident. The MAR for this accident is listed in Table 3.2-7. The ARFs and RFs are listed in Table 3.2-1. An LPF of 0.003 was used to incorporate the filtration provided by the HEPA filter. In this accident, a DR of 0.25 was used to incorporate the effects of fire suppression, which would limit the severity and duration of the multi-room fire. The scenario would result in a release of 5.3 Pu-239 (Y) dose equivalent grams. The release would be from the PDC stack and was estimated to occur over 30 minutes.

3.2.1.3 Product NDA Room Fire

This accident was based on Event NA-56 in the CSDR (Reference 4.64) and was identified as Unlikely (10^{-4} ≤ annual frequency < 10^{-2}). The scenario involves a fire in the Product NDA area during the Pit Processing Subproject. Twenty-eight involved workers were estimated to be exposed during this accident. The MAR for this accident is listed in Table 3.2-7. The ARFs and RFs are listed in Table 3.2-1. An LPF of 0.003 was used to incorporate the filtration provided by the HEPA filter. In this accident, 1 out of the 34 containers in the Product NDA area were assumed to fail, which is equivalent to a DR of 0.0294. The scenario would result in a release of 2.1 Pu-239 (Y) dose equivalent grams. The release would be from the PDC stack and was estimated to occur over 30 minutes.

Table 3.2-7: MAR and Releases for K-Area Accidents

Event	MAR (PuE kilograms)	Release (PuE grams)
DMO Glovebox Fire	6.4E+1	2.0
Multi-Room Fire	2.6E+2	5.3
Product NDA Room Fire	3.1E+2	2.1
Loss of Ventilation/Cooling in ISM Storage	9.6E+2	3.0E-3
Over-Pressurization of Oxide Storage Cans	5.5E+1	1.2E+1
Plutonium Metal Misfeed into SAN Furnace	1.8E+1	1.6E-3
Loss of Offsite Power	1.3E+3	1.2E-1
SST/SGT Loading Dock Tornado or Tornado-Generated Missile (Non-Pit)	3.8E+2	5.0E-1
SST/SGT Loading Dock Tornado or Tornado-Generated Missile (Pit)	2.8E+2	3.7E-1
Design Basis Seismic-Induced Fire	4.1E+2	6.5E+0
Beyond Design Basis Seismic-Induced Fire	2.2E+3	6.9E+2

Source: Reference 4.60.
Note: Releases are based on the filtration provided by safety class HEPA filtration.
PuE= Pu-239 (Y) dose equivalent kilograms or grams.

3.2.1.4 Loss of Ventilation/Cooling in ISM Storage

This accident was based on Event MS-618 in the CSDR (Reference 4.64) and was identified as Anticipated (annual frequency ≥ 10^{-2}). The scenario involves the loss of ventilation in ISM storage during the Pit Processing Subproject. Twenty-eight involved workers were estimated to be exposed during this accident. The MAR for this accident is listed in Table 3.2-7. The ARFs and RFs are listed in Table 3.2-1. An LPF of 0.00 was used to incorporate the filtration provided by the milk bottle filter, an LPF of 0.003 was used to incorporate the filtration provided by HEPA filters. In this accident, all containers at risk were assumed to fail, which is equivalent to a DR of 1. The scenario would result in a release of 3.0E-3 Pu-239 (Y) dose equivalent grams. The release would be from the PDC stack and was estimated to occur over three minutes.

3.2.1.5 Over-Pressurization of Oxide Storage Cans

This accident was based on Event OH-50 in the CSDR (Reference 4.64) and was identified as Unlikely (10^{-4} ≤ annual frequency < 10^{-2}). The scenario involves the over-pressurization of oxide storage cans in the Product NDA area due to out-of-specification conditions associated with the product plutonium oxide during the Pit Processing Subproject. Twenty-eight involved workers were estimated to be exposed during this accident. The MAR for this accident is listed in

Table 3.2-7. The ARFs and RFs are listed in Table 3.2-1. An LPF of 0.003 was used to incorporate the filtration provided by the HEPA filter. In this accident, all containers at risk were assumed to fail, which is equivalent to a DR of 1. The scenario would result in a release of 12 Pu-239 (Y) dose equivalent grams. The release would be from the PDC stack and was estimated to occur over three minutes.

3.2.1.6 Plutonium Metal Misfeed into SAN Furnace

This accident was based on Event SF-5 in the CSDR (Reference 4.64) and was identified as Unlikely (10^{-4} ≤ annual frequency < 10^{-2}). In this scenario, plutonium pieces are misfed into the SAN furnace during the Pit Processing Subproject. Twenty-eight involved workers were estimated to be exposed during this accident. The MAR for this accident is listed in Table 3.2-7. The ARFs and RFs are listed in Table 3.2-1. An LPF 0.003 was used to incorporate the filtration provided by HEPA filters. In this accident, all material in the SAN furnace was assumed to be at risk, which is equivalent to a DR of 1. The scenario would result in a release of 1.6E-3 Pu-239 (Y) dose equivalent grams. The release would be from the PDC stack and was estimated to occur over 3 minutes.

3.2.1.7 Criticality

This accident was based on Event PD-502 in the CSDR (Reference 4.64) and was identified as Unlikely (10^{-4} ≤ annual frequency < 10^{-2}). Twenty-eight involved workers were estimated to be exposed during this accident. The scenario represents a metal criticality. The metal was postulated to soften, resulting in a 100-percent release of the noncondensible gases and volatile fission products generated in the criticality. However, no aerosolized respirable metal fragments were predicted to be released. There were 1E+19 fissions associated with the criticality, and the ST for this event is listed in Table 3.2-8. The ST for this event is based on a solution criticality, as opposed to a metal criticality, in order to bound the potential criticality ST and to provide a bounding event for both the CSDR (Reference 4.64) and the SPD Supplemental EIS.

The release would be from the PDC stack and was estimated to occur over three minutes. Radiation doses from this event would be negligible for the maximally exposed offsite individual (MOI) (Reference 4.64).

Table 3.2-8: Criticality Source Term

Radionuclide	MAR (Ci)	DR	ARF	RF	LPF	ST (Ci)
Kr-83m	110	1	1	1	1	110
Kr-85m	71	1	1	1	1	71
Kr-85	0.0081	1	1	1	1	0.0081
Kr-87	430	1	1	1	1	430
Kr-88	230	1	1	1	1	230
Kr-89	13,000	1	1	1	1	13,000
Xe-131m	0.1	1	1	1	1	0.1
Xe-133m	2.2	1	1	1	1	2.2
Xe-133	27	1	1	1	1	27
Xe-135m	3,300	1	1	1	1	3,300
Xe-135	410	1	1	1	1	410
Xe-137	49,000	1	1	1	1	49,000
Xe-138	11,000	1	1	1	1	11,000
I-131	11	1	1	1	1	11
I-132	1,200	1	1	1	1	1,200
I-133	160	1	1	1	1	160
I-134	4,300	1	1	1	1	4,300
I-135	450	1	1	1	1	450

Source: Reference 4.65, Table 6-9.
Notes:
Criticality source term is based on 1E+19 fissions.
LPF is based on no krypton, xenon, or iodine removal equipment present in the ventilation system.
Release duration = three minutes.

3.2.1.8 Loss of Offsite Power

This accident was based on Event FW-92 in the CSDR (Reference 4.64) and was identified as Anticipated (annual frequency ≥ 10^{-2}). In the scenario, a loss of offsite power is postulated to occur during the Pit Processing Subproject. This event would result in loss of ventilation in ISM Storage and over-pressurization of oxide storage cans. In addition, material in various process areas would be dropped. Twenty-eight involved workers were estimated to be exposed during this accident. The MAR for this accident is listed in Table 3.2-7. The ARFs and RFs are listed in Table 3.2-1. An LPF of 0.005 was used to incorporate the filtration provided by the milk bottle filter, an LPF of 0.003 was used to incorporate the filtration provided by HEPA filters. In this accident, all material that was over-pressurized or dropped was assumed to be at risk, which is equivalent to a DR of one. The scenario would result in a release of 1.2E-1 Pu-239 (Y) dose equivalent grams. The release would be from the PDC stack. For material released because of over-pressurization, the release was estimated to occur over 30 minutes. For material released because it was dropped, the release was estimated to occur over three minutes.

3.2.1.9 SST/SGT Loading Dock Tornado or Tornado-Generated Missile Impact

This accident was based on Event FW-116 in the CSDR (Reference 4.64) and was identified as Extremely Unlikely (10^{-6} ≤ annual frequency < 10^{-4}). In the scenario, a tornado-generated missile impacts two Type B shipping packages. Six involved workers were estimated to be exposed during this accident. It should be noted that in the CSDR (Reference 4.64), 30 Type B shipping packages were assumed to fail in Event FW-116. In order to provide a more realistic estimate of releases for analysis in the SPD Supplemental EIS, only two shipping packages were assumed to fail, based on a single tornado-generated missile striking and penetrating both shipping packages. In addition, it was assumed that the event could occur during the non-pit plutonium processing or the pit processing.

The MAR for this accident is listed in Table 3.2-7. The ARFs and RFs are listed in Table 3.2-1, and an LPF of 0.1 was used to incorporate the filtration provided by the internal structure of the shipping package. In this accident, 2 out of the 30 shipping packages in the loading dock were assumed to fail, which is equivalent to a DR of 0.0667. During non-pit plutonium processing, the scenario would result in a release of 5.0E-1 Pu-239 (Y) dose equivalent grams. During the Pit Processing Subproject, the scenario would result in a release of 3.7E-1 Pu-239 (Y) dose equivalent grams. The releases would be from ground level and were estimated to occur over 3 minutes.

3.2.1.10 Design Basis Seismic-Induced Fire

This accident was based on Event FW-111a in the CSDR (Reference 4.64) and was identified as Extremely Unlikely (10^{-6} ≤ annual frequency < 10^{-4}). This scenario involves a seismic-induced fire involving the non-pit plutonium processing, non-pit canning, PITD, and CV Unpacking areas during the pit processing. Twenty-eight involved workers were estimated to be exposed during this accident. The MAR for this accident is listed in Table 3.2-7. The ARFs and RFs are listed in Table 3.2-1. An LPF of 0.003 was used to incorporate the filtration provided by the HEPA filter and an LPF of 1.0 was used for gases. In this accident, a DR of 0.25 was used to incorporate the effects of fire suppression, which would limit the severity and duration of the seismic-induced fire. In addition, one out of the 9 outer 3013 cans present in the facility was assumed to fail, which is equivalent to a DR of 0.11. The scenario would result in a release of 6.5 Pu-239 (Y) dose equivalent grams. The release would be from the PDC stack and was estimated to occur over 30 minutes.

3.2.1.11 Beyond Design Basis Seismic-Induced Fire

This accident was based on Event FW-111a in the CSDR (Reference 4.64) and was identified as Beyond Extremely Unlikely (annual frequency < 10^{-6}). This scenario involves a facility-wide seismic-induced fire during the Pit Processing Subproject. Twenty-eight involved workers were estimated to be exposed during this accident. Because the event was assumed to occur during the Pit Processing Subproject, the MAR was based on WG plutonium throughout the facility. This is in contrast to the CSDR (Reference 4.64), where KIS plutonium that is normally associated with non-pit plutonium processing was assumed to be present.

The MAR for this accident is listed in Table 3.2-7. The ARFs and RFs are listed in Table 3.2-1. In this accident, a DR of 0.25 was used to incorporate the effects of fire suppression, which would limit the severity and duration of the seismic-induced fire. A conservative LPF of 0.1 was

used for particulate releases (1.0 for gases) to account for degraded confinement conditions resulting from damaged to the building structure and the confinement ventilation system for a beyond design basis accident (Table F-6 in Reference 4.67 identifies representative LPF values for degraded filter conditions which are less than 0.1). In addition, 1 out of 34, 1 out of nine, and 1 out of five 3013 outer cans present in various areas of the facility were assumed to fail, which is equivalent to DRs of 0.0294, 0.11, and 0.2, respectively. The scenario would result in a release of 690 Pu-239 (Y) dose equivalent grams. The release would be from ground level and was estimated to occur over 30 minutes.

3.2.2 F-Area Accidents

3.2.2.1 DMO Glovebox Fire

This accident was based on Event DO-60 in the Preliminary Documented Safety Analysis (PDSA) (Reference 4.8, Chapter 3.0) and was identified as Unlikely (10^{-4} ≤ annual frequency < 10^{-2}). Twenty-eight involved workers were estimated to be exposed during this accident. The scenario involves a fire that occurs in the DMO glovebox. The MAR for this accident is listed in Table 3.2-9. The ARFs and RFs are listed in Table 3.2-1. An LPF of 0.0049 was used to incorporate the filtration provided by the sand filter and an LPF of 1.0 was used for gases. In this accident, a DR of 0.25 was used to incorporate the effects of fire suppression, which would limit the severity and duration of the glovebox fire. The scenario would result in a release of 2.4 Pu-239 (Y) dose equivalent grams. The release would be from the PDCF stack and was estimated to occur over 30 minutes.

3.2.2.2 Multi-Room Fire

This accident was based on Event FW-90 in the PDSA (Reference 4.8, Chapter 3.0) and was identified as Unlikely (10^{-4} ≤ annual frequency < 10^{-2}). The scenario involves a multi-room fire that occurs in the OPH and DMO-5 areas. Twenty-eight involved workers were estimated to be exposed during this accident. The MAR for this accident is listed in Table 3.2-9. The ARFs and RFs are listed in Table 3.2-1. An LPF of 0.0049 was used to incorporate the filtration provided by the sand filter and an LPF of 1.0 was used for gases. In this accident, a DR of 0.25 was used to incorporate the effects of fire suppression, which would limit the severity and duration of the multi-room fire. The scenario would result in a release of 15 Pu-239 (Y) dose equivalent grams. The release would be from the PDCF stack and was estimated to occur over 30 minutes.

Table 3.2-9: MAR and Releases for F-Area Accidents

Event	MAR (PuE kilograms)	Release (PuE grams)
DMO Glovebox Fire	3.9E+1	2.4
Multi-Room Fire	2.6E+2	1.5E+1
Product NDA Module Room Fire	3.3E+2	3.4
Loss of Ventilation/Cooling in ISM Vault-Type Structure	1.4E+3	7.1E-3
Over-Pressurization of Oxide Storage Cans	5.5E+1	2.0E+1
Over-Pressurization of an Interim Storage Can	9.2	4.7E-5
Plutonium Metal Misfeed into SAN Furnace	1.8E+1	2.7E-3
Loss of Offsite Power	2.0E+3	1.0E-1
SST/SGT Loading Dock Tornado or Tornado-Generated Missile	2.8E+2	3.7E-1
Design Basis Seismic-Induced Fire	2.8E+2	7.7
Beyond Design Basis Seismic-Induced Fire	1.6E+3	6.5E+2
HAW Tank Release	9.9E-4	4.8E-7

Source: Reference 4.60.
Note: PuE= Pu-239 (Y) dose equivalent kilograms or grams.

3.2.2.3 Product NDA Module Room Fire

This accident was based on Event NA-56 in the *Pit Disassembly and Conversion Facility Preliminary Documented Safety Analysis* (Reference 4.8, Chapter 3.0) and was identified as Unlikely ($10^{-4} \leq$ annual frequency $< 10^{-2}$). The scenario involves a fire in the Product NDA Room. Twenty-eight involved workers were estimated to be exposed during this accident. The MAR for this accident is listed in Table 3.2-9. The ARFs and RFs are listed in Table 3.2-1. An LPF of 0.0049 was used to incorporate the filtration provided by the sand filter. In this accident, 1 out of the 36 containers in the Product NDA Module was assumed to fail, which is equivalent to a DR of 0.0278. The scenario would result in a release of 3.4 Pu-239 (Y) dose equivalent grams. The release would be from the PDCF stack and was estimated to occur over 30 minutes.

3.2.2.4 Loss of Ventilation/Cooling in the ISM Vault-Type Structure

This accident was based on Event VL-16 in the PDSA (Reference 4.8, Chapter 3.0) and was identified as Anticipated (annual frequency $\geq 10^{-2}$). The scenario involves the loss of ventilation in the ISM vault-type structure, which can result in over-pressurization of plutonium oxide interim storage containers. Twenty-eight involved workers were estimated to be exposed during this accident. The MAR for this accident is listed in Table 3.2-9. The ARFs and RFs are listed in Table 3.2-1. An LPF of 0.005 was used to incorporate the filtration provided by the milk bottle filter, an LPF of 0.003 was used to incorporate the filtration provided by HEPA filters, and an LPF of 0.0049 was used to incorporate the filtration provided by the sand filter. In this accident, all containers at risk were assumed to fail, which is equivalent to a DR of 1. The scenario would

result in a release of 7.1E-3 Pu-239 (Y) dose equivalent grams. The release would be from the PDCF stack and was estimated to occur over 3 minutes.

3.2.2.5 Over-Pressurization of Oxide Storage Cans

This accident was based on Event OH-50 in the PDSA (Reference 4.8, Chapter 3.0) and was identified as Unlikely (10^{-4} ≤ annual frequency < 10^{-2}). The scenario involves the over-pressurization of storage cans caused by out-of-specification oxide product. Twenty-eight involved workers were estimated to be exposed during this accident. The MAR for this accident is listed in Table 3.2-9. The ARFs and RFs are listed in Table 3.2-1. An LPF of 0.0049 was used to incorporate the filtration provided by the sand filter. In this accident, all containers at risk were assumed to fail, which is equivalent to a DR of 1. The scenario would result in a release of 20 Pu-239 (Y) dose equivalent grams. The release would be from the PDCF stack and was estimated to occur over 3 minutes.

3.2.2.6 Over-Pressurization of an Interim Storage Can

This accident was based on Event OH-3 in the PDSA (Reference 4.8, Chapter 3.0) and was identified as Anticipated (annual frequency ≥ 10^{-2}). The scenario involves the over-pressurization of an interim storage container inside a glovebox caused by excessive heat generation or other off-normal conditions. Twenty-eight involved workers were estimated to be exposed during this accident. The MAR for this accident is listed in Table 3.2-9. The ARFs and RFs are listed in Table 3.2-1. An LPF of 0.005 was used to incorporate the filtration provided by the milk bottle filter, an LPF of 0.003 was used to incorporate the filtration provided by HEPA filters, and an LPF of 0.0049 was used to incorporate the filtration provided by the sand filter. In this accident, the interim storage container was assumed to fail, which is equivalent to a DR of 1. The scenario would result in a release of 4.7E-5 Pu-239 (Y) dose equivalent grams. The release would be from the PDCF stack and was estimated to occur over 3 minutes.

3.2.2.7 Plutonium Metal Misfeed into SAN Furnace

This accident was based on Event SF-5 in the PDSA (Reference 4.8, Chapter 3.0) and was identified as Unlikely (10^{-4} ≤ annual frequency < 10^{-2}). In the scenario, plutonium pieces are misfed into the SAN furnace. Twenty-eight involved workers were estimated to be exposed during this accident. The MAR for this accident is listed in Table 3.2-9. The ARFs and RFs are listed in Table 3.2-1. An LPF of 0.003 was used to incorporate the filtration provided by HEPA filters and an LPF of 0.0049 was used to incorporate the filtration provided by the sand filter. In this accident, all material in the SAN furnace was assumed to be at risk, which is equivalent to a DR of 1. The scenario would result in a release of 2.7E-3 Pu-239 (Y) dose equivalent grams. The release would be from the PDCF stack and was estimated to occur over 3 minutes.

3.2.2.8 Criticality

This accident was based on Event PD-502 in the PDSA (Reference 4.8, Chapter 3.0) and was identified as Unlikely (10^{-4} ≤ annual frequency < 10^{-2}). Twenty-eight involved workers were estimated to be exposed during this accident. The scenario represents a metal criticality. The metal was postulated to soften, resulting in a 100-percent release of the noncondensible gases and volatile fission products generated in the criticality. However, no aerosolized respirable metal fragments were predicted to be released. There were 1E+19 fissions associated with the

criticality, and the ST for this event is listed in Table 3.2-8. The ST for this event is based on a solution criticality, as opposed to a metal criticality, in order to bound the potential criticality ST and to provide a bounding event for both the PDSA (Reference 4.8, Chapter 3.0) and the SPD Supplemental EIS.

The release would be from the PDCF stack and was estimated to occur over 3 minutes. Radiation doses from this event would be negligible for the MOI (Reference 4.64).

3.2.2.9 Loss of Offsite Power

This accident was based on Event FW-92 in the PDSA (Reference 4.8, Chapter 3.0) and was identified as Anticipated (annual frequency ≥ 10^{-2}). In the scenario, a loss of offsite power is postulated to occur. This event would result in loss of ventilation in the Main Vault, the Product Vault, and the ISM vault-type structure, which can result in over-pressurization of oxide storage containers. In addition, material in various process areas would be dropped. Twenty-eight involved workers were estimated to be exposed during this accident. The MAR for this accident is listed in Table 3.2-9. The ARFs and RFs are listed in Table 3.2-1. An LPF of 0.005 was used to incorporate the filtration provided by the milk bottle filter, an LPF of 0.003 was used to incorporate the filtration provided by HEPA filters, and an LPF of 0.0049 was used to incorporate the filtration provided by the sand filter. In this accident, all material that was over-pressurized or dropped was assumed to be at risk, which is equivalent to a DR of 1. In addition, Type B packages and 3013 cans in the vaults were assumed not to fail, which is equivalent to a DR of 0. The scenario would result in a release of 1.0E-1 Pu-239 (Y) dose equivalent grams. The release would be from the PDCF stack. For material released because of over-pressurization, the release was estimated to occur over 30 minutes. For material released because it was dropped, the release was estimated to occur over 3 minutes.

3.2.2.10 SST/SGT Loading Dock Tornado or Tornado Generated Missile

This accident was based on Event FW-116 in the PDSA (Reference 4.8, Chapter 3.0) and was identified as Extremely Unlikely (10^{-6} ≤ annual frequency < 10^{-4}). In the scenario, a tornado-generated missile impacts two Type B shipping packages. Six involved workers were estimated to be exposed during this accident. It should be noted that in the PDSA, 30 Type B shipping packages were assumed to fail in Event FW-116. In order to provide a more realistic estimate of releases for analysis in the SPD Supplemental EIS, two shipping packages were assumed to fail, based on a single tornado-generated missile striking and penetrating two shipping packages.

The MAR for this accident is listed in Table 3.2-9. The ARFs and RFs are listed in Table 3.2-1 and an LPF of 0.1 was used to incorporate the filtration provided by the internal structure of the shipping package. In this accident, 2 out of the 30 shipping packages in the loading dock were assumed to fail, which is equivalent to a DR of 0.0667. The scenario would result in a release of 3.7E-1 Pu-239 (Y) dose equivalent grams. The release would be from ground level and was estimated to occur over 3 minutes.

3.2.2.11 Design Basis Seismic-Induced Fire

This accident was based on Event FW-111a in the PDSA (Reference 4.8, Chapter 3.0) and was identified as Extremely Unlikely (10^{-6} ≤ annual frequency < 10^{-4}). The scenario involves a

seismic-induced fire involving the DMO and Inner and Outer Canning areas. Twenty-eight involved workers were estimated to be exposed during this accident. The MAR for this accident is listed in Table 3.2-9. The ARFs and RFs are listed in Table 3.2-1. An LPF of 0.0049 was used to incorporate the filtration provided by the sand filter and an LPF of 1.0 was used for gases. In this accident, a DR of 0.25 was used to incorporate the effects of fire suppression, which would limit the severity and duration of the seismic-induced fire. The scenario would result in a release of 7.7 Pu-239 (Y) dose equivalent grams. The release would be from the PDCF stack and was estimated to occur over 30 minutes.

3.2.2.12 Beyond Design Basis Seismic-Induced Fire

This accident was based on Events FW-109 and FW-111b in the PDSA (Reference 4.8, Chapter 3.0) and was identified as Beyond Extremely Unlikely (annual frequency < 10^{-6}). The scenario involves a facility-wide seismic-induced fire. Twenty-eight involved workers were estimated to be exposed during this accident. The MAR for this accident is listed in Table 3.2-9. The ARFs and RFs are listed in Table 3.2-1. A conservative LPF of 0.1 was used for particulate releases (1.0 for gases) to account for degraded confinement conditions resulting from damage to the building structure and the confinement ventilation system for a beyond design basis accident. An LPF of 1.0 was used for gases. In this accident, a DR of 0.25 was used to incorporate the effects of fire suppression, which would limit the severity and duration of the seismic-induced fire. In addition, 1 out of 31 and 1 out of 36 3013 outer cans or HEU containers present in various areas of the facility were assumed to fail, which is equivalent to DRs of 0.0323 and 0.0278, respectively. The scenario would result in a release of 650 Pu-239 (Y) dose equivalent grams. The release would be from ground level and was estimated to occur over 30 minutes.

3.2.2.13 HAW Tank Release

This accident was based on the HAW tank rupture in Reference 4.68 and was identified as Unlikely (10^{-4} ≤ annual frequency < 10^{-2}). Under the scenario, two 1,000-gal HAW tanks are contained in the basement of the Pu Processing Building. One of the 1,000-gal tanks was assumed to be full. During a seismic event, the tank was assumed to rupture, resulting in a spill of liquid HAW. Twenty-eight involved workers were estimated to be exposed during this accident. The MAR for this accident is listed in Table 3.2-9. The ARFs and RFs are listed in Table 3.2-1. An LPF of 0.0049 was used to incorporate the filtration provided by the sand filter. All material in the HAW tanks was assumed to be at risk, which is equivalent to a DR of 1. The scenario would result in a release of 4.8E-7 Pu-239 (Y) dose equivalent grams. The release would be from the PDCF stack and was estimated to occur over 30 minutes.

3.3 Nonradiological Impacts from Facility Accidents

At the PDC Project, hazardous chemicals would be present primarily in two areas: the Chemical Injection System and the HVAC Chilled Water System. The chemicals in the Chemical Injection System would be used in the HED process. Chemicals in the HVAC Chilled Water System would be used as corrosion inhibitors or as biocides.

Table 3.3-1 lists the chemicals that would be used for the PDC Project, along with expected amounts that would be supplied in a single delivery and their physical form. This provides a nominal or average (as opposed to worst-case) estimate of the hazards associated with

handling the chemicals. Although these chemicals would be diluted for use, the hazards associated with the chemicals were evaluated based on the chemicals' amount and form as delivered.

Table 3.3-1: Chemicals Used in the Chemical Injection System and the HVAC Chilled Water System

Chemical	Formula	CAS Registry No.	Amount Per Delivery
Sodium Hydroxide (25 weight percent)	NaOH	1310-73-2	55 gal
Sulfuric Acid (95 weight percent)	H_2SO_4	7664-93-9	55 gal
Sodium Sulfate (0.4 M)	Na_2SO_4	7757-82-6	55 gal
Bleach (30 weight percent)	NaOCl	7681-52-9	55 gal
Tolyltriazole (solid)	$C_7H_7N_3$	29385-43-1	50 lbs

Source: Reference 4.69.

The chemical quantities are considered greater than amounts "easily and safely manipulated by one person" and were further evaluated by assuming that there would be a spill of the chemical. The methods and data used to evaluate the consequences of spills of these chemicals were based on the guidance contained in Reference 4.61 and Reference 4.62. Based on this guidance, two receptors were evaluated: a collocated worker located 100 m from the spill and a receptor located at the SRS boundary.

The chemicals listed in Table 3.3-1 are not volatile at room temperatures and have low vapor pressures. Therefore, releases were estimated using the bounding ARFs for less than 3-m free-fall spills of aqueous liquids or powders from DOE-HDBK-3010-94 for airborne releases (Reference 4.63).

The ARF used for free-fall spills of aqueous liquids from less than 3 m is 2.0E-4 (Reference 4.63, page 3-4). The ARF used for free-fall spills of powders from less than 3 m is 2.0E-3 (Reference 4.63, page 4-9). In both cases, the RF was assumed to be 1.0, to account for the ability of some chemicals to act externally without being inhaled. In addition, the DR and LPF for the spills were assumed to be 1.0.

Exposures to these chemicals were estimated using a ground-level release and a 15-minute (900 seconds) averaging time based on DOE-STD-1189, Appendix B (Reference 4.70), for the collocated worker (located 100 m from the spill) and the MOI at the site boundary (located 8.9 km from K-Area). For the collocated worker, exposures were based on a X/Q of 3.5E-3 seconds per cubic meter (s/m^3) from DOE-STD-1189, Appendix A (Reference 4.70), and is based on no buoyancy, F-stability, a 1.0 m/s wind speed at 100 m, a small building size (10 m x 25 m), and a 1-centimeter-per-second deposition velocity (Reference 4.70, page A-4). For the MOI, exposures were based on a X/Q of 1.73E-6 s/m^3, which was the 95th percentile X/Q for 15-minute ground-level releases of plutonium taken from *Unit Release and Consequence Analysis for Radioactive Materials*, Calculation No. 47 CLC-25.03-004 (Reference 4.66) and estimated using the MACCS2 Version 1.13.1 computer code. To estimate the consequences of potential exposures, the atmospheric concentrations estimated for the MOI and the collocated

worker were compared to Protective Action Criteria-2 (PAC-2) and Protective Action Criteria-3 (PAC-3) values, respectively (Reference 4.71).[3]

Table 3.3-2 lists the results of the chemical screening analysis. Additional details are provided in Reference 4.68. This table also lists the results of the chemical screening analysis multiplied by a scaling factor of six as recommended by Reference 4.72. All chemicals were found to be below the PAC-2 limits for the MOI and below the PAC-3 limits for the collocated worker.

Table 3.3-2: Results of Chemical Screening Analysis

Chemical	Offsite Concentration (mg/m^3)[a]	Offsite Concentration with Scaling Factor of 6[b] (mg/m^3)[a]	PAC-2 Concentration (mg/m^3)[c]	100-m Concentration (mg/m^3)[a]	PAC-3 Concentration (mg/m^3)[c]
Sodium hydroxide	2.9E-5	1.8E-04	5	5.9E-2	50
Sulfuric acid	1.4E-4	8.4E-04	8.7	2.8E-1	160
Sodium sulfate	6.9E-6	4.1E-05	500	1.4E-2	500
Bleach	3.0E-5	1.8E-04	50	6.2E-2	500
Tolyltriazole	8.7E-5	5.2E-04	60	1.8E-1	300

Sources:
a. Reference 4.68.
b. Chemical concentrations multiplied by scaling factor of six from Reference 4.72.
c. Reference 4.71.

Note: mg/m^3 = milligrams per cubic meter.

3.4 Occupational Radiation Doses

Workers would be occupationally exposed to radiation during operations at the PDCF at F-Area at the SRS and during PDC operations at K-Area.

In the SPD EIS (Reference 4.7, Table J-48, page J-38), it was estimated that there would be 383 exposed workers at the PDCF. The annual collective radiation dose for these workers was estimated to be 192 person-rem per year, and the individual radiation dose was estimated to be 500 millirem per year.

For PDC operations at K-Area, it was also estimated that there would be 383 exposed workers. The annual collective radiation dose for these workers was estimated to be 192 person-rem per year, and the individual radiation dose was estimated to be 500 millirem per year. These estimates were based on the occupational radiation dose estimates for the PDCF

[3] The order of preference for determining a PAC-2 value is Acute Exposure Guideline Level 2 (AEGL-2)/Emergency Response Planning Guideline 2 (ERPG-2)/Temporary Emergency Exposure Limit 2 (TEEL-2). For determining a PAC-3 value, the order of preference is AEGL-3/ERPG-3/TEEL-3. The AEGL-2 and AEGL-3 values are for a 60-minute exposure period.

(Reference 4.7, Table J-48, page J-38). It should be noted that not all workers at the facility will be occupationally exposed to this amount of radiation and that actual radiation doses are expected to be smaller.

Table 3.4-1 summarizes the occupational radiation doses for operations at the PDCF at F-Area and during PDC operations at K-Area. Additional details are provided in Reference 4.54.

Table 3.4-1: Occupational Radiation Doses for Operations at the PDCF at F-Area and Pit Operations at K-Area

Case	Plutonium Processed (MT/yr)	Number of Exposed Workers	Collective Dose	Individual Dose
			Annual (person-rem/year)	Annual (mrem/year)
F-Area				
PDCF	3.5	383	192	500
K-Area				
PDC	3.5	383	192	500

Source: Reference 4.54.

3.5 Shipments of Plutonium Oxide Product, Plutonium Pits and Clean Metal, HEU, and Byproduct Material

Under the No Action and all action alternatives, pits and clean metal would be transported from the Pantex Plant to SRS to provide plutonium for processing at PDC and later provided to MFFF for processing. Upon receipt at SRS, the pits would be disassembled with HEU and other components generated that would need to be transported from SRS to be dispositioned. Since 1999, when the SPD EIS (Reference 4.7) was published, transport packages that would be used to transport the pits, HEU, and other components generated from disassembly of the pits have changed. In addition, new proposed designs are being developed that would impact how much material would be potentially transported in one shipment. Taking into account the sensitive nature of the estimates, uncertainties pertaining to the completion of transport package designs, weight limitations of the transport vehicles, and scheduling, the number of shipments indicated in Table 3.5-1 are provided for purposes of analysis in the SPD Supplemental EIS to estimate transportation impacts for these materials.

Table 3.5-1: Shipments of Plutonium Oxide Product, Plutonium Pits and Clean Metal, HEU, and Byproduct Material

Case	Shipments			
	Plutonium Oxide Product Onsite	Plutonium Pit and Clean Metal	HEU	Byproduct Material
No Action Alternative	280	1,000	100	30
All Alternatives				
Non-Pit	70			
Pit	350	1,250	125	40

Source: Reference 4.73.

3.6 TRU Waste Volumes and Shipments

3.6.1 PDCF Job Control Waste

TRU waste would be generated during operations at the PDCF at F-Area at the SRS. TRU waste would also be generated during PDC operations at K-Area. This job control waste would be packaged in approved TRU waste 55-gal drums and shipped to WIPP for disposal using Transuranic Package Transporter II (TRUPACT-II) shipping containers.

In the PDCF Waste Management Plan (Reference 4.17, Table ES-1), it was estimated that 140.7 m^3/year (4,970 ft^3/year) of unpackaged TRU waste would be generated. This volume is equivalent to about 180 m^3/year (6,210 ft^3/year) of packaged TRU waste. Based on a drum volume of 0.2 m^3 and an assumed capacity factor of 80 percent, 880 drums of TRU waste would be generated per year. It was estimated that there would be 21 truck shipments per year of TRU waste to WIPP, based upon fourteen 55-gal drums per TRUPACT-II shipping container and three TRUPACT-II shipping containers per truck shipment.

3.6.2 PDC Project Job Control Waste

During the Pit Processing Subproject, it was estimated that there would be 140.7 m^3/year of unpackaged TRU waste generated. This was based on the TRU waste generation rate for the PDCF (Reference 4.17, Table ES-1) and is equivalent to about 180 m^3/year (6,210 ft^3/year) of packaged TRU waste. Based on a drum volume of 0.2 m^3 and an assumed capacity factor of 80 percent, 880 drums of TRU waste would be generated per year. It was estimated that there would be 21 truck shipments per year of TRU waste to WIPP, based upon fourteen 55-gal drums per TRUPACT-II shipping container and three TRUPACT-II shipping containers per truck shipment.

Table 3.6-1 summarizes the volumes and shipments of job control waste to WIPP.

Table 3.6-1: TRU Waste Volumes and Shipments to WIPP

Case	Plutonium Processed (MT/yr)	TRU Waste Volume (m^3/yr)	TRU Waste Shipments per year
F-Area			
PDCF	3.5	180[a]	21
K-Area			
PDC	3.5	180[a]	21
POCs	6.0	8,092.0[a]	1,156

Source: Reference 4.57.
a. Packaged volume.
Note: A POC is a 6-inch standard pipe overpack container packaged in an approved TRU waste 55-gal drum.

3.6.3 Pipe Overpack Containers (POCs)

DOE is considering processing of other non-pit plutonium for shipment to WIPP. The 6 MT could be blended with inert material and disposed of at WIPP. The material would be packaged in 6-inch standard POCs. Each POC would contain about 2 kg of inert material blended with 175 fissile gram equivalent (FGE)[4] of plutonium (Reference 4.74, pages 26 and 80), and would be placed in an approved TRU waste 55-gal drum and shipped to WIPP for disposal using TRUPACT-II shipping containers. A POC would hold about 0.012 m^3 of material; however, the volume of TRU waste disposed of at WIPP was based on the volume of the 55-gal drum (0.2 m^3) because the POCs would not be removed from the approved TRU waste 55-gal drums prior to disposal.

Based on data in Reference 4.74 (page 26), 2.5 MT of non-pit plutonium would contain 2.95E+6 FGE. Therefore, 6 MT of non-pit plutonium would contain 7.08E+6 FGE. Using a loading of 175 FGE per POC (Reference 4.74, page 26), processing 6 MT of non-pit plutonium would generate 40,458 POCs, or 8,092 m^3 of packaged TRU waste. Based on 35 POCs[5] per truck shipment (Reference 4.74, page 81), there would be 1,156 truck shipments of POCs to WIPP.

The 6 MT of non-pit plutonium includes 0.7 MT of plutonium as unirradiated fuel from the Fast Flux Test Facility (FFTF). If the 0.7 MT of FFTF fuel were not processed and shipped to WIPP, then only 5.3 MT of plutonium would be shipped to WIPP. Based on data in Reference 4.4 (page 26), 5.3 MT of plutonium would contain 6.25E+6 FGE. Using a loading of 175 FGE per POC, 5.3 MT of plutonium would generate 35,738 POCs or 7,148 m^3 of packaged TRU waste. Based on 35 POCs per truck shipment (Reference 4.74, page 81), there would be 1,022 truck shipments of POCs to WIPP.

Table 3.6-1 summarizes the volumes and shipments of POCs to WIPP.

[4] A POC may hold 200 FGE. This was reduced to 175 FGE to account for measurement uncertainty (Reference 4.74, p. 80).

[5] A single truck shipment to WIPP would consist of two TRUPACT-II shipping containers with each holding fourteen 55-gal drums and one HalfPact shipping container holding seven 55-gal drums (Reference 4.74, p. 81).

3.6.4 TRU Waste Isotopic Compositions

In order to estimate the MAR for use in transportation accident risk assessments, two plutonium isotopic compositions were evaluated in this analysis: a WG plutonium isotopic composition and the KIS plutonium isotopic composition. The nominal isotopic compositions, activities per gram of material, FGE per gram of material, and decay heat per gram of material are contained in Tables 3.6-2 and 3.6-3.

Table 3.6-2: FGE and Decay Heat Per Gram of Material for Nominal WG Plutonium Isotopic Composition

Radionuclide	Weight Fraction	Specific Activity (Ci/g)	Activity per Gram (Ci/g)	Pu-239 FGE Conversion Factor (FGE/g)	Pu-239 FGE per Gram (FGE/g)	Decay Heat Conversion Factor (W/g)	Decay Heat per Gram (W/g)
Pu-238	0.00050	1.71E+01	8.55E-03	1.13E-1	5.65E-5	5.73E-1	2.87E-4
Pu-239	0.92350	6.21E-02	5.73E-02	1.00	9.24E-1	1.95E-3	1.80E-3
Pu-240	0.06500	2.27E-01	1.48E-02	2.25E-2	1.46E-3	7.16E-3	4.65E-4
Pu-241	0.00000	1.03E+02	0.00E+00	2.25	0.0	3.31E-3	0.0
Pu-242	0.00100	3.93E-03	3.93E-06	7.50E-3	7.50E-6	1.17E-4	1.17E-7
Am-241	0.01000	3.44E+00	3.44E-02	1.87E-2	1.87E-4	1.16E-1	1.16E-3
Total					9.25E-1		3.71E-3

Sources: Reference 4.66; Reference 4.74, Table 3.1-2, and pages 3.1-9 through 3.1-15.
Note: Ci/g = curies per gram; FGE/g = fissile gram equivalent per gram; W/g = watts per gram.

Table 3.6-3: FGE and Decay Heat Per Gram of Material for Nominal KIS Plutonium Isotopic Composition

Radionuclide	Weight Fraction	Specific Activity (Ci/g)	Activity per Gram (Ci/g)	Pu-239 FGE Conversion Factor (FGE/g)	Pu-239 FGE per Gram (FGE/g)	Decay Heat Conversion Factor (W/g)	Decay Heat per Gram (W/g)
Pu-238	0.00040	1.71E+01	6.84E-03	1.13E-1	4.52E-5	5.73E-1	2.29E-4
Pu-239	0.87800	6.21E-02	5.45E-02	1.00	8.78E-1	1.95E-3	1.71E-3
Pu-240	0.11540	2.27E-01	2.62E-02	2.25E-2	2.60E-3	7.16E-3	8.26E-4
Pu-241	0.00370	1.03E+02	3.81E-01	2.25	8.33E-3	3.31E-3	1.22E-5
Pu-242	0.00260	3.93E-03	1.02E-05	7.50E-3	1.95E-5	1.17E-4	3.04E-7
Am-241	0.06250	3.44E+00	2.15E-01	1.87E-2	1.17E-3	1.16E-1	7.25E-3
Total					8.90E-1		1.00E-2

Sources: Reference 4.66; Reference 4.74, Table 3.1-2, pages 3.1-9 through 3.1-15.
Note: Ci/g = curies per gram; FGE/g = fissile gram equivalent per gram; W/g = watts per gram.

The Pu-239 FGE limit for the TRUPACT-II shipping container containing 55-gal drums is 325 FGE (Reference 4.74, Table 3.1-1 and page 3.1-4). Based on the TRUPACT-II holding fourteen 55-gal drums, the limit would result in an average of 23.2 FGE per drum. Incorporating a 20-percent measurement uncertainty, the per-drum average would be 18.57 FGE.

$$18.57 \text{ FGE/drum} = \frac{325 \text{ FGE}}{14 \text{ drums}} \times 0.8$$

3.6.4.1 Grams of WG Plutonium per Drum of Job Control Waste

For WG plutonium, a single 55-gal drum could contain a MAR of 20 grams of plutonium based on the per-drum average of 18.57 FGE. Based on the calculated decay heat of 0.00371 W/g of WG plutonium (see Table 3.6-2), this drum would have an associated decay heat of 0.074 watts, which is in the range of decay heats for solid organic waste in 55-gal drums[6] that can be shipped in the TRUPACT-II shipping container (Reference 4.74, Table 5.2-1). The WG plutonium decay heat calculation is as follows:

$$20 \text{ grams WG Pu/drum} = \frac{18.57 \text{ FGE/drum}}{0.925 \text{ FGE/g WG Pu}}$$

$$0.074 \text{ watts/drum} = 20 \text{ grams WG Pu} \times 3.71\text{E-3 watts/g WG Pu}$$

3.6.4.2 Grams of KIS Plutonium per Drum of Job Control Waste

For KIS plutonium, a single 55-gal drum could contain a MAR of 20.9 grams of plutonium based on the per-drum average of 18.57 FGE. Based on the calculated decay heat of 0.010 W/g of KIS plutonium (see Table 3.6-3), this drum would have an associated decay heat of 0.21 watts. This decay heat exceeds the range of decay heats for solid organic waste that can be shipped in the TRUPACT-II shipping container (Reference 4.74, Table 5.2-1).

In order to make TRU waste containing KIS plutonium shippable in the TRUPACT-II, the amount of KIS plutonium was reduced to a MAR of 10 grams/drum, which corresponds to a decay heat of 0.10 watts.

$$20.9 \text{ grams KIS Pu/drum} = \frac{18.57 \text{ FGE/drum}}{0.890 \text{ FGE/g KIS Pu}}$$

$$0.21 \text{ watts/drum} = 20.9 \text{ grams KIS Pu} \times 1.00\text{E-2 watts/g KIS Pu}$$

$$10 \text{ grams KIS Pu/drum} = \frac{0.1 \text{ watts/drum}}{1.00\text{E-2 watts/g KIS Pu}}$$

[6] For example, alphanumeric payload shipping category III.1A3f with a decay heat limit of 0.0937 watt.

3.6.4.3 Grams of KIS Plutonium per POC

In Reference 4.74, KIS plutonium was shown to yield higher radiation doses per gram released than WG plutonium. Therefore, in order to estimate the MAR for use in transportation accident risk assessments, the plutonium in POCs was assumed to be KIS plutonium. There is a 200-FGE limit for POCs and a 2,800 FGE limit for the TRUPACT-II shipping container (Reference 4.74, Table 3.1-1, p. 3.1-4). The 200-FGE limit was reduced to 175 FGE to account for measurement uncertainty (Reference 4.74, pages 26 and 80). This is equivalent to a MAR of 197[7] grams of KIS plutonium/drum. This amount of KIS plutonium would also meet the 2,800-FGE limit for the TRUPACT-II shipping container.

$$197 \text{ grams KIS Pu/drum} = \frac{175 \text{ FGE/drum}}{0.890 \text{ FGE/g KIS Pu}}$$

$$2450 \text{ FGE} = 197 \text{ grams KIS Pu/drum} \times 0.890 \text{ FGE/g KIS Pu} \times 14 \text{ drums}$$

[7] This MAR should not be used to estimate the number of shipments.

4.0 REFERENCES

4.1 65 FR 1608 – 1620, *Record of Decision for the Surplus Plutonium Disposition Final Environmental Impact Statement*, U.S. Department of Energy, January 11, 2000.

4.2 Y-AES-K-00002, *Refinement Study of the K-Area Complex (KAC) Combination Project which provides Pit Disassembly and Conversion Capability and Plutonium Preparation Project Capability*, UCNI Document, National Nuclear Security Administration, Rev. 0, September 29, 2009.

4.3 DOE/EA-1538*, Environmental Assessment for the Safeguard and Security Upgrades for Storage of Plutonium Materials at the Savannah River Site*, U.S. Department of Energy, Savannah River Operations Office, Savannah River Site, December 2005.

4.4 Y-AES-G-00009, *Feasibility Study for the Disposition of 5 MT of Surplus Non-Pit Plutonium*, Savannah River Site, Rev. 0, September 24, 2009.

4.5 77 FR 1920 – 1923, *Second Amended Notice of Intent To Modify the Scope of the Surplus Plutonium Disposition Supplemental Environmental Impact Statement and Conduct Additional Public Scoping*, U.S. Department of Energy, January 12, 2012.

4.6 75 FR 41850 – 41853, *Amended Notice of Intent to Modify the Scope of the Surplus Plutonium Disposition Supplemental Environmental Impact Statement and Conduct Additional Public Scoping*, U.S. Department of Energy, July 19, 2010.

4.7 DOE/EIS-0283, *Surplus Plutonium Disposition Final Environmental Impact Statement*, U.S. Department of Energy, November 1999.

4.8 S-PSA-F-00001, *Pit Disassembly and Conversion Facility Preliminary Documented Safety Analysis*, URS, Rev. 0, Draft, UCNI Document, June 30, 2009.

4.9 D. Stimac, SRNS, e-mail to R. Reddick, Battelle; *Subject: FW: Request for Information Review and Release has been Approved, SRNS-J2300-2011-00005*, SPD_SEIS DATA CALL RESPONSE - MOX LOCATION.PPT, Rev. 0, March 7, 2011.

4.10 Schedule Basis, *CD-2 Baseline, Pit Disassembly and Conversion Facility*, URS-Washington Division, May 13, 2008.

4.11 I. Gourneau, URS PDC Design Engineering Manager, e-mail to R. Reddick, Battelle PDC Environmental Discipline Lead; *Subject: RE: SPD SEIS - Sand & Gravel and Crushed Stone for Construction of Stand-alone PDCF*, October 21, 2011.

4.12 I. Gourneau, URS PDC Design Engineering Manager, e-mail to R. Reddick, Battelle PDC Environmental Discipline Lead; *Subject: SPD SEIS - Sand & Gravel and Crushed Stone for Construction of Stand-alone PDCF*, October 26, 2011.

4.13 Document No. B-PDCF-1-01-059, *Pollution Prevention Design Assessment for the Facility Design*, Washington Group International, Rev 1, December 22, 2006.

4.14 Calculation No. Q-CLC-K-00182, *Criteria Pollutant Emission Estimates from Construction Activities*, URS-Washington Division, Rev. 1, August 5, 2011.

4.15 R. Reddick, Battelle, e-mail to C. Williams, SRNS, *Subject: RE: SPD SEIS - Updated Action Item List*, October 28, 2010.

4.16 K. Iverson, URS, personal conversation with R. Reddick, Battelle, Design Team work force estimated, October 14, 2010.

4.17 Q-PRP-F-00001, *Pit Disassembly and Conversion Facility Waste Management Plan*, Washington Group International, Rev. 1, June 30, 2005.

4.18 Compilation of Air Pollutant Emission Factors AP-42, Fifth Edition, Volume I: *Stationary Point and Area Sources, Chapter 13, Miscellaneous Sources*, EPA Office of Air Quality Planning and Standards, January 1995.

4.19 URBEMIS2007 for estimating air emissions from land use development projects, California Air Resources Board (CARB), Windows Version 9.2.4, 2007.

4.20 Calculation No. 47E-CLC-25.02-005, *Greenhouse Gas Emissions for Construction and Operations of Pit Disassembly and Conversion Facility*, URS, Rev 0, January 31, 2012.

4.21 WSRC-RP-00330, *Pit Disassembly and Conversion Facility Environmental Permit and Compliance Plan*, Washington Savannah River Company, Rev. 3, April 21, 2008.

4.22 B. Blunt, SRNS, e-mail to M. Rectanus, Battelle, *Subject: EIS Emission Calc*, September 13, 2010.

4.23 PDCF Data Call Response-030508, Washington Group International, March 5, 2008.

4.24 B-PDCF-1-02-033, *Pit Disassembly and Conversion Facility NEPA Review*, Washington Group International, Rev A, March 2, 2007.

4.25 Calculation No. X-CLC-F-00288, Revision 4, *Nitrogen Supply Mass Balance*, Washington Group International, August 6, 2005.

4.26 Calculation No. X-CLC-F-00286, Revision 2, *Argon and Helium Supply Mass Balance*, Washington Group International, August 6, 2005.

4.27 Drawing No. SK-12-010, *Pit Disassembly and Conversion Facility Overall Stormwater Basin Configuration*, U.S. Department of Energy, Rev. P, June 12, 2003.

4.28 R. Spaulding, SRNS, e-mail to R. Reddick, Battelle, *Subject: RE: PDC Constructions Manhours for SEIS*, October 11, 2010.

4.29 R. Spaulding, SRNS, e-mail to R. Reddick, Battelle, *Subject: RE: PDC Constructions Manhours for SEIS*, October 4, 2010.

4.30 2010 SPD SEIS Preparation PuP Data Call-(2) Consolidated, August 30, 2010.

4.31 DOE-STD-3013-2004, *DOE Standard, Stabilization, Packaging, and Storage of Plutonium-Bearing Materials*, April 2004.

4.32 G-CDR-K-00003, *Plutonium Preparation Project (U) K Area Conceptual Design Report (CDR) and Critical Decision 1 (CD-1B) (Approve Alternative Selection and Cost Range)*, Savannah River Nuclear Solutions (SRNS), Rev. 0, April, 8, 2009.

4.33 F. Voshell, URS, e-mail to R. Reddick, Battelle, *Subject: Emailing: S&P HVAC Diagram.pdf*, July 18, 2011.

4.34 D. Fleiss, URS, e-mail to R. Reddick, Battelle, *Subject: Initial DRAFT ROM Staffing Estimate for PDC "Low Scope,"* February 2, 2011.

4.35 Calculation No. Q-CLC-K-00184, *F/H Laboratory Emissions for the Supplemental Surplus Plutonium Environmental Impact Statement*, URS-Washington Division, Rev. 0, May 3, 2011.

4.36 Developed from Sketch SK-PDC-12-007, Original Sketch OUO. *Non-OUO Plot Plan Segments created for SEIS Data Call 8-26-10 as "Reference 4 – Plot Plan Segments,"* URS-Washington Division, Rev. B, December 16, 2010.

4.37 R. Reddick, Battelle, e-mail to C. Shedrow, *Subject: RE: Fw: Questions on land use data for SPD SEIS*, URS-Washington Division, October 4, 2010.

4.38 SRW-50.04-10-001, *Conceptual Fire Hazard Analysis*, CD-1, Rev. A, July 2010.

4.39 F. Voshell, URS, e-mail to R. Reddick, Battelle, *Subject: Update on Figure*, February 14, 2011.

4.40 Drawing No. SK-PDC-18-016, URS-Washington Division, July 19, 2010.

4.41 C-SRW-60.01-10-001, *Master Plot Plan Report*, Rev. 0, January 25, 2011.

4.42 Drawing PMC\For_Randy\East_View_D.dgn, URS-Washington Division, June 8, 2011.

4.43 Drawing PMC\For_Randy\South_View_D.dgn, URS-Washington Division, June 8, 2011.

4.44 Drawing No. SK-PDC-18-017, URS-Washington Division, July 19, 2010.

4.45 R. Spaulding, SRNS, e-mail to R. Reddick, Battelle, *Subject: PDC Constructions Manhours for SEIS*, September 28, 2010.

4.46 R. Spaulding, personal conversation with R. Reddick, estimated Construction Mgrs, Field Eng, etc. to be 30% of construction craft workers, October 8, 2010.

4.47 K. Iverson, URS, personal conversation with Randy Reddick, Battelle, Design Team work force estimated.

4.48 SRB-25.02-10-0018, Waste Management Plan for Pit Disassembly and Conversion (PDC) Project, National Nuclear Security Administration, Rev C, February 15, 2011.

4.49 SRB-25.02-11-0002, Stormwater Assessment for Pit Disassembly and Conversion (PDC) Project (OUO), National Nuclear Security Administration, Rev B, March 7, 2011.

4.50 2010 SPD SEIS Preparation PDC and PuP Data Call (U-NU), September 22, 2010.

4.51 R. Spaulding, SRNS, e-mail to R. Reddick, Battelle, Subject: Re: FW: Construction Electrical and Water Usage, October 28, 2010.

4.52 R. Charles, URS, e-mail to J. DiMarzio, SAIC, Subject: Chapter 4 tables, October 15, 2010.

4.53 B. Blunt, URS, e-mail to R. Reddick, Battelle, Subject: Updated Electrical Usage Table, December 13, 2010.

4.54 Calculation No. Q-CLC-K-00178, Occupational Radiation Doses for the Supplemental Surplus Plutonium Disposition Environmental Impact Statement, URS-Washington Division, Rev. 0, May 3, 2011.

4.55 Calculation 47E-CLC-2502-005, Routine Radiological Air Emissions, URS-Washington Division, Denver, Colorado, Rev P1, April 13, 2012.

4.56 SRW-40.17-1D-002, Utility Wastewater Management Study, URS-Washington Division, Rev. P1, May 2010.

4.57 Calculation No. Q-CLC-K-00179, *Transuranic Waste Volumes and Shipments for the Supplemental Surplus Plutonium Disposition Environmental Impact Statement*, URS-Washington Division, Rev. 0, May 31, 2011.

4.58 Calculation No. Q-CLC-K-00183, Ambient Air Pollutant Concentration Estimates from Operational and Construction Emissions, URS-Washington Division, Rev. 0, May 12, 2011.

4.59 Memorandum to Regional Air Division Directors, “Additional Clarification Regarding Application of Appendix W Modeling Guidance for the 1-hr NO_2 National Ambient Air Quality Standard,” T. Fox, EPA Office of Air Quality Planning and Standards, March 1, 2011.

4.60 Calculation No. 47E-CLC-25.02-004, Radiological Impacts from Facility Accidents Under Three Alternatives for the Supplemental Surplus Plutonium Disposition Environmental Impact Statement, URS Washington Division, Denver, Colorado, April 13, 2012.

4.61 Recommendations for the Preparation of Environmental Assessments and Environmental Impact Statements, Second Edition, U.S. Department of Energy, December 2004.

4.62 Recommendations for Analyzing Accidents under the National Environmental Policy Act, U.S. Department of Energy, July 2002.

4.63 DOE-HDBK-3010-94, Change Notice 1, Airborne Release Fractions/Rates and Respirable Fractions for Non-Reactor Nuclear Facilities, Department of Energy, March 2000.

4.64 SRB-25.03-10-004, Conceptual Safety Design Report (CSDR) for Pit Disassembly and Conversion (PDC) Project, National Nuclear Security Administration, Rev. 1, November 10, 2010.

4.65 DOE/EM/NTP/HB-01, A Resource Handbook on DOE Transportation Risk Assessment, Chen S.Y., F. Monette, B.M. Biwer, C. Detrick, T. Dunn, R. Pope, R. Luna, R. Yoshimura, R. Weiner, S. Maheras, and S. Bhatnagar, 2002.

4.66 Calculation No. 47-CLC-25.03-004, Unit Release and Consequence Analysis for Radioactive Materials, URS-Washington Division, Rev. P2, June 2011.

4.67 NUREG/CR-6410, Nuclear Fuel Cycle Facility Accident Analysis Handbook, U.S. Nuclear Regulatory Commission, Science Applications International Corporation, March 1998.

4.68 S-EHA-F-00005, Pit Disassembly and Conversion Facility Emergency Preparedness Hazards Assessment, Washington Group International, Rev. C, January 26, 2005.

4.69 Nonradiological Impacts from Facility Accidents for the Supplemental Surplus Plutonium Disposition Environmental Impact Statement, URS-Washington Division, Rev. 0, May 4, 2011.

4.70 DOE-STD-1189-2008, Integration of Safety into the Design Process, U.S. Department of Energy, March 2008.

4.71 Protective Action Criteria (PAC) with AEGLs, ERPGs, & TEELs: Rev. 26 for Chemicals of Concern (09/2010), U.S. Department of Energy Subcommittee on Consequence Assessment and Protective Actions (SCAPA), 2010, http://www.atlintl.com/DOE/teels/teel.html.

4.72 Calculation No. 47-CLC-25.03-007, Scaling Factor for Unit Release Dose Potentials Estimated Using SRS Meteorological Data, URS Washington Division, Rev. P2, February 2012.

4.73 Calculation No. Q-CLC-K-00180, Plutonium Oxide Product, Plutonium Pit and Clean Metal, Highly Enriched Uranium, and Byproduct Material Shipments for the Supplemental Surplus Plutonium Disposition Environmental Impact Statement, URS-Washington Division, Rev. 0, August 4, 2011.

4.74 Contact-Handled Transuranic Waste Authorized Methods for Payload Control (CH-TRAMPAC), Rev. 3, U.S. Department of Energy, February 2009.

5.0 PDC PROJECT ACRONYMS, ABBREVIATIONS, UNITS, AND CHEMICAL SYMBOLS

5.1 Acronyms

AED	Aerodynamic Equivalent Diameter
AEGL	Acute Exposure Guideline Level
AFS	Alternate Feed Stock
AGV	Automated Guided Vehicle
ARF	Airborne Release Fraction
C&D	Construction and Demolition
CAM	Continuous Air Monitor
CARB	California Air Resources Board
CAS	Chemical Abstracts Service
CD	Critical Decision
CPA	Cargo Pallet Assembly
CRSS	Criticality Safety System
CRT	Cargo Restraint Transporter
CSDR	Conceptual Safety Design Report
CSSC	Container Surveillance and Storage Capability
CSWTF	Central Sanitary Waste Treatment Facility
CV	Containment Vessel
D&R	Dismantle and Removal
DMO	Direct Metal Oxidation
DOE	Department of Energy
DOT	Department of Transportation
DR	Damage Ratio
ECF	Entry Control Facility
EIS	Environmental Impact Statement
EPA	U.S. Environmental Protection Agency
ERPG	Emergency Response Planning Guideline
ETP	Effluent Treatment Project
FFTF	Fast Flux Test Facility
FGE	Fissile Gram Equivalent
FTE	Full-Time Equivalent
FWCB	Firewater Containment Basin
FWSS	Fire Water Supply System
GRIS	Gamma Ray Isotopic System
HAW	High-Activity Waste
HED	HEU Electrolytic Decontamination
HEPA	High Efficiency Particulate Air
HEU	Highly Enriched Uranium
HEUM	Main HEU Process Module
HVAC	Heating, Ventilation, and Air Conditioning
ICD	Interface Control Document
ICRP	International Commission on Radiological Protection
ISM	Interim Storage Module
ITS	Internal Transport System
KAMS	K-Area Material Storage

KIS	K-Area Interim Surveillance
LAW	Low-Activity Waste
LLW	Low-Level Waste
LOI	Loss on Ignition
LPF	Leak Path Factor
LVCW	Limited Volume Cooling Water
M&SEB	Mechanical & Support Equipment Building
MAA	Material Access Area
MACCS	MELCOR Accident Consequence Code System
MAR	Material at Risk
MC&A	Material Control and Accountability
MCC	Motor Control Center
MFFF	Mixed Oxide Fuel Fabrication Facility
MOI	Maximally Exposed Offsite Individual
MT	Metric Ton (1,000 Kilograms)
NAAQS	National Ambient Air Quality Standards
NDA	Non-Destructive Assay
NEPA	National Environmental Policy Act
NFPA	National Fire Protection Association
NIM	Nuclear Incident Monitor
NOI	Notice of Intent
NP	Natural Phenomenon
OEC	Operations and Engineering Center
OPH	Oxide Product Handling
PAC	Protective Action Criteria
PAH	Polycyclic Aromatic Hydrocarbon
PC	Performance Category
PCBs	Polychlorinated Biphenyls
PCW	Process Cooling Water
PDC	Pit Disassembly and Conversion
PDCF	Pit Disassembly and Conversion Facility
PDSA	Preliminary Documented Safety Analysis
PICN	Product Inner Canning
PIDAS	Perimeter Intrusion Detection and Assessment System
PM	Particulate Matter
$PM_{2.5}$	Particulate Matter with aerodynamic diameter of 2.5 microns or less
PM_{10}	Particulate Matter with aerodynamic diameter of 10 microns or less
POC	Pipe Overpack Container
POCN	Product Outer Canning
RCRA	Resource Conservation and Recovery Act
RCT	Radiological Control Technician
RF	Respirable Fraction
ROD	Record of Decision
SCF	Standard Cubic Foot
SCDHEC	South Carolina Department of Health and Environment Control
SGT	Safeguards Transporter
SI	Sealed Insert
SNM	Special Nuclear Material
SPD	Surplus Plutonium Disposition

SRL	Special Recovery Line
SRS	Savannah River Site
SSCs	Structures, Systems, and Components
SST	Safe Secure Trailer
ST	Source Term
TED	Total Effective Dose
TEEL	Temporary Emergency Exposure Limit
TGA-FTIR	Thermo-Gravimetric Analyzer-Fourier Transform Infrared
UPS	Uninterruptible Power Supply
VOC	Volatile Organic Compound
WG	Weapons-Grade
WIPP	Waste Isolation Pilot Plant
WSB	Waste Solidification Building

5.2 Abbreviations

HYD	Hydride/Dehydride
MOX	Mixed Oxide
PICN	Product Inner Canning
PITD	Pit Disassembly
POCN	Product Outer Canning
PuP	Plutonium Preparation Project
SAN	Sanitization (System)
TRU	Transuranic
TRUPACT-II	Transuranic Package Transporter II
URBEMIS	Urban Emissions
Yr	Year

5.2 Units and Chemical Symbols

Btu	British Thermal Unit
CH_4	Methane
Ci	Curie
cfm	Cubic Feet per Minute
cm	Centimeter
cm/s	Centimeters per Second
CO	Carbon Monoxide
ft	Foot
ft^2	Square Foot
ft^3	Cubic Foot
g	Gram
gal	Gallon
hr	Hour
kg	Kilogram
km	Kilometer
kV	Kilovolt
kW	Kilowatt
lb	Pound

µg	Microgram
µm	Micrometer
m	Meter
m^3	Cubic Meter
m/s	Meters per Second
mg	Milligram
mg/m^3	Milligrams per Cubic Meter
ml	Milliliter
N_2O	Nitrous Oxide
NOx	Nitrogen Oxides
Pu	Plutonium
s/m^3	Seconds per Cubic Meter
SO_2	Sulfur Dioxide
tpy	Tons per Year
V	Volt
W	Watt