WSRC-SA-96-26
REV. 10

CENTRAL LABORATORY FACILITY - BUILDINGS 772-F, 772-1F, AND 772-4F

SAFETY ANALYSIS REPORT

August 2010

Savannah River
Nuclear Solutions, LLC
A Fluor Daniel Partnership SM

UNCLASSIFIED
Does Not Contain Unclassified Controlled Nuclear Information
DC/RO: Jim Buha/NNP-DAE
Date: 12/21/2010

Table of Contents

Chapter	Revision	Title
Exec.	10	Executive Summary
1	8	Site Characteristics
2	10	Facility Description
3	10	Hazard and Accident Analysis
4	10	Safety Structures, Systems, and Components
5	10	Derivation of Technical Safety Requirements
6	8	Prevention of Inadvertent Criticality
7	9	Radiological Protection
8	8	Hazardous Material Protection
9	8	Radioactive and Hazardous Waste Management
10	8	Initial testing, In-Service Surveillance, and Maintenance
11	10	Operational Safety
12	8	Procedures and Training
13	8	Human Factors
14	8	Quality Assurance
15	8	Emergency Preparedness Program
16	8	Provisions for Decontamination and Decommissioning
17	9	Management, Organization, and Institutional Safety Provisions

Revision Summary

Revision	Date	Chapters Affected	Description of Change
0	September 1997	all	Initial release
1	October 2002	all	Update
2	October 2004	all	Annual Update
3	April 2006	Exec. Sum, 1, 2, 3, 4, 6, 7, 9, 11, 13, and 15	Annual Update
4	November 2006	Exec. Sum, 1, 2, 3, 4, 5, 11, and 13	• Incorporate tornado Calc. Rev. for 772-1F • Rework Chapter 3 for CHA • Update to E7, 2.25, Rev. 14 • Add SAC to SAR • Add new Explosion discussions and Calcs for VOCs and shock sensitives. (deflagration/detonation) • Revised GSAR references
5	March 2008	All	• Updated GSAR reference to Site Support Document • Replaced CLAB with F/H Lab • Incorporated new accident calculation for B-25 facility segment • Removed content related to TEXT system
6	March 2009	Chapters 2, 3, 4, 6, 9, and 11	Incorporated USQE for: • Facility changes to Tank F • Flammables in shielded cells • New criticality safety procedures

Revision	Date	Chapters Affected	Description of Change
7	October 2009	5	Added Critical Lift Program
8	March 2010	All	Annual Update
9	April 2010	5, 7, 17	Changed minimum staffing requirements
10	August 2010	Exec. Sum., 2, 3, 4, 5, 11	Incorporate the flashing spray fire events into the safety basis and close the F/H Laboratory's Full Facility Flash Spray Justification for Continued Operations (JCO), S-JCO-F-00001 Rev.1

WSRC-SA-96-26
REV. 10

CENTRAL LABORATORY FACILITY - BUILDINGS 772-F, 772-1F, AND 772-4F SAFETY ANALYSIS REPORT

EXECUTIVE SUMMARY

August 2010

Savannah River
Nuclear Solutions, LLC
A Fluor Daniel Partnership

DISCLAIMER

This document was prepared by Savannah River Nuclear Solutions LLC (SRNS), under contract with the United States Department of Energy (DOE).

Release to and Use by Third Parties. As it pertains to releases of this document to third parties, and the use of or reference to this document by such third parties in whole or in part, neither SRNS, DOE, nor their respective officers, directors, employees, agents, consultants or personal services contractors (i) make any warranty, expressed or implied, (ii) assume any legal liability or responsibility for the accuracy, completeness, or usefulness, of any information, apparatus, product or process disclosed herein or (iii) represent that use of the same will not infringe privately owned rights. Reference herein to any specific commercial product, process, or service by trademark, name, manufacture or otherwise, does not necessarily constitute or imply endorsement, recommendation, or favoring of the same by SRNS, DOE or their respective officers, directors, employees, agents, consultants or personal services contractors. The views and opinions of the authors expressed herein do not necessarily state or reflect those of the United States Government or any agency thereof.

CONTENTS

Page

EXECUTIVE SUMMARY ES-1

E.1 FACILITY BACKGROUND AND MISSION ES-1

E.2 FACILITY OVERVIEW ES-1

E.3 FACILITY HAZARD CLASSIFICATION ES-2

E.4 SAFETY ANALYSIS OVERVIEW ES-3

E.5 ORGANIZATIONS ES-4

E.6 SAFETY ANALYSIS CONCLUSIONS ES-4

E.7 SAFETY ANALYSIS REPORT ORGANIZATION ES-5

E.8 REFERENCES ES-6

E.9 TABLES ES-7

TABLES

Page

Table E-1 F/H Lab Hazardous Energy Source Groups, Events, and Prevention/Mitigation Features.....ES-7

Table E-2 F/H Lab Hazardous Material Source Groups, Events, and Prevention/Mitigation Features.....ES-9

ACRONYMS AND ABBREVIATIONS

DOE	Department of Energy
F/H Lab	F/H Area Laboratory
MOI	Maximally Exposed Offsite Individual
OEP	Onsite Evaluation Point
SAR	Safety Analysis Report
SRNS	Savannah River Nuclear Solutions
SRS	Savannah River Site
STD	Standard
TSR	Technical Safety Requirement
WSRC	Washington Savannah River Company

EXECUTIVE SUMMARY

E.1 FACILITY BACKGROUND AND MISSION

This Safety Analysis Report (SAR) was prepared for the F/H Area Laboratory (F/H Lab), which is part of the Savannah River Site (SRS). The primary mission of the F/H Lab over the last 50 years has been to support the chemical separations processing activities in F-Area and H-Area. Samples received from the canyons and B-Lines are subjected to the required radiological and chemical tests. Results from these tests are used to effectively operate the canyons. The F/H Lab also supports tank farm operations, reactor area programs, the Effluent Treatment Facilities, and the site waste characterization/remediation effort.

The projected future use of the facility is to support the current and new SRS initiatives including continued support of the processing activities in H-Canyon as well as support for waste disposition, material disposition, and area closure activities in line with Environmental Management missions.

The F/H Lab includes Buildings 772-F, 772-1F, and 772-4F, and the B-25 waste container staging areas. The LR-56S loading station supports the 772-F facility. Building 772-F is of blast-resistant concrete construction and was placed in service in the mid 1950s. Building 772-1F is of standard commercial steel and concrete block construction and began operations in October 1987. Building 772-4F is of steel construction in accordance with Department of Energy (DOE) requirements and was placed in service in July 1993. No construction is associated with the B-25 waste container staging areas.

E.2 FACILITY OVERVIEW

SRS occupies portions of Aiken, Allendale, and Barnwell Counties on the western border of South Carolina. The F/H Lab is part of the 200-F Area located near the center of SRS, between Upper Three Runs Creek to the north and Four Mile Branch to the south. The largest facility in the 200-F Area is the F-Canyon. The F/H Lab is located immediately to the northwest of F-Canyon.

The F/H Lab interfaces with other facilities located within the 200-F Area. The off gas exhaust system, which exhausts air from the gloveboxes in Building 772-F, discharges to the main exhaust system in 772-4F. The off gas exhaust system, which exhausts air from the gloveboxes in Building 772-1F, discharges to the building's main exhaust system. Both low and high activity radioactive and chemical liquids generated by sample analysis, safety shower testing, laboratory sinks, etc., are temporarily placed into the low and high-activity transfer tanks. The high-activity returns are transferred by pump to an LR56S for transfer to the H-Area. The low-activity waste is pumped through a process sewer and sent to the Effluent Treatment Facilities for disposal. Chilled water used in six Air Handling Units in Building 772-F and two Air Handling Units in Building 772-1F are supplied by chillers located in Building 285-3F, Central Chiller Facility.

Other significant external interfaces include the following utilities and support systems:

- Normal electrical power is supplied to Buildings 772-F and 772-4F from two substations located on the west side of Building 772-F. Normal electrical power is supplied to Building 772-1F from a substation located at the southeast corner of the facility. Standby electrical power for all three buildings is supplied by several diesel generators.
- Buildings 772-F, 772-1F, and 772-4F are supplied with sprinkler system water from the F-Area fire protection water system. As a backup to the fire protection systems in the F/H Lab, the SRS Fire Department has several fully staffed and equipped fire stations.
- Steam is supplied to Buildings 772-F and 772-1F for use in the heating, ventilation, and air conditioning system, and to steam ejectors in the low-activity drain tank system. Steam is not supplied to Building 772-4F.
- Buildings 772-F and 772-1F have a main holding area for B-25 solid radioactive waste containers located north of Building 772-1F, compressed gas cylinder sheds, and a bulk liquid argon tank. Building 772-4F has no external storage facilities. No holding ponds are associated with these buildings.
- Medical support is available to all F/H Lab personnel by way of the sitewide medical facilities for industrial accidents, including abnormal events involving radiological and hazardous materials.

Building 772-F is a two-level structure with the lower level located below grade. Building 772-F provides analytical capability for liquids and powders. Building 772-1F is a two-level structure located above ground providing analytical capability primarily for liquids. Building 772-4F is a one-level structure located above ground that houses Main Exhaust components supporting Building 772-F. Buildings 772-F and 772-1F contain the following process systems and confinement systems used to accomplish their primary mission:

- Sample process systems (i.e., receipt, handling, laboratory analysis, and return of samples)
- Off gas exhaust system
- High- and low-activity drain systems
- Building and process ventilation systems
- Containment units (i.e., shielded cells, gloveboxes, radiohoods, and radiobenches)

E.3 FACILITY HAZARD CLASSIFICATION

The F/H Lab was segmented in accordance with the requirements of DOE Standard (STD) 1027-92 (Ref. 1) based on independence of hazards. As a result, each building was evaluated as an independent segment.

A comparison of the building radionuclide inventories to the threshold quantities set forth in DOE-STD-1027-92 yielded the following facility hazard categorization (Ref. 1):

- Building 772-F — Hazard Category 2 (Ref. 2)
- Building 772-1F — Hazard Category 3 (Ref. 3)
- Building 772-4F — Radiological Facility (Ref. 2)
- B-25 Waste Container Staging Areas — Hazard Category 3 (Ref. 11, 4)

A comparison of the chemical inventories in the F/H Lab to the equivalent Emergency Response Planning Guideline 3 values demonstrated that Buildings 772-F, 772-1F, 772-4F, and the B-25 Waste Container Staging Areas are all classified as General Use facilities in accordance with Savannah River Nuclear Solutions (SRNS), WSRC-MS-92-206 (Ref. 5) and the National Institute for Occupational Safety and Health Guide to Chemical Hazards (Ref. 6).

E.4 SAFETY ANALYSIS OVERVIEW

The primary functions conducted in the F/H Lab involve radiological and chemical analytical operations. These operations include sample preparation for instrument analysis or titration, reagent preparation, and standard preparation/characterization. These operations typically involve the following:

- Sample aliquoting and dilution
- Sample valence adjustment with oxidizing/reducing agents
- Matrix adjustment with acid/bases
- Pre-treatment/purification using organic extraction or anion exchange purification

These operations involve the handling of nuclear materials and chemicals in limited bench-scale (milliliter) quantities. Hazards at the F/H Lab are consistent with the hazards of a laboratory handling chemicals and nuclear materials including fissile materials.

Hazardous energy sources and hazardous material sources and their locations at the F/H Lab are listed in Appendix 3A of Chapter 3. Seven categories of events are identified that result from the facility hazards. The event categories that are used in the event characterization table in Chapter 3 are as follows:

- Fire
- Explosion/Over-Pressurization
- Loss of Containment/Confinement
- Direct Exposure (Radiological/Chemical)
- Nuclear Criticality
- External Hazards

- Natural Phenomena

Tables E-1 and E-2 of this executive summary identify the hazards associated with F/H Lab operations and summarize the main prevention and mitigation features relied upon in the facility safety analysis basis.

The most significant hazard to the offsite receptor is a full facility fire involving the entire radionuclide inventory of a building. The main features used for the prevention and mitigation of a full facility fire include the controls on the radionuclide inventory in each facility. Section E.6 provides a summary of the safety analysis of the F/H Lab.

E.5 ORGANIZATIONS

Building 772-F was originally designed and constructed by E.I. du Pont de Nemours and Company in accordance with Du Pont and site-specific structural specifications and the 1946 Uniform Building Code. Building 772-1F was designed and constructed by E.I. du Pont de Nemours and Company in accordance with Du Pont and site-specific structural specifications. Building 772-4F was constructed by WSRC in accordance with DOE Order 6430.1A (Ref. 7).

The prime contractor currently responsible for continued facility operation is SRNS. Facility maintenance and operations activities are primarily performed by SRNS personnel with support from various onsite and offsite subcontractors. The Analytical Laboratories Department of SRNS operates the F/H Lab. Chapter 17 of this SAR describes the organizational structure responsible for the F/H Lab.

E.6 SAFETY ANALYSIS CONCLUSIONS

This SAR shows that the F/H Lab can be operated without undue risk to the general public or to operating personnel. Chapter 3 contains the safety analysis of the F/H Lab. Tables 3.4-1 and 3.4-2 of Chapter 3 summarize the frequencies and consequences associated with the design basis accidents (i.e., the major hazards of operating Buildings 772-F, 772-4F, 772-1F, and the B-25 Waste Container Staging Areas). Table 3.4-2 of Chapter 3, Consequence Summary information for Design Basis Accidents, Part A, lists Bounding Design Basis Accidents that are relevant to Unreviewed Safety Question screenings and evaluations. No credible externally induced events are modeled in the accident analysis because they all are bound by the facility fire.

The largest offsite consequence due to an operational-related accident at Building 772-F results from a glovebox fire involving the entire radionuclide inventory of the building. As discussed in Chapter 3, the nominal frequency of occurrence and associated maximum offsite consequence of facility fires are in the Anticipated frequency range (less than 1E-2 per year) and 2.0E-01 rem, respectively. The largest offsite consequence due to a natural phenomena accident at Building 772-F results from an earthquake-induced full facility fire. The frequency of occurrence and associated maximum offsite consequence of this event are 2.00E-04/yr and 2.0E-01 rem, respectively. The frequencies and consequences associated with these accidents and all the other accidents analyzed in Chapter 3 are within the bounds of the evaluation guidelines provided in

Manual E7. The evaluation guidelines are 25 rem for the offsite receptor and 100 rem for the onsite receptor.

The largest offsite consequence due to operational-related accident at Building 772-1F results from a glovebox fire involving the entire radionuclide inventory of the building. As discussed in Chapter 3, the nominal frequency of occurrence and associated maximum offsite consequence of a glovebox fire are Anticipated frequency range and 6.0E-02 rem, respectively. The largest offsite consequence due to a natural phenomena accident at Building 772-1F results from a tornado. The frequency of occurrence is 8.00E-05/yr and associated maximum offsite consequence of this event is 0.96 rem, respectively. The frequencies and consequences associated with these accidents and all the other accidents analyzed in Chapter 3 are within the bounds of the evaluation guidelines provided in Manual E7.

The largest offsite consequence due to an operational-related accident at the B-25 Waste Container Staging Area results from a vehicle impact fire involving the entire radionuclide inventory of the staging area. As discussed in Chapter 3 the frequency of occurrence and the associated maximum offsite consequence of this impact fire event are Anticipated frequency range and 1.39E-02 rem, respectively. The frequencies and consequences associated with this accident and all the other accidents analyzed in Chapter 3 are within the bounds of the evaluation guidelines provided in Manual E7.

The largest offsite consequence due to an operational-related accident at Building 772-4F results from a full facility fire involving the entire radionuclide inventory of the building. As discussed in Chapter 3, the nominal frequency of occurrence and associated maximum offsite consequence of a full facility fire in Building 772-4F are Anticipated frequency range and 1.12E-06 rem, respectively. The frequencies and consequences associated with this accident and all the other accidents analyzed in Chapter 3 are within the bounds of the evaluation guidelines provided in Manual E7.

This SAR and companion Technical Safety Requirement (TSR) serve as the Safety Basis document for the F/H Lab. Included in this SAR is the derivation of the TSR, Chapter 5, which provides the methodology and logic for the development of the TSR document. Only Limiting Conditions of Operations and Administrative Controls were identified as being required in the TSR. Specific Administrative Controls, as required by DOE-STD-1186, were also identified. These were for the Radiological Inventory limits (facility and Volatile Organic Compound), container configuration inventory limits, and the Hydrogen control. Derivation of the Specific Administrative Controls is included in Chapter 4.

E.7 SAFETY ANALYSIS REPORT ORGANIZATION

This SAR was prepared in accordance with the guidelines, structure, and content provided in DOE-STD-3009-94 (Ref. 10).

E.8 REFERENCES

1. Hazard Categorization and Accident Analysis Techniques for Compliance with DOE Order 5480.23, Nuclear Safety Analysis Reports. DOE-STD-1027-92, U.S. Department of Energy, Washington, DC, September 1997.

2. Buildings 772-F and 772-4F of the Central Laboratory Facility. WSRC-TR-94-0114, Hazards Assessment Document DOE-STD-1027-92 Review, Westinghouse Savannah River Company, Aiken, SC, June 1994.

3. Central Laboratory Facility Building 772-1F. WSRC-TR-94-0115, Hazards Assessment Document DOE-STD-1027-92 Review, Westinghouse Savannah River Company, Aiken, SC, June 1994.

4. Central Laboratory Facility B-25 Waste Container Staging Areas. S-HAD-F-0004, Rev. 0, Westinghouse Savannah River Company, Aiken, SC, November 1995.

5. Craig, D.K., et al. Toxic Chemical Hazard Classification and Risk Acceptance Guidelines for Use in DOE Facilities. WSRC-MS-92-206, Rev. 2, Westinghouse Savannah River Company, Aiken, SC, March 1995.

6. NIOSH Pocket Guide to Chemical Hazards. U.S. Department of Health and Human Services, June 1994.

7. General Design Criteria. DOE Order 6430.1A, U.S. Department of Energy, Washington, DC, April 1989.

8. Deleted

9. Conduct of Engineering and Technical Support. Manual E7, Procedure 2.25, “Functional Classifications,” Savannah River Nuclear Solutions, Aiken, SC.

10. Preparation Guide for U.S. Department of Energy Nonreactor Nuclear Facility Safety Analysis Reports. DOE-STD-3009-94, CN3, U.S. Department of Energy, Washington, DC, March 2006.

11. Beck, R.S. B-25 Accident Analysis Material at Risk, S-CLC-F-00603, Rev. 1, Washington Safety Management Solutions, Aiken, SC, July 2007.

E.9 TABLES

Table E-1 F/H Lab Hazardous Energy Source Groups, Events, and Prevention/Mitigation Features

Hazardous Energy Source Groups	Hazard Categories	Event Categories	Prevention and Mitigation Features
Radiation (ionizing)	Radioactive material release	Loss of containment and/or loss of confinement	Gloveboxes, radionuclide sample containers, shielding and shielded cells, main exhaust systems (Buildings 772-F and 772-1F), offgas exhaust systems (Buildings 772-F and 772-1F), shielded cell exhaust system (Building 772-F), radiation monitoring equipment
Fissile material	Nuclear criticality	Nuclear criticality	Fissile material control program, criticality controls, training
Ionizing radiation sources	Direct radiological exposure	Injury to operators (direct radiological exposure of personnel)	Site and laboratory operating procedures, training
Electrical Thermal Friction Pyrophoric material Spontaneous combustion Open flame Flammables Combustibles	Fire (radioactive material release, contamination)	Fire Loss of containment (contamination of workers)	Radiological inventory limits, Buildings 772-F and 772-1F sprinkler systems, fire detection/suppression, fire protection plan, site and laboratory operating procedures, compliance with standard codes and engineering controls, and site safety program
Potential (pressure) Explosive gases	Explosion (radioactive material release, contamination)	Explosion Loss of containment (contamination of workers)	Radiological inventory limits, propane controls, site and laboratory operating procedures, fire protection sprinklers and detection
Electrical Gravitational Potential (pressure) Kinetic Thermal Cryogenic (liquid gases)	Industrial hazards	Injury to personnel (industrial accidents)	Site and laboratory operating procedures, training, site safety program

Table E-1 F/H Lab Hazardous Energy Source Groups, Events, and Prevention/Mitigation Features (Continued)

Hazardous Energy Source Groups	Hazard Categories	Event Categories	Prevention and Mitigation Features
Acoustical Non-ionizing radiation Uncontrolled chemical reactions	Industrial hygiene hazards	Injury to personnel (industrial hygiene accidents)	Site and laboratory operating procedures, chemical control program, industrial hygiene program, noise control (personnel protection) program, protective clothing and equipment, and safety showers
Straight wind Tornado Earthquake Flood Lightning	Natural phenomena (radioactive material release, contamination)	Natural phenomena Straight wind Tornado Earthquake Flood Lightning Loss of containment (contamination of workers)	Radiological inventory limits, building structures, main exhaust system, SRS emergency preparedness plan
Gravitational (aircraft) Kinetic Thermal Potential	External hazards	External events	Building structures, radiological inventory limits

Table E-2 F/H Lab Hazardous Material Source Groups, Events, and Prevention/Mitigation Features

Hazardous Material Source Groups	Hazard Categories	Event Categories	Prevention and Mitigation Features
Asphyxiants Toxics Corrosives Carcinogens Oxidizers	Industrial hygiene hazards	Injury to personnel (industrial hygiene accidents)	Site and laboratory operating procedures, chemical control program, training, protective clothing/equipment, safety showers, and site safety program
Asphyxiants Toxics Corrosives Carcinogens Oxidizers	Hazardous material release	Loss of containment (loss of confinement)	Site and laboratory operating procedures, chemical control program, training, respiratory equipment, and site safety program

WSRC-SA-96-26
REV. 8

CENTRAL LABORATORY FACILITY - BUILDINGS 772-F, 772-1F, AND 772-4F SAFETY ANALYSIS REPORT

CHAPTER 1

SITE CHARACTERISTICS

May 2010

Savannah River
Nuclear Solutions, LLC
A Fluor Daniel Partnership

DISCLAIMER

This document was prepared by Savannah River Nuclear Solutions LLC (SRNS), under contract with the United States Department of Energy (DOE).

Release to and Use by Third Parties. As it pertains to releases of this document to third parties, and the use of or reference to this document by such third parties in whole or in part, neither SRNS, DOE, nor their respective officers, directors, employees, agents, consultants or personal services contractors (i) make any warranty, expressed or implied, (ii) assume any legal liability or responsibility for the accuracy, completeness, or usefulness, of any information, apparatus, product or process disclosed herein or (iii) represent that use of the same will not infringe privately owned rights. Reference herein to any specific commercial product, process, or service by trademark, name, manufacture or otherwise, does not necessarily constitute or imply endorsement, recommendation, or favoring of the same by SRNS, DOE or their respective officers, directors, employees, agents, consultants or personal services contractors. The views and opinions of the authors expressed herein do not necessarily state or reflect those of the United States Government or any agency thereof.

CONTENTS

Page

1.0 SITE CHARACTERISTICS 1.1-1

1.1 INTRODUCTION 1.1-1

1.1.1 Objective 1.1-1

1.1.2 Scope 1.1-1

1.2 REQUIREMENTS 1.2-1

1.3 SITE DESCRIPTION 1.3-1

1.3.1 Geography 1.3-1

1.3.1.1 Location 1.3-1

1.3.1.2 Exclusion Area 1.3-1

1.3.2 Demography 1.3-3

1.3.3 Uses of Nearby Land and Waters 1.3-4

1.3.3.1 Land Use 1.3-4

1.3.3.2 Water Use 1.3-4

1.4 ENVIRONMENTAL DESCRIPTION 1.4-1

1.4.1 Meteorology 1.4-1

1.4.1.1 Regional Climatology 1.4-1

1.4.1.2 Local Meteorology 1.4-1

1.4.1.3 Onsite Meteorological Measurement Program 1.4-1

1.4.1.4 Short-Term (Accident) Diffusion Estimates 1.4-1

1.4.1.5 Long-Term (Routine) Diffusion Estimates 1.4-1

CONTENTS (Continued)

Page

1.4.2 Hydrology 1.4-1

1.4.2.1 Surface Hydrology 1.4-1

1.4.2.2 Subsurface Hydrology 1.4-2

1.4.3 Geology and Seismology 1.4-3

1.4.3.1 Properties of Underlying Materials 1.4-4

1.4.3.2 Excavation and Backfill 1.4-6

1.4.3.3 Liquefaction 1.4-6

1.4.3.4 Dynamic Settlement 1.4-7

1.4.3.5 Soft Zones and Carbonate Sediments 1.4-7

1.4.3.6 Slope Stability 1.4-7

1.5 NATURAL PHENOMENA THREATS 1.5-1

1.5.1 Floods 1.5-1

1.5.2 Earthquakes 1.5-1

1.5.3 Tornadoes 1.5-2

1.5.4 Extreme Winds 1.5-2

1.6 EXTERNAL MAN-MADE THREATS 1.6-1

1.6.1 Transportation 1.6-1

1.6.2 Missiles and Blast Effects 1.6-1

1.7 NEARBY FACILITIES 1.7-1

1.8 VALIDITY OF EXISTING ENVIRONMENTAL ANALYSES 1.8-1

1.9 REFERENCES 1.9-1

CONTENTS (Continued)

Page

1.10 TABLES 1.10-1

1.11 FIGURES 1.11-1

TABLES

Page

1.3-1 Approximate Distance to the F/H Lab from Other SRS Areas..... 1.10-1

FIGURES

Page

1.3-1 Savannah River Site 1.11-1

1.3-2 Map of F Area 1.11-2

1.3-3 Relative Locations of Buildings 772-F, 772-1F, and 772-4F 1.11-3

1.4-1 Area Location Plan 1.11-4

1.4-2 Shear Wave Velocity Versus Depth 1.11-5

1.4-3 G/G max Versus Shear Strain 1.11-6

1.4-4 Percent Damping Ratio Versus Shear Strain 1.11-7

ACRONYMS AND ABBREVIATIONS

bpf	blows per foot
DOE	Department of Energy
DSA	Documented Safety Analysis
ERDMS	Environmental Restoration Data Management System
F/H Lab	F/H Area Laboratory
g	acceleration due to gravity
HEPA	High-Efficiency Particulate Air
MOX	Mixed Oxide
msl	mean sea level
NPH	Natural Phenomena Hazard
pcf	pounds per cubic foot
PGA	Peak Ground Acceleration
pH	a measure of acidity
SAR	Safety Analysis Report
SCE&G	South Carolina Electric & Gas
SPT	Standard Penetration Test
SREL	Savannah River Ecology Laboratory
SRFS	Savannah River Forestry Service
SRNS	Savannah River Nuclear Solutions
SRS	Savannah River Site
tsf	tons per square foot
UTRC	Upper Three Runs Creek
WSI	Wackenhut Services, Incorporated
WSRC	Washington Savannah River Company

1.0 SITE CHARACTERISTICS

1.1 INTRODUCTION

1.1.1 OBJECTIVE

The purpose of this chapter is to provide information that will satisfy the requirements of Title 10 Code of Federal Regulations, Part 830, Subpart B for a Documented Safety Analysis (DSA) (Ref. 1).

1.1.2 SCOPE

This chapter describes the site characteristics of the F/H Area Laboratory (F/H Lab) (Buildings 772-F, 772-1F, and 772-4F) that are necessary to understand the facility environs important to the safety basis. Information is provided to support and clarify assumptions used in the hazard and accident analyses to identify and analyze potential external accident initiators and accident consequences external to the facility. Products of this chapter include the following (Ref. 2):

- Description of the location of the site, location of the F/H Lab within the site, and the proximity of the F/H Lab to the public and to other facilities
- Determination of the historical basis for site characteristics in meteorology, hydrology, geology, seismology, and other natural phenomena to the extent needed for hazard and accident analyses
- Identification of design basis natural phenomena
- Identification of sources of external accidents, such as nearby airports and railroads
- Identification of nearby facilities impacting or impacted by the F/H Lab

When required information is provided in another chapter of this Safety Analysis Report (SAR) or in Chapter 1 of the Savannah River Site (SRS) Documented Safety Analysis (DSA) Support Document – Site Characteristics and Program Descriptions (Ref. 3), that chapter is referenced to limit repetition. In those cases where policies, programs, and practices important to safe operation are described in detail in other documents, the salient features are summarized in this chapter and the documents are referenced (Ref. 2).

1.2 REQUIREMENTS

Chapter 1 of the SRS DSA Support Document (Ref. 3) lists the Savannah River Nuclear Solutions (SRNS) documents that specify codes, standards, regulations, and Department of Energy (DOE) Orders, as well as other site documents that govern program elements addressed in this chapter.

1.3 SITE DESCRIPTION

1.3.1 GEOGRAPHY

1.3.1.1 Location

The F/H Lab, which is composed of the Production Control Facilities (Building 772-F), New Production Control Facilities (Building 772-1F), and Airborne Radiation Removal Facility (Building 772-4F), is located in Aiken County, South Carolina, at the Savannah River Site (SRS). SRS is an approximately circular tract of land occupying 310 square miles (198,344 acres) within Aiken, Barnwell, and Allendale Counties in southwestern South Carolina (Ref. 33). All of the area within a 5-mile (8-km) radius from the center of SRS is government-owned property. The center of SRS is approximately 25 miles (40 km) southeast of the city limits of Augusta, GA; 100 miles (160 km) from the Atlantic Coast; and about 110 miles (180 km) south-southeast of the North Carolina border. The SRS is bounded along 17 miles (27 km) of its southwest border by the Savannah River (see Figure 1.3-1). The SRS DSA Support Document (Ref. 3) contains additional details describing SRS.

F Area is located near the center of SRS, east of Road C and north of Road E, with the F-Area center point at SRS coordinates E51,345; N77,687 and Universal Transverse Mercator coordinates E437,000; N3,583,500. The principal unit in the 200-F Area is a chemical separations facility, identified as F-Area. The F/H Lab is located immediately west (approximately 100 feet) of F-Canyon. Figure 1.3-2 shows the location of the F/H Lab in F-Area. Chapter 2 of this SAR provides additional details about the facility layout and arrangement.

The nearest site boundary to F Area is approximately 5 miles to the west. F-Area surface elevations range from approximately 200 to 320 feet above mean sea level (msl). Upper Three Runs Creek (UTRC) and Four Mile Creek lie to the north and south, respectively, of F Area. Surface drainage from F Area is through tributaries of these two streams. Section 1.3.1.2 of the SRS DSA Support Document discusses vegetative cover and soil characteristics and their impacts on erosion and fire hazards.

Approximate distances to other locations of interest are provided in the SRS DSA Support Document (Ref. 3) and in the Natural Phenomena Hazards document for the Mixed Oxide Fuel Fabrication Facility (MOX) (Ref. 33).

1.3.1.2 Exclusion Area

F-AREA

F Area is drained by several tributaries of Upper Three Runs Creek approximately 2,200 feet to the north and west and by Fourmile Branch approximately 2,000 feet to the south. Topography

in the vicinity is shown in Figure 1.3-15 (Ref. 3). Surface elevations across F Area range from approximately 200 to 320 feet msl.

F Area's main processing facility is F Canyon, which is composed of two chemical separations plants and associated waste storage facilities. In the past, the F Canyon was used to chemically separate uranium, plutonium, and fission products from irradiated fuel and target assemblies. The separated uranium and plutonium were transferred to other facilities for further processing and final use. The waste was transferred to high-level waste tanks in the area for storage. The F Area waste tank farm consists of 22 underground storage tanks that store high-level aqueous radioactive waste and evaporated saltcake.

Currently, F-Canyon and FB-Line are not operating.

SITE BOUNDARY

Activities conducted within SRS that are not under the control of the operating contractor, SRNS, and not related to production or activities within the F Area labs, are performed by organizations such as : General Services Administration (GSA), Wackenhut Services, Incorporated (WSI), Savannah River Forestry Service (SRFS), Savannah River Ecology Laboratory (SREL), University of South Carolina Institute of Archaeology and Anthropology, SCS, and South Carolina Electric & Gas (SCE&G). Descriptions of these organizations and activities are found in the SRS DSA Support Document (Ref. 3).

FACILITY AREA BOUNDARY

Figure 1.3-2 shows the F-Area facility area boundary. Figure 1.3-3 shows the relative location of the three F/H Lab buildings.

BOUNDARIES FOR APPLYING EVALUATION GUIDELINES

The assessment location for estimation of radiological doses to the public due to F/H Lab accidental releases of radioactive materials is the outer perimeter boundary line of SRS. Specific evaluation guidelines (Ref. 5) were developed for the maximally exposed offsite individual located at the closest point on the SRS boundary. Evaluation guidelines are provided in Manuals 11Q and E7 (Ref. 4, 5) for the worker at SRS. These evaluation guidelines have been applied to a worker located at distances of 100 meters from the release point of radioactive materials. Table 1.3-1 provides the approximate distance to the F/H Lab from other SRS areas.

ACCESS CONTROL

The public has only restricted and generally escorted access to SRS, with the exception of controlled deer hunts conducted on prescribed areas of the SRS. The outer perimeter of SRS is fenced; access is controlled by the operating contractor with the assistance of the security

contractor, WSI. General access to the plant site, with the exception of public transportation corridors, is limited to badged personnel.

SCR125 is a public access corridor and is not controlled. The CSX rail line maintains a right-of-way through the site, without barricades at either end of the site. Although these entries do not restrict pedestrian access, access would be into a nonsecured area of SRS with further entry into secured areas restricted by barricades.

Visitors to SRS must wear identification badges, and those entering areas where there is a radiation hazard are required to wear dosimeters. The roads that pass through or near the perimeter can be blocked by WSI personnel or with the assistance of local, law enforcement personnel.

F Area is a Property Protection Area in which unescorted access within F Area requires a site badge

EFFLUENT RELEASE POINTS

H-Canyon processes high-activity liquid effluents generated in 772-F and 772-1F and then discharges these effluents to the H-Area tank farm. Low-activity liquid effluents generated in Buildings 772-F and 772-1F are pumped to the Effluent Treatment Facility in H-Area.

The 190-foot stack at Building 772-4F discharges exhaust air from Building 772-F that has been filtered by the High-Efficiency Particulate Air (HEPA) filters in Building 772-4F. The offgas exhaust system in Building 772-F discharges exhaust air that has been HEPA-filtered to 772-4F. The 135-foot stack at Building 772-1F discharges exhaust air from Building 772-1F that has been HEPA-filtered in 772-1F

The SRS Solid Waste Management Facility receives the solid waste. Chapter 9 of this SAR contains additional details on F/H Lab radioactive and hazardous waste management.

RELEVANT SPECIAL FEATURES

Section 1.3.1.2 of the SRS DSA Support Document (Ref. 3) discusses the special features relevant to SRS and the F/H Lab.

1.3.2 DEMOGRAPHY

Section 1.3.2 of the SRS DSA Support Document (Ref. 3) provides information on the population within 50 miles of the F/H Lab, describing both permanent and transient populations.

1.3.3 USES OF NEARBY LAND AND WATERS

1.3.3.1 Land Use

The F/H Lab occupies approximately 2.5 of the 364 acres in F Area. Land within a 5-mile radius of the F/H Lab lies completely within SRS. Section 1.3.3.1 of the SRS DSA Support Document (Ref. 3) discusses land use at SRS.

1.3.3.2 Water Use

The F/H Lab does not use the Savannah River for its water supply. The F/H Lab obtains its water supply from wells located in A and C Areas. Chapter 2 of this SAR describes the F/H Lab water supply systems.

Section 1.3.3.2 of the SRS DSA Support Document (Ref. 3) discusses the general uses of the Savannah River water outside SRS boundaries. Section 1.4.2 of the SRS DSA Support Document discusses the uses of surface and subsurface waters within SRS.

1.4 ENVIRONMENTAL DESCRIPTION

1.4.1 METEOROLOGY

1.4.1.1 Regional Climatology

Section 1.4.1.1 of the SRS DSA Support Document (Ref. 3) discusses the climate of the southeastern United States, including SRS.

1.4.1.2 Local Meteorology

Section 1.4.1.2 of the SRS DSA Support Document (Ref. 3) discusses the local meteorology (temperature, humidity, precipitation, fog, etc.) of SRS.

1.4.1.3 Onsite Meteorological Measurement Program

Section 1.4.1.3 of the SRS DSA Support Document (Ref. 3) discusses the collection of meteorological data used in the monitoring program at SRS.

1.4.1.4 Short-Term (Accident) Diffusion Estimates

Chapter 3 of this SAR discusses the calculations used in assessing the consequences of unplanned atmospheric releases.

1.4.1.5 Long-Term (Routine) Diffusion Estimates

Dosimetric assessments for routine releases are performed with the MAXIGASP and POPGASP computer codes. These codes are adaptations of the XOQDOQ code developed by the Nuclear Regulatory Commission (Ref. 6), which calculates relative diffusion according to algorithms found in Regulatory Guide 1.111 (Ref. 7). Chapter 3 of this SAR discusses the methodology for these calculations.

1.4.2 HYDROLOGY

1.4.2.1 Surface Hydrology

Section 1.4.2 of the SRS DSA Support Document (Ref. 3) provides a detailed hydrologic description of the Savannah River and its tributaries and describes the locations, sizes, shapes, and other hydrological characteristics of streams, rivers, lakes, shore regions, and groundwater environments that influence the general site.

1.4.2.2 Subsurface Hydrology

All water level data and geochemical data from F Area monitoring wells and process wells are contained in the Environmental Restoration Data Management System (ERDMS). This database also contains well construction and abandonment information. A discussion of subsurface hydrogeological conditions is found in Sections 1.4.2.1 and 1.4.2.2 of the SRS DSA Support Document (Ref. 3).

WELL USAGE

F Area facilities draw domestic and process water from a centralized A Area/C Area water system. F Area previously drew water from production wells. The past operation of these production water wells has not caused subsidence of the F-Canyon foundation or influenced potential contaminant flow paths in the post-Cretaceous aquifers (i.e., aquifers occurring in sedimentary layers formed after the Cretaceous period) (Ref. 3).

WATER GRADIENTS

Section 1.4 of the SRS DSA Support Document (Ref. 3) presents a contour map (see Figure 1.4-20 of the SRS DSA Support Document) of the water table in F Area based on data collected in 1988. More recent data have indicated nominal fluctuations in the water table. No significant or persistent changes have occurred. An expanded explanation of the F-Area aquifer and confining systems can be found in Section 1.4.2.2 of the MOX Natural Phenomena Hazard (NPH) Design Criteria document (Ref. 33). Data collected in 1988 form the bases for the following discussion.

At F Canyon, the water table occurs at an elevation of about 225 feet, slopes north-northwest, and, with respect to plant north, has a horizontal gradient of about 85 feet per mile. To the south-southwest, the horizontal gradient is approximately 76 feet per mile. It is evident from the contour map that groundwater flow at the water table is away from F-Area facilities. It is also apparent that the location of F Area is at or near a groundwater flow divide. Groundwater flowing north discharges into UTRC; groundwater flowing south discharges into Four Mile Creek. Should contaminants leak to the water table, it is likely that they will discharge to surface drainage.

Horizontal hydraulic gradients vary depending on the water-bearing zone examined. Within the Upper Three Runs Aquifer, the horizontal hydraulic gradient in the Lower Aquifer Zone (Aquifer Zone IIB 1) is only slightly less than the water table because the water table occurs within the Lower Aquifer Zone along the valley walls of UTRC.

The horizontal gradient from a point in the Gordon Aquifer directly below F Area to UTRC is approximately 23 feet per mile. This value can be deduced from the hydraulic head contour map of the Gordon Aquifer (Figure 1.4-54 of the SRS DSA Support Document) (Ref. 3).

The water-bearing sands of the Gordon Aquifer are used to estimate vertical gradients beneath F Area. The upper limit of the Gordon Aquifer is at 135 feet above msl, and the hydraulic head is about 145 feet above msl. Thus, from the water table to the Gordon Aquifer there is a vertical

gradient (change in head to change in vertical length or distance) that can be calculated as follows: (225-145)/(225-135) = 80/90 = 0.9 feet per foot.

Water from the Gordon Aquifer and from deeper, higher-pressure zones discharges into the valley of UTRC.

PERMEABILITY, POROSITY, AND FLOW RATES

Section 1.4.2 of the SRS DSA Support Document (Ref. 3) summarizes the porosities and permeabilities estimated from sieve analyses of clean, unconsolidated sands from cored wells near the F-Canyon facility of F Area. The method of Beard and Weyl (Ref. 11) was used to estimate porosity and permeability values. Sands from shallow zones (Gordon Aquifer and above) average about 35% porosity and have hydraulic conductivities between 200 and 3,000 gallons per day per square foot (25 to 400 feet per day).

Using these values for horizontal conductivity and a horizontal gradient of 0.015 (Ref. 3), flow velocities of 1 to 10 feet per day are calculated. The gradient of 0.015 is the horizontal gradient in the F Area for hydraulic heads in the Lower Aquifer Zone of the Upper Three Runs Aquifer.

Section 1.4.2 of the SRS DSA Support Document summarizes hydraulic conductivity data derived from slug tests of HSB- and BGO-series wells.

WATER CHEMISTRY

Section 1.4.2 of the SRS DSA Support Document (Ref. 3) describes a monitoring well network consisting of over 100 wells installed to monitor groundwater quality in F Area. All geochemical data from F Area monitoring wells and process wells are contained in the Environmental Restoration Data Management System (ERDMS). This database also contains well construction and abandonment information.

POTENTIAL GROUNDWATER RECHARGE AREAS

As shown in Section 1.4.2.2 of the SRS DSA Support Document (Ref. 3), the potential local groundwater recharge zone closest to F Area is the upland area with downward vertical gradients just to the southeast of F Area. Recharge areas for the Cretaceous aquifers are located outside of the SRS boundary.

Construction of F-Area facilities has had no effect on groundwater recharge areas; conversely, groundwater has had no effect on construction activities.

1.4.3 GEOLOGY AND SEISMOLOGY

Sections 1.4.3 and 1.4.4 of the SRS DSA Support Document (Ref. 3) discuss in detail the background geology and seismology of the SRS. No project-specific geotechnical exploration was performed for Building 772-F. Information on shallow soils was extracted from reports

(Ref. 12, 13) for the adjacent facility (Building 772-4F) and from the F-Area Geotechnical Report (Ref. 34). Information on deeper soils and dynamic soil data was extracted from reports developed for the Naval Fuels Facility (Ref. 14), the Sand Filter Facility (Ref. 15, 16), which are located approximately 500 feet northeast and approximately 700 feet southeast, respectively and from recent geotechnical work completed for the MOX Facility (Ref. 33) located approximately 900 feet east. Figure 1.4-1 (of this Chapter) shows the relative location of these facilities with the MOX facility just off the eastern boundary of the figure. There are minimal geotechnical soils data available to the west of the facility but environmental borings suggest similar soil conditions westward of the facility. To the north of the facility are numerous geotechnical borings, seismic and piezocone tests from the geotechnical siting activities for the Modern Pit Facility and Pit Disassembly and Conversion Facility.

The deep geologic section underlying F-Area is discussed in the SRS DSA Support Document (Ref. 3). There are no known tectonic faults within F-Area. A detailed faulting and subsurface geologic structure sections is found in the SRS DSA Support Document (Ref. 3).

1.4.3.1 Properties of Underlying Materials

The F-Area Geotechnical Report (Ref. 34) defines a typical engineering layering or stratification for the Separations Area of F Area. The upper layer consists of the Tobacco Road Formation (TR1 layer) and is typically 25 feet thick, ± 10 feet consisting of clayey sands and sandy clays. The underlying layer, the Tobacco Road 1A (TR 1A) layer is approximately 20 feet thick ± 5 feet and also consists of intercalated clayey sands and clays. The next several engineering strata, the Tobacco Road 2A, Tobacco Rod 2B, Tobacco Road 3/4 are found to a depth averaging approximately 100 feet (approximately 200 feet msl). The Dry Branch, Santee Green Clay, and Congaree engineering strata are found below the Tobacco Road and to a depth of approximately 200 feet. The F-Area Geotechnical Report (Ref 34) defines engineering parameters for each of these engineering layers.

Materials from local borings adjacent to Building 772-F typically had 20% to 35% by weight passing the No. 200 sieve and would classify as “SC” (clay sand) or “SM” (silty sand) according to the Unified Classification System (Ref. 17). Fines were predominately clayey with a plastic index ranging from 7 to 31 and averaging 19, based on seven tests (Ref. 18, 13). The ground surface elevation is approximately 310 feet above msl.

Loose fill (Standard Penetration Test [SPT] [Ref. 19] N-value ranging from 3 to 9 blows per foot [bpf]) was encountered immediately to the east of the facility in four of the eight borings performed for Building 772-4F (Ref. 12, 13). The loose fill was encountered to a maximum depth of 13 feet at the boring locations. The extent of this loose material under F/H Lab is currently indeterminate.

Calcareous soils with various degrees of cementation were encountered at the Sand Filter Facility, approximately 700 feet east of Building 772-F, at a depth of approximately 140 feet. Soft zones, as defined in Section 1.4.3.5, are encountered within F Area (Ref 34). The borings near Building 772-4F did not extend to a sufficient depth to have encountered the formations where these soft zones are typically found (Ref. 13).

Depth to groundwater measured just east of the facility at the time of drilling was approximately 90 feet or approximately at an elevation 225 feet above msl. Groundwater is encountered at similar elevations throughout F-Area.

STATIC PROPERTIES

Static properties for all soil layers averaged for F-Area are given in Table 3.1.1 of the F-Area Geotechnical Report (Ref. 34). Twenty-eight parameters are defined in this table for 10 subsurface layers. Corrected tip resistance ranges from 55 tsf to 201 tsf. Dry densities range from 76 pcf to 106 pcf, and wet densities from 108 pcf to 124 pcf. Effective friction angle ranges from 26 to 34 degrees. The static Shear Modulus G varies from 102 to 226 tsf.

DYNAMIC PROPERTIES

Dynamic soil properties for F-Area are given in the F-Area Geotechnical Report (Ref 34). Tables 3.1-1, 3.2-1, 3.2-2, and 4.2-1 provide averaged dynamic property values for soils within F-Area and underlying the laboratory facilities. Values are given for 10 subsurface engineering layers. Shear wave velocities range from 978 to 1675 feet/sec. Damping ratios for varying strain rates are given in Table 3.2-2 of the F-Area Geotechnical Report (Ref. 34) by subsurface formation.

A dynamic soil property evaluation was performed for the Sand Filter Facility, located approximately 700 feet to the southeast of Building 772-F (Ref. 15, 16). The evaluation consisted of an in-situ determination of the soil shear wave velocity and a laboratory determination of the strain dependent dynamic soil properties. For the shear wave velocity determination, a three-hole array (holes A, B, and C) cross-hole shear wave study was performed to a depth of approximately 110 feet. Figure 1.4-1 shows the location of the Sand Filter Facility relative to Building 772-F. Figure 1.4-2 shows the shear wave velocity data plotted against depth. Each hole is designated by the letter A, B, or C. The data represent the shear wave velocity from A to B, B to C, A to C, and the average of the three shear wave velocity determinations. These data are used to determine the maximum value of shear modulus (G_{max}) for use in dynamic analysis and are referenced in the F-Area Geotechnical Report (Ref. 34).

Laboratory testing consisted of three resonant column and two strain controlled cyclic triaxial tests. The recommended normalized shear modulus reduction and damping ratio curves versus shear strain were developed and are shown in Figures 1.4-3 and 1.4-4, respectively. Assuming that the subsurface conditions for Building 772-F are similar to those found at the Sand Filter Facility, then these curves would also be appropriate for Building 772-F. These curves generally fall within the bounds established by Seed, et al. (Ref. 21) and within the parameters established in the F-Area Geotechnical Report (Ref. 34).

FOUNDATION RECOMMENDATIONS

Foundation bearing capacities for various foundation designs are discussed in the F-Area Geotechnical Report (Ref. 34). Static and dynamic bearing capacities were evaluated. Two

methods were utilized: a bearing capacity based on soil strength and a bearing capacity based on settlement. A safety factor of 3 was used for static bearing capacity and a safety factor of 2.25 was used for dynamic bearing capacities. Results indicate that the average soil bearing capacity in the F-Separations area ranges from 1.9 to 4.2 kips per square foot depending on the configurations and locations of foundations. Section 4.4 and Figures 4.4-2 through 4.4-4 of the F-Area Geotechnical Report (Ref. 34) discuss these results.

1.4.3.2 Excavation and Backfill

Excavation and backfill performed at the facility were controlled by existing SRS standards, SRS Engineering Requirement Document 02224-01-R (Ref. 22), or its predecessor documents prior to 1995. All structural fill was to be compacted to a specified minimum of 95% of the maximum density as defined by ASTM D 1557 (Ref. 23). After 1995, all backfill operations will be controlled by project-specific specifications. Section 1.4.5.2 of the SRS DSA Support Document (Ref. 3) discusses this subject further. Section 4.5 of the F-Area Geotechnical Report (Ref. 34) provides figures for foundations on backfill.

1.4.3.3 Liquefaction

The liquefaction susceptibility of the subsurface materials in F-Area was evaluated using both qualitative and quantitative approaches in the F-Area Geotechnical Report (Ref. 34). Section 1.4.5.3 of the SRS DSA Support Document (Ref. 3) and the F-Area Report (Ref. 34) discusses in detail the general methodologies employed for liquefaction assessments. The methods used in F Area included a simplified shear wave velocity approach, the criteria for clayey soils, and the traditional strength approach.

The shear wave velocity approach for sediments in F Area indicates that the maximum expected cyclical stress for a PC-3 event earthquake are less than 0.09 which is below the critical values of 0.325 for similar soils and shear wave velocities expressed in the Seed et al document (Ref. 21). Deeper shear wave velocities are expected to generate cyclical stresses of 0.24 still much less than the 0.325 critical value to liquefy. Therefore, based on this method, the liquefaction potential in F Area is expected to be non-existent.

The clayey soils approach to F-Area liquefaction is described in Section 4.2.2.1 of the F-Area Geotechnical Report (Ref. 34). Liquid and plastic limits, plasticity index, natural water content for 263 samples for F -Area indicate that the vulnerability of clayey sands to seismic liquefaction is negligible.

The strength method for evaluation of liquefaction potential is discussed in Section 4.2.2.3 of the F-Area Geotechnical Report (Ref. 34). The results of calculations based on five SCPTUs indicate that for a PC-3 seismic event, liquefaction will not occur.

1.4.3.4 Dynamic Settlement

Section 1.4.5.4 of the SRS DSA Support Document (Ref. 3) discusses the general methodologies used for estimating dynamic settlements. Dynamic settlement results for F Area are discussed in the F-Area Geotechnical Report (Ref. 34). Typically, dynamic settlements under these conditions are low to insignificant relative to liquefaction-induced settlements. As discussed previously, the likelihood of significant liquefaction occurring is considered remote.

1.4.3.5 Soft Zones and Carbonate Sediments

As described in the SRS DSA Support Document (Ref. 3), throughout the general site, the McBean member of the Santee Limestone Formation consists of varying thickness of clayey sands and noncalcareous, generally fine-grained quartz sand. The calcareous portions are rare in the northwestern part of SRS, more abundant but still sporadic in the central part, and becoming widespread and relatively thick in the southwestern part.

Siple (Ref. 26) speculates that, over the years, some of the calcareous materials have undergone solution, causing some subsidence of the overlying beds and formation of depressions. Siple mentions encounters with "voids," or loosely compacted sediments during drilling, and notes that large amounts of cement grout were used to stabilize these subsurface "soft zones" before construction of heavy structures for the original plant facility.

Borings performed for Building 772-4F did not extend deep enough to encounter the McBean Formation; therefore, no soft or suspect zones were encountered (Ref. 12, 13). No soft or suspect zones were encountered at the Naval Fuels Facility (Ref. 14). A limestone unit and a "suspect zone" (SPT N-value between 5 and 10 bpf) were encountered at the Sand Filter Facility at a depth of approximately 140 feet (Ref. 15, 16). The Canyon Building, located approximately 100 feet to the east, was grouted during the original plant construction during the 1950s (Ref. 27). There were grout "takes" in 18 borings on the north and south ends of the building Soft zones have typically been defined as an SPT N-value of 5 bpf or less. Suspect zones have an SPT N-value between 5 and 10 bpf. Soft zones have been typically encountered along the periphery of existing leached-out limestone bodies. Soft zones in F Area are described in the F-Area Geotechnical Report (Ref. 34).

The potential impacts on engineered facilities of identified and hypothesized "soft or suspect zones" have recently been studied in detail for similar subsurface conditions in other site areas (i.e., K and H Areas) (Ref. 28, 29, and 35). The SRS DSA Support Document (Ref. 3) contains an in-depth discussion of soft zones. While the approaches and individual facility circumstances have varied considerably, in general "soft or suspect zones" have not been found to pose a significant threat to engineered structures.

1.4.3.6 Slope Stability

Section 4.6 of the F-Area Geotechnical Report (Ref. 34) discusses requirements for slope stability for F Area.

1.5 NATURAL PHENOMENA THREATS

This section identifies specific natural phenomena events considered to be potential accident initiators and provides a summary of the assumptions used to support the Chapter 3 accident analysis.

1.5.1 FLOODS

The peak stage corresponding to the probable maximum flood, as stated in Section 1.5.1.3 of the SRS DSA Support Document (Ref. 3), is 224.5 feet above msl or 75 feet below the F-Area site grade; therefore, there is no safety threat to the F/H Lab from high water.

1.5.2 EARTHQUAKES

The design basis earthquake for Building 772-F is 0.18g Peak Ground Acceleration (PGA). The design basis earthquake for Building 772-4F is 0.13g PGA. Buildings 772-F and 772-4F are structurally adequate to remain standing for up to a 0.20g PGA earthquake (Ref. 30). In addition, the Building 772-4F air filtration system (e.g., HEPA filters, fans, ducts, and exhaust stack) is structurally adequate for up to a 0.20g earthquake (Ref. 30).

The accident analysis in Section 3.4 of this SAR assumes that, in the event of an earthquake with PGA less than or equal to 0.2g, Buildings 772-F and 772-4F remain standing and intact; however, the gloveboxes, radiohoods, and radiobenches inside Building 772-F are toppled over, spilling their contents within the laboratories.

A natural phenomena hazards qualification was performed for Building 772-1F and the facility exhaust stack (Ref. 30). The analysis concluded that Building 772-1F satisfies the seismic requirements for a 0.13g earthquake and that the Building 772-1F exhaust stack satisfies the seismic requirements for a 0.20g earthquake.

The accident analysis in Section 3.4 of this SAR assumes that, in the event of an earthquake with PGA less than or equal to 0.13g, Building 772-1F remains standing and intact, but no credit is taken for the passive boundary; however, the gloveboxes, radiohoods, and radiobenches inside Building 772-1F are toppled over, spilling their contents within the laboratories.

Earthquakes whose PGA exceeds the structural capabilities of the buildings are assumed to result in building collapse. These earthquakes are modeled as beyond design basis earthquakes in Section 3.4 of this SAR.

The SRS DSA Support Document (Ref. 3) contains information on anticipated earthquakes, ground motion, and predicted accelerations for the SRS.

1.5.3 TORNADOES

Building 772-F was evaluated for structural integrity and confinement and found to be adequate for up to a 137-mph fastest-mile windspeed tornado, which envelopes straight wind (Ref. 30). Because of the structural integrity of Building 772-F, no radiological releases are assumed for design basis tornadoes. Releases are assumed for beyond design basis tornadoes.

Buildings 772-1F and 772-4F are designed for extreme wind loads as discussed in Section 1.5.4, which would include a tornado of comparable severity.

Section 1.4.1.1 of the SRS DSA Support Document (Ref. 3) discusses tornadoes.

1.5.4 EXTREME WINDS

Building 772-F was evaluated for structural integrity and confinement and found to be adequate for up to a 137-mph fastest-mile windspeed tornado, which envelopes straight wind (Ref. 30).

Building 772-1F is designed as a low-hazard facility and will withstand up to a 100-mph straight wind (Ref. 30), which would include a tornado of comparable severity. Although capable of withstanding the extreme wind, radiological releases are assumed from a design basis straight wind or comparable tornado.

Building 772-4F is designed to meet low-hazard requirements. A recent analysis assessed the structural integrity of Building 772-4F and determined that Building 772-4F would withstand up to an 84-mph wind speed (Ref. 30), which would include a tornado of comparable severity. Because of the structural integrity of Building 772-4F, no radiological releases are assumed for a design basis straight wind or comparable tornado.

Releases of radioactive materials are assumed for beyond design basis straight winds or comparable tornadoes. These releases are modeled in Section 3.4 of this SAR.

Section 1.4.1.1 of the SRS DSA Support Document (Ref. 3) discusses extreme winds associated with tropical weather systems, thunderstorms, or strong winter storms.

1.6 EXTERNAL MAN-MADE THREATS

This section identifies specific external man-made phenomena associated with the site that are considered to be potential accident initiators, exclusive of sabotage and terrorism.

Four external events were identified as applicable to the F/H Lab in Section 3.3 of this SAR. These events are aircraft crash, adjacent explosions, adjacent fires, and vehicle crash. As stated in Section 3.3 of this SAR, of these four events, adjacent explosions and fires are not considered credible accident initiators (i.e., frequency of event is less than or equal to 10^{-6}/year) for the release of radioactive material from the F/H Lab. An aircraft or vehicle crash is a credible accident initiator and is discussed in Section 1.6.1.

1.6.1 TRANSPORTATION

Section 1.6 of the SRS DSA Support Document (Ref. 3) describes the rail and road transportation networks, the locations of nearby airports, and the amount of air traffic within the general areas of SRS. Section 1.6.1.2 of the SRS DSA Support Document describes the existing rail system that serves SRS.

A vehicle or aircraft crash resulting in a radioactive material release from the F/H Lab is considered an extremely unlikely occurrence (i.e., frequency of event is greater than 1.0E-06/year and less than or equal to 1.0E-04/year). For such an accident, the consequences would be bounded by the consequences of the facility fire. Therefore, the vehicle and aircraft crash accidents are not analyzed in Section 3.4 of this SAR.

1.6.2 MISSILES AND BLAST EFFECTS

There are no man-made energy sources in F Area capable of generating missiles and blast effects that can credibly impact the functioning of safety significant items identified at the F/H Lab. As stated in Section 3.3 of this SAR, an explosion adjacent to the F/H Lab is not considered a credible accident initiator.

1.7 NEARBY FACILITIES

This section identifies any nearby facilities that could be potentially affected by accidents within the F/H Lab. Conversely, this section identifies any hazardous operations or facilities onsite or offsite that could adversely impact safety of F/H Lab facility operations.

Nuclear, radiological, and industrial facilities in F, H, S, and Z Areas of SRS are described in Section 1.7 of the SRS DSA Support Document (Ref. 3). The SRS DSA Support Document also identifies and evaluates offsite industrial and military facilities that have any potential for mutual safety interaction with F-Area facilities, including F/H Lab.

No postulated accidents analyzed in Chapter 3 of this SAR resulted in a radiological release from a nearby nuclear or radiological facility in F Area (e.g., F Canyon). Moreover, the Preliminary Hazard Analysis in Chapter 3 did not identify any credible hazard from any nearby nuclear, radiological, or industrial facility in F Area (e.g., F Canyon, F Tank Farm) that could result in a radiological release from the F/H Lab.

1.8 VALIDITY OF EXISTING ENVIRONMENTAL ANALYSES

An environmental assessment was required for construction of the new filtration facility, Building 772-4F. Categorical Exclusion #SR/CR 9212004, "Complete Air Filtration Improvements, F-Area, SRS," was given by the DOE Savannah River Operations Office to the Contractor via Reference 31. There have been no significant discrepancies of site characteristic assumptions found during the SAR upgrade process and the natural phenomena hazards qualification of F/H Lab facilities (Ref. 30).

Additionally, a full National Environmental Policy Act-Environmental Impact Statement process was completed for siting of the MOX Fuel Fabrications Facility. The NPH Design Criteria document for the MOX (Ref. 33) did not identify any area discrepancies that would affect this SAR.

1.9 REFERENCES

1. Nuclear Safety Management. Title 10 Energy, Code of Federal Regulations, Part 830, U.S. Department of Energy, Washington, DC, January 2006.

2. Preparation Guide for U.S. Department of Energy Nonreactor Nuclear Facility Safety Analysis Reports. DOE-STD-3009-94, CN3, U.S. Department of Energy, Washington, DC, March 2006.

3. Savannah River Site DSA Support Document – Site Characteristics and Program Descriptions. Rev. 0, WSRC-IM-2004-00008, Westinghouse Savannah River Company, Aiken, SC, October 2004.

4. Facility Safety Document Manual. Manual 11Q, Westinghouse Savannah River Company, Aiken, SC.

5. Conduct of Engineering and Technical Support. Manual E7, Westinghouse Savannah River Company, Aiken, SC.

6. Sagendorf, J.F. and Goll, J.L. XOQDOQ Program for the Meteorological Evaluation of Routine Effluent Releases at Nuclear Power Stations. USNRC NUREG-0324, U.S. Nuclear Regulatory Commission, Washington, DC, 1977.

7. Methods for Estimating Atmospheric Transport and Dispersion of Gaseous Effluents in Routine Releases from Light-Water-Cooled Reactors. USNRC Regulatory Guide 1.111, U.S. Nuclear Regulatory Commission, Washington, DC, 1977.

8. Deleted

9. Deleted

10. Deleted

11. Beard, D.C. and Weyl, P.K. "Influence of Texture on Porosity and Permeability of Unconsolidated Sand." American Association of Petroleum Geologists Bulletin. Vol. 57, pp. 349-369 (1973).

12. Airborne Radiation Removal Building 772-4F. Metcalf and Eddy, Westinghouse Savannah River Company, Aiken, SC, January 1992.

13. Proposed Building 772-4F and Smokestack, Soil and Materials Engineers, Report of Subsurface Exploration. Soil and Materials Engineers, E.I. du Pont de Nemours and Company, July 19, 1989.

14. Naval Reactor Fuel Material Facility, 200-F Area, SRS. Mueser, Rutledge, Johnston, and Desimone, E.I. du Pont de Nemours and Company, Aiken, SC, December 7, 1981.

15. Evaluation of Dynamic Soil Properties, F Area Sand Filters. Geotechnical Engineers Inc., E.I. du Pont de Nemours and Company, Aiken, SC, June 22, 1983.

16. Boring Logs and Lab Tests, Sand Filter Project. Law Engineering, E.I. du Pont de Nemours and Company, Aiken, SC, July 1, 1983.

17. Test Method for Classification of Soils for Engineering Purposes. ASTM D 2487, American Society for Testing and Materials, 1990.

18. Fenimore, J.W. Tracing Soil Moisture and Groundwater Flow at the Savannah River Plant. DP-MS-68-23, E.I. du Pont de Nemours and Company, Aiken, SC, 1968.

19. Standard Test Method for Penetration Test and Split-Barrel Sampling of Soils. ASTM D 1586-84, American Society for Testing and Materials, 1994.

20. Deleted

21. Seed, H.B., Wong, R.T., Idriss, I.M., and Tokimatsu, K. Moduli and Damping Factors for Dynamic Analyses of Cohesionless Soil. Edison Electric Research Council, September 1984.

22. Excavation and Backfill. SRS Engineering Requirement Document 02224-01-R, Rev. 1, Westinghouse Savannah River Company, Aiken, SC, August 1994.

23. Test Method for Laboratory Compaction Characteristics of Soil Using Modified Effort. ASTM D 1557, American Society for Testing and Materials, 1991.

24. Deleted

25. Deleted

26. Siple, G.E. Geology and Groundwater in the Savannah River Plant and Vicinity, South Carolina, United States Geological Survey Water Supply. No. 1841, 1967.

27. Foundation Grouting Operations. U.S. Army Corps of Engineers, Westinghouse Savannah River Company, Aiken, SC, June 1952.

28. K-Reactor Area, Geotechnical Investigation for Seismic Issues. WSRC-TR-91-47, Geotechnical Engineers, Inc., Westinghouse Savannah River Company, Aiken, SC, March 1991.

29. In-Tank Precipitation Facility (ITP) Geotechnical Summary Report. Rev. 0, Westinghouse Savannah River Company, Aiken, SC, September 1994.

30. Baldwin, G.R., Faires, W.E., and Griffin, M.J. Natural Phenomena Hazards Qualification of Buildings 772-F, 772-1F, and 772-4F Structures, Systems, and Components. WSRC-TR-95-0080, Rev. 0, Westinghouse Savannah River Company, Aiken, SC, February 1995.

31. Wright, S.R. to Gordon, D.E. Notification of Department of Energy (DOE) Office of NEPA Oversight (EH-25) Non-response to DOE Savannah River Field Office (SR) Transmittal of NEPA Categorical Exclusions (CX'S) (OK#14). Department of Energy Savannah River Operations Office, Aiken, SC, February 24, 1993.

32. Deleted

33. Wyatt, D. E. Natural Phenomena Hazards (NPH) Design Criteria and Other Characterization Information For The Mixed Oxide (MOX) Fuel Fabrication Facility At Savannah River Site (U). WSRC-TR-2000-00454, Westinghouse Savannah River Company, Aiken, SC, 2003.

34. F-Area Geotechnical Characterization Report (U). WSRC-TR-96-0069, Site Geotechnical Services Department, Westinghouse Savannah River Company, September, 1996.

35. Aadland, R. K. et al. Significance of Soft Zone Sediments at the Savannah River Site (U). WSRC-TR-99-4083, Rev. 0, Westinghouse Savannah River Company, Aiken, SC, September, 1999.

1.10 TABLES

Table 1.3-1 Approximate Distance to the F/H Lab from Other SRS Areas

Miles	Area
0.0 - 1.0	200-H Area (other facilities)
1.0 - 2.0	200-E Area 100-C Area
2.0 - 3.0	700-B Area 200-S Area
3.0 - 4.0	200-Z Area
4.0 - 5.0	100-K Area 300-M Area 700-A Area
5.0 - 8.0	100-R Area 100-L Area 100-D Area 400-D Area 100-P Area

1.11 FIGURES

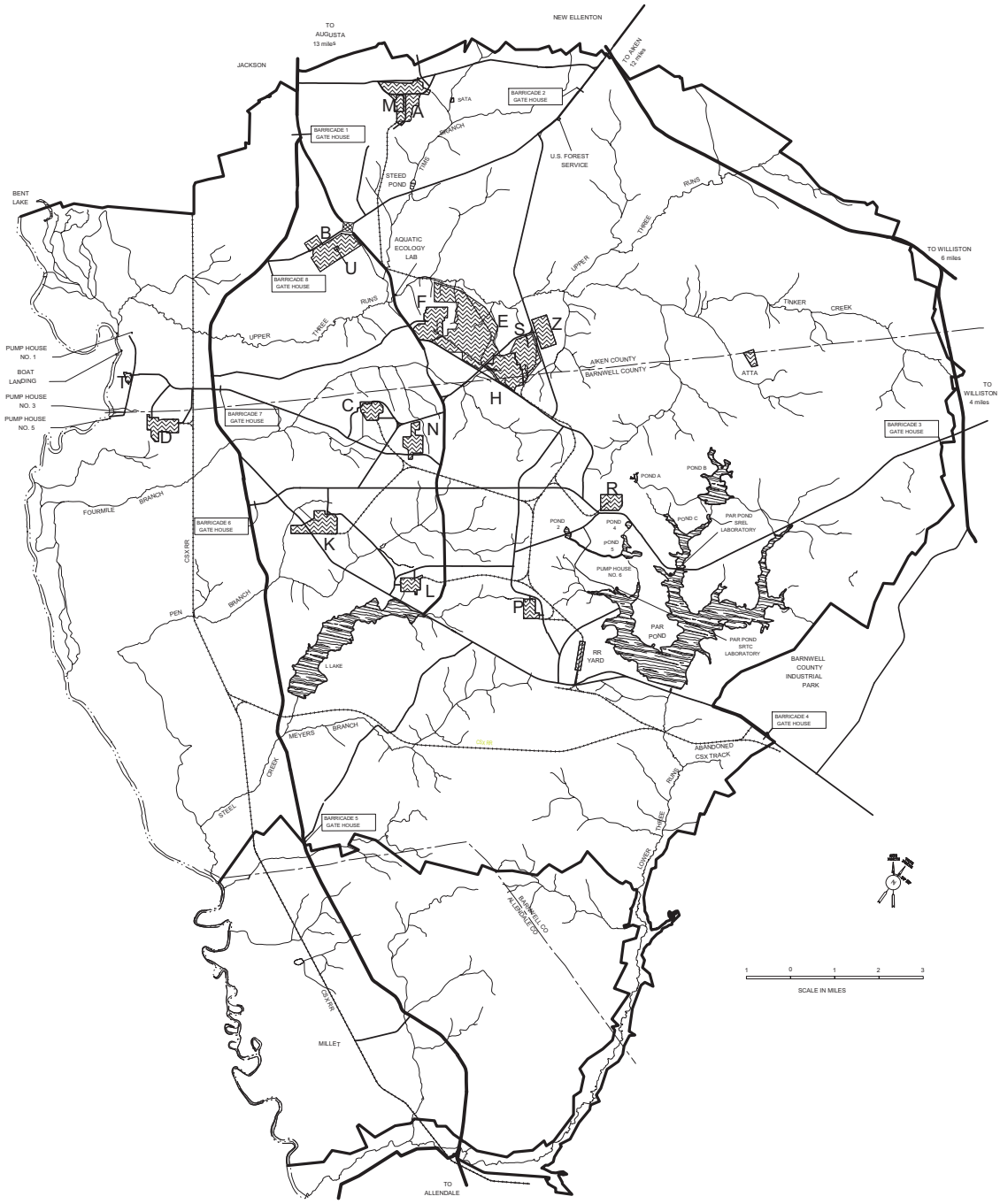

Figure 1.3-1 Savannah River Site

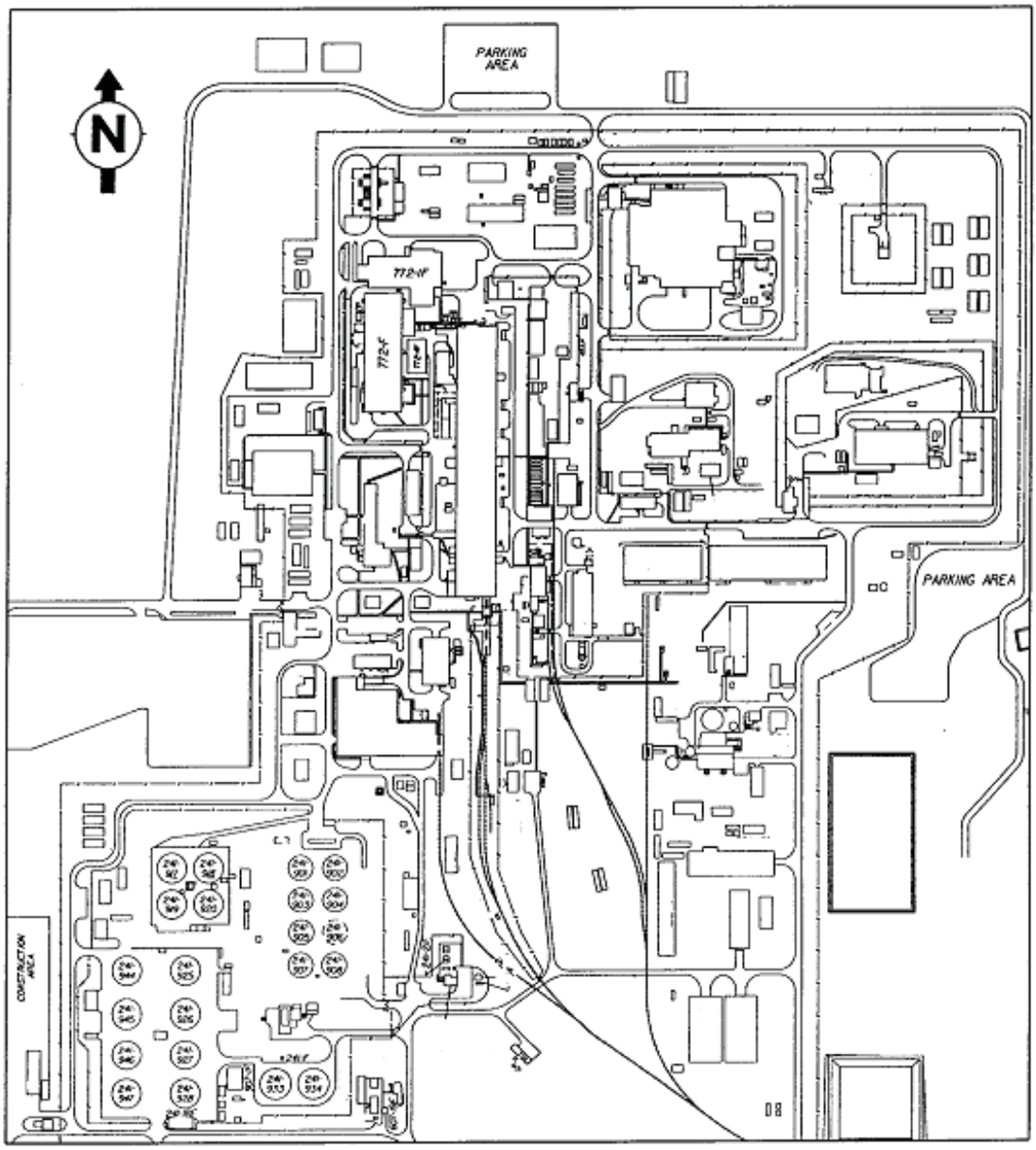

Figure 1.3-2 Map of F Area

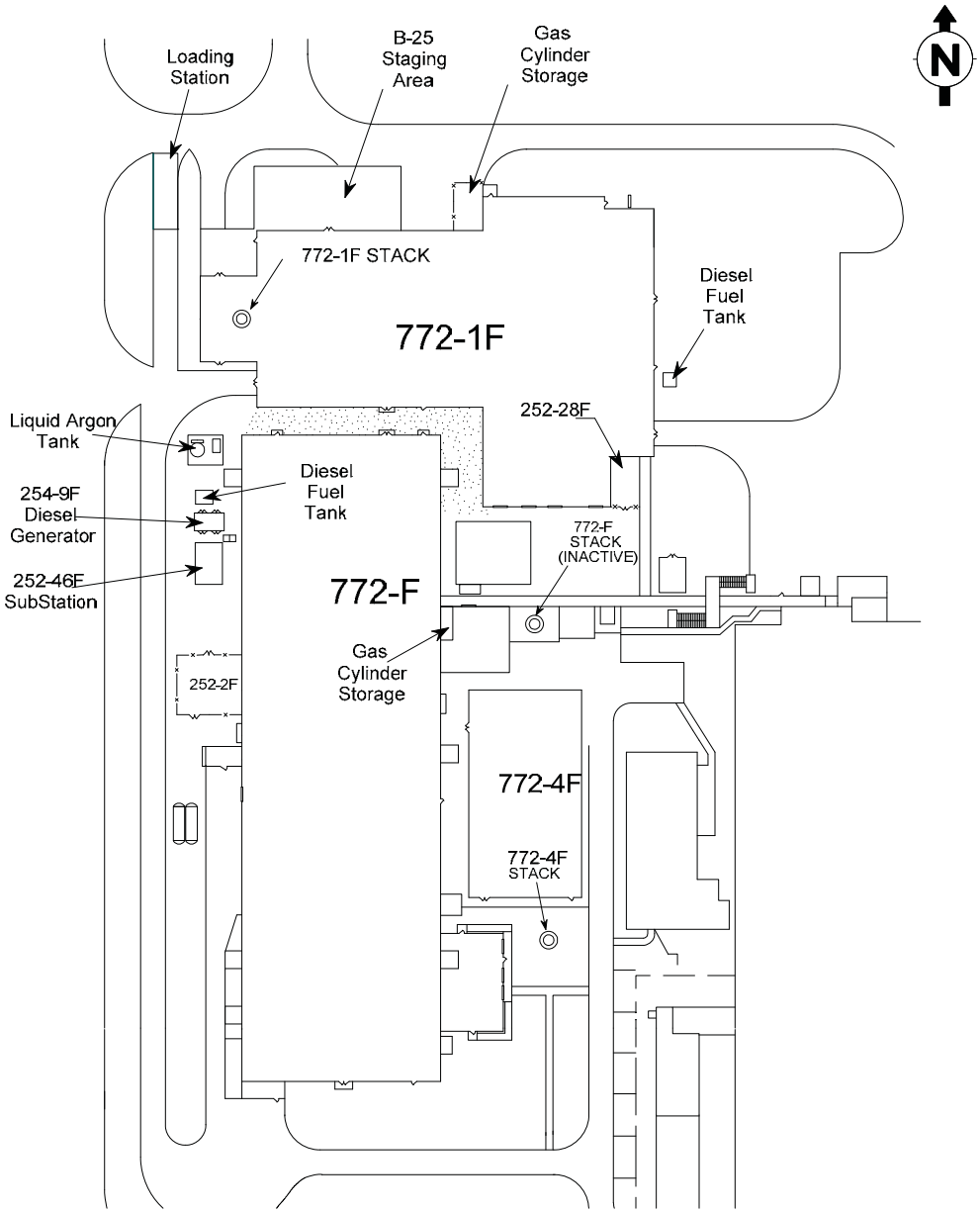

Figure 1.3-3 Relative Locations of Buildings 772-F, 772-1F, and 772-4F

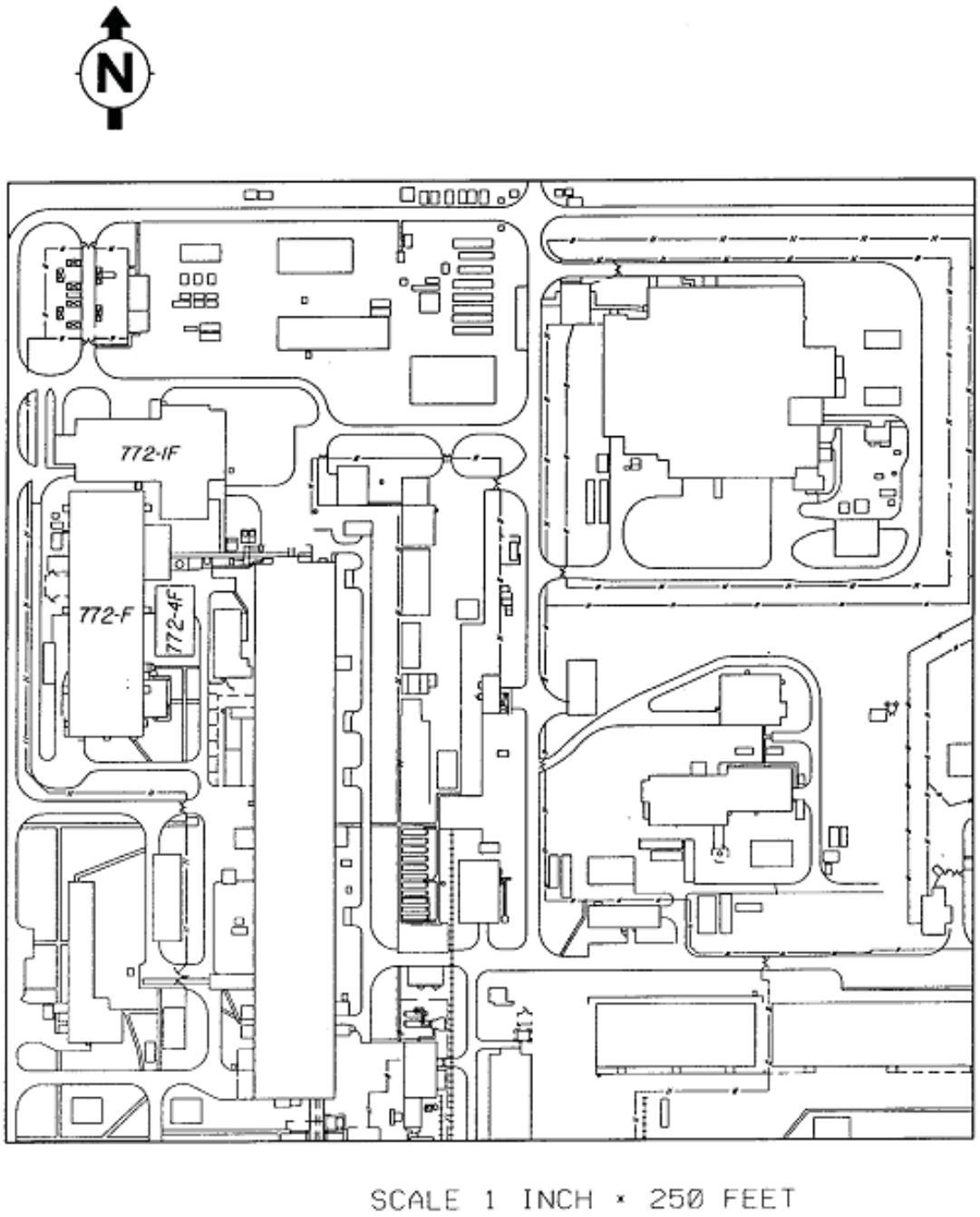

Figure 1.4-1 Area Location Plan

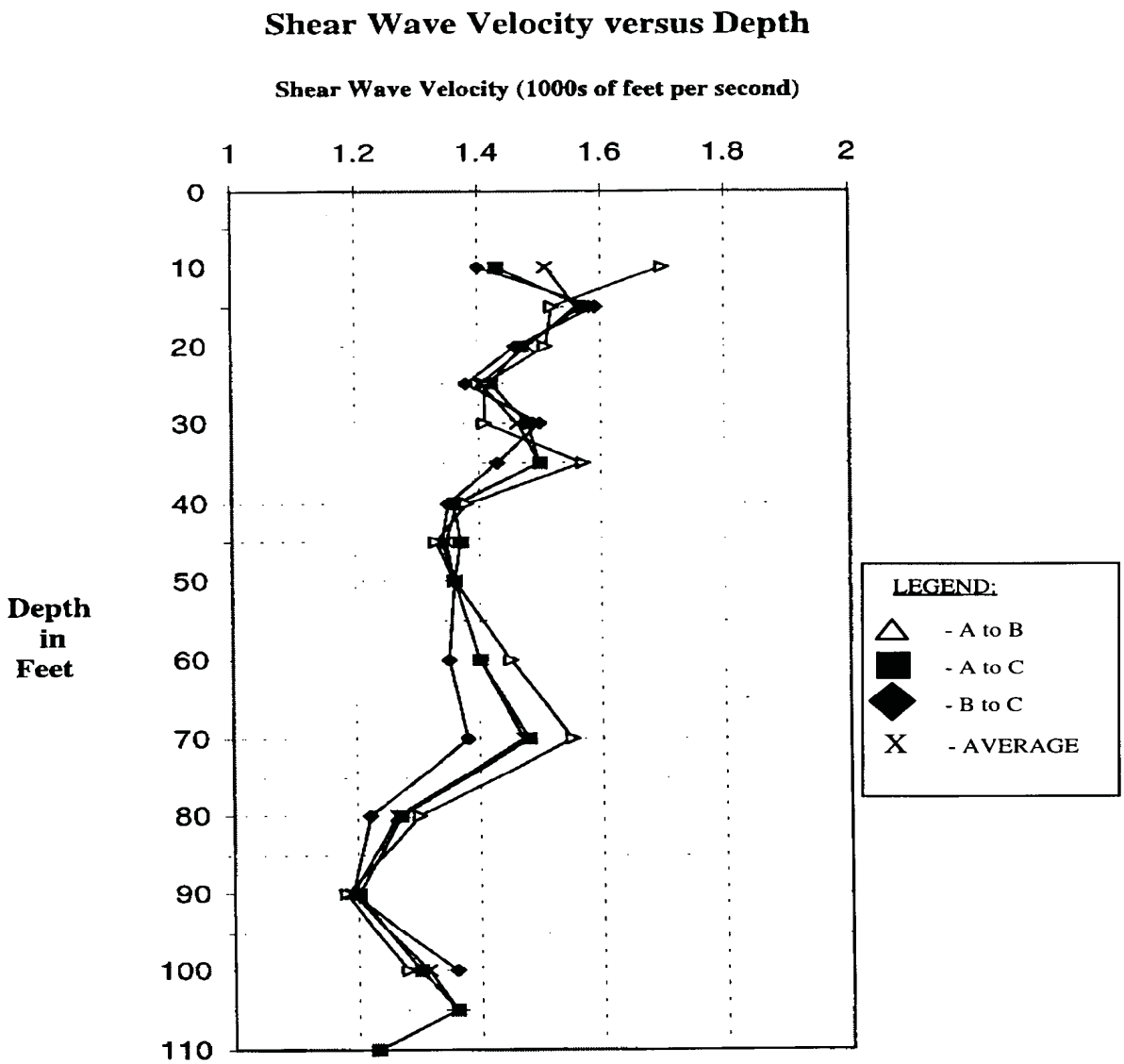

Notes:
Cross-hole survey data using three holes (A, B, and C)
Data represents shear Wave velocity data from A to B, B to C, A to C and the average of the three.

Figure 1.4-2 Shear Wave Velocity Versus Depth

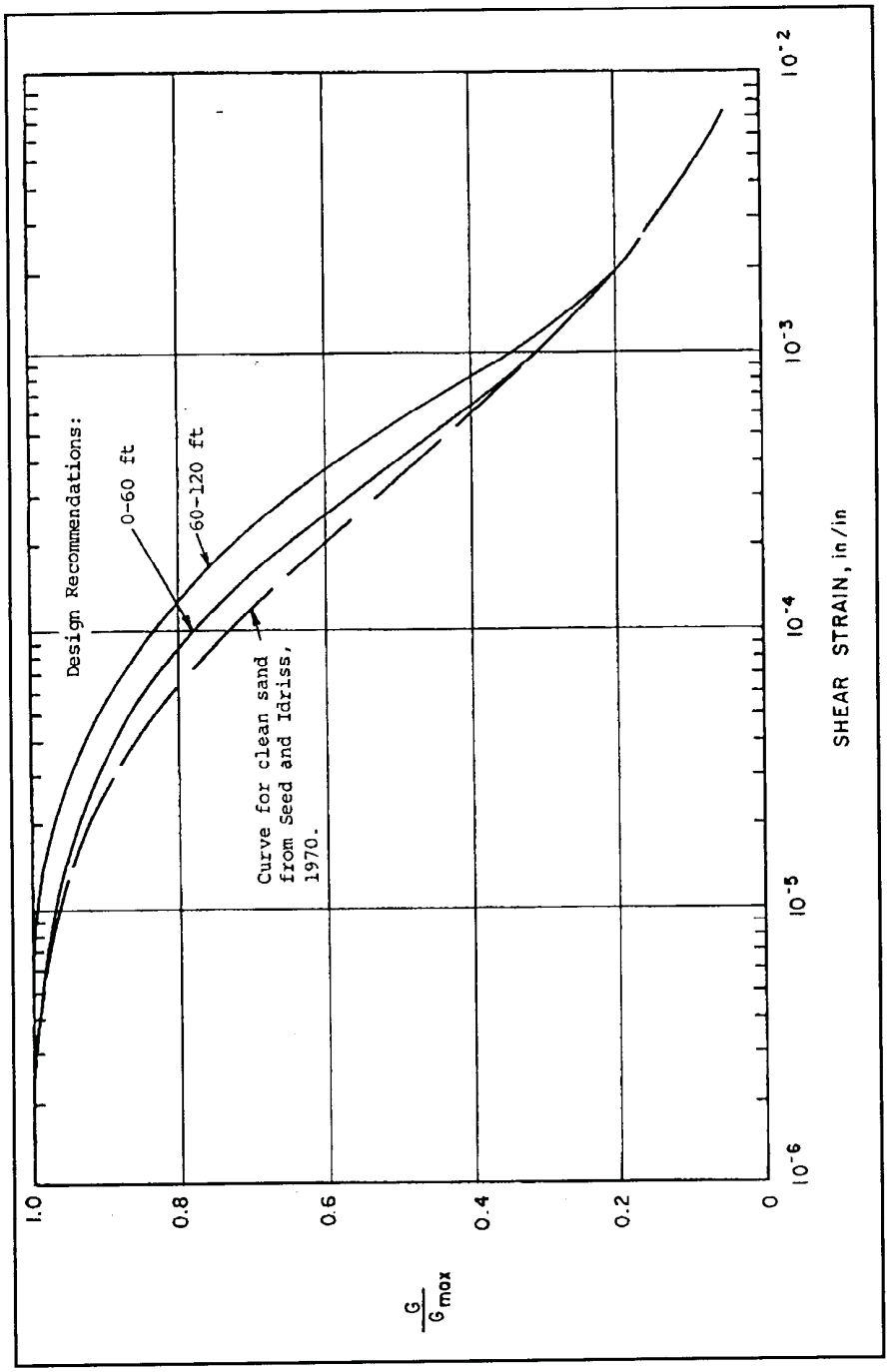

Figure 1.4-3 G/G max Versus Shear Strain

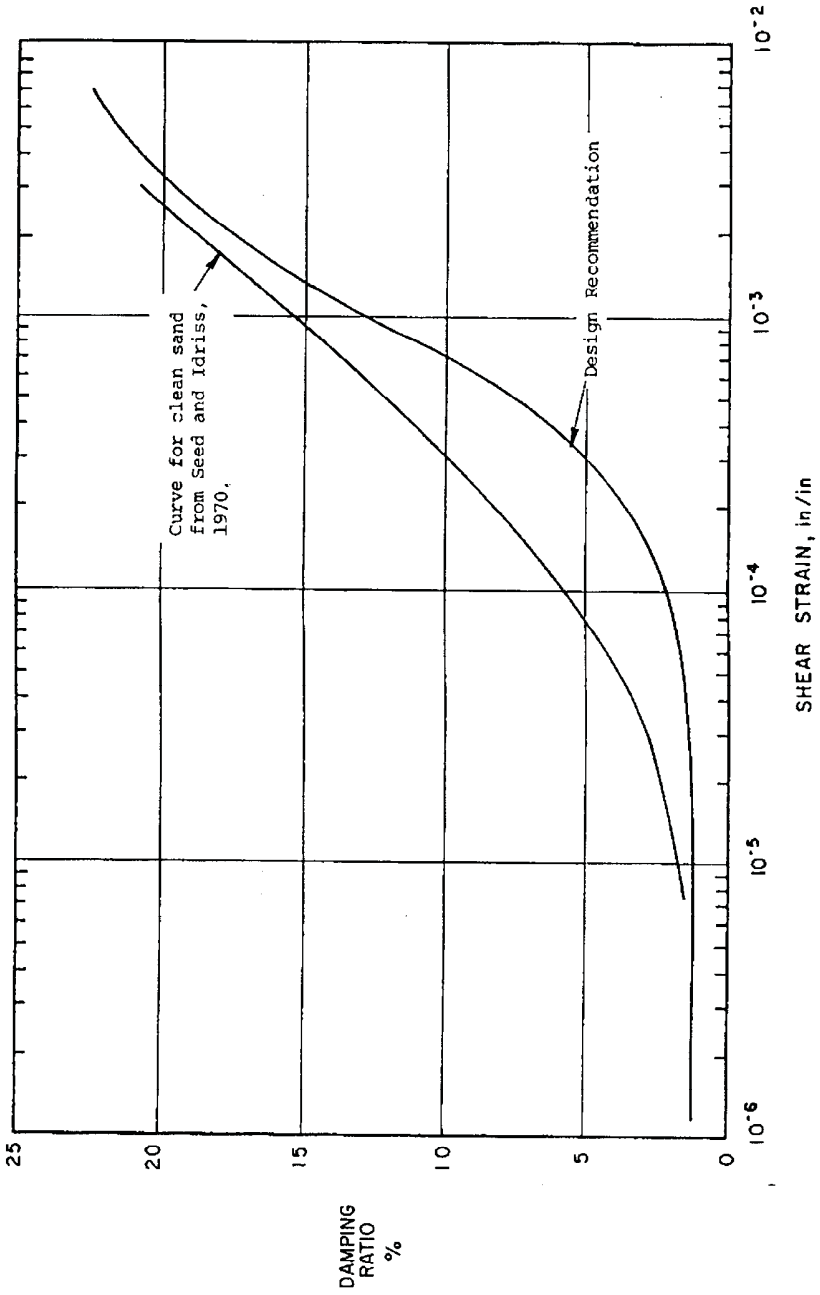

Figure 1.4-4 Percent Damping Ratio Versus Shear Strain

CENTRAL LABORATORY FACILITY - BUILDINGS 772-F, 772-1F, AND 772-4F SAFETY ANALYSIS REPORT

CHAPTER 2

FACILITY DESCRIPTION

August 2010

Savannah River
Nuclear Solutions, LLC
A Fluor Daniel Partnership

DISCLAIMER

This document was prepared by Savannah River Nuclear Solutions LLC (SRNS), under contract with the United States Department of Energy (DOE).

Release to and Use by Third Parties. As it pertains to releases of this document to third parties, and the use of or reference to this document by such third parties in whole or in part, neither SRNS, DOE, nor their respective officers, directors, employees, agents, consultants or personal services contractors (i) make any warranty, expressed or implied, (ii) assume any legal liability or responsibility for the accuracy, completeness, or usefulness, of any information, apparatus, product or process disclosed herein or (iii) represent that use of the same will not infringe privately owned rights. Reference herein to any specific commercial product, process, or service by trademark, name, manufacture or otherwise, does not necessarily constitute or imply endorsement, recommendation, or favoring of the same by SRNS, DOE or their respective officers, directors, employees, agents, consultants or personal services contractors. The views and opinions of the authors expressed herein do not necessarily state or reflect those of the United States Government or any agency thereof.

CONTENTS

Page

2.0 FACILITY DESCRIPTION 2.1-1

2.1 INTRODUCTION 2.1-1

2.2 REQUIREMENTS 2.2-1

2.2.1 Structural Specifications 2.2-1

2.2.1.1 Building 772-F, Abandoned Stack, and Ventilation Tunnel 2.2-1

2.2.1.2 Building 772-1F and Stack 2.2-2

2.2.1.3 Building 772-4F, Stack, and Air Filtration System 2.2-3

2.3 FACILITY OVERVIEW 2.3-1

2.3.1 Facility Configuration 2.3-1

2.3.2 Facility History and Mission 2.3-1

2.3.3 Facility Basic Processes 2.3-1

2.4 FACILITY STRUCTURES 2.4-1

2.4.1 Building Layout and Arrangement 2.4-1

2.4.1.1 Building 772-F 2.4-1

2.4.1.2 Building 772-1F 2.4-2

2.4.1.3 Building 772-4F 2.4-3

2.5 PROCESS DESCRIPTION 2.5-1

2.5.1 Sample Process Systems 2.5-1

CONTENTS (Continued)

Page

2.5.1.1 Functional Requirements and Flow Diagram 2.5-1

2.5.1.2 Radiological and Chemical Inventories 2.5-2

2.5.1.3 Major Components and Major Aspects of the Sample Process Systems 2.5-2

2.5.1.4 Design Description and Basic Process Parameters 2.5-3

2.5.1.5 Instrumentation and Control Systems 2.5-5

2.5.1.6 Operational Considerations and Safety 2.5-5

2.5.2 Off Gas Exhaust System 2.5-6

2.5.2.1 Functional Requirements and Flow Diagram 2.5-6

2.5.2.2 Radiological and Chemical Inventories 2.5-7

2.5.2.3 Major Components 2.5-7

2.5.2.4 Design Description and Basic Process Parameters 2.5-8

2.5.2.5 Instrumentation and Control Systems 2.5-9

2.5.2.6 Operational Considerations and Safety 2.5-10

2.5.3 High- and Low-Activity Drain Systems 2.5-10

2.5.3.1 Functional Requirements and Flow Diagram 2.5-10

2.5.3.2 Radiological and Chemical Inventories 2.5-10

2.5.3.3 Major Components 2.5-11

2.5.3.4 Design Description and Basic Process Parameters 2.5-11

2.5.3.5 Instrumentation and Control Systems 2.5-13

CONTENTS (Continued)

Page

2.5.3.6 Operational Considerations and Safety 2.5-15

2.6 CONFINEMENT SYSTEMS 2.6-1

2.6.1 Building Ventilation Systems 2.6-1

2.6.1.1 Design Basis and Performance Requirements 2.6-1

2.6.1.2 Major Components and Operating Characteristics 2.6-2

2.6.1.3 Safety Considerations and Controls 2.6-11

2.6.2 Containment Units 2.6-14

2.6.2.1 Gloveboxes 2.6-14

2.6.2.2 Radiohoods 2.6-15

2.6.2.3 Radiobenches 2.6-15

2.6.2.4 Shielded Cells 2.6-16

2.6.2.5 High- and Low-Activity Drain System Transfer Tanks 2.6-17

2.6.2.6 High-Efficiency Particulate Air Filters 2.6-17

2.7 SAFETY SUPPORT SYSTEMS 2.7-1

2.7.1 Nuclear Criticality Safety 2.7-1

2.7.1.1 Buildings 772-F and 772-1F 2.7-1

2.7.1.2 Building 772-4F 2.7-2

2.7.2 Fire Safety 2.7-2

2.7.2.1 Buildings 772-F and 772-1F 2.7-2

CONTENTS (Continued)

Page

2.7.2.2 Building 772-4F 2.7-2

2.7.3 Chemical Safety 2.7-3

2.7.3.1 Building 772-F 2.7-3

2.7.3.2 Building 772-1F 2.7-3

2.7.3.3 Building 772-4F 2.7-4

2.7.4 Process Shutdown Modes 2.7-4

2.7.5 Instrumentation 2.7-5

2.7.5.1 High- and Low-Activity Drain Systems 2.7-5

2.7.5.2 Off Gas Exhaust System 2.7-6

2.7.5.3 Main Exhaust System 2.7-6

2.7.6 Remote and Contact Maintenance Techniques 2.7-7

2.7.7 Effluent Monitoring 2.7-7

2.7.7.1 Gaseous Effluent Monitoring 2.7-7

2.7.7.2 Liquid Effluent Monitoring 2.7-10

2.7.7.3 Solid Waste Monitoring 2.7-12

2.7.8 Fire Protection Systems 2.7-12

2.7.8.1 Design Basis 2.7-12

2.7.8.2 System Description 2.7-15

2.7.8.3 System Evaluation 2.7-19

2.7.8.4 Inspection and Testing 2.7-19

2.7.8.5 Personnel Qualification and Training 2.7-19

CONTENTS (Continued)

Page

2.8 UTILITY DISTRIBUTION SYSTEMS 2.8-1

2.8.1 Electrical Power 2.8-1

2.8.1.1 Power Sources and Major Components 2.8-1

2.8.1.2 Grounding 2.8-4

2.8.1.3 Lightning Protection 2.8-4

2.8.1.4 Safety Considerations and Controls 2.8-4

2.8.2 Compressed Air and Gases 2.8-6

2.8.2.1 Major Components and Operating Characteristics 2.8-6

2.8.3 Steam Supply and Distribution 2.8-11

2.8.3.1 Major Components and Operating Characteristics 2.8-11

2.8.4 Water Supply Systems 2.8-12

2.8.4.1 Major Components and Operating Characteristics 2.8-12

2.8.5 Cooling Water Systems 2.8-15

2.8.5.1 Major Components and Operating Characteristics 2.8-15

2.8.6 Safety Communication and Alarm Systems 2.8-17

2.8.6.1 Communication Systems 2.8-17

2.8.6.2 Fire Alarms 2.8-19

2.8.6.3 Warning and Evacuation System 2.8-19

2.8.6.4 Nuclear Incident Monitors 2.8-19

CONTENTS (Continued)

Page

2.8.6.5 Radiation and Stack Monitoring Systems 2.8-20

2.8.7 Maintenance Systems 2.8-20

2.8.7.1 Major Components 2.8-20

2.8.8 Hazardous Chemical Storage and Handling Systems 2.8-20

2.8.8.1 Buildings 772-F and 772-1F 2.8-20

2.8.8.2 Building 772-4F 2.8-21

2.9 AUXILIARY SYSTEMS AND SUPPORT FACILITIES 2.9-1

2.9.1 Control Room 2.9-1

2.9.2 Sampling Systems 2.9-2

2.9.3 Water Treatment and Disposal Systems 2.9-2

2.9.3.1 Sanitary Waste 2.9-2

2.9.3.2 Chemical Waste 2.9-3

2.9.3.3 Other Nonradioactive Effluents 2.9-4

2.9.4 Product Handling Systems 2.9-4

2.9.5 Occupational Health Facilities 2.9-4

2.10 REFERENCES 2.10-1

2.11 TABLES 2.11-1

2.12 FIGURES 2.12-1

TABLES

Page

2.5-1 Typical Laboratory Analyses Conducted in the F/H Lab 2.11-1

2.8-1 Normal Configuration of Equipment 2.11-2

2.8-2 Equipment Supplied by Standby Electrical Power 2.11-3

FIGURES

Page

2.3-1 Relative Locations of Buildings 772-F, 772-1F, and 772-4F 2.12-1
2.3-2 Deleted 2.12-2
2.4-1 Plan View of Building 772-F (Main Floor) 2.12-3
2.4-2 Plan View of Building 772-F (Service Floor) 2.12-4
2.4-3 Plan View of Building 772-1F 2.12-5
2.4-4 Plan View of Building 772-4F 2.12-6
2.5-1 Sample Process Systems (Buildings 772-F and 772-1F) 2.12-7
2.5-2 Off Gas Exhaust System - Building 772-F 2.12-8
2.5-3 Off Gas Exhaust System - Building 772-1F 2.12-9
2.5-4 Low-Activity Drain Systems 2.12-10
2.6-1 Main Exhaust System for Buildings 772-F and 772-4F 2.12-11
2.6-2 Main Exhaust System for Building 772-1F 2.12-12
2.6-3 Typical Glovebox 2.12-13
2.6-4 Typical Radiohood 2.12-14
2.6-5 Typical Radiobench 2.12-15
2.7-1 Fire Alarm Pull Boxes for Buildings 772-F, 772-1F, and 772-4F 2.12-16
2.7-2 Fire Protection Header System for Buildings 772-F, 772-1F, and 772-4F ... 2.12-17
2.7-3 Building 772-F Fire Protection Systems (Main Floor) 2.12-18
2.7-4 Building 772-F Fire Protection Systems (Service Floor) 2.12-19
2.7-5 Building 772-1F Fire Protection Systems 2.12-20
2.7-6 Building 772-4F Fire Protection Systems 2.12-21

FIGURES (Continued)

Page

2.8-1 Single-Line Diagram of Buildings 772-F/772-4F Normal and Standby Electrical Power Supply 2.12-22

2.8-2 Single-Line Diagram of Building 772-1F Normal and Standby Electrical Power Supply 2.12-23

ACRONYMS AND ABBREVIATIONS

AHU	Air Handling Unit
ALARA	As Low As Reasonably Achievable
ANSI	American National Standards Institute
cfm	cubic feet per minute
CR	Control Room
DACT	Digital Alarm Communication Transmitter
DOE	Department of Energy
EBE	Evaluation Basis Earthquake
F/H Lab	F/H Area Laboratory
g	acceleration due to gravity
HAD	High-Activity Drain
HEPA	High-Efficiency Particulate Air
HLDE	High-Level Drain Exhaust
HVAC	Heating, Ventilation, and Air Conditioning
kV	kilovolt
kVA	kilovolt-ampere
kW	kilowatt
LAD	Low-Activity Drain
LLDE	Low-Level Drain Exhaust
MC&A	Material Control and Accountability
MCC	Motor Control Center
mph	miles per hour
mrem/hr	millirem per hour
NFPA	National Fire Protection Association
OGE	Off Gas Exhaust
PC	Performance Category
PGA	Peak Ground Acceleration
psig	pounds per square inch, gage
RCO	Radiological Control Operations
SAR	Safety Analysis Report

ACRONYMS AND ABBREVIATIONS (Continued)

S/RID	Standards and Requirements Identification Document
SRNS	Savannah River Nuclear Solutions
SRS	Savannah River Site
SSC	Structure, System, and Component
STD	Standard
SU	Supply Unit
TEXT	Temporary Emergency Exhaust Treatment
TSR	Technical Safety Requirement
UCRL	University of California Research Laboratory
WG	Water Gage
WSRC	Washington Savannah River Company

2.0 FACILITY DESCRIPTION

2.1 INTRODUCTION

This chapter provides a detailed description of all facility structures, primary process systems, confinement/safety support systems, and utility distribution systems for the F/H Area Laboratory Facility (F/H Lab) (Buildings 772-F, 772-1F, 772-4F, and the B-25 waste container staging areas). The LR-56S loading station is part of the 772-F Facility. The B-25 waste container staging areas are considered an F/H Lab facility segment for hazard categorization and accident analysis purposes only and contain no Structures, Systems, and Components (SSCs) other than waste containers. All major equipment, instrumentation, and operating characteristics whose failure could cause or contribute to a hazardous condition are also identified. Emphasis is placed on those systems that are necessary for the following:

- Safe shutdown
- Maintaining the facility in a safe shutdown condition
- Confinement and containment functions
- Providing backup or standby capabilities

No auxiliary process systems are installed in Buildings 772-F, 772-1F, 772-4F, or at the B-25 waste container staging areas. Equipment used to ensure that process safety is maintained is described in sufficient detail to provide a fundamental and integrated understanding of facility operation. Compliance with codes and standards, Department of Energy (DOE) Orders, and regulatory requirements for the facility is also discussed.

Detailed equipment and process descriptions are provided in this chapter to the extent considered sufficient to support the assumptions used in the hazard and accident analyses. These descriptions focus on all major facility features necessary to understand the hazard and accident analyses in addition to facility safety features. More detailed equipment/system descriptions are provided in system design descriptions, as available.

2.2 REQUIREMENTS

2.2.1 STRUCTURAL SPECIFICATIONS

2.2.1.1 Building 772-F, Abandoned Stack, and Ventilation Tunnel

Building 772-F was designed in 1952 as a Class I, blast-resistant structure in accordance with Specification 3580 for Project 8980 (Ref. 1). Specification 3580 (which can be found in Site Structural Specification 7096) required that the facility be designed according to the January 1, 1946, Uniform Building Code, with the following provision for unusual loading conditions due to a bomb blast and for other reasons peculiar to the facility's function and location (Ref. 2).

CLASS I - BLAST-RESISTANT CONSTRUCTION

The building was designed for a static live load of 1,000 pounds per square foot acting simultaneously on the gross area of the outside face of exterior walls and roof. Foundations and building anchorage were checked for overturning produced by the 1,000 pounds per square foot load acting on one face only at one time. The exterior walls and the roof were required to be reinforced concrete to provide blast resistance.

NATURAL PHENOMENA HAZARD QUALIFICATION: BUILDING 772-F, ABANDONED STACK, AND VENTILATION TUNNEL

To support the Safety Analysis Report (SAR), a natural phenomena hazard qualification of the F/H Lab was performed (Ref. 3). The qualification included Building 772-F, the abandoned stack, and the ventilation tunnel. The qualification compares these structures to the requirements specified in the following documents:

- Savannah River Site (SRS) Engineering Standards Manual (Ref. 4)
- University of California Research Laboratory (UCRL)-15910 (Ref. 5)
- DOE Orders 6430.1A and 420.1 and their attendant standards (DOE Standard [STD] 1020-94 and DOE-STD-1021-93) (Ref. 6, 7, 8, 9)

Building 772-F was evaluated for structural integrity and confinement under Performance Category (PC) 3 (moderate hazard) earthquake and tornado loads (envelopes wind) and found to be adequate. (The performance categories are described in DOE Order 420.1, DOE-STD-1020-94, and DOE-STD-1021-93.) The assessment for a 0.20g Peak Ground Acceleration (PGA) Evaluation Basis Earthquake (EBE) shows adequate capacity when moment redistribution is considered in the analysis.

The results show that minor flexural cracking of the concrete below grade could result but that the confinement boundary would not be breached.

Additional bracing was found to be required for the steel framing of the Air Handling Units (AHUs) 1 through 4 on Building 772-F's roof to prevent the AHUs from impacting and breaching Building 772-F's roof during a seismic event. The AHUs' steel framing previously could not withstand a 0.20g maximum acceleration based on code criteria. The minor modification of installing additional bracing has seismically qualified the steel framing and prevents the AHUs from impacting and breaching the roof of Building 772-F during a seismic event. This modification has been completed. The accident analysis in Chapter 3 of this SAR takes credit for these modifications to the steel framing of the AHUs.

The Building 772-F abandoned stack was found to be adequate for PC-3 (moderate hazard) tornado wind and the 0.20g EBE. Therefore, the Building 772-F abandoned stack is not an interaction source for Buildings 772-F and 772-4F.

The ventilation tunnel and stainless steel duct between Buildings 772-F and 772-4F and the off gas exhaust piping duct between Buildings 772-F and F-Canyon have been evaluated for loss of confinement due to a 0.20g PGA EBE. These structures and components were qualified for a 0.20g PGA EBE.

2.2.1.2 Building 772-1F and Stack

Building 772-1F was designed in the mid-1980s to be “standard” construction in accordance with Site Structural Specification 7096 (Ref. 2). This included design for a 50-year wind and lateral loads of 10% of the vertical gravity loads for an earthquake. This difference in design between Buildings 772-F and 772-1F was due to the small inventory of radioactive material expected in Building 772-1F, which would result in a maximum dose to the offsite individual that is less than the DOE accident guidelines for new plutonium facilities, for any of the natural phenomena considered as delineated in DPST-83-485 (Ref. 10).

Building 772-1F was designed in accordance with Specification 8299 for Project S4238 (Ref. 11). This specification required that the facility be designed according to the Standard Building Code (Coastal Zone) and Site Structural Specification 7096 (Standard Construction).

NATURAL PHENOMENA HAZARD QUALIFICATION: BUILDING 772-1F AND STACK

A natural phenomena hazard qualification was also performed for Building 772-1F and the Building 772-1F stack (Ref. 3).

Building 772-1F was evaluated for PC-2 (low hazard) loads (wind and seismic). The building’s steel framing system, roof diaphragm system, columns, and Concrete Masonry Unit wall footings are adequate for the PC-2 criteria earthquake and a 100 miles per hour (mph) wind. There were isolated cases where the code criteria were exceeded or not met for certain structural members, walls, and footings. Minor cracking of the exterior Concrete Masonry Unit walls may occur starting at 69 mph; however, building collapse will not start before 100 mph.

The Building 772-1F stack was found to be structurally adequate for PC-3 loads (wind and seismic) and a 0.20g PGA EBE.

2.2.1.3 Building 772-4F, Stack, and Air Filtration System

Building 772-4F was designed and constructed to meet the low-hazard requirements of UCRL-15910 and DOE Order 6430.1A (Ref. 5, 6). The exhaust stack associated with Building 772-4F was designed to the high-hazard requirements of DOE Order 6430.1A and UCRL-15910 due to its proximity to F-Area Canyon.

NATURAL PHENOMENA HAZARD QUALIFICATION: BUILDING 772-4F, STACK, AND AIR FILTRATION SYSTEM

A natural phenomena hazard qualification was also performed for Building 772-4F, the Building 772-4F stack, and the Building 772-4F air filtration system (Ref. 3).

Building 772-4F was found to satisfy the low-hazard code requirements, which are equivalent to PC-2 loads (wind and seismic). In addition, Building 772-4F is structurally adequate to remain standing after a 0.20g PGA EBE using the Uniform Building Code methodology and the ultimate capacity of the material.

The Building 772-4F stack was found to be adequate for high-hazard loads, including a 0.20g PGA design basis earthquake. In addition, the stack was evaluated and found to be adequate for loads induced by a 0.20g PGA EBE on the Heating, Ventilation, and Air Conditioning (HVAC) duct attached to the stack.

The Building 772-4F air filtration system has a seismic capacity greater than or equal to a 0.20g PGA EBE and will maintain the confinement of the exhaust path, provided minor structural upgrades summarized in WSRC-TR-95-0080 are implemented before Building 772-F resumes production activity (Ref. 3). The upgrades have recently been implemented and completed. This conclusion and the structural upgrades recommended are based on detailed walkdown reviews of the designated portions of the HVAC systems and components, review and use of existing design calculations as appropriate, and additional analytical evaluations to demonstrate structural integrity. The accident analysis in Chapter 3 of this SAR takes credit for these minor structural upgrades to the air filtration system.

2.3 FACILITY OVERVIEW

2.3.1 FACILITY CONFIGURATION

The Production Control Facilities, New Production Control Facilities, and Airborne Radiation Removal Facility are part of SRS and are located in Buildings 772-F, 772-1F, and 772-4F, respectively. Collectively, these buildings are known as the F/H Lab.

The 200-F Area is one of two chemical separations areas located near the center of the site, between Upper Three Runs Creek to the north and Four Mile Creek to the south. The principal unit in the 200-F Area is a chemical separations facility. The second chemical separations facility is located in H. The F/H Lab is located immediately to the west of F-Area Canyon. Figure 2.3-1 shows the relative location of the three F/H Lab buildings.

Buildings 772-F and 772-1F contain external storage facilities for diesel fuel and compressed gases as shown in Figure 2.3-1. Low-level radioactive waste materials are temporarily stored in B-25 waste containers in the B-25 waste container staging areas outside Buildings 772-F and 772-1F. Building 772-4F has no external storage facilities. There are no holding ponds associated with these buildings.

2.3.2 FACILITY HISTORY AND MISSION

Building 772-F was placed in service in the mid-1950s. Building 772-1F began operations in 1987, and Building 772-4F was placed in service in July 1993.

The primary mission of the F/H Lab has been to support the chemical separations processing activities at Buildings F-Canyon and H-Canyon. Samples received from the canyons and other site areas are subjected to the required radiological and chemical analysis tests. Results from these tests are used to effectively and safely operate the canyon facilities. The mission of the F/H Lab has remained relatively unchanged over the five decades of operation. The projected future use of the facility is to continue its mission to support the separations processes and to provide support for the increasing waste management, waste characterization, waste stabilization, SRNL and environmental remediation activities at SRS. The mission of the F/H Lab will continue to change as the site mission changes.

The laboratories also support the tank farm operations, reactor area programs, the Effluent Treatment Facility, and site waste characterization efforts. The laboratories also provide analytical support for non-SRS customers.

2.3.3 FACILITY BASIC PROCESSES

The primary functions conducted in the F/H Lab involve radiological and chemical operations. These operations include sample preparation for instrument analysis or titration, reagent

preparation, and standard preparation/characterization. These operations typically involve the following:

- Sample aliquoting and dilution
- Sample valence adjustment with oxidizing/reducing agents
- Matrix adjustment with acid/bases
- Pre-treatment/purification using organic extraction or anion exchange purification

These operations involve the handling of nuclear materials and chemicals in limited bench-scale quantities.

Buildings 772-F and 772-1F contain the following process systems used to accomplish their primary functions:

- Sample process system
- Off Gas Exhaust (OGE) system
- Main exhaust systems
- High-Activity Drain (HAD) and Low-Activity Drain (LAD) systems

The primary function of the Airborne Radiation Removal Facility (Building 772-4F) is to support the tasks performed in Building 772-F by serving as the main exhaust filtration building and fan house.

2.4 FACILITY STRUCTURES

2.4.1 BUILDING LAYOUT AND ARRANGEMENT

2.4.1.1 Building 772-F

Building 772-F consists of two levels with the first level, also known as the service floor, located underground. The service floor contains most of the service and utility support systems. These systems include the diesel generators, some of the electrical distribution panels, the Motor Control Centers (MCCs), and the various pumps and water tanks. This level also includes Shielded Areas A, B, C, E, and High Activity Drain Tank F, some of the ventilation fans and filter housings; and both the Electrical and Instrument and maintenance shops. Entry into shielded areas is controlled by procedure. The abandoned stack, which previously supported the main exhaust system, is located to the east of Building 772-F.

The second level, also known as the main floor, contains the following:

- Laboratory modules
- Shielded cells
- Office areas
- Computer rooms
- Many of the electrical distribution panels
- Conference rooms
- Men's and women's change areas
- Lunchroom

Figures 2.4-1 and 2.4-2 show the general layout and arrangement of Building 772-F, including the functional features and major equipment layout.

The laboratory modules are designed with the modules generally situated back to back and interconnected by utility and personnel corridors. The standard size of a laboratory module is 12 feet by 24 feet, although some are larger. The laboratory modules are separated by sheet metal wall panels and by service strip areas or covered pipe spaces. Sheet metal wall panels and studs form walls that are generally 4 inches thick and are not fire-rated. Each module is provided with standard laboratory furniture with corrosion-resistant tops for ease of decontamination.

Each floor consists of approximately 40,000 square feet (ft^2) of floor space. Six AHUs for 772-F are located on the building roof. LAD system transfer tanks, used for temporary storage of radioactive liquids, are located underground and immediately adjacent to the east wall of the building. Two out of service HAD system Transfer Tanks are located in cells next to the LAD system tanks. A sample tunnel connects Building 772-F with Building 772-1F and F-Canyon.

Auxiliary modules and office spaces, located adjacent to the building walls, are standard 12 feet by 14 feet. Auxiliary modules are equipped with laboratory services. Lighting in each office consists of standard fluorescent fixtures mounted on the ceiling.

Separate change room facilities for men and women are located in the central section of the building. These facilities provide access to the radiological laboratories.

2.4.1.2 Building 772-1F

Building 772-1F is a relatively new structure designed to house a portion of the analytical operations previously performed in Building 772-F. Building 772-1F was built in the mid-1980s as a standard commercial structure and houses approximately 15 laboratory modules, four shielded cells, a Control Room (CR), and other ancillary facilities.

Building 772-1F is a two-level structure located above ground. Building 772-1F contains the laboratories, the shielded cells, and other ancillary facilities, including the mechanical equipment room. Overall floor space is approximately 31,400 ft^2. Two AHUs are located on the upper level of the building. A 135-foot stack is used to discharge the building exhaust after it is filtered through High-Efficiency Particulate Air (HEPA) filters.

Figure 2.4-3 shows the general layout and arrangement of Building 772-1F, including the functional features and major equipment layout.

Samples are received, prepared for analysis, and analyzed in Building 772-1F. The main sample receiving area is located in Room 147 and is used for receipt and logging in of samples. The sample receiving area is also used as a means of transition for physically moving samples between laboratories and between the receiving and shipping area. Sample residues containing significant quantities of valuable materials (primarily plutonium) are accumulated and prepared for return to any of the following locations:

- H-Canyon for processing
- Solid Waste Disposal Facility
- Other production facilities for recovery of nuclear materials

Much of the equipment used throughout the various laboratories is of the same or similar design as for Building 772-F or provides a common service throughout the facility. This equipment includes the following:

- Bench cabinets
- Constant air monitors
- Gloveboxes
- Radiobenches
- Radiohoods
- Sinks

- Wall cabinets

2.4.1.3 Building 772-4F

The Airborne Radiation Removal Facility (Building 772-4F) represents a major addition to the main exhaust system of Building 772-F. Exhaust air that was previously discharged out of the Building 772-F stack has been redirected to the new Airborne Radiation Removal Facility stack. Building 772-4F was constructed to meet low-hazard requirements.

Building 772-4F is a 33-foot-high, one-level, above-ground structure with two mezzanine areas located in the northeast and southeast areas of the building. This building houses two stages of HEPA filters, the associated main exhaust fans, and a 190-foot stack for the main exhaust system in Building 772-F. Overall floor space, excluding the mezzanine areas, is approximately 7,600 ft^2. The building is exhausted by two wall-mounted ventilation fans.

Figure 2.4-4 shows the general layout and arrangement of Building 772-4F, including the functional features and major equipment layout.

In Building 772-F, air from the laboratories, radiohoods, radiobenches, Shielded Area A, fan room, and tank cells is exhausted through the existing plenum and tunnel to Building 772-4F. Air from Shielded Areas B and C is exhausted by way of Shielded Area A. The only air exhausted from Building 772-F that does not run through the existing plenum and tunnel is the service floor exhaust (i.e., change rooms, restrooms 142 and 144, and the service floor). The service floor exhausts to a single-stage HEPA filtration system in Building 772-4F and discharges to the Building 772-4F stack.

Building 772-4F contains trace quantities of nuclear materials and hazardous chemicals collected in the HEPA filters, which do not pose a potentially hazardous condition to personnel or equipment.

2.5 PROCESS DESCRIPTION

Buildings 772-F and 772-1F contain three process systems as identified in Section 2.3. These individual systems are described in this section to provide the following:

- An understanding of the assessment of normal operation
- An understanding of the safety analysis and its conclusions
- Insights into the types of operations for which a safety management program must be devised

2.5.1 SAMPLE PROCESS SYSTEMS

2.5.1.1 Functional Requirements and Flow Diagram

The primary function of Buildings 772-F and 772-1F is to conduct laboratory analyses using chemicals and nuclear material to support typical site missions such as activities involving the chemical separations and waste management areas and waste characterization/environmental remediation programs. Building 772-4F does not contain any direct sampling or analytical facilities.

The major objectives of the sample process systems are to safely analyze samples and to return and/or dispose of the samples received. The objectives are accomplished through a system of Material Control and Accountability (MC&A) and a framework of procedures, including the following:

- Material inventory systems
- Storage control
- Material and process monitoring
- Authorization for material movement
- Establishment of material boundaries
- Personnel radiation protection

Figure 2.5-1 provides a schematic diagram of the sample process systems. This flow diagram illustrates the generalized process from the time a sample is received, recorded, transferred, and analyzed to the time it is disposed of or targeted for recovery.

The analytical support operations conducted in the F/H Lab are varied and unique to each particular laboratory process. Analytical support functions, such as the following, are conducted in accordance with detailed procedures developed from technical standards:

- Mass spectrometry
- Alpha and gamma pulse height analyses

- Uranium fluorophotometry
- Argon inductively coupled plasma spectrometry
- Chemical analysis

The detailed steps for each process and the limiting parameters of operation are contained within each laboratory analytical procedure. Because of the uniqueness, variation, and continuing change inherent in laboratory support work conducted in these buildings, process flow sheets are not provided for each analytical operation.

The objective of MC&A is to protect nuclear materials from theft or diversion. MC&A safeguards are also concerned with malevolent activities that might be undertaken by authorized personnel (insiders), although such activities overlap with those carried out for the purposes of physical protection. Well-implemented sample process systems complement the MC&A safeguards to help protect nuclear materials from unauthorized use and improper handling.

2.5.1.2 Radiological and Chemical Inventories

The F/H Lab is a nonreactor nuclear facility. Buildings 772-F and 772-1F contain radioactive and fissile materials in such quantities that a nuclear hazard potential exists. The Technical Safety Requirements (TSRs) derived in Chapter 5 of this SAR and identified in the TSR document require administrative controls with regard to the types and quantities of nuclear materials allowed at F/H Lab (Ref. 12). These radionuclide material limits are specified to assure safe operations and to support source term assumptions used in the accident analyses of Chapter 3.

The F/H Lab does not produce or process chemicals. The mission of the F/H Lab is such that small quantities of chemicals are used and very small quantities of byproducts are produced in the process of conducting laboratory analyses. WSRC-TR-94-0114 and WSRC-TR-94-0115 provide the types and maximum inventories of chemicals typically used to conduct analytical operations in Buildings 772-F and 772-1F, respectively (Ref. 13, 14). The chemicals are controlled by the chemical control program identified in the TSR (Ref. 12).

The sample analyses conducted in the F/H Lab are numerous and constantly evolving to support site operations. Table 2.5-1 lists typical laboratory analyses. Detailed descriptions of these analytical activities are not included in this SAR because of the many ongoing associated changes. (For the most current, detailed description of each analysis and testing standard, refer to the appropriate F/H Lab Multi-Group Analytical Procedure [Ref. 15].)

2.5.1.3 Major Components and Major Aspects of the Sample Process Systems

The sample process systems in the F/H Lab do not extract samples directly from primary or auxiliary systems. The sample process systems receive samples for analysis from other areas throughout SRS, primarily from the separations and waste management facilities. The major components of the sample process systems are as follows:

- Receipt inspection activities
- Confinement boundaries (e.g., gloveboxes, radiohoods, and radiobenches) and shielded cells
- Various laboratory equipment used to conduct the sample analyses
- Operation and administrative procedures
- Material controls
- Process monitoring
- Radiological Control Operations (RCO) personnel

Although some of the components of the sample process systems are not physical hardware, they represent major aspects of sample analysis.

2.5.1.4 Design Description and Basic Process Parameters

Manual L2-1 describes the handling of accountability and physical inventory samples in the F/H Lab in a way that provides quality analytical data (Ref. 15). Guidelines and requirements are included for each step of the process for the following:

- Sample inventory activities
- Receipt inspection
- Sample and synthetic measurements
- Oversight
- Cycle time

Instructions are also provided for the logging and tracking of accountability and nuclear safety samples. Only nuclear safety samples that are submitted in duplicate and properly marked with blue labels are analyzed. Instructions are also provided for reporting analytical results. These samples are received and handled by trained and authorized personnel.

Material accounting systems track nuclear material through the facility and provide quantitative data on material flows and inventories. The F/H Lab is subdivided into material balance areas representing identifiable physical locations where measurable quantities of nuclear materials are moved in and out and are represented by a measured value. On a regular basis, the flow of nuclear material into and out of these material balance areas is compared with the measured nuclear material inventories to establish that material has not been removed from the system and to account for all nuclear material at all times. Administrative guidelines provide for the receipt and control of nuclear safety samples by the F/H Lab.

As stated previously, the main sample receiving area for the F/H Lab is located in Room 147 of Building 772-1F. Samples are delivered by sample trucks from other areas. From Room 147, samples either are distributed to the various Building 772-1F laboratory areas for analysis or are distributed to Building 772-F laboratory areas via connecting passageways.

In Building 772-F, a hydraulic lift may be used for the transfer of sample carts and process samples from the H-Area sample truck to the sample passageway floor level. This lift may also be used for loading and unloading materials and equipment delivered directly to Building 772-F from other areas of the site.

Physical inventory samples from H Area are typically identified with the codes “ACCT” and “ACCT-A” while F-Area samples are typically coded “A-1 Code,” “A-2 Code,” etc. Each accountability and physical inventory sample received in the F/H Lab is assigned a unique log number for tracking purposes. When samples are logged at the sample receiving area, a “hold label” is placed on the sample container and is not removed until the samples are authorized for dumping, recovery, etc. Analytical work slips (showing the analysis requested, method to be used, and sample aliquot needed) are generated in the sample receiving area at the time of receipt. In addition, an area gamma meter is placed in the receiving area.

Intermediate- and low-activity radioactive samples are stored in lead-shielded bins. Samples are monitored as they are received. As required, shielded sample carriers are transferred into hand-carried, lightly shielded containers. Clean carriers and plastic sample thieves (e.g., vial holders used in removing samples from process equipment) are also stored in these containers.

Upon delivery of samples to the appropriate laboratory, the samples are subjected to analytical measurements by authorized work groups. Density and volume measurements are typically performed to validate applicable sample accountability. Guidelines for sample validation are provided in the laboratory areas. Technicians who perform analytical measurements are trained and qualified for the methods performed.

All nuclear safety samples are analyzed using the current, approved, use-every-time procedures of Manual L2-1. These procedures are present at the job location and require the signatures of technicians and supervisors when key procedural steps are completed. These procedures also provide administrative guidelines for analysis, reanalysis, records generation, and retention and precision limits for nuclear safety samples. Under normal circumstances, all nuclear safety sample analytical results are reported by way of a computerized system. Paper copies of the results are generated and maintained as records.

All F- and H-Area accountability sample analyses are completed within specified time limitations from the time a sample is declared “valid” by laboratory personnel. Samples are considered “valid” when density measurements between duplicate samples agree within established limits and when single sample densities agree with the listed panel board densities. If the cycle time cannot be met by the work group performing the accountability measurement, the customer is notified by the supervisor of the group performing the analysis. The specified cycle time is not tracked as an indicator of timely reporting of accountability sample results; rather it is used to enhance communication between the laboratory and its customers.

The work group performing the accountability measurement is responsible for ensuring timely and accurate reporting of results. Technicians are responsible for ensuring that only validated results are reported. Manual L2-1 provides the administrative guidelines for measuring and reporting of nuclear safety samples by personnel in the F/H Lab.

After all analyses on process control, accountability, and nuclear safety samples are completed, and after all required reports are transmitted to the appropriate customers, samples from Buildings 772-F and 772-1F are prepared for disposal or recovery. Samples are held to allow for customer review of reported results or until approval for disposal (or recovery). Samples authorized for recovery are discharged to the high-activity transfer Tank F by way of the HAD system and returned to H-Area.

2.5.1.5 Instrumentation and Control Systems

Instrumentation and controls used in the sample process systems consist primarily of effluent monitors, local radiation and contamination control monitors, and instruments used in conducting each analytical activity. Section 2.7 describes effluent monitoring instrumentation and radiation/contamination monitoring/control practices currently used in Buildings 772-F and 772-1F.

Instrumentation used in the performance of analytical activities is not discussed herein because it is subject to periodic and in-process changes and equipment upgrades to support the separations and waste management areas and the changing missions of facilities throughout SRS.

FUNCTIONAL REQUIREMENTS

The function of the major instrumentation used in the sample process system is to provide a continuous sensing of radiation activity and to alert building personnel of abnormal radiation levels during the course of sample receiving, analysis, and disposal. Section 2.7 describes the functional requirements of these instruments.

INSTRUMENTATION AND CONTROL FEATURES

Instrumentation automatically measures radioactivity levels and alerts building operators of abnormal conditions in the sample process system. Section 2.7 describes radiation/contamination and effluent monitoring instrumentation features. The controls used for managing the daily activities of the sample process system are contained and described in the following:

- Approved laboratory procedures
- Administrative regulations
- RCO surveys and audits
- TSR document (Ref. 12)

2.5.1.6 Operational Considerations and Safety

Manual L2-1 discusses operational considerations as they relate to the sampling process (Ref. 15).

According to the TSR document, operations in the Building 772-F and 772-1F process areas occur in one of two operational modes: Operation and Warm Standby (Ref. 12).

Operation mode is defined as the mode in which all applicable administrative controls have been met and the process area is capable of performing its intended function. Administrative controls apply to both modes of operation. Fissile material is authorized to be located in the process area, and material movement, sample preparation, and sample analysis are allowed during the Operation mode.

Warm Standby mode is identified as the mode in which the transfer or movement of radioactive and/or fissile material in the process area is not allowed, except as allowed by approved recovery plans. Radioactive and/or fissile material may be present within the process area.

The sample process systems in Buildings 772-F and 772-1F are designed to safeguard against a criticality as follows:

- By limiting the quantity and type of nuclear materials in each laboratory
- By preventing the carryover of fissile materials and other materials capable of sustaining a chain reaction from geometrically favorable portions of the facility to other areas conducive to a criticality
- By using confinement and personnel protective barriers

Process specifications and laboratory procedures apply the single-parameter, sub-critical mass limit for control of nuclear material, as required by American National Standards Institute (ANSI)/American Nuclear Society 8.1-1983, and incorporate margins to protect against uncertainties in process variables and against a limit being accidentally exceeded (Ref. 16). The very stringent single-parameter mass limit applied as a nuclear criticality safety control and the significantly more stringent nuclear material operating limits, combined with the types of activities performed in the facilities, ensure adequate safety margins.

2.5.2 OFF GAS EXHAUST SYSTEM

The discussion in this section applies to both Buildings 772-F and 772-1F unless otherwise noted. The OGE system is designed primarily to provide personnel safety and to preclude or minimize radioactive emissions to the environment. Air quantities and flow patterns are maintained to lessen the possibility of airborne radioactive contamination. Differential air pressure between the gloveboxes and the immediate laboratory environment causes air to flow from areas of lesser contamination potential to areas of greater contamination potential.

2.5.2.1 Functional Requirements and Flow Diagram

The function of the OGE system is to exhaust and filter air from the gloveboxes. Air from the immediate laboratory area is drawn through the glovebox containment enclosure and filtered to minimize the potential for onsite and offsite exposure during normal operation and accident

conditions. Figures 2.5-2 and 2.5-3 provide schematic diagrams of the OGE systems for Buildings 772-F and 772-1F, respectively.

2.5.2.2 Radiological and Chemical Inventories

The OGE system removes trace quantities of airborne radioactive material by collecting the material in the OGE HEPA filters. The filters are replaced periodically, in accordance with the filter maintenance and replacement program, with negligible amounts of radioactive material accumulation.

The F/H Lab is not a chemical production or processing facility. Small quantities of chemicals are used, and very small quantities (i.e., grams, milliliters) of byproducts are produced in the process of conducting laboratory analyses. An inventory of the chemicals typically used to conduct analytical operations and of those having special disposal requirements is provided in WSRC-TR-94-0114 and WSRC-TR-94-0115 for Buildings 772-F and 772-1F, respectively (Ref. 13, 14).

Since the OGE system provides a means of exhausting exhaust gases from the gloveboxes and does not produce or use chemicals for performing its function, no process chemicals are generated.

2.5.2.3 Major Components

The major components of the OGE system are the HEPA filters, exhaust fans (and motors), and associated headers and ducts.

OFF GAS EXHAUST HIGH EFFICIENCY PARTICULATE AIR FILTERS

In Building 772-F, non-leak testable HEPA filters are installed at the inlet and outlet of each glovebox. A bank of three double filter housings located in Shielded Area B also filters the air from the glovebox exhaust header. Each filter unit consists of two leak-testable HEPA filters. A butterfly valve is located at the top and bottom of each filter housing for isolating the filters when they are changed. A bag port for each filter is provided inside the opening cover for each filter. The HEPA filters are periodically checked for pressure drop in accordance with the applicable procedure contained in Manual L4.2 (Ref. 17).

In Building 772-1F, the gloveboxes are similarly equipped. Non-leak testable HEPA filters are installed at the inlet and outlet ports of each box. Exhaust air from the glovebox enters a header and passes through a prefilter and a leak-testable, single-stage HEPA filter located in the filter room on the suction side of the fan. A butterfly valve, used for isolating the filters when they are changed, is located at the top and bottom of each filter housing.

OFF GAS EXHAUST FANS

In Building 772-F, three OGE fans (each rated at 50% needed capacity) are located in the fan room on the service floor. Under normal operation, two fans operate continuously to maintain the required flow through the system. The third fan is on standby mode. Each fan is rated at about 1,250 cubic feet per minute (cfm) with a total exhaust capacity of approximately 2,500 cfm, and a vacuum of about 60 inches Water Gage (WG). Each fan is equipped with an electric operated damper on the discharge side of the fan.

In Building 772-1F, three fans (each rated at 50% needed capacity) are located in the filter room (Room 160) on the main floor. Each fan is equipped with an electric operated damper on the discharge side of the fans. Two fans operate continuously to maintain an approximate average flow of 750 cfm. One fan is on automatic standby.

In the event of a loss of normal power, the motors that operate the OGE fans are supplied with standby electrical power except for offgas fan #1 in Building 772-F which is supplied by normal electrical power.

OFF GAS EXHAUST HEADERS AND DUCTS

In Building 772-F, the offgas ducts consist of a service strip header behind the glovebox, several 6- and 8-inch stainless steel headers, and an underground line that runs between F-Canyon and 772-F.

In Building 772-1F, the offgas ducts consist of a service strip header behind the glovebox and stainless steel headers that discharge the air into the upstream side of the main exhaust HEPA filter.

2.5.2.4 Design Description and Basic Process Parameters

Air enters the glovebox through a HEPA-filtered opening, sweeps the glovebox, and is filtered by a small non-leak testable HEPA filter prior to entering the service strip header that runs into each laboratory module. Each unit has quick disconnect fittings or is hard-piped with a manually controlled butterfly valve. From the back of the box, air enters the service strip header in each laboratory module.

In Building 772-F, the service strip headers drop down to the service floor and connect to four 6-inch stainless steel headers running north and south on both sides of the center portion of the service floor. These branch headers are connected to an 8-inch stainless steel header at Column Line 38.

The header runs to a filter bank consisting of three sets of double filters located in Shielded Area B. Each filter unit consists of two leak-testable HEPA filters. After the filter bank, the 8-inch header runs through a covered trench on the east side of the service floor to the lower level of the fan room. In this room, the air passes through two of three high-speed fans located in the southwest corner. Air is discharged from the fans into a stainless steel line which runs into

the Main Exhaust system. The underground line to F-Canyon which used to discharge into the Warm Canyon is isolated in the fan room. The exhaust air from the exit port of the glovebox is effectively drawn through one HEPA filter at the glovebox, two leak-testable HEPA filters in the OGE system, and HEPA filters in 772-4F before being released to the environment.

An OGE emergency bypass system that originally redirected exhaust to the Building 772-F stack upon a loss of F-Canyon exhaust was deactivated by air gapping the exhaust line to F-Canyon and replacing the actuator on the bypass damper with a manual damper handle that is left in the open position directing flow to 772-4F.

The OGE system in Building 772-1F is similar to the system in Building 772-F with the exhaust air discharged to the main exhaust system. The air from the exit port of the glovebox is effectively drawn through one HEPA filter at the glovebox, and a prefilter and one leak-testable HEPA filter in the OGE system, plus one prefilter and two more leak-testable HEPA filters in the main exhaust system before being released to the environment.

2.5.2.5 Instrumentation and Control Systems

FUNCTIONAL REQUIREMENTS

The instrumentation installed in the OGE system provides continuous sensing of system pressure, an automatic actuation of the standby fan in the event of failure of either of the online fans. OGE system instrumentation provides an indication of the pressure drop across the HEPA filters.

INSTRUMENTATION AND CONTROL FEATURES

In Building 772-F, the third (standby) OGE fan automatically starts up in the event of a vacuum loss. A vacuum alarm is located on the service floor in front of the building services panel board. The remote panel in 772-F room 156 was removed from service.

In Building 772-1F, the third (standby) OGE fan starts up automatically in the event of a vacuum loss. The fans have instrumentation similar to that of the main exhaust system fan. Locally mounted instruments also provide glovebox-to-room pressure differential, and a gage across the exhaust filter is used to monitor HEPA filter differential pressure. A remote alarm for the OGE system fans is located in the CR (Room 146).

OPERATING CHARACTERISTICS

In Building 772-F, normal operation is established with two manually operated high-speed fans that deliver approximately 2,500 cfm of exhaust air. If either online fan fails, the other fan is automatically restarted and the controls are reset.

In Building 772-1F, normal operation is established with two manually operated fans that deliver approximately 750 cfm maximum flow. Exhaust manifolds for gloveboxes are designed to comply with the Nuclear Air Cleaning Handbook (Ref. 18). Failure of either online manual fan will cause the spare fan to start automatically. During loss of normal power, the motors supplied with standby electrical power for Building 772-F and Building 772-1F listed in Table 2.8.2 operate the OGE fans.

SAFETY CRITERIA AND ASSURANCE

The OGE system is not a Safety Class SSC and is not required to achieve safe shutdown or to mitigate the consequences of an abnormal condition. The OGE system is a passive Safety Significant system because the containment functions of some of the passive components of the OGE system are Safety Significant, as described in Chapter 4. The instrumentation for the OGE system is not Safety Significant.

2.5.2.6 Operational Considerations and Safety

The OGE system in both Buildings 772-F and 772-1F is not a Safety Class SSC and is not required to achieve safe shutdown or to mitigate the consequences of an abnormal condition. Because the OGE system is a passive Safety Significant system, abnormal conditions, such as failure of the exhaust fans and loss of normal and standby electrical power, pose no hazard to the facility workers, although the facility workers would discontinue normal operations and leave the laboratories. Moreover, because the OGE system is a passive Safety Significant system, abnormal operations would have no impact on onsite personnel outside the facility or on environmental safety relative to the release of radioactive materials and hazardous chemicals.

In Building 772-1F, the OGE system is connected to the main exhaust system. The main exhaust systems in the F/H Lab is not required to achieve a safe shutdown of the facility.

2.5.3 HIGH- AND LOW-ACTIVITY DRAIN SYSTEMS

2.5.3.1 Functional Requirements and Flow Diagram

The function of the HAD and LAD systems is to provide a means of collecting and temporarily storing radioactive liquid materials produced by analytical, laboratory, and ancillary processes. The HAD and LAD systems also provide a means of transferring the liquid materials to other facilities for recovery and disposal. Figure 2.5-4 provides a schematic diagram of the LAD system.

2.5.3.2 Radiological and Chemical Inventories

The F/H Lab is not a chemical production or processing facility. Small quantities of radiological samples and chemicals are used, and very small quantities of byproducts are produced in the

process of conducting laboratory analyses. WSRC-TR-94-0114 and WSRC-TR-94-0115 provide the radiological and chemical inventories typically found in Buildings 772-F and 772-1F, respectively (Ref. 13, 14). The drain systems do not produce or use chemicals to perform their functions; therefore, no process chemicals are generated.

2.5.3.3 Major Components

The major components of the HAD and LAD systems are as follows:

- Drain collection headers
- Transfer tanks
- Transfer steam eductors (LAD only)
- Transfer pumps
- Exhaust systems
- Associated piping, valves, and instrumentation
- Interfacing steam and compressed air systems

These components are discussed in the following sections.

2.5.3.4 Design Description and Basic Process Parameters

HIGH-ACTIVITY DRAIN SYSTEM

The HAD system consists of the following:

- Several drain headers
- High-activity Transfer Tank F
- Automatic flushing devices - inoperable
- Transfer valves
- Valve interlocks

High-activity liquids, consisting of process samples, dilutions, and chemical solutions used in analytical methods, are collected in the transfer tank prior to transfer to H Area. The sources of these liquids are the shielded cells, and containment enclosure cup sink drains. Since the cupsinks are all inside the containment units, no significant amount of sprinkler water is expected to be collected here in case of a fire.

Two High-activity transfer tanks (Tanks C and D) were formerly used to collect laboratory discharges but have been removed from service and physically isolated from the operational HAD system by air gaps and blanks on the drain inlet headers.

(Note: The Decontamination Room hood sink drain and floor drains are no longer in service and abandoned in place. Shielded Area A Sump transfer ejector and control system are also out of service.)

In Buildings 772-F and 772-1F, the liquid from the cells and cup sinks flows by gravity into a header that traverses the buildings and terminates at Tank F.

In Building 772-F, two drain headers, with secondary jackets and leak detection, run from the north and south ends between column lines F and G toward the center of the building.

Tanks C and D are located in a shielded enclosure below ground level near the northeast corner of Building 772-F. The transfer tank enclosures are 11 feet by 10 feet by 23 feet 7 inches deep. Each tank has an approximate volume of 1,255 gallons. These tanks are out of service.

Tank F is located on the Service floor of 772-F in a dedicated room. The tank has a capacity of 600 gallons. The tank is supplied with the following support systems:

- An overflow pipe that discharges to a vented drum
- An electrically operated centrifigul pump to transfer the Tank F contents to an appropriate shipping cask.
- A liquid level indicator
- Annular space on the tank with leak detection
- Passive vents

LOW-ACTIVITY DRAIN SYSTEM

The LAD system collects liquids from the following locations:

- Laboratory sinks in the inner laboratory modules (i.e., laboratories not adjacent to the outer building walls)
- Laboratory sinks and hoods in the outer laboratory modules (i.e., laboratories adjacent to the outer building walls which contain clean or low activity hoods)
- Laboratory floor drains
- Decontamination sink drains
- Eyewash stations

The liquid is collected in transfer tanks A and B prior to being transferred to the Effluent Treatment Project processing and disposal. Low-activity liquids contain low or trace amounts of radioactivity.

Drop lines from the locations mentioned in the previous paragraph tie into one of two drain headers on the service floor that run from the north and south ends of the building between column lines F and G toward the center of the building. Each drop line is equipped with a trap

prior to entering the header with the exhaust to the system bypassing the trap. The headers join near column line 39 and run through a covered trench from Shielded Area A to the subfloor of the filter room. Here the header branches and liquid is directed to either transfer tank A or B using remotely operated flow control valves. The transfer valves are similar to those used for the HAD system and are operated in the same manner. The drain header from Building 772-1F drains to Tank B only and does not include a flow control valve.

Low-activity radioactive liquid drains into one of the two transfer tanks located in the shielded underground cells near the northeast corner of Building 772-F. Each tank has an approximate volume of 3,000 gallons. The enclosures are 13 feet by 12 feet by 28 feet 7 inches deep and could hold approximately 30,000 additional gallons of water (total system volume of 66,000 gallons). An electrically operated centrifugal transfer pump is used to transfer LAD Tank B contents to the Effluent Treatment Project via underground process sewer system header. Prior to each transfer, LAD Tank B contents are sampled to ensure compliance with Effluent Treatment Facility Waste Acceptance Criteria.

The sumps in the transfer tank enclosures (Tank A and Tank B) are emptied directly into the transfer tanks by steam ejectors. These liquids contain moderate amounts of radioactivity.

A sump and steam ejectors are located in the northeast corner of each tank cell. The sump to Tank B serves the subfloor of the filter room in addition to the tank cell. The tanks are supplied with support systems (e.g., overflow system, steam ejectors).

Many of the renovated laboratory modules include floor drains. The LAD tanks do have some connections to laboratory floor drains; however, these have been covered. If the sprinkler system is triggered, the sprinkler water would collect in the labs, on the main floor, or on the service floor where it would have to be sampled for cleanup. Even if sprinkler water did reach the tanks, the radioactive content of the LAD tanks is negligible.

TRANSFER TANK SUMPS

Leaks from any of the tanks and rainwater inleakage are collected in a sump located in the northeast corner (low point) of each of the four tank enclosures. The sump located in the LAD system transfer tank B enclosure also collects liquids from the filter room subfloor piping and valves. The contents of each sump (A and B) are jetted to each respective tank by steam siphon ejectors. Each of the four sumps is lined with stainless steel and measures 2 feet by 2 feet by 1 foot.

2.5.3.5 Instrumentation and Control Systems

FUNCTIONAL REQUIREMENTS

Instrumentation installed in the transfer tank systems primarily provides continuous sensing of the liquid level in the transfer tanks and alerts facility operators, by way of alarms at the building services panel board, whenever operational setpoints are exceeded. The instrumentation

provides the operators with the means of remotely controlling routine system operations, such as transferring liquid from the sumps to the tanks, between tanks, and from the tanks to other facilities for routine processing.

INSTRUMENTATION AND CONTROL FEATURES

High-Activity Drain System

The HAD system header lines are equipped with automatic flushing devices that can be set to flush the lines as often as needed to rinse the lines of residual radioactivity and corrosive liquids. A flush consists of approximately 15 gallons of process water from each flush tank at the end of the header. The automatic flush systems are inoperable at this time.

A liquid level indicator is provided for Tank F. The indicator is interlocked with alarms at the panel board and in the CR (Room 146) in Building 772-1F.

Low-Activity Drain System

The LAD transfer tanks are supplied with instrumentation and control systems (e.g., flow control valves, level indicators and alarms).

Transfer Tank Sumps

If the liquid in the transfer tank sump reaches a preset level, an alarm and light indicate this condition on the panel board. Repeated alarms of excessive liquid levels in any one tank cell could indicate a leak in the transfer tank or its associated piping. The steam ejector for each sump (A & B) can be remotely operated from the panel board.

OPERATING CHARACTERISTICS

High- and Low-Activity Drain Systems

HAD and LAD liquids flow by gravity and are drained into a header that terminates at the HAD and LAD transfer tanks. The tanks are emptied by remote control using the steam ejectors (inter-tank and sump) and electrical transfer pumps.

Shielded Area A Sump Drain (Building 772-F)

The steam ejector can be operated manually with controls mounted on the south wall of the decontamination room.

Transfer Tank Sumps

The steam siphon ejectors are remotely operated from the building services panel board. These ejectors are operated, as required, under normal conditions to prevent sump overflow.

SAFETY CRITERIA AND ASSURANCE

Instrumentation for the HAD and LAD systems is not designated as a Safety Class or Safety Significant SSC. Although not required to achieve a safe shutdown, certain mitigative functions after a shutdown represent major contributions to defense in depth (i.e., prevention of uncontrolled material releases) and/or worker safety.

The transfer tank system is not equipped with instrumentation dedicated for monitoring the accumulation of explosive gases. However, a buildup of explosive gases in the drain lines and inside the transfer tanks is precluded by natural venting of lighter-than-air gases by way of the containment unit cup sinks and the tank overflow piping during loss of forced ventilation. In addition, there are no ignition sources inside the drain system or the transfer tanks (only steam and air are used). To reduce the risks associated with handling chemicals and radioactive samples, the HAD and LAD exhaust fans must be in service during normal facility operation.

Loss of the transfer system instrumentation may require shutdown of the HAD and LAD systems for the purposes of worker safety. However, instrument failures would not, by themselves, result in radiological or hazardous chemical releases.

2.5.3.6 Operational Considerations and Safety

Laboratory procedures contained in Manuals L2-1 and L4.2 provide the operating parameters and system limitations, process controls, and equipment lineup and operating requirements during normal and abnormal conditions (Ref. 15, 17).

The HAD and LAD systems are not required to achieve and maintain safe shutdown of laboratory operations during and after an abnormal event. The maximum permissible quantity of fissile material, within a given area that is used for analysis and in laboratory processes, limits the generation of liquid effluent within the F/H Lab. This limitation, coupled with design and administrative controls, ensures criticality safety and minimizes the potential for exceeding specified DOE requirements regarding environmental releases.

Furthermore, in the event of an abnormal event, cessation of liquid disposal operations within the facility would not present a safety hazard to personnel or equipment.

Employees are protected from hazardous materials within the facility through design features and the As Low As Reasonably Achievable (ALARA) concept. This protection is accomplished through the use of underground transfer tanks and remote handling operations for transferring liquids to and from the tanks. The confinement barrier of the waste containment and disposal system provides the appropriate shielding necessary to minimize personnel exposure in keeping with the ALARA concept.

The release of hazardous liquids during normal operation and anticipated operational occurrences is limited by the following:

- System confinement design features
- Activity levels permissible for temporary storage
- Size of storage receptacles
- Size and use of designated areas for permissible temporary storage

The maximum capacity of each LAD transfer tank is approximately 3,000 gallons (not including the concrete underground enclosures). An alarm system alerts the operators whenever the tanks reach preset limits. The second low-activity transfer tank can be used as a backup unit to permit uninterrupted operations during maintenance of the other tank.

In the event of an abnormal condition occurring when one low-activity transfer tank is filled to preset limits, the alternate tank is available to accommodate the drainage of liquids from the laboratory and decontamination sink drains. Therefore, sufficient tank volume is available during accident conditions to secure all transitory liquid effluents during peak operating conditions when all laboratory units are concurrently in service.

The design of all process equipment shall include features to minimize self-contamination of the equipment, piping, and confinement areas. This goal is accomplished by periodic flushing of the drain header lines to rinse the lines of residual radioactivity and corrosive liquids.

The maximum capacity of the operational HAD Tank (Tank F) is 600 gallons. An alarm system alerts the operators whenever the tank reaches a preset limit. The HAD Tank F is supplied with an overflow drum with a capacity of 15 gallons. The HAD Tank F does not have a backup tank.

The design of the HAD and LAD systems minimizes the mixing of radioactive and nonradioactive effluents. Spill prevention and control were considered in the design stage of the facility to minimize the possibility of accidentally releasing hazardous wastes to the environment. This goal is accomplished through the use of cup sink drains inside confinement enclosures, laboratory, and decontamination sink drains, and floor drains.

2.6 CONFINEMENT SYSTEMS

2.6.1 BUILDING VENTILATION SYSTEMS

2.6.1.1 Design Basis and Performance Requirements

The ventilation systems in Buildings 772-F and 772-1F are not designated as Safety Class SSCs, although the containment functions of some of the passive components of the 772-F main exhaust system, and the OGE system are Safety Significant as described in Chapter 4. Both the main exhaust system and the OGE system meet the guidelines for non-Safety Class ventilation systems described in Section 5.5 of DOE/TIC-11603 (Ref. 20). The ventilation systems are designed primarily for worker safety and comfort. Air quantities and flow patterns are maintained to lessen the possibility of airborne radioactive contamination. Differential air pressure between different sections within each of the buildings causes air to flow from areas of lesser contamination potential to areas of greater contamination potential. The ventilation systems are composed of the supply air and main exhaust systems.

The function of the supply air systems is to draw outside air into the buildings and discharge it into the facility distribution system. All incoming air (fresh air supply) is prefiltered, treated for personnel comfort (e.g., heating, cooling, humidity), and directed to different sections of the buildings. Supply air is filtered to help reduce dust loading of exhaust prefilters and HEPA filters. All supply units have prefilters and final filters (bag or cartridge). The prefilters are changed as needed, and the final filters are changed when the differential pressure across the filter exceeds a predetermined setpoint.

The function of the main exhaust systems is to exhaust all building areas to the outside environment while minimizing the potential of radioactive releases and subsequent onsite and offsite exposure during normal operation and abnormal conditions. The main exhaust systems filter air primarily from all radiological areas, radiohoods and radiobenches, gloveboxes, waste handling systems, and the RCO sampling systems.

In Building 772-F, air is exhausted from the main floor, laboratory modules, and radiological areas following separate pathways to the main exhaust filters in Building 772-4F. A portion of the exhaust air flows through the containment units, maintaining a negative pressure inside radiohoods and radiobenches. Air exhausted from Shielded Area “A” of the Building 772-F service floor is filtered by single-stage HEPA filters in Building 772-F and dual-stage HEPA filters in Building 772-4F, but the service floor exhaust system in Building 772-4F has only a single stage of HEPA filtration. The OGE air from the gloveboxes is filtered by two stages of particle-efficiency-testable HEPA filtration and is discharged to the Main Exhaust System.

All exhaust filters in Buildings 772-1F and 772-F/772-4F are contained in filter housings. These housings hold a prefilter (dust-stop prefilters in Building 772-F) and one or two stages of HEPA filters, depending upon the system.

Each housing has a common differential pressure gage across each stage of filtration. This differential pressure gage is used to determine the dust loading of the filters. The filters are changed when the filter differential pressure rises above a limit established by procedure. Each set of HEPA filters is leak-tested annually to verify efficiency. Individual HEPA filters are required to exhibit an efficiency of 99.97% as determined by filter tests conducted during operation. (This is an outside limit for retest and/or replacement purposes. Actual testing procedures may require a more stringent limit.)

To keep the buildings under negative differential pressure, the total air supply is maintained less than the total exhaust under normal operating conditions. The total air supply to Building 772-F is approximately 132,000 cfm, and the total exhaust is approximately 148,000 cfm. For Building 772-1F, the total air supply is approximately 69,000 cfm, and the total exhaust is approximately 70,000 cfm.

2.6.1.2 Major Components and Operating Characteristics

BUILDING 772-F

Air Supply System

The major components of the air supply system are the AHUs, which include the supply fans and motors, filters, and distribution network (plenums and associated ducts). Air is drawn into the building through six AHUs located on the roof. The air is filtered (preheated in winter) and sent over a chilled water coil for humidity control. The air is then reheated to the desired temperature, steam-humidified for humidity control, discharged to the main supply plenums, and distributed by way of the associated ducts.

Air Exhaust Systems

Main Exhaust System

The major components of the main exhaust system are the main exhaust fans and associated motors, the HEPA filters, and the main exhaust network (i.e., the main exhaust tunnel, the exhaust stack, and the associated ventilation ducts, plenums, and headers). Figure 2.6-1 illustrates the exhaust flow path for Buildings 772-F and 772-4F. The following paragraphs provide a narrative description of this figure and how the system operates.

The main exhaust system provides exhaust air flow for the following:

- Radiohoods
- Radiobenches
- Shielded Areas A, B and C

- Shielded Cells
- Fan room
- Transfer tank cells of Building 772-F

The air flow is sufficient to enable the building to be maintained at a negative pressure and to provide the exhaust air filtering capacity necessary to ensure that the radioactive material content of all exhaust air released to the atmosphere through the main exhaust stack is acceptable.

The AHUs and the main exhaust system work together to provide the required air changes and pressure distributions for building operation. Supply air is distributed through galvanized ducts on the service floor and in overhead areas above the offices, service floor, corridors, and radiologically controlled laboratory modules.

Air is exhausted through radiohoods, radiobenches, and exhaust intakes in the laboratory modules into circular stainless steel ducts in the overhead section of the service floor. Air flows from the circular ducts into a large rectangular duct called the “dirty” plenum. Some of the circular ducts have a condensate drain that drains into a tunnel trap mounted on the center column lines on the service floor.

Air entering the stainless steel “dirty” plenum flows through multiple parallel filter sections. The filter sections located on the service floor consist of a prefilter and a single stage of HEPA filters. Each HEPA filter housing has provisions for leak testing to measure leakage or bypass of the filters.

Air then enters a stainless steel “clean” plenum where it flows to the main exhaust concrete plenum running north to south along the center of the building. This plenum connects to an east-to-west plenum that is connected to the new concrete vault located south of the sample tunnel by the old stack. The old stack is capped on top and is open to the concrete vault below. It is considered part of the system boundary for the ME System. A stainless steel duct connects the concrete vault with the main exhaust system of Building 772-4F.

The main exhaust system also draws room exhaust air from the Building 772-F fan room, transfer tank cells, shielded cells, and the shielded areas. The exhaust from the fan room and transfer tank cells is drawn from intakes in the four tank cells. Air flows from the fan room into the tank cells through two openings in the north wall of the fan room. The air from the transfer tank cells passes through two sets of stainless steel ducts to HEPA filter housings located on the mezzanine level of the fan room. The air is then discharged into the main exhaust concrete plenum.

The shielded areas are exhausted by four sets of exhaust ducts located in Shielded Area A. The exhaust duct penetrates the east wall of the shielded area between Shielded Areas B and C. HEPA filter housings are located in Shielded Area A to filter this exhaust air. The filtered air is then discharged into the main exhaust concrete plenum.

On the northeast corner of the concrete plenum stands a section of duct that was constructed as part of the Temporary Emergency Exhaust Treatment (TEXT) System. It is located immediately to the west of the old concrete stack. This duct from where it ties into the concrete plenum up to

the stainless steel blind flange about 10 feet above the ground is still considered part of the system boundary for the ME system. It is constructed of galvanized steel and measures 87 inches by 87 inches at its base. It narrows to 33 inches by 33 inches at the top of the closed isolation damper.

Exhausts from change rooms, restrooms 142 and 144, and the service floor, which were previously exhausted to the roof of the building, have been redirected to the HEPA filters in Building 772-4F.

Building 772-4F houses the new filtration system used to upgrade the old main exhaust system in Building 772-F. This new filtration building increases the number of stages of HEPA filtration, meets current industry standards, and eliminates the potential for particulate releases from the old stack and ductwork.

A stainless steel duct enters Building 772-4F through the north wall and extends the length of the building. Five HEPA filter banks mounted on the floor of Building 772-4F filter the air from the overhead duct.

The overhead duct to the filters has inlet and outlet manual isolation dampers and a manual balancing damper on the discharge side. A differential pressure gage is provided across each filter stage to check for dust loading. The housings are equipped with the necessary connections and internal mixing baffles to perform in-place leak testing across each HEPA filter.

The filtered discharge air from each of the HEPA filter housings enters a duct that is connected to the four main exhaust fans located on the floor of Building 772-4F.

The four main exhaust fans are centrifugal fans with variable inlet vanes, automatic discharge dampers, and manual suction and discharge isolation dampers. The discharge dampers are interlocked with the fans to open upon operation of the fans and to close when the fans stop to prevent “windmilling” (reverse rotation). The discharge dampers will fail in the “as-is” position upon a loss of normal power or instrument air. The variable inlet guide vanes are used to maintain constant air flow. The flow controller will open the inlet vanes when the flow needs to be increased or will close them when the flow needs to be decreased. The manual isolation dampers allow the fans to be isolated from the air stream during maintenance.

The controls for the main exhaust system maintain a constant volume of air flow. A velocity probe located in the concrete plenum on the service floor is used to determine the velocity of the air. This probe is attached to a transmitter located in Building 772-4F. This system adjusts the inlet vanes on the main exhaust fan to obtain the desired flow rate.

Another large-diameter duct is located directly above the row of main exhaust fans and is the exhaust duct that leads to the stack. This duct connects the service floor exhaust system at the north end of the building with the main exhaust fan's discharge ducts. The duct runs through the south wall out of the building to connect to the exhaust stack.

The exhaust stack located immediately south of Building 772-4F is 190 feet high. The initial diameter of the stack at grade level is 16 feet, and it reduces to 10 feet at an elevation of 18 feet

and finally to 7 feet at an elevation of 78 feet. The main exhaust duct enters the stack approximately 25 feet above grade.

The controls for the main exhaust fans and AHUs are located on the control panel on the east side of Building 772-4F. The normal control positions of the main exhaust fans and the AHUs are as follows:

- Three main exhaust fans operating with their selector switches in the “hand” position
- One main exhaust fan on standby with its selector switch in the “auto” position
- Six AHUs operating
- Service floor exhaust fan operating

System pressure is monitored for indication of a pressure buildup. The standby fan will automatically start when the vacuum in the concrete vault drops below the setpoint of two pressure switches.

Off Gas Exhaust System

Section 2.5.2 describes the OGE system.

Change Room Exhaust

The air in the change rooms, which was previously exhausted to the roof of the building without filtering, has been redirected to the HEPA filters in Building 772-4F and exhausted through the Building 772-4F stack by way of the service floor exhaust system.

Service Floor Exhaust

Service floor air, which was previously exhausted to the roof of the building without filtering, has been redirected to the HEPA filters in Building 772-4F.

The high contamination areas in Shielded Areas A, B, and C are also exhausted by the Building 772-4F fans. Shielded Area B exhausts by way of a doorway into Shielded Area A, while Shielded Area C exhausts into Shielded Area A by way of a wall grill. The Shielded Area A exhaust air is filtered by four banks of HEPA filters with three filters in each bank. Each filter has manual dampers and a differential pressure gage to indicate filter pluggage. Ducts connect the filter banks to the new concrete vault and Building 772-4F. Air-controlled louvers in the north end of the shielded area keep Shielded Area A at a negative pressure with respect to the laboratory modules.

A backup system for Shielded Area A is provided. When the exhaust pressure from Shielded Area A is low, air-operated controls close the static damper louvers at the north end of the area and open two static dampers to two main exhaust filter housings located in the northwest corner of the area. This system provides approximately 2,000 cfm of exhaust to the shielded areas.

(The shielded areas should be entered only in emergency situations when the backup system is in service.) Controls for the exhaust system in the shielded areas are located at the building services panel board and at the northeast outside corner of Shielded Area A.

The remainder of the service floor, the change rooms, and restrooms 142 and 144 are HEPA-filtered and exhausted by the service floor exhaust fan located in Building 772-4F.

The service floor exhaust fan has a variable inlet vane damper, automatic discharge damper, and manual suction and discharge isolation dampers. The discharge damper is interlocked with the fan to open when the fan is started and to close when the fan is stopped to prevent "windmilling" (reverse rotation) of the fan. The discharge damper on the service floor is air-operated and will fail in the closed position upon loss of instrument air or normal power.

The variable inlet vane damper is continuously adjusted to maintain a constant differential pressure between Building 772-4F and the inlet plenum. Once the air is discharged from the fan, it enters the main exhaust duct where it is exhausted through the stack.

Upon a loss of the service floor exhaust fan (i.e., blown fuse or overload trip), a pressure switch opens causing a low negative pressure alarm in the CR.

High-Level Drain Exhaust System

The HAD system is exhausted by one of two High-Level Drain Exhaust (HLDE) system exhaust fans located in the fan room. These fans exhaust air at a rate of approximately 160 cfm with about an 18-inch water vacuum to preclude backflow of contaminants into the laboratory. The exhaust in the HLDE system transfer tanks provides a complete air changeout approximately every 9 minutes, or about 6 times per hour. This exhaust rate is intended for worker safety by preventing radioactive or other hazardous gases from backing up into the laboratory modules during normal operation. The exhaust passes through a demister, the online prefilter and particle-efficiency-testable HEPA filter located in the filter rooms, and a HEPA afterfilter located in the fan room. Only one prefilter and HEPA filter are on line with the second set on standby mode. The standby HLDE system fan is automatically started upon failure of the online fan.

System pressure is monitored on the HLDE header for indications of low pressure. Pressure decreasing below the setpoint causes an alarm in the CR.

Low-Level Drain Exhaust System

The stainless steel sink drain piping and LAD system that serve laboratories handling low-activity radioactive and corrosive materials are exhausted by the Low-Level Drain Exhaust (LLDE) system. Each gravity-flow sink drain pipe is connected to an exhaust header that runs the length of the building. The exhaust air passes through a prefilter and a particle-efficiency-testable HEPA filter before entering one of two 160-cfm (design capacity) exhaust fans located in the fan room. One fan is on line and one is on standby. The standby LLDE system fan is automatically started upon failure of the online fan. System pressure is monitored on the LLDE

header for indications of low pressure. Pressure decreasing below the setpoint causes an alarm in the CR.

Radiological Control Operations Air Monitoring Exhaust

This system provides exhaust for sampling the atmosphere in all radiological areas (i.e., radiological buffer area, contamination area, airborne radiological area, etc., such as laboratories and corridors where radioactive material is handled) and exhaust ducts. The system consists of three fans located in the fan room. Each fan provides approximately 600 cfm exhaust air. The possible fan configurations are 1) a minimum of one fan operating and none in standby, 2) A minimum of one fan in operation and one in automatic or manual standby (preferred) or 3) two fans in operation and one in off/manual or automatic standby. The fans are protected by a single stage of particle-efficiency-testable HEPA filters. The header pressure is continuously recorded. A fan failure causes visible and audible alarms at the building services panel board and in the RCO office. The system discharges to Building 772-4F.

Ventilation Fans

There are two ventilation fans for the mechanical equipment building in Building 772-F. These fans are located on the roof. Each of the ventilation fans discharges at a rate of approximately 20,000 cfm.

BUILDING 772-1F

Air Supply System

With the exception of the electrical CR and mechanical rooms, Building 772-1F is supplied with heated and conditioned air using two factory-assembled air units that draw outside air into the system and discharge it into the building distribution system. The air supply system consists primarily of the laboratory supply unit and the radiohood supply unit. The electrical CR and mechanical rooms have independent air supply systems.

Laboratory Supply Unit

This unit, located on the northeast portion of the roof, provides approximately 32,000 cfm of conditioned air to the office, corridor, and laboratory outlets. This unit includes a steam preheat coil, roughing filters, a steam humidifier, chiller water cooling coils, and a supply fan. Additional chilled water coils are installed in the branch of the duct that supplies the counting rooms for the additional cooling needed in those areas.

A steam-heated hot water system is included to maintain the desired temperature in the various zones.

Radiohood Supply Unit

This unit, located on the southeast portion of the roof, provides approximately 37,000 cfm of conditioned air to additional laboratory outlets. This unit includes a steam preheat and reheat coil, a steam humidifier, roughing filters, a chilled water coil, and a supply fan.

Other Areas

The restrooms and janitors' closets are ventilated by connecting these areas directly to the general laboratory exhaust system. The flow of air through these areas is exhausted at a rate of about 2 cubic feet per minute per square foot of floor area. The mechanical rooms are ventilated by drawing outside air through louvers on the second floor with two 5,000-cfm units in each mechanical room. The mechanical rooms are heated with two hot water unit heaters per room.

Air Exhaust Systems

The total building exhaust (excluding the two mechanical equipment rooms, 103 and 201; the electrical equipment room, 102; and the fan room, 161) is handled by the main exhaust system, which includes a 135-foot exhaust stack, as shown in Figure 2.6-2. Systems serving specific equipment or subsystems exhaust into the building exhaust system. These systems gather air from radiohoods, radiobenches, gloveboxes, the HAD and LAD systems, the shielded cells, and the RCO air monitoring system and discharge it into the main exhaust system.

Main Exhaust System

The main exhaust system is designed to draw air from radiohoods and radiobenches. Glovebox and Cell air flows reach the Main Exhaust via the OGE and Cell Exhaust. Exhaust connections to the hoods are made at the top of the hoods. Each hood has a manual damper in the exhaust duct accessible from the laboratory and an automatic damper above the ceiling.

Three airfoil centrifugal fans are provided, each sized to supply half the full system capacity (approximately 72,000 cfm). Normal equipment lineup is established with two fans in operation. The third (standby) fan is activated automatically should either of the two operating fans cease to operate. Each fan is equipped with a flow control instrument package that activates variable inlet vanes to maintain constant-pressure exhaust upstream of the exhaust filters. In addition, standby electrical power is supplied to the fan motors.

The fan and damper assembly are instrumented to show the status of the fans. Displays and alarms are provided on the CR control panel. A laboratory low-pressure alarm is activated by pressure switches that sense the exhaust pressure. An alarm is annunciated on the CR alarm panel if the laboratory exhaust falls below the minimum required to operate in the laboratory modules. This alarm can be caused by a main exhaust or flow control problem. The standby fan starts automatically on loss of pressure.

The exhaust air is filtered by a leak-testable, two-stage HEPA filter system arranged in series with one stage of prefilters. The filter housings are factory-assembled and include the following:

- Two stages of a three-by-four arrangement of HEPA filters in series
- Prefilters
- In-place particle-efficiency test connections
- Bagout capabilities
- Inlet and outlet dampers

Each filter measures 24 inches by 24 inches by 12 inches thick and is rated at nominally 1,000 cfm at a pressure drop of 1 inch WG. The filter housing is constructed of welded stainless steel. Five units in parallel are required to handle the approximately 72,000 cfm of air discharged into the atmosphere, after filtering, by way of the 135-foot stack.

Off Gas Exhaust System

This system exhausts the air from the gloveboxes. Section 2.5.2 describes the OGE system in Building 772-1F.

High- and Low-Level Drain Exhaust Systems

Each source of a HAD or LAD is connected by a drop line to the respective drain header, which is vented by a connection routed to the filter room. Exhaust is provided by two fans, each sized to provide 100% of the design flow of about 300 cfm. One fan operates continuously while the other is on standby. If one fan fails, the standby fan is automatically started. The system is supplied with standby electrical power. A leak-testable, single-stage HEPA filter, with a prefilter moisture separator located on the suction side of the fans, partially cleans the air before it is discharged to the main exhaust system upstream of the HEPA filters.

Shielded Cell Exhaust

About 2,000 cfm of air is exhausted from the shielded cells by one of two 100%-capacity fans. The air passes through one stage of prefilters in series with one stage of testable HEPA filters. The fans discharge into the main exhaust system where the air is filtered prior to being discharged through the stack.

Radiological Control Operations Air Monitoring

Air from the RCO air monitoring system is drawn through one prefilter and one stage of HEPA filters by two exhaust fans (one on standby) and is exhausted to the main exhaust filter plenum. The operating exhaust fan is rotated according to a predetermined schedule.

Mechanical, Electrical, and Fan Room Ventilation

There are four rooms in Building 772-1F which are ventilated with unfiltered outside air. They are the following: the two mechanical equipment rooms, (Rooms 103 and 201), the electrical equipment room, (Room 102), and the fan room, (Room 161). The equipment located in these rooms require complete air changes at specific time intervals for cooling purposes.

The mechanical rooms on the first and second floors are ventilated by fans drawing outside air through louvers and exhausting the air on the roof. Three fans serve the mechanical room on the first floor (Room 103), and one fan serves the mechanical room on the second floor (Room 201). The electrical equipment room (Room 102) and the fan room for the main exhaust system fans (Room 161) are ventilated in a similar manner by a single fan in each room.

BUILDING 772-4F

Building 772-4F is connected to the existing Building 772-F ventilation system at the stack exhaust tunnel. The facility consists of two stages of HEPA filtration, exhaust fans, and a 190-foot stack, which is located between Building 772-F and F-Canyon.

The four main exhaust fans previously located in the fan room of Building 772-F have been removed. The four new exhaust fans in Building 772-4F provide all of the required exhaust capacity, except for the exhaust from the change rooms, restrooms 142 and 144, and the service floor. These rooms have an independent exhaust fan that discharges to the Building 772-4F stack. The Main Exhaust system operates with three fans running and one on standby. Two of the exhaust fans are wired (mutually exclusive) on standby electrical power so that, upon a loss of normal power, one fan will automatically start to maintain facility at a negative pressure to the outside.

Building 772-4F is designed to provide approximately 170,000 cfm of HEPA-filtered exhaust capacity. Exhaust air that previously went out the Building 772-F stack is directed to Building 772-4F. In addition, exhaust air from the Building 772-F change rooms, restrooms 142 and 144, and the service floor that was previously discharged as unfiltered air through the roof has been redirected to Building 772-4F by use of the service floor exhaust fan. The air monitoring system also discharges to Building 772-4F.

Building 772-4F is exhausted by two ventilation fans located on the west wall of the building. Exhaust dampers are attached to the intake side of the fan housing. The three building intake housings and motor-operated dampers allow filtered outside air to be drawn into the main floor area and the northern mezzanine.

The electrical equipment room fan provides cooling to the room. The fan is located on the mezzanine level above the electrical equipment room. The fan is rated at approximately 1,200 cfm. The intake housing for the electrical equipment room is a fixed louver type providing filtered outside air.

2.6.1.3 Safety Considerations and Controls

The ventilation systems and the associated instrumentation and controls in the F/H Lab are not considered to be Safety Class items and are not required to achieve safe shutdown. Nonetheless, selected instrumentation and controls are supplied with standby electrical power to increase worker safety and contamination control.

A partial loss of ventilation equipment and instrumentation and control features in the F/H Lab does not necessarily require the shutdown or cessation of operations of equipment and systems to minimize the potential release of radiation and contamination for worker safety. The unlikely event of an instrument malfunction would have no adverse safety impact on facility personnel or the environment (i.e., radiological and hazardous chemical releases) due to the ventilation system and associated instrumentation.

The design of the ventilation systems in Buildings 772-F, 772-1F, and 772-4F has incorporated various personnel protection features that relate to the removal of airborne radioactivity and/or other hazardous material from within these buildings. These ventilation systems ensure that the airborne contamination levels within these buildings are ALARA.

The following sections discuss the personnel protection features applicable to each of these buildings.

BUILDINGS 772-F AND 772-4F

The following personnel protection features apply to the ventilation systems:

- During normal building operation, the spread of radioactivity and/or other hazardous material is prevented by the design and construction of the ventilation systems because such material is always transferred from areas of lower concentration to areas of higher concentration. Building 772-4F provides the exhaust flow to ensure that this transfer occurs. Additionally, the spread of radioactive and/or hazardous material is prevented by the ability of the HEPA filters to remove this material from the ventilation exhaust.
- During abnormal operations or under accident conditions, the spread of radioactivity and/or other hazardous material is minimized by the ability of the HEPA filters to remove radioactive and hazardous material from the ventilation exhaust.
- Within the ventilation system, the spread of radioactivity and/or other hazardous material is limited by the various subsystems, many of which have their own filters that limit the spread of such materials.
- Although ventilation exhaust cannot be provided in the event of stack failure (i.e., zero flow through the stack), such an event would result in the evacuation of the facility.
- In the event of power outages, two of the exhaust fans in Building 772-4F are supplied with standby electrical power so that one fan will automatically start to maintain the facility at a negative pressure relative to the outside. In the event of a process upset, Operations will initiate an evacuation of the laboratory modules.

In the event that airborne contamination is discovered in these buildings, the ventilation systems continue to function and perform as described previously. However, additional RCO requirements are imposed, such as the use of respiratory protection equipment in affected areas, for the protection of personnel.

The OGE system, with its HEPA filters and interconnection to 772-4F HEPA filters, ensures that the potential release of glovebox contents to the environment is minimized.

To ensure safe operation in the buildings, the ventilation systems are operated as follows:

- Three out of four of the main exhaust fans in Building 772-4F must be operating in order to permit the processing and movement of radioactive material in Building 772-F; main exhaust fan Nos. 2 and 4 are on standby electrical power.
- One of two HLDE exhaust fans operates with both fans on standby electrical power.
- One of two LLDE exhaust fans operates with both fans on standby electrical power.
- Two of three OGE fans operate, with two of three fans on standby electrical power.
- One of three air monitoring exhaust fans in Building 772-F operate with all fans capable of standby electrical power. A miniumum of one fan operating and preferred at least one in standby (configuration permitting).
- All of the six AHUs should be operating.
- The service floor exhaust fan should be operating.
- One of two air monitoring fans in Building 772-4F is operable, with both fans capable of operating on standby electrical power. One fan is in manual standby.

Operability of each of the main, off gas, and RCO exhaust fans discussed previously is periodically checked by verifying that the ventilation subsystems are operating within prescribed pressure limits.

Operability of the HLDE and LLDE exhaust fans is determined by periodically checking the system header pressures. The operability of the various filters of the ventilation system is determined throughout the life of these buildings by leak testing and/or periodic monitoring of the pressure drop across the filters.

The efficiency of the AHU prefilters and final filters in Buildings 772-F and 772-1F is determined by periodic monitoring of filter pressure drop. The air supplied to the interior of Building 772-4F is filtered by roughing filters.

BUILDING 772-1F

For Building 772-1F, the following personnel protection features apply to the ventilation systems:

- During normal building operations, the spread of radioactivity and/or other hazardous material is prevented by the design and construction of the ventilation systems, which

ensure that such materials are always transferred from areas of lower contamination to areas of higher contamination. Additionally, the spread of materials is prevented by the ability of the HEPA filters to remove radioactive and hazardous materials from the ventilation exhaust; HEPA filters that fall below an efficiency of 99.97% are changed. For this level of efficiency, each of the Building 772-1F HEPA filters, prefilters, moisture separators, and bag filters has a specified operating pressure drop range. When the pressure drop across the filters or separators exceeds specified limits, the filters are changed.

- During abnormal operations or under accident conditions, the spread of radioactivity and/or other hazardous material is minimized by the ability of the HEPA filters to remove radioactive and hazardous materials from the ventilation exhaust.
- Within the ventilation system, the spread of radioactivity and/or other hazardous material is limited by the various subsystems, many of which have their own filters that limit the spread of such materials.
- Although ventilation exhaust cannot be provided in the event of stack failure (i.e., zero flow through the stack), such an event would result in the evacuation of the facility.
- In the event of power outages, standby electrical power is provided to the main exhaust, OGE, and HLDE exhaust fan motors. Typically, in the event of a loss or low flow/pressure in any of the ventilation subsystems, the affected laboratory modules will be evacuated. If all of the main exhaust fans fail or if there is low shielded cell exhaust pressure, Building 772-1F is evacuated.

In the event that airborne contamination is discovered in the building, the ventilation systems continue to function and perform as described in the previous paragraphs. However, additional RCO requirements are imposed, such as the use of respiratory protection equipment in affected areas, for the protection of personnel.

The OGE system, with its HEPA filters and connection to the main exhaust system, ensures that the potential release of glovebox contents to the environment is minimized.

To ensure safe operation in Building 772-1F, the ventilation systems are operated as follows:

- Two of three main exhaust fans must be operating in order to permit the processing and movement of radioactive material; two fans are provided with standby electrical power.
- Two of three OGE fans (two of which are provided with standby electrical power) should be operating; if no OGE fans are operating, the routine processing and movement of radioactive material in Building 772-1F are not permitted.
- One of two air monitoring exhaust fans operates; both fans are provided with standby electrical power.
- One of two HAD exhaust fans operates; both fans are provided with standby electrical power.
- One of two shielded cell exhaust fans operates; both fans are provided with standby electrical power.

- Both supply units operate.

The operability of each of the fans discussed previously is periodically checked by verifying that the ventilation systems are operating within prescribed pressure limits. The operability of the various filters of the ventilation system is determined throughout the life of the building by leak testing and/or periodic monitoring of filter pressure drop.

2.6.2 CONTAINMENT UNITS

Gram and curie quantities (within the TSR limits) of radioactive materials and hazardous chemicals are handled in containment units to protect operations personnel and the immediate environment. Containment units in the F/H Lab consist of gloveboxes, radiohoods, radiobenches, and shielded cells. These containment units are described in the following section and are located as shown in Figures 2.4-1 and 2.4-3.

2.6.2.1 Gloveboxes

Gloveboxes are sealed containment enclosures used to isolate and handle radioactive materials (primarily alpha emitters). Gloveboxes are made of stainless steel (including all fittings) and have stub-outs for attaching a Magnehelic™ gage and, on active gloveboxes, a thermowell for a heat sensor (fire detection) probe. Gloves are installed in or below a laminated safety plate viewing window as shown in Figure 2.6-3. Glove ports are usually the 8-inch Central Research Laboratories type, designed for quick glove changeout.

Air flow to the gloveboxes is directed through inlet and outlet HEPA filters under negative pressure (approximately 0.3 to 1.0 inch WG) with respect to the area occupied by the worker. Suitable airlocks with 12- by 12-inch doorway openings are typically provided for transferring material into and out of the boxes. These airlocks are designed to allow gloveboxes to be connected with other confinement units (i.e., adjacent radiobenches or radiohoods). Solid waste exiting the gloveboxes is sealed in bags or cartons, transferred through an airlock to an adjacent radiobench or radiohood, and then transferred into an appropriate waste container. Solid waste is also removed from gloveboxes via bagout ports.

Local shielding and leaded gloves are used in gloveboxes where beta, gamma, and neutron radiation is high. Basic glovebox accessories typically include the following:

- Glove ports (metal, plastic, or sphincter)
- Entry port or airlock
- Inlet HEPA filter housing
- Exhaust HEPA filter housing
- Bag ports
- Lights
- Electrical services

- Laboratory services
- OGE connections
- Differential pressure gage
- Panels for introducing analytical equipment

2.6.2.2 Radiohoods

Radiohoods are used for handling small quantities of radioactive materials and corrosive chemicals that are hazardous to operations personnel.

The majority of the radiohoods are similar to the most recent design shown in Figure 2.6-4. Each radiohood has a vertically sliding laminated safety plate glass front controlled with sash balancers and stops, or horizontally sliding sashes.

The opening in the front of some radiohoods is designed so that the linear flow of exhaust air remains constant as the window is moved; others have nonbypass sashes. Incoming air enters the face opening and exhausts to the top, sides, and bottom grills of the exhaust plenum located at the rear of the radiohood. Screens are provided for the exhaust openings. In the most recent design, newer radiohoods are constructed of stainless steel. Older radiohoods were constructed of wood or fiberglass and are no longer in service.

A service strip located at the back lower portion of the radiohood contains laboratory services (air, water, vacuum, and electrical services). Some radiohoods contain a cup sink drain for the disposal of radioactive liquids. A removable metal tray with raised edges is provided at the bottom of older radiohoods. Newer radiohoods have an integral, nonremovable tray to catch and contain liquid spills. The radiohood is mounted on a steel support stand that has control valves for laboratory services mounted on the front. Lights are mounted on the outside top portion of the radiohood.

2.6.2.3 Radiobenches

Radiobenches are used for handling small quantities of radioactive materials. Pip setting, chemical extractions, sample plating, and instrument analyses are performed in this type of containment enclosure, which protects the technician from radioactive materials and corrosive chemicals. Liquid samples can be analyzed in this type of enclosure without the restriction of movement that is encountered in a glovebox.

The majority of the radiobenches, as shown in Figure 2.6-5, are similar in design. Each bench has a laminated safety plate glass front. The opening at the face of the bench varies from 8 to 11 inches high. Incoming air enters the face of the radiobench at this opening and is exhausted through the top and front of the service strip into a duct at the rear of the bench. Screens are provided for the exhaust openings. New radiobenches are constructed of stainless steel. Older units are constructed of wood or fiberglass and are no longer in service.

A service strip located at the back of the radiobench contains laboratory services (i.e., air, water, HAD, vacuum, and electrical services). A removable metal tray with raised edges is provided at the bottom of older radiobenches. Newer units have an integral, nonremovable tray to catch and contain liquid spills. The bench is mounted on a metal cabinet stand tied to the laboratory module wall. A fluorescent light is mounted at the top of the radiobench face.

Design and construction materials of the radiobenches vary in different laboratory modules. Radiobenches are usually constructed in trains with pass-through openings. Some radiobenches are connected to gloveboxes and radiohoods with airlocks or connecting doors.

2.6.2.4 Shielded Cells

A shielded cell is a large containment enclosure used to handle high-activity radioactive materials. The primary functions of the shielded cells are to provide a safe means of receiving samples of process streams (including raw dissolver solutions and waste materials), to perform analytical chemistry directly on some of the samples, and to dilute others to acceptable radiological levels to permit analysis in the unshielded laboratories.

These cells contain small quantities of highly radioactive (beta/gamma) sample solutions that either are analyzed remotely or are diluted and then transferred to adjacent laboratories for further analysis.

Combustible materials are maintained to a minimum, and total organic solvents are maintained at laboratory scale volumes which ensures the generation of only localized flammable vapor clouds.

Building 772-F contains two shielded cells. Building 772-1F contains four shielded cells. There are no shielded cells in Building 772-4F. The cells in both Buildings 772-F and 772-1F are similarly designed.

The shielded cells are located in a cell block having 20-inch-thick high-density concrete walls lined with stainless steel to a height of 7 feet. The walls are designed to attenuate 200 curie of 0.7 million electron volt gamma activity to levels such that personnel occupying the vicinity of the cells for 40 hours per week would not receive doses exceeding the regulatory guideline level of 0.5 millirem per hour (mrem/hr).

The top upper walls of the cell block in Building 772-F is enclosed with a carbon steel box-like structure. The top upper walls of the cell block in Building 772-1F is enclosed with a stainless steel box-like structure. A remotely operated, half-ton overhead crane is provided to move heavy equipment. The cells are served by sample introduction transfer systems and sample container decontamination areas behind the cells. A work area for manipulator maintenance is located in Room 143 of Building 772-1F.

Visual access to the Building 772-1F cells is provided by viewing windows of two 7-inch-thick ground and polished plates of 5.2 grams per cubic centimeter density lead glass laminated to a 1-inch-thick ground and polished plate of 2.5 grams per cubic centimeter density glass. Visual access to the Building 772-F cells is provided by oil-filled viewing windows of three 6-1/4-inch-

thick ground and polished plates of 3.3 grams per cubic centimeter density lead glass. A separate 1-inch-thick, cerium-stabilized, non-browning, 2.5 grams per cubic centimeter density plate glass seals the inside of the viewing windows from the cells and has a 1.25-inch air gap. The straight-through viewing area of each window is 25.5 inches by 30 inches.

Normal occupancy for the sample receiving, transfer, and container decontamination areas is one person per pair of cells. Normal occupancy for the shielded cell work room and adjacent analytical laboratory is two to three people per pair of cells.

Seven-foot-high stainless steel barriers separate the inner space of the cell block into working and loading cells. A 3.5-by 4-foot stainless steel work table is provided in the center of each cell for analytical work and preparation of sample aliquots for transfer to work areas outside the cells. At the rear of each work table, space is provided for storage of sample vials in stainless steel racks.

Each cell is equipped with two manipulators with tongs and cables mounted in the front operating face of the cell bank. The manipulators are positioned to provide complete coverage of the working area. An unobstructed space of 15 feet is provided in front of each cell face for removal of the manipulators.

A conveyor system is provided for moving diluted samples from within the Building 772-1F cells to the area immediately outside the cells. The shielded cells in Building 772-F have been de-inventoried and are no longer in service.

2.6.2.5 High- and Low-Activity Drain System Transfer Tanks

The function of the HAD and LAD system transfer tanks is to provide a repository for temporary containment and storage of radioactive liquids prior to transfer for disposal or recovery. Section 2.5.3 describes the transfer tanks.

2.6.2.6 High-Efficiency Particulate Air Filters

HEPA filters remove airborne radioactive particles from the main exhaust system and contributing streams and contain the particles within the filter elements, prior to discharging the air into the environment. Section 2.6.1.1 briefly discusses the HEPA filters within the main exhaust system.

2.7 SAFETY SUPPORT SYSTEMS

2.7.1 NUCLEAR CRITICALITY SAFETY

Nuclear criticality safety is achieved primarily by administrative controls in conjunction with single-parameter mass limits. This system of administrative controls provides the barrier against a nuclear criticality accident.

These controls are based on the following element:

- Nuclear criticality safety limits are established to provide the largest practical margins of safety.

2.7.1.1 Buildings 772-F and 772-1F

ADMINISTRATIVE AND PROCEDURAL CRITICALITY CONTROL

Nuclear criticality safety is provided by limits or specifications on the following:

- Handling and storage of fissile materials
- Maximum permissible amounts of fissile isotopes and mixtures of fissile isotopes
- Fissile isotopic content
- Permissible methods for quantity and concentration determination

Designated laboratory module zones in Buildings 772-F and 772-1F handle fissile material. In each of these zones, the quantity of fissile material allowed is posted at the zone entrance. When fissile material of unknown concentration is received, it is assigned a concentration that is conservative (with respect to nuclear criticality) until the actual concentration is determined.

AUDIT AND SURVEILLANCE CONTROL

Specific individuals are given primary responsibility for maintaining the inventory of fissile material below the stated limits. A criticality coordinator is given primary responsibility for auditing the designated handling areas as a secondary measure to ensure that the inventory of fissile material remains below the permissible levels established in the procedures. During periods of heavy sample activity, inventories of fissile materials may increase, and special audits are conducted to maintain tight control of the building inventory. The criticality coordinator is also responsible for reviewing proposed procedural changes that may impact or modify nuclear criticality safety requirements.

CRITICALITY SAFETY TRAINING

A criticality is prevented from occurring by training personnel in important criticality concepts and procedures.

The type of equipment and nature of the work performed in the F/H Lab are unusual and subject to requirements far beyond those of more conventional industries. Of primary importance are requirements regarding the qualifications and training of individuals performing radiological work at SRS.

The training program for personnel conducting work in the F/H Lab ensures that only trained individuals implement analytical procedures and maintain the equipment and systems. Chapters 6 and 12 of this SAR further discusses criticality safety training.

2.7.1.2 Building 772-4F

Since Building 772-4F does not contain any process systems that handle fissile or fissionable nuclides, the building does not represent a potential nuclear criticality concern (Ref. 13).

2.7.2 FIRE SAFETY

In accordance with the latest requirements contained in the Standards/Requirements Identification Documents (S/RIDs) (Ref. 21), facilities shall comply with DOE Order 420.1B (Ref. 36). To maximize protection against fire, the fire protection system integrates appropriate prevention, detection, and suppression features.

Chapter 11 of this SAR discusses the fire protection program relative to operational safety. Section 2.7.8 describes the fire protection system, its major components, control functions, and the preventive, detection, and suppression features relied upon in each building.

2.7.2.1 Buildings 772-F and 772-1F

Fire detection and alarm systems, as well as fire extinguishing systems (sprinklers), are provided in Buildings 772-F and 772-1F to protect personnel, the integrity of sample process confinement, and laboratory operations. Fire suppression systems, including sprinkler systems, are used to rapidly control a fire, thereby minimizing the potential heat pressurization of confinement, contamination spread, and plugging of HEPA filters. While no capability exists for the collection of fire protection water in Building 772-1F, limited water collection capability is provided in Building 772-F by service floor sumps. The Building 772-F service floor sump pumps automatically discharge to the monitored F-Area segregated cooling water system.

2.7.2.2 Building 772-4F

Fire detection and suppression are needed in Building 772-4F, primarily for protection of ventilation confinement and equipment because the structure is normally unmanned. The only

physical connection between Buildings 772-4F and 772-F is by way of the ventilation system. Smoke detectors located in the Building 772-F AHUs will disable the AHUs and Building 772-4F main exhaust fans (except one) to protect the Building 772-4F HEPA filters. Building 772-4F is protected throughout by an automatic wet-pipe sprinkler system. Some capability for the collection of fire protection water is provided by the raised concrete sill around the perimeter of the facility. A fire alarm system is also provided.

2.7.3 CHEMICAL SAFETY

Certain commercial chemical products and their reagents (being the sole active ingredient) are considered hazardous by environmental regulations under the Resource Conservation and Recovery Act. These chemicals either are on a list (developed by regulatory agencies) or have characteristics (such as toxicity, flammability, corrosiveness, or reactivity) that could cause environmental damage if not properly managed. Hazardous chemicals in Buildings 772-F and 772-1F are labeled before being discarded (Ref. 15). The material safety data sheets provide instructions for handling each chemical. Hazardous material protection is described in more detail in Chapter 8.

The quantity of each chemical used in analyses or stored in a laboratory module is usually very small (from about 1 gram up to 1 kilogram). Individual laboratory rooms are limited to a maximum of 5 gallons of flammable or combustible solvents. Smaller amounts of solvents (500 ml or less) can be kept in other containers such as plastic bottles. However, the total room limit still applies.

2.7.3.1 Building 772-F

An inventory of the chemicals that are typically used to conduct the analytical operations and that have disposal concerns in Building 772-F is provided in WSRC-TR-94-0114 and Manual L2-1 (Ref. 13, 15).

Chemicals are stored in the laboratory modules in specified locations. Flammable solvents in unopened vendor containers are stored in labeled cabinets on the service floor. The main solvent storage area is diked and contains the liquids in fire-rated, National Fire Protection Association (NFPA)-approved solvent storage cabinets. A chemical storage area located near the described flammable solvent storage area consists of unopened vendor containers (one gallon or less each) of concentrated acids and bases stored in several acid/base-type cabinets.

The procedures in Manual L2 provide information and guidelines for the handling and disposition of commercial chemical products in the F/H Lab (Ref. 22).

2.7.3.2 Building 772-1F

An inventory of the chemicals that are required to conduct the analytical operations in Building 772-1F is provided in WSRC-TR-94-0114 and Manual L2-1 (Ref. 13, 15). Room 136 is the primary reagent preparation laboratory and contains most of the chemicals listed in

WSRC-TR-94-0115 (Ref. 14). Various nonradioactive reagents and standards used in analyses by personnel of the production control group are prepared and stored in this laboratory. Chemical inventories are maintained low.

The design and operation of primary and support equipment and processes used in Building 772-1F are similar, or nearly identical, to the equipment and processes used in Building 772-F. The procedures in Manual L2 provide information and guidelines for the handling and disposition of commercial chemical products in the F/H Lab (Ref. 22). Instructions and guidelines are also given for liquid effluent handling and disposition of these chemicals during an effluent treatment facility shutdown condition, which invokes additional requirements and restrictions.

2.7.3.3 Building 772-4F

Building 772-4F houses the main exhaust system equipment. There are no laboratories, process systems, or hazardous chemicals associated with the design and operation of this building; therefore, there are no chemical safety concerns related to Building 772-4F (Ref. 13).

2.7.4 PROCESS SHUTDOWN MODES

If it becomes necessary to cease normal operations and to shut down Buildings 772-F, 772-1F, and 772-4F on an emergency or non-emergency basis, the facilities shall be taken out of service in the following manner:

- Minimizing the possibility of a nuclear incident during the forced (or planned) outage
- Minimizing the spread of contamination
- Preventing the loss of product and breach of confinement integrity
- Minimizing damage to equipment and property

Operation of Buildings 772-F, 772-1F, and 772-4F can be categorized under one of two modes: Operation or Warm Standby. Process shutdown for these buildings is represented by the Warm Standby mode during which the transfer or movement of radioactive or fissile material is not allowed. Warm Standby is the only process shutdown mode for these facilities.

Based upon the evaluative criteria and methodology described in Chapter 5 of this SAR, no systems, components, or parameters have been identified that require safety limits. However, administrative controls are specified to ensure that criticality and other safety contingencies are maintained.

In the Operation mode, the TSRs include administrative controls for the following:

- Main exhaust system HEPA filters
- Radionuclide and chemical inventory
- Propane inventory

The basic difference between the Operation and Warm Standby modes is that the movement or transfer of radioactive or fissile material is permitted during the Operation mode but prohibited during Warm Standby. The time required to change modes is negligible. Since adequate facility conditions and surveillance requirements are in place for the Operation mode, Buildings 772-F, 772-1F, and 772-4F do not represent a potential for shutdown concerns.

2.7.5 INSTRUMENTATION

Process control parameters in Buildings 772-F, 772-1F, and 772-4F are necessary to maintain the processes in a safe regimen of operation with respect to personnel and equipment. Alarm settings provide appropriate margins of safety. Redundancy and service by standby electrical power are used where controls may be essential to a process operation (although not required for safe shutdown).

A basic principle in instrumentation is to maintain simplicity and directness in obtaining a measurement or controlling a process. In designing or selecting an instrument system, the specific application and performance requirements of the instrument must be considered.

To ensure a safe regimen of sample operation, instrumentation is installed to monitor and control key process parameters related to stack effluent (i.e., main exhaust), OGE, and HAD and LAD effluent. None of the instrumentation for the primary process systems and the ventilation systems is considered to be Safety Class. Other instrumentation is installed to monitor and control service and utility systems associated with the primary processes. Instrumentation for the service and utility systems is not considered important from a safety analysis consideration and is discussed in Section 2.8.

2.7.5.1 High- and Low-Activity Drain Systems

The entire HAD and LAD systems are exhausted by fans to prevent backflow of contaminants into the laboratories. The filtered exhaust is discharged to the main exhaust system and into the environment through the Building 772-4F stack. Section 2.5.3 provides a detailed description of the HAD and LAD systems in Buildings 772-F and 772-1F.

The HLDE and LLDE systems in Building 772-F have low air pressure switches that monitor system pressure. When system pressure is low, the pressure switch will alarm in the CR and RCO offices. When this alarm is received, operations personnel must manually start the standby fan.

The HLDE system in Building 772-1F has a low air pressure switch that reads the pressure across the fan. When system pressure is low, the pressure switch will automatically open the standby fan discharge damper, start the standby fan, shut down the low flow fan, close its discharge damper, and sound an alarm in the CR and RCO offices.

2.7.5.2 Off Gas Exhaust System

The OGE is monitored for radioactivity as a component to the total exhaust which is monitored in 772-4F prior to being released to the environment. When offgas static pressure falls below a pre-established setpoint, the standby fan will automatically start.

The OGE from Building 772-1F is discharged into a header and passed through a leak-testable, single-stage HEPA filter. The exhaust is then discharged to the upstream portion of the main exhaust system and is passed through a double-stage, leak-testable HEPA filter before being released to the environment. The OGE is monitored as a contributing stream by particulate samples. In the event of low differential pressure across a fan, a pressure switch will automatically open the standby fan discharge damper, start the standby fan, shut down the low-flow fan, close its automatic discharge damper, and sound an alarm at the CR and RCO offices. All stack high-activity alarms, including all stack instrument trouble alarms and low air flow alarms, are routed to the CR and RCO offices in Building 772-1F.

Constant header pressure is maintained with a pressure controller that controls a variable damper in the suction header.

2.7.5.3 Main Exhaust System

Each of the four main exhaust fans in Buildings 772-4F and the three main exhaust fans in Building 772-1F have variable inlet vanes, automatic discharge dampers, and manual suction and discharge isolation dampers. The discharge dampers are interlocked with the fans to open upon operation of the fans and to close when the fans stop to prevent windmilling (i.e., reverse rotation). The discharge dampers in the 772-4F ME System are air operated via an electrical solenoid and will fail in the “as-is” position upon a loss of normal power or instrument air. The discharge dampers in the 772-1F ME System are motor operated and will fail in the closed position upon loss of normal power. Standby electrical power will open the discharge damper on the running fan and maintain closed the discharge dampers of the fans not running. The variable inlet guide vanes are used to maintain constant air flow. The flow controller will open the inlet vanes when the flow needs to be increased or close them when the flow needs to be decreased. The service floor exhaust fan in Building 772-4F is equipped with similar controls.

The controls for the main exhaust system in Building 772-4F maintain a constant volume of air flow. A velocity probe located in the concrete plenum on the service floor of Building 772-F is used to determine the velocity of the air.

The controls for the main exhaust system in Building 772-1F maintain a constant flow via pressure control. The flow controller operates upon a pressure differential between the exhaust dirty plenum (upstream of the HEPA filters) and the filter room.

2.7.6 REMOTE AND CONTACT MAINTENANCE TECHNIQUES

It is the policy of SRS to protect employees from exposure to radiation and contamination (radioactive or chemical) by using facilities and equipment with engineered and administrative safeguards incorporated into their design.

Maintenance activities performed in Buildings 772-F, 772-1F, and 772-4F are essentially identical and are typically performed by direct contact with equipment. Maintenance activities involving radiation and contamination are administratively controlled to ensure that ALARA principles of time, distance, and shielding are used. Periodic personnel training in the use of engineered physical safeguards (e.g., remote operation, shielding, and layout) is the primary means of ensuring radiation protection. Administrative controls, such as stay times and the identification and posting of areas of high radiation and contamination, while providing only secondary RCO assurance, also help reduce exposure of maintenance personnel.

Maintenance activities involving chemical hazards are also physically and administratively controlled to ensure that personnel are not exposed to unnecessary hazards.

All permanent shielding (including that for routine maintenance) is installed to control radiation exposure. All permanent shielding is designed to give a radiation field no greater than 0.5 mrem/hr in continuously occupied areas and 5 mrem/hr in intermittently occupied areas (individual occupancy less than 10% of the work day) in accordance with the requirements identified in the S/RIDs (Ref. 21). Additionally, shielding is tested for adequacy during startup procedures whenever practical.

Configuration design maximizes the isolation and compartmentalization of the higher risk areas of external radiation exposure or airborne contamination. The service floor is an Radiological Buffer Area. Shielded Areas A, B, and C; the fan room; and the filter room are high contamination areas. Entry into these locations is controlled by procedure.

Remote manipulators and extension arms are provided in the shielded cells to maximize the ALARA concept of maximizing distance and shielding during the handling of radioactive materials. The breathing air compressor and air distribution system provide clean breathing air to personnel working in areas with atmospheres hazardous to the employees' respiratory systems (Ref. 23).

2.7.7 EFFLUENT MONITORING

2.7.7.1 Gaseous Effluent Monitoring

SOURCES OF GASEOUS EFFLUENTS

The following sources contribute to the gaseous effluents discharged through the 190-foot stack of Buildings 772-F and 772-4F:

- Building main exhaust
- Service floor exhaust
- Radiobenches and radiohoods
- Shielded cells
- HLDE and LLDE
- Decontamination rooms
- Shielded Areas A, B, and C
- Fan and filter rooms
- Change room exhaust
- Air monitoring exhaust
- Exhausts from the restrooms and janitors' closets

The OGE from Building 772-F is discharged to the Main Exhaust system which discharges through 772-4F.

The following sources contribute to the gaseous effluents discharged through the 135-foot stack of Building 772-1F:

- Building main exhaust
- Glovebox OGE
- Radiobenches and radiohoods
- Shielded cells
- HLDE
- Decontamination rooms
- Air monitoring exhaust
- Exhausts from the restrooms and janitor closets

MONITORING OF STACK EFFLUENTS

The total discharges from the main exhaust system in Buildings 772-F, 772-1F, and 772-4F are monitored for potentially radioactive and other hazardous gaseous effluents by the stack monitoring system. The gaseous effluent monitoring instrumentation in these buildings is in accordance with the current requirements of the ANSI standards.

The gaseous effluent monitoring instrumentation is installed in a horizontal section of duct upstream of the Building 772-4F stack and installed directly in the Building 772-1F stack. The stack monitoring instrumentation consists of an isokinetic (Building 772-4F only), continuous, multipoint sampling system to provide representative samples. The major components of the sampling system include the following:

- System electronics
- Stack flow rate measurement devices (Building 772-4F only)
- Sample chambers
- Sample flow rate measurement devices
- Microprocessor-based mass flow computer (Building 772-4F only)
- Field calibrator (Building 772-4F only)
- Count rate meters
- Associated alarms

Continuous alpha and beta-gamma monitors are included in the stack sampling system (Ref. 24). Contributing streams to the main exhaust are continuously sampled via passive filter paper samplers and are not monitored like the stacks.

All stack high-activity alarms, including stack instrument trouble and low air flow alarms, are routed to the CR and RCO offices. The monitoring systems are equipped with recorders to provide a permanent continuous record of activity. Manual 5Q1.5 provides procedures for operation of the stack monitoring system (Ref. 24).

Frequency of Sampling

Effluent from both stacks is sampled on a continuous basis. Periodic surveillances are also performed for the continuous stack radiation monitoring systems during all modes of operation.

MONITORING OF CONTRIBUTING STREAM EFFLUENTS

The air monitoring system provides exhaust for sampling the atmosphere in radiological areas and the contributing exhaust streams, including the following:

- Exhaust ducts
- HLDE and LLDE system headers
- Transfer tank exhaust headers
- Cell exhaust header
- Vacuum exhaust headers
- Filter room
- Fan room
- Laboratory modules
- Main exhaust plenums
- Stacks

The air monitoring fans in Building 772-F are located on the lower level along the south wall of the fan room. One of the three fans in Building 772-F operate continuously, maintaining an approximately 3-cfm flow across each of the sampling points within the building during normal operation (Ref. 17). The third fan serves as a standby unit. An alarm will sound upon a loss of static pressure, alerting operators that the standby fan must be manually started. Air from these fans discharges into the main exhaust system in the concrete vault prior to entering Building 772-4F. The total exhaust from the one operating fan is 600 cfm. Controls for the fans are located on the building services panel board on the service floor.

The air monitoring fans for Building 772-4F are located on the south mezzanine. The two fans operate with one online and the other on manual standby. An alarm will sound upon loss of static pressure, alerting operators that the standby fan must be manually started. Air from these fans discharge to the main exhaust system and the fans are protected by single stage HEPA filters. The total exhaust from the operating online fan is 105 cfm. Controls for the fans are located on the mezzanine.

The air monitoring fans in Building 772-1F are located in the southwest corner of the filter room. The low-capacity, high-vacuum sampling system contains two air monitoring fans. One fan runs continuously with one fan on standby during normal operation. Upon a loss of static pressure, the standby fan will start automatically (Ref. 17). Air from these fans discharges into the Building 772-1F main exhaust as a contributing stream.

In Buildings 772-1F and 772-4F, particulate filters sample the main exhaust air after it is drawn through a prefilter and two leak-testable HEPA filters before it is exhausted to the stack plenum.

Air from the contributing exhaust streams in Building 772-1F is sampled for the presence of radioactive particulates at the main header for each exhaust system. RCO uses the filter paper sampling method. The sampled air is then discharged to the main exhaust system and monitored by the stack effluent monitoring instrumentation. Manual 5Q1.5 identifies the monitoring and sampling procedures (Ref. 24).

Frequency of Sampling

RCO surveys of the contributing exhaust streams in Buildings 772-F and 772-1F are conducted periodically during normal operation. These surveys are sufficient to detect large accumulations of special nuclear materials, which are expected to be at quantities far below nuclear criticality safety limits.

2.7.7.2 Liquid Effluent Monitoring

SOURCES OF LIQUID EFFLUENTS

The following sources contain high-activity liquid effluents generated in Buildings 772-F and 772-1F. High-activity liquids and chemicals from these sources enter the HAD system and are routed to the HAD system transfer tank.

- Gloveboxes, radiobenches, and radiohood cupsinks
- Shielded Area A sump (Building 772-F only) - inoperative
- Shielded cells

The following sources can contain low-activity liquid effluents generated in Buildings 772-F and 772-1F. Low-activity liquids and chemicals from these sources enter the LAD system and are routed to the LAD system transfer tanks. The safety showers in Building 772-1F discharge to the floors without drains.

- Laboratory sink drains
- Decontamination sink drains
- Sprinkler water discharge
- Eyewash stations and safety showers (Building 772-F only)
- HAD flush tank overflows

Other sources of liquid effluent discharged from the F/H Lab include noncontact cooling water for the compressors, sanitary sewage, and process water drains. These effluents are monitored at the treatment facilities and, therefore, are not monitored within the F/H Lab. Chapter 9 of this SAR describes radioactive and hazardous waste management.

MONITORING OF LIQUID EFFLUENTS

All liquid effluents generated by analytical laboratory processes conducted in the following areas are collected and temporarily stored in the appropriate HAD and LAD system transfer tanks:

- Gloveboxes, radiobenches, and radiohoods
- Shielded cells
- Drainage into the Shielded Area A sump
- Sprinkler water
- Transfer tank sumps

Radioactive and hazardous chemical effluents are temporarily stored in these tanks and are not released to the environment.

A steam ejector is provided for Tanks A and B to transfer the contents between tanks and an electrical pump is used to transfer HAD Effluent to the LR-56S (which will transport HAD to H Canyon) and LAD to Effluent Treatment Project for processing and disposal. Section 2.7.7.1 discusses gaseous effluent monitoring of the HAD and LAD systems.

The effluent and environmental monitoring program, discussed in Chapter 9 of this SAR, describes the routine monitoring and control of aqueous radioactive materials, hazardous chemical solutions, and the respective procedures for implementation.

2.7.7.3 Solid Waste Monitoring

SOURCES OF SOLID WASTE

The following types of Transuranic and low-activity solid waste are generated in Buildings 772-F and 772-1F. This waste is monitored, packaged according to its level of radioactivity, and shipped for recovery or disposal:

- Low-activity beta-gamma waste
- Alpha waste
- Transuranic waste
- Low-activity compactable waste

A discussion of the sources of hazardous and mixed solid waste is contained in Chapter 9.

MONITORING OF SOLID WASTE

All solid radioactive materials, chemical wastes, and sample residues from analytical laboratory processes are prepared and returned to the production facility for recovery or to the Solid Waste Disposal Facility for disposal. Radioactive and potentially radioactive solid wastes are not released directly into the environment from Buildings 772-F and 772-1F. Therefore, dedicated solid waste continuous effluent monitors (other than the monitoring devices for particulate accumulation on the HEPA filters in the central and OGE systems) are not required. Chapter 9 of this SAR describes the waste management systems.

2.7.8 FIRE PROTECTION SYSTEMS

2.7.8.1 Design Basis

FIRE PREVENTION AND MITIGATION

Buildings 772-F and 772-1F

The control features in these buildings that are relied upon to prevent fires from starting in these buildings are listed in Section 5 of Manual 2Q and also include the following (Ref. 25):

- Good housekeeping practices that limit the amount of transient combustibles
- Storage of flammable liquids in flammable liquid cabinets

If a fire were to occur in Buildings 772-F and 772-1F, the following features would aid in the detection and suppression of the fire:

- Smoke and heat detectors are provided in essential areas of the buildings, including heat detectors in active gloveboxes (Building 772-F labs 130, 159, and 163 have inactive gloveboxes without heat detection which are planned to be dismantled and removed; however, heat detection will be added if they are placed into service).
- The buildings are provided with a partial-coverage wet-pipe sprinkler system suppression system in various locations.
- The activation of a water flow detector in the sprinkler systems will initiate a local alarm for occupant notification and a remote alarm for notification of the SRS Fire Department.
- Portable fire extinguishers are provided throughout the buildings, and hydrants are available outside the buildings.
- A fire department hose connection is provided at the southeast corner of Building 772-F.
- Manual fire alarm pull boxes are provided in both Buildings 772-F and 772-1F (Figure 2.7-1).

Building 772-4F

The following features aid in preventing fires from starting in this building:

- The building is adequately separated from nearby buildings such that a fire in any of the nearby buildings will not propagate to Building 772-4F.
- A fire department hose connection is provided at the south side of Building 772-4F.
- The interior finish materials of Building 772-4F are essentially noncombustible (flame spread rating less than 25) such that they do not provide an appreciable heat contribution.
- All electrical equipment in the building is installed in accordance with the National Electric Code, thereby reducing the potential for an electrical initiation of a fire.
- The combustible loading in the building is low. This low loading ensures that if a fire were to start, the fire would likely be small and self-extinguishing.
- Transient combustibles are controlled to limit the amount of such materials to that required for operations and maintenance purposes.

If a fire were to occur in Building 772-4F, the following features would aid in the detection and suppression of the fire:

- The building is provided with a supervised, automatic, full-coverage wet-pipe sprinkler system.
- The activation of a water flow detector in the sprinkler system will initiate a local alarm, including horns and strobes, for occupant notification and a remote alarm notification of the SRS Fire Department and the CR.
- Manual fire alarm pull boxes are located near the building exits (Figure 2.7-2).
- Portable fire extinguishers are provided, and hydrants are located nearby.

DESIGN BASES FOR STRUCTURES AND SYSTEMS

Buildings 772-F and 772-1F

The basic design of these facilities contributes to fire prevention and lack of propagation through the use of noncombustible construction (see the Fire Hazards Analysis for Building 772-F for exceptions for Building 772-F) and compartmentalization of laboratory/process areas (Ref. 26). The design of the fire systems in these buildings was based upon Du Pont engineering standards in effect at the time. No seismic requirements have been imposed on the fire protection systems in these buildings.

Building 772-4F

The basic design of Building 772-4F contributes to fire prevention through the use of noncombustible construction and compartmentalization of the electrical room from the remainder of the building facilities to reduce the potential size of a fire. The design of the fire detection, suppression, and control systems in this building was based upon DOE Orders and NFPA Codes as discussed in the following section. No seismic requirements have been imposed on the fire protection systems of this building.

CODES AND STANDARDS

The fire protection systems in Buildings 772-F and 772-1F were designed and installed in accordance with the Du Pont engineering standard for fire protection in effect at the time. The fire protection systems in Building 772-4F were designed and installed in accordance with the following:

- Fire protection requirements of DOE Orders 6430.1A and 420.1B (Ref. 6, 36)
- NFPA 101 with regard to exit signs and exit illumination (Ref. 27)
- NFPA 70 with regard to electrical equipment and apparatuses (Ref. 28)
- NFPA 13 for the building automatic sprinkler system (Ref. 29)
- NFPA 10 for portable fire extinguishers (Ref. 30)

HAZARDOUS MATERIALS

Materials normally used in Buildings 772-F and 772-1F that can present fire hazards or complicate firefighting activities are listed together with typical inventories in WSRC-TR-94-0114 and WSRC-TR-94-0115, respectively (Ref. 13, 14). There are no hazardous materials that are normally used in Building 772-4F (Ref. 13).

2.7.8.2 System Description

FIRE WATER SYSTEM DESCRIPTION

Buildings 772-F, 772-1F, and 772-4F are supplied with fire water from two dedicated 510,000-gallon fire water storage tanks and three fire pumps. Figure 2.7-2 shows a partial view of the F-Area fire water main loop supporting these facilities, along with hydrants and post-indicator valves. The fire water system header supplies water to the water-based suppression systems in Buildings 772-F, 772-1F, and 772-4F, as well as in other F-Area facilities. Building 772-F has a 10-inch lead-in tapping off the 24-inch main entering the southeast end of the building at the service floor. The lead-in for Building 772-1F enters the south side of the building in the mechanical room. A 6-inch lead-in enters the south end of Building 772-4F. Buildings 772-F, 772-1F and 772-4F are equipped with post-indicator valves to isolate their sprinkler systems. However, Buildings 772-F and 772-1F both contain isolation valves on their risers.

Building 772-F

Figures 2.7-3 and 2.7-4 show the physical arrangement of the fire suppression systems in Building 772-F. Fire suppression for this building is provided by a supervised partial-coverage wet-pipe sprinkler system and a preaction sprinkler system in the diesel generator room. The sprinkler system in this building has a separate riser serving the main and service floors. A single alarm check valve serves both risers, and each riser has its own paddle wheel flow switch. The sprinkler heads' ranges are from 135°F to 286°F temperature. Automatic sprinklers are provided in each analytical laboratory module and portable extinguishers are provided throughout the facility. A fire department connection is supplied outside the southeast end of the building. Active gloveboxes in the laboratories have heat detection, and heat detectors are installed in the diesel generator room. Smoke detectors are located in the supply AHUs and in the computer room. The only rooms having no suppression or detection system are as follows:

- Shielded cells (adjacent to Room No. 151)
- Transfer tank cells
- Fan room
- Filter room
- Sample Tunnel
- Southwest Entrance Vestibule
- East Air Lock
- Airlock 151

The fire alarm system in Building 772-F is activated by heat or smoke detectors or activation of the sprinkler or one of 15 pull stations strategically located throughout the main and service floors. The main fire alarm panel, located near the southwest entrance, activates horn-strobes on

the main and service floors of the facility and a Digital Alarm Communication Transmitter (DACT) unit in the Building 772-1F CR, which notifies the SRSOC.

Building 772-1F

Figure 2.7-5 shows the physical arrangement of the fire suppression systems in Building 772-1F. Fire suppression for this building is provided by a supervised partial-coverage wet-pipe sprinkler system and two manual deluge sprinkler systems. The fire water system in this facility has an alarm check valve with a paddle wheel flow switch. The sprinkler heads are 165°F rated ordinary temperature heads. Automatic sprinklers and portable extinguishers are provided in each laboratory module. Gloveboxes contain heat detectors as well.

The manual deluge sprinkler systems protect the gas cylinder storage shed and the Building 772-1F diesel outside the facility. Most rooms having no suppression systems do have a supervised detection system and a portable fire extinguisher. The only rooms having no suppression or detection systems are Rooms 108, 147, and 117 through 119.

The fire alarm system in Building 772-1F is activated by manual pull stations, heat or smoke detectors, or activation of the sprinkler system. Four fire alarm pull stations are strategically located around Building 772-1F. Fire alarms are indicated on the graphic panel and the main fire alarm panel in the CR. The graphic panel is supplied with indicator lights for activation of the Building 772-F AHU smoke detectors, as well as for indication of a bypass of these detectors for maintenance/testing purposes. A combination horn-strobe for the Building 772-4F fire alarms is located in the CR. The fire alarm panel near the southwest entrance of Building 772-F is monitored visually and audibly by way of the DACT located in the CR. Fire/trouble alarms are automatically transmitted to the SRSOC by the DACT.

Building 772-4F

Figure 2.7-6 shows the physical arrangement of the fire suppression systems in Building 772-4F. Fire suppression for this building is provided by a supervised, automatic, full-coverage wet-pipe sprinkler system. The sprinkler system has an alarm check valve with a retard chamber and pressure switch and includes an SRS Fire Department pumper truck connection. The sprinkler heads are 212°F rated intermediate temperature heads. Additional manual fire control is provided by portable fire extinguishers in accordance with NFPA 10 (Ref. 30).

The fire alarm system in Building 772-4F is activated by manual pull stations or by actuation of the sprinkler system. Manual fire alarm pull stations are strategically located within Building 772-4F near the exits. The primary Building 772-4F fire alarm panel provides a local alarm by way of horns/strobes for Building 772-4F occupant notification and remote notification of the SRS Fire Department and the CR. The fire alarm panel also supervises the AHU duct smoke detectors in Building 772-F for fire and trouble indications and reports to the SRS Fire Department.

SHIFT OFFICE AND SAFETY CLASS EQUIPMENT FIRE PROTECTION

Buildings 772-F and 772-1F do not contain any Safety Class equipment. However, each building has a primary area from which the processes of the buildings are centralized. For Building 772-F, this area is the building services panel board on the service floor as shown in Figure 2.4-2. The building services panel board is protected by automatic suppression systems used for the service floor. For Building 772-1F, operations are centralized through the CR (Room 146). This CR also serves Building 772-F, as well as other facilities.

Room 146 in Building 772-1F is protected by the building fire suppression system. Building 772-4F does not incorporate a process CR and does not contain any Safety Class equipment.

FIRE DETECTION, ALARM, AND SUPPRESSION SYSTEM DESIGN

The following sections discuss design features specific to each of these buildings.

Building 772-F

The sprinkler system for this facility is hydraulically designed for Ordinary Hazard Group 1 for the Main Floor and Ordinary Hazard Group 2 for the Service Floor as discussed in the Fire Hazards Analysis for Building 772-F (Ref. 26).

The fire systems, in addition to being normally powered, can receive standby electrical power from the Building 772-F No. 1 standby diesel generator. Battery backup power is provided for the main fire alarm panel. It in turn reports to the DACT in the 772-1F CR, which also has battery backup. The DACT reports to the SRS Fire Department.

Building 772-1F

The sprinkler system for Building 772-1F is hydraulically designed for light hazard as shown in the Fire Hazards Analysis for Building 772-1F (Ref. 31) except for the control room (rm 146) which is hydraulically designed for Ordinary Hazard Group 1. The fire systems, in addition to being normally powered, can receive standby electrical power from the Building 772-1F standby diesel generator. The fire alarm system panels also contain a battery backup power supply.

Building 772-4F

The sprinkler system for Building 772-4F is hydraulically designed for ordinary Hazard Group 2 occupancy as shown in the Fire Hazards Analysis for Building 772-4F (Ref. 32). The fire detection and alarm systems, in addition to being normally powered, can receive standby electrical power from the Building 254-9F standby diesel generator. The fire alarm system panel also contain a battery backup power supply.

CONTROL OF COMBUSTIBLE GASES/LIQUIDS AND COMBUSTION PRODUCTS

Buildings 772-F and 772-1F

The AHU duct smoke detector/process upset interlock for Building 772-F prevents smoke and other combustion products from being drawn into the building from the outside.

Supply units duct smoke detector interlock for Building 772-1F prevents smoke and other combustion products from being drawn into the building from the outside.

In Building 772-1F, propane is used for laboratory operation in single 20-pound portable cylinders. Due to the in-place procedures, training, and administrative controls, the potential for a fire or explosion resulting from propane is minimal. Chapter 3 of this SAR provides an analysis of propane explosions.

Building 772-4F

There are no specific features in this building that are intended to control the smoke, heat, and flame of a fire. However, the ventilation system may be manually operated to exhaust smoke to the outside. While procedures do not exist for using the ventilation system for smoke removal, a possible consequence is plugging of the filters with smoke particles. In addition, there are no restrictions on the use of portable smoke removal blowers by the SRS Fire Department.

Since there are no combustible gases, explosive gases, or toxic contaminants that could be impacted by or result from a fire in this building, there are no specific controls within the building to control such materials.

MANUAL FIREFIGHTING

As a backup to the fire protection systems provided in these buildings, the SRS Fire Department has three fully staffed and equipped fire stations. The stations are located in the Administration-700 Area, at the junction of Roads C and 5 near N Area, and at the 100-L Area, each about 5 miles or less away from F-Area.

SRS Fire Department firefighters are not assisted by building personnel in fighting fires. However, building personnel may attempt to extinguish an incipient fire after the SRS Fire Department has been notified, as long as the fire is not in an area where there is known transferable contamination.

PROTECTION OF ELECTRIC CABLES AND CIRCUITS

Electrical cables and circuits in the computer room (Building 772-F), are protected by a sprinkler system at the ceiling and below the raised floor. In addition, all circuits in Buildings 772-F, 772-1F, and 772-4F are equipped with overcurrent protection devices for fire prevention. For

these buildings, there is no electric circuitry that is essential for the safe shutdown of the buildings or for firefighting.

2.7.8.3 System Evaluation

Buildings 772-F, 772-1F, and 772-4F do not contain Safety Class equipment.

2.7.8.4 Inspection and Testing

Periodic inspection and testing of the fire protection systems are performed in accordance with approved site level procedures by the appropriate SRS organizations.

Routine inspection and minor maintenance of the fire detectors, alarms, and suppression equipment are performed by the appropriate SRS personnel who are fully qualified in this task and trained in the operation, circuitry, and functioning of the fire protection equipment. Chapter 12 of this SAR discusses the procedures and training programs.

2.7.8.5 Personnel Qualification and Training

Manual 2Q delineates required personnel qualifications and training (Ref. 25).

2.8 UTILITY DISTRIBUTION SYSTEMS

2.8.1 ELECTRICAL POWER

The function of the electrical power and distribution system is to provide electricity for operating the various support and auxiliary systems in the F/H Lab. In the event of a loss of normal power, standby diesel power is provided to operate essential equipment and standby lighting.

The standby electrical power systems in the F/H Lab are currently identified on drawings, equipment labeling, and other systems as emergency power systems. However, none of the systems meet National Electric Code emergency electrical power specifications or Safety Class requirements. The various accident consequence analyses take no credit for any emergency electrical power systems. When the F/H Lab configuration management technical re-baselining effort is complete, all of these systems will be identified properly as standby electrical power systems.

2.8.1.1 Power Sources and Major Components

The electrical power and distribution system in Buildings 772-F, 772-1F, and 772-4F consists of the following:

- Standby diesel engines and associated generators
- Automatic transfer switches
- 480-volt MCCs
- Transformers
- Distribution panels
- Disconnect switches
- Lighting
- Receptacles
- Feeder cables/wires to various equipment

NORMAL ELECTRICAL POWER

Savannah River Site and F-Area Distribution

Three-phase, 115- kilovolt (Kv), 60-hertz electric power is supplied to F Area. Power is routed through three interconnected substations. The normal area power is taken from a loop, with power coming from either direction in the loop at the discretion of the Power Department dispatcher in the 300/700 Area.

The F-Area substation, 251-F, is located north of Building 772-1F. Two transformers reduce the line voltage to 13.8 kV and feed the area supply loop.

Building 772-F Distribution

Figure 2.8-1 provides a single-line diagram of electrical power for Building 772-F. The original distribution system for Building 772-F was designed and installed in accordance with the Du Pont engineering standards in effect at the time of construction. Normal power is supplied to Building 772-F from two substations, 252-2F and 252-46F, located northwest of the facility. From Substation 252-2F, two 750- kilovolt-ampere (kVA) oil-filled transformers provide 480-volt, three-phase power to Building 772-F MCCs and distribution panels. A transformer from Substation 252-2F also supplies 120-volt, single-phase power for instrument panels and alternate power for a lighting panel. Substation 252-46F provides 480-volt, three-phase power, by way of an oil-filled 2,500-kVA transformer, to MCCs in Buildings 772-F and 772-4F, and Building 707-7F. MCCs with important equipment in Building 772-F are also supplied with standby electrical power from diesel generators 1 and 2. Table 2.8-1 shows the equipment configuration for normal power.

Building 772-4F Distribution

Figure 2.8-1 provides a single-line diagram of electrical power for Building 772-4F. The distribution system in Building 772-4F was designed and installed in accordance with the requirements of DOE Order 6430.1A and the following (Ref. 6):

- National Electric Code
- National Electrical Manufacturer's Association
- National Fire Protection Association

Power is routed to the building components by way of two MCCs and distribution panels located in the electrical room at the southeast corner of the facility. Both MCCs are fed from separate breakers in Substation 252-46F. MCC 2 and a distribution panel are also fed standby electrical power from the Building 254-9F diesel generator by way of an automatic transfer switch. Table 2.8-1 shows the equipment configuration for normal power.

Building 772-1F Distribution

Figure 2.8-2 shows a single-line diagram of electrical power for Building 772-1F. The distribution system in Building 772-1F was designed and installed in accordance with the National Electric Code engineering standards in effect at the time of construction. The main switchgear and 480-volt MCCs in Room 102 are supplied power from substation 252-28F which consists of two 2,000-kVA oil-filled pad-mounted transformers located outside and adjacent to Room 102. Each transformer typically serves about half the building load but is sized to permit connection of the whole building by way of a key interlock-controlled tie breaker, should a transformer fail or require maintenance. Essential equipment in Building 772-1F is supplied

with standby electrical power from one of three MCCs by the diesel generator for Building 772-1F. Table 2.8-1 shows the equipment configuration for normal power.

STANDBY ELECTRICAL POWER

Buildings 772-F and 772-4F

In the event of a loss of normal power, diesel generators support selected equipment and systems that provide confinement control and egress safety (i.e. exhaust fans, lighting). Diesel generators 1 and 2 are rated up to 175 kilowatt (kW) each and are located on the service floor to provide power for support equipment in Building 772-F (except the main exhaust fans). Each diesel has a 100-gallon fuel tank located inside Building 772-F next to the service ramp door. A 300-kW rated diesel generator located inside Building 254-9F and its 500-gallon fuel tank are located on the west side of Building 772-F. The generator provides power for essential equipment in Building 772-4F, including two of the main exhaust fans. Only one main exhaust fan in Building 772-4F can operate on diesel power at a time. In the event of a total loss of power failure, battery-powered emergency lights are located throughout the buildings to provide egress lighting.

Figures 2.8-1 and 2.8-2 provides a single-line diagram of the buildings' electrical power supply. In addition (not shown on Figures 2.8-1 and 2.8-2), an uninterruptible power supply is provided in Building 772-F for a spectrometer in lab module 174. Table 2.8-2 lists the primary equipment supplied with standby electrical power.

Building 772-1F

Backup power is provided by a 415-kW rated diesel generator in compliance with the requirements specified in the Energy Research and Development Administration Manual, Appendix 6301, Part I (Ref. 33). The standby diesel is located on the north side of airlock 101. Fuel for the diesel engine is stored in a 500-gallon outside tank. Table 2.8-2 lists the primary equipment supplied with standby electrical power. In the event of a total loss of power, battery-powered emergency lights are provided throughout the facility to provide egress lighting.

The automatic switching gear system starts the diesel motor when the normal power supply fails. A load sequencing system provides balanced load starting, and a block heater is included in the design to ensure reliability. Figure 2.8-2 provides a single-line diagram of the standby electrical power supply in Building 772-1F.

2.8.1.2 Grounding

BUILDING 772-F

The Building 772-F grounding system was designed and installed in accordance with the Du Pont engineering standards in effect at the time of construction. For example, Substation 252-46F is grounded in accordance with Du Pont engineering standards E11P, E13P, and B34S of WSRC-TM-92-10-1 (Ref. 34).

BUILDING 772-1F

Within Building 772-1F, the MCCs and switchgear in Room 102 are grounded to the underground grounding loop surrounding Building 772-F. The two transformers located to the east and outside Room 102 are also grounded to the Building 772-1F grounding loop. The pump house for Building 772-1F is grounded to a conductor (which includes ground rods) that is buried below grade around the perimeter of the buildings. The pump house no longer functions as a pump house and is now used for storage.

BUILDING 772-4F

The exhaust stack, HEPA filters, fans, and other major components in Building 772-4F are grounded to a conductor (which includes ground rods within ground wells) that is buried below grade around the perimeter of the building. Additionally, each corner of the Building 772-4F slab is grounded to the underground conductor.

2.8.1.3 Lightning Protection

Buildings 772-F, 772-1F, and 772-4F do not incorporate any design features specifically for the purpose of lightning protection.

2.8.1.4 Safety Considerations and Controls

In the event of a loss of normal power to F/H Lab facilities, standby diesel generators will automatically start and supply standby electrical power to essential equipment and lighting as previously described. While the diesels are running, they are periodically checked in accordance with procedures (Ref. 17). During this time the units are observed for leaks, abnormal operation, and conformance with operational parameters. After normal power is restored and conditions permit, the facility equipment is realigned to its normal configuration as listed in Table 2.8-12.

To maintain a high degree of assurance that the diesel generators will start and accept their required loads, they are periodically tested according to procedure under both load and no-load conditions.

No-load tests are performed at least once every 4 months to ensure that the diesel generators will start and run. Load tests are performed annually to ensure operation of electrical interlocks, including automatic transfer switch operation, during a loss of normal power simulation.

Standby electrical power is not identified as a Safety Class system and is not seismically rated. Standby electrical power is not required for safe shutdown. Standby electrical power allows for safe evacuation and limits contamination concerns by providing backup power to the ventilation system.

A loss of normal electrical power would result in the temporary shutdown of all equipment normally in operation until normal power is restored or standby electrical power is provided. Standby electrical power would be supplied only to essential equipment for the following:

- Continued building ventilation
- OGE
- HAD and LAD exhaust
- Instrument air supply
- Process water pumps
- Alarm systems
- Emergency lighting for personnel egress

This condition would not necessitate the evacuation of building personnel.

A loss of both normal and standby electrical power would result in a loss of all essential equipment until normal or standby electrical power is restored. Any electrical system malfunction, resulting in the loss of standby electrical power, would require the evacuation of nonessential personnel since building ventilation would be severely hampered. However, the loss or severe curtailment of building ventilation would not result in undue releases of nuclear materials or hazardous chemicals to the environment or in a complete shutdown of ventilation because all ventilation systems fail in the safe (or open) position. The fail-safe position of dampers and flow control valves allows for continued natural circulation through the various HEPA filters. The following equipment would fail in the safe (or open) position:

- Main exhaust dampers
- OGE dampers
- Instrument air dampers
- HLDE and LLDE dampers (fail closed)
- Air monitoring exhaust dampers

The following equipment will continue providing limited service:

- Reserve breathing air available for personnel egress from plastic suits and hoods
- Emergency egress lighting powered from batteries

- Fire alarm system powered from batteries

Instrumentation and controls for the normal and standby electrical power and distribution system for the F/H Lab are not classified as Safety Class, do not interface with a safety system, and are not required to achieve safe shutdown. Standby electrical power is provided to ensure a high degree of reliability, uninterrupted service, and continuity of F/H Lab operations to support the 200-F and 200-H separations and waste management areas.

2.8.2 COMPRESSED AIR AND GASES

This section discusses the compressed air systems, and cylinder gas systems, associated with Buildings 772-F, 772-1F, and 772-4F.

2.8.2.1 Major Components and Operating Characteristics

The function of the compressed air systems during normal operation in Buildings 772-F and 772-1F is to provide filtered, dried, compressed air to the laboratories and the various pneumatic instruments and controls used in other support systems. Typical examples include the following:

- AHU controls
- Main exhaust controls
- Purge lines and ejectors for the sumps and transfer tanks
- Building services panel board switches

These systems are not required to remain functional to ensure personnel and environmental safety relative to the release of radioactive materials.

BUILDING 772-F

Building 772-F is equipped with two compressed air systems: the instrument air system and the breathing air system. Additionally, the building uses a compressed gas system, which consists of manifolds and headers that distribute gases from vendor-supplied compressed gas cylinders or a central liquefied gas tank.

Instrument Air System

The Buildings 772-F, 772-1F, and 772-4F instrument air is supplied by two instrument air compressors located in Building 772-F mechanical equipment room

Instrument air is supplied to operate various control instrumentation and to perform laboratory sample analyses. The major components of the F/H Lab instrument air system are as follows:

- One water-cooled air compressor

- One air-cooled air compressor with standby electrical power
- Two receiver tanks
- Two dryers
- Pressure safety valves
- Pressure control valves
- Low pressure alarms
- Piping and valves
- Control instrumentation

Portions of the instrument air system are housed in Building 772-4F to provide control for the main exhaust system and service floor exhaust system.

The Building 772-F instrument air system has one header that is piped to the Building 772-F service floor, where two pressure reducing stations reduce the air pressure from the compressors to a constant 80 pounds per square inch, gage (psig). From the 80 psig reducing stations, the instrument air header splits into several smaller headers that supply the Building 772-F AHU control systems, the transfer tank controls, and the control system for the 772-4F exhaust systems. Another reducing station reduces the air pressure supplied by the compressors down to 20 psig. The 20 psig header supplies the HAD/LAD flow control valves.

Breathing Air System

The F/H Lab breathing air system provides Grade D quality breathing air during normal operation to personnel working in areas with atmospheres potentially hazardous to employee health. The F/H Lab breathing air system is not required to remain functional during an abnormal event.

The major components of the F/H Lab breathing air system are as follows:

- One air-cooled breathing air compressor
- One water-cooled breathing air compressor
- Three receiver tanks
- One 16-bottle high-pressure cylinder manifold
- Breathing air distribution manifolds
- Pressure safety valves
- Pressure control valves
- Low pressure alarms
- Control instrumentation

The two F/H Lab breathing air compressors are located outside, on the west side of Building 772-F. These compressors supply high-pressure (100-120 psig) grade D quality air to the Building 772-F breathing air distribution manifolds.

Reserve breathing air capacity is provided by the three receiver tanks and the one 16-bottle high-pressure cylinder manifold.

Standby electrical power is not provided to the breathing air system. Portable compressors connected to the distribution system may also provide breathing air.

Compressed Gas System

The compressed gas system provides service to the laboratories during normal operation and is not required to remain functional during an abnormal event.

The compressed gas system consists of a liquefied gas tank, compressed gas cylinders, pressure regulators, pressure relief devices, shutoff valves, manifolds, headers, distribution piping, restricting orifices, and associated instrumentation.

Compressed gases from vendor-supplied compressed gas cylinders are distributed throughout the building and are dispensed through standard manifolds and headers.

The compressed gas cylinders and manifolds are located in a storage shed south of the sample passageway on the east wall of Building 772-F as shown in Figure 2.3-1. This storage area is enclosed with a wire fence and can be entered through a door from the sample passageway or through a gate on the east side. A protective canopy, concrete pad, and structure are included in the design of the shed to secure and support full, empty, and spare cylinders.

In general, oxygen cylinders in storage are separated from combustible materials (especially oil, grease, or reserve stocks of acetylene, carbide, or other fuel gas cylinders) by a minimum of 20 feet or by a fire-resistant partition at least 5 feet high having a minimum fire rating of 30 minutes.

Vendor-supplied cylinders are connected to specified manifolds in the storage shed that control the flow of gases to service headers in the building. Each manifold enters the building at the east side of the service floor and connects to the building headers. The headers run north and south in an overhead pipe rack over the east and west walkways on the service floor. The service lines to each laboratory module rise from the header to pipe spaces, with cutoff valves located in each lab module.

Individual cylinders of compressed gas (e.g., oxygen, nitrogen, helium, and argon) are used inside the building at approved locations for special applications. Portable 20-pound propane bottles are used at only three laboratory locations. Large cylinders of propane and methane gas are no longer used.

Argon gas for the labs is supplied via a liquefied cryogenic tank located outside at the northwest corner of Building 772-F. The liquefied argon passes through a vaporizer, which expands the liquid argon into a gas. The argon gas system consists of orifice plates, regulators, pressure

relief valves, shutoff valves, headers, distribution piping and associated instrumentation. The main header for the argon supply runs north and south on the east side of the service floor. Individual branches supply argon to the labs from the service floor.

All SRNS breathing air manifolds are designed to connect to valves on breathing air cylinders that are incompatible with valves on other cylinders of gases such as nitrogen, helium, and argon.

BUILDING 772-1F

Building 772-1F has two compressed air systems: an instrument air system and a breathing air system. Building 772-1F also contains a vacuum system and a compressed gas system. These systems are discussed in the following sections.

Instrument Air System

The Buildings 772-F, 772-1F, and 772-4F instrument air is supplied by two air compressors located in the Building 772-F mechanical equipment room

Instrument air is supplied to operate various control instrumentation and to perform laboratory sample analyses. The major components of the F/H Lab instrument air system are as follows:

- One water-cooled instrument air compressors
- One air-cooled instrument air compressor with standby electrical power
- Two receiver tanks
- Two dryers
- Pressure safety valves
- Pressure control valves
- Low pressure alarms
- Piping and valves
- Control instrumentation

The Building 772-1F instrument air system has one 80 psig distribution header and one 20 psig distribution header. The 80 psig header supplies the instrument air for the Building 772-1F supply and exhaust systems, while the 20 psig header supplies the instrument air for the Building 772-1F laboratory modules, the 772-1F diesel shed and gas cylinder storage deluge sprinkler systems.

Breathing Air System

The F/H Lab breathing air system is utilized to provide grade D quality breathing air during normal operation to personnel working in areas with atmospheres hazardous to employee health. The F/H Lab breathing air system is not required to remain functional during an abnormal event.

The major components of the F/H Lab breathing air system are currently as follows:

- One air cooled breathing air compressor
- One water cooled breathing air compressor
- Three receiver tanks
- One 16-bottle high pressure cylinder manifold
- Pressure safety valves
- Pressure control valves
- Low pressure alarms
- Piping and valves
- Control instrumentation
- Breathing air distribution manifolds

The two F/H Lab breathing air compressors are located outside on the west side of Building 772-F. These compressors supply high pressure (100-120 psig) grade D quality air to the Building 772-F breathing air system. The Building 772-1F breathing air system is supplied from the Building 772-F breathing air system. Reserve breathing air capacity is provided by the three receiver tanks and the one 16-bottle high pressure cylinder manifold.

Standby electrical power is not provided to the breathing air systems. Breathing air may also be provided by portable compressors connected to the distribution system.

Compressed Gas System

The compressed gas system in Building 772-1F is similar to the one in Building 772-F. The liquefied argon tank system from Building 772-F and the gas cylinder storage areas with appropriate storage racks, manifolding, and pressure-reducing valving and distribution piping are provided for various gases including nitrogen, argon, and breathing air. Piping headers run above the corridor ceilings and into the laboratory chases. Flammable gases in the gas cylinder storage area are separated by fire-rated structures. A protective canopy, concrete pad, and structure are included in the design to secure and support both full and empty cylinders.

The only locations where propane can be is used within Building 772-1F is in Rooms 120 and 125 for the purpose of planchet and electrode flaming. Propane gas is contained in a 20-pound portable cylinder located in the cabinet below the work station. Spare cylinders are stored at the gas cylinder storage shed.

Vacuum System

The vacuum system consists of two vacuum pumps, a 120-gallon receiver tank and associated controls located in the northeast corner of the filter room. The controls will start one pump when

the pressure falls below a predetermined setpoint and automatically switches the lead pump after each cycle.

The primary function of the instrumentation installed in the vacuum service system is to provide continuous monitoring of vacuum pressure and automatic starting and stopping of the vacuum pumps to meet system demand. Standby electrical power is not provided to the vacuum service system.

BUILDING 772-4F

Instrument air is used in this building for leak testing and for operating the pneumatic controls in the ventilation system. This air is provided by a tap-in to the Building 772-F instrument air system on the service floor of the building. There are no high-pressure gases stored or distributed within Building 772-4F. Therefore, there are no compressed air safety considerations or controls for this building.

Vacuum service is not provided to Building 772-4F. Therefore, there are no vacuum supply safety considerations or controls for this building.

2.8.3 STEAM SUPPLY AND DISTRIBUTION

2.8.3.1 Major Components and Operating Characteristics

The steam supply systems supply saturated steam for use in the HVAC, and LAD systems in Buildings 772-F and 772-1F. Steam is not supplied to Building 772-4F. The major components of the steam system include the distribution piping, pressure-reducing valves, pressure relief valves, isolation valves, expansion joints, and condensate traps. The steam supply systems are not required to remain functional during an abnormal event.

BUILDING 772-F

Steam pressure from the area header at 325 psig enters the building through the east wall of the service floor. The steam line splits at the point of entry to feed two pressure-reducing valves (one on standby), which reduce the steam pressure to approximately 90 psig. These two lines reconnect and form the 90-psig steam header. One 90-psig steam supply line branches off at this point and runs north down the east side of the service floor to supply the high- and low-activity transfer tank jets, the transfer tank cell sump jets, and the Shielded Area A sump jet.

The main 90-psig steam header extends 30 feet west to a second set of pressure-reducing valves, which reduce steam pressure to 15 psig. From this second reducing station, steam at 15 psig is supplied to the preheat/reheat coils and humidity controls in the AHUs and to several unit heaters. The headers are equipped with condensate traps, which drain to the flash tanks and then to the sumps located on the service floor.

BUILDING 772-1F

Steam pressure from the area header at 325 psig is supplied to the building at the west wall of the mechanical room. A pressure-reducing valve located outside the building reduces the steam pressure to 15 psig and supplies it to the preheat/reheat coils and humidifiers in the Supply Units (SUs) and the booster steam heat exchanger.

2.8.4 WATER SUPPLY SYSTEMS

2.8.4.1 Major Components and Operating Characteristics

BUILDING 772-F

Building 772-F is supplied with three water systems: the domestic water system (hot and cold), the process water system (hot and cold), and the deionized water system. Section 2.7.8 discusses fire protection water.

None of the water systems are required to remain functional during abnormal conditions.

Domestic Cold Water

The function of the domestic water system is to provide cold water to the following:

- Wash basins and toilets in the restrooms
- Water basins and showers in the change rooms
- Sinks in the janitors' closet and lunchroom
- All drinking fountains
- Process water system
- Safety shower and eyewash stations

The domestic cold water system in Building 772-F consists of the distribution piping, isolation valves, and pressure instrumentation. The domestic cold water system interfaces with the process water system.

Water is supplied from the area domestic water system. The water enters the building through two lines located on the west side of the service floor. A crossover line provides service to the east side of the building. Lines to each individual service extend from this main header.

The domestic water system contains instrumentation to monitor system pressure.

Standby electrical power is not provided to the domestic water system.

Domestic Hot Water

The domestic hot water system provides hot water to the change room and restroom water basins, change room showers, janitor closet sinks, and lunchroom sink. The domestic hot water system includes the electric hot water heater, distribution headers, and isolation valves.

Standby electrical power is not provided to the domestic hot water heater.

Domestic hot water flows from the electric hot water heater to a header in an overhead pipe rack that traverses the service floor on the west side north and south.

Process Cold Water

The function of the process water system is to supply water to the following:

- Breathing air compressor closed loop cooling system
- Instrument air compressor closed loop cooling system
- Laboratory module sinks
- Flush tanks for the HAD system
- Radiohood water jets

The process water system is supplied by the area domestic water system through a set of backflow preventers

The process water headers consist of two lines that traverse the service floor south to north on both the east and west sides of the building in a pipe rack suspended over the main walkways. Crossovers are provided to each header. Services from the header extend to the equipment supplied on both floors of the building.

The process water system contains instrumentation to monitor system pressure.

Standby electrical power is not provided to the process water system.

Process Hot Water

The process hot water system provides hot water to the laboratory module sinks, decontamination sinks, janitor closets, and RCO decontamination rooms.

The process hot water consists of an electric water heater, recirculating pump, expansion tank, distribution piping and instrumentation. The water heater is located on the service floor. The process hot water headers consist of two lines that traverse the service floor in both the east and west pipe racks. The recirculation pump maintains a continuous flow of water through the headers located on the service floor in order to sustain a constant water temperature throughout the system.

Standby electrical power is not provided to the process hot water system.

Deionized Water

The deionized water system is not in service. Points of use systems are installed in lab modules.

BUILDING 772-1F

Building 772-1F is supplied by three water supply systems: the domestic water system (hot and cold), the process water system (hot and cold), and the deionized water system. These systems operate similarly to the same systems in Building 772-F. None of the water systems are required to remain functional during abnormal conditions.

Domestic Cold Water

The domestic water system in Building 772-1F consists of the distribution piping and isolation valves. The domestic cold water system supplies the process water system.

The domestic water supply enters the building in the first-floor mechanical room. Domestic water is supplied to the building from the 200-F-Area system. Standby electrical power is not provided to the domestic water system.

Domestic Hot Water

The domestic hot water system supplies hot water to the restroom water basins and janitor closet sinks. The domestic hot water tanks are located in the janitor closets (Rooms 112 and 154).

Process Cold Water

The process water system is supplied by the domestic water system and consists of the main storage tank, two water pumps, the distribution headers, and control instrumentation. Backflow preventers also serve as a system boundary point between the domestic water system and the process water system.

Process water originates at the main storage tank located in the mechanical room. This tank is supplied by the domestic water system through a float-operated valve. Two water pumps, each capable of supplying 100% of the demand, pump the water from the main makeup tank to the process water header. Services from the headers extend to the equipment supplied on the main floor. The process water system is isolated from the domestic water system by either one of two safety features: a physical break between the domestic water supply line and the storage tank or backflow preventers installed in the supply headers.

Standby electrical power is not provided to the process water system.

Process Hot Water

Process hot water is supplied to the laboratory module sinks, the decontamination sinks, the janitors' closet, and the RCO decontamination rooms.

Process hot water is heated in an electric hot water tank located in the mechanical room and distributed through insulated piping.

Standby electrical power is not provided to the process hot water system.

Deionized Water

The deionized water system receives water from the domestic water header through a backflow preventer. The water is used in preparing reagent, rinsing glassware and pipets, and performing specified laboratory procedures. The system design features a dual-bed deionizer capable of supplying mineral-free water on a continuous basis.

Standby electrical power is not provided to the deionized water system.

BUILDING 772-4F

The only water supply for this building is the fire water system, which is discussed in Section 2.7.8.

2.8.5 COOLING WATER SYSTEMS

2.8.5.1 Major Components and Operating Characteristics

The function of the chilled water system in Buildings 772-F and 772-1F is to provide chilled water to the six AHUs located on the roof of Building 772-F and the two SUs located in the second-floor mechanical room of Building 772-1F. Chilled water is used to condition the supply air for the buildings. Chilled water for Buildings 772-F and 772-1F is supplied from the F-Area Central Chilled Water Plant, Building 285-3F. There is no chilled water supplied to Building 772-4F.

The chilled water system is not required to remain functional during an abnormal event.

The process water system, although not considered a cooling water system in this analysis, supplies cooling water to the instrument air compressors and the breathing air system in Building 772-F.

BUILDING 772-F

Chilled Water

The Building 285-3F, F-Area Central Chilled Water Plant, supplies chilled water to major facilities in F-Area including Building 772-F. From the central plant, there are two main headers supplying chilled water to Building 772-F. These two headers enter the 772-F Mechanical Equipment Building and are connected to the existing chilled water system headers in the building. One chilled water header supplies AHUs 1, 4, and 5, while the other header supplies AHUs 2, 3, and 6. The chilled water return header runs parallel to the supply and is routed back to the Building 285-3F F-Area Central Chilled Water Plant.

Equipment associated with the original chiller system in Building 772-F such as refrigeration machines and chilled water pumps have been blanked off and are abandoned in place. Related systems such as cooling tower water have also been disconnected from the chilled water system and abandoned in place.

BUILDING 772-1F

Chilled Water

The Building 285-3F, F-Area Central Chilled Water Plant, supplies chilled water to major facilities in F-Area including Building 772-1F. From the central plant, a main header supplies chilled water to Building 772-1F. This main header enters the 772-1F Mechanical Equipment Room 103 on the first level and is connected to the existing chilled water system header in the building. Chilled water is supplied from this header to the Building 772-1F ventilation system supply units SU-1 and SU-2 located in the second floor Mechanical Equipment Room 201. The chilled water return header runs parallel to the supply and is routed back to the Building 285-3F F-Area Central Chilled Water Plant.

Equipment associated with the original chiller system in Building 772-1F such as refrigeration machines and chilled water pumps have been blanked off and are abandoned in place. Related systems such as cooling tower water have also been disconnected from the chilled water system and abandoned in place. The heat recovery system that previously used return water from the chilled water system condensers is still in operation. The heat recovery system now uses hot water heated by the heating steam system through the booster steam heat exchanger.

BUILDING 772-4F

There are no cooling water systems located in Building 772-4F.

2.8.6 SAFETY COMMUNICATION AND ALARM SYSTEMS

2.8.6.1 Communication Systems

Various communication systems service Buildings 772-F, 772-1F, and 772-4F. These systems are discussed in the following sections.

BUILDING 772-F

Seven separate communication systems are provided in Building 772-F so that constant contact can be maintained among personnel within the building and among personnel in the building and in other areas of the site.

Instrumentation and controls installed in the communication systems transmit, receive, distribute, channel, amplify, and broadcast audio messages and transmit and receive electronic information.

All communication systems can be independently activated and used by authorized personnel.

Universal Telephone/Data System

A universal wiring system is installed throughout the facility with outlets located in all offices, lab modules, and other locations as needed. Each of the outlets includes a standard telephone outlet and a computer data outlet for networking.

Building Page Systems

Two building page systems provide for communication throughout 772-F, 772-1F and 772-4F. Each system is composed of amplifiers, speakers, and microphones. The control station with amplifiers is located on the Shielded Area A west wall, of the service floor. The amplifiers are connected together to serve the entire building.

Area Public Address System

The area public address system is used to broadcast messages to all personnel in F Area. The speakers are located in all personnel and utility corridors on and in selected areas of the 772-F service floor. This system is to be used for official business only.

Two-Way Portable Radios

Hand-held two-way radios are used by building operations personnel for communication during routine and abnormal operations.

Personal Pagers

Personal radio-activated pagers are worn by all designated essential personnel. Use of the pagers allows for both onsite and offsite instant telephone communication with essential personnel during unusual operations.

Electronic Mail

A computer network provides electronic mail services to all site areas. Building 772-F is connected by way of a fiber optic link, and most offices within the facility are connected to the system.

Laboratory Information Management System

Laboratory analytical sample results are transmitted to production customers in H Area by way of a computer-controlled laboratory information management system. Results are verified by supervision before transmission.

BUILDING 772-1F

Six separate communication systems are provided in Building 772-1F so that constant contact can be maintained among personnel within the building and among personnel in the building and in other areas of the site. A handset intercom system is also used by personnel.

Universal Telephone/Data System

A universal wiring system is installed throughout the facility with outlets located in all offices, lab modules, and other locations as needed. Each of the outlets includes a standard telephone outlet and a computer data outlet for networking.

Building and Area Page System

A building page system, which is tested weekly, provides communication throughout 772-F, 772-1F and 772-4F. Building speakers are connected to the area public address system that can be used to broadcast messages to all personnel in F Area. Messages can be transmitted to the facility directly by dialing a local access number.

Two-Way Portable Radios

Hand-held two-way radios are used by building operations personnel for communication during routine and abnormal operations.

Personal Pagers

Personal radio-activated pagers are worn by all designated essential personnel. Use of the pagers allows for both onsite and offsite instant telephone communication with essential personnel during unusual operations.

Electronic Mail

A computer network provides electronic mail services to all site areas. Building 772-1F is connected by way of a fiber optic link, and most offices within the facility are connected to the system.

Laboratory Information Management System

Laboratory analytical sample results are transmitted to production customers in H Area by way of a computer-controlled laboratory information management system. Results are verified by supervision before transmission.

BUILDING 772-4F

Building 772-4F is tied into the existing public address system in Building 772-1F, with speakers capable of being heard while the building exhaust fans are in normal operation. A telephone is provided inside the electrical room. An intercom system is also used in Building 772-4F.

2.8.6.2 Fire Alarms

Buildings 772-F, 772-1F, and 772-4F are each protected by their own separate fire alarm system, which reports to the SRSOC. Manual initiation of a fire alarm in these facilities can be accomplished by using one of the fire alarm boxes as shown in Figure 2.7-1. Section 2.7.8 describes the fire alarm system in more detail.

2.8.6.3 Warning and Evacuation System

The F-Area public address system is the primary system for conveying warning and evacuation information and instructions. Alert and attack warning signals are initiated at Patrol Headquarters and broadcast over the entire system. Similar systems are in place in each area of SRS.

2.8.6.4 Nuclear Incident Monitors

Nuclear incident monitors are not required for Buildings 772-F, 772-1F, and 772-4F because the mass controls used for the buildings ensure that fissile material inventories are below the quantities established in DOE Order 420.1B (Ref. 36).

2.8.6.5 Radiation and Stack Monitoring Systems

Section 2.7.7 describes the radiation and stack monitoring systems associated with Buildings 772-F, 772-1F, and 772-4F.

2.8.7 MAINTENANCE SYSTEMS

2.8.7.1 Major Components

Due to the diverse nature of the analyses performed in these buildings, any broken equipment is repaired in place, where practical. Specific to Building 772-F are an Electrical and Instrument maintenance shop and a contamination area mechanical maintenance shop, both of which are located on the service floor. Additionally, Room 149 of Building 772-F is used for special RCO studies and provides space for the storage and light maintenance of portable, hand-held RCO instruments. Similarly, Room 118 of Building 772-1F is used for light maintenance of RCO instruments. Maintenance chases are provided between Building 772-1F rooms for access to services for laboratory containment units and bench cabinets.

In Building 772-1F the area dedicated for the repair of the manipulators that are used in conjunction with the shielded cells within the building is located next to the shielded cell CRs (Number 143).

2.8.8 HAZARDOUS CHEMICAL STORAGE AND HANDLING SYSTEMS

2.8.8.1 Buildings 772-F and 772-1F

An inventory of hazardous chemicals typically used to conduct the analytical operations in Buildings 772-F and 772-1F is provided in hazard assessment documents WSRC-TR-94-0114 and WSRC-TR-94-0115, respectively (Ref. 13, 14). Based on these hazard assessment documents, a computer database of all chemicals used in F/H Lab is maintained and is updated as new chemicals are evaluated via either the hazard assessment document screening process or the Unreviewed Safety Question process. Additionally, negligible quantities of chlorine, hydrogen sulfide, and sulfur dioxide are handled in Building 772-F. Because the inventory of the majority of the chemicals in these buildings is kept low, the consequences of a chemical release are expected to be insignificant. Most releases of chemicals involve spills or the dropping of containers. The low energy involved in such accidents precludes significant dispersal of the material.

Other than the handling of hazardous materials by hand as necessary for analytical purposes, these materials are also handled in gloveboxes, radiobenches, and radiohoods. Spilled liquids and solids in the hoods, radiobenches, and gloveboxes will remain in the area because of the engineered confinement systems.

Spills that occur outside the radiohoods, radiobenches, and gloveboxes could involve radioactive contamination. Operators are trained to respond quickly by evacuating personnel or by implementing emergency procedures that include donning protective devices. The facility ventilation systems remove contaminated air, pass it through the filtering systems, and trap the airborne particles, preventing the spread of contaminated materials.

2.8.8.2 Building 772-4F

Hazardous chemicals are not stored or handled in this building.

2.9 AUXILIARY SYSTEMS AND SUPPORT FACILITIES

2.9.1 CONTROL ROOM

The primary function of the Building 772-1F CR is to provide the following:

- Office space for on-shift use by the Shift Operations Manager (SOM)
- Space for operating and maintaining the laboratory systems panels
- Space for the computer terminal connected to the main computer in Building 772-F and the terminal connected to the multiplexed alarm system

The CR is located in Room 146 in Building 772-1F. The CR is furnished with common office furniture. Normal occupancy of the CR is one to four or more persons. The CR may also serve other F-Area facilities.

The CR houses the main alarm panel boards. The panel boards contain the alarms for the various auxiliary and support systems, including the fire protection alarms and radiation and contamination alarms. Typical alarms annunciated on the alarm panel are as follows:

- Loss of normal electrical power
- Low main exhaust flow to operate laboratories
- Low exhaust flow in service level
- Loss of instrument air
- Low exhaust flow in transfer tank rooms
- Low exhaust flow in shielded areas
- Low vacuum pressure in service floor exhaust suction ducts
- Low exhaust flow in main exhaust fans
- Low stack flow
- Loss of flow in stack activity air monitor blower
- Low pressure in stack activity air monitor RCO monitoring piping
- Low pressure in HLDE and LLDE piping
- Standby generator running (transfer from normal to standby electrical power)
- High beta activity stack alarm
- High alpha activity stack alarm
- Low flow stack samples

Portable fire extinguishers are also installed to protect the CR.

During normal operations, the CR monitors and directs laboratory analytical processes by way of the communication system. Abnormal events are communicated promptly to all building personnel by way of any of the communication systems described in Section 2.8.6. Although essential to maintain uninterrupted normal operations and to monitor operating parameters during abnormal conditions, the CR is not considered a safety-related area because primary process systems used to prevent and mitigate the spread of radiation and contamination are not dependent upon the CR to perform their functions. However, an unplanned loss of the CR may lead to a process upset and a temporary facility shutdown to protect personnel and equipment from unmonitored operations. The F/H Lab can be maintained in a process upset condition (shutdown) by using the local control panels throughout the building and on the service floor.

2.9.2 SAMPLING SYSTEMS

The sample process systems in the F/H Lab do not extract samples directly from primary or auxiliary systems. The sample process systems receive samples for analysis from other areas throughout SRS primarily from the separations and waste management facilities, and other external customers, as detailed in Section 2.5. Thus, there are no direct sampling systems installed within the F/H Lab, except for samplers/detectors in the air monitoring system (see Section 2.7).

2.9.3 WATER TREATMENT AND DISPOSAL SYSTEMS

The following paragraphs describe the handling of nonradioactive effluents at Buildings 772-F, 772-1F, and 772-4F. Chapter 9 of this SAR discusses the handling operations and controls exercised to ensure that no hazardous material is added to the nonhazardous streams.

2.9.3.1 Sanitary Waste

BUILDING 772-F

Sanitary waste is removed by two gravity-flow drain lines that terminate at the sewage disposal station in F Area. Waste is pumped to the Central Sanitary Waste Treatment Facility for treatment.

Two gravity-flow sanitary lines discharge sewage into the main sewer line at the west side of the building. Equipment served by the sanitary lines include the following:

- Commodes
- Showers
- Urinals
- Water fountains
- Individual waste basins

- Wash basins
- “Clean” floor drains

Sanitary waste from the change rooms is discharged into a 4-inch-diameter pipe, which flows from east to west. The pipe connects to the main sewer line approximately 120 feet from the southwest corner of the building. The capacity of this line is approximately 65 gallons per minute.

A sanitary waste sewer pipe that serves the north section of Building 772-F has been taken out of service due to a collapse in the line outside the building.

BUILDING 772-1F

Sanitary waste is discharged to the F-Area sanitary waste collection system and pumped to the Central Sanitary Waste Treatment Facility for treatment. Operation of the sanitary waste system in Building 772-1F is similar to that in Building 772-F.

BUILDING 772-4F

This building does not generate sanitary wastes and, therefore, does not incorporate a sanitary sewage system.

2.9.3.2 Chemical Waste

BUILDINGS 772-F AND 772-1F

Although these buildings do not contain a chemical waste treatment system, the disposal of certain chemical effluent is covered by laboratory procedures. The High Activity Drain (HAD) system does not receive waste while the Low Activity Drain (LAD) system does receive waste and complies with the appropriate compliance documentation with the Effluent Treatment Plant (ETP). The LAD system may receive excess/expired laboratory chemicals/standards once they have completed a review by the facility Environmental Compliance Authority (ECA) or designee. This review ensures that no Resource Conservation and Recovery Act (RCRA) listed waste is disposed to the LAD system and the facility's compliance with ETP requirements is maintained. Any RCRA listed waste would be dispositioned via the site's hazardous/mixed waste programs.

A more detailed description of effluent handling is provided in Chapter 9.

BUILDING 772-4F

This building lacks nonradioactive chemical wastes and, therefore, lacks a chemical waste treatment system.

2.9.3.3 Other Nonradioactive Effluents

BUILDING 772-F

Used process water is collected in five drain sumps that are located on the service floor. The sumps collect water from the following:

- "Clean" water drains
- Hot water tanks
- Steam condensate traps
- Breathing air compressor cooling water
- Instrument air compressor cooling water
- Service ramp drainage
- AHU drains

Each sump pit is equipped with float-operated switches that operate two electrical sump pumps that discharge the water into the process sewer F-Area segregated cooling water system.

BUILDING 772-1F

In Building 772-1F, the steam condensate from the steam reducing station, the steam booster heat exchanger, the supply unit(s) steam coils, and the unit heaters are sent to the sanitary sewer. In addition, the condensate from the chilled water coils in the supply units is sent to the sanitary sewer.

BUILDING 772-4F

This building does not generate nonradioactive effluents.

2.9.4 PRODUCT HANDLING SYSTEMS

Buildings 772-F, 772-1F, and 772-4F provide analytical and support services. These buildings do not produce mainline "products" or "byproducts" unlike the facilities they support. Small quantities of analysis samples are received, handled, analyzed, stored, and routed for disposal and/or recovery as detailed in Section 2.5.

2.9.5 OCCUPATIONAL HEALTH FACILITIES

Occupational RCO facilities available at SRS are in compliance with Title 10 Code of Federal Regulations, Part 835, "Occupational Radiation Protection," and the regulations of the State of South Carolina (Ref. 35).

Personnel decontamination facilities are available in Building 772-1F. Personnel decontamination (e.g., decontamination of hands) can be performed in Room 149 of Building 772-F. Personnel decontamination facilities are not available in Building 772-4F.

More intensive treatment of a contaminated individual or a number of contaminated personnel is performed at Fort Gordon according to an agreement between the DOE and the U.S. Army. This agreement authorizes supplies, air and ground vehicles, personnel, and hospital beds to be available for emergency use.

Chapters 7 and 15 of this SAR provide a detailed description of worker safety programs and emergency response and health facilities.

2.10 REFERENCES

1. Building Code Requirements. Specification 3580, Project 8980, E.I. du Pont de Nemours and Company, Savannah River Plant, Aiken, SC, January 1951.

2. Structural Specification for Building Code Requirements. Site Structural Specification 7096, Rev. 2, E.I. du Pont de Nemours and Company, Savannah River Plant, Aiken, SC, November 1979.

3. Natural Phenomena Hazards Qualification of Buildings 772-F, 772-1F and 772-4F Structures, Systems and Components (SSCs). WSRC-TR-95-0080, Westinghouse Savannah River Company, Aiken, SC, April 1995.

4. Engineering Standards Manual General Requirements. WSRC-TM-92-10-1, BK-1, "Structural Design Criteria," Engineering Requirement 01060-02-R, Rev. 0, Westinghouse Savannah River Company, Aiken, SC, July 1992.

5. Kennedy, R.P., Short, S.A., McDonald, J.R., McCann, M.W., Murray, R.C., and Hill, J.R. Design and Evaluation Guidelines for the Department of Energy Facilities Subjected to Natural Phenomena Hazards. UCRL-15910, Lawrence Livermore National Laboratory, Livermore, CA, June 1990.

6. General Design Criteria. DOE Order 6430.1A, U.S. Department of Energy, Washington, DC, April 1989.

7. Facility Safety. DOE Order 420.1, Change 2, U.S. Department of Energy, Washington, DC,October 1996.

8. Natural Phenomena Hazards Design and Evaluation Criteria for Department of Energy Facilities. DOE-STD-1020-94, U.S. Department of Energy, Washington, DC, 1994.

9. Natural Phenomena Hazards Performance Categorization Guidelines for Structures, Systems, and Components. DOE-STD-1021-93, U.S. Department of Energy, Washington, DC, 1993.

10. Murdock, J.S. Environmental Evaluation Impact Analysis Production Control Facility - Building 772-1F. DPST-83-485, E.I. du Pont de Nemours and Company, Savannah River Plant, Aiken, SC, May 1983.

11. Project Specification No. 8299 - Site Work, Building Materials, Mechanical, Electrical, Instruments, Power, Heating and Ventilating for Building 772-1F - 200 F-Area - Production Control Facility. Project S4238, E.I. du Pont de Nemours and Company, Savannah River Plant, Aiken, SC, July 1983.

12. Technical Safety Requirements, Savannah River Site, F-Area Central Laboratory Facility, Buildings 772-F, 772-1F, and 772-4F. WSRC-TS-95-18, Westinghouse Savannah River Company, Aiken, SC.

13. Buildings 772-F and 772-4F of the Central Laboratory Facility. WSRC-TR-94-0114, Hazards Assessment Document DOE-STD-1027-92 Review, Westinghouse Savannah River Company, Aiken, SC, June 1994.

14. Central Laboratory Facility Building 772-1F. WSRC-TR-94-0115, Hazards Assessment Document DOE-STD-1027-92 Review, Westinghouse Savannah River Company, Aiken, SC, June 1994.

15. Analytical Laboratories CLAB Multi-Group Procedures. WSRC Procedure Manual L2-1, Westinghouse Savannah River Company, Aiken, SC.

16. American National Standards, NCS in Operations with Fissionable Materials Outside of Reactors. ANSI/ANS-8.1-1983, American Nuclear Society, 1998.

17. Support Systems Procedures for F-Area Analytical Laboratories. WSRC Procedure Manual L4.02, Westinghouse Savannah River Company, Aiken, SC.

18. Burchsted, C.A., Kahn, J.E., and Fuller, A.B. Nuclear Air Cleaning Handbook. ERDA 76-21, Energy Research and Development Administration, U.S. Department of Energy, Washington, DC, October 1979.

19. General Environmental Protection Program. DOE Order 5400.1, Change 1, U.S. Department of Energy, Washington, DC, June 1990.

20. Brynda, W.J., Scarlett, C.H., Tanguay, G.E., and Lobner, P.R. Nonreactor Nuclear Facilities: Standards and Criteria Guide. DOE/TIC-11603, Rev. 1, Science Applications International Corporation, La Jolla, CA, September 1986.

21. Standards/Requirements Identification Document. WSRC-RP-94-1268-0000, Westinghouse Savannah River Company, Aiken, SC.

22. Analytical Laboratory Standard Practices. WSRC Procedure Manual L2, Westinghouse Savannah River Company, Aiken, SC.

23. Respiratory Protection Manual. Manual 4Q1.6, Westinghouse Savannah River Company, Aiken, SC.

24. Safety and Health Department Air Effluent Monitoring Procedures (U). Manual 5Q1.5, Savannah River Nuclear Solutions, Aiken, SC.

25. WSRC Fire Protection Program Manual. Manual 2Q, Savannah River Nuclear Solutions, Aiken, SC.

26. Fire Hazards Analysis for 772-F Facility. F-FHA-F-00006, Rev. 6, Savannah River Site, Aiken, SC, June 2010.

27. Life Safety Code. NFPA 101, National Fire Protection Association, Quincy, MA, 2006.

28. National Electric Code. NFPA 70, National Fire Protection Association, Quincy, MA, 1990.

29. Standard for the Installation of Sprinkler Systems. NFPA 13, National Fire Protection Association, Quincy, MA, 1989.

30. Standard for Portable Fire Extinguishers. NFPA 10, National Fire Protection Association, Quincy, MA, 1990.

31. Fire Hazards Analysis for 772-1F Facility. F-FHA-F-00012, Rev. 5, Savannah River Site, Aiken, SC, June 2010.

32. Fire Hazards Analysis for 772-4F Fan House. G-FHA-F-00003, Rev. 3, Westinghouse Savannah River Company, Aiken, SC, May 2002.

33. Basic Design Section E Interior Electrical Systems. Energy Research and Development Administration Manual, Appendix 6301, Part I, "Basic Design Section E Interior Electrical Systems," Energy Research and Development Administration.

34. Engineering Standards Manual General Requirements. WSRC-TM-92-10-1, BK-1, "Structural Design Criteria," Engineering Requirement 01060-02-R, Rev. 0, Westinghouse Savannah River Company, Aiken, SC, July 1992.

35. Occupational Radiation Protection. Title 10 Code of Federal Regulations Part 835, U.S. Department of Energy, Washington, DC.

36. Facility Safety. DOE Order 420.1B, U.S. Department of Energy, Washington, DC, December 2005.

2.11 TABLES

Table 2.5-1 Typical Laboratory Analyses Conducted in the F/H Lab

- Acid/Base Determination by Titration
- Alpha by Counting/Spectrometry
- Anions by Ion Chromatography
- Anions by Ion Selective Electrode
- B/U/Pu Isotopics & U/Pu Concentration by Thermal Ionization Mass Spectrometry
- Beta/Gamma Counting
- Carbon Analysis
- Carbonate Determination by Titration
- Conductivity Analysis
- D_2O by Fourier Transform Infrared Spectroscopy
- Density Analysis
- Flash Point Analysis
- Free Acid Determination by Titration
- Free Hydroxide Determination by Titration
- Gamma by Counting/Spectrometry
- Hg by Cold Vapor Atomic Absorption Spectrometry
- Hotblock Dissolution Sample Preparations
- Interfacial Tension Analysis
- Liquid Scintillation Counting
- Moisture Analysis
- Np/Pu by Controlled-Potential Coulometry
- Np/U/Pu by Diode Array Spectrophotometry
- Organic in Aqueous Determination
- Organics by Gas Chromatography
- pH Analysis
- Process & Trace Metals by Inductively Coupled Plasma - Emission Spectrometry
- Radiochemical Separations by Rapid Ion Exchange
- Reduction/Oxidation Potential by Titration
- Shielded Cell Sample Preparations
- Turbidity Analysis
- U/Pu Isotopics & Trace Metals by Inductively Coupled Plasma - Mass Spectrometry
- Uranium by Davies-Gray Titration
- Uranium by Kinetic Phosphorescence
- Viscosity Analysis
- Visual Analysis

Table 2.8-1 Normal Configuration of Equipment

System	Normal Configuration
Building 772-F	
Air Handling Units	6 units operating
Off Gas Exhaust	2 fans operating, 1 on standby
High-Level Drain Exhaust	1 fan operating, 1 on standby
Low-Level Drain Exhaust	1 fan operating, 1 on standby
Instrument Air	1 compressor on lead, 1 on standby
Air Monitoring Exhaust	1 fan operating, 1 on standby
Process Water	1 pump operating, 2 on standby
Sump Pumps	10 pumps available
Building 772-1F	
Air Handling Units	2 units operating
Main Exhaust	2 fans operating, 1 on standby
Off Gas Exhaust	2 fans operating, 1 on standby
High-Level Drain Exhaust	1 fan operating, 1 on standby
Air Monitoring Exhaust	1 fan operating, 1 on standby
Cell Exhaust	1 fan operating, 1 on standby
Process Water	1 pump operating, 1 on standby
Building 772-4F	
Main Exhaust	3 fans operating, 1 on standby
Service Floor Exhaust	1 fan operating, no standby fan
Air Monitoring Exhaust	1 blower operating, 1 in manual

Table 2.8-2 Equipment Supplied by Standby Electrical Power

Building 772-F

Off Gas Exhaust Fans No. 2 and 3
Low-Level Drain Exhaust Fans No. 1 and 2
High-Level Drain Exhaust Fans No. 1 and 2

Instrument Air Compressor No. 005
Air Monitoring Exhaust Fans No. 1, 2, and 3

Elevator No. 1
Sump Pumps No. 1 through 10
Standby Power and Lighting Panels
Instrument Power Panel (instrument air)
Mass Spectrometer
Emission Spectrometer

Building 772-1F

Main Exhaust Fans EF-1A and EF-1B
Off Gas Exhaust Fans EF-2A and EF-2B
High-Level Drain Exhaust Fans EF-4A and EF-4B
Air Monitoring Exhaust Fans EF-3A and EF-3B
Deleted
Deleted
Deleted
Process Cold Water Pumps P-7 and P-8
Standby Power Panels EA, EB, and EC
Instrument Power Panels A, B, and C
Cell Exhaust Bypass Damper

Building 772-4F

Main Exhaust Fans No. 2 and 4
Air Monitoring Blowers No. 1 and 2
Standby Power Panel EPP-4

2.12 FIGURES

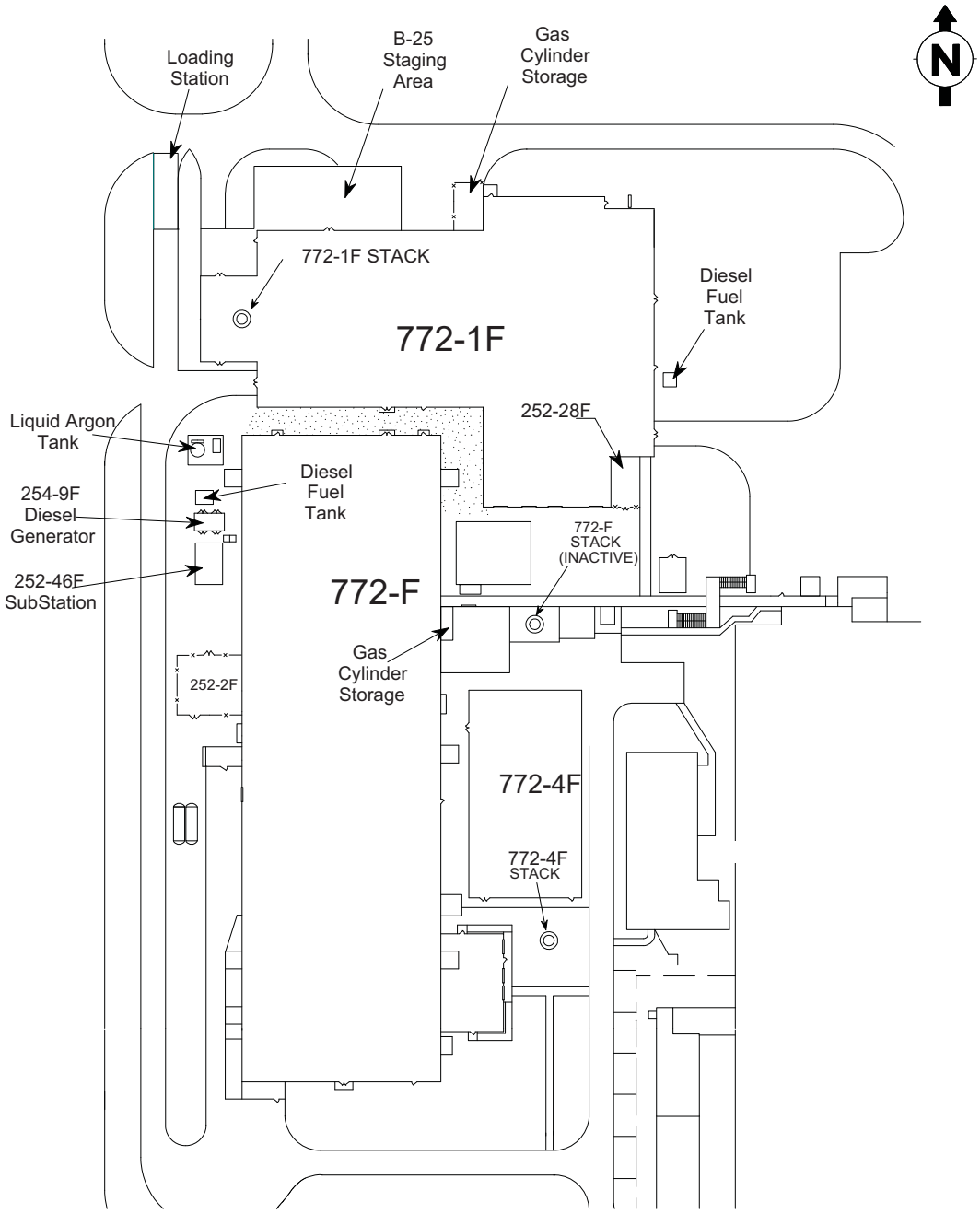

Figure 2.3-1 Relative Locations of Buildings 772-F, 772-1F, and 772-4F

Figure 2.3-2 Deleted

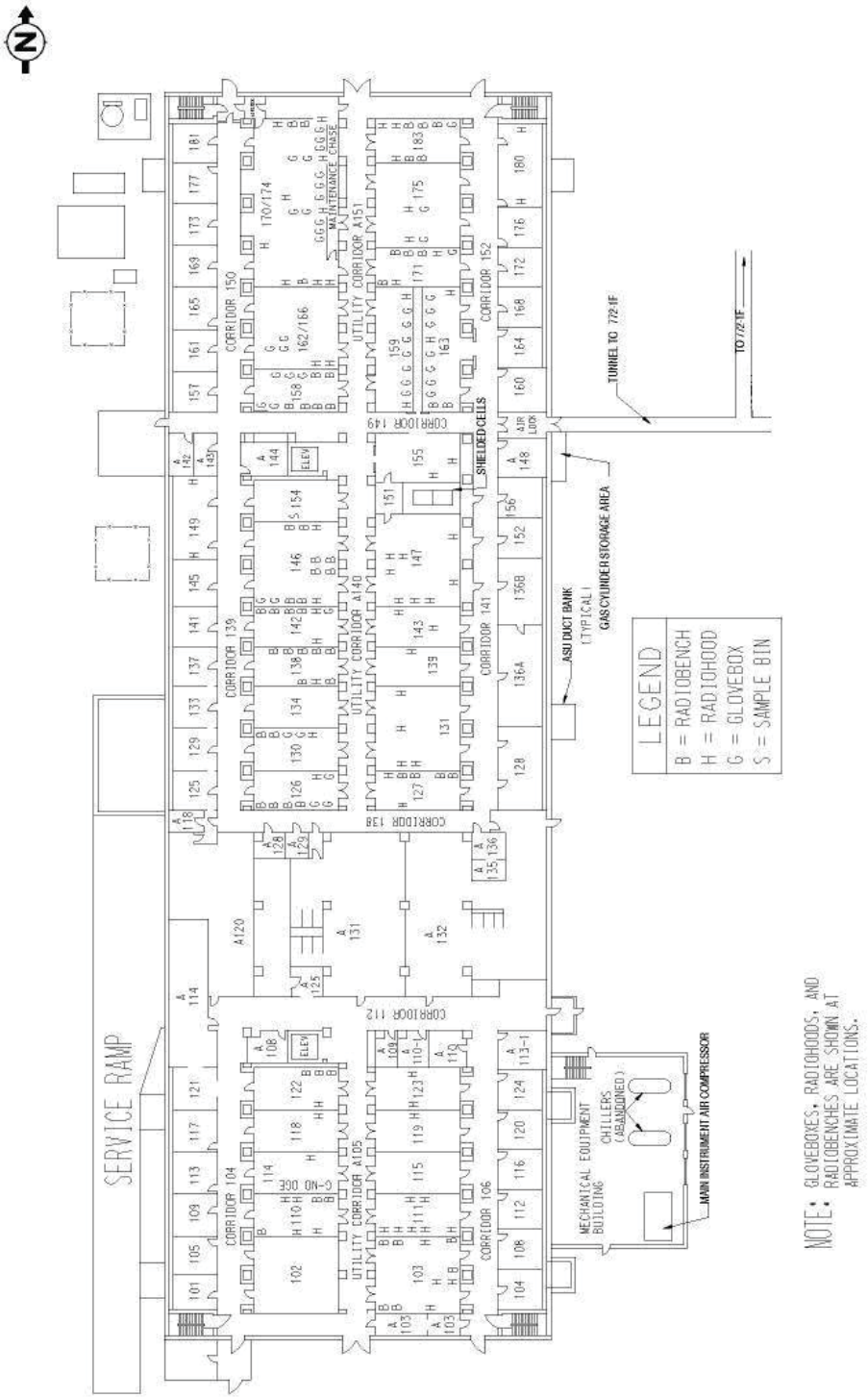

Figure 2.4-1 Plan View of Building 772-F (Main Floor)

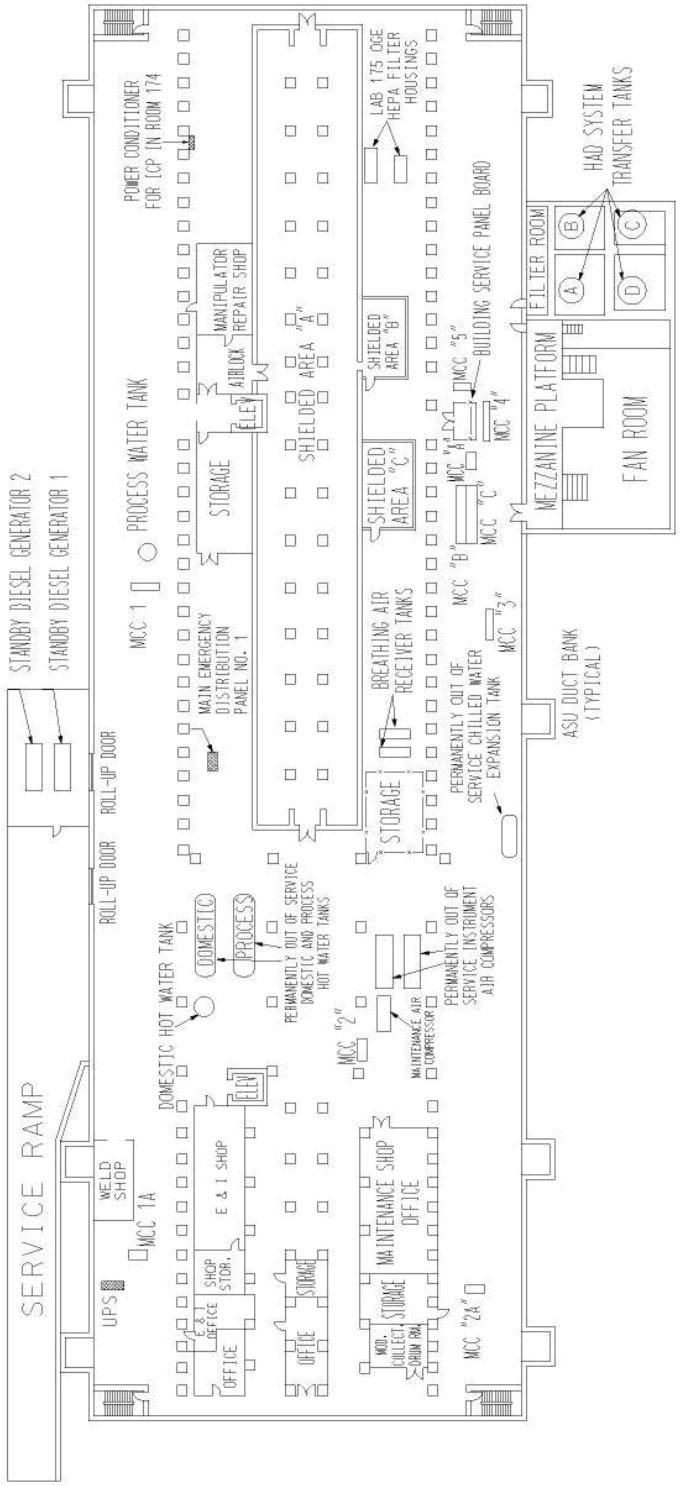

Figure 2.4-2 Plan View of Building 772-F (Service Floor)

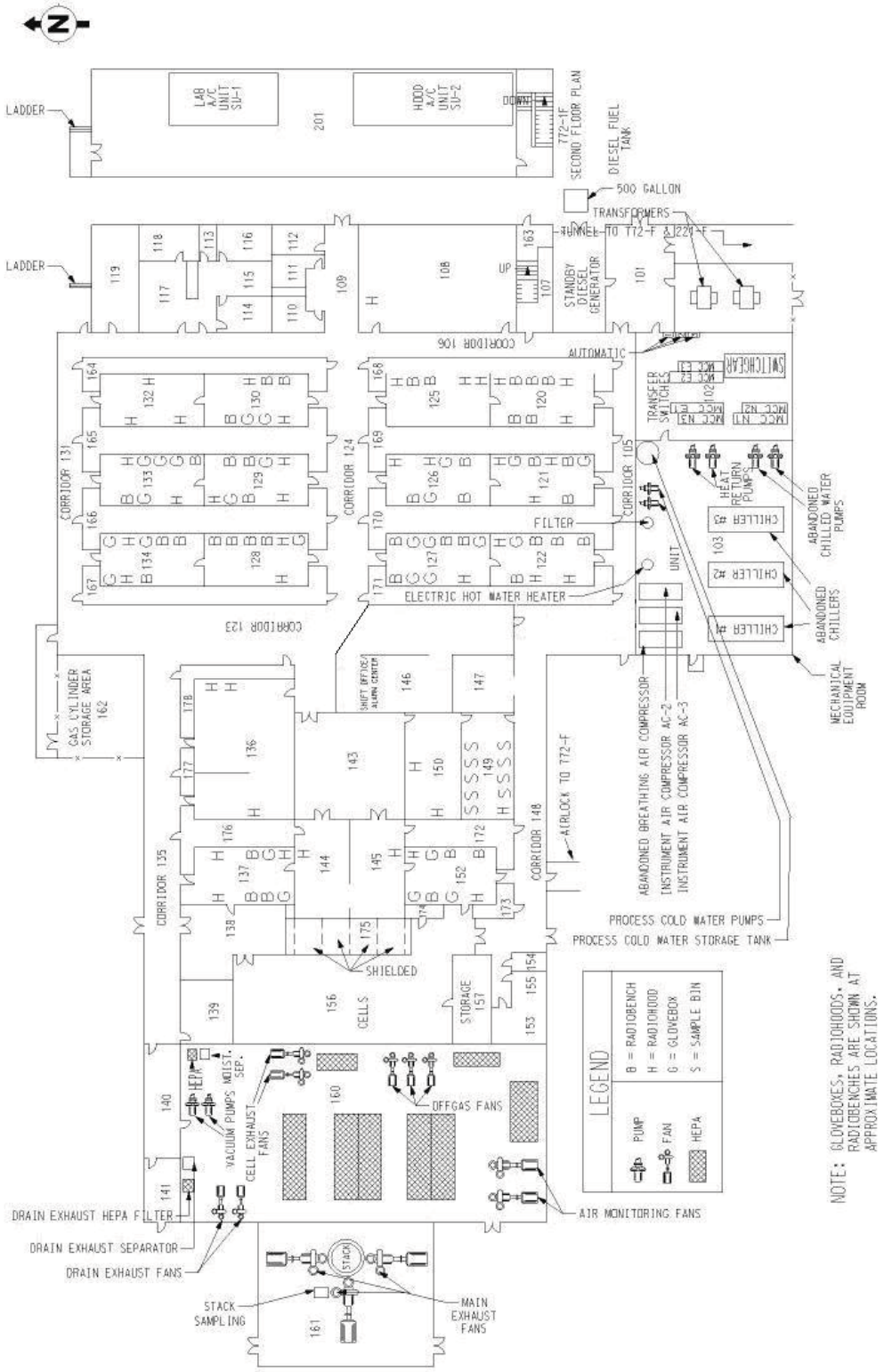

Figure 2.4-3 Plan View of Building 772-1F

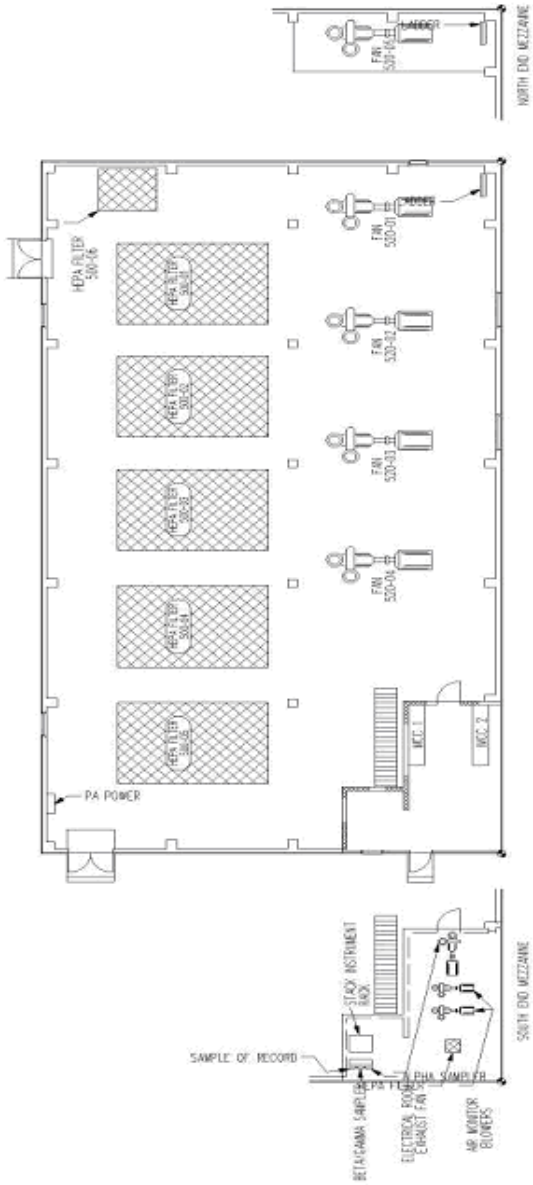

Figure 2.4-4 Plan View of Building 772-4F

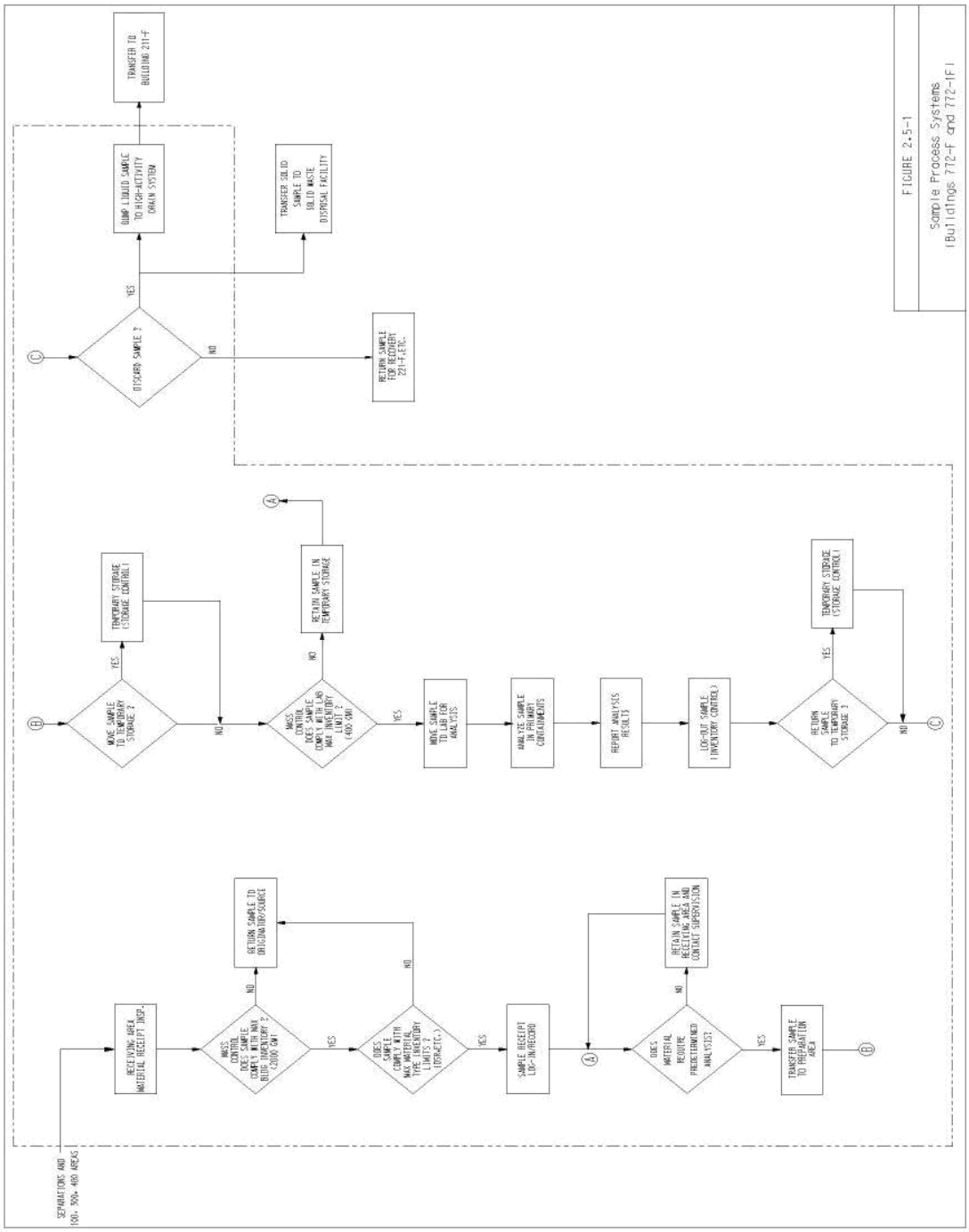

Figure 2.5-1 Sample Process Systems (Buildings 772-F and 772-1F)

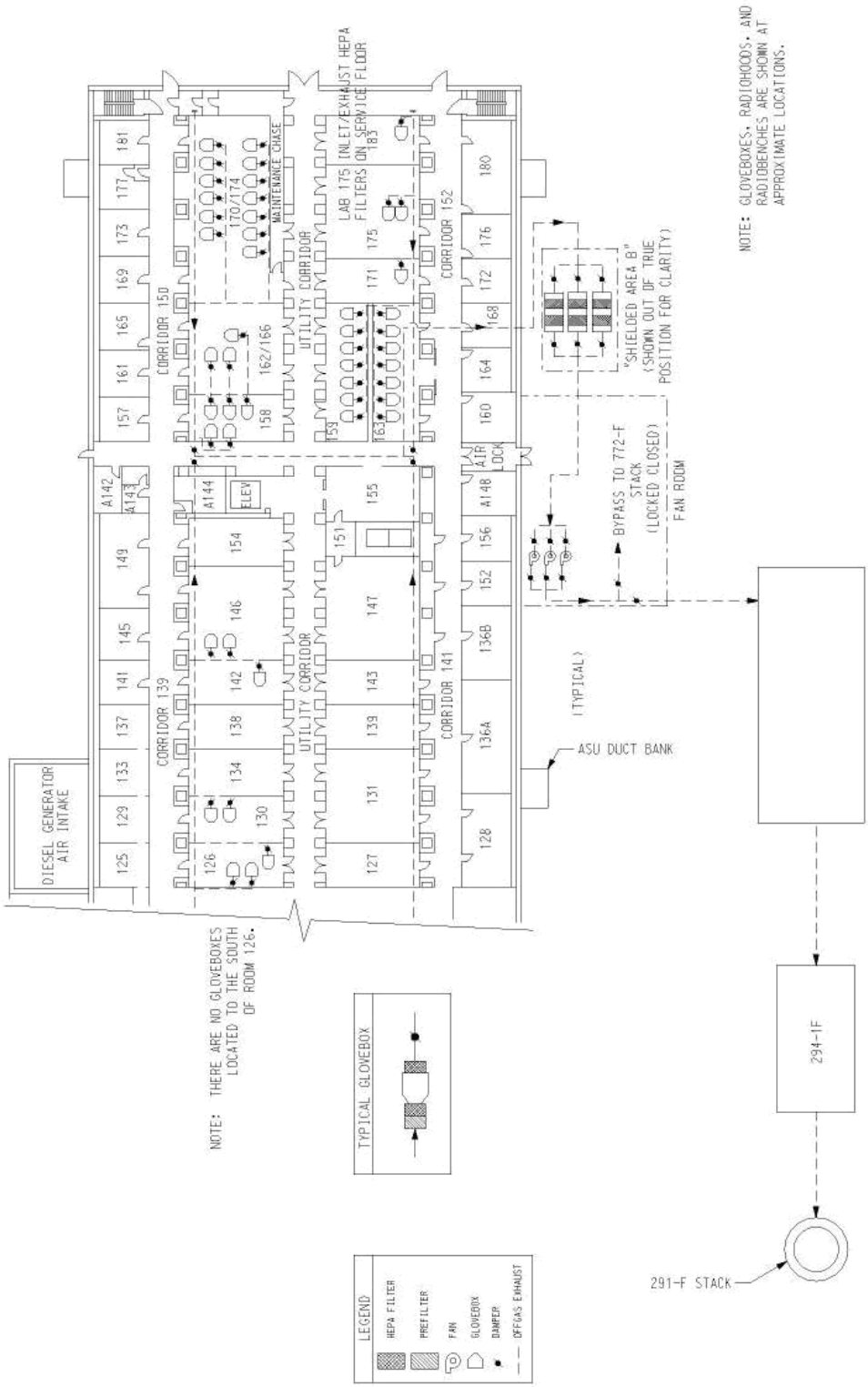

Figure 2.5-2 Off Gas Exhaust System - Building 772-F

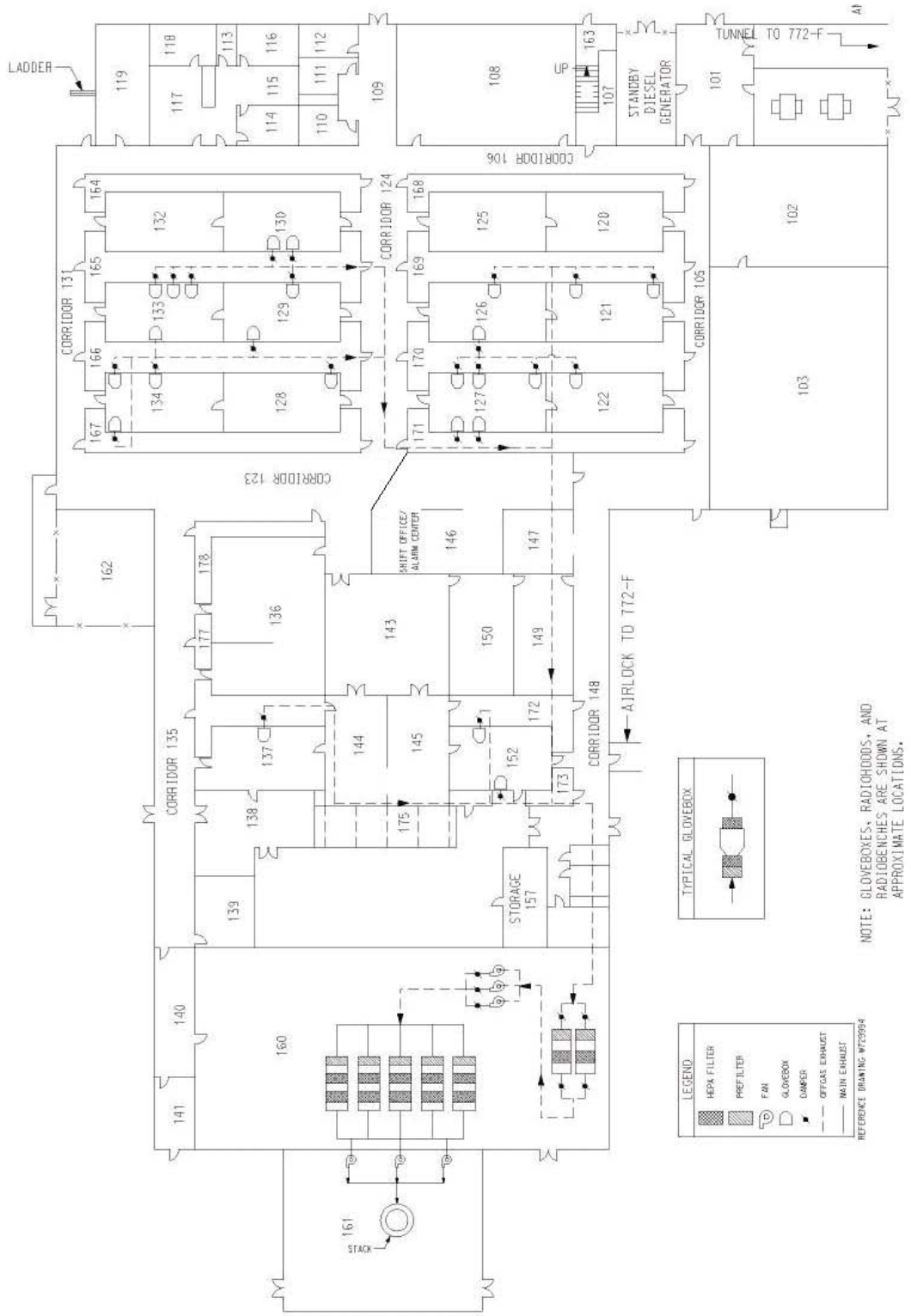

Figure 2.5-3 Off Gas Exhaust System - Building 772-1F

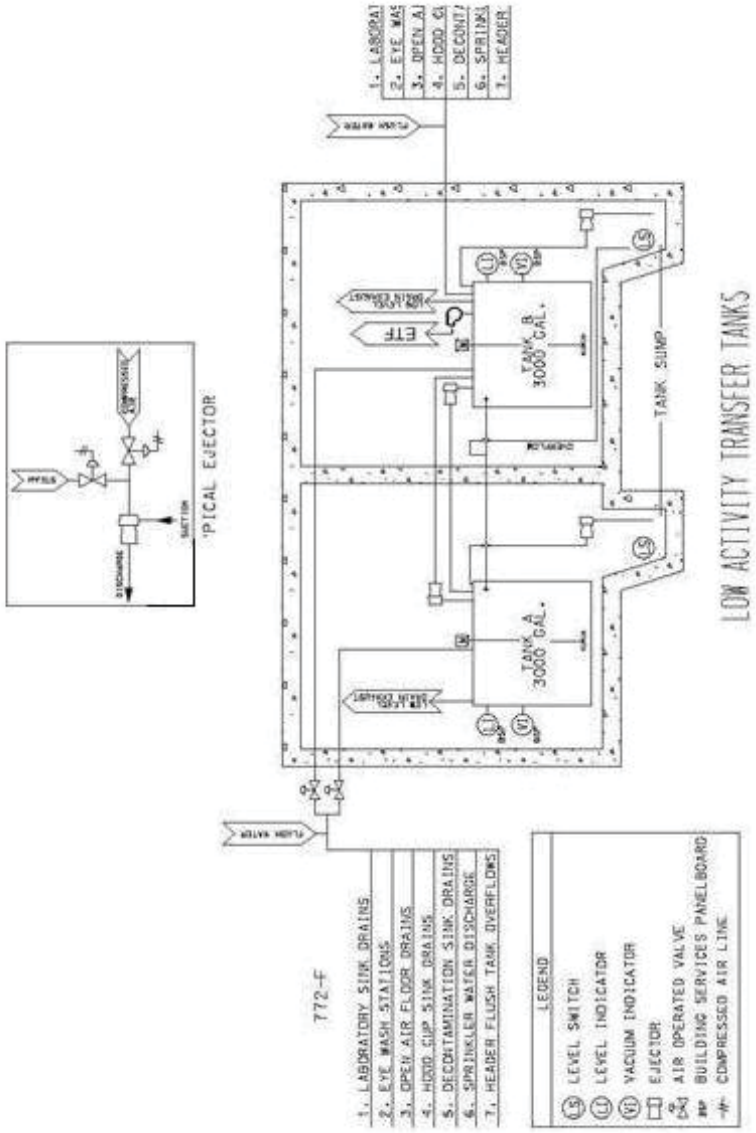

Figure 2.5-4 Low-Activity Drain System

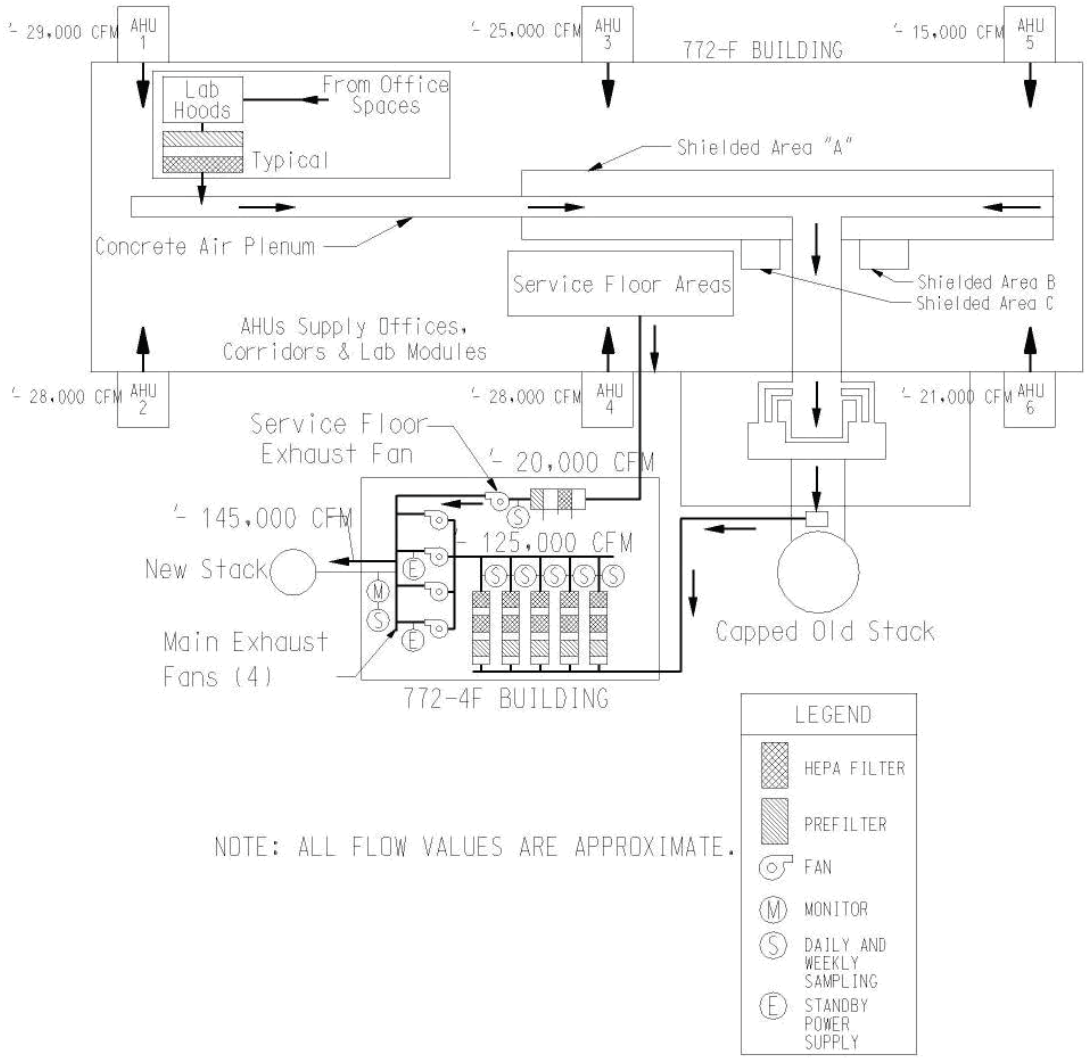

Figure 2.6-1 Main Exhaust System for Buildings 772-F and 772-4F

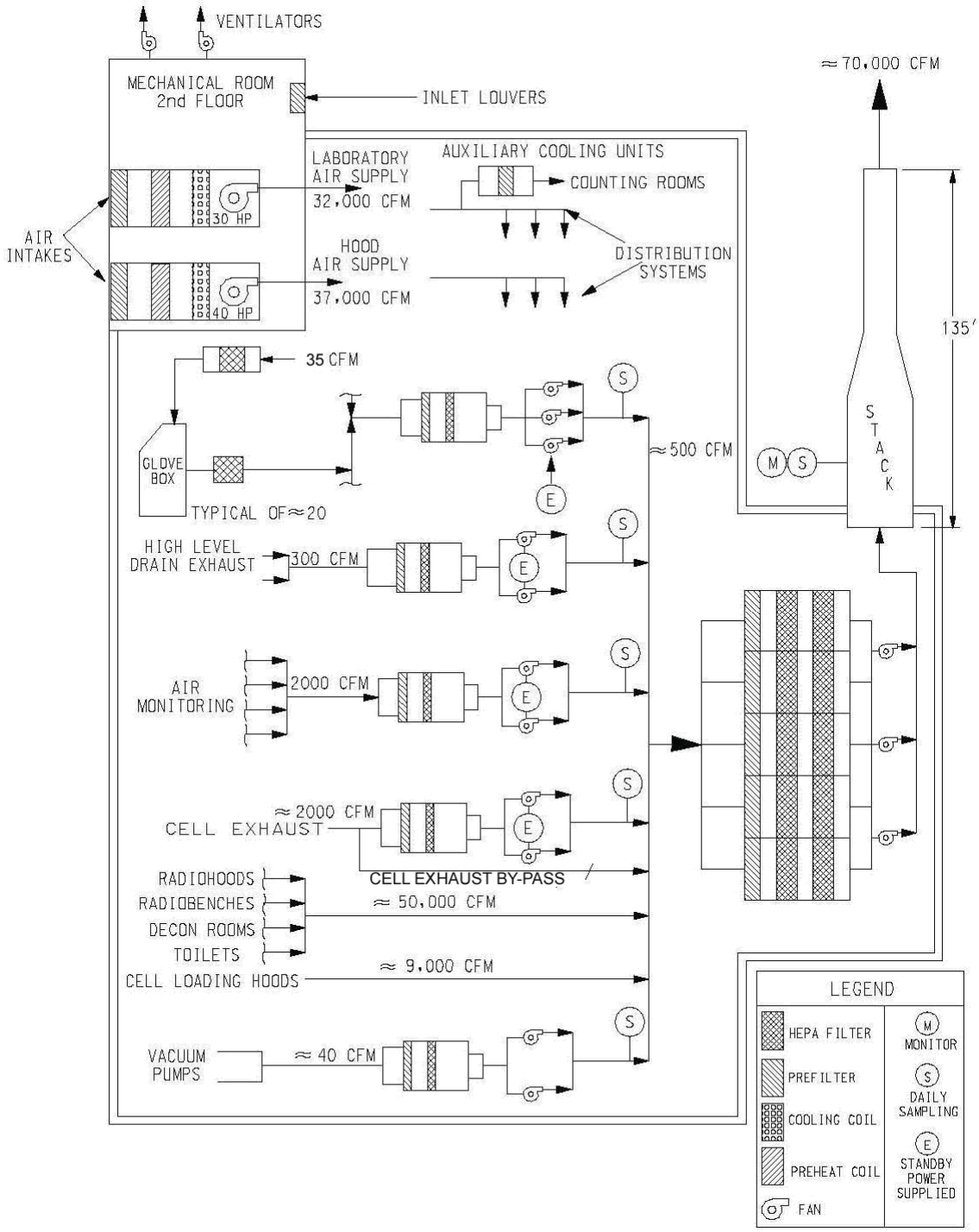

Figure 2.6-2 Main Exhaust System for Building 772-1F

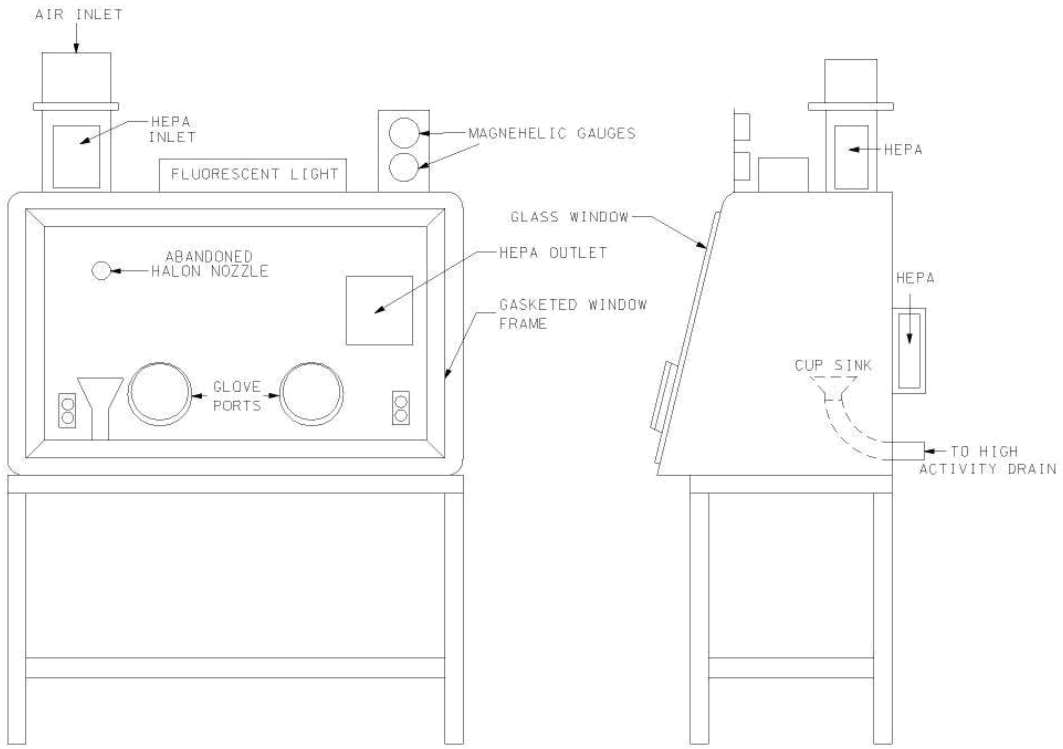

Figure 2.6-3 Typical Glovebox

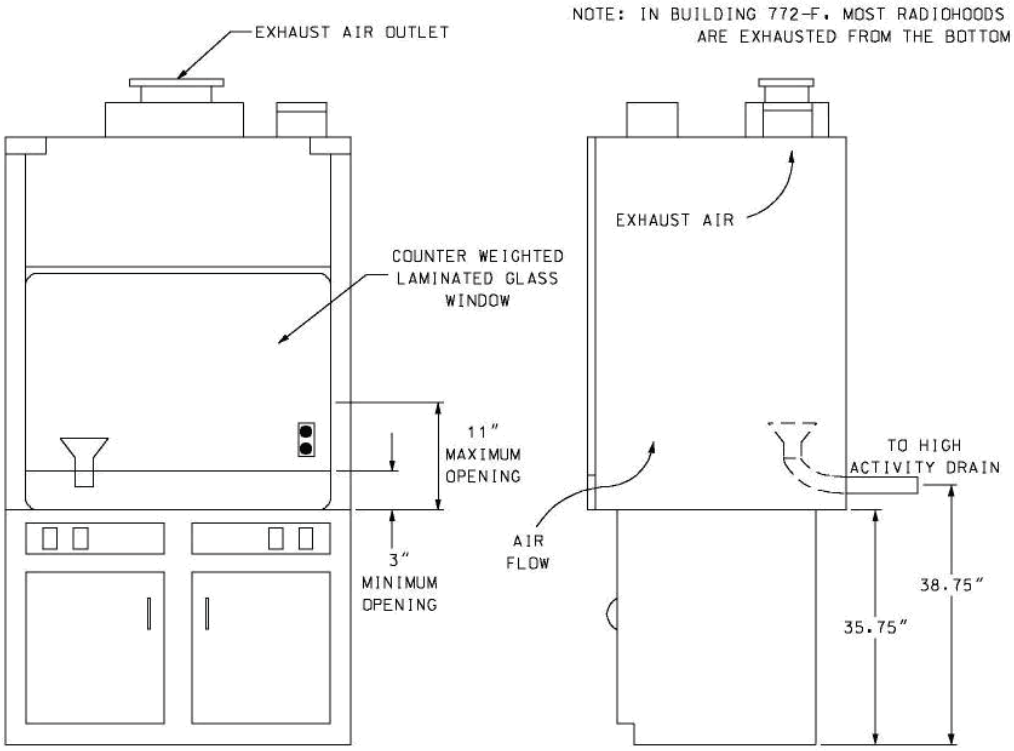

Figure 2.6-4 Typical Radiohood

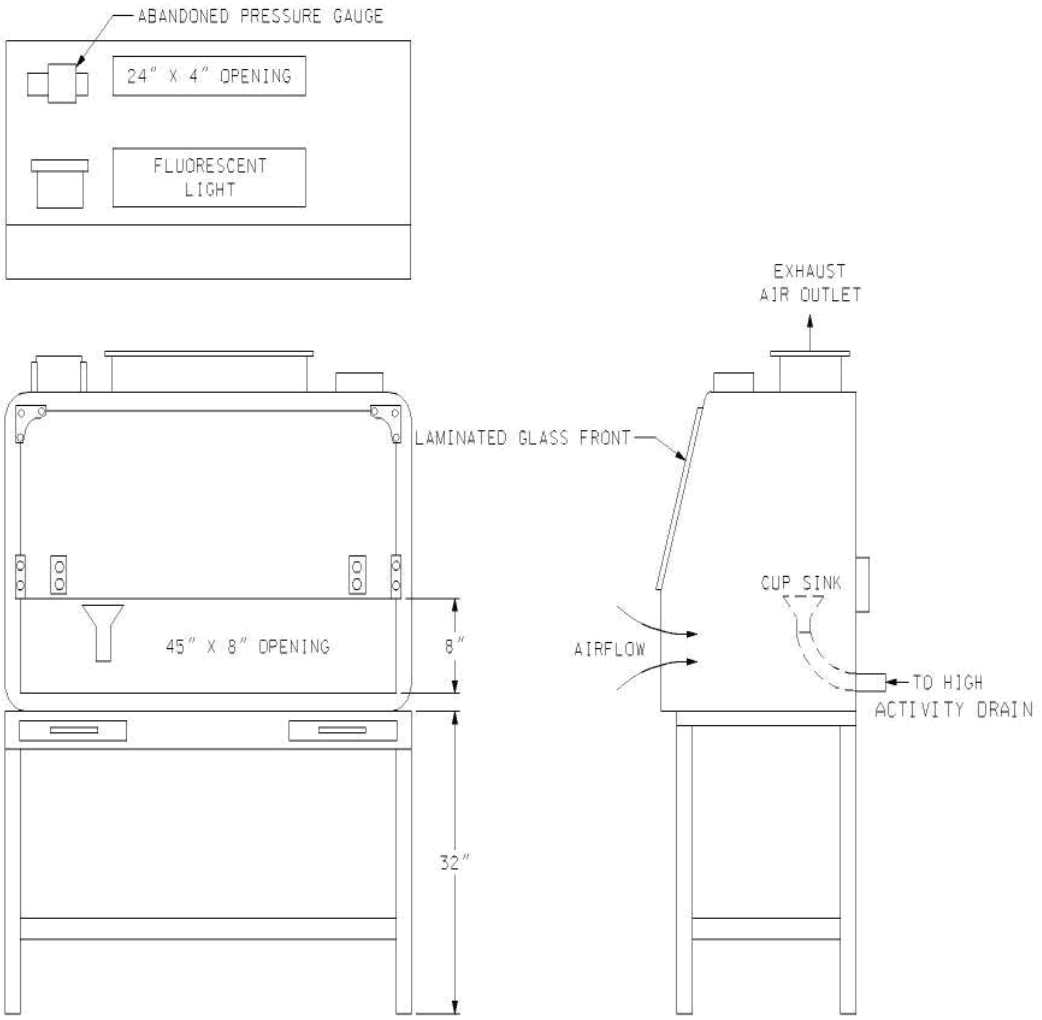

NOTE: IN BUILDING 772-F, RADIOBENCHES ARE EXHAUSTED FROM THE BOTTOM

Figure 2.6-5 Typical Radiobench

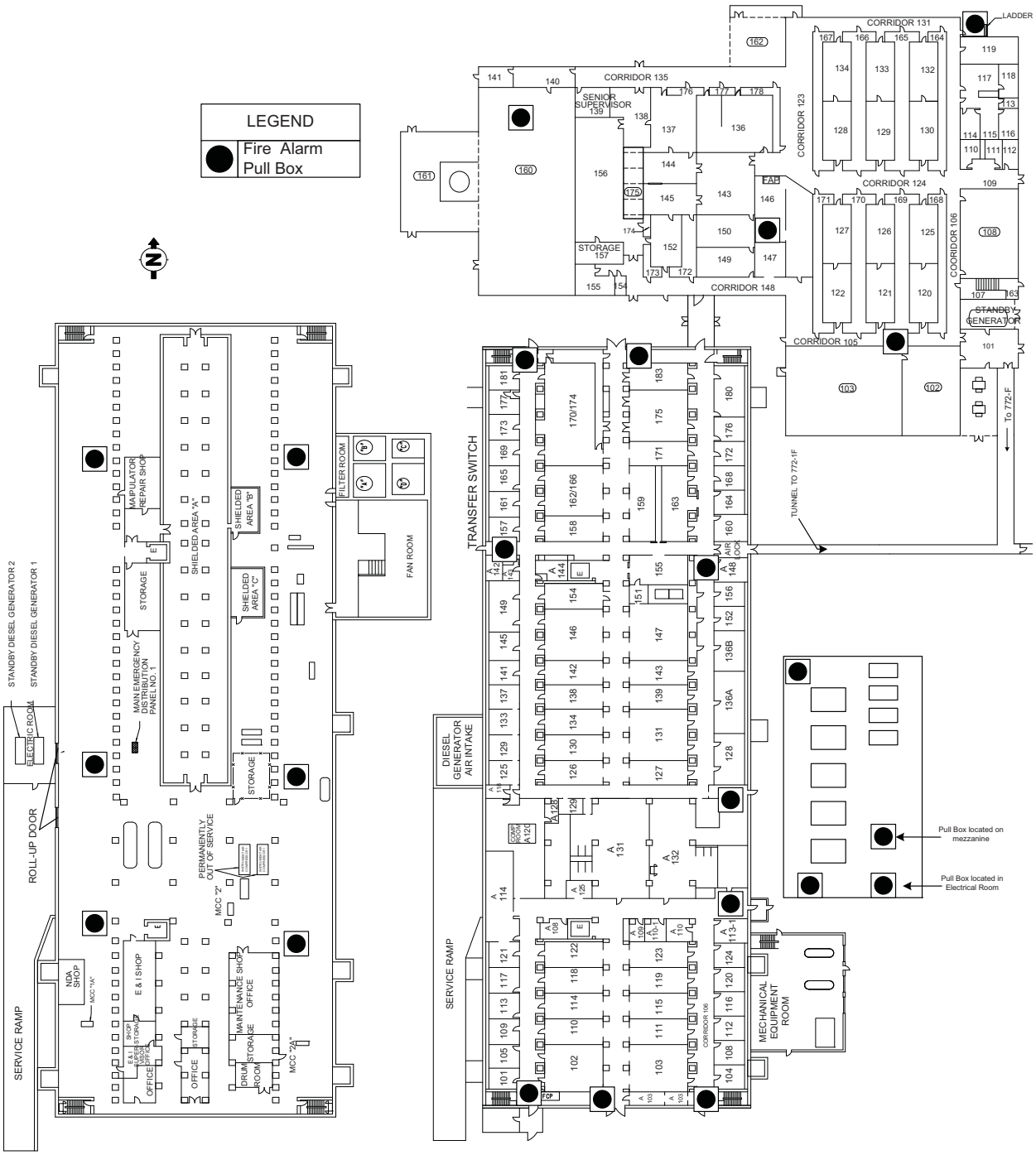

Figure 2.7-1 Fire Alarm Pull Boxes for Buildings 772-F, 772-1F, and 772-4F

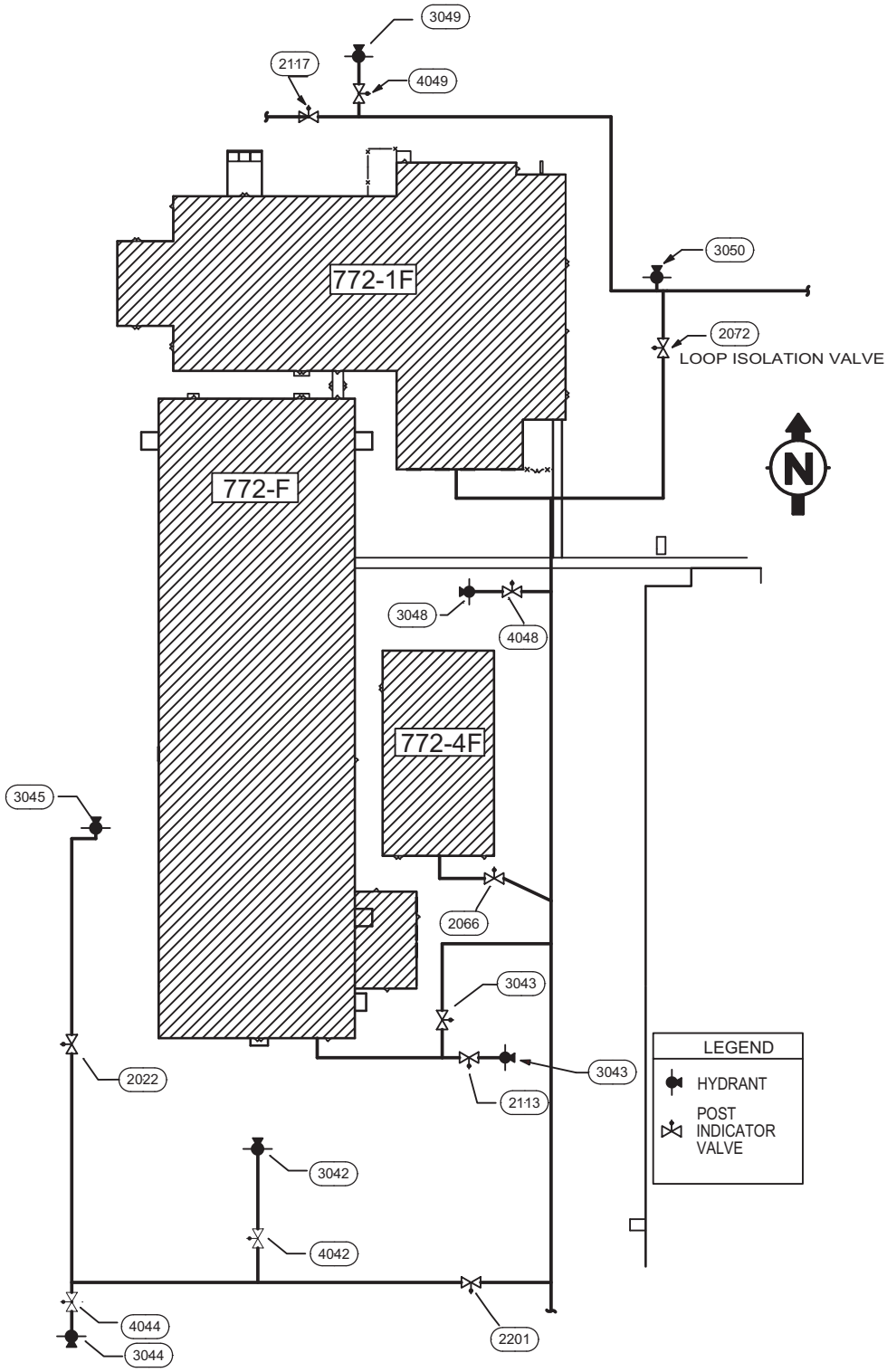

Figure 2.7-2 Fire Protection Header System for Buildings 772-F, 772-1F, and 772-4F

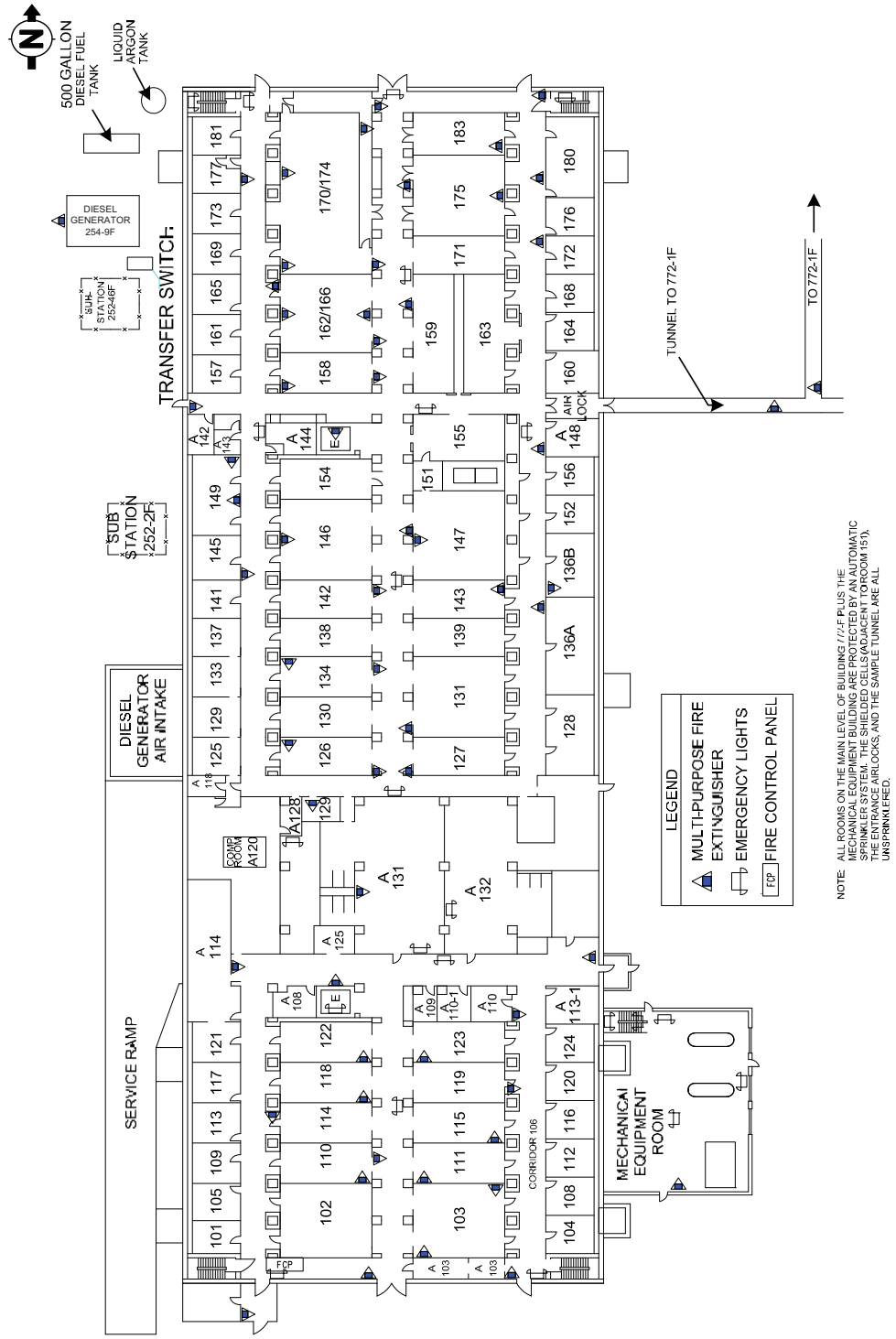

Figure 2.7-3 Building 772-F Fire Protection Systems (Main Floor)

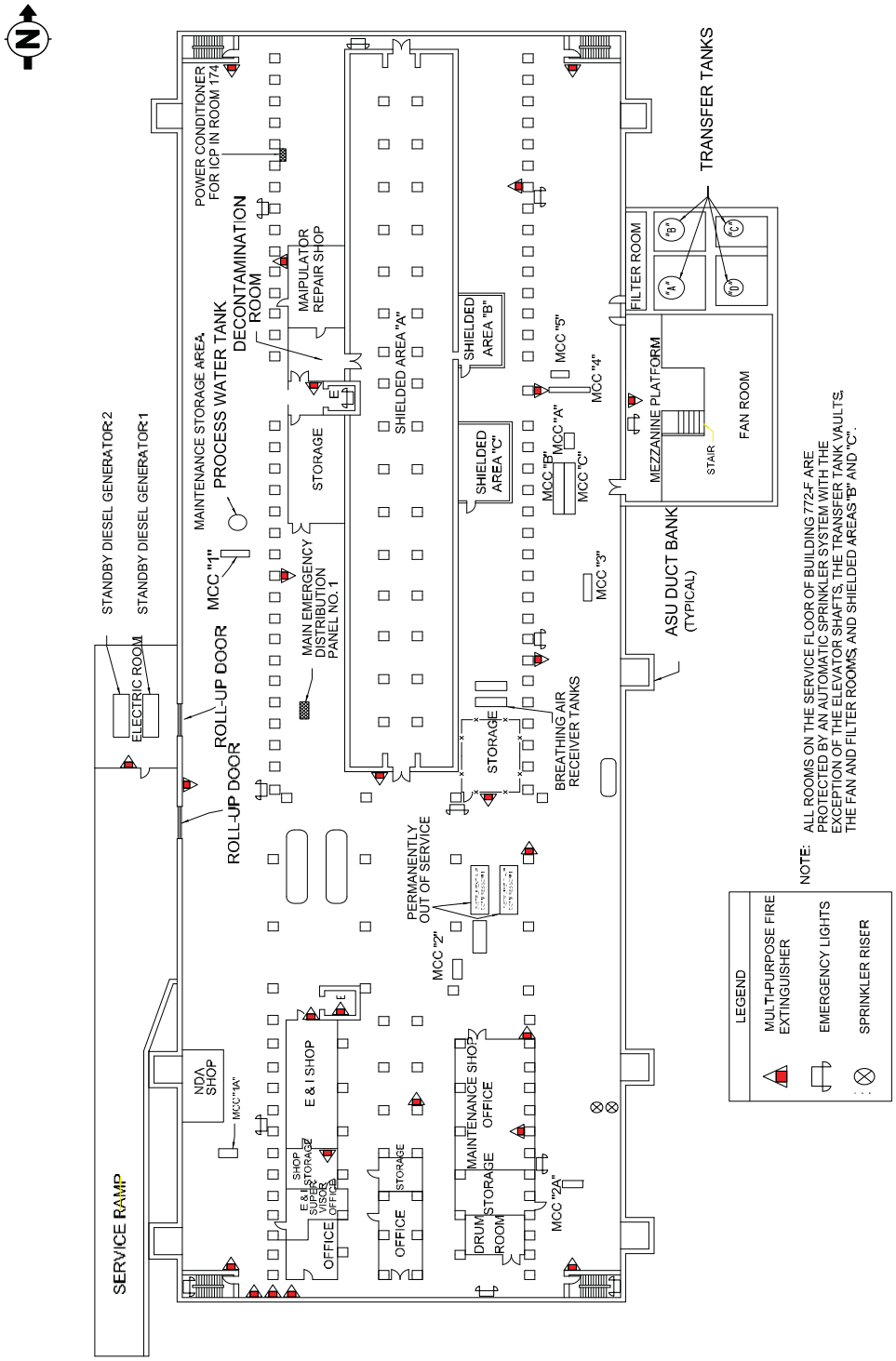

Figure 2.7-4 Building 772-F Fire Protection Systems (Service Floor)

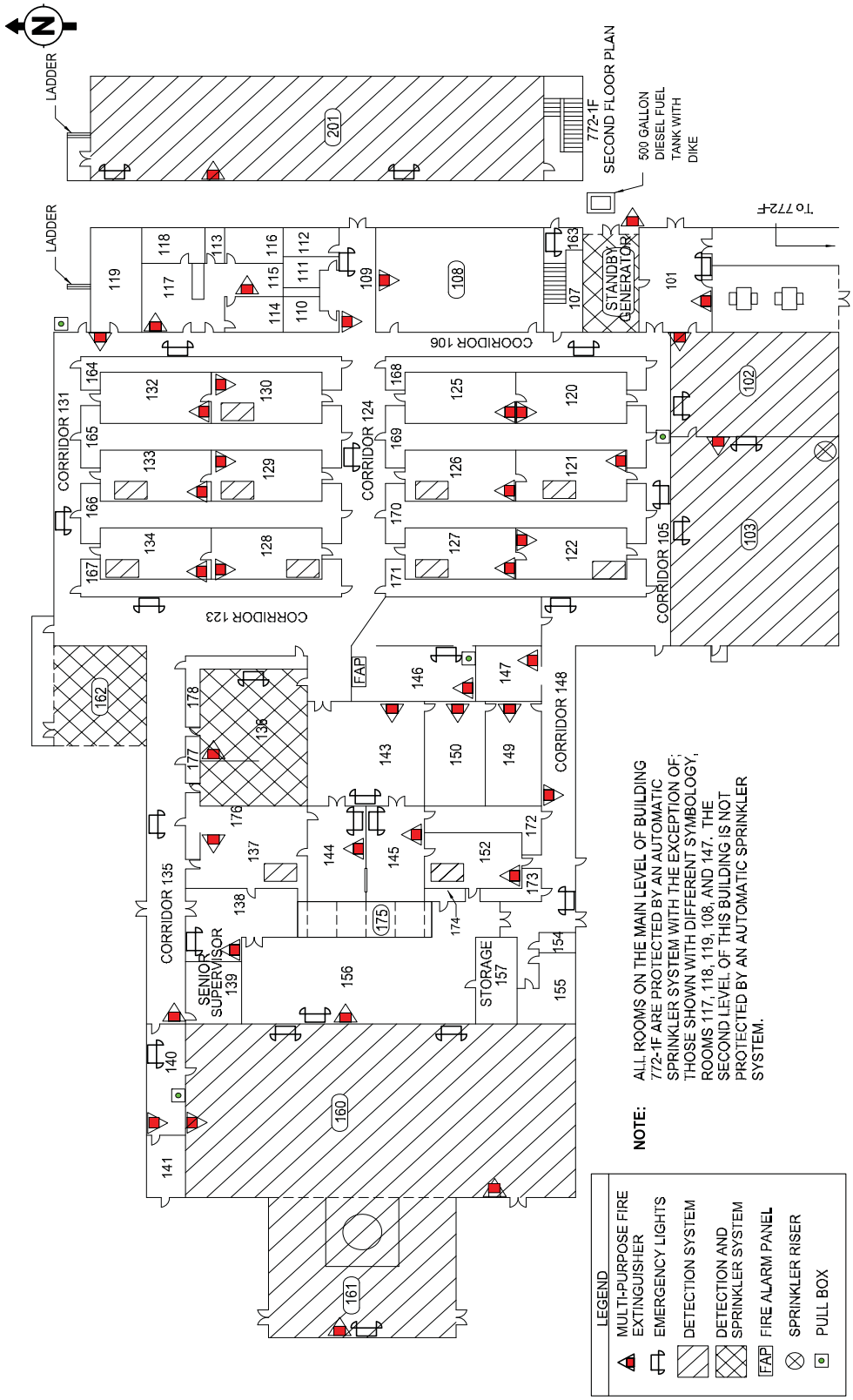

Figure 2.7-5 Building 772-1F Fire Protection Systems

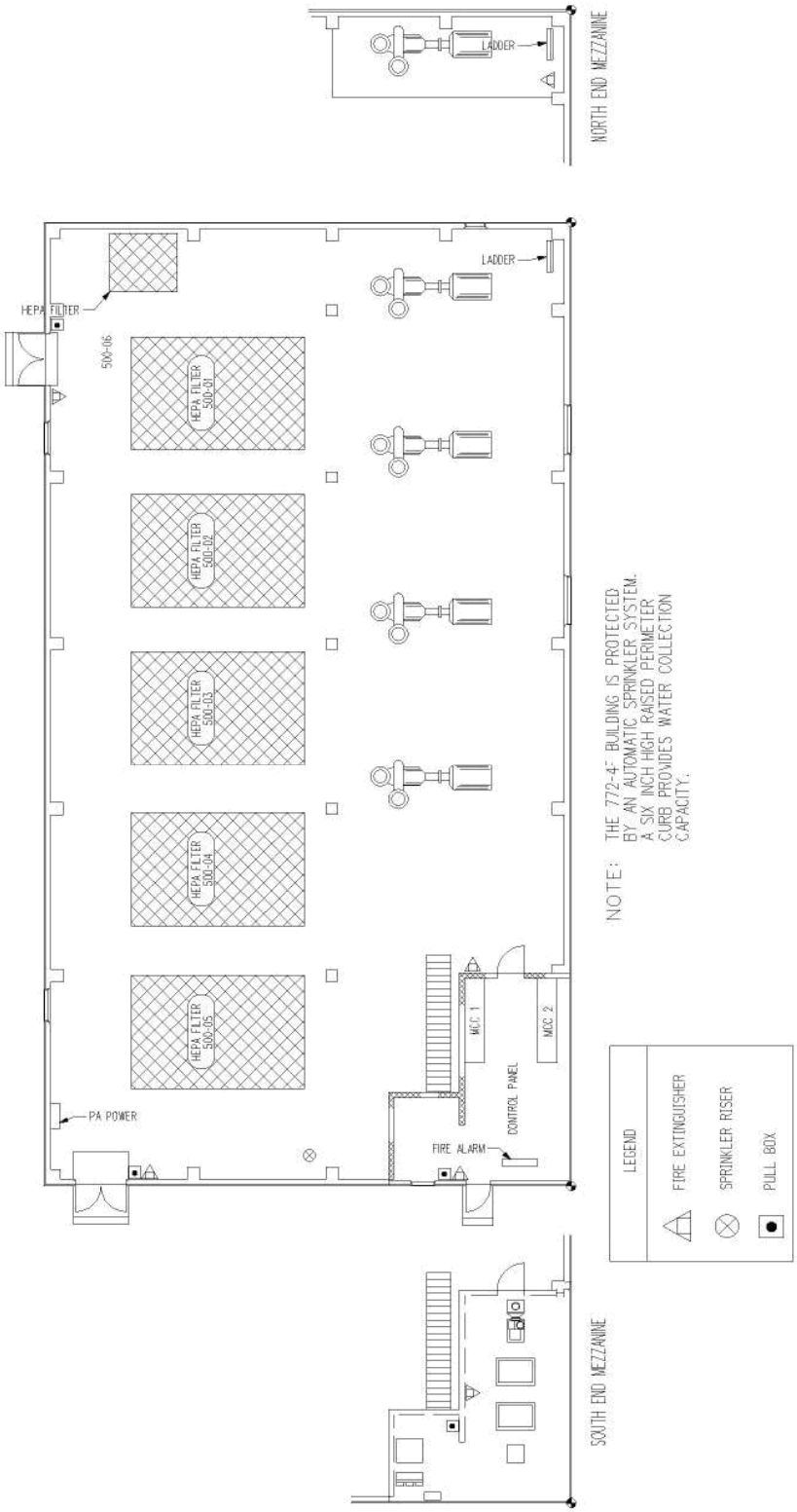

Figure 2.7-6 Building 772-4F Fire Protection Systems

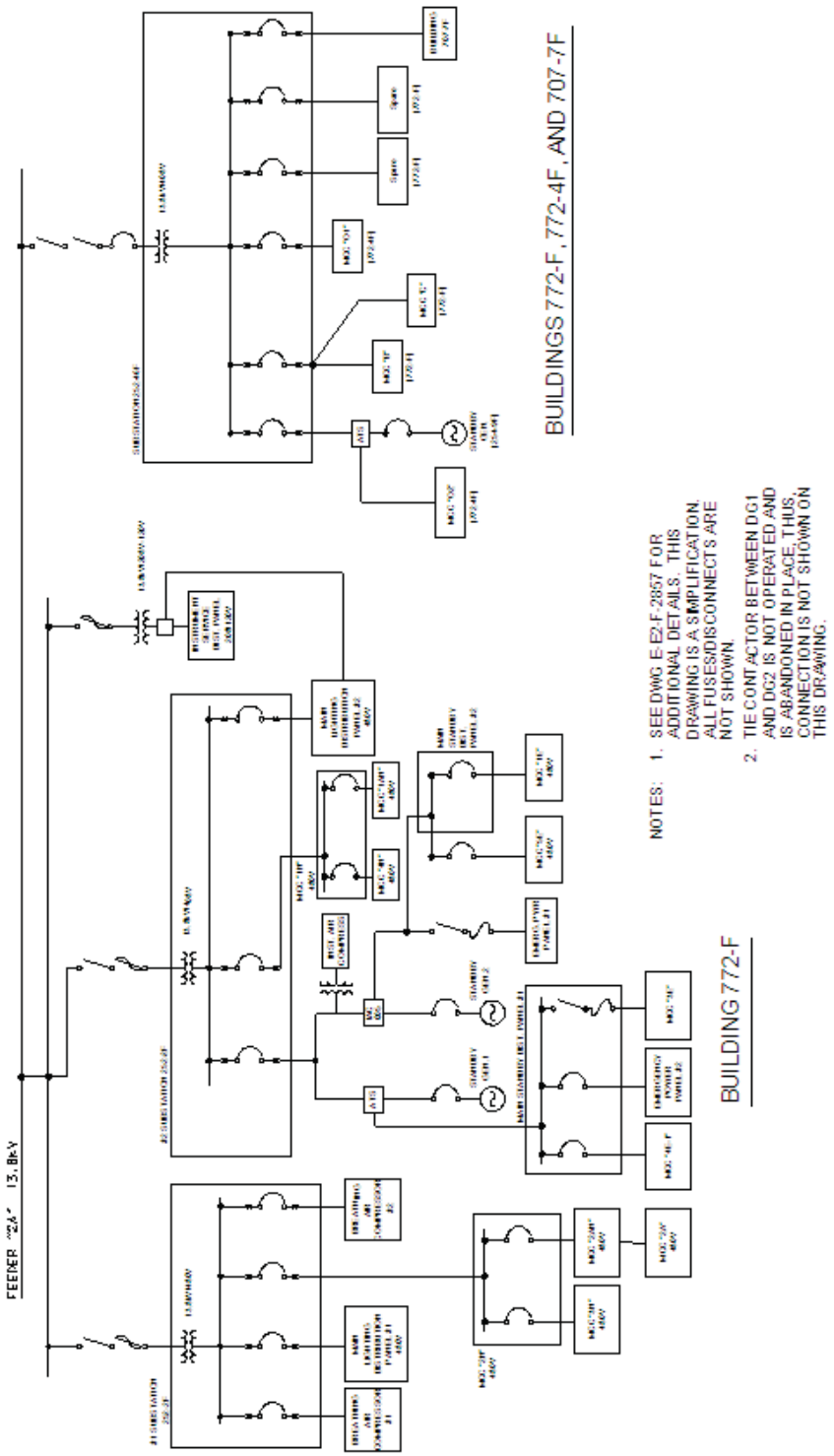

Figure 2.8-1 Single-Line Diagram of Buildings 772-F/772-4F Normal and Standby Electrical Power

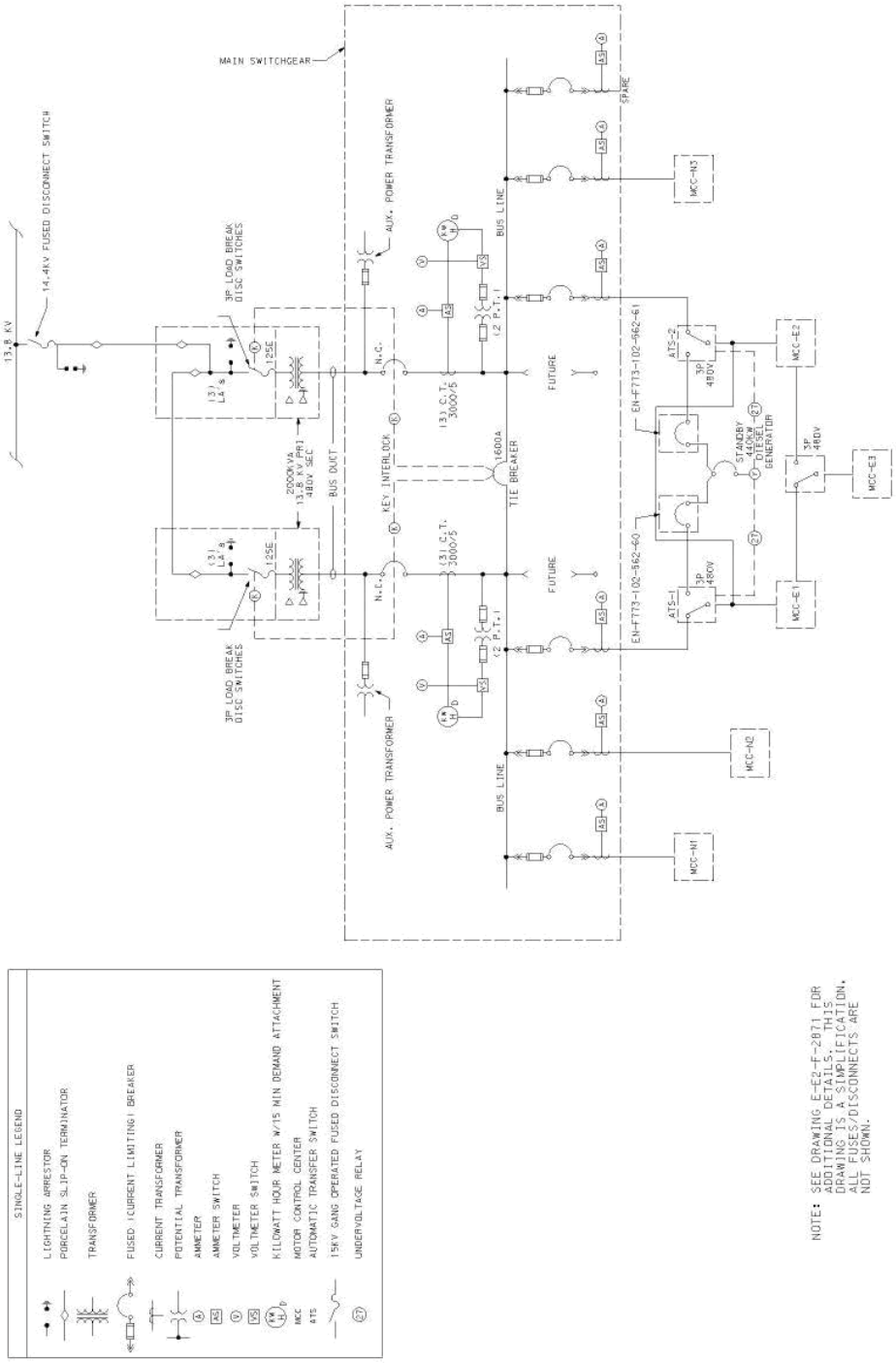

Figure 2.8-2 Single-Line Diagram of Building 772-1F Normal and Standby Electrical Power Supply

**CENTRAL LABORATORY FACILITY -
BUILDINGS 772-F, 772-1F, AND 772-4F
SAFETY ANALYSIS REPORT**

CHAPTER 3

HAZARD AND ACCIDENT ANALYSIS

August 2010

Savannah River
Nuclear Solutions, LLC
A Fluor Daniel Partnership

DISCLAIMER

This document was prepared by Savannah River Nuclear Solutions LLC (SRNS), under contract with the United States Department of Energy (DOE).

Release to and Use by Third Parties. As it pertains to releases of this document to third parties, and the use of or reference to this document by such third parties in whole or in part, neither SRNS, DOE, nor their respective officers, directors, employees, agents, consultants or personal services contractors (i) make any warranty, expressed or implied, (ii) assume any legal liability or responsibility for the accuracy, completeness, or usefulness, of any information, apparatus, product or process disclosed herein or (iii) represent that use of the same will not infringe privately owned rights. Reference herein to any specific commercial product, process, or service by trademark, name, manufacture or otherwise, does not necessarily constitute or imply endorsement, recommendation, or favoring of the same by SRNS, DOE or their respective officers, directors, employees, agents, consultants or personal services contractors. The views and opinions of the authors expressed herein do not necessarily state or reflect those of the United States Government or any agency thereof.

CONTENTS

Page

3.0 HAZARD AND ACCIDENT ANALYSIS 3.1-1

3.1 INTRODUCTION 3.1-1

3.2 REQUIREMENTS 3.2-1

3.3 HAZARD ANALYSIS 3.3-1

3.3.1 Methodology 3.3-1

3.3.1.1 Hazard Identification 3.3-2

3.3.1.2 Hazard Evaluation 3.3-3

3.3.2 Hazard Analysis Results 3.3-8

3.3.2.1 Hazard Identification 3.3-8

3.3.2.2 Hazard Classification 3.3-9

3.3.2.3 Hazard Evaluation 3.3-11

3.4 ACCIDENT ANALYSIS 3.4-1

3.4.1 Methodology 3.4-1

3.4.1.1 Computer Codes Used for Calculating Consequence 3.4-1

3.4.1.2 Scenario Development 3.4-5

3.4.1.3 Source Term Analysis 3.4-6

3.4.1.4 Consequence Analysis 3.4-10

3.4.1.5 Comparison to Guidelines 3.4-10

3.4.1.6 Summary of Safety Class Structures, Systems, and Components and Technical Safety Requirement Controls 3.4-10

3.4.2 Design Basis Accidents 3.4-10

CONTENTS (continued)

Page

3.4.2.1 Explosion, Over-pressurization Accident 3.4-11

3.4.2.2 Fire Accident 3.4-13

3.4.2.3 Uncontrolled Reaction Accident 3.4-23

3.4.2.4 Other Minor Operational-Related Accidents 3.4-28

3.4.2.5 Earthquake 3.4-33

3.4.2.6 Straight Winds and Tornadoes 3.4-37

3.4.3 Beyond Design Basis Accidents 3.4-38

3.4.3.1 Operational-Related Beyond Design Basis Accidents 3.4-39

3.4.3.2 Nuclear Criticality, Beyond Design Basis Accident 3.4-40

3.4.3.3 Earthquake, Beyond Design Basis Accident 3.4-42

3.4.3.4 Straight Winds and Tornadoes, Beyond Design Basis Accident 3.4-44

3.4.4 Chemical Releases 3.4-46

3.5 REFERENCES 3.5-1

3.6 TABLES 3.6-1

CONTENTS (continued)

Page

APPENDIX 3A HAZARD IDENTIFICATION TABLES 3A-1

APPENDIX 3B SUMMARY OF CONTROLS CREDITED IN HAZARD EVALUATION TABLES 3B-1

APPENDIX 3C SUMMARY OF SAFETY SIGNIFICANT SSCs AND ACs 3C-1

APPENDIX 3D BUILDING 772-F OPERATIONAL-RELATED DESIGN BASIS ACCIDENTS 3D-1

APPENDIX 3E BUILDING 772-1F OPERATIONAL-RELATED DESIGN BASIS ACCIDENTS 3E-1

APPENDIX 3F BUILDING 772-4F OPERATIONAL-RELATED DESIGN BASIS ACCIDENTS 3F-1

APPENDIX 3G F/H LAB FACILITY DESIGN BASIS EARTHQUAKE ACCIDENTS 3G-1

APPENDIX 3H F/H LAB FACILITY BEYOND DESIGN BASIS ACCIDENTS (INCLUDING OPERATIONAL-RELATED AND NATURAL PHENOMENA BEYOND DESIGN BASIS ACCIDENTS) 3H-1

TABLES

Page

Table 3.3-1 Frequency Qualitative Rating Levels 3.6-1

Table 3.3-2A Consequence Evaluation Levels for Hazard Receptors 3.6-2

Table 3.3-2B Risk Binning Matrix for the Offsite Public Receptor 3.6-3

Table 3.3-3 Building 772-F Radiological and Fissile Inventory Limits 3.6-4

Table 3.3-4 Building 772-1F Radiological and Fissile Inventory Limits 3.6-5

Table 3.3-5 B-25 Waste Container Staging Areas: Maximum Allowable Inventory of Radionuclides 3.6-6

Table 3.3-6 Building 772-4F Estimated Radiological Inventory 3.6-7

Table 3.3-7 Building 772-F and 772-1F Hazardous Chemical Inventory 3.6-8

Table 3.4-1 Operational-Related and Natural Phenomena Event Frequencies for the F/H Lab 3.6-16

Table 3.4-2 A Consequence Summary information for Design Basis Accidents 3.6-18

Table 3.4-2 B Consequence Summary Information for Design Basis Accidents 3.6-19

Table 3.4-3 Beyond Design Basis Accident Consequence Summary 3.6-21

Table 3.4-4 Evaluation Guideline Comparisons for Operational-Related Design Basis Accidents 3.6-23

Table 3.4-5 Evaluation Guideline Comparison for Natural Phenomena Design Basis Accidents 3.6-24

Table 3.4-6 Hazard Category 3 Thresholds for Important Isotopes at the F/H Lab 3.6-25

Table 3.4-7 Inventory for a Facility Fire in Building 772-F 3.6-26

Table 3.4-8 DELETE 3.6-27

Table 3.4-9 Inventory for a Facility Fire in Building 772-1F 3.6-28

Table 3.4-10 Estimated Inventory for a Full Facility Fire in Building 772-4F 3.6-29

TABLES (continued)

Page

Table 3.4-10A Sample Tunnel Spill – Bounding /Best Estimate 3.6-30

Table 3.4-11 Inventory for a B-25 Waste Container Staging Areas Impact Fire 3.6-31

Table 3.4-12 Evaluation Guideline Comparisons for Operational-Related Beyond Design Basis Accidents 3.6-32

Table 3.4-13 Evaluation Guideline Comparison for Natural Phenomena Beyond Design Basis Accidents 3.6-34

ACRONYMS AND ABBREVIATIONS

AC	Administrative Control
ANSI	American National Standards Institute
ANS	American Nuclear Society
ARF	Airborne Release Fraction
BEU	Beyond Extremely Unlikely
χ/Q	Relative air concentration
CFR	Code of Federal Regulations
CHA	Consolidated Hazard Analysis
CHAP	Consolidated Hazards Analysis Process
Ci	curie
Cs	Cesium
CW	Co-located Worker
DBA	Design Basis Accident
DBE	Design Basis Earthquake
DCF	Dose Conversion Factor
DID	Defense-in-Depth
DOE	Department of Energy
DSA	Documented Safety Analysis
EG	Evaluation Guideline
ERPG	Emergency Response Planning Guideline
F2	Tornado – 113 to 157 mph fastest-mile wind speed
F/H Lab	F/H Area Laboratory
FRA	Fire Risk Analysis
FW	Facility Worker
g	acceleration due to gravity
H	Hydrogen
HE	Hazard Evaluation
HEPA	High-Efficiency Particulate Air
ICRP	International Commission on Radiological Protection
LFL	Lower Flammability Limit
LOC	Level of Control
MACCS	MELCOR Accident Consequence Code System
MAR	Material At Risk
MOI	Maximally Exposed Offsite Individual
mph	miles per hour
OEP	Onsite Evaluation Point

ACRONYMS AND ABBREVIATIONS (Continued)

OSHA	Occupational Safety and Health Administration
PGA	Peak Ground Acceleration
PHA	Preliminary Hazards Analysis
Pu	Plutonium
rem	roentgen equivalent, man
RF	Respirable Fraction
RQ	Reportable Quantity
SAR	Safety Analysis Report
SEPR	Separation Facilities Fault Tree Data Bank
Sr	Strontium
SRNS	Savannah River Nuclear Solutions
SRS	Savannah River Site
SSC	Structure, System, and Component
STD	Standard
TPQ	Threshold Planning Quantity
TQ	Threshold Quantity
TRU	Transuranic
TSR	Technical Safety Requirement
USQ	Unreviewed Safety Question
VOC	Volatile Organic Compound
WSMS	Washington Safety Management Solutions
WSRC	Washington Savannah River Company

3.0 HAZARD AND ACCIDENT ANALYSIS

3.1 INTRODUCTION

This chapter of the Documented Safety Analysis (DSA) for the F/H Area Laboratory (F/H Lab) (Buildings 772-F, 772-1F, and 772-4F and the B-25 waste container staging areas) systematically identifies hazards in the facility; describes and analyzes the adequacy of the measures taken to eliminate, control, or mitigate the hazards identified; and analyzes and evaluates potential accidents and their associated risks. The accident analysis includes the following:

- Analysis of Design Basis Accidents (DBAs)
- Assessment of consequences
- Consideration of natural and manmade external events
- Assessment of contributory and causal events, mechanisms, and phenomena
- Analysis of Beyond DBAs

This chapter covers hazard identification, hazard classification, hazard evaluation, and accident analysis. Items discussed include the following:

- Methodology for hazard and accident analysis
- Identification of hazardous energy sources and hazardous material sources present
- Facility hazard classification
- Identification of potential accidents
- Accident analysis of DBAs
- Accident analysis of Beyond DBAs

As part of the safety analysis procedure set forth in 10 Code of Federal Regulations (CFR) Part 830, a hazard evaluation must be performed for the F/H Lab to characterize the level of intrinsic potential hazards associated with the facility (Ref. 1). The hazard evaluation provides a basis for hazard classification, which in turn determines the level of safety documentation required for the facility and the level of review and approval required for the safety documentation.

10 CFR Part 830 prescribes the use of a graded approach for the effort expended in safety analysis and the level of detail presented in associated documentation. The graded approach adjusts the magnitude of the preparation effort to the characteristics of the F/H Lab based on the facility hazard magnitude or severity, the facility complexity, and the facility life-cycle stage. Thus, 10 CFR Part 830 provides for developing the F/H Lab safety analysis based on these three factors.

To apply the graded approach, the analysis only needs to provide sufficient calculations to demonstrate that the evaluation guidelines (EGs) are not challenged. Once that is shown, additional quantitative analysis is not required. The graded approach requires a more rigorous

and more thoroughly documented assessment of complex, higher-hazard facilities rather than simple, lower-hazard facilities since grading is a function of both hazard potential and complexity.

3.2 REQUIREMENTS

This chapter was prepared in accordance with the format and content requirements in 10 CFR Part 830 and DOE Standard (STD) 3009-94 (Ref. 1, 2). The hazard identification and hazard evaluation were performed in accordance with the guidance provided in DOE-STD-3009-94 and Manual 11Q (Ref. 2 3). The hazard classification was based on radiological and chemical evaluations performed in accordance with the guidance provided in 10 CFR Part 830, DOE-STD-1027-92, and WSRC-MS-92-206 (Ref. 1, 4, 5).

The quantitative accident analysis was performed in accordance with the guidance provided in DOE-STD-3009-94 (Ref. 2). The design basis criteria for natural phenomena were based on DOE Order 420.1B, DOE Guide 420.1-2, DOE-STD-1020-2002, and DOE-STD-1021-92 (Ref. 6, 7, 8, 9). The nuclear criticality evaluation was based on information obtained from American National Standards Institute/American Nuclear Society (ANSI/ANS)-8.1 and Regulatory Guide 3.35 (Ref. 10, 11).

3.3 HAZARD ANALYSIS

Hazard analysis consists of three basic analytical activities: hazard identification, hazard classification, and hazard evaluation. Hazard identification provides the basis for the final hazard classification of the facility. That classification is input for the graded approach for hazard evaluation. A formal quantitative accident analysis is not required for Hazard Category 3 facilities.

This section describes the hazard identification and hazard evaluation performed for the F/H Lab. The purpose of this information is to present a comprehensive evaluation of potential process-related, natural phenomena, and external hazards that can affect the public, workers, and the environment. This analysis considers the potential for both equipment failure and human error.

Hazard identification and hazard evaluation provide a thorough, predominantly qualitative evaluation of the spectrum of risks to the public, workers, and the environment due to accidents involving the hazards identified. The hazard evaluation identifies prevention and mitigation features, including identification of expected operator response to incidents (e.g., accident mitigation actions or evacuation) and provisions for worker protection in the accident environment.

DOE-STD-3009-94 requires the hazard evaluation to comprehensively identify potential events, event initiators, and the dominant scenarios; estimate their frequencies and consequences; identify preventive and mitigative features; and present the results in a risk matrix (Ref. 2). The hazard evaluation methodology performs gross estimates of consequences and frequencies and focuses attention on those scenarios that are of greatest concern (i.e., highest risk). The hazard evaluation methodology represents the initial phase of accident analysis.

The hazards associated with the F/H Lab are both radiological and chemical in nature. To comply with DOE guidance, the hazard classification is based upon comparing facility inventories to criteria quantities of radionuclides and hazardous airborne chemical concentrations at various distances as set forth in 10 CFR Part 830 , and DOE-STD-1027-92 (Ref. 1, 4).

The inventory of radionuclides in Buildings 772-F and 772-1F consists of analytical samples containing various alpha-, beta-, gamma-, and neutron-emitting radioisotopes. The inventory also includes radioactive recoverable liquids and radionuclide standards. Radioactive particulates in the confinement exhaust system are captured on the High-Efficiency Particulate Air (HEPA) filters in the F/H Lab. Because the F/H Lab contains radioactive and fissile materials in such quantities that a nuclear hazard potentially exists, the facility is classified as a Nonreactor Nuclear Facility in accordance with 10 CFR Part 830.

3.3.1 METHODOLOGY

This section presents the methodology used to identify and characterize hazards and to perform a systematic evaluation of basic accidents.

3.3.1.1 Hazard Identification

Hazards are primarily identified by listing hazardous energy sources and hazardous material sources and by identifying hazardous locations. Comprehensive lists are developed by the hazard evaluation to identify the facility hazardous energy sources and hazardous material sources. Hazardous energy sources and hazardous material sources are added to and deleted from these lists based on their applicability to the facility. Information for identifying hazards and determining their applicability to the facility is obtained, as applicable, from the following sources:

- Existing project, safety, and environmental documents
- Design drawings and reviews
- Previous safety documentation
- Facility walkdowns and equipment data
- Consultations with facility system or process experts
- Historical operational records and data

Following the identification of hazardous energy sources and hazardous material sources, hazardous locations are systematically identified. The first step is to develop a complete list of facility locations. This list divides the facility into sections (e.g., clean areas, radiological buffer areas, radiation areas, and contamination areas). These sections are then further subdivided into subsections based on criteria (e.g., physical separation, common utilization, and location of distinctive hazards). The second step is to develop tables that provide a method for matching hazardous energy sources and hazardous material sources with facility locations. The third step is to complete the tables and thereby identify which hazardous energy sources and hazardous material sources are located within each area of the facility. The information used to develop these tables is obtained through facility walkdowns and consultation with facility personnel. This process provides general information for the identification and location of hazardous energy sources and hazardous material sources.

This hazard identification process provides the information required to perform both radiological and chemical hazard evaluations. In addition, this process identifies industrial hazards and routinely accepted hazards. However, hazard evaluations of industrial hazards and routinely accepted hazards are not included in this safety analysis. Standard industrial hazards and routinely accepted hazards are identified only to the degree that they are initiators and contributors to events resulting in radiological and chemical hazards. The following characteristics are used to determine which hazards are standard industrial hazards and/or routinely accepted hazards not included in this safety analysis:

- The hazard is routinely encountered first-hand by the general public in the home, workshop, or public areas.
- National or site standards exist to control the hazard (e.g., Occupational Safety and Health Administration [OSHA] requirements).

- No evidence exists that there are public or employee concerns about the hazard beyond normal prudence.

Protection against standard industrial hazards and routinely accepted hazards is provided by basic safety in the workplace. These hazards are formally and systematically treated by programmatic elements as follows:

- Manual 8Q defines basic site-wide safety policies and minimum requirements (Ref. 12). This procedure manual is augmented by detailed rules and procedures developed by departments and facilities for activities within their areas of responsibility, and requires compliance with DOE Orders and OSHA regulations at a minimum for industrial safety.
- Industrial safety involves the detection, mitigation, management, and prevention of workplace hazards to protect against accidental death, injury, property damage, or interruption of production as needed. Primary implementation is by site-level procedures. The operating philosophy at the Savannah River Site (SRS) is that the safety and health of employees are the first and utmost priorities. Policies are implemented at the facility level through facility-level procedures.
- During the design phase of SRS facilities or modifications to existing facilities, various design reviews contribute to industrial hazard identification. Application of the Management Oversight Risk Tree process (or other risk assessment methodology) and information from past operating reports also contribute to the hazard identification process.
- During facility operation, several programs ensure the timely identification of industrial hazards. These programs include the following:
  - OSHA compliance reviews
  - Periodic safety inspections
  - Incident investigations (formal reviews and assessments of any unsafe situation or incident)
  - Periodic safety program review
  - Routine formal and informal safety meetings and pre-job briefings
  - SRS quality assurance program

3.3.1.2 Hazard Evaluation

The hazard evaluation constitutes the primary focal point of the hazard analysis. The hazard identification and hazard classification do not provide enough information to estimate risk or to determine controls because detailed design or process information is not evaluated. The hazard evaluation provides sufficient information to allow development of specific events and scenarios associated with a hazardous release and the estimation of their frequency and consequences. The hazard evaluation is performed in accordance with the Consolidated Hazards Analysis Process (CHAP) Program & Methods, which meets the requirements of DOE-STD-3009-94,

Manual 11Q, and the Safety Documentation Integrated Work Process Guidelines and Methods (Ref 13, 2, 3, 14). The CHAP Programs and Methods requires all hazardous events, with the exception of sabotage and hazards routinely accepted by the public, to be identified in the Hazard Analysis (unmitigated). These events are the bases for subsequent analyses such as, mitigated Hazard Analyses, Accident Analyses, Emergency Preparedness Hazard Analyses, and Fire Hazard Analyses. The initial hazard analysis was updated in a Consolidated Hazard Analysis (CHA) that is documented in WSRC-TR-2006-00099 (Ref. 15). To the maximum extent possible, the results of Revision 3 of the F/H Lab Safety Analysis Report (SAR) and the Preliminary Hazards Analysis (PHA) (Ref. 16) were applied, as appropriate. A review of the Fire Risk Analysis (FRA) (Ref. 17) was completed in parallel for those events initiated by fires. Provisions of the FRA (Ref. 17) were reviewed and incorporated into the CHA. The attributes/elements of the FRA were incorporated into the appropriate events. The CHA replaces the FRA.

The primary goal of the hazard evaluation is to select specific events to be analyzed. These events must be specific to produce meaningful estimates of risk. The hazard evaluation is presented in tabular form and includes the following information:

- Event
- Causes
- Preventive controls (design and administrative)
- Frequency level (initial and prevented)
- Mitigative controls (design and administrative)
- Consequences (unmitigated and mitigated)
- Risk ranking (unmitigated and mitigated)

EVENT

The first step in the hazard evaluation process is to identify events that could result from the facility hazards. This step is accomplished through the use of the tables developed as described in Section 3.3.1.1. Hazardous energy sources, hazardous material sources, and their locations are evaluated to develop a complete list of potential events. The events are then included in the event characterization table. The event characterization table includes an event number, event category, and postulated event description. The event number is simply a method for identifying each event. The event categories are as follows:

- Fire
- Explosion, Over-pressurization
- Loss of Containment/Confinement
- Direct Exposure (Radiological Chemical)
- Nuclear Criticality

- External Hazards
- Natural Phenomena

These events are consistent with the postulated accidents to be considered in DSAs as provided in DOE-STD-3009-94 (Ref. 2).

CAUSES

The second step in the hazard evaluation process is to determine the causes of a postulated event. These causes include postulated failures, errors, operational and limiting parameters, and environmental and operating conditions. The causes of a postulated event are clearly identified to support the frequency evaluation for the event and to assist in identifying appropriate controls where required.

PREVENTIVE CONTROLS

The third step in the hazard evaluation process is to identify the preventive controls associated with the facility that would reduce the frequency of a postulated event. Preventive controls include design features and administrative features (e.g., procedures, policies, and programs).

FREQUENCY LEVEL

The fourth step in the hazard evaluation process is to determine the frequency level for the occurrence of a postulated event resulting from the causes identified. Failure rate data, historical accident data, and other sources of information are used to determine the postulated event frequency in accordance with DOE-STD-3009-94 (Ref. 2). This process includes a review of existing safety documentation (i.e., DSAs and systems analyses). The frequency levels and their corresponding codes that are used in the event characterization table are provided in Table 3.3-1.

MITIGATIVE CONTROLS

The fifth step in the hazard evaluation process is to identify the mitigative controls associated with the facility that would reduce the consequences of a postulated event. The design features and Administrative Controls (ACs) are included as mitigative controls.

CONSEQUENCES

The sixth step in the hazard evaluation process is to determine the consequence level for the occurrence of the postulated event, as well as the estimated impact on other systems and on health and safety. The consequences of the postulated events are determined based on such parameters as the quantity of hazardous material involved in the accident, the release mechanism associated with the accident, and the release pathway taken by the hazardous material. The postulated events cover the spectrum for a given hazard from small consequence events to

reasonable, worst-case conditions. Thus, conservative assumptions are incorporated into the evaluation while incredible, worst-case assumptions are not included.

The consequence levels that are used in the event characterization table are provided in DOE-STD-3009-94 (Ref. 2). Consequences are evaluated at various receptor locations to assess health effects of the postulated release. Table 3.3-2A defines the terms used to describe the radiological and chemical consequence levels used in the hazard evaluation tables for the specified receptor locations. Receptors are the Facility Worker (FW), Co-located Worker (CW), and Offsite Public.

- FW are workers immediately adjacent to, or in, the occupied area of the hazard. "Occupied area of the hazard" refers to the area within the last possible means of physically controlling the hazard or controlling access to the hazard (i.e., building, fence, permanent chain with multiple warning signs, etc.). FW equate to the Functional Classification Receptors 1 and 2 as described in Manual E7, Procedure 2.25 (Ref. 18).
- CW workers are outside the occupied area of the hazard. If there is no defined physical means of controlling the hazard or controlling access to the hazard, the location is assumed to be at the worst possible location, but no closer than 100 meters to the hazard. CWs equate to the Functional Classification Receptor 3 as described in Manual E7, Procedure 2.25 (Ref. 18).
- Offsite Public is everyone outside the site boundary at the time of the event.

FWs, located at the scene of the accident, are assumed to be the bounding FW receptor used in the Hazard Analysis. The CW receptor is located outside of the facility (i.e., outside of the last barrier, but within the SRS site boundary). The bounding consequences for this individual are evaluated at a distance of 100 meters for the Hazard Analysis and a qualitative judgment is made as to the appropriate results.

RISK RANKING

The risk ranking is provided as a measure of the risk associated with the event. The hazard evaluation tables provide, for each of the postulated release events, a bin category representing risk at each receptor location. Using event frequency and consequence levels, the Hazard Analysis team "bins" events in a matrix to assess relative risk. The objective of risk binning is to focus attention on those events that pose the greatest risk to the Offsite Public and the onsite receptors. Higher risk events might be candidates for additional analysis and/or functional classification evaluation. As discussed earlier, compliance with the Functional Classification Methodology Manual must be maintained (Ref. 19).

Table 3 is the risk binning matrix for the three receptor locations considered in the Hazard Analysis (i.e., FW, CW, and Offsite Public). In this table, a rectangular matrix in frequency-consequence space defines the bins.

Unmitigated events falling in Region "A1, A2, and A3" due to radiological release require controls (Safety Class for the public and Safety Significant for the workers) and are considered for an additional Level of Control (LOC) for the CW or public as specified in Manual E7,

Procedure 2.25 (Ref. 18). Events falling into these bins typically require further evaluation by a functional classification engineer as candidates for Safety Class functions. In DOE-STD-3009-94 terminology, these events are considered "unique," or "situations of major concern," with sufficiently high risk that individual examination is needed by accident analysis, except for the FW (Ref. 2). Unmitigated events falling in Region "A3" due to chemical release or prompt fatality require Safety Significant controls and considerations for additional LOCs as specified in Manual E7, Procedure 2.25 (Ref. 18). The desired result in the mitigated consequence is from "high" to "low" or "negligible."

Unmitigated events falling in Region "B" that challenge Region "A" levels require Safety Class (public) or Safety Significant (worker) controls. Events falling into these bins typically require further evaluation by a functional classification engineer as candidates for Safety Class, Safety Significant, or Defense-In-Depth (DID) controls to ensure the EGs are not challenged. Otherwise, events falling in Region "B" require Facility Controls. The desired result is that the mitigated combination of consequence and frequency moves toward, and possibly into, the "C" region.

Unmitigated events falling in Region "C" are not considered for controls. However, there may be events in this region that require the addition of Facility Controls because the frequency is higher than desired, or the occurrence of the uncontrolled event is unacceptable to management in any event, or the uncontrolled event is unacceptable for programmatic or political reasons.

RESULTS

The purpose of the Hazard Evaluation (HE) is to identify those events that require further analysis. The events are identified based on their associated risk ranks as discussed previously. The dominant events (i.e., those with a Risk Rank A or challenging that Risk Rank) are identified for further analysis. The HE results for the F/H Lab are documented in the HE Tables in WSRC-TR-2006-00099 (Ref. 15) and summarized in Appendix 3B.

3.3.2 HAZARD ANALYSIS RESULTS

As discussed in Section 3.3, the hazard analysis consists of three basic analytical activities: hazard identification, hazard classification, and hazard evaluation. This section provides an in-depth discussion of the work performed to ensure completeness and compliance with the methodology presented in Section 3.3.1 and DOE-STD-3009-94 (Ref. 2).

3.3.2.1 Hazard Identification

The first step to ensure completeness of the identification of hazards is to list hazardous energy sources and hazardous material sources. As part of a systematic process to identify the hazardous energy sources and hazardous material sources applicable to the F/H Lab, the following activities were performed:

- Existing safety documentation was reviewed and evaluated to identify the hazardous energy sources and hazardous material sources associated with the F/H Lab. The following safety documentation was reviewed:
  - Systems analysis (Ref. 20)
  - SARs (Ref. 21, 22, 23)
  - Justification for Continued Operation (Ref. 24)
  - Operational Safety Requirements (Ref. 25, 26)
  - Analysis and Justification Report (Ref. 27)
  - Hazards Assessment Documents (Ref. 28, 29, 30)

    Note: References 23, 24, 25, and 27 are obsolete documents now, but they were used in the original SAR preparation.
- All available Process Hazards Reviews were reviewed and evaluated (Ref. 31-35).
- F/H Lab procedures were reviewed and evaluated (Ref. 36, 37, 38).
- The Separation Facilities Fault Tree Data Bank (SEPR) database was reviewed and evaluated for the entire history of the F/H Lab (Ref. 39).
- Discussions with F/H Lab personnel were held, and information was incorporated into this evaluation.

The results of examining these sources are documented in the F/H Lab PHA (Ref. 16), which identifies the hazardous energy sources and hazardous material sources applicable to the F/H Lab, as well as the locations of these sources within the facility. The CHA reviewed the PHA and facility changes since the PHA was completed (Ref. 15). Completeness of the identification of hazardous energy sources and hazardous material sources as required by DOE-STD-3009-94 (Ref. 2) is shown in Appendix 3A. Appendix 3A, Tables 3A-1 and 3A-2 provide lists of

hazardous energy source groups and hazardous material source groups, respectively, and their relationship to the hazard categories and the event categories as defined previously. Event categories are no longer utilized but are shown here for historical purposes only. To the maximum extent possible the results of the PHA were incorporated into the F/H Lab CHA (Ref. 15). The CHA replaces the PHA.

3.3.2.2 Hazard Classification

To perform the hazard classification, quantities of specific radionuclides and hazardous chemicals are obtained from facility historical data and previous facility safety documentation. Bounding radiological inventory limits for Building 772-F, Building 772-1F, and the B-25 waste container staging areas are provided in S-CLC-F-00164, S-CLC-F-00178, and S-CLC-F-00603 are presented in Tables 3.3-3, 3.3-4, and 3.3-5, respectively (Ref. 40, 41, 91). An estimated radiological inventory contained on the HEPA filters in Building 772-4F is provided in S-CLC-F-00164 and is presented in Table 3.3-6.

Bounding hazardous chemical inventories for the combined inventories of Buildings 772-F and 772-1F are provided in Table 3.3-7. These hazardous chemical inventory limits have been established from results obtained in S-CLC-F-00322 (Ref. 43). There is no hazardous chemical inventory for Building 772-4F or the B-25 waste containers.

WSRC-TR-94-0114 and WSRC-TR-94-0115 present the Hazards Assessment Documents for Buildings 772-F, 772-1F, and 772-4F (Ref. 28, 29). These references present the complete hazard assessment and classification for these facilities. In accordance with the requirements of DOE-STD-1027-92, the F/H Lab was segmented based on the independence of hazards (Ref. 4). As a result, each building is evaluated as an independent segment. S-HAD-F-00004 presents the Hazards Assessment Document for the B-25 waste container staging areas which was revisited for an updated radionuclide inventory (Ref. 30, 91). The B-25 waste container staging areas are considered a facility segment since they are not within any of the F/H Lab buildings or connected to them by any systems. The B-25 waste containers may be temporarily staged anywhere outside of the buildings in the area of the F/H Lab. The results of the Hazards Assessment Documents are presented in the following sections. The inventory utilized in the Hazard Assessment Documents listed above bounds the inventory shown in Tables 3.3-3 thru Tables 3.3-7. Even if the actual values from these tables were utilized the Hazard Categories presented in the following sections would not change.

BUILDINGS 772-F AND 772-4F RADIOLOGICAL RESULTS

The comparison of the Building 772-F maximum radionuclide inventory to the threshold quantities (TQs) set forth in DOE-STD-1027-92 demonstrated that the inventories of Plutonium (Pu)-238, Pu-239, and Pu-240 in Building 772-F are greater than the associated Hazard Category 2 TQs and that the sum of the ratios of the quantity of each radionuclide to the Hazard Category 2 TQs exceeds one (Ref. 4). Therefore, this assessment results in Building 772-F being classified as Hazard Category 2.

The comparison of the Building 772-4F radionuclide inventory to the TQs set forth in DOE-STD-1027-92 demonstrated that the estimated inventories of isotopes in Building 772-4F are less than the associated Hazard Category 3 TQs and that the sum of the ratios of the quantity of each radionuclide to the Hazard Category 3 TQs is less than 1. Therefore, this assessment results in Building 772-4F being classified as a Radiological Facility.

BUILDING 772-1F RADIOLOGICAL RESULTS

The comparison of the Building 772-1F maximum radionuclide inventory to the TQs set forth in DOE-STD-1027-92 demonstrated that the inventories of isotopes in Building 772-1F are less than the associated Hazard Category 2 TQs and that the sum of the ratios of the quantity of each radionuclide to the Hazard Category 2 TQs is less than 1 (Ref. 4). The comparison also demonstrated that the Hazard Category 3 TQs are exceeded. Therefore, this analysis results in Building 772-1F being classified as Hazard Category 3.

B-25 WASTE CONTAINER STAGING AREAS' RADIOLOGICAL RESULTS

The comparison of the B-25 waste container staging areas' maximum radionuclide inventory to the TQs set forth in DOE-STD-1027-92 indicates that the inventories of Hydrogen (H)-3, Strontium (Sr)-90, Cesium (Cs)-137, Pu-241, and Pu-239 are less than the associated Hazard Category 2 threshold limits but greater than (or equivalent to) the associated Hazard Category 3 threshold limits (Ref. 91). These isotopes are representative of an inventory limit of 2,722 curie (Ci) for beta-gamma emitters as a group, which includes a radionuclide specific limit for Sr-90 and excludes tritium and Pu-241. The inventory limit of 47 Ci for alpha emitters represents all alpha emitters. The inventory limit has two additional limits, 1,000 Ci of tritium and 110 Ci of Pu-241. The STD-1027-92 Hazard Category 2 threshold limits are lower for some other isotopes found in the F/H Lab, such as Ruthenium (Ru)-106 for beta-gamma emitters and Thorium (Th)-232 or Curium (Cm)-245 for alpha emitters (Ref. 91). However, due to the low expected inventory of these isotopes, relative to the isotopes for the current mission, the Hazard Category is bounded by the representative isotopes H-3, Pu-239, Pu-241, Cs-137 and Sr-90. In addition, the sum of the ratios of the quantity of each representative radionuclide to the Hazard Category 2 TQs is less than 1. Therefore, this assessment results in the B-25 waste container staging areas being classified as Hazard Category 3.

CHEMICAL RESULTS FOR BUILDINGS 772-F, 772-1F, AND 772-4F AND THE B-25 WASTE CONTAINER STAGING AREAS

In the above mentioned Hazards Assessment Documents for Buildings 772-F and 772-1F, chemicals inventories were compared to the Reportable Quantities (RQs) of 40 CFR 302.4, the Threshold Planning Quantities (TPQs) of 40 CFR 355, and the TQs of 29 CFR 1910.119 (Ref. 44, 45, 46). For those chemicals that exceeded the RQs, TPQs, or TQs, a chemical hazard analysis was performed to determine the maximum offsite, onsite, and local airborne concentrations resulting from a postulated release of the chemical inventory. These maximum airborne concentrations were then compared to the Emergency Response Planning Guideline (ERPG)-3 or equivalent values, which can be found in References 5 and 47.

It was determined that the maximum local airborne chemical concentrations resulting from a postulated release were less than their associated equivalent ERPG-3 values. Lead was the only chemical with a local release concentration on the same order of magnitude as its associated equivalent ERPG-3 value. However, the majority of lead is shielding material and is not in releasable form. Therefore, any risk associated with lead is minimized. Based on these conclusions, the chemical hazard classification for Buildings 772-F and 772-1F was declared General Use. This implied that specific chemical accident scenarios did not have to be analyzed in Section 3.4.

However, additional criteria given in Procedure 2.25 of Manual E7 require that chemical hazards also be evaluated against the ERPG-2 or equivalent thresholds (Ref. 18). Therefore, potential releases of the chemical inventory of Buildings 772-F and 772-1F were evaluated and compared to the ERPG-2 or equivalent thresholds to establish chemical inventory limits. This evaluation is provided as an Accident Analysis in Section 3.4.4. The inventory limits for the combined chemical inventory of Buildings 772-F and 772-1F are provided in Table 3.3-7.

If there is a need to exceed the inventory amount for any chemical listed in Table 3.3-7 or the use of an additional chemical not listed in the table is required, then additional analysis will have to be performed or a change made in intended laboratory operations. This is to ensure that inventory changes in Buildings 772-F and 772-1F will not result in a change in the facility classification for chemical hazards.

Building 772-4F and the B-25 waste container staging areas do not have a significant chemical inventory and are not considered in the evaluation of potential chemical releases. Therefore, based on this conclusion and the conclusions of the Hazard Assessment Documents prepared in accordance with DOE-STD-1027-92, the chemical hazard classification for Building 772-4F and the B-25 waste container staging areas is General use (Ref. 4).

3.3.2.3 Hazard Evaluation

The event characterization is performed in accordance with the methodology provided in Section 3.3.1

All potential events associated with the F/H Lab were identified. The HE results for the F/H Lab and required Safety Significant controls are documented in the HE Tables in WSRC-TR-2006-00099 (Ref. 15) and summarized in Appendix 3B and 3C. Since offsite guidelines were not challenged, no Safety Class controls were required.

The hazard evaluation process identified 74 potential events for the Maximally-Exposed Offsite Individual (MOI), the CW, and the FW involving hazards and/or hazardous materials that were characterized according to the methodology discussed in Section 3.3.1. This characterization is documented in the CHA (Ref. 15). Following this characterization, the risk rank for each postulated event is determined by locating the event on the risk matrix (Table 3.3-2B) based on the consequence level and frequency level of the event. The total number of events placed in each risk rank is as follows:

Risk Rank

	MOI	CW	FW
A	0	8	15
B	1	26	30
C	73	40	29

As shown above, none of the 74 potential events result in Risk Rank A for the MOI. Eight of the potential events result in Risk Rank A for the CW, while 26 events result in Risk Rank B for the CW. The F/H Lab CHA identified 15 Rank A events and 30 Risk Rank B events for the FW. The remaining events are "negligible" in consequence to the three receptors.

Note: Changes to the number of events per Risk Rank are the results in changes to the methodology discussed above in the CHA (Ref. 15).

LR-56S LOADING STATION

The hazard analysis performed for the LR-56S Loading Station identified 24 potential events (Ref. 48). None of these events are Scenario Class I or II for the MOI or Onsite Evaluation Point (OEP). There are 4 Scenario Class II events with “moderate” unmitigated consequence for the FW in external and natural phenomena categories. Eighteen events of unmitigated consequences in all categories have either “negligible” or “low consequence” to the FW; 2 criticality events in the Nuclear Criticality category are “Beyond Extremely Unlikely” (BEU) because of Inventory Control Program.

DEFENSE-IN-DEPTH

DID as an approach to facility safety builds in layers of defense against the release of hazardous materials so that no one layer is completely relied upon. To compensate for potential human and mechanical failures, DID is based on several layers of protection with successive barriers to prevent the release of hazardous materials to the environment. This approach includes measures to protect the public, workers, and the environment from harm in case these barriers are not fully effective. Defining DID, as it exists at a given facility, is crucial for determining a safety basis.

All the Structures, Systems, and Components (SSCs) and ACs that act to protect either the public or worker from the release of a hazard are part of the facilities DID. Some of these perform Safety Significant functions and are classified accordingly. The process of identifying potential major contributors to DID is a natural extension of the hazard evaluation process. Events that have the potential for significant consequences to the public or workers are scrutinized more closely using this process. Events that are:

1. More frequent than BEU and have an unmitigated consequence to any receptor that would result in death or serious injury within one year based on an exposure for the event duration (exposures up to 2 hours), or

2. Identified in hazard or accident analysis as requiring a LOC for the CW or the public are considered for additional controls to provide Major DID.

Control Strategy Development

As stated in the CHA (Ref. 15), significant effort was expended to select a control set for each identified hazardous situation that embodied DID concepts in ensuring evaluation criteria would not be exceeded. The CHA identifies prevention and mitigation features for all 74 potential events. An examination of these events provides a summary of the elements of DID. The EGs utilized in the CHA are shown in Table 3.3-1, 3.3-2A and 3.3-2B. Controls specifically credited with reducing the frequency or consequences are designated Safety Significant. These controls are credited with reducing the A/A1-region risk to the workers or with protecting fundamental assumptions in the analysis. Note that FW risks that are binned in the A-region but are due solely to Standard Industrial Hazards are not required to incorporate Safety Significant controls (Ref. 18).

For hazardous events that do not exceed site EGs, but challenge the A region as B-region events, controls were selected by the facility to reduce risk. The controls reduce the B-region risk from radiological exposure and/or life-threatening injury to workers. These controls were also designated Safety Significant.

Safety Significant Structures, Systems, and Components

Certain design features prevent or mitigate the release of radiological material or hazardous chemicals that could result in a worker fatality or acute injury that would result in medical treatment for immediately life-threatening or permanently disabling injuries. The F/H Lab design features that are designated as Safety Significant SSCs are as follows:

- Gloveboxes located in Buildings 772-F and 772-1F
- Shielded cells located in Buildings 772-F and 772-1F
- 772-F Shielded Cell ventilation system
- Portions of the Offgas exhaust system for Buildings 772-F. (Details of Safety Significant portions are provided in Chapter 4)
- Portions of the Main exhaust systems for Buildings 772-Fand 772-4F. (Details of Safety Significant portions are provided in Chapter 4)
- Building elements for Buildings 772-F and 772-4F
- 772-1F wall(s) separating the building from the B-25 waste inventory
- Compressed Gas Flow Orifice in buildings 772-F and 772-1F

These Safety Significant SSCs provide passive confinement and do not require operability of exhaust fans, controls, or alarms. Chapter 4 of this DSA discusses these Safety Significant SSCs in detail.

Certain engineered systems prevent or mitigate the release of radiological material or hazardous chemicals that could result in a worker fatality or acute injury that would result in medical treatment for immediately life-threatening or permanently disabling injuries. The F/H Lab engineered systems that are designated as Safety Significant SSCs are as follows:

- Fire Suppression in Buildings 772-F and 772-1F

These Safety Significant SSCs require operability to perform the function credited for mitigation. Chapter 4 of this DSA discusses these Safety Significant SSCs in detail.

Safety Significant Administrative Controls

Certain ACs features prevent or mitigate the release of radiological material or hazardous chemicals that could result in a worker fatality or acute injury that would result in medical treatment for immediately life-threatening or permanently disabling injuries. The F/H Lab ACs that are designated as Safety Significant SSCs are as follows:

- Radiological Protection Program
- Area Emergency Preparedness Program
- Radiological Inventory (Facility and Volatile Organic Compound [VOC] Laboratory Module Limits)
- Nuclear Criticality Safety Program
- Fire Protection Program
- Chemical Control Program
- Propane Control Program
- Hydrogen Control limit

Chapter 5 of this DSA discusses these Safety Significant SSCs in detail. These ACs are also included in the Technical Safety Requirements (TSRs).

DEFENSE-IN-DEPTH

DID as an approach to facility safety builds in layers of defense against the release of hazardous materials so that no one layer is completely relied upon. To compensate for potential human and mechanical failures, DID is based on several layers of protection with successive barriers to prevent the release of hazardous materials to the environment. This approach includes measures to protect the public, workers, and the environment from harm in case these barriers are not fully effective. Defining DID, as it exists at a given facility, is crucial for determining a safety basis.

All the SSCs and ACs that act to protect either the public or worker from the release of a hazard are part of the facilities DID. Some of these perform Safety Class and Safety Significant functions and are classified accordingly. The process of identifying potential major contributors to DID is a natural extension of the hazard evaluation process. Events that have the potential for

significant consequences to the public or workers are scrutinized more closely using this process. Events that are:

1. More frequent than BEU and have an unmitigated consequence to any receptor that would result in death or serious injury within one year based on an exposure for the event duration (exposures up to 2 hours), or
2. Identified in hazard or accident analysis as requiring a LOC for the CW or the public are considered for additional controls to provide Major DID.

As shown in the LR-56S Loading Station PHA (Ref. 48), none of the 24 potential events identified in Table A1 result in Scenario Class I or II for the MOI or OEP. There are four events that result in Scenario Class II for the FW. These four events are identified in Table A1 as Events 15, 16, 18 and 22. Event 15 consists of a widespread fire releasing and/or dispersing radiological and/or chemical inventory initiated by an aircraft crash. Event 16 consists of damage to the LR-56S trailer in the Loading Station resulting in a breach of containment initiated by a ground vehicle impact. Events 18 and 22 are initiated by natural phenomena causing damage to the LR-56S trailer in the Loading Station resulting in a breach of containment accompanied by fire. Since none of the accident scenarios evaluated result in unmitigated consequences that exceed the Offsite EGs, a Non-Safety Class/Safety Significant DID evaluation as defined in Procedure 2.25 of Manual E7 is not required (Ref. 18). Therefore, DID features for these events are not required and are eliminated from further consideration. Table A1 in the PHA identifies prevention and mitigation features for all 24 potential events.

Major Contributors to Defense in Depth

Controls identified in the CHA (Ref. 15) as major contributors to DID were as follows:

- Glovebox Physical Confinement Barrier Testing
- HEPA Filter Testing Program

These controls are ACs and were classified as Safety Significant. The Glovebox Physical Confinement Barrier Testing ensures glovebox integrity for both Over-pressurization and Loss of Confinement Accidents. This AC performs a DID for the primary Engineered control (gloveboxes) by checking the gloveboxes and their main working components for radiological contamination. The HEPA Filter Testing Program performs a significant function as DID for both Over-pressurization and Loss of Confinement Accidents. Periodic testing confirms that the leak path for the filter and housing seal are within standard limits. In the event of a radionuclide release during an accident while the ventilation fan (non-Safety Significant) is operating, discharge from the facility is minimized by the filtration path. No credit is taken for the filtration effect in the accident analyses.

Non-Safety Class/Safety Significant Defense in Depth

As shown previously, none of the 74 potential events identified in the CHA (Ref. 15) result in Risk Rank A for the MOI. As documented in the CHA multiple levels of Safety Significant

controls have been selected to prevent and/or mitigate these events. A non-Safety Class/Safety Significant DID evaluation as defined in Procedure 2.25 of Manual E7 is not required (Ref. 18).

WORKER SAFETY AND DEFENSE-IN-DEPTH

This section summarizes the major features protecting workers from the hazards of facility operation, exclusive of standard industrial hazards. The Safety Significant SSCs and ACs Section, above, identified the primary controls for protecting the workers from radiation exposure and from radionuclide contamination that could result in an acute worker fatality or serious injuries to workers. The Safety Significant SSCs for worker safety are part of a much larger set of safety features including administrative features. This larger set of worker safety features provides general DID and includes the following, which are not Safety Significant SSCs:

- Speed control program (limit vehicle speed on the access roads to the loading station)
- Portable fire extinguishers
- National Fire Protection Association approved storage cabinets for flammable liquids
- Retaining chains and caps for gas cylinders
- Emergency battery-powered lighting
- Standby power
- Portable respiratory devices
- Breathing air system
- Public address system
- Safety showers
- Eyewash stations
- Protective clothing, including gloves
- Approved scaffolding, rigging, and associated safety equipment
- Tool and equipment guards
- Hearing protection
- Equipment grounding devices
- Ground fault interrupters
- Main Ventilation and Exhaust System including fans and dampers
- Offgas Exhaust System fans and dampers
- Continuous Air Monitors
- Pressure Protection Program – relief valves
- Shipping Containers

- Supply Air Interlock
- Propane piping
- Propane leak detection
- HAD and LAD Design (Tanks, cells, piping and exhaust components)
- Overflow drum for HAD
- HAD and LAD tank exhaust
- Shielded cell design
- Shielded cell exhaust
- Corrosion resistant drain piping
- Drip pan on HAD pump
- LR 56S Package Design
- Transfer Piping Design (Double Wall Piping)
- Transfer Piping leak detection system
- Waste Container Material Design – metal
- Grounding

The primary method for providing DID through administrative features is the development of facility procedures. These facility procedures are lower-tier documents that implement site-wide requirements and the requirements of DOE Orders. These procedures also implement safe facility operation and provide the primary means of safety control. Administrative procedures are in place at the F/H Lab to govern the following:

- Authority and responsibility for facility safe operation and shutdown
- Equipment control (e.g., lockout/tagout)
- Procedure adherence
- Conduct of operations
- Control of maintenance
- Control of modifications
- Radioactive and hazardous waste management
- Quality assurance
- Industrial safety

Operating procedures are in place to govern the following:

- Inventory control
- Startup, operation, and shutdown of the facility systems and equipment
- In-service surveillance

- Initial testing

Maintenance procedures are in place to govern the following:

- Control of routine maintenance, inspection, calibration, and test activities
- Preventive and corrective maintenance

This larger set of worker safety features includes the following, which are not Safety Significant ACs but do provide general DID:

Administrative features for worker safety include the following:

- Emergency and fire response team
- Spill control team
- Onsite medical unit
- SRS safety manual and training
- Inspections and audits
- Signs and postings
- Preventive maintenance on Engineering systems
- Practice of ALARA
- Industrial Hygiene Program
- Procedures controlling routine work within the facility
- Procedures providing direction for response to abnormal conditions

Administrative features are also assigned TSR coverage for worker safety. These features include the following:

- Radionuclide inventory control program
- Radiological protection program
- Facility fire protection program
- Propane controls
- HEPA filter testing program
- Area emergency plan
- Chemical control program
- Nuclear criticality safety program
- Organization
- Reviews and assessments
- Staff qualifications and training

- Response plans
- TSR controls
- Procedure change control
- Configuration control
- Environmental compliance program
- Quality assurance
- Unreviewed Safety Question (USQ) program
- Glovebox Containment Control

The worker safety features described in this section are an integral part of the facility design and operation. These worker safety features are adequate, especially with the major renovations to Building 772-F and its main exhaust system taken into consideration. These worker safety features have also been shown to be effective through the many years of safe operation at the F/H Lab. These programmatic safety procedures and operating procedures are further discussed in detail in Chapters 6 through 12, 14, and 15 of this DSA.

Additional Controls

Implementation of associated administrative features provides an inner layer of DID for the events involving a propane explosion. This layer of DID is both preventive and mitigative in nature and is provided through the implementation of facility procedures that establish propane cylinder handling methods and control locations for propane cylinder storage and use. These procedures result in preventing and mitigating the consequences of a propane explosion and include the following controls. The first three are TSR controls. The remainder provide DID.

- A limit of three 20-pound full propane cylinders within Building 772-F or 772-1F
- A limit of only one full 20-pound propane cylinder within any one laboratory module
- A requirement that prohibits propane gas service from being supplied to a glovebox
- A restriction on propane usage in Building 772-1F to Rooms 120 and 125
- A requirement to perform leak checks after changing out propane cylinders

An inner layer of DID is provided for the events involving a spill by the implementation of associated administrative features. This layer of DID is mitigative in nature and is provided through the implementation of facility procedures that do the following and thus result in mitigating the consequences of a spill:

- Allow opening containers of chemicals and radioactive materials only inside secondary confinement systems, when required by concentration or activity levels
- Minimize the type and quantity of chemicals and radioactive materials within secondary confinement systems
- Provide the methodology for spill control and emergency response

Two inner layers of DID are provided for the events involving chemical accidents by the implementation of associated administrative features. The first layer of DID is preventive in nature and is provided through the implementation of facility procedures that provide chemical storage requirements. These storage requirements maintain separation of chemicals that could react and produce hazardous chemicals and, therefore, reduce the opportunity for a chemical accident. The second layer of DID is mitigative in nature and is provided through the requirement for facility personnel to wear protective clothing and respirators (as needed) when handling hazardous chemicals. This layer of DID is supplemented by the procedures for spill control and emergency response as previously mentioned. Thus, these requirements and procedures result in mitigation of the consequences of a chemical accident.

In addition to the seven events that were evaluated based on the hazard evaluation of Section 3.3.2.3, the nuclear criticality events were evaluated to identify DID administrative features associated with the prevention of a nuclear criticality. The following administrative features contribute to DID by contributing to the prevention of a nuclear criticality:

- Procedures for the receipt of nuclear material
- Sample labeling system
- Tracking system for fissile material
- Procedures for inventory control and verification
- Limited number of containers of nuclear material shipped at one time

The F/H Lab also has established inventory limits for radiological material. These radiological inventory limits result in limits on the maximum consequences associated with any of the potential events and prevent an inadvertent nuclear criticality. The maximum facility radiological inventory is discussed in Section 3.3.2.2 and the TSR discussion below. Radiological inventory limits for individual buildings are provided in Tables 3.3-3 and 3.3-4. These inventory limits provide an additional layer of DID for the F/H Lab.

ENVIRONMENTAL PROTECTION

The potential for large material releases to the environment is minimized by the design features and administrative features that contribute to DID. These F/H Lab design features and administrative features (discussed previously) protect the public, workers, and the environment. Thus, each of the design features and administrative features that contribute to DID also contributes to environmental protection. As a result, no large releases with the potential to cause significant environmental damage exist.

This evaluation is qualitative in nature and does not require quantitative verification. No specific EGs have been developed for the environment. Environmental damage from accidental releases is adequately addressed by the following:

- Limits on releases external to the building inherent in the EGs for protection of the public
- Numerous legally enforceable restrictions on normal operational releases

- Notification and response requirements for releases of RQs of 40 CFR 302.4 (Ref. 44)
- Good engineering practices

ACCIDENT SELECTION

The accident analysis requires a formal quantification of accidents that represent a complete set of bounding conditions. The identification of these accident scenarios results from the hazard evaluation ranking of the complete spectrum of facility accidents as provided in Appendix 3B. The hazard evaluation process for the F/H Lab identified 74 potential events involving hazards and hazardous materials that are present in the facility. These potential events were ranked as described in Section 3.3.2.3. As previously demonstrated, the hazard evaluation determined that none of the events associated with the F/H Lab represent a major concern (Risk Rank A) to the MOI (Ref. 2). In addition, only one event represents a concern (Scenario Risk Rank B) for the MOI, while 26 events represent a concern for the CW. Based on the hazard evaluation with 8 events challenging the CW (Risk Rank A), the events were identified for a detailed quantitative accident analysis.

FWs have been considered in this DSA and in accident selection. FWs are considered in the subsections of Section 3.3 that address DID and worker safety. The F/H Lab CHA (Ref. 15) identified 15 Risk Rank A events and 30 Risk Rank B events for the FW. These events include fires, explosions, and spills. These events are selected for further accident analysis.

Events that had either moderate or high consequences for the FW and were selected for facility controls are identified in Appendix 3C.

Doses to FWs are not calculated in this DSA primarily because no adequate methodology exists for calculating meaningful consequences at the point of source term release. Moreover, emphasis on FW doses can be potentially misleading in assessing the risk to the general public and to individuals outside the facility.

Many process-related events (e.g., fires, container ruptures, uncontrolled reactions) have occurred during the operational history of the F/H Lab. Therefore, process-related events that provide bounding conditions are also further analyzed as part of a detailed quantitative accident analysis. In addition, while natural phenomena events do not require additional quantitative accident analysis based on the hazard evaluation, they are also analyzed further. Natural phenomena events involve the entire facility inventory and provide bounding conditions for the detailed quantitative accident analysis. Additional natural phenomena events that are further analyzed include straight winds and tornadoes. Extremes in temperature, snow, rain, and lightning may adversely affect operations but do not result in accident sequences that lead to direct releases of radioactive materials, therefore eliminating the requirement for any further analysis. Flooding is not considered a credible initiator due to the topography of SRS and surrounding area, therefore eliminating the requirement for any further analysis. Radiological releases resulting from the strike of a meteorite are not analyzed due to the low probability of this event.

Since the F/H Lab analyzes fissile material, nuclear criticality events must also be evaluated. The hazard evaluation determined that none of the nuclear criticality events require additional quantitative accident analysis because a nuclear criticality at the F/H Lab is a BEU event (i.e., incredible). However, to provide a sound engineering basis for this determination, detailed nuclear criticality analyses were performed previously for the F/H Lab. The consequences of nuclear criticality events are further analyzed as Beyond DBAs.

The quantitative accident analyses discussed above result in the determination of potential radiological consequences associated with the F/H Lab. In addition to the radiological hazard evaluations, DOE-STD-3009-94 requires the identification and evaluation of chemical hazards associated with the F/H Lab (Ref. 2). Chemical hazards were identified in Section 3.3.2.1. The potential consequences associated with bounding chemical hazards analyses were determined in the Hazards Assessment Documents (Ref. 28, 29). As discussed in Section 3.3.2.2, these Hazard Assessment Documents resulted in facility classifications of General Use for each of the F/H Lab buildings. This indicated that bounding chemical accidents result in insignificant consequences to the MOI and the individual at the OEP. However, in order to satisfy additional criteria provided in Procedure 2.25 of Manual E7, a quantitative analysis was performed for chemical releases (Ref. 18, 43). This analysis provides worst case consequences resulting from releases of the chemical inventory and establishes acceptable inventory limits for chemicals such that criterion outlined in Reference 18 are met.

A quantitative accident analysis is not performed for those events identified in the hazard evaluation as resulting in injury to personnel from industrial accidents (characterized as E-5 events in the preliminary hazard evaluation). As discussed in Section 3.3.1.1, in accordance with the guidelines of DOE-STD-3009-94, it is not the intention of the DSA to cover common industrial hazards.

In addition, while natural phenomena events do not require additional quantitative accident analysis based on the hazard evaluation, they are also analyzed further. Natural phenomena events involve the entire facility inventory and provide bounding conditions for the detailed quantitative accident analysis. Additional natural phenomena events that are further analyzed include, straight winds, and tornadoes.

Four significant sources of externally induced failure mechanisms were identified as applicable to the F/H Lab: aircraft crash, vehicle crash, adjacent explosions, and adjacent fires. The adjacent explosions and adjacent fires are not considered credible accident initiators for the release of radioactive material from the F/H Lab and, therefore, are not analyzed further. The aircraft and vehicle crashes are considered an Extremely Unlikely occurrence. For such an accident, the consequences would certainly be bounded by the consequences of the facility fire. Therefore, the vehicle crash and aircraft crash accidents are not analyzed further. The above type accidents would be mitigated by the SRS Emergency Preparedness Program.

The hazards analysis for LR-56S Loading Station identified no events whose unmitigated consequences exceeded offsite EGs or challenged previously analyzed events (Ref. 48). Therefore, no events from LR-56S Loading Station are analyzed in the accident analysis Section 3.4. However, an evaluation of some selected accidents was performed to support increased inventory for the LR-56S (Ref. 96). The bounding scenario of fire, when LR-56S transport

tanker is present, gave a dose of 3.7E+0 roentgen equivalent, man (rem) and 8.7E-3 rem to the 100 m and MOI receptor, respectively. Dose from a spill in the form of a line break was estimated at 1.9E-01 rem at 100 m. An explosion is not considered as a loading station event since the LR-56S transport tanker falls under the OSA when in a shipping configuration without ventilation. The facility protects the safe shipping window for the OSA and the receiving facility limits for Lower Flammability Limit (LFL) through facility procedures based on radionuclide loading and fill volume.

3.4 ACCIDENT ANALYSIS

The F/H Lab was analyzed for potential radiological hazards, beginning with the development of initiating events and continuing with source term development and consequence evaluation for postulated accidents. The potential chemical releases were also evaluated in subsequent revisions. The principal purpose of the accident analysis is to identify any Safety Class and Safety Significant SSCs and TSRs needed for the protection of the public and workers.

3.4.1 METHODOLOGY

This section summarizes the methods used to quantify the consequences of the postulated accidents. Included in this discussion are a description of the computer codes used in the consequence calculations and a summary of initiating events and source term determinations.

3.4.1.1 Computer Codes Used for Calculating Consequence

RADIOLOGICAL CONSEQUENCE

Radiological consequences are calculated for the MOI, the individual at the OEP and the individual defined as CW. The MOI is defined as the theoretical individual at the closest point on the site boundary at the time of the accident. The individual at the OEP is defined as the theoretical individual located 0.4 miles from the facility. The individual defined as CW is the theoretical individual located 100 meters (0.06 miles) from the hazard.

The onsite receptors at 640 meters (0.4 miles) and 100 meters (0.06 miles), and the MOI at the site boundary are theoretical in the sense that no individual is actually expected to remain at that exact location for the duration of the 2-hour release period. While there may likely be an onsite receptor closer to the release point, the duration of the stay at that location of that individual is likely to be much less than the assumed release period. (Emergency personnel who may be near the release point for the duration of the release are not being modeled.)

For the initial issue of the F/H Lab SAR, the associated radiological consequences were analyzed for each accident scenario postulated using either the AXAIR89Q, the MELCOR Accident Consequence Code System (MACCS), or the AXAOTHER computer codes (Ref. 52-57). For that issue, the AXAIR89Q code was used to calculate the consequences resulting from the release of radioactivity to the atmosphere for events other than fires, high-velocity straight winds, or tornadoes. The MACCS code was used to calculate the consequences of radioactive material released due to fires. The AXAOTHER code was used to calculate the consequences associated with events caused by high-velocity straight winds or tornadoes.

For the F/H Lab SAR revision 1, the MACCS code is used to re-evaluate consequences of radioactive material released due to a 772-F and 772-1F Full Facility Fire and a Sample Tunnel Spill. Hand calculation was used to re-evaluate consequences of releases due to tornadoes at Buildings 772-F and 772-1F.

For the F/H Lab DSA revision 2, the MACCS code is used to re-evaluate consequences of radioactive material released due to a propane explosion in 772-F.

For the F/H Lab DSA revision 4, the MACCS code is used to re-evaluate the tornado consequence for 772-1F and the consequences of a deflagration that replaces the propane explosions for 772-F and 772-1F

For the F/H Lab DSA Chapter 3, revision 5, the MACCS2 code is used to evaluate consequences of radioactive material released during a bounding vehicle impact and resultant fire event for the B-25 Storage Area (Ref. 89, 90). Fire, earthquake, straight wind, and tornado consequence evaluations are also provided, but are not explicitly included in this revision (Rev. 5) of Chapter 3.

For the F/H Lab DSA Chapter 3, revision 8, the MACCS2 code along with EM IG (Ref. 88) is used to evaluate consequences of radioactive material released during full facility fires and explosions. Earthquake, straight wind, and tornado consequence evaluations are also provided, from previous analysis.

The computer codes estimate doses due to inhalation and gamma-shine from immersion in the cloud. None of the calculations consider food pathways.

AXAIR89Q

Radiation consequences from inhalation of radionuclides in the air depend on the following:

- Quantity of radionuclides released
- Relative air concentration (χ/Q)
- Physical, chemical, and radiological nature of the radionuclides
- Biological parameters (e.g., breathing rate)
- Dry deposition of non-noble gas radionuclides

Standard breathing rates for adults are used in the AXAIR89Q code for calculating consequences for the MOI and the individual at the OEP (Ref. 58).

Radiation consequences from gamma-shine result from radiation emanating from the traveling plume and are affected by spatial distribution of the radionuclides, the energy of the radiation, and the extent of shielding. In the AXAIR89Q code, no shielding is assumed for the individual receiving the maximum dose. The gamma-shine doses are calculated using the nonuniform Gaussian model because of its more realistic modeling as compared to the conventional uniform semi-infinite plume model.

Input data include the following:

- A 2-hour release period
- Site-specific atmospheric factors using the 1987-1991 meteorological database

- International Commission on Radiological Protection (ICRP), Publication 30 Dose Conversion Factors (DCFs) (Ref. 59)
- 99.5% meteorological conditions for the MOI and 50% meteorological conditions for the individual at the OEP

Worst-case doses to the MOI are determined by the AXAIR89Q code by calculating the dose for each of 16 sectors for 99.5% meteorological conditions and then selecting the worst dose of these 16 sectors. The dose to the onsite receptor at 640 meters (0.4 miles) is determined by the AXAIR89Q code calculating the dose on a sector-independent basis for 50% meteorological conditions.

In addition to the use of worst-case, worst-sector meteorology and conservative breathing rates and shielding factors, the AXAIR89Q code takes no credit for the probable plume rise resulting from stack releases for operational-related events.

MELCOR Accident Consequence Code System

Radiation consequences from inhalation of radionuclides in the air depend on the following:

- Quantity of radionuclides released
- χ/Q
- Physical, chemical, and radiological nature of the radionuclides
- Biological parameters (e.g., breathing rate)
- Dry deposition of non-noble gas radionuclides

An occupational breathing rate is used by the MACCS code.

Radiation consequences from gamma-shine result from radiation emanating from the traveling plume and are affected by spatial distribution of the radionuclides, the energy of the radiation, and the extent of shielding. In the MACCS code, no shielding is assumed for the individual receiving the maximum dose.

Input data include the following:

- A 2-hour release period or 3 minute duration for a sample tunnel spill, and B-25 Staging Area events
- Site-specific atmospheric factors using the meteorological database
- ICRP-30 DCFs (Ref. 59)
- ICRP, Publication 68 and 72 DCFs
- 95% meteorological conditions for the MOI without regard to sector and 95% meteorological conditions for the individual at the OEP without regard to sector

- CW consequences are calculated using 95% meteorological conditions, including the current B-25 Staging Area (Ref. 90)

AXAOTHER

The radiological consequences determined from the AXAOTHER code include doses to the MOI (Ref. 57). The exposure pathways considered in the AXAOTHER code include inhalation of radionuclides and immersion in the plume.

Radiation consequences from inhalation of radionuclides in air depend on the following:

- Quantity of radionuclides released
- χ/Q
- Physical, chemical, and radiological nature of the radionuclides
- Various biological parameters (e.g., breathing rate)

Standard breathing rates and 50-year inhalation dose commitment factors for adults are used in the AXAOTHER code for calculating consequences to the MOI (Ref. 58, 59).

Radiation consequences from gamma-shine result from radiation emanating from the traveling plume and are affected by the spatial distribution of the radionuclides, the energy of the radiation, and the extent of shielding. In the AXAOTHER code, no shielding is assumed for the individual receiving the maximum dose. The gamma-shine doses are calculated using a uniform plume model because only groundlevel dispersion factors associated with high-velocity straight winds and tornadoes are known.

AXAOTHER estimates doses using χ/Q input values.

Gaussian models do not apply to extreme weather conditions such as tornadoes. Atmospheric transport and dispersion of material from the facility into the environment during a tornado can be modeled using the χ/Q determined from a SRS-developed model [Weber and Hunter, 1996]. In this model, radiological or chemical material is entrained into the tornado vortex at ground zero, rises to the height of the mesocyclone clouds that produce the tornado, and is eventually carry the back down to the ground by downdraft. Radiation consequences from the inhalation of radionuclides suspended in the air during a tornado depend on the following:

- Quantity of radionuclides released
- The χ/Q
- Physical, chemical, and radiological nature of the radionuclides
- Biological parameters (e.g., breathing rate).
- Input data include the following:
- Affected inventory quantity and respirable Airborne Release Fraction (ARF)

The χ/Q parameter designated for a specific class tornado (assumed to be either Fujita - 2 or Fujita - 3) and translation speed and applied for the distance from the facility to the receptor

- The occupational breathing rate
- ICRP-30 DCFs or equivalent ICRP-68/72 DCFs.

CHEMICAL CONSEQUENCE

Chemical consequences resulting from the potential release of the chemical inventory are evaluated for an onsite receptor located at a distance of 100 meters and for an offsite receptor located at the site boundary at a distance of 9.4 kilometers.

Chemical inventory limits are established by calculating the maximum quantity of material that can be released without exceeding ERPG-2 or equivalent values. The associated chemical consequences resulting from a potential release of the chemical inventory are analyzed using the MACCS computer code.

Input data include the following:

- A 15-minute release period
- Site-specific atmospheric factors using the 1987-1991 meteorological database
- 95% meteorological conditions for the offsite receptor at 9.4 km and 50% meteorological conditions for the onsite receptor at 100 m without regard to sector

3.4.1.2 Scenario Development

Potential accidents are grouped into three categories based on accident initiators: manmade operational-related events, manmade externally induced events, and natural phenomena events.

The manmade operational-related events analyzed include explosion, fire, uncontrolled reaction, and minor operational-related accidents (i.e., leak, spill, overflow, pluggage, drum rupture, and drop/fall). Operational-related events are analyzed in Section 3.4.2.

The manmade externally induced events considered for analysis include aircraft crash, vehicle crash, adjacent explosion, and adjacent fire. The adjacent explosion and adjacent fire are not considered credible accident initiators for the release of radioactive material from the F/H Lab and, therefore, are not analyzed further. The vehicle and aircraft crashes are considered an Extremely Unlikely occurrence. For such accidents, the consequences would certainly be bounded by the consequences of the facility fire. Therefore, the vehicle crash and the aircraft crash accidents are not analyzed further.

The natural phenomena events analyzed include straight wind, tornado, and earthquake. These natural phenomena events are analyzed in Section 3.4.2.

Frequencies for manmade operational-related events were calculated by evaluating data obtained from operating experience as recorded in the SEPR database (Ref. 39). Operating experience

was taken from an operating period that varies for the different events. Leaks, spills, overflows, pluggage, and drops/falls were counted from 1970 to 1994. Fire, explosion, airborne contamination (from a fire), uncontrolled reactions, eructation, and natural phenomena events were counted from the data for which operating experience was available in the SEPR database. Database information was sorted by area (F Area), facility (Buildings 772-F and 772-1F), operation (spill, leak, overflow, uncontrolled reaction, corrosion, nuclear criticality potential, airborne contamination [from fire], explosion, pluggage, drop/fall, fire, eructation, and natural phenomena), and equipment (various). If the events in these sorts were determined to be applicable, they were counted and the location of the event was recorded (Ref. 60).

The number of events for each operation in Building 772-F was then divided by the number of years of operating experience examined. The number of events for each operation in Building 772-1F was divided by the number of years of operation (7 years) (Ref. 60).

Table 3.4-1 presents the operational-related frequencies for the F/H Lab.

3.4.1.3 Source Term Analysis

To determine the amount of curies of each isotope released to the environment (i.e., the source term), the facility inventory was determined and the appropriate ARFs and filter penetration factors were applied to each radionuclide in the inventory to determine the source term. This section contains a generic summary of the source term development used for all the accidents described in this section. Specific source term development is included in the discussion of each individual accident.

The higher ARF*RF value associated with a burning solution containing Pu is applied to any combustible or flammable solution. The definition of flammable and combustible should be consistent with the terms as defined in NFPA 30. This applies to any liquid with a flashpoint measured per the requirements in NFPA 30. For scenarios associated with severe facility fires, there is high potential for liquid ignition, even if the flashpoint is well above ambient conditions.

RADIONUCLIDE INVENTORY

The best-estimate and bounding inventories of radionuclides were developed in earlier revisions of the SAR which consist of alpha emitters, beta emitting heavy metals, fission products or other mixed beta-gamma emitters, and H-3 in the form of tritiated water. Design basis accidents for fire events involving Building 772-F and Building 772-1F were analyzed only with a bounding inventory.

For the purpose of calculating the consequences of releases in the initial version of the SAR, the maximum quantities of radionuclides in individual laboratories in the F/H Lab are assumed to be present, although maximum quantities in all laboratories at the same time would be prohibited by the maximum facility limits. In addition, for laboratories where an assortment of isotopes may be present, maximum quantities of the isotopes that provide the highest absorbed doses are assumed.

The alpha emitters are controlled by a single alpha-Ci limit for the facility. They may include some Pu-238 in solid or liquid form (some Pu-238 is in the form of calibration sources and not available for release). Material Control and Accountability material type 50 (Pu-239, impurities and daughters) as a solid (e.g., metal or oxide) or dissolved in combustible or non-combustible liquid. In the bounding (offsite) consequence analyses, the alpha emitters are conservatively represented by Am-241, because it results in the largest dose on a per Ci basis and solids are assumed to be in the more reactive metal chemical form. For some of the best-estimate analyses (onsite) only 20% of the alpha is the ingrown Am-241, as it is not realistic to expect samples with higher levels than this and solids that assume to be an appropriate percentage of the source term are in metal form.

The beta emitting heavy metals are conservatively represented by Pu-241.

With regard to fission products or other mixed beta-gamma emitters, excluding Pu-241 and H-3, all the mixed beta-gamma emitter isotopes that appear in the Hazards Assessment Document for Buildings 772-F and 772-4F are modeled in the accident analyses for Buildings 772-F and 772-4F (Ref. 28). Conservative amounts of all fission products or other mixed beta-gamma emitters, excluding Pu-241 and H-3, are used in the calculations, and the bounding inventory for all mixed beta-gamma emitters (i.e., 2,600 Ci in Building 772-F) is used for the isotope that is determined in the analysis to result in the largest dose to the receptor, either Sr-90 or Ru-106. The isotope that results in the largest dose to the receptor is dependent on the dose factor associated with the isotope (i.e., the dose delivered to the receptor in rem per Ci of isotope absorbed) and on the ARF used for the isotope (which is dependent on the accident scenario). The approach used for modeling fission products or other mixed beta-gamma emitters, excluding Pu-241 and H-3, for Buildings 772-F and 772-4F is, for some accidents and for some isotopes, more conservative than required by the Hazards Assessment Document for Buildings 772-F and 772-4F. However, in all accidents analyzed, the dose to the receptor is dominated by the alpha-emitting isotopes absorbed rather than the mixed beta-gamma emitters.

For Building 772-1F, the bounding inventory for all fission products or other mixed beta-gamma emitters, excluding Pu-241 and H-3, (i.e., 210 Ci in Building 772-1F) is used for the isotope that is determined in the analysis to result in the largest dose to the receptor, either Sr-90 or Ru-106, as described in the previous paragraph. The approach used for modeling mixed beta-gamma emitters for Building 772-1F is conservative and consistent with the Hazards Assessment Document for Building 772-1F (Ref. 29). However, in all accidents analyzed, the dose to the receptor is dominated by the alpha-emitting isotopes absorbed rather than the mixed beta-gamma emitters.

Building 772-F

Building 772-F contains separate laboratories that are used to analyze samples from various stages of the separations, actinide stabilization/characterization, and waste management processes; therefore, samples from different laboratories have different radionuclide distributions. The Building 772-F radiological inventory limits are provided in S-CLC-F-00328 and S-CLC-F-00637 and are listed in Table 3.3-3 (Ref. 42, 95). Maximum inventories are assumed to be involved in an accident.

Building 772-1F

Building 772-1F also contains separate laboratories that are used to analyze samples from various stages of the separations and waste management processes; therefore, different laboratories have different radionuclide inventories. The Building 772-1F radiological inventory limits are provided in S-CLC-F-00328 and S-CLC-F-00637 and are listed in Table 3.3-4 (Ref. 42, 95). Since Building 772-1F was determined to be a Hazard Category 3 facility, the analysis of the consequences of radionuclide releases conservatively uses the maximum facility inventory for the source term (Ref. 29). The analysis assumes that the maximum facility inventory can be present in any laboratory room.

B-25 Waste Container Staging Areas

The B-25 waste container staging areas outside the F/H Lab are limited to a maximum inventory, which is listed in Table 3.3-5 (Ref. 91). This maximum inventory is a TSR limit and is changed for this F/H Lab DSA Chapter 3 revision (Rev. 5).

Building 772-4F

Building 772-4F is a support facility for Building 772-F and houses equipment associated with the Building 772-F main exhaust system. The Building 772-4F estimated radiological inventory, provided in S-CLC-F-00328, remains unchanged for this F/H Lab DSA revision and is listed in Table 3.3-6 (Ref. 42). This inventory is based on the monitored radioactive material that was previously released from the Building 772-F stack and that would have been captured on the Building 772-4F HEPA filters had they been in existence. These monitored releases were normalized to a 12-month time interval and then multiplied by 50 to achieve a 50-year accumulation on the HEPA filters (Ref. 61).

CHEMICAL INVENTORY

The consequences resulting from the potential release of chemicals were evaluated to determine chemical inventory limits (Ref. 43). The inventory limits are calculated based on the assumption that the entire quantity of the chemical that is in releasable form is involved in an accident. The limits apply to the combined chemical inventory of Buildings 772-F and 772-1F and are listed in Table 3.3-7.

Building 772-4F and the B-25 waste container staging areas do not have a significant chemical inventory.

HIGH-EFFICIENCY PARTICULATE AIR FILTER PENETRATION

A filter penetration factor is determined for accidents in which HEPA filters are credited for reducing radionuclide releases. HEPA filter stage failure (i.e., failure to meet efficiency specifications) is accounted for in the estimate of the filter penetration factor. Filter penetration factors account for filter efficiencies when the filter meets operating specifications and when the

filter fails to meet specifications. The filter penetration factors are then multiplied by the inventory to calculate radionuclide releases.

Considering both filter unavailability and efficiency, the fractions of radionuclides penetrating up to three stages of filters in a series are summarized as follows (Ref. 61):

	Each Stage	Multiple Stage
First-Stage Filter	4.9E-03	4.9E-03
Second-Stage Filter	1.0E-02	4.9E-05
Third-Stage Filter	1.0E-02	4.9E-07

Building 772-F

For all operational-related events, except fires, the radionuclides are assumed to be released from the new 190-Foot stack east of Building 772-F by way of the Building 772-4F ventilation system. Room, radiohood, and radiobench exhaust is discharged by the main exhaust system, which uses three stages of HEPA filters, two stages are leak testable. Glovebox exhaust is discharged by way of the offgas exhaust system, which uses two stages of leak testable HEPA filters and two stages of leak testable HEPA filters in 772-4F. In addition, typical gloveboxes are equipped with non-leak testable HEPA filters located on the inlet and outlet ports of each box. Three stages of filtration can be credited to the main exhaust system, and four stages of leak testable HEPA filters to the offgas system. However, only one stage of main exhaust system HEPA filters are credited in the analyses, giving penetration factors of 4.9E-03. Some of the Calculations maintained for information in the SAR listed in Table 3.4-2 Part B used a filter penetration factor of 4.9E-5 for two stages.

Beyond design basis calculations for all DBAs are also performed without taking credit for the sand filter (no longer in the air flow path), HEPA filtration, or a stack release.

Building 772-1F

For operational-related events, except fires, radionuclides are assumed to be released from the 135-Foot stack located at Building 772-1F. Room, radiohood, and radiobench exhaust is discharged by way of the main exhaust ventilation system, which uses two stages of leak-testable HEPA filters. Glovebox exhaust is discharged by way of the offgas exhaust system, which uses three leak-testable HEPA filters and includes two stages of filters in the main exhaust system. However, the analysis assumes that only one stage of HEPA filters is operable at all times; therefore, a filter penetration factor of 4.9E-03 is used as discussed above.

Beyond design basis calculations for all DBAs are also performed without taking credit for HEPA filtration or a stack release.

3.4.1.4 Consequence Analysis

Unless the MACCS computer code is used, the MOI and the worker doses are calculated from a 1-Ci release of each radionuclide using the effective dose equivalent from the AXAIR89Q and AXAOTHER (straight wind and tornado events only) computer codes. This effective dose equivalent factor is multiplied by the source terms to obtain the consequence for the MOI and for the individual at the OEP. Table 3.4-2 summarizes the design basis consequence calculations for the F/H Lab. The design basis consequence calculations are presented in Appendices 3D through 3G.

Table 3.4-3 summarizes the beyond design basis consequence calculations for the F/H Lab. The beyond design basis consequence calculations are presented in Appendix 3H.

3.4.1.5 Comparison to Guidelines

Calculated consequences to the MOI are compared to the EGs in Manual E7 Procedure 2.25 (Ref. 18). EGs, in addition to MOI and OEP consequence values, are listed in Tables 3.4-4 and 3.4-5. Tables 3.4-4 and 3.4-5 also compare the MOI consequence values to the EGs.

3.4.1.6 Summary of Safety Class Structures, Systems, and Components and Technical Safety Requirement Controls

Safety class SSCs, for the purpose of this DSA, are defined as equipment performing a prevention or mitigation function necessary to keep hazardous material exposure to the public below the offsite EGs as required by DOE-STD-3009-94 (Ref. 2). The unmitigated frequencies and consequences of the accidents modeled in this section on accident analysis are compared with the functional classification guidelines to determine what SSCs need to be Safety Class or Safety Significant (Ref. 19). The functional classification guidelines are identical to the EGs. Items such as primary environmental monitors and most process equipment are not typically Safety Class SSCs.

There are no Safety Class SSCs identified for the F/H Lab.

3.4.2 DESIGN BASIS ACCIDENTS

This section analyzes DBAs for two major categories: manmade operational-related events (i.e., explosion, fire, uncontrolled reaction, and minor operational-related accidents [i.e., leak, spill, overflow, pluggage, drum rupture, and drop/fall]) and natural phenomena events (i.e., straight wind, tornado, and earthquake). Manmade externally induced events are not analyzed for the reasons given in the subsection "Accident Selection" of Section 3.3.2.3.

3.4.2.1 Explosion, Over-pressurization Accident

Explosions were postulated to occur in various locations in F/H Lab. Explosions would bound over-pressurization events. F/H Lab glovebox explosion event caused by the ignition of peroxides would result in a detonation, however; given the limited MAR as denoted in the CHA the consequences are negligible for the co-mingled material and the event is controlled using facility controls. Other explosive events would result in a deflagration rather than a detonation (Ref. 15, 62, 63). Bounding deflagration event will be discussed. Explosions are not considered as credible events due to flammable gas generation within a B-25/B-12 container per the CHA (Ref. 15). If LLW is placed in a closed top drum exposed to a fire, sufficient pressure could buildup to eject the top and a portion of the waste (Ref. 90).

3.4.2.1.1 DEFLAGRATION

Scenario Development

In the previous version of the SAR the bounding explosion event was described in terms of propane explosion (detonation). Calculation S-CLC-F-00533 (Ref. 64) evaluates an explosion inside a waste drum. Both VOCs and propane are evaluated as initiators of a deflagration not a detonation. Based on this calculation the pressure inside the waste drum created by a VOC deflagration is similar to that created by propane. In F/H Lab a propane deflagration would occur in a much larger space (the lab module) due to the vapor inventory found in a 20 lb cylinder but would likely involve the contents of a room. VOC deflagrations are most likely in confined spaces such as a glovebox. For simplicity the Material At Risk (MAR) for the two events would be the same.

Although localized pockets of gases at or above the respective LFL are always possible, the event considered involves the loss of normal ventilation while flammable vapors are produced by a propane release or a spill of a VOC. Since the analytical process performs limited dissolution of plutonium metal in confinement, hydrogen explosions were determined to not be credible events in F/H Lab (Ref. 15). Sufficient time passes without detection to permit the vapor space in confinement or in a laboratory module to reach a stoichiometric mixture for deflagration. The vapor is ignited by electrical devices, heat sources, or static discharge.

In F/H Lab propane is not permitted within the gloveboxes. However, propane could leak within the Lab module. A subsequent ignition of the vapor could impact the material contained within a glovebox.

The explosive events discussed above can occur within 772-F or 772-1F gloveboxes, shielded cells, radiohood, or radiobenches, or within the lab modules. If ventilation is running localized layers may be formed in the ducts resulting in OGE ducts or Main Exhaust ducts flashing over from the confinement event. Ignition of flammable gas (VOCs) can also occur in the HAD or LAD tanks. However as shown in calculation S-CLC-F-00589 (Ref. 62) the consequences of a VOC explosion inside a glovebox will bound a VOC explosion in the HAD or LAD tanks.

In absence of ventilation, the steady state equilibrium VOC concentration in a glovebox is controlled by the vapor pressure of the spilled inventory (Ref. 62). Since the glovebox is not designed to withstand high pressure, it is expected that a glovebox fails at the pressure of a few inches of water during a deflagration ejecting the hot gases. Such low pressure means the glovebox loses its structural integrity and confinement in the early stage.

To simplify the analysis the HAD and LAD tanks fail releasing the contents into the underground cells. No credit was taken for the tank or cell exhaust.

Source Term Analysis

Key assumptions used in the source term and the release analysis for the VOC explosion in Building 772-F are as follows (Ref. 62):

1. A wide variety of organic substances were considered to be at stoichiometric ratios for deflagration.
2. The Hydrogen Control prevents the introduction of VOCs when any experiment involving dissolution of metal in the glovebox is in progress. The accident evaluation made no attempt to define the mixture of hydrogen and VOC that could detonate
3. Given the flimsy nature of the glovebox structures, it is judged that it loses its structural integrity during a deflagration event. As a result, sustained fire is not expected, and releases due to thermal stress are not considered.
4. The MAR (powders) in the gloveboxes is stored in a container or containers. It is judged that the container(s) can provide protection for the powders against the pressure associated with a strong deflagration.

An explosion in a laboratory is assumed to involve the total activity of radionuclides in the laboratory. The inventory is shown in Table 3.3-3 and 3.3-4. The glovebox inventory is 42 Ci Alpha, 500 Ci Pu-241, 210 Ci β/γ, and 100 Ci H-3. The ARF*Respirable Fraction (RF) is based on the more conservative form of a powder.

Consequence Analysis

Radiological consequences resulting from an explosion in Buildings 772-F or 772-1F gloveboxes are calculated for the MOI and the CW at 100 meters using the methods described in calculation S-CLC-L-00589 (Ref. 62) and are summarized in Table 3.4-2.

During an explosion for Buildings 772-F and 772-1F, the ventilation system in 772-4F and 772-1F is assumed to remain intact. (Secondary fires after an explosion are bounded by the frequency and consequences of a facility fire.) The frequency of an explosion and secondary fire is a small contribution to the total frequency of a facility fire. In addition, the exhaust fans are assumed to continue running to provide a motive force to exhaust the material from the building. Continued operation of the exhaust fans is a worst-case assumption. Continued operation of the fans is reasonable since the exhaust fans for Building 772-F are located in Building 772-4F and

the HEPA are sufficiently remote to preclude interaction. Building 772-1F exhaust fans are located in Building 772-1F, but the exhaust fans are located at such a distance from the propane explosion that the explosion is not expected to affect the operability of the exhaust fans.

In Building 772-F, the room air exhausted by the ventilation system is normally filtered through three stages of HEPA filters with a combined filter penetration factor of 4.9E-07. However, for conservatism, this analysis assumes that no HEPA filters are functioning. In Building 772-1F, the air exhausted from the facility is normally filtered through two stages of HEPA filters with a combined filter penetration factor of 4.9E-05. Following an explosion event, this analysis takes no credit for filtration. A ground release is conservatively assumed.

In the event of a glovebox deflagration, the onsite and offsite doses are 18.1 rem and 7.7E-3 rem, which are below the respective EGs of 100 rem and 25 rem. For onsite doses 95% meteorology was utilized to calculate the consequence of the event.

Comparison to Guidelines

As shown in Table 3.4-4, the unmitigated radiological consequences resulting from the explosion in Buildings 772-F or 772-1F are below the EGs for the MOI and CW. Controls to reduce the consequence to the FW are described in the CHA (Ref. 15) and summarized in Appendix 3B.

SUMMARY OF SAFETY CLASS STRUCTURES, SYSTEMS, AND COMPONENTS AND TECHNICAL SAFETY REQUIREMENT CONTROLS

There are no Safety Class SSCs identified or credited as a result of this explosion accident. Consequences do not exceed guidelines even if no credit is taken for HEPA filters.

Safety Significant design features and TSR controls used to prevent or mitigate explosion (and over-pressurization) events (Ref. 15) are identified in Appendix 3B and SAR Section 5. These controls must be maintained to ensure that consequences associated with an explosion for the CW and FW remain below the EGs. The building is required to remain intact for the purpose of segmentation under design basis severe phenomenon events.

3.4.2.2 Fire Accident

A fire can potentially release contamination into the secondary confinement (i.e., radiohoods, radiobenches, and gloveboxes) and possibly bypass the secondary confinement, releasing radionuclides into the F/H Lab. The ventilation system provides filtration of the air prior to discharge to the atmosphere, minimizing the consequences of at least a small fire. Other prevention and mitigation features include the following:

- Design of the building (i.e., designed to provide relative separation and barriers from adjacent areas)
- Minimization of ignition sources and combustibles

- Storage of bulk flammable liquids in National Fire Protection Association approved cabinets
- Automatic sprinkler system and portable fire extinguishers

Since 1954, fires in the F/H Lab have not caused significant damage to the laboratories. Initiating events have included the following:

- Spontaneous combustion of waste (in waste storage areas)
- One occurrence of plutonium self-igniting (in a radiohood)
- Several fires resulting from placement of combustible materials near thermally hot equipment
- Other fires caused by flames from Bunsen burners, sparks from welding, or electrical fires

SCENARIO DEVELOPMENT

Accident scenarios for the various fires that are analyzed for the F/H Lab are discussed below. The frequency of the fire scenario is presented in Table 3.4-1. For reasons discussed below for Building 772-F, the nominal frequencies for the facility fires in this SAR are listed as Anticipated (Ref. 15).

Building 772-F, Facility Fire

The facility fire in Building 772-F is assumed to start in any room or a hallway which depending on combustible loading could involve multiple laboratory modules. The radiological inventory is assigned to the localized fire for the accident analysis but a more realistic inventory would be spread throughout the building within various confinements with the highest curie content held in gloveboxes. If this fire occurs on the main floor of Building 772-F, and the fire suppression system is not operable, the fire will quickly spread into the ceiling space. This ceiling space is formed from transite panels supported by wood ceiling joists protected by a wet pipe sprinkler system. Once the fire enters this area and the fire suppression system is not operable, there is little the SRS Fire Department can do to mitigate the damage within Building 772-F. The fire will spread until the entire building is fully involved. The airborne release of radionuclides is assumed to occur in three (possibly overlapping) phases.

In the first phase, material that may contain radionuclides is subjected to thermal stress: combustible liquids and combustible solids burn and noncombustible liquids boil. The resulting airborne release depends on the arrangement of the materials with respect to the fire, the form of radiological material, the containers involved and on expected conditions for the fire event (e.g., temperature). If mitigated by a fire suppression system, discharge unshielded inventory releases are limited to the partial contents of a room. If unmitigated by the fire suppression system, severe thermal stress results in a number of direct openings from containment units (e.g., gloveboxes) to the building and indirectly to the atmosphere.

In the second phase for an unmitigated event, gloveboxes collapse and debris (e.g., spalling concrete) falls from the ceiling. Airborne releases result from material falling and from debris falling on the material. Falling material is assumed to be in the physical form (i.e., liquid or powder) that maximizes the airborne release.

The third phase involves resuspension of material after the building has cooled. Resuspension occurs under nearly static conditions because the ventilation system is not operating and the building partially shields the material from external winds.

The nominal frequency in this DSA is listed as Anticipated. Due to the presence of sealed containers, such as glass or Teflon capable of withstanding temperature in excess of the boiling points of the liquids containing radiological material, flashing spray release is applied to the fire event in F/H Lab requiring mitigation for worker protection (Ref 15).

As a result of wildland fires at other DOE nuclear sites it was found that the wildland fire is just another Extremely Unlikely initiator for the facility fire, which is already the worst case event.

Building 772-F, Glovebox Fire

The frequency and consequences of a glovebox fire bound the frequency and consequences of all other facility fires. The glovebox fire in Building 772-F starts in a glovebox (as the result of an electrical short or similar problem) and due to Fire Protection program elements such as combustible loading monitoring, and flammable liquid monitoring, is limited to that glovebox. The fire is not initially detected by facility personnel and damages the glovebox containment (the gloves catch fire), allowing some material to escape into the room. The initial downstream HEPA filter for the glovebox and the room blinds and collapses. Because of dilution, the next two stages of filtration will probably work successfully. (The glovebox exhaust from the glovebox with a fire is immediately diluted in the offgas exhaust header with the exhaust from other gloveboxes that do not have a fire.) However, no credit was taken for HEPA filtration, only the passive barrier in 772-4F. The glovebox does not topple over but the glass may fail. Because of operator intervention or lack of contiguous combustibles, the fire does not propagate beyond the glovebox of origin.

Both the probability and the magnitude of a release caused by a single glovebox fire depend on the way the facility radionuclide inventory is distributed. For some radionuclides (e.g., Pu-238), the whole building inventory could be concentrated in one glovebox, or it could be distributed in several gloveboxes, depending on the operations in the laboratories at the time.

An inverse relationship existed between the frequencies and consequences of glovebox fires. A single glovebox fire could cause the release of the whole facility inventory of those radionuclides for which there are no glovebox limits, only if all those radionuclides are concentrated in one glovebox, and the fire is in this particular box. A more realistic distribution would support an Anticipated frequency but reduce the consequences.

Building 772-1F, Facility Fires

The facility fires in Building 772-1F occur in the same manner as previously discussed for the facility fire in Building 772-F except for a breech in the ceiling does not result in involving the entire building and concrete spalling is likely replaced by failed equipment hangers. For reasons discussed, the nominal frequency in this DSA is listed as Anticipated, which is significantly higher than the actual frequency (Ref. 15).

Building 772-4F, Full Facility Fire

The full facility fire in Building 772-4F involves HEPA filter media that are assumed to fail and burn. This scenario undergoes the same phases as previously discussed for the facility fire in Building 772-F. For reasons discussed, the nominal frequency in this DSA is listed as 1.00E-01 per year, which is significantly higher than the actual frequency. Although the events associated with fires are Anticipated the realistic frequency could be considered Unlikely based on the presence of fire protection elements that are denoted but not credited in the CHA (Ref. 15).

B-25 Waste Container Staging Areas Fire

In the B-25 waste container staging areas fire scenario, combustible waste material that contains radionuclides burns. No credit is taken for the ability of the B-25 waste containers to mitigate the consequences of the fire.

The frequency of a B-25 waste container staging areas fire is assumed to be 7.5E-02/year. This frequency is based on three waste receptacle fires outside the F/H Lab over 40 years of data (Ref. 65).

High-Activity Drain Tank Fire

A fire in a high-activity drain tank is an Extremely Unlikely occurrence and may be BEU or impossible for the following reasons:

- The high-activity drain tank contains mostly water with a possible layer of solids on the bottom of the tank that contains most of the radionuclides (i.e., plutonium).
- No significant layer of organic liquid has been found floating on the water during past inspections of the Tank C when it was active. Tank F is monitored during inspections for the formation of an organic layer in the tank.
- Few of the organics poured into the high-activity drain tank are immiscible with water and capable of forming an organic layer on the water.
- Organics are poured into the high-activity drain system only in small quantities typical of laboratory operations.
- The tanks are ventilated to prevent the accumulation of flammable vapors.

The frequency and consequences of a fire in the high-activity drain tanks are bounded by the frequency and consequences of a facility fire in Building 772-F, which is described in subsequent paragraphs (Ref. 15).

Hydrogen gas cannot build up within operative or inoperative high-activity drain tanks if the cell/tank ventilation should fail. Escape of hydrogen gas from the tanks by way of the open ports in Tanks C&D and passive filters in Tank F combined with pipes connecting at the top of Tank F (e.g., the high-activity drain tank drain header) and overflow pipe in Tank F is very likely.

Transuranic Waste Drum Fire

Transuranic (TRU) waste containers are used at Building 772-F and 772-1F. TRU waste is packaged according to levels of radioactivity and shipped for recovery or disposal. TRU waste, awaiting periodic shipment, is temporarily placed in Building 772-F, Rooms L-136A and L-136B, or other approved locations.

The consequences of a fire involving a TRU waste container would be well within the guidelines even if this incident were an Anticipated event, because the consequences are bounded by the consequences of a facility fire. In fact, both the frequency and consequences of a glovebox fire in Building 772-F bound the frequency and consequences of a fire involving a TRU waste container. This assertion is based on the fact that there are more gloveboxes in operation in Building 772-F than TRU waste containers in use. There are also more potential ignition sources associated with a glovebox than with a TRU container. Moreover, the maximum inventory of radionuclides in a glovebox is greater than the maximum inventory of radionuclides in a TRU container (i.e., 130 Ci of alpha-emitting radionuclides are allowed in a vented 55-gallon drum or other container that also may contain organic waste materials) (Ref. 67). Since TRU waste containers can collectively amount to significant alpha Ci inventories, individual TRU drum liner/drum containers are assigned an estimated content that conservatively bounds their alpha Ci content and are included in the inventory control system for the appropriate building until removed for shipment.

SOURCE TERM ANALYSIS

Inventories and Assumptions

Building 772-F, Facility Fires

A facility fire in Building 772-F has been re-evaluated for a flashing spray release. The facility radiological inventory limit is partitioned for Building 772-F. The partitioned inventory limits include assumptions made for the radionuclide distribution and for the MAR. The new inventory of radionuclides for a facility fire in Building 772-F is summarized in Table 3.4-7 (Ref. 95). Bounding inventories of radionuclides cannot be exceeded.

Key assumptions used in the source term and the release and propagation analysis for the facility fires in Building 772-F are as follows (Ref. 95):

Lab Module (Unshielded) Inventory Case - Facility Fire

1. Bounding radionuclide inventory is used.
2. 0.1 Ci of alpha-emitting materials are assumed to be in combustible liquid, the rest is assumed to be in liquid form (higher ARF and RF combination).
3. Plastic lands on 5% of oxide powder/residue.
4. None of the collapsed gloveboxes shield powder from falling debris.
5. A decontamination factor of 1 is used for building (offsite) and 5 for onsite.
6. Bounding ARFs are used.
7. 15 Ci alpha-emitting materials are assumed for Flashing Spray release.
8. There is no agglomeration of powders.
9. No credit is taken for containers to withhold radionuclide release.
10. No credit is taken for thermal plume rise.
11. 95% meteorology is used without regard to sector.
12. 100 cm surface roughness for Offsite and 3 cm surface roughness for onsite.
13. A ground level release is assumed.
14. Fire Suppression System limits MAR impact by a factor of 4.
15. Emergency Response limits consequences by a factor of 2

Note: Item 3 accounts primarily for the possibility that some plastic may fall on the radioactive material and burn, causing additional radioactive material to become airborne.

Glovebox (Shielded Inventory) Case – Facility Fire

1. Bounding radionuclide inventory is used.
2. 0.1 Ci of alpha-emitting materials are assumed to be in combustible liquid, the rest is assumed to be in liquid form (higher ARF and RF combination).
3. Plastic lands on 5% of oxide powder/residue.
4. None of the collapsed gloveboxes shield powder from falling debris.
5. A decontamination factor of 1 is used for building (offsite) and 5 for onsite.
6. Bounding ARFs are used.
7. 15 Ci alpha-emitting materials are assumed for Flashing Spray release.
8. There is no agglomeration of powders.
9. No credit is taken for containers to withhold radionuclide release.

10. No credit is taken for thermal plume rise.
11. 95% meteorology is used without regard to sector.
12. 100 cm surface roughness for Offsite and 3 cm surface roughness for onsite.
13. A ground level release is assumed.
14. Emergency Response limits consequences by a factor of 2

Note: The decontamination factor of 5 is a judgment based on the location of the material (on average, far away from pathways to the outside) and on characteristics of the gloveboxes (they will at least partially shield material from the air flow) and passive features of the Main Exhaust. This decontamination factor is conservative when applied to particles resuspended after the building has cooled.

The Ci released from Building 772-F during facility fires are listed in Appendix 3D, Tables 3D-3 and 3D-4.

Building 772-1F, Facility Fires

Facility fires in Building 772-1F has been re-evaluated based on new radiological inventory limits for Building 772-1F. Assumptions made for the radionuclide distribution and for the MAR were made significantly more conservative. The new inventory for facility fires in Building 772-1F is summarized in Table 3.4-9 (Ref. 95).

Key assumptions used in the source term analysis for the facility fires in Building 772-1F are as follows (Ref. 42, 68):

<u>Lab Module (Unshielded) Inventory Case - Facility Fire</u>

1. Bounding radionuclide inventory is used.
2. 0.1 Ci of alpha-emitting materials are assumed to be in combustible liquid, the rest is assumed to be in liquid form (higher ARF and RF combination).
3. Plastic lands on 5% of oxide powder/residue.
4. None of the collapsed gloveboxes shield powder from falling debris.
5. A decontamination factor of 1 is used for building.
6. Bounding ARFs are used.
7. 10 Ci alpha-emitting materials are assumed for Flashing Spray release.
8. There is no agglomeration of powders.
9. No credit is taken for containers to withhold radionuclide release.
10. No credit is taken for thermal plume rise.
11. 95% meteorology is used without regard to sector.
12. 100 cm surface roughness for Offsite and 3 cm surface roughness for onsite.

13. A ground level release is assumed.
14. Fire Suppression System limits MAR impact by a factor of 4.
15. Emergency Response limits consequences by a factor of 2

Note: Item 3 accounts primarily for the possibility that some plastic may fall on the radioactive material and burn, causing additional radioactive material to become airborne.

Glovebox (Shielded Inventory) Case – Facility Fire

1. Bounding radionuclide inventory is used.
2. 0.1 Ci of alpha-emitting materials are assumed to be in combustible liquid, the rest is assumed to be in liquid form (higher ARF and RF combination).
3. Plastic lands on 5% of oxide powder/residue.
4. None of the collapsed gloveboxes shield powder from falling debris.
5. A decontamination factor of 1 is used for building .
6. Bounding ARFs are used.
7. 10 Ci alpha-emitting materials are assumed for Flashing Spray release.
8. There is no agglomeration of powders.
9. No credit is taken for containers to withhold radionuclide release.
10. No credit is taken for thermal plume rise.
11. 95% meteorology is used without regard to sector.
12. 100 cm surface roughness for Offsite and 3 cm surface roughness for onsite.
13. A ground level release is assumed.
14. Emergency Response limits consequences by a factor of 2

The Ci released from Building 772-1F during facility fires are listed in Appendix 3E, Tables 3E-3 and 3E-4.

Building 772-4F, Full Facility Fire

The best-estimate and bounding inventories for the facility fires in Building 772-4F are the same and are summarized in Table 3.4-10 (Ref. 40).

Key assumptions used in the source term analysis for the facility fires in Building 772-4F are as follows (Ref. 40):

Offsite Case

1. Bounding radionuclide inventory is used.

2. A decontamination factor of 1 is used for the building.
3. Bounding ARFs are used.
4. No credit is taken for thermal plume rise.
5. 99.5% meteorology is used.
6. A 3cm surface roughness is assumed (Ref. 69).

Onsite Case

The onsite consequences are calculated under the same assumptions used for the offsite case except that 95% meteorology is used instead of 99.5% meteorology, and best-estimate ARFs/RFs are used.

The Ci released from Building 772-4F during a full facility fire are listed in Appendix 3F, Tables 3F-1 and 3F-2.

B-25 Waste Container Staging Areas Fire

The bounding fire scenario is a vehicle impact with ensuing fire. The inventory for a B-25 waste container staging areas impact fire is summarized in Table 3.4-11 (Ref. 90, 91).

Key assumptions used in the source term analysis for the B-25 waste container staging areas impact fire outside the F/H Lab are as follows (Ref. 90):

Offsite Case

1. The maximum inventory of the B-25 waste container staging areas is involved.
2. No credit is taken for the containers.
3. A bounding ARF of 1E-03 is used for impact, 1E-02 for fire (unconfined), and 5E-04 (confined) is used for all radionuclides, except tritium, that takes no credit for the steel containers. An ARF of one is assumed for tritium.
4. No credit is taken for thermal plume rise.
5. 95% meteorology and 3 cm surface roughness are used.
6. A groundlevel release is assumed.
7. It is assumed that 20% of total inventory is in ruptured containers, 27% of that inventory is ejected, and 18% of that inventory in unconfined.
8. The contents of all B-25 containers are 99% combustible waste and 1% combustible liquid.

Onsite Case

1. The onsite consequences are calculated under the same assumptions used for the offsite case.
2. The Ci released from a B-25 waste container staging areas bounding impact fire are provided in Reference 90.

Airborne Release Fraction and Source Term Determination

The source terms are determined using the following five-component linear equation from DOE-HDBK-3010-94 (Ref. 70).

Source Term = MAR x DR x ARF x RF x LPF

where:

MAR = Material at Risk (available inventory)

DR = Damage Ratio (fraction of MAR actually impacted by the accident condition)

ARF = Airborne Release Fraction (depends on situation) (Ref. 40)

RF = Respirable Fraction (depends on situation) (Ref. 40)

LPF = Leak Path Factor (determined by dividing 1 by a decontamination factor)

(The decontamination factors were obtained from S-CLC-F-00164 and are listed as assumptions for each scenario [Ref. 40].)

The values for tritium (obtained from S-CLC-F-00164) were simply assumed. As determined by analysis, tritium is not a large contributor to the onsite or offsite dose.

For Buildings 772-F and 772-1F, the dose factors for resuspension were based on a 24-hour release, and dose factors were based on 2-hour meteorological conditions. For B-25 impact/fire factors include 3-minute release with resuspension for 8-hour release.

CONSEQUENCE ANALYSIS

Radiological consequences resulting from facility fires in Building 772-F and 772-1F have been re-calculated using the new radiological inventory of Buildings 772-F and 772-1F. The radiological consequences for these fire scenarios are calculated for the MOI and the individual at the CW. The source terms for these calculations are presented in Appendix 3D, Tables 3D-3 and 3D-4, for Building 772-F and in Appendix 3E, Tables 3E-3 and 3E-4 for Building 772-1F.

Radiological consequences resulting from a facility fire in Building 772-4F are calculated for the MOI and the individual at the OEP using the methods described in Section 3.4.1.4 and the MACCS code. The calculations for a full facility fire in Building 772-4F are performed in S-CLC-F-00328 (Ref. 42).

Radiological consequences for the B-25 waste container staging areas fire are calculated for the MOI and the individual at the OEP (CW, 100 m) using the methods described in Section 3.4.1.4 and the MACCS2 code. The calculations for the B-25 waste container staging areas impact fire are performed in S-CLC-F-00606 (Ref. 90).

Consequences for all the fire events are summarized in Table 3.4-2. A glovebox fire bounds the consequences of facility fires in Building 772-F, the consequences given in Table 3.4-2 for a glovebox fire reflect changes made to the radiological inventory limits of Building 772-F.

COMPARISON TO GUIDELINES

As shown in Table 3.4-4, the radiological consequences resulting from the various fire scenarios are below the EGs.

SUMMARY OF SAFETY CLASS STRUCTURES, SYSTEMS, AND COMPONENTS AND TECHNICAL SAFETY REQUIREMENT CONTROLS

There are no Safety Class SSCs identified or credited as a result of the fire analysis.

Safety Significant design features and TSR controls applicable to the fire analysis used to mitigate fire events (Ref. 15) are identified in Appendix 3B. These controls must be maintained to ensure that consequences associated with fire remain below the EGs.

3.4.2.3 Uncontrolled Reaction Accident

Uncontrolled reactions are a rapid means of losing control of materials in a process. Uncontrolled reactions can be manifested in several forms including the following:

- Foaming
- Boiling over
- Gassing
- An undesirably high temperature
- Eructation (more violent than foaming and boiling over, but less violent than an explosion)
- Evolution of excessive contaminated or toxic vapors

Equipment is not usually damaged directly in an uncontrolled reaction (as it would be during an explosion); contamination, radionuclide dispersion, and corrosion are usual byproducts. The primary containment vessels are usually penetrated (i.e., unvented plastic bottles may rupture). However, the secondary confinement barrier (i.e., glovebox) remains intact. Such occurrences can cause the release of radioactive material into areas accessible to personnel. Prevention features in place for uncontrolled reactions include the following:

- Approved containers designed for chemical, gas, and sample handling
- Spill control ability of containment units
- Administrative procedures (i.e., reagent procedures)
- Training

SCENARIO DEVELOPMENT

Building 772-F

The frequency and consequences of a sample tunnel spill, which is described in 3.4.2.4, bound the frequency and consequences of an uncontrolled reaction in Building 772-F. Therefore, the consequences resulting from an uncontrolled reaction are not re-calculated for the new radiological inventory of Building 772-F. The scenario development of an uncontrolled reaction in Building 772-F included in the initial issue of the F/H Lab SAR is provided in the following paragraphs.

A review of the SEPR database identified the following hazardous events that have occurred in the F/H Lab's Building 772-F operating history (Ref. 39, 60):

- Over 23 years of data collection, there were three small container ruptures as a result of radiolysis in unvented containers (i.e., 1.36E-01/year):
  - A sample vial of RT-24 ruptured in a radiobench.
  - A sample of Pu-238 solution in a capped flask ruptured in a glovebox.
  - Cotton cheesecloth wipes impregnated with Pu-238 oxide powder caused the lid to blow off a sealed metal waste can inside a glovebox.
- Over 40 years of data collection, there were eight uncontrolled reactions. Six of these uncontrolled reactions occurred inside the laboratories of Building 772-F (i.e., 1.54E-01/year). Most of these events involved mixing incompatible liquids, and two events involved small-scale (milliliter) nitric acid reactions.

The frequency of an uncontrolled reaction in Building 772-F was calculated by adding the frequency of a container rupture with the frequency of an uncontrolled reaction inside the laboratories as previously described. Based on this calculation, the frequency of an uncontrolled

reaction in a laboratory at Building 772-F is 2.9E-01/year. As an additional conservatism, the uncontrolled reaction is assumed to occur in a glovebox in a laboratory at Building 772-F.

Both the probability and the magnitude of a release caused by a single glovebox uncontrolled reaction depend on the way the facility radionuclide inventory is distributed. For some radionuclides (e.g., Pu-238), the whole building inventory could be concentrated in one glovebox, or it could be distributed in several gloveboxes, depending on the operations in the laboratories at the time. For the initial issue of the F/H Lab SAR, a glovebox inventory limit of one-fifth of the building limit was established for other radionuclides (e.g., Pu-239). An inverse relationship existed between the frequencies and consequences of glovebox uncontrolled reactions. A single glovebox uncontrolled reaction could cause the release of the whole facility inventory of those radionuclides for which there are no separate glovebox limits (e.g., Pu-238) only if all those radionuclides are concentrated in one glovebox, and the uncontrolled reaction is in this particular box. The frequency of an uncontrolled reaction in a given glovebox is 6.17E-03/year, since there are 47 gloveboxes in Building 772-F. Similarly, the frequency of an uncontrolled reaction causing the release of one-fifth of the facility inventories of those radionuclides for which there are no separate glovebox limits is four times higher, 2.47E-02/year, because not more than four gloveboxes can each hold more than one-fifth of the facility inventory of a radionuclide. These frequencies are presented in Table 3.4-1.

Building 772-1F

The consequences of a sample tunnel spill, which is described in 3.4.2.4, bound the consequences of an uncontrolled reaction in Building 772-1F. This is due in part to the larger radiological inventory of Building 772-F, which is considered in the event of a sample tunnel spill. In addition, the frequency of an uncontrolled reaction in Building 772-1F and the frequency of a sample tunnel spill place the events in the Anticipated frequency bin. Therefore, the consequences of an uncontrolled reaction in Building 772-1F are not re-calculated for the new radiological inventory limits of Building 772-1F. The scenario development of an uncontrolled reaction in Building 772-1F included in the initial issue of the F/H Lab SAR is provided in the following paragraph.

There has been one uncontrolled reaction at Building 772-1F during 13 years of operations (Ref. 60). The frequency of an uncontrolled reaction in Building 772-1F is presented in Table 3.4-1. For Building 772-1F, no credit was taken for the probability that the entire facility inventory is contained in a single glovebox.

SOURCE TERM ANALYSIS

Building 772-F

As previously indicated, the consequences of an uncontrolled reaction in Building 772-F are not re-calculated for the new radiological inventory limits of Building 772-F. The Source Term analysis provided in the initial issue of the F/H Lab SAR for an uncontrolled reaction in Building 772-F is provided in the following paragraphs.

An uncontrolled reaction was assumed to involve the maximum radiological inventory of a single glovebox or radiohood. The maximum inventory of a glovebox was assumed to include 200 Ci of Pu-238, 40 Ci of plutonium type 50 material (assumed to be Pu-239), 500 Ci of Pu-241, and 2,450 Ci of H-3 (Ref. 40). Fission products or other mixed beta-gamma emitters, excluding Pu-241 and H-3, accompanying the plutonium were assumed to be present in a glovebox (i.e., approximately 680 Ci, mostly Ru-106, which is a worst-case fission product isotope in this accident scenario). The building maximum inventory of mixed beta-gamma emitters was assumed to be 2,600 Ci. The entire building maximum inventory of mixed beta-gamma emitters would not be expected to be located in one glovebox. Samples with significant fission product inventory are generally handled in the shielded cells. Moreover, even a fraction of 1/4 of the building maximum inventory of mixed beta-gamma emitters in a glovebox is a conservative estimate due to the radiation hazard to the FW. In any case, fission products or other mixed beta-gamma emitters, excluding Pu-241 and H-3, are a very small contributor to offsite and onsite doses for this accident compared with the plutonium isotopes.

An ARF of 2.0E-03 applied to radionuclides was considered appropriate for depressurization of a free volume above a liquid surface (Ref. 70). For ruthenium, an ARF of 1.0E-02 was assumed. For tritium, an ARF of 1.0E+00 was assumed.

It was further assumed that the offgas exhaust system remained operable and that all airborne material dispersed in the volume of the glovebox was discharged by way of the offgas exhaust system. Therefore, a filter penetration factor of 4.9E-05 was used for all radionuclides except H-3 as discussed in Section 3.4.1.3. For H-3, a filter penetration factor of 1.0E+00 was used.

The Ci released from the F-Canyon stack during an uncontrolled reaction are listed in Appendix 3D, Tables 3D-7 through 3D-12. Note that the values provided within these tables are based on the radiological inventories used for the evaluation of an uncontrolled reaction in the initial issue of the F/H Lab SAR.

Building 772-1F

As previously indicated, the consequences of an uncontrolled reaction in Building 772-1F are not re-calculated for the new radiological inventory limits of Building 772-1F. The Source Term analysis provided in the initial issue of the F/H Lab SAR for an uncontrolled reaction in Building 772-1F is provided in the following paragraphs.

An uncontrolled reaction in Building 772-1F was assumed to involve the entire building inventory (852 Ci). The ARFs, 1.0E-02 and 2.0E-03, as discussed above, were assumed for the consequence calculations for an uncontrolled release from Building 772-1F. In addition, an ARF of 1.0E+00 was assumed for H-3.

It was further assumed that the offgas exhaust system remained operable and that all airborne material dispersed in the volume of the glovebox was discharged by way of the offgas exhaust system. Therefore, a filter penetration factor of 4.9E-03 was used for all radionuclides except H-3 as discussed in Section 3.4.1.3. For H-3, a filter penetration factor of 1.0E+00 was used.

The Ci released from the Building 772-1F stack during an uncontrolled reaction are listed in Appendix 3E, Tables 3E-7 and 3E-8. Note that the values provided within these tables are based on the inventories and assumptions used for the evaluation of an uncontrolled reaction in the initial issue of the F/H Lab SAR.

CONSEQUENCE ANALYSIS

Radiological consequences resulting from an uncontrolled reaction in Buildings 772-F and 772-1F were calculated for the initial issue of the F/H Lab SAR for the MOI and the individual at the OEP using the methods described in Section 3.4.1.4 and are summarized in Table 3.4-2. For Building 772-F, the consequences were calculated in S-CLC-F-00118 (Ref. 71) and are presented in Appendix 3D, Tables 3D-7 through 3D-12. For Building 772-1F, the consequences were calculated in S-CLC-F-00122 (Ref. 65) and are presented in Appendix 3E, Tables 3E-7 and 3E-8.

Since uncontrolled reactions in Buildings 772-F and 772-1F are bounded by the consequences of a sample tunnel spill, the consequences given in Table 3.4-2 for uncontrolled reactions do not reflect changes made to the radiological inventory limits of Buildings 772-F and 772-1F. The consequences provided for uncontrolled reactions are based on the radiological inventories evaluated in the initial issue of the F/H Lab SAR.

COMPARISON TO GUIDELINES

The radiological consequences resulting from an uncontrolled reaction are below the EGs.

SUMMARY OF SAFETY CLASS STRUCTURES, SYSTEMS, AND COMPONENTS AND TECHNICAL SAFETY REQUIREMENT CONTROLS

There were no Safety Class SSCs identified or credited as a result of the uncontrolled reaction accident analysis. Consequences did not exceed the EGs even if no credit was taken for HEPA filters (see Section 3.4.3 on Beyond DBAs).

The only TSR controls used in the uncontrolled reaction analysis were the maximum radiological inventory limits of a single glovebox or of Building 772-1F. The radiological inventory limits of Buildings 772-F and 772-1F have changed and are considered in the bounding evaluation of a sample tunnel spill.

3.4.2.4 Other Minor Operational-Related Accidents

Other minor operational-related accidents considered in this analysis include leaks, spills, overflows, pluggage, drum ruptures, and dropped or fallen materials. These accidents are analyzed as a group even though each accident has a unique frequency (Table 3.4-1). The scenario development and source terms are the same for each accident. Prevention features in place for minor operational-related accidents include the following:

- Building design (i.e., piping, containment features, and ventilation system)
- Approved containers designed for chemical, gas, and sample handling
- Spill control ability of containment units
- Administrative procedures (i.e., reagent procedures)
- Training

Leaks are the result of liquids or gases escaping from confinement due to piping or equipment failure. Leaks are sometimes due to corrosion of piping or containers. Leaks usually result in liquid material falling to the room floor and/or bench top, or gas escaping to the atmosphere. Generally, most leaks are isolated and repaired before becoming a major problem.

Leaks pose a small but direct radiological risk to personnel. More significantly, however, leaks enhance the probability of assimilation through inhalation of airborne activity and the spread of contamination. The primary sources of leaks in the F/H Lab include decontamination sinks, water lines, and high-activity drains (Ref. 21).

Overflows occur when the volumetric capacity of a container is exceeded. Exceeding the vessel capacity will result in spillage onto the floor and/or bench top. The consequence of this event is the possibility of spreading contamination to uncontained areas, thereby increasing the risk of airborne activity and assimilation. The most frequent cause of an overflow in the F/H Lab is the inattention of the technician during the liquid waste removal process. These overflows occur when the technician is pouring the liquid waste from the vials and beakers into the plastic waste vessel containing the slurping line. Most container overflows inside containment units are controlled through the spill collection design of the units.

A spill is the result of solution escaping from its confinement other than by leakage or overflow. A spill usually results in the material falling either to the floor, onto the individual handling the material, or both. Spills impose a minor but direct radiological risk to personnel. More significantly, however, spills increase the probability of assimilation through absorption, inhalation, and the spread of contamination.

Pluggage normally involves either an obstruction in the line preventing a flow of liquid or an undesired restriction that reduces the capacity in the air exhaust system. Pluggage can result in localized facility contamination, increased potential for airborne activity, and reduced analytical operations. In the F/H Lab, the individual sink connections to the high-activity drain system are the most susceptible to pluggage.

Samples, chemicals, or equipment that is dropped or falls imposes a small but direct radiological hazard to personnel. Assimilation through absorption or inhalation increases the potential of personnel injury in cases involving toxic chemicals. Although this event is somewhat similar to spills, a separate frequency for this event was calculated. Hence, this analysis addresses the drop/fall event separately.

A TRU waste container placed in Building 772-F can also be involved in a minor operational-related accident. The container can be dropped, crushed, or knocked over and can spill or leak out the contents. The frequency of such an occurrence is included in the frequency of other minor operational-related accidents, which is calculated based on a review of the SEPR database (Ref. 39). The consequences of such an event are bounded by the consequences of a minor operational-related accident in a glovebox, which is described in the following paragraphs.

SCENARIO DEVELOPMENT

Frequencies for other minor operational-related accidents were calculated by evaluating data obtained from operating experience as recorded in the SEPR database (Ref. 39). Table 3.4-1 lists the frequencies for these minor operational-related events. These frequencies were calculated in S-CLC-F-00109 (Ref. 60), except for the following:

- The frequency of the rupture of a drum of wastewater contaminated with tritium on the Service Floor of Building 772-F is calculated in S-CLC-F-00118 (Ref. 71) taking into account the presence of three drums on the Service Floor and a rupture frequency for a single unit taken from WSRC-TR-93-262 (Ref. 72).
- The frequency of a leak, spill, or drop/fall accident involving a sample container in the sample tunnel, which connects to Building 772-F, is calculated based on information provided in S-CLC-F-00109 and the SEPR database. There were seven events (i.e., leaks, spills, or drop/fall accidents) in the sample tunnel over 24 years for a frequency of 2.9E-01/year.
- There have been no recorded overflow events in Building 772-1F; therefore, the frequency for an overflow from Building 772-F was assumed appropriate for Building 772-1F. The assumption that the frequency for an overflow event in Building 772-1F is bounded by the frequency of an overflow event in Building 772-F is reasonable given that laboratory operations in Building 772-1F are comparable to laboratory operations in Building 772-F.

SOURCE TERM ANALYSIS

This source term analysis considers only airborne releases of radionuclides as a result of other minor operational-related accidents. Liquid releases of radionuclides are not modeled for the following reasons. For other minor operational-related accidents involving liquids that do not readily evaporate, the liquid either is cleaned up or drains to the high-activity drain tank, the low-activity drain tank, or a drain sump (e.g., the five drain sumps on the Service Floor of Building 772-F). Disposal of liquids from the high- and low-activity drain systems is described in Section 2.5.3 of this DSA. Water in the drain sumps is discharged to the F-Area segregated

cooling water system. Water discharged from this system is actively monitored for alpha, beta, and gamma activity (but not tritium), and normally the water is discharged to an outfall. If activity is detected, the water is diverted to a basin and is processed through the Effluent Treatment Facility before being released to an outfall.

Liquid tritium releases have been modeled for a postulated reactor accident at SRS (Ref. 73). The maximum dose (i.e., water ingestion) to a hypothetical individual living on the Savannah River due to the accidental release of a unit Ci of tritium is calculated to be 1.3E-08 rem. The maximum dose to a hypothetical individual living on the Savannah River due to the accidental liquid release of the entire maximum inventory of tritium in Building 772-F (i.e., 10,570 Ci) is 1.37E-04 rem. This is a very small dose and another reason why accidental liquid releases are not modeled in this DSA. This consequence also bounds any liquid release of the maximum inventory of tritium in Building 772-1F (100 Ci).

Building 772-F

For the initial issue of the F/H Lab SAR, minor operational-related events as indicated above were assumed to occur in a glovebox or radiohood. Three additional minor operational-related events were also analyzed for Building 772-F in the initial SAR issue. These analyzed events included a rupture of one of the three drums of wastewater contaminated with tritium, a low-energy event (e.g., leak, spill, overflow, drop/fall, pluggage) on the Service Floor, and a leak or spill of radionuclides from a sample container in the sample tunnel.

The consequences of a sample tunnel spill bound the consequences of the minor operational-related events that were assumed to occur in a glovebox or radiohood (e.g., leaks, overflows, spills, plugs, drops/falls). In addition, the frequencies of these minor operational-related events and the frequency of a sample tunnel spill place the events in the Anticipated frequency bin. Therefore, the consequences of minor operational-related events in a glovebox or radiohood are not re-calculated for the new radiological inventory limits of Building 772-F. Instead, a bounding calculation of the consequences of a sample tunnel spill is performed for the new radiological inventory limits.

The sample tunnel is open to the environment. Past occurrences of leaks or spills in the sample tunnel have posed contamination concerns for the immediate area around the leak or spill and for the exterior of the package. Airborne release of radionuclides has not been noted in the event descriptions of these accidents, and no inhalation or uptake of radionuclides by onsite workers or the public has been recorded for these events.

The following assumptions used in determining bounding consequences for a sample tunnel spill are the same for onsite and offsite cases.

- Bounding radionuclide inventory is used. The bounding inventories of radionuclides for a leak or spill of radionuclides from a sample container in the sample tunnel is the same as the bounding inventories of Building 772-F, except for using transportable volume of tritiated water.

- All the alpha emitters are conservatively represented by Am-241, because it results in the largest dose on a per Ci basis.
- The beta emitting heavy metals are conservatively represented by Pu-241.
- The release occurs at room temperature.
- The expected mechanism of the release is evaporation and carry-over. However the release fractions used for these materials equally apply to the liquid or powder forms (Ref. 12), which are the worst forms at room temperature
- A decontamination factor of 1 is used for the building (Ref. 3).
- The gamma and beta emitting mixed fission products or other mixed beta-gamma emitters, excluding Pu-241 and H-3, are conservatively represented by Ru-106 as in Reference 12. In low temperature release this is a more conservative assumption than Sr-90 due to the high volatility of ruthenium under oxidizing conditions.
- No credit was taken for containers.

Since these assumptions are the same as the assumptions for the beyond design basis analysis for the minor operational-related event, the Ci released at ground level for the sample tunnel leak or spill are listed in Appendix 3H, Tables 3H-51 and 3H-52.

The rupture of one of the three drums of wastewater contaminated with tritium as evaluated in the initial issue of the F/H Lab SAR is unaffected by changes in the radiological inventory limits of Building 772-F. Therefore, the consequences of a drum rupture remain unchanged. The analysis of a drum rupture assumes that one full drum ruptures, spilling the wastewater onto the Service Floor. The wastewater then evaporates, resulting in the release of 2,707 Ci of tritium to the environment. The release is from the Building 772-4F stack through one stage of HEPA filters located in Building 772-4F. Therefore, a filter penetration factor of 4.9E-03 is assumed, with the exception of tritium. A filter penetration factor of 1.0E+00 is assumed for tritium as previously described. The Ci released from the stack resulting from a drum rupture are listed in Appendix 3D, Tables 3D-19 and 3D-20.

A low energy event on the Service Floor as evaluated in the initial issue of the F/H Lab SAR is also unaffected by changes in the radiological inventory limits of Building 772-F. Therefore, the consequences of a low energy event on the Service Floor remain unchanged. The analysis of a low energy event on the Service Floor assumes that one full drum of wastewater contaminated with tritium is involved. This is judged to be a bounding source term for a low-energy event on the Service Floor. The release for this event is the same as for the drum rupture event described previously.

Minor operational-related events that were assumed to occur in a glovebox or radiohood were evaluated in the initial issue of the F/H Lab SAR based on the following inputs. The maximum inventory of a glovebox was considered to be 200 Ci of Pu-238, 40 Ci of plutonium type 50 material (assumed to be Pu-239), and 2,450 Ci of H-3. Fission products or other mixed beta-gamma emitters, excluding Pu-241 and H-3, were assumed to be present in a glovebox (i.e., approximately 680 Ci, mostly Ru-106). It was assumed that a minor operational-related event could involve a small portion of this inventory or the entire inventory. The maximum inventory

of a glovebox was assumed to be involved in the minor operational-related event. The only mechanism assumed for transport of radioactive materials to the HEPA filters was evaporation. Therefore, an evaporation ARF of 1.0E-04 (Ref. 74) was applied to liquids, with the exception of tritium and ruthenium. An ARF of 1.0E+00 was assumed for tritium, since tritium in the form of water readily evaporates. An ARF of 1.0E-02 was assumed for ruthenium due to the high volatility of ruthenium under oxidizing conditions. In addition, an ARF of 1.0E-04 was conservatively assumed for the powders. It was further assumed that the offgas exhaust system remained operable and that all airborne material dispersed in the volume of the glovebox was discharged by way of the offgas exhaust system. Therefore, a filter penetration factor of 4.9E-05 was also applied.

The Ci released from the F-Canyon stack during these events are listed in Appendix 3D, Tables 3D-13 through 3D-18. Note that the values provided within these tables for minor operational-related events that occur in a glovebox or radiohood are based on the radiological inventories evaluated in the initial issue of the F/H Lab SAR.

Building 772-1F

The consequences of a sample tunnel spill bound the consequences of minor operational-related events in Building 772-1F. This is due in part to the larger radiological inventory of Building 772-F, which is considered in the event of a sample tunnel spill. In addition, the frequencies of minor operational-related events in Building 772-1F and the frequency of a sample tunnel spill place the events in the Anticipated frequency bin. Therefore, the consequences of minor operational-related events in 772-1F are not re-calculated for the new radiological inventory limits of Building 772-1F.

Minor operational-related events in Building 772-1F, as evaluated in the initial issue of the F/H Lab SAR, were assumed to involve the entire building inventory (852 Ci). The only mechanism assumed for transport of radioactive materials to the HEPA filters was evaporation. Therefore, an ARF of 1.0E-04 was applied to the liquid sample (Ref. 74) with the exception of H-3. An ARF of 1.0E+00 was assumed for H-3. An ARF of 1.0E-02 was assumed for ruthenium, and a filter penetration factor of 4.9E-03 was applied.

The Ci released from the Building 772-1F stack during these events are listed in Appendix 3E, Tables 3E-9 and 3E-10. Note that the values provided within these tables are based on the radiological inventories used in the initial issue of the F/H Lab SAR for the evaluation of minor operational-related events in Building 772-1F.

CONSEQUENCE ANALYSIS

Bounding radiological consequences of a minor operational-related event involving a sample tunnel spill were re-calculated using the new radiological inventory of Building 772-F. The resulting bounding consequences are calculated in S-CLC-F-00328 (Ref. 42) and are presented in Appendix 3H, Tables 3H-52 and 3H-53. The consequences for a drum rupture and a low energy event on the Service Floor are unaffected by changes in the Building 772-F and 772-1F radiological inventory limits and have therefore remained unchanged. The resulting

consequences for these events are calculated in S-CLC-F-00118 (Ref. 71) and are presented in Appendix 3D, Tables 3D-13 through 3D-20.

All additional minor operational-related events that were previously evaluated in the initial issue of the F/H Lab SAR have not been updated based on the new radiological inventory of Buildings 772-F and 772-1F. For that issue of the SAR, these consequences were calculated in S-CLC-F-00118 (Ref. 71) for Building 772-F and in S-CLC-F-00122 (Ref. 65) for Building 772-1F. The consequences are presented in Appendix 3D, Tables 3D-13 through 3D-20 for Building 772-F, and in Appendix 3E, Tables 3E-9 and 3E-10 for Building 772-1F.

Radiological consequences resulting from minor operational-related events in Buildings 772-F and 772-1F are summarized in Table 3.4-2.

COMPARISON TO GUIDELINES

As demonstrated in Table 3.4-4, the radiological consequences resulting from the bounding minor operational-related events are below the EGs.

SUMMARY OF SAFETY CLASS STRUCTURES, SYSTEMS, AND COMPONENTS AND TECHNICAL SAFETY REQUIREMENT CONTROLS

There are no Safety Class SSCs identified or credited as a result of the minor operational-related accident analysis. Consequences do not exceed the EGs even if no credit is taken for HEPA filters.

The only TSR controls used for analysis of these minor operational-related events are the maximum radiological inventory limits. These limits must be maintained to ensure that consequences related to minor operational-related events remain below the EGs.

3.4.2.5 Earthquake

SCENARIO DEVELOPMENT

Several studies have been made of the seismic activity of the area surrounding SRS. These studies conclude that the region surrounding the site is characterized by a relatively slow rate of crystal change (Ref. 75). The area is near an ancient (Appalachian) mountain system that is no longer undergoing active deformation or faulting. The crust underlying the southeast region is slowly tilting, perhaps rising isostatically but, in any case, is relatively stable. The region is accumulating stresses relatively slowly; more importantly, these stresses appear to be relieved by relatively frequent earthquakes of small intensity.

The frequencies of earthquakes affecting the F/H Lab are listed in Table 3.4-1. Earthquake frequencies for earthquakes within the design basis come from SRT-RAM-93-9007 (Ref. 76).

The frequency of an earthquake within the design basis and subsequent fire is assumed to be the frequency of an earthquake multiplied by a conditional probability of 0.1 (Ref. 77).

SOURCE TERM ANALYSIS

Building 772-F

Buildings 772-F and 772-4F (including the Building 772-4F stack) are structurally adequate to remain standing for up to a 0.20 acceleration due to gravity (g) Peak Ground Acceleration (PGA) earthquake (Ref. 78). In addition, the Building 772-4F air filtration system (HEPA filters, fans, and ducts) was judged to be adequate for up to a 0.20g PGA earthquake (Ref. 78). The main exhaust is assumed to remain operable and the exhaust fans are assumed to continue operating, thus providing a motive force to remove the material from the building. This is a reasonable assumption since the seismic analysis concluded that the fans were judged to be adequate for up to a 0.20g PGA earthquake. As previously discussed in Section 3.4.1.3, the room air is exhausted through three stages of HEPA filters with a combined filter penetration factor of 4.9E-07 (Ref. 61). However, for conservatism, this analysis assumed that the 772-4F HEPA filters are available as a passive boundary.

The analysis for the glovebox fire for Building 772-F is presented in Section 3.4.2.2. In the glovebox fire the Fire Suppression System in the facility is ineffective for reducing MAR involvment resulting in releasing the entire radiological inventory. The Fire Suppression System is not expected to survive a DBE.

The key assumptions used in the consequence analysis for the full or facility fire in Building 772-F are presented in Reference 95. The Ci released from Building 772-F during a full facility fire are listed in Appendix 3D, Tables 3D-3 and 3D-4.

The source term analysis for a DBE included in the initial issue of the F/H Lab SAR is provided in the following paragraphs.

The analysis assumed that in the event of an earthquake (0.05g less than PGA less than, or equal to, 0.2g), the buildings remain standing; however, the gloveboxes, radiohoods, and radiobenches topple over, spilling their contents within the laboratories. For the initial issue of the F/H Lab SAR, the following radionuclide inventory was assumed to be spilled: 200 Ci of Pu-238, 200 Ci of plutonium type 50 material, 1,800 Ci of Pu-241, and 2,600 Ci of mixed beta-gamma emitters modeled as Ru-106. Also, the 2,450 Ci of tritium stored in the laboratories was assumed to be released due to spillage or rupture of the containers, resulting in subsequent evaporation of tritium within the laboratories. The 8,120 Ci of tritium in drums on the Service Floor was assumed not to spill (Ref. 77).

An ARF of 2.0E-03 (Ref. 70) was applied to plutonium oxide powder. This bounding ARF is for Free-Fall of cohesionless powders with a fall height of 3 meters and air velocity normal to powder flow less than 1 meters per second. An ARF of 1.0E-02 (Ref. 74) was applied to ruthenium due to the high volatility of ruthenium under oxidizing conditions. An ARF of

1.0E-04 (Ref. 74) was applied to liquids, with the exception of tritium. An ARF of 1.0E+00 was assumed for tritium since tritium in the form of water readily evaporates.

The Ci released into the room air and to the atmosphere from the Building 772-4F stack during an earthquake were calculated in S-CLC-F-00123 (Ref. 77) and are listed in Appendix 3G, Tables 3G-1 through 3G-6. Note that the values provided within these tables are based on the radiological inventories used for the evaluation of an earthquake in the initial issue of the F/H Lab SAR.

The Ci released from Building 772-F during a full facility fire, which is bounded by a glovebox fire, are listed in Appendix 3D, Tables 3D-3 and 3D-4.

Building 772-1F

A seismic analysis performed on Building 772-1F, the facility exhaust stack, and the internal shielded cells concluded that Building 772-1F satisfied the seismic requirements for a 0.13g PGA earthquake (Performance Category 2) and the exhaust stack satisfies the seismic requirements for up to a 0.2g PGA earthquake (Ref. 78). The building is required to remain intact for the purpose of segmentation under design basis severe phenomenon events.

The analysis for the glovebox fire for Building 772-1F is presented in Section 3.4.2.2. In the glovebox fire the Fire Suppression System in the facility is ineffective for reducing MAR involvement resulting in releasing the entire radiological inventory. The Fire Suppression System is not expected to survive a DBE.

The key assumptions used in the consequence analysis for the full or facility fire in Building 772-1F are presented in Reference 95. For the subsequent fire scenario, no credit is taken for HEPA filtration. The Ci released from Building 772-1F during a full facility fire are listed in Appendix 3E, Tables 3E-3 and 3E-4.

The source term analysis for a DBE included in the initial issue of the F/H Lab SAR is provided in the following paragraphs.

The analysis conservatively assumed that the entire facility inventory is located outside the cells and is available for release. Therefore, the analysis assumed that, in the event of an earthquake (0.05g less than PGA less than, or equal to, 0.13g), the building remains standing; however, the gloveboxes, radiohoods, and radiobenches topple over, spilling their contents within the laboratories.

In a legacy calculation the facility inventory (852 Ci) was assumed to be spilled. An ARF of 2.0E-03 was applied to the entire inventory as described earlier for powders. For ruthenium, an ARF of 1.0E-02 was used as described earlier. An ARF of 1.0E+00 was assumed for tritium since tritium in the form of water readily evaporates. The entire amount of radionuclides made airborne was assumed to be released. No credit was taken for HEPA filtration; therefore, a filter penetration factor of 1.00E+00 was applied.

The Ci released into the room air and to the atmosphere from the Building at ground level during an earthquake are listed in Appendix 3G, Tables 3G-7 and 3G-8. Note that the values provided within these tables are based on the radiological inventories used for the evaluation of an earthquake in the initial issue of the F/H Lab SAR.

Based on the EM IG review documented in the CHA (Ref. 15) the consequences of a fire are considered bounded by the glovebox facility fire event. The earthquake is considered another initiator of a glovebox facility fire with the entire inventory released to the environment.

Building 772-4F

Since Building 772-4F and the air filtration equipment it houses are adequate to withstand up to a 0.20g PGA earthquake (Ref. 78), no source term is calculated for the DBE for this building.

In a beyond design basis analysis for an earthquake affecting Building 772-4F, the HEPA filters are assumed to collapse, and an ARF of 2.0E-03 is applied to the maximum inventory for the HEPA filters. An ARF of 2.0E-03 is a conservative value applied to spilled powders.

CONSEQUENCE ANALYSIS

Radiological consequences resulting from earthquakes involving Buildings 772-F and 772-1F were calculated for the initial issue of the F/H Lab SAR for the MOI and the individual at the OEP using the methods described in Section 3.4.1.4. For Building 772-F, the consequences were calculated in S-CLC-F-00123 (Ref. 77) and are presented in Appendix 3G, Tables 3G-1 through 3G-6. For Building 772-1F, the consequences were calculated in S-CLC-F-00122 (Ref. 65) and are presented in Appendix 3G, Tables 3G-7 and 3G-8.

The consequences of an earthquake are bounded by the consequences of an earthquake and full facility fire.

COMPARISON TO GUIDELINES

Radiological consequences resulting from facility fires in Building 772-F and 772-1F have been re-calculated using the new radiological inventory of Buildings 772-F and 772-1F. The radiological consequences for these fire scenarios are calculated for the MOI and the individual at the CW. The radiological consequences resulting from an earthquake induced facility fires are bounded under glovebox fires which are below the EGs.

SUMMARY OF SAFETY CLASS STRUCTURES, SYSTEMS, AND COMPONENTS AND TECHNICAL SAFETY REQUIREMENT CONTROLS

No Safety Class SSCs were credited in this earthquake analysis.

Safety Significant design features and TSR controls applicable to the fire analysis used to mitigate fire events (Ref. 15) are identified in Appendix 3B. These controls must be maintained to ensure that consequences associated with fire remain below the EGs.

3.4.2.6 Straight Winds and Tornadoes

SCENARIO DEVELOPMENT

High-velocity straight winds at SRS are usually associated with severe summer thunderstorms or hurricanes and have been known to reach 60 to 70 miles per hour (mph), with gusts up to 100-mph.

Occasional tornadoes are to be expected at SRS and may reach wind speeds of up to 260-mph. U.S. Weather Bureau records show that tornadoes have occurred in Georgia and South Carolina, but during the history of SRS, no production facility has suffered significant tornado damage (Ref. 23). In two instances, light damage occurred (e.g., window breakage). Other tornado funnels have been sighted in unpopulated areas of SRS, but investigations revealed no damage.

Straight wind and tornado frequencies at SRS are listed in Table 3.4-1 and are taken from UCRL-53526 (Ref. 79).

Building 772-F

As discussed in Chapter 2 of this DSA, Building 772-F was designed as a Class I, blast-resistant concrete structure in accordance with Specification 3580. Recent analysis, performed to evaluate the adequacy of the F/H Lab facilities, found the structural integrity of Building 772-F adequate for Performance Category 3 wind loads (i.e., 137-mph fastest-mile wind speed tornado) (Ref. 78). Because of the structural integrity of Building 772-F, no radiological releases are expected from Design Basis Straight Winds or Tornadoes.

Building 772-1F

Building 772-1F was designed as a Hazard Category 3 and Performance Category 2 facility and will withstand up to a 100-mph straight wind (Ref. 78). Previously the building was credited to withstand the events and mitigate release of all radiological materials. Although structural failure may not occur below a 100-mph wind, the consequence has been calculated for tornadoes (Ref. 80) and for straight winds in S-CLC-F-00122 since the building is not credited for the mitigation of the events. The building is required to remain intact for the purpose of segmentation under design basis severe phenomenon events. The Ci released to the atmosphere from the Building at ground level during a tornado or straight wind, are listed in Appendix 3G, Tables 3G-10 and 3G-9.

Building 772-4F

Building 772-4F was designed to meet the low-hazard requirements of DOE Order 6430.1A and UCRL-15910 (Ref. 81, 82). A recent analysis tested the structural integrity of Building 772-4F and determined that when subjected to low-hazard wind loads, Building 772-4F was found to be acceptable up to an 84-mph wind speed (Performance Category 2) (Ref. 78). Because of the structural integrity of Building 772-4F, no radiological releases are expected from Design Basis Straight Winds or Tornadoes.

3.4.3 BEYOND DESIGN BASIS ACCIDENTS

10 CFR Part 830 (Ref. 1) requires the evaluation of accidents beyond the design basis to provide a perspective of the residual risk associated with the operation of a facility. Such Beyond DBAs are not required to provide assurance of public health and safety. Beyond DBAs were grouped into three categories:

- Manmade operational-related events (i.e., explosion, fire, uncontrolled reaction, and minor operational-related events [i.e., leak, spill, overflow, pluggage, drum rupture, and drop/fall])
- Nuclear criticality events
- Natural phenomena events (i.e., straight wind, tornado, and earthquake)

In accordance with DOE-STD-3009-94 (Ref. 2), Beyond DBAs are not evaluated for external events.

Postulated operational-related Beyond DBAs for Buildings 772-F and 772-1F are the same operational-related accidents postulated in Section 3.4.2, with the exception that no credit is taken for any prevention or mitigation features.

A nuclear criticality at the F/H Lab has been shown to be an incredible event (Ref. 94). However, DOE-STD-3009-94 requires the evaluation of a nuclear criticality; therefore, Section 3.4.3.2 analyzes a nuclear criticality for the F/H Lab.

Postulated Beyond Design Basis Natural Phenomena are the same natural phenomena accidents postulated in Section 3.4.2, with the exception that no credit is taken for prevention or mitigation features.

3.4.3.1 Operational-Related Beyond Design Basis Accidents

SCENARIO DEVELOPMENT AND SOURCE TERM ANALYSIS

Building 772-F

The consequences for Building 772-F from operational-related Beyond DBAs were determined without taking credit for any prevention or mitigation features. The scenario development and source term development (inventory available for release and ARFs) are the same for each event, as described in Section 3.4.2. However, a leak path factor of 1.0 is used for all postulated operational-related events to represent complete release from the building. No credit was taken for the building, HEPA filters, or the sand filter (no longer in the airflow path) associated with the offgas exhaust system.

Building 772-1F

The consequences for Building 772-1F from operational-related Beyond DBAs were determined without taking credit for any prevention or mitigation features. The scenario development and source term development (inventory available for release and ARFs) are the same for each event, as described in Section 3.4.2. However, a leak path factor of 1.0 is used for all postulated operational-related events to represent complete release from the building. No credit was taken for the building or HEPA filters.

CONSEQUENCE ANALYSIS

Radiological consequences resulting from operational-related Beyond DBAs in Buildings 772-F and 772-1F are calculated for the MOI and the individual at the OEP using the methods described in Section 3.4.1.4 and are summarized in Table 3.4-3. Radiological consequences are calculated in S-CLC-F-00118, S-CLC-F-00122, S-CLC-F-00329, S-CLC-G-00305, and S-CLC-F-00595 (Ref. 71, 65, 68, 83, 63). For Building 772-F, the consequences are listed in Appendix 3H, Tables 3H-1 through 3H-16. For Building 772-1F, the consequences are listed in Appendix 3H, Tables 3H-17 through 3H-22.

COMPARISON TO GUIDELINES

The operational-related Beyond DBA consequences are below the EGs of DOE-STD-3009-94 (Ref. 2) as illustrated in Table 3.4-12.

The frequencies listed in Table 3.4-12 are the frequencies for the initiating events for the DBAs. These frequencies, as presented, have not taken into account the conditional probability of the loss of HEPA filtration and, therefore, are considered conservative for Beyond DBA analyses.

3.4.3.2 Nuclear Criticality, Beyond Design Basis Accident

SCENARIO DEVELOPMENT

A nuclear criticality at the F/H Lab has been shown to be BEU (i.e., an incredible event). However, DOE-STD-3009-94 (Ref. 2) requires the evaluation of accidents beyond the design basis to provide a perspective of the residual risk associated with operation of the facility.

B-25 Waste Container Staging Areas

A nuclear criticality at the B-25 waste container staging areas is judged to be BEU (i.e., an incredible event). Procedures for packaging waste to be placed in the B-25 waste containers require inventory control on all items added to the B-25 waste container. Accountable nuclear materials are not routine components of waste placed in a B-25 waste container and are very rarely added unless specifically authorized or intentionally added, based upon technical review and management approval. The inadvertent addition of fissile material to the B-25 waste container is prevented by procedural controls on waste disposal and labeling of fissile material. Manual 1S provides nuclear criticality safety limits (i.e., waste acceptance criteria) that apply to fissile material in a B-25 waste container (Ref. 67). In addition, B-25 waste containers are assayed to ensure compliance with waste acceptance criteria and authorization basis limits. In view of the controls which tightly restrict the removal of fissile material from F/H Lab by means of the B-25 waste containers, a nuclear criticality frequency no greater than that estimated for all the laboratories in both Buildings 772-F and 772-1F was judged reasonable. That frequency is BEU.

Furthermore, an infinite array of B-25 waste containers each with an amount of fissile material three times the waste acceptance criteria for a B-25 waste container has been found to be subcritical (Ref. 84). This provides further justification for the assertion that a nuclear criticality involving the B-25 waste container staging areas is an incredible event.

SOURCE TERM ANALYSIS

Building 772-F

Radiological consequences from a nuclear criticality event at the F/H Lab are calculated in S-CLC-F-00131 (Ref. 85). Personnel exposure from a nuclear criticality event is the sum of the prompt gamma dose, the prompt neutron dose, and the plume immersion dose. For the plume immersion dose calculation, the radionuclides listed in Table 1 of Regulatory Guide 3.35 (Ref. 11) were assumed to be released, in addition to plutonium. Eight hundred grams of plutonium are assumed to be involved in the criticality, and 0.05% of the plutonium involved is assumed to be made airborne in the form of an aerosol (Ref. 11) due to evaporation of the mixture or solution. The nuclear criticality is assumed to occur in a glovebox and result in 1.0E+19 fissions. It is assumed that 0.05% of the plutonium, all of the noble gas mixed beta-gamma emitters, and 25% of the iodine radionuclides produced by the nuclear criticality are

released to the glovebox atmosphere (Ref. 11). Therefore, ARFs of 5.0E-04, 1.0E+00, and 2.5E-01 are assumed. No credit is taken for shielding of prompt gamma and prompt neutron radiation.

The radionuclides are assumed to be released from a stack by way of the offgas exhaust system, which uses two stages of leak-testable HEPA filters and two stages of HEPA filters located in Building 772-4F. Previously, the offgas was exhausted through the 221-F Warm Canyon exhaust system, which was filtered by the F-Area sand filter. As described in Section 3.4.1.4, the filter penetration factor of two stages of leak-testable HEPA filters and the sand filters with one stage assumed to be bypassed is 4.9E-05, which is the same for three leak-testable filters with one stage assumed to be bypassed. A filter penetration factor of 1.0E+00 is assumed for all gases (i.e., krypton, xenon, and iodine).

A nuclear criticality that took no credit for the HEPA filter or the sand filter is also modeled for comparison (i.e., a filter penetration factor of 1.0E+00 is assumed). A groundlevel release is assumed for this nuclear criticality.

Building 772-1F

Building 772-1F gloveboxes are filtered by three stages of testable HEPA filters; therefore, the consequences of a filtered nuclear criticality in Building 772-1F are bounded by the consequence calculations for a filtered nuclear criticality in Building 772-F.

The consequences of an unfiltered nuclear criticality in Building 772-1F are approximately the same as the consequences of an unfiltered nuclear criticality in Building 772-F. The only difference in consequences would be due to the distances of the two release points to the site boundary. The difference of the two distances would be negligible for these two neighboring facilities in F Area. No additional nuclear criticality calculations were performed for Building 772-1F.

B-25 Waste Container Staging Areas

Beyond DBE events were analyzed and reported in the previous revision of the DSA Chapter 3 (Rev. 4). However, because the B-25 Staging Area is a Facility Hazard Category 3 simple storage area with low accident consequences, beyond DBEs are not included in this current revision (Rev. 5) of Chapter 3 Consequence Analysis

Radiological consequences resulting from a nuclear criticality in Building 772-F are calculated for the MOI and the individual at the OEP using the methods described in S-CLC-F-00131 (Ref. 85) for both a filtered and an unfiltered release. The Beyond Design Basis Nuclear Criticality consequences are calculated in S-CLC-F-00131 and are listed in Appendix 3H, Tables 3H-23 through 3H-26.

COMPARISON TO GUIDELINES

As stated previously, a nuclear criticality event at the F/H Lab has been shown to be BEU (i.e., incredible). There are no EGs in DOE-STD-3009-94 (Ref. 2) for incredible events.

3.4.3.3 Earthquake, Beyond Design Basis Accident

SCENARIO DEVELOPMENT AND SOURCE TERM ANALYSIS

The frequencies of Beyond DBEs are listed in Table 3.4-1. Beyond DBE frequencies come from S-CLC-F-00123 (Ref. 77). The frequency of a Beyond DBE (i.e., greater than 0.2g PGA) affecting Buildings 772-F and 772-4F is 2E-04/year. The frequency of a Beyond DBE (i.e., greater than 0.13g PGA) affecting Building 772-1F is 1E-03/year.

The frequency of a Beyond DBE and subsequent fire is assumed to be the frequency of the earthquake multiplied by a conditional probability of 0.2 (Ref. 77).

Building 772-F

The consequences of a beyond DBE are bounded by the consequences of a tornado, which is evaluated in 3.4.3.4. Therefore, the consequences of a beyond DBE are not re-calculated for the new radiological inventory of Building 772-F. The scenario development and source term analysis included in the initial issue of the F/H Lab SAR is provided in the following paragraphs.

Building 772-F is capable of withstanding up to a 0.20g PGA earthquake. Therefore, the analysis assumed that a Beyond DBE with a greater than 0.20g PGA destroys Building 772-F, releasing the contents of the gloveboxes, radiohoods, and radiobenches to the atmosphere. Furthermore, all of the drums containing a moderator contaminated with 2,450 Ci of tritium, as well as the 8,120 Ci of tritium stored in drums of wastewater, were assumed to be spilled and released on the Service Floor. As described in the DBE, ARFs of 2.0E-03, 1.0E-04, 1.0E-02, and 1.0E+00 were assumed for the Beyond DBE as necessary. The release was assumed to occur at ground level and was not filtered. Therefore, a filter penetration factor of 1.0E+00 is appropriate.

The Ci released into the room air and to the atmosphere during a Beyond DBE are listed in Appendix 3H, Tables 3H-27 through 3H-32. Note that the values provided within these tables are based on the radiological inventories used for the evaluation of a beyond DBE in the initial issue of the F/H Lab SAR.

High-Activity Drain Tanks

The inoperative high-activity drain tanks (C & D) and the Building 772-4F air filtration system are qualified to withstand up to a 0.2g PGA earthquake according to SRT-TML-93-9025 and WSRC-TR-95-0080 (Ref. 66, 78), respectively. The supports for Tank F have been evaluated to

withstand a DB earthquake without impacting credited structural elements of building 772-F (Ref. 92, 93). An evaporative release from the high-activity drain tanks, concurrent with the loss of HEPA filtration following a Beyond DBE, has been considered. The HEPA filtration is assumed to fail; however, the blowers in the ventilation system are assumed to continue operating to provide a motive force for an airborne release. An ARF of 1.0E-04 is assumed for the evaporative release of plutonium particles from the tanks. A filter penetration factor of 1.0 is assumed due to the loss of HEPA filtration following a Beyond DBE. The release from the high-activity drain tanks following a Beyond DBE, however, is bounded by the unfiltered release of plutonium particles from gloveboxes in Building 772-F. An ARF of 2.0E-03 is used for the airborne release of plutonium particles, since the gloveboxes are assumed to be knocked over and broken open during a Beyond DBE. Since the radionuclide inventory in the high-activity drain tanks is considered part of the Building 772-F inventory, a conservative analysis of a Beyond DBE for Building 772-F considers the entire radionuclide inventory to be in gloveboxes inside Building 772-F and no radionuclide inventory to be in the high-activity drain tanks.

Other conceivable, although BEU, scenarios for the Beyond DBE involving the high-activity drain tanks would include a subsequent fire in the high-activity drain tanks or an airborne release of plutonium particles from a dried-out high-activity drain tank. Both of these alternate scenarios involve conditional probabilities that drive down the frequency of the beyond design basis event. The frequency of the Beyond DBE and fire includes the conditional probabilities of a combustible liquid in the tank and an ignition source in the tank. The frequency of the Beyond DBE and a dried-out high-activity drain tank includes the conditional probabilities that the tank begins to dry out and no attempt is made to refill the high-activity drain tank with water. Both of these alternative scenarios, however, are bounded by analyses of the Beyond DBE and fire for Building 772-F and the Beyond DBE for Building 772-F.

Building 772-1F

The consequences of a beyond DBE are not considered since it is bounded by the DBE.

B-25 Waste Container Staging Areas

Beyond DBE events were analyzed and reported in revision 4 of the DSA, however, because the B-25 Staging Area is a Facility Hazard Category 3 simple storage area with low accident consequences, beyond DBEs are not included in the current revision (Rev. 5) of Chapter 3.

Building 772-4F

As stated previously, Building 772-4F is capable of withstanding up to a 0.20g PGA earthquake. Therefore, this analysis assumes that a Beyond DBE with a greater than 0.20g PGA destroys Building 772-4F, releasing the contents of the building into the atmosphere. An ARF of 2.0E-03 is applied to the particles on the HEPA filter made airborne by an earthquake. The release is assumed to occur at ground level and is not filtered. Therefore, a filter penetration factor of 1.0E+00 is appropriate.

The Ci released to the atmosphere at ground level during a Beyond DBE are listed in Appendix 3H, Tables 3H-37 and 3H-38.

CONSEQUENCE ANALYSIS

Radiological consequences resulting from Beyond DBEs involving Buildings 772-F and 772-1F are bounded by the radiological consequences of a tornado, which is evaluated in 3.4.3.4. Therefore, the consequences of Beyond DBEs involving Buildings 772-F and 772-1F are not re-calculated for the new radiological inventory limits.

Radiological consequences resulting from Beyond DBEs involving Buildings 772-F, 772-1F, 772-4F, and the B-25 waste container staging areas were calculated for the initial issue of the F/H Lab SAR for the MOI and the individual at the OEP using the methods described in Section 3.4.1.4. These consequences are summarized in Table 3.4-12. The consequences are calculated in S-CLC-F-00123 (Ref. 77) for Buildings 772-F and 772-4F and S-CLC-F-00122 (Ref. 65) for Building 772-1F and are listed in Appendix 3H, Tables 3H-27 through 3H-38. The consequences for the B-25 waste container staging areas Beyond DBA, previously in Rev. 4 of the DSA, are not included in this revision (Rev. 5) of Chapter 3.

Because the 772-1F is a Facility Hazard Category 3 with low accident consequences, beyond DBEs are not included in the current revision of Chapter 3.

COMPARISON TO GUIDELINES

The Beyond DBE consequences are below the EGs as illustrated in Table 3.4-13.

3.4.3.4 Straight Winds and Tornadoes, Beyond Design Basis Accident

SCENARIO DEVELOPMENT AND SOURCE TERM ANALYSIS

The frequencies of Beyond Design Basis Straight Winds and Tornadoes are listed in Table 3.4-1. Straight wind and tornado frequencies at SRS are taken from UCRL-53526 (Ref. 79).

Building 772-F

As stated previously, Building 772-F is designed for and capable of withstanding Performance Category 3 wind loads (i.e., 137-mph fastest-mile wind speed tornado). As a result, consequences associated with Design Basis Straight Wind or Tornado loads were not calculated. Therefore, it is assumed for Building 772-F that a tornado with wind speeds greater than 137-mph destroys the building, releasing the contents of the gloveboxes, radiohoods, and radiobenches to the atmosphere.

The consequences associated with a Beyond Design Basis F2 Tornado (113 to 157-mph fastest-mile wind speed) have been re-calculated based on the new radiological inventory of Building

772-F. The source term for the design basis tornado is defined assuming that the entire inventory is released by the tornado and dispersed.

The Ci released to the atmosphere from this Beyond Design Basis Tornado are listed in Appendix 3H, Tables 3H-39 through 3H-41.

For the initial issue of the F/H Lab SAR, a second beyond design basis calculation was performed for Building 772-F, which did not take credit for the ability of the building to withstand a lesser tornado. In this calculation, a tornado with fastest-mile wind speeds greater than 84-mph is assumed to damage or destroy the building, releasing a fraction of the contents of the gloveboxes, radiohoods, and radiobenches. The consequences for this tornado are bounded by the consequences of an F2 Tornado and were therefore not re-calculated for the new radiological inventory of Building 772-F.

As determined in the initial SAR issue, only 10% of the contents are assumed to be released in a tornado with wind speeds greater than 84-mph. This is based on a judgment that much of the radioactive material in the building could not be made airborne and remain airborne and respirable for very long after the tornado passed due to the lesser severity of this tornado and due to the form and packaging of the radioactive material.

The Ci released to the atmosphere from this Beyond Design Basis Tornado are listed in Appendix 3H, Tables 3H-42 through 3H-44. Note that the values provided within these tables are based on the radiological inventories used for the initial issue of the F/H Lab SAR.

High-Activity Drain Tanks

The high-activity drain tanks (C&D) are located underground in reinforced-concrete cells. Due to the physical location of the tanks, straight winds and tornadoes will have no effect. Therefore, the impact on the high-activity drain tanks of straight winds and tornadoes is not analyzed further.

The high-activity drain tank (F) is located below grade in building 772-F. Due to the physical location of the tank, straight winds and tornadoes will have no effect. Therefore, the impact on the high-activity drain tank of straight winds and tornadoes is not analyzed further.

Building 772-1F

As stated earlier, Building 772-1F is designed for and capable of withstanding wind loads up to a 100-mph straight wind or tornado but since the building is no longer credited for mitigation the DBT bounds the event.

B-25 Waste Container Staging Areas

Beyond DBE events were analyzed and reported in the previous revision of the DSA, Chapter 3 (Rev. 4). However, because the B-25 Staging Area is a Facility Hazard Category 3 simple

storage area with low accident consequences, beyond DBEs are not included in the current revision (Rev. 5) of Chapter 3.

Building 772-4F

Building 772-4F is designed for and capable of withstanding Hazard Category 3 wind loads (i.e., 84-mph straight wind). Therefore, it is assumed for Building 772-4F that a straight wind greater than 84-mph or a tornado destroys the building, releasing the contents of the building to the atmosphere.

The Ci released into the atmosphere from a Beyond Design Basis Straight Wind or Tornado are listed in Appendix 3H, Tables 3H-49 and 3H-50, respectively.

CONSEQUENCE ANALYSIS

Radiological consequences resulting from a Beyond Design Basis F2 Tornado involving Buildings 772-F has been re-calculated based on the new radiological inventory of Buildings 772-F. The consequences are calculated in S-CLC-F-00327 for Building 772-F and are listed in Table 3.4-3 (Ref. 86, 80).

Radiological consequences resulting from Beyond Design Basis Straight Winds and Tornadoes involving Building 772-4F are calculated for the MOI using the methods described in Section 3.4.1.4 and are summarized in Table 3.4-3. The consequences are calculated in S-CLC-F-00132 for Building 772-4F and are listed in Appendix 3H, Tables 3H-39 through 3H-50 (Ref. 87). The consequences for the B-25 waste container staging areas Beyond DBA, previously in Rev. 4 of the DSA, are not included in this revision (Rev. 5) of Chapter 3.

COMPARISON TO GUIDELINES

The Beyond Design Basis Straight Wind consequences are below the EGs as illustrated in Table 3.4-13. The Beyond Design Basis Tornado consequences are also below the EGs as illustrated in Table 3.4-13.

3.4.4 CHEMICAL RELEASES

A potential release of the chemical inventory was evaluated to establish inventory limits for chemicals used in Buildings 772-F and 772-1F. Releases of the chemical inventory contained within Buildings 772-F and 772-1F were evaluated similarly to the Beyond DBAs in that no credit is taken for any prevention or mitigation features when calculating chemical consequences. Building 772-4F and the B-25 waste container staging areas do not have a significant chemical inventory and are therefore not considered in establishing inventory limits for chemicals.

The chemical inventory limits are calculated in J-CLC-F-00322 and are provided in Table 3.3-7 for the combined inventory of Buildings 772-F and 772-1F (Ref. 43). The Release Fractions (RFs) assumed for each chemical in establishing the inventory limits were based on DOE-STD-1027-92 and are provided as follows (Ref. 4):

- 1.0 for gases
- 0.5 for highly volatile/combustible chemicals
- 0.01 for semi-volatile chemicals
- 0.001 for solids, powders, and liquids

Atmospheric dispersion factors were obtained using the MACCS computer code based on the following assumptions:

- 95% meteorology is used without regard to sector
- A 15-minute release is assumed
- A ground level release is assumed

The resulting inventory limits represent the maximum amount of each chemical that can be in the combined inventory of Buildings 772-F and 772-1F and be completely released before ERPG-2 limits are exceeded for the 100-m receptor. A 100-m receptor is assumed to be a conservative location for workers in that an accident involving the entire chemical inventory of Buildings 772-F and 772-1F would result in immediate worker evacuations. A distance of 640 meters is the approximate distance to the rally point for evacuated workers.

The evaluation of chemical releases and the resulting chemical inventory limits are provided to satisfy functional classification criteria given in Procedure 2.25 of Manual E7 for chemical hazards (Ref. 18). This criterion requires that consequences resulting from chemical accidents be evaluated against the ERPG-2 or equivalent thresholds.

3.5 REFERENCES

1. Nuclear Safety Management. Title 10 Energy, Code of Federal Regulations, Part 830, U.S. Department of Energy, Washington, DC, January 2006.

2. Preparation Guide for U.S. Department of Energy Nonreactor Nuclear Facility Safety Analysis Reports. DOE-STD-3009-94, CN3, U.S. Department of Energy, Washington, DC, March 2006.

3. Facility Safety Document Manual. Manual 11Q, Appendix A, Rev. 0, Savannah River Nuclear Solutions, Aiken, SC, October 2005.

4. Hazard Categorization and Accident Analysis Techniques for Compliance with DOE Order 5480.23, Nuclear Safety Analysis Reports. DOE-STD-1027-92, U.S. Department of Energy, Washington, DC, September 1997.

5. Deleted.

6. Facility Safety. DOE Order 420.1B, U.S. Department of Energy, Washington, DC, December 2005.

7. Guide for the Mitigation of Natural Phenomena Hazards for DOE Nuclear Facilities and Nonnuclear Facilities, DOE Guide 420.1-2, U.S. Department of Energy, Washington, DC, March 2000.

8. Natural Phenomena Hazards Design and Evaluation Criteria for Department of Energy Facilities. DOE-STD-1020-2002, U.S. Department of Energy, Washington, DC, January 2002.

9. Natural Phenomena Hazards Performance Categorization Criteria for Structures, Systems, and Components. DOE-STD-1021-92, U.S. Department of Energy, Washington, DC, December 1992.

10. American National Standard for Nuclear Criticality Safety in Operations with Fissionable Materials Outside Reactors. ANSI/ANS-8.1, American Nuclear Society, La Grange Park, IL, October 1983.

11. Assumptions Used for Evaluating the Potential Radiological Consequences of Accidental Nuclear Criticality in a Plutonium Processing and Fuel Fabrication Plant. Regulatory Guide 3.35, Rev. 1, U.S. Nuclear Regulatory Commission, Washington, DC, July 1979.

12. Employee Safety Manual. Manual 8Q, Savannah River Nuclear Solutions, Savannah River Site, Aiken, SC, May 2006.

13. Consolidated Hazard Analysis Process Programs & Methods. SCD-11, Rev. 4, Savannah River Nuclear Solutions, Aiken, SC, June 2005.

14. Safety Documentation Integrated Work Process. SCD-12, Rev. 0, Savannah River Nuclear Solutions, Aiken, SC, December 2005.

15. Oakley, R. Consolidated Hazards Analysis for Operations in Building 772-F, 772-1F, 772-4F and B-25 Pad. WSRC-TR-2006-00099, Rev 5, Savannah River Nuclear Solutions, Aiken, SC, June 2010.

16. Gerrard, P.B. Preliminary Hazards Analysis, Central Laboratory Facility. WSRC-TR-94-0261, Westinghouse Savannah River Company, Aiken, SC, September 1994.

17. Coutts, D.A., Allison, D.K., and Robertson, S.J. Fire Risk Analysis for the Central Analytical Laboratory Buildings 772-F, 772-1F, and 772-4F. WSRC-TR-95-0221, Westinghouse Savannah River Company, Aiken, SC, May 1995.

18. E7 Conduct of Engineering and Technical Support. Manual E7, Procedure 2.25, Savannah River Nuclear Solutions, Aiken, SC.

19. Functional Classification Methodology Manual. WSRC-TM-93-9, Rev. 5, Westinghouse Savannah River Company, Aiken, SC, November 2004.

20. Durant, W.S. and Pritchard, P.R. Systems Analysis - 200 Area Savannah River Plant Production Control Facilities Building 772-F. DPSTSY-200-15, E.I. du Pont de Nemours and Company, Savannah River Laboratory, Aiken, SC, January 1986.

21. Safety Analysis Report - 200 Area, Production Control Facilities, Building 772-F (With Addendum of October 9, 1992). DPSTSA-200-10, SUP-12, Westinghouse Savannah River Company, Aiken, SC, March 1992.
Superceded by the new SAR/TSR

22. McDuffee, W.T., et al. Safety Analysis - 200 Area, Savannah River Plant, New Production Control Facilities Building 772-1F. DPSTSA-200-10, SUP-14, E.I. du Pont de Nemours and Company, Savannah River Laboratory, Aiken, SC, April 1987.
Superceded by the new SAR/TSR

23. Gerrard, P.B. Addendum to the SAR for the New Production Control Facilities Building 772-1F, Safety Analysis - 200 Area. DPSTSA-200-10, SUP-14, DOE Review Draft, Westinghouse Savannah River Company, Aiken, SC, November 1992.
Superceded by the new SAR/TSR

24. Production Control Facilities Buildings 772-F and 772-1F, Justification for Continued Operation. DPSTSA-200-10, SUP-12, Addendum 1, DOE Review Draft, Westinghouse Savannah River Company, Aiken, SC, May 1993.
Superceded by the new SAR/TSR

25. Operational Safety Requirements - Buildings 772-F and 772-1F. WSRC-RP-92-364 (Draft), Westinghouse Savannah River Company, Aiken, SC, June 1992.
Superceded by the new SAR/TSR

26. Operational Safety Requirements for Laboratories 772-F and 772-1F in 200-F Area. DPW-87-105, E.I. du Pont de Nemours and Company, Savannah River Laboratory, Aiken, SC, June 1987.
Superceded by the new SAR/TSR

27. Analysis and Justification Report, Production Control Facilities, Buildings 772-F and 772-1F. 772-F/1F AJR (Draft), Westinghouse Savannah River Company, Aiken, SC, March 1992.
Superceded by the new SAR/TSR

28. Hazards Assessment Document, DOE-STD-1027-92 Review, Buildings 772-F and 772-4F of the Central Laboratories Facilities. WSRC-TR-94-0114, Westinghouse Savannah River Company, Savannah River Technology Center, Aiken, SC, June 1994.

29. Hazards Assessment Document DOE-STD-1027-92 Review, New Production Control Facility Building 772-1F. WSRC-TR-94-0115, Westinghouse Savannah River Company, Savannah River Technology Center, Aiken, SC, June 1994.

30. Hazards Assessment Document, Central Laboratory Facility, B-25 Waste Container Staging Areas. S-HAD-F-00004, Rev. 0, Westinghouse Savannah River Company, Aiken, SC, November 1995.

31. Reynolds, L.W. Process Hazards Review Report for Electrical Service Systems 772-1F. No. 200-F-100, Westinghouse Savannah River Company, Aiken, SC, August 1991.

32. Pittman, J.L. Process Hazards Review Report for Exhaust and Supply 772-F. No. 200-F-020, Westinghouse Savannah River Company, Aiken, SC, March 1989.

33. Hodgens, H.F. Process Hazards Review Report for Fissile Material Handling 772-F/772-1F. No. 200-F-092, Westinghouse Savannah River Company, Aiken, SC, October 1990.

34. Holland, M.K. Process Hazards Review Report for Instrumental and Chemical Analysis Systems, Central Laboratory Facility 772-F/1F. WSRC-PH-90-59, Westinghouse Savannah River Company, Aiken, SC, November 1992.

35. Holm, R.D. Preoperational Process Hazards Review Report, Building 772-4F Airborne Radiation Removal Facility. PHR-LAB-F-0024, Westinghouse Savannah River Company, Aiken, SC, March 1993.

36. Analytical Laboratories CLAB Multi-Group Procedures. Manual L2-1, Savannah River Nuclear Solutions, Aiken, SC.

37. Analytical Laboratories Standard Practices. Manual L2, Savannah River Nuclear Solutions, Aiken, SC.

38. Support Systems Procedures for F-Area Analytical Laboratories. Manual L4.2, Savannah River Nuclear Solutions, Aiken, SC.

39. Durant, W.S. Separations Facilities Fault Tree Data Bank (SEPR), 1992 Status Report. WSRC-TR-93-309, Westinghouse Savannah River Company, Aiken, SC, May 1993.

40. Allison, D.K. and Cope, C.D. Central Laboratory Fire Analysis. S-CLC-F-00164, Rev. 0, Westinghouse Savannah River Company, Aiken, SC, May 1995.

41. Hammond, D.M. Dose Calculations for the CLAB B-25 Waste Container Staging Areas. S-CLC-F-00178, Rev. 0, Westinghouse Savannah River Company, Aiken, SC, December 1995.

42. Hope, E.P., Central Laboratory Release Analysis. S-CLC-F-00328, Rev. 1, Savannah River Nuclear Solutions, Aiken, SC, September 2009.

43. Marx, D.R. Minimum Inventory Necessary for CLAB Chemicals to Exceed ERPG-2 Thresholds. S-CLC-F-00322, Rev. 1, Westinghouse Savannah River Company, Aiken, SC, March 30, 2000.

44. Code of Federal Regulations. Title 40, Part 302.4, "Designation of Hazardous Substances," Office of the Federal Register, July 1994.

45. Code of Federal Regulations. Title 40, Part 355, "Emergency Planning and Notification," Office of the Federal Register, July 1994.

46. Code of Federal Regulations. Title 29, Part 1910.119, "Process Safety Management of Highly Hazardous Chemical," Office of the Federal Register, July 1994.

47. NIOSH Pocket Guide to Chemical Hazards. U.S. Department of Health and Human Services, September 2005.

48. Sharma, M. K., Transmittal of Preliminary Hazard Analysis (PHA) and Functional Classification (FC) for F/H Area Lab Process Return Loading Station for Facility Concurrence (U), WSMS-SAE-M-03-0154, September 2003.

49. Deleted

50. Deleted

51. Morton, G. R. F/H Area Laboratory Liquid Transfer Accident Analysis Assessment for Non-Diffusion of Hydrogen case (U), WSMS-SAE-M-03-0127, Rev. 1, September 2003.

52. Simpkins, A.A. AXAIR89Q User's Manual. WSRC-RP-94-313, Westinghouse Savannah River Company, Aiken, SC, April 1994.

53. Chanin, D.I., Sprung, J.L., Ritchie, L.T., and Jow, H-N. MELCOR Accident Consequence Code System (MACCS), Volume 1. User's Guide. NUREG/CR-4691 (SAND86-1562), Sandia National Laboratory, Albuquerque, NM, February 1990.

54. Jow, H-N, Sprung, J.L., Rollistin, J.A., Ritchie, L.T., and Chanin, D.I. MELCOR Accident Consequence Code System (MACCS), Volume 2. Model Description. NUREG/CR-4691 (SAND86-1562), Sandia National Laboratory, Albuquerque, NM, February 1990.

55. Rollistin, J.A., Chanin, D.I., and Jow, H-N. MELCOR Accident Consequence Code System (MACCS), Volume 3. Programmer's Reference Manual. NUREG/CR-4691 (SAND86-1562), Sandia National Laboratory, Albuquerque, NM, February 1990.

56. Chanin, D.I., Rollistin, J.A., Foster, J., and Miller, L. MACCS Version 1.5.11.1: A Maintenance Release of the Code. NUREG/CR-6059 (SAND92-2146), Sandia National Laboratory, Albuquerque, NM, August 1993.

57. Methodology Manual for Nuclear Process Safety Analysis. WSRC-TM-90-13, Rev. 2, Westinghouse Savannah River Company, Aiken, SC, May 1992.

58. Huang, J.C. and Marter, W.L. Recommended Breathing Rates for SAR Accident Dose Calculations. Internal Report DPST-83-930, E.I. du Pont de Nemours and Company, Savannah River Laboratory, Aiken, SC, December 1983.

59. Internal Dose Conversion Factors for Calculation of Dose to the Public. DOE/EH-0071, U.S. Department of Energy, Washington, DC, July 1988.

60. Ziegler, J.A. Central Laboratory Facility Accident Frequency Calculation. S-CLC-F-00109, Rev. 0, Westinghouse Savannah River Company, Aiken, SC, August 1994.

61. Lee, M.W. and Stoddard, D.H. Statistical Analysis of HEPA Filtration Systems. Internal Report DPST-79-359, E.I. du Pont de Nemours and Company, Savannah River Laboratory, Aiken, SC, May 1979.

62. Flammability Analysis for the HAD/LAD Tanks and Gloves Boxes of the F/H Labs (U), S-CLC-F-00589, Rev. 1 Savannah River Nuclear Solutions, Aiken, SC, September 2009.

63. Deleted

64. Evaluation of Drum Breach Potential for Different Types of Volatile Organic Compounds (VOCs) in TRU Drums at the Solid Waste Management Facility (U). S-CLC-F-00533, Rev 5, Washington Safety Management Solutions, Aiken, SC, March 2005.

65. Robson, P.A. Building 772-1F Dose Calculations. S-CLC-F-00122, Rev. 0, Westinghouse Savannah River Company, Aiken, SC, September 1995.

66. Geeting, M.W. and Henry, T.P. Safety Analysis of Building 772-F High Level Transfer (HLT) Tanks. SRT-TML-93-9025, Rev. 0, Westinghouse Savannah River Company, Aiken, SC, December 1993.

67. Savannah River Site Waste Acceptance Criteria Manual. Manual 1S, Procedure WAC 3.10, Savannah River Nuclear Solutions, Aiken, SC, July 1996.

68. Hang, Pauline. Radiological Consequence Analysis for Central Laboratory Facility Fires and Spill Accidents. S-CLC-F-00329, Rev. 0, Westinghouse Savannah River Company, Aiken, SC, April 17, 2000.

69. Hope, E.P. Radiological Consequences of Central Laboratory Facility Fire Scenarios. S-CLC-F-00195, Rev. 0, Westinghouse Savannah River Company, Aiken, SC, May 1996.

70. Airborne Release Fractions/Rates and Respirable Fractions for Nonreactor Nuclear Facilities. DOE-HDBK-3010-94, Vol. 1, U.S. Department of Energy, Washington, DC, October 1994.

71. Robson, P.A. Building 772-F Consequence Calculation for Process-Related Events. S-CLC-F-00118, Rev. 0, Westinghouse Savannah River Company, Aiken, SC, September 1995.

72. Savannah River Site Generic Data Base Development. WSRC-TR-93-262, Westinghouse Savannah River Company, Aiken, SC, June 1993.

73. East, J.M. Dose Analysis for Reactor PHAs. S-CLC-K-00126, Rev. 0, Westinghouse Savannah River Company, Aiken, SC, August 1995.

74. Elder, J.C., et al. A Guide to Radiological Accident Considerations for Siting and Design of DOE Nonreactor Nuclear Facilities. LA-10294-MS, UC-41, Los Alamos National Laboratory, Los Alamos, NM, January 1986.

75. Update of Seismic Design Criteria for the Savannah River Plant - Geotechnical. DPE-3696, Vol. 2, URS/John Blume and Associates, Engineers, San Francisco, CA, September 1982.

76. Sheikh, N.A. Development of Probabilistic Seismic Hazard Curve for DWPF at SRS. SRT-RAM-93-9007, Westinghouse Savannah River Company, Aiken, SC, May 1993.

77. Robson, P.A. Building 772-F Consequence Calculation for Earthquake Events. S-CLC-F-00123, Rev. 0, Westinghouse Savannah River Company, Aiken, SC, August 1995.

78. Baldwin, G.R., Faires, W.E., and Griffin, M.J. Natural Phenomena Hazards Qualification of Buildings 772-F, 772-1F, and 772-4F Structures, Systems, and Components (SSCs). WSRC-TR-95-00080, Rev. 0, Westinghouse Savannah River Company, Aiken, SC, April 1995.

79. Couts, D.W. and Murray, R.C. Natural Phenomena Hazards Modeling Project: Extreme Wind/Tornado Hazard Models for Department of Energy Sites. UCRL-53526, Rev. 1, Lawrence Livermore National Laboratory, Livermore, CA, August 1985.

80. Knight, J. Consequences of Central Laboratory Tornado Accident in building 772-1F. S-CLC-F-00330, Rev. 1, Washington Savannah River Company, Aiken, SC, July 2006.

81. General Design Criteria. DOE Order 6430.1A, U.S. Department of Energy, Washington, DC, April 1989.

82. Kennedy, R.P., et al. Design and Evaluation Guidelines for the Department of Energy Facilities Subjected to Natural Phenomena Hazards. UCRL-15910, Lawrence Livermore National Laboratory, Livermore, CA, June 1990.

83. Polizzi, M., et al. Building 772-F Consequence Analysis for ground Level and Stack Releases for Process Related Events (U), S-CLC-G-00305, Rev. 0, December 2003.

84. Schlesser, J.A. Nuclear Criticality Safety Analysis 87-15 Burial of Enriched Uranium in B-25 Boxes. DPSPU-87-272-145, E. I. du Pont de Nemours and Company, Savannah River Site, Aiken, SC, October 1987.

85. Robson, P.A. CLAB Criticality Consequence Calculation. S-CLC-F-00131, Rev. 0, Westinghouse Savannah River Company, Aiken, SC, August 1995.

86. Hope, E.P. Radiological Consequence Analysis of Central Laboratory Tornado Accident. S-CLC-F-00327, Rev. 0, Westinghouse Savannah River Company, Aiken, SC, April 14, 2000.

87. Robson, P.A. Building 772-F and 772-4F Consequence Calculation for Tornado and High Wind Events. S-CLC-F-00132, Rev. 0, Westinghouse Savannah River Company, Aiken, SC, August 1995.

88. Triay, I.R., Interim Guidance on Safety Integration into Early Phases of Nuclear Facility Design, Department of Energy, July 2006

89. Thoman, D.C, et. al. F/H Laboratory Radiological Consequence Analysis. S-CLC-F-00605, Rev. 0, Washington Safety Management Solutions, Aiken, SC, May 2007.

90. Allison, D.K. et. al. Accident Analysis for CLAB B-25 Waste Containers. S-CLC-F-00606, Rev. 0, Washington Safety Management Solutions, Aiken, SC, May 2007.

91. Beck, R.S. B-25 Accident Analysis Material At Risk. S-CLC-F-00603, Rev. 1, Washington Safety Management Solutions, Aiken, SC, July 2007.

92. Simmons, R, High Activity Drain Tank Design Calculation. T-CLC-F-00415, High Activity Drain Tank Design Calculations, Rev. 0, Westinghouse Savannah River Company, Aiken, SC, December 2007.

93. Strudel, G.T., High Activity Drain (HAD) Equipment Anchorage & Pipe Support Design Calculation. Rev. 0, Westinghouse Savannah River Company, Aiken, SC, December 2007.

94. Nuclear Criticality Safety Evaluation: F/H Area Laboratory. N-NCS-F-00126, Rev. 2, Savannah River Nuclear Solutions, Aiken, SC

95. Elliott, S. K. F/H Lab 772-F& 772-1F Full Facility Fire Accident Analysis to Address Flashing Spray Release, S-CLC-F-00637, Rev 1, Savannah River Nuclear Solutions, Aiken, SC

96. Hope, E.P. Accident Consequence Analyses for the LR-56 Shipments from F/H Laboratories to H-Area. S-CLC-G-00353, Rev. 1, Savannah River Nuclear Solutions, Aiken, SC.

3.6 TABLES

Table 3.3-1 Frequency Qualitative Rating Levels

Acronym	Description	Frequency Level (f) ($year^{-1}$)
A	Anticipated, Expected	$f \geq 10^{-2}$/yr
U	Unlikely	$10^{-4} \leq f < 10^{-2}$/yr
EU	Extremely Unlikely	$10^{-6} \leq f < 10^{-4}$/yr
BEU	Beyond Extremely Unlikely	$f < 10^{-6}$/yr

Table 3.3-2A Consequence Evaluation Levels for Hazard Receptors

Consequence Level (Abbreviation)		Offsite Public	Facility Worker	Collocated Worker
High (H)	Non-rad/Non-chemical Injury**		Prompt worker fatality; serious injury that is immediately life threatening or permanently disabling; C> 100 rem; or radiological material quantity exceeds Hazard Category 3 threshold (per DOE-STD-1027); or high consequence injury due to radiological release or exposure	Prompt worker fatality, serious injury that is immediately life threatening or permanently disabling C > 100 rem; or high consequence injury due to radiological release or exposure
	Radiological	C ≥ 25 rem		
	Chemical	C ≥ PAC-2	Uniform distribution of total release C ≥ PAC-3, or high consequence injury due to chemical release or exposure	C ≥ PAC-3; or ≥ 29 CFR 1910.119 TQ released; or high consequence injury due to chemical release or exposure
*Moderate (M)	Non-rad/Non-chemical Injury		Serious injury, no immediate loss of life, no permanent disabilities, hospitalization required 25 ≤ C < 100 rem; or moderate consequence radiological related injury	Serious injury, no immediate loss of life, no permanent disabilities, hospitalization required 25 ≤ C < 100 rem; or moderate consequence radiological related injury
	Radiological	5.0 ≤ C < 25 rem		
	Chemical	PAC-1 ≤ C < PAC-2	Uniform distribution of total release PAC-2 ≤ C < PAC-3; or moderate consequence chemical related injury	PAC-2 ≤ C < PAC-3; or moderate consequence chemical related injury
Low (L)	Non-rad./Non-chemical injury		Minor injuries, no hospitalization 5.0 ≤ C < 25 rem or low consequence radiological related injuries	Minor injuries, no hospitalization 5.0 ≤ C < 25 rem or low consequence radiological related injuries
	Radiological	0.5 ≤ C < 5.0 rem		
	Chemical	PEL-TWA ≤ C < PAC-1	Uniform distribution of total release PAC-1 ≤ C < PAC-2 or low consequence chemical related injuries	PAC-1 ≤ C < PAC-2 or low consequence chemical related injuries
Negligible (N)	All	< Low	< Low	< Low

* SC or SS controls respectively are required if an event has moderate consequences that challenge (i.e., does not have to exceed) high radiological or chemical exposure/worker injury consequences. For events having moderate consequences that do not challenge the high range, facility controls and/or safety programs should be selected.
** SS required in nuclear facilities for prompt fatality, life threatening, or permanently disabling injuries for non-rad/non-chemical events that are not covered by national codes and standards.

Table 3.3-2B Risk Binning Matrix for the Offsite Public Receptor

Frequency → / Consequence ↓	Beyond Extremely Unlikely ($f < 10^{-6}$/yr)	Extremely Unlikely ($10^{-6} \leq f < 10^{-4}$/yr)	Unlikely ($10^{-4} \leq f < 10^{-2}$/yr)	Anticipated ($f \geq 10^{-2}$/yr)
High	**C/A3***	**A2**	**A1**	**A1**
Moderate	**C/B1****	**B1**	**B1**	**B1**
Low	**C**	**B**	**B**	**B**
Negligible	**C**	**C**	**C**	**C**

Key:

Region A1. Unmitigated events in Region "A1" due to radiological release require controls (SC for public and SS for workers), and are **highly recommended** for additional Levels of Control (LOC) for all receptors per Ref. 18. Unmitigated events in Region "A1," due to chemical release or prompt fatality (etc.), require SS controls and **highly recommended** for additional LOC per Ref. 18. The goal is that the mitigated consequence is moved well into the B region, and possibly the "C" region or the event is prevented.***

Region A2. Unmitigated events in Region "A2" due to radiological release require controls (SC for the public and SS for workers), and are **recommended** for additional Levels of Control for all receptors per Ref. 11. Unmitigated events in Region "A2," due to chemical release or prompt fatality (etc.), require SS controls and **recommended** for additional Levels of Control per Ref. 18. The goal is that the mitigated consequence is moved well into the B region, and possibly the "C" region or the event is prevented.***

Region A3. Unmitigated events considered credible per E7, 2.25 falling in Region "A3" due to radiological release require controls (SC for the public and SS for workers), and are considered for additional LOC for CW or public per Ref. 18. Unmitigated events falling in Region "A3," due to chemical release or prompt fatality (etc.), require SS controls and consideration for additional LOC per Ref. 18. The desired result is that the mitigated consequence is moved into the "B" or "C" region, or the event is prevented."***

Region B1. For unmitigated events having moderate "B1" consequences that challenge the high consequence criteria: SC controls are required for radiological events affecting the public; SS controls are required for chemical events affecting workers or the public; and SS controls are required death/acute physical injury due to non-rad/non-chemical events affecting workers. For unmitigated events having moderate consequences that do not challenge the high consequence range, facility controls and/or safety programs should be selected. Documentation must be provided when facility controls or safety programs are not implemented.

Region B. Unmitigated events having low "B" consequences may require facility controls or safety programs. Justification must be provided when facility controls or safety programs are not implemented.

Region C
Events falling in Region "C" are not considered for controls. However, there may be events in this region that require the addition of facility Controls because the frequency is higher than desired, the occurrence of the uncontrolled event is unacceptable to management in any event, or the uncontrolled event is unacceptable for programmatic or political reasons.

Table 3.3-3 Building 772-F Radiological and Fissile Inventory Limits (Ref. 42, 95)

Inventory	Amount
Total activity of alpha emitters in building (includes high-activity drain transfer tanks)	310 Ci[a]
Total activity of Pu-241 in building	3,720 Ci[a]
Total activity beta-gamma emitters, excluding Pu-241 and H-3, in building	2,600 Ci[b]
Total activity of tritium in laboratories or high-activity drain transfer tank system	2,450 Ci
Total activity of tritium on Service Floor	8,120 Ci
Total activity of radionuclides in any one radiohood, radiobench, or chemical hood, excluding residual contamination	Hazard Category 3 Threshold for Radionuclides[c]
Limits for rooms containing propane or VOC: • Total activity of radionuclides in the room, excluding residual contamination.	42 Ci Alpha 500 Ci Pu-241 210 Ci β/γ 100 Ci H-3
Limits FSR material[e] for Building: • Total activity of radionuclides in the Building, excluding residual contamination.	15 Ci Alpha 178 Ci Pu-241 75 Ci β/γ
Total mass of fissile material in any room, corridor, or HAD Tank System	400 g[d]

a Alpha emitters can be Am-241, Pu-239, Pu-238, U-235, U-233, etc. and along with Pu-241 can be in any combination of chemical forms including dissolved or suspended in solution, metal, or oxide.

b Inventory controls for beta/gamma emitters not associated with alpha emitters are not implemented at this time. This limit will be implemented before operations involving greater than Ci amounts of beta/gamma emitters start up.

c DOE-STD-1027-92 (Ref. 4) provides complete Hazard Category 3 thresholds for radionuclides. Those commonly found in F/H Lab are listed in SAR Table 3.4-6. The radionuclide inventory can be 100% of the Hazard Category 3 threshold amount, so long as the sum total of the threshold ratios of each radionuclide does not exceed one (i.e., [inventory of isotope A/threshold of isotope A] + [inventory of isotope B/threshold of isotope B] + [inventory of isotope n/threshold of isotope n] less than 1).

d Pu-239 fissile equivalent.

e FSR material is based on configuration- Containers susceptible to flashing spray release are unvented glass, Teflon, and metal containers. High density polyethylene, low density polyethylene, polyethylene terephthalate glycol, and polypropylene containers or containers with caps made of high density polyethylene, low density polyethylene, polyethylene terephthalate glycol, and polypropylene or have non-metallic vents are not susceptible to flashing spray release.

Table 3.3-4 Building 772-1F Radiological and Fissile Inventory Limits (Ref. 42, 95)

Inventory	Amount[e]
Total activity of alpha emitters in building	42 Ci[a,c]
Total activity of Pu-241 beta emitters in building	500 Ci[a,c]
Total activity of beta/gamma emitters in building, excluding Pu-241 and H-3	210 Ci[c]
Total activity of tritium in building	100 Ci [c]
Total activity of radionuclides in any one radiohood, radiobench, or chemical hood, excluding residual contamination	Hazard Category 3 Threshold for Radionuclides[b]
Limits FSR material[f] for Building: • Total activity of radionuclides in the Building, excluding residual contamination.	10 Ci Alpha 119 Ci Pu-241 50 Ci β/γ
Total mass of fissile material in any room or corridor	400 g[d]

a Alpha emitters can be Am-241, Pu-239, Pu-238, U-235, U-233, etc. and along with Pu-241 can be in any combination of chemical forms including dissolved or suspended in solution, metal, or oxide.

b DOE-STD-1027-92 (Ref. 4) provides complete Hazard Category 3 thresholds for radionuclides. Those commonly found in F/H Lab are listed in SAR Table 3.4-6. The radionuclide inventory can be 100% of the Hazard Category 3 threshold amount, so long as the sum total of the threshold ratios of each radionuclide does not exceed one (i.e., [inventory of isotope A/threshold of isotope A] + [inventory of isotope B/threshold of isotope B] + [inventory of isotope n/threshold of isotope n] less than 1).

c Nuclear material received at 772-1F's Sample Receiving that is in transit to or from 772-F in unopened containers (includes samples, standards, and recoverable materials) will not be included in the radiological inventory of 772-1F. This material will be limited to radiological inventories assumed in the Sample Tunnel spill accident, i.e. 310 Ci of alpha emitters, 3,720 Ci of Pu-241, 2,600 Ci of fission products, and 2,450 Ci of H-3.

d Pu-239 fissile equivalent

e Limits for laboratory modules containing propane or VOC are covered by the facility inventory

f FSR material is based on configuration- Containers susceptible to flashing spray release are unvented glass, Teflon, and metal containers. High density polyethylene, low density polyethylene, polyethylene terephthalate glycol, and polypropylene containers or containers with caps made of high density polyethylene, low density polyethylene, polyethylene terephthalate glycol, and polypropylene or have non-metallic vents are not susceptible to flashing spray release.

Table 3.3-5 B-25 Waste Container Staging Areas: Maximum Allowable Inventory of Radionuclides
(Ref. 91)

Radionuclide	Bounding Inventory (Ci)
H-3	1.00E+03
Sr-90	7.22E+02
Cs-137 (and all other beta/gamma emitting isotopes except H-3, Sr-90, and Pu-241)	2.00E+03
Pu-241	1.10E+02
Pu-239 (and all other alpha emitting isotopes)	4.70E+01

These isotopes are representative of the total allowed inventory group limit of 2,722 Ci of beta-gamma emitters, with the exception of tritium (1,000 Ci allowed) and Pu-241 (110 Ci allowed), and the total allowed inventory group limit of 47 Ci of alpha emitters.

Table 3.3-6 Building 772-4F Estimated Radiological Inventory (Ref. 40)

Radionuclide	Inventory (Ci)
Sr-90	7.45E-03
Cs-134	5.45E-03
Cs-137	3.63E-02
Ce-144	8.10E-03
U-235	3.00E-04
Pu-238	3.72E-02
Pu-239	4.10E-03
Am-241	8.50E-04
Cm-244	1.00E-04

Table 3.3-7 Building 772-F and 772-1F Hazardous Chemical Inventory (Ref. 43)

Chemical	Onsite 100 m limit (pound)
1-Hydroxyethylidine Biphosphonic Acid	1.84E+05
Acetic Acid Glacial	3.15E+04
Acetic Anhydride	7.65E+03
Acetone	1.48E+05
Acetonitrile	7.40E+02
Acetophenone	1.84E+04
Aluminon	2.75E+01
Aluminum	1.84E+04
Aluminum Chloride	3.67E+04
Aluminum Fluoride	2.75E+04
Aluminum Hydroxide	1.47E+06
Aluminum Nitrate	3.67E+04
Aluminum Oxide	5.51E+04
Aluminum Potassium Sulfate	1.10E+05
Amino-1,3-Naphthalenedisulfonic Acid (7-)	1.10E+06
Ammonia	3.82E+02
Ammonium Acetate	5.51E+05
Ammonium Bifluoride	9.18E+03
Ammonium Bisulfate	3.67E+04
Ammonium Carbonate	1.28E+05
Ammonium Chloride	1.84E+05
Ammonium Citrate Dibasic	1.10E+05
Ammonium Dichromate	3.67E+01
Ammonium Fluoride	9.18E+03
Ammonium Formate	1.84E+04
Ammonium Hexachlorohydrate (III)	1.84E+05
Ammonium Hexafluorosilicate	4.59E+04
Ammonium Hydroxide	1.84E+04
Ammonium Iodide	1.10E+05
Ammonium Molybdate	9.18E+04
Ammonium Molybdophosphate	9.18E+04
Ammonium Nitrate	1.84E+05
Ammonium Oxalate	1.84E+04
Ammonium Pentaborate	1.84E+05
Ammonium Persulfate	1.84E+03
Ammonium Phosphate, Mono & Dibasic	1.84E+05
Ammonium Silicofluoride	4.59E+04
Ammonium Thiocyanate	7.34E+05
Ammonium Thiosulfate	1.84E+05
Amyl Alcohol Mixed Isomers	1.28E+05
Anhydrone	1.47E+06
Anthraquinone Dye	1.84E+04
Antimony Pentachloride	9.18E+03
Antimony Potassium Tartrate Trihydrate	9.18E+03
Antimony Trioxide	9.18E+03
Argon Gas	2.99E+06
Argon, cryogenic, outdoors tank	2.99E+06
Ascorbic Acid	1.84E+05
Barbituric Acid	4.59E+05
Barium Chloride	9.18E+03

Table 3.3-7 Building 772-F and 772-1F Hazardous Chemical Inventory Limit (Ref. 43) (Continued)

Chemical	Onsite 100 m limit (pound)
Barium Diphenylamine Sulfonate	9.18E+02
Barium Hydroxide	9.18E+03
Barium Nitrate	9.18E+03
Bathophenanthroline	2.20E+03
Benzenearsonic Acid	1.47E+03
Benzoic Acid	5.51E+02
Bipheny 99%	2.57E+03
Bis (2-Ethylhexyl) Hydrogen Phosphate	1.47E+02
Bismuth Nitrate	9.18E+04
Boric Acid	3.67E+05
Boron	1.84E+04
Boron Oxide	1.84E+05
Butane	3.47E+04
Butanol	1.11E+03
Butanone (2-)	6.50E+03
Butoxyethanol (2-)	2.22E+05
Cadmium Sulfate	1.84E+02
Calcium	1.84E+04
Calcium Carbonate	1.84E+05
Calcium Chloride	1.47E+05
Calcium Fluoride	4.59E+04
Calcium Hydroxide	1.84E+06
Calcium Nitrate	1.84E+05
Calcium Oxide	3.67E+04
Calcium Sulfate	1.84E+05
Carbon	3.67E+03
Carbo-Sorb E (methoxypropylamine)	4.04E+02
Ceric Ammonium Nitrate	1.84E+05
Ceric Ammonium Sulfate	1.84E+05
Ceric Oxide	1.84E+05
Ceric Sulfate	1.84E+05
Cerium metal chips	1.84E+04
Cerium Oxalate	1.84E+05
Cerium Oxide	1.84E+05
Cerous Nitrate	1.84E+05
Cesium	3.67E+02
Chloroform (trichloromethane)	3.58E+04
Chromic Acid - Flake	3.67E+02
Chromium Sesquioxide	9.18E+03
Chromium Trioxide	3.67E+02
Citric Acid	1.84E+04
Cobalt Nitrate	4.59E+04
Cobalt Oxide	2.75E+05
Cobaltous Carbonate	7.34E-01
Copper Oxide	3.67E+03
Copper, Copper Metal, Copper Accelerator	1.84E+04
Cupric Nitrate	7.34E+04
Cupric Oxide	1.84E+04
Cupric Sulfate	2.20E+04
Cuprous Chloride	1.84E+04

Table 3.3-7 Building 772-F and 772-1F Hazardous Chemical Inventory Limit (Ref. 43) (Continued)

Chemical	Onsite 100 m limit (pound)
Cyclohexane	3.28E+04
Deuterium Oxide (Heavy Water)	1.20E+08
Dibutyl Phosphate, TBP	1.89E+04
Dichlorodifluoromethane	3.63E+05
Dichloroethane (1,2-)	1.49E+03
Dichloromethane	9.55E+05
Diethylamine	8.78E+02
Diethylene Glycol	1.59E+05
Diethylene Triamine Pentaacetic Acid 97% (DTPA)	3.67E+02
Dihexyl-N, N-diethylcarbamoyl Methyl Phosphonate	1.84E+05
Dimethyglyoxime	1.84E+04
Dimethylamino-benzaldehyde P-	5.51E+04
Diphenylamine	1.84E+04
Diphenylguanidine (1,3-)	1.47E+03
Dipropylene Glycol Methyl Ether	3.34E+05
Dodecane	1.92E+04
Dodecyl Alcohol	1.84E+04
DPD Free Chlorine Reagent	1.10E+02
DPD Total Chlorine Reagent	1.10E+02
Dysprosium Nitrate	3.67E+02
Ecolite (+)	1.47E+05
Ethoxyethyl Acetate (2-)	4.96E+04
Ethyl Acetate	5.29E+04
Ethyl Alcohol	4.56E+04
Ethyl Ether	1.11E+04
Ethyl Phthalate	9.99E+04
Ethylene Glycol	3.73E+04
Ethylene Glycol Monomethly Ether	2.86E+04
Ethylene Glycol Monopropyl Ether	1.17E+05
Ethylenediaminetetraacetic Acid (EDTA)	2.75E+04
Ferric Ammonium Sulfate	1.84E+04
Ferric Nitrate	1.84E+04
Ferric Sulfate	1.84E+04
Ferrous Ammonium Sulfate	1.10E+04
Ferrous Chloride	1.84E+04
Ferrous Sulfamate	1.84E+04
Ferrous Sulfate	1.84E+04
Ferrous Sulfide	1.84E+04
Flon (Freon substitute)	1.84E+05
Formaldehyde 37% Solution	4.52E+03
Formic Acid	6.90E+03
Freon 113	8.44E+04
Gadolinium Nitrate, solid	1.84E+05
Gallium Oxide	1.84E+05
Gallium, Ga	1.84E+05
Germanium Oxide	5.51E+04
Glycerine	1.84E+04
Glycerol	1.84E+04
Halon 1211	1.24E+04
Halon 1301 Fire Extinguishant	5.93E+04

Table 3.3-7 Building 772-F and 772-1F Hazardous Chemical Inventory Limit (Ref. 43) (continued)

Chemical	Onsite 100 m limit (pound)
Helium Compressed	2.94E+05
Hematoxylin	1.84E+04
Heptane	1.32E+04
Hexamethyldisilazane	4.41E+01
Hexamethylene Tetramine Methenamine	3.67E+02
Hexane	6.46E+03
Hth Dry Chlorine Granular	1.74E+04
Hydranal Coulomat / AG	3.67E+02
Hydriodic Acid 47-5 1 %	9.60E+02
Hydrobromic Acid 48%	3.63E+03
Hydrochloric Acid	1.09E+04
Hydrofluoric Acid	6.02E+03
Hydrogen Peroxide Solutions 30% to 50%	2.55E+05
Hydroquinone	1.84E+04
Hydroxylamine Hydrochloride	2.20E+05
Hydroxylamine Nitrate (HAN)	3.67E+03
Hydroxylamine Sulfate	2.75E+05
Hydroxylammonium Sulfate	1.84E+04
Hypophosphorus Acid 50% Solution	1.84E+05
Indigo Carmine	5.51E+05
Iodic Acid	1.84E+03
Iodine	1.90E+03
Iron	1.84E+05
Iso-Amyl Alcohol	1.65E+05
Isobutane	2.86E+04
Isooctane	3.67E+03
Isopropyl Alcohol	7.22E+03
Lactic Acid, 85%Soln in Water	1.10E+06
Lanthanium Impurity Standard	1.84E+05
Lanthanum Alizarin	1.84E+05
Lanthanum Nitrate	7.34E+04
Lanthanum Oxide	1.84E+06
Lead Acetate	9.18E+02
Lead Dioxide	9.18E+02
Lead Nitrate	9.18E+02
Lead in Releasable Form	9.18E+02
Leco set 7007 Powder	1.84E+05
Lithium Carbonate	2.75E+04
Lithium Fluoride	4.59E+04
Lithium Hydroxide	3.67E+03
Lithium Nitrate	1.84E+05
Magnesite	1.84E+05
Magnesium Chloride	1.84E+05
Magnesium Metal	1.84E+04
Magnesium Nitrate	1.84E+05
Magnesium Oxide	1.84E+05
Magnesium Perchlorate	4.59E+05
Maleic Acid	2.20E+04
Malonic Acid	3.67E+04
Manganese Dioxide	1.84E+04

Table 3.3-7 Building 772-F and 772-1F Hazardous Chemical Inventory Limit (Ref. 43) (continued)

Chemical	Onsite 100 m limit (pound)
Manganese Nitrate	1.84E+04
Manganese Oxide	1.84E+04
Manganous Sulfate	1.84E+03
Manganous Sulfide	1.84E+04
Mapp Gas	7.48E+03
Mercapton / Thiazole	1.47E+04
Mercuric Chloride	3.67E+02
Mercuric Nitrate	3.67E+02
Mercuric Thiocyanate	3.67E+02
Mercurous Chloride	3.67E+02
Mercury	3.67E+02
Methane	1.21E+04
Methanesulfonic Acid, 99%	2.75E+04
Methanol	9.62E+03
Methyl Acetylene	2.05E+04
Methyl Iodide	2.13E+03
Methyl Isobutyl Ketone	1.50E+04
Methyl trioctyl ammonium chloride	7.34E+03
Methylene Chloride	1.91E+04
Methyllactic Acid (2-)	1.84E+05
Mineral Spirits	1.84E+05
Molybdenum	9.18E+03
Monochloroacetic Acid	6.61E+02
Monophase- S	1.84E+04
Neodymium Nitrate	5.51E+05
Nickel Nitrate	3.67E+04
Nickel Pellets	3.67E+04
Nickel Sulfate Hexahydrate	1.84E+03
Nickelous Nitrate	3.67E+04
Niobium (V) Oxide	1.84E+05
Nitric Acid	1.42E+04
Nitric Acid Fuming 90%	2.84E+02
Nitrobenzene	7.39E+02
Nitrogen	2.11E+06
Opti-Fluor	2.20E+03
Oxalic Acid	1.84E+05
Paraffins (N-C12-C14 Paraffins)	3.67E+03
Permafluor E+ (MSDS 21106)	1.10E+03
Permafluor-V	7.64E+03
Petroleum Distallate	1.84E+05
Phenanthroline 1,10 - Include monohydrate, ferrous sulfate complex and ortho	2.20E+03
Phenanthroline Ferrous Sulfate O-Complex	2.20E+04
Phenol	7.07E+04
Phenolphthalein	5.51E+04
Phenylboric Acid	2.20E+04
Phosphoric Acid	1.84E+06
Phosphorus Pentachloride	4.59E+04
Phosphorus Pentoxide	9.18E+04
Platinum, Catalyst	1.84E+04
Potassium	1.47E+01

Table 3.3-7 Building 772-F and 772-1F Hazardous Chemical Inventory Limit (Ref. 43) (continued)

Chemical	Onsite 100 m limit (pound)
Potassium Bisulfate	7.34E+05
Potassium Bromate	1.47E+05
Potassium Bromide	9.18E+05
Potassium Carbonate	1.84E+05
Potassium Chlorate	1.10E+06
Potassium Chromate	3.67E+02
Potassium Citrate	2.20E+05
Potassium Columbate	9.18E+05
Potassium Dichromate	3.67E+02
Potassium Ferricyanide	9.18E+05
Potassium Fluoride	4.59E+04
Potassium Hydroxide	7.34E+03
Potassium Iodate	1.28E+05
Potassium Iodide	2.20E+04
Potassium Nitrate	7.34E+04
Potassium Nitrite	2.75E+03
Potassium Oxalate	5.51E+05
Potassium Persulfate	2.20E+05
Potassium Phosphate, Mono & Dibasic	1.84E+05
Potassium Pyrosulfate	1.84E+05
Potassium Sulfate	1.47E+04
Potassium Sulfite	1.84E+04
Potassium Thiocyanate	2.20E+05
Potassium Chloride	5.51E+04
Potassium Permanganate	1.84E+04
Praseodymium Nitrate	5.51E+05
Praseodymium Nitrate Solution	5.51E+05
Propane	1.39E+04
Propanol (1-)	4.52E+03
Propanol (-2) aluminum derivative	7.34E+01
Pyridine	5.93E+02
Pyroxylin	3.67E+02
Quartz	1.84E+03
Quinoline	9.69E+04
Quinolinol (8-)	7.34E+04
Rubidium Chloride	1.28E+03
Ruthenium Tetrachloride	2.75E+05
Salicylic Acid	1.47E+05
Samarium Nitrate	5.51E+05
Scintillation Cocktail, Ultima Gold AB	7.34E+03
Scintillation Cocktail, Ultima Gold XR	1.28E+03
Selenium Dioxide	3.67E+03
Silicon (II) Oxide [SiO]	1.84E+05
Silver Chloride	1.84E+05
Silver Nitrate	1.84E+02
Sodium Acetate	1.10E+06
Sodium Arsenate	7.34E+00
Sodium Arsenite	7.34E+00
Sodium Bicarbonate	1.84E+05
Sodium Bisulfate	9.18E+04

Table 3.3-7 Building 772-F and 772-1F Hazardous Chemical Inventory Limit (Ref. 43) (continued)

Chemical	Onsite 100 m limit (pound)
Sodium Bisulfite	9.18E+04
Sodium Borate	1.84E+04
Sodium Borohydride	1.47E+04
Sodium Bromate	1.28E+05
Sodium Bromide	1.28E+05
Sodium Carbonate	1.84E+05
Sodium Chloride, Solid	1.10E+06
Sodium Chromate	3.67E+02
Sodium Citrate	1.84E+05
Sodium Cobaltinitrite	2.75E+04
Sodium Dichromate	3.67E+02
Sodium Fluoride	4.59E+04
Sodium Hydrosulfite	1.84E+04
Sodium Hydroxide	1.47E+05
Sodium Iodide	5.51E+04
Sodium Metabisulfite	9.18E+04
Sodium Meta-vanadate Tech 90%	2.20E+04
Sodium Nitrate	3.67E+05
Sodium Nitrite	3.67E+03
Sodium Oxalate	1.84E+05
Sodium Perchlorate	1.84E+05
Sodium Phosphate	1.84E+06
Sodium Pyrophosphate	1.84E+05
Sodium Silicate Caustic	3.67E+05
Sodium Sulfate	1.84E+05
Sodium Sulfite	1.84E+04
Sodium tetraborate decahydrate	9.18E+04
Sodium Tetraphenylborate, STPB	9.18E+04
Sodium Thiosulfate	1.84E+05
Spodumene (mineral)	3.67E+04
Stannous Chloride	4.59E+04
Stearic Acid	1.28E+04
Stilbene 420	1.84E+05
Strontium Nitrate	1.84E+05
Sulfamic Acid	9.18E+05
Sulfosalicylic Acid	7.34E+05
Sulfur	1.84E+03
Sulfur, elemental	3.67E+01
Sulfuric Acid	3.67E+04
Tantalum (V) Oxide	1.84E+06
Terphenyl (P-)	3.30E+03
Tetrabutylammonium Dihydrogen Phosphate, mono/dibasic, & salt soln.	1.84E+05
Tetrachloroethane	5.04E+03
Tetrachloroethylene	9.96E+03
Tetrapropylammonium Hydroxide 10% Aqueous Solution	2.75E+04
Thenoyltrifluoroacetone (2-)	9.18E+03
Thiourea	1.84E+04
Thorium	1.84E+05
Thorium Nitrate	1.47E+05
Thorium Oxide	1.84E+06

Table 3.3-7 Building 772-F and 772-1F Hazardous Chemical Inventory Limit (Ref. 43) (continued)

Chemical	Onsite 100 m limit (pound)
Thulium Chloride Heptahydrate	1.84E+05
Thulium Oxide	1.84E+05
Thyodene	1.84E+04
Tin (II) Oxide	3.67E+04
Tin, Tin Metal, Capsules, Flux, Plugs And Accelerator	3.67E+04
Titanium (II) Chloride 99%	3.67E+04
Titanium (II) Oxide	1.84E+05
Titanium Based Alloy	1.84E+05
Titanium Dioxide	1.84E+05
Todine Solutions	2.20E+04
Toluene	8.30E+03
Total Sequestrant Reagent #5	1.43E+05
Tri (2-ethyl hexyl) phosphate	4.59E+03
Tributyl Phosphate	4.00E+03
Trichloroethane (1,1,1-)	2.80E+04
Trichlorotrifluoroethane (Freon 113)	8.44E+04
Triethanolamine	9.18E+03
Tri-iso-octylamine	4.59E+04
Trimethylchlorosilane	5.70E+03
Tri-o-tolyl Phosphate	3.30E+04
Tris (Hydroxymethyl) Aminomethane	1.84E+05
Tungsten (IV) Oxide	5.51E+05
Tungsten metal powder	3.67E+04
Undecane (see Paraffin)	1.41E+04
Uranium (V,VI) Oxide	7.34E+03
Uranium Black Oxide	7.34E+03
Uranium Metal In Solution	7.34E+03
Uranium Oxide	7.34E+03
Uranyl Acetate	7.34E+03
Uranyl Nitrate	2.20E+03
Urea	5.51E+03
Vanadium Oxide	2.57E+04
Vanadyl Sulfate	1.84E+03
Xtraction II	4.59E+05
Xylene	6.37E+03
Xylenol Orange Tetrasodium Salt	1.84E+04
Zinc	1.84E+04
Zinc Acetate	5.51E+04
Zinc Chloride	1.47E+05
Zinc Metal Powder	1.84E+04
Zinc Oxide	5.51E+04
Zinc Shot	1.84E+05
Zinc Stearate	1.84E+04
Zinc Sulfate	7.34E+03
Zircaloy - 4 {Zirconium Based Alloy}	3.67E+04
Zirconium Chloride	9.18E+04
Zirconium Oxide	9.18E+04
Zirconium Oxynitrate Hydrate	9.18E+04
Zirconyl Nitrate	9.18E+04

Table 3.4-1 Operational-Related and Natural Phenomena Event Frequencies for the F/H Lab

Event Description	Building 772-F (per year)	Building 772-1F (per year)	Building 772-4F (per year)
Operational-Related DBAs:			
Explosions	1.00E-03	1.00E-03	NA
Facility fires	1.00E-01 Nominal[a]	1.00E-01 Nominal[a]	1.00E-01 Nominal[a]
B-25 waste container staging areas fire	NA	7.5E-02[c]	NA
Uncontrolled reaction	2.90E-01	1.40E-01	NA
Uncontrolled reaction in a glovebox (full facility inventory of Pu-238, 200 Ci, involved)	6.17E-03	NM	NA
Uncontrolled reaction in a glovebox (one-fifth of facility inventory of Pu-238, 40 Ci, involved)	2.47E-02	NM	NA
Leaks	4.30E+00[d]	2.40E+00	NA
Overflows	5.40E-01[d]	5.40E-01	NA
Spills	8.50E+00[d]	1.40E+00	NA
Plugs	2.00E+00[d]	1.00E+00	NA
Drops/falls	1.05E+01[d]	7.10E-01	NA
Drum rupture (Service Floor only)[e]	1.31E-05	NA	NA
Leak/spill/drops/falls (sample tunnel)	2.90E-01	NA	NA
Low-energy event (i.e., leak/spill/ pluggage on Service Floor)	3.01E+00	NA	NA
Natural Phenomena DBAs:			
Earthquake (greater than 0.05g)	2.00E-03[f]	2.00E-03[f]	NL[g]
Earthquake (greater than 0.05g) and fire	2.00E-04[f]	2.00E-04[f]	NL[g]
Wind (greater than 100-mph)[o]	NA	3.00E-03[f]	NA
Tornado (greater than 100-mph)[o]	NA	8.00E-05[f]	NA
Natural Phenomena Beyond DBAs:			
Earthquake (greater than 0.2g)[h]	2.00E-04[f]	NL[i]	2.00E-04[f]
Earthquake (greater than 0.2g) and fire[h]	4.00E-05[f]	NL[i]	NL[g]
Earthquake (greater than 0.13g)[j]	NL[k]	1.00E-03[f]	NL[g]
Earthquake (greater than 0.13g) and fire[j]	NL[k]	2.00E-04[f]	NL[g]
Wind (greater than 84-mph)[l]	NL[m]	NA	2.00E-02[f]
Wind (greater than 100-mph)[o]	NL[m]	NA	NL[p]
Tornado (greater than 137-mph)[l]	2.00E-05[f]	NA	NL[p]
Tornado (greater than 100-mph)[o]	NL[r]	NA	NL[p]
Tornado (greater than 84-mph)[l]	1.30E-04[f]	NA	1.30E-04[f]

Table 3.4-1 Operational-Related and Natural Phenomena Event Frequencies for the F/H Lab (Continued)

NA - Not applicable. Scenario is not applicable to this building.
NL - Frequency not listed (see additional notes)
NM - Deleted

a	The nominal frequency listed here corresponds to the "Anticipated" category
b	Deleted
c	Frequency is explained in Section 3.4.2.2 of this SAR.
d	Frequency is for events occurring in laboratories or associated areas (e.g., hallways, service corridor). Frequency does not include events occurring on Building 772-F Service Floor or areas where radionuclides are not present (e.g., lunchroom, conference rooms).
e	From S-CLC-F-00118 (Ref. 71)
f	Exceedance frequency
g	No consequences are expected as the result of this earthquake affecting Building 772-4F that would exceed the consequences of the greater than 0.2g Beyond DBE. Therefore, the frequency of this earthquake scenario has not been listed.
h	From S-CLC-F-00123 (Ref. 77)
i	For Building 772-1F, an earthquake is modeled as the DBE. Therefore, the frequency of the greater than 0.2g earthquake has not been listed for Building 772-1F.
j	From S-CLC-F-00122 (Ref. 65)
k	For Building 772-F, an earthquake greater than 0.05g but less than, or equal to, 0.2g falls within the DBE envelope. Therefore, the frequency of the greater than 0.13g earthquake has not been listed for Building 772-F.
l	From UCRL-53526 and S-CLC-F-00132 (Ref. 79, 87)
m	Building 772-F is designed for and capable of withstanding Performance Category 3 wind loads (i.e., 137-mph fastest-mile wind speed tornado). Consequences and frequencies associated with the Design Basis Straight Wind are not calculated or listed for Building 772-F.
n	Deleted
o	From S-CLC-F-00122 and UCRL-53526 (Ref. 64, 79)
p	Building 772-4F is designed for and capable of withstanding Hazard Category 3 wind loads (i.e., 84-mph straight wind). Therefore, for Building 772-4F, a straight wind greater than 84-mph or a tornado destroys the building. Straight wind or tornado wind speeds greater than 100-mph fall within the Beyond Design Basis envelope. Therefore, the frequencies for wind speeds greater than 100-mph are not listed.
q	Deleted.
r	Building 772-F is designed for and capable of withstanding Performance Category 3 wind loads (i.e., 137-mph fastest-mile wind speed tornado). A greater than 84-mph tornado that is within the Design Basis was modeled. A greater than 100-mph tornado is within the Design Basis envelope but was not modeled. Therefore, the frequency for the greater than 100-mph tornado has not been listed for Building 772-F.

Table 3.4-2 A Consequence Summary information for Design Basis Accidents Part A: Bounding Design Basis Accidents – (Accidents relevant to USQ screenings and evaluations.)

Event	MOI Consequence (rem)	OEP[b,e] Consequence (640 meters) (rem	Onsite Worker Consequence (100 meters) (rem)
Building 772-F			
Natural Phenomena Events			
Earthquake (greater than 0.05g) [a] and Fire	**2.0E-01**	**NC**	**5.2E+01**
Operational-Related Events			
Explosion VOC [c]	**7.7E-03**	**NC**	1.81E+01
Glovebox Fire	**2.0E-01**	**NC**	**5.2E+01**
Lab Module Fire	**2.0E-01**	**NC**	**1.3E+01**
Low-Energy Event (Sample Tunnel)	**7.09E-03**	**NC**	**9.29E+00**
Building 772-1F			
Natural Phenomena Events			
Tornado	9.6 E- 01	1.22 E+00	
Operational-Related Events			
Explosion VOC [c]	**7.7E-03**	**NC**	**1.81E+01**
Glovebox Fire	**6.0E-02**	**NC**	**7.4E+01**
Lab module Fire	**6.0E-02**	**NC**	**1.9E+01**
Building 772-4F			NC
Full Facility Fire	**1.12E-06**	**NC**	2.84E-03
B-25 Waste Container Staging Areas Impact Fire[d]	**1.39E-02**	**NC**	2.28E+01

a Consequence of the Earthquake and Fire scenario is the same as the consequence for the full facility fire scenario. The earthquake-related effect on the consequence is negligible based in application of EM IG.

b OEP is as 3 km for a 772-1F tornado.

c Consequences are recalculated for Revision 4 of the SAR using MACCS and ICRP-68/72 DCF and a ground level release. This represents the bounding explosion event discussed in section 3.4.2.1.

d Consequences are for a vehicle impact fire represents the bounding fire event

e The OEP consequences has not been re-calculated using 95% meteorology, but has been left for historical information.

Table 3.4-2 B Consequence Summary Information for Design Basis Accidents
Part B: Lesser DBAs – (Accidents not relevant to USQ screenings and evaluations)

Event	MOI Consequence[a] (rem)	OEP Consequence[a,i] (640 meters) (rem)
Building 772-F		
Natural Phenomena Events		
Earthquake (greater than 0.05g)		
200 Ci of Pu-238	1.22E-05	1.52E-05
200 Ci of plutonium Type 50 material, 2,600 Ci of Ru-106, and 1,800 Ci of Pu-241	1.67E-05	2.08E-05
2,450 Ci of H-3	3.16E-04	3.92E-04
Total	**3.45E-04**	**4.28E-04**
Operational-Related Events		
Glovebox Fire[b]	**1.57E-01**	**2.99E-02**
Uncontrolled Reaction[c]		
200 Ci of Pu-238 (full facility inventory of Pu-238)	1.10E-05	1.44E-05
40 Ci of plutonium Type 50 material, 680 Ci of mixed beta-gamma emitters, and 500 Ci of Pu-241	3.17E-06	4.15E-06
2,450 Ci of H-3	2.84E-04	3.72E-04
Total	**2.98E-04**	**3.91E-04**
Uncontrolled Reaction[d]		
40 Ci of Pu-238 (one-fifth of full facility inventory of Pu-238)	2.20E-06	2.88E-06
40 Ci of plutonium Type 50 material, 680 Ci of mixed beta-gamma emitters, and 500 Ci of Pu-241	3.17E-06	4.15E-06
2,450 Ci of H-3	2.84E-04	3.72E-04
Total	**2.89E-04**	**3.79E-04**
Other Minor Operational-Related Events (Low-Energy Event)[c]		
200 Ci of Pu-238	5.57E-07	7.31E-07
40 Ci of plutonium Type 50 material, 680 Ci of mixed beta-gamma emitters, and 500 Ci of Pu-241	2.89E-07	3.78E-07
2,450 Ci of H-3	2.84E-04	3.72E-04
Total	**2.85E-04**	**3.73E-04**
Low Energy Event, Drum Rupture (Service Floor)[c]	**3.49E-04**	**4.33E-04**
HAD/LAD Tank Deflagration[f]	**1.7E-03**	**4.1E+00**[f;]

Table 3.4-2 Consequence Summary Information for Design Basis Accidents
Part B: Lesser DBAs – (Accidents not relevant to USQ screenings and evaluations - Continued)

Event	MOI Consequence[a] (rem)	OEP Consequence[a,i] (640 meters) (rem)
Building 772-1F		
Natural Phenomena Events		
Earthquake (greater than 0.05g)[e]	**1.44 E-01**	**1.18 E+00**
Straight wind	3.15 E-01	NC
Operational-Related Events		
Uncontrolled Reaction[c]	**4.86E-04**	**1.15E-03**
Other Minor Operational-Related Events[c]	**4.80E-05**	**1.14E-04**

a The consequences in Part B of Table 3.4-2 were not recalculated for Rev. 1 of the SAR, because the accidents are not bounding and not relevant to USQ screenings and evaluations. These accidents were analyzed before the Rev. 0 of the SAR was completed, and the results were included in the SAR for the sake of information. The consequences here are bounded by the consequences in Part A of Table 3.4-2.

b The consequences of this event are bounded by the consequences of the full facility fire.

c The consequences of this event are bounded by the consequences of the Low-Energy Event (Sample Tunnel), which is in the "Anticipated" bin.

d The dose from one-fifth of the full-facility inventory of Pu-238 is one-fifth of the dose from the full inventory of Pu-238.

e The 772-1F full facility fire (Earthquake and Fire) scenario bounds the consequence of the Earthquake.

f The consequences are from S-CLC-F-00589 (Ref. 62). The consequences of this event are bounded by the consequences of the Glovebox Explosion in Table 3.4-2. The consequences for the OEP are at 100 meters not 640 meters.

g Deleted

h Beyond DBE events were analyzed and reported in the previous revision (Rev. 4) of the DSA. However, because the B-25 Staging Area is a Facility Hazard Category 3 simple storage area with low accident consequences, beyond DBEs are not included in the current revision (Rev. 5) of Chapter 3.

i. The OEP consequences has not been re-calculated using 95% meteorology, but has been left for historical information.

Table 3.4-3 Beyond Design Basis Accident Consequence Summary

Room/Event	MOI Consequence (rem)	OEP Consequence [j] (640 meters) (rem)
Building 772-F		
Natural Phenomena Events		
Earthquake (greater than 0.2g)[d]		
200 Ci of Pu-238	4.84E-01	3.97E+00
200 Ci of plutonium Type 50 material, 2,600 Ci of Ru-106, and 1,800 Ci of Pu-241	6.65E-01	5.42E+00
2,450 Ci of H-3	2.67E-03	2.18E-02
Total	**1.15E+00**	**9.41E+00**
Earthquake (greater than 0.2g) and Fire[d]	**1.40E+00**	**9.45E+00**
Tornado (greater than 137-mph)[b]	**1.72E+01**	**3.43E+01**
Operational-Related Events		
Uncontrolled Reaction[f]		
200 Ci of Pu-238 (full facility inventory of Pu-238)[a]	4.72E-01	3.97E+00
40 Ci of plutonium Type 50 material, 680 Ci of mixed beta-gamma emitters, and 500 Ci of Pu-241	1.35E-01	1.15E+00
2,450 Ci of H-3	6.01E-04	5.07E-03
Total	**6.08E-01**	**5.13E+00**
Uncontrolled Reaction[f]		
40 Ci of Pu-238 (one-fifth of full facility inventory of Pu-238)[a]	9.44E-02	7.94E-01
40 Ci of plutonium Type 50 material, 680 Ci of mixed Beta-gamma emitters, and 500 Ci of Pu-241	1.35E-01	1.15E+00
2,450 Ci of H-3	6.01E-04	5.07E-03
Total	**2.30E-01**	**1.95E+00**
Other Minor Operational-Related Events (Low Energy Event – Sample Tunnel Spill)	1.9E-02	5.0E-01
Drum Rupture (Service Floor)	**6.83E-04**	**5.58E-03**
Low-Energy Event (Service Floor)	**6.83E-04**	**5.58E-03**
Criticality (Filtered, Stack Release)[c]	**6.15E-03**	**1.74E-01**
Criticality (Unfiltered, Ground Release)[c]	**4.04E-02**	**5.97E-01**

Table 3.4-3 Beyond Design Basis Accident Consequence Summary (Continued)

Room/Event	MOI Consequence (rem)	OEP Consequence (640 meters) (rem)
Building 772-1F		
Operational-Related Events		
Uncontrolled Reaction[e]	1.42E-01	1.16E+00
Other Minor Operational-Related Events (Low Energy Event – Sample Tunnel Spill)[e]	9.45E-03	7.72E-02
Criticality (Filtered, Stack Release)[c]	6.15E-03	1.74E-01
Criticality (Unfiltered, Ground Release)[c]	4.04E-02	5.97E-01
Building 772-4F		
Natural Phenomena Events		
Earthquake (greater than 0.2g)	1.04E-04	8.52E-04
Wind (greater than 84-mph)	2.33E-04	NC
Tornado (greater than 84-mph)	2.25E-03	NC
B-25 Waste container Staging Areas[h, i]	NL	NL

[a] The dose from one-fifth of the full-facility inventory of Pu-238 is one-fifth of the dose from the full-facility inventory of Pu-238.

[b] For the tornado event, the onsite OEP is evaluated at the point in which the onsite concentration is the highest. For an F2 tornado, this occurs at 3km. The MOI is evaluated at a distance of approximately 8.9 km.

[c] The doses for the criticality accidents listed include the prompt gamma dose and the prompt neutron dose as well as the plume immersion dose. Only the plume immersion dose is calculated in the appropriate tables in Appendix H. The prompt gamma dose and the prompt neutron dose are significant contributors to the total dose only for the onsite receptor. The prompt gamma dose and the prompt neutron dose are not significant contributors to the total dose for the MOI due to the large distance to the individual.

[d] The consequences of this event are not recalculated with the revised inventory, because they are bounded by the consequences of the Tornado.

[e] The consequences of this event are not recalculated with the revised inventory, because they are bounded by the consequences of the Explosion.

[f] The consequences of this event are not recalculated for the reduced inventory. The doses in the table are conservative.

[g] The consequences are calculated using MACCS and ICRP-68/72 DCFs.

[h] Beyond DBE events were analyzed and reported in the previous revision (Rev. 4) of the DSA. However, because the B-25 Staging Area is a Facility Hazard Category 3 simple storage area with low accident consequences, beyond DBEs are not included in the current revision (Rev. 5) of Chapter 3.

[i] NL calculated but not listed.

[J] The OEP consequences has not been re-calculated using 95% meteorology, but has been left for historical information.

Table 3.4-4 Evaluation Guideline Comparisons for Operational-Related Design Basis Accidents

Accident	Frequency (per year)	Consequence for the MOI (rem)	Evaluation Guideline for the MOI (Ref. 3) (rem)	Consequence Comparisons Against MOI Evaluation Guideline	Consequence for the OEP (640 meters)[a,e] (rem)	Consequence for the Onsite Worker (100 meters)[b] (rem)
Frequency Range						
F > =1.0E-02						
Leaks/Spills/Drops/Falls (Building 772-F Sample tunnel)	2.90E-01	7.09E-03	**2.50E+01**	less than	NC	9.29E+00
B-25 Waste Container Staging Areas Impact Fire[c]	7.50E-02	1.39E-02	**2.50E+01**	less than	-	2.28E+01
Lab module fire (Bldg. 772-F)	1.00E-01	2.0E-01	**2.50E+01**	less than	NC	1.3E+01
Glovebox fire (Bldg. 772-F)	1.00E-01	2.0E-01	**2.50E+01**	less than	NC	5.2E+01
Lab module fire (Bldg. 772-1F)	1.00E-01	6.0E-02	**2.50E+01**	less than	NC	1.9E+01
Glovebox fire (Bldg. 772-1F)	1.00E-01	6.0E-02	**2.50E+01**	less than	NC	7.4E+01
1.0E-06 < =F less than 1.0E-04						
Drum Rupture (Bldg. 772-F, Service Floor)	1.31E-05	3.49E-04	**2.50E+01**	less than	4.33-04	N/A

[a] OEP doses are less than the EGs for worker safety (Ref. 18).

[b] Consequence values for the 100-meter onsite worker were calculated for the fire scenarios, a sample tunnel spill and 772F propane explosion. Doses calculated at 100 meters are less than the EGs (100 rem) for worker safety (Ref. 18).

[c] Consequences are from the current analyses for a bounding vehicle impact fire (Ref. 90) that were completed after Rev. 4 changes to the DSA. Frequency calculations were not updated. The Rev. 4 DSA frequency for the B-25 Waste Staging Area fire is left here for perspective. The current CHA estimates the frequency for a fire as anticipated and the frequency of a vehicle impact as "extremely unlikely".

[e] The OEP consequences has not been re-calculated using 95% meteorology, but has been left for historical information.

N/A Not available

Table 3.4-5 Evaluation Guideline Comparison for Natural Phenomena Design Basis Accidents

Accident	Frequency (per year)	Consequence for the MOI (rem)	Evaluation Guideline for the MOI (Ref. 3) (rem)	Consequence Comparisons Against MOI Evaluation Guideline	Consequence for the OEP (100 meters) (rem)
Earthquake (greater than 0.05g) and Fire (Bldg. 772-F)[a]	2.00E-04	2.0E-01	**2.50E+01**	less than	5.2E+01
Earthquake (greater than 0.05g) and Fire (Bldg. 772-1F)[a]	2.00E-03	6.0 E-02	**2.50E+01**	less than	7.4E+01

[a] Consequence of the Earthquake and Fire scenario is the same as the consequence for the Glovebox facility fire scenario. The earthquake-related effect on the consequence is negligible.

.

Table 3.4-6 Hazard Category 3 Thresholds for Important Isotopes at the F/H Lab

Radionuclide	HC-3 Threshold (Ci)	HC-3 Threshold (g)
Am-241	5.2E-01	1.5E-01
H-3	1.6E+04	1.6E+00
Sr-90	1.6E+01	1.2E-01
Ru-106	1.0E+02	3.0E-02
Cs-137	6.0E+01	6.9E-01
Ce-144	1.0E+02	3.1E-02
U-233	4.2E+00	4.4E+02
U-234	4.2E+00	6.7E+02
U-235	4.2E+00	1.9E+06
U-238	4.2E+00	1.3E+07
Pu-238	6.2E-01	3.6E-02
Pu-239	5.2E-01	8.4E+00
Pu-241	3.2E+01	3.1E-01

Table 3.4-7 Inventory for a Facility Fire in Building 772-F
(Ref. 95)

Isotope/Form	Total Activity[a] **(Ci)**	**FSR Activity[a] (Ci)**
Pu-239/ noncombustible liquid or metal	3.1E+02	1.5E+01
Pu-239/combustible liquid	1.0E-01	
Pu-241/ noncombustible liquid or metal	3.72E+03	1.78E+02
Pu-241/combustible liquid	2.0E+00	
Sr-90/ noncombustible liquid or metal	2.60E+03	7.5E+01
Sr-90/ combustible liquid	1.0E+00	
H-3/noncombustible liquid	1.06E+04	

[a] Bounding inventories of radionuclides cannot be exceeded with FSR as a partition of the Total Activity.

Table 3.4-8 DELETE

Table 3.4-9 Inventory for a Facility Fire in Building 772-1F
(Ref. 95)

Isotope/Form	**Total Activity[a] (Ci)**	**FSR Activity[a] (Ci)**
Pu-239/ noncombustible liquid or metal	4.2E+01	1.0E+01
Pu-239/combustible liquid	1.0E-01	
Pu-241/ noncombustible liquid or metal	5.0E+02	1.19E+02
Pu-241/combustible liquid	2.0E+00	
Sr-90/ noncombustible liquid or metal	2.10E+02	5.0E+01
Sr-90/combustible liquid	1.0E+00	
H-3/noncombustible liquid	1.00E+02	

[a] Bounding inventories of radionuclides cannot be exceeded with FSR as a partition of the Total Activity..

Table 3.4-10 Estimated Inventory for a Full Facility Fire in Building 772-4F (Ref. 40)

Isotope/Form	Best Estimate[a] (Ci)	Bounding[a] (Ci)
Pu-238/solid	3.72E-02	3.72E-02
Pu-239/solid	4.10E-03	4.10E-03
Am-241/solid	8.50E-04	8.50E-04
Cm-244/solid	1.00E-04	1.00E-04
U-235/solid	3.00E-04	3.00E-04
Cs-134/solid	5.45E-03	5.45E-03
Cs-137/solid	3.63E-02	3.63E-02
Ce-144/solid	8.10E-03	8.10E-03
Sr-90/solid	7.45E-03	7.45E-03

[a] Bounding inventories of radionuclides cannot be exceeded. Best-estimate inventories are the expected maximum inventories which are typical for most operations but which are not bounding for all operations.

Table 3.4-10A Sample Tunnel Spill – Bounding /Best Estimate
(Ref. 42)

Amount Pu-239 and Am-241 (Ci)	310
Am-241 Fraction (Ci)	100%
Amount Pu-241 (Ci)	3,720*
Amount Ru-106(Ci)	2,600*
Amount Sr-90 (Ci)	0
Alpha in Combustibles (Ci)	0
H-3 (tritiated water) (Ci)	2,450

* Note: Distributed uniformly with Am-241.

Table 3.4-11 Inventory for a B-25 Waste Container Staging Areas Impact Fire (Ref. 91)

Radionuclide	Bounding Inventory (Ci)
H-3	1.00E+03
Sr-90	7.22E+02
Cs-137 (and all other beta/gamma emitting isotopes except H-3, Sr-90, and Pu-241)	2.00E+03
Pu-241	1.10E+02
Pu-239 (and all other alpha emitting isotopes)	4.70E+01

These isotopes are representative of the total allowed inventory group limit of 2,722 Ci of beta-gamma emitters, with the exception of tritium (1,000 Ci allowed) and Pu-241 (110 Ci allowed), and the total allowed inventory group limit of 47 Ci of alpha emitters.

Table 3.4-12 Evaluation Guideline Comparisons for Operational-Related Beyond Design Basis Accidents

Accident	Frequency[a] (per year)	Consequence for the MOI (99.5% Met.) (rem)	Evaluation Guideline for the MOI (Ref. 3) (rem)	Consequence Comparison Against MOI Evaluation Guideline	Consequence for the OEP (640 meters)[b] (50% Met.) (rem)
Frequency Range					
F > =1.0E-02					
Uncontrolled Reaction (Bldg. 772-1F)[f]	1.40E-01	1.42E-01	**2.50E+01**	<	1.16E+00
Sample Tunnel Spill	2.90E-01	1.9E-02	**2.50E+01**		5.0E-01
Leaks (bounded by Sample Tunnel Spill) (Bldg. 772-F)	4.30E+00	1.9E-02	**2.50E+01**	<	5.0E-01
Leaks (bounded by Sample Tunnel Spill) (Bldg. 772-1F)e	2.40E+00	9.45E-03	**2.50E+01**	<	7.72E-02
Overflow (bounded by Sample Tunnel Spill) (Bldg. 772-F)	5.40E-01	1.9E-02	**2.50E+01**	<	5.0E-01
Overflow (bounded by Sample Tunnel Spill) (Bldg. 772-1F)e	5.40E-01	9.45E-03	**2.50E+01**	<	7.72E-02
Spills (bounded by Sample Tunnel Spill) (Bldg. 772-F)	8.50E+00	1.9E-02	**2.50E+01**	<	5.0E-01
Spills (bounded by Sample Tunnel Spill) (Bldg. 772-1F)e	1.40E+00	9.45E-03	**2.50E+01**	<	7.72E-02
Plugs bounded by Sample Tunnel Spill (Bldg. 772-F)	2.00E+00	1.9E-02	**2.50E+01**	<	5.0E-01
Plugs (bounded by Sample Tunnel Spill) (Bldg. 772-1F)e	1.00E+00	9.45E-03	**2.50E+01**	<	7.72E-02
Drops/Falls (bounded by Sample Tunnel Spill) (Bldg. 772-F)	1.05E+01	1.9E-02	**2.50E+01**	<	5.0E-01
Drops/Falls (bounded by Sample Tunnel Spill) (Bldg. 772-1F)e	7.10E-01	9.45E-03	**2.50E+01**	<	7.72E-02
Uncontrolled Reaction in a glovebox (Building 772-F, one-fifth of facility inventory of Pu-238, 40 Ci, involved)f	2.47E-02	2.30E-01	**2.50E+01**	<	1.95E+00
Low-Energy Event (Building 772-F Service Floor)f	3.01E+00	6.83E-04	**2.50E+01**	<	5.58E-03
1.0E-04 < =F < 1.0E-02					
Uncontrolled Reaction in a glovebox (Building 772-F, full facility inventory of Pu-238, 200 Ci, involved)f	6.17E-03	6.08E-01	**2.50E+01**	<	5.13E+00
1.0E-06 < =F < 1.0E-04					
Drum Rupture (Bldg. 772-F, Service Floor)	1.31E-05	6.83E-04	**2.50E+01**	<	5.58E-03

Table 3.4-12 Evaluation Guideline Comparisons for Operational-Related Beyond Design Basis Accidents (Continued)

Accident	Frequency[a] (per year)	Consequence for the MOI (99.5% Met.) (rem)	Evaluation Guideline for the MOI (Ref. 3) (rem)	Consequence Comparison Against MOI Evaluation Guideline	Consequence for the OEP (640 meters)[b] (50% Met.) (rem)
F < 1.0E-06					
Criticality (Bldg. 772-F, Filtered Stack Release)	1.31E-07	6.15E-03	**None**	---	1.74E-01
Criticality (Bldg. 772-F, Unfiltered Ground Release)	1.31E-07	4.04E-02	**None**	---	5.97E-01
Criticality (Bldg. 772-1F, Filtered Stack Release)	2.12E-07	[c]			[c]
Criticality (Bldg. 772-1F, Unfiltered Ground Release)	2.12E-07	[d]			[d]
Criticality (High-Activity Drain Tanks, Unfiltered Ground Release)	4.06E-07	[d]			[d]

a These frequencies do not take into account the conditional probability of a total loss of HEPA filtration.

b OEP doses are less than the EGs for worker safety (Ref. 18).

c Consequence is bounded by the consequence of a filtered criticality in Building 772-F.

d Consequence is approximately the same as the consequence of an unfiltered criticality in Building 772-F.

e The consequences of this event are not recalculated with the revised inventory, because they are bounded by Sample Tunnel spill and the value is conservative.

f The consequences of this event are not recalculated for the reduced inventory. The consequences in the table are conservative.

g The consequences are calculated using MACCS and ICRP-68/72 DCFs. Onsite evaluation corresponds to 100 meters.

Table 3.4-13 Evaluation Guideline Comparison for Natural Phenomena Beyond Design Basis Accidents

Accident[c]	Exceedance Frequency (per year)	Consequence for the MOI (rem)	Evaluation Guideline for the MOI (rem)	Consequence Comparison Against MOI Evaluation Guideline	Consequence for the OEP[a] (640 meters) 50% Met. (rem)
Earthquake (Bldg. 772-F) (>0.2g)b	2.00E-04	1.15E+00	**2.50E+01**	<	9.41E+00
Earthquake and Fire (Bldg. 772-F) (>0.2g)b	4.00E-05	1.40E+00	**2.50E+01**	<	9.45E+00
Earthquake (Bldg. 772-4F) (>0.2g)	2.00E-04	1.04E-04	**2.50E+01**	<	8.52E-04
Wind (Bldg. 772-4F) (>84-mph)	2.00E-02	2.33E-04	**2.50E+01**	<	---
Tornado (Bldg. 772-F) (>137-mph)	2.00E-05	1.72E+01	**2.50E+01**	<	3.43E+01
Tornado (Bldg. 772-4F) (>84-mph)	1.30E-04	2.25E-03	**2.50E+01**	<	---

a OEP doses are less than the EGs for worker safety (Ref. 18).

b the consequences of this event are not recalculated with the revised inventory, because they are bounded by the consequences of the Tornado.

c Beyond DBA events were analyzed and reported for the Waste Container Staging Area in the previous revision of the DSA (Rev. 4). However, because the B-25 Staging Area is a Facility Hazard Category 3 simple storage area with low accident consequences, beyond DBEs are not included for this revision (Rev. 5) of Chapter 3.

APPENDIX 3A

HAZARD IDENTIFICATION TABLES

Table 3A-1 Hazard Energy Sources Relationship to Hazard and Event Categories

Hazard Energy Source Groups	Hazard Categories	Event Categories[a]
Radiation (Ionizing)	Radioactive Material Release	Loss of Containment and/or Loss of Confinement (E-3)
Fissile Material	Nuclear Criticality	Nuclear Criticality (E-6)
Ionizing radiation sources	Direct Radiological Exposure	Injury to Operators (direct radiological exposure of personnel) (E-4)
Electrical Thermal Friction Pyrophoric material Spontaneous combustion Open flame Flammables Combustibles	Fire (Radioactive material release contamination)	Fire (E-1) Loss of containment (contamination of workers)
Potential (pressure) Explosive gases	Explosion (Radioactive material release contamination)	Explosion (E-2) Loss of containment (contamination of workers)
Electrical Gravitational Potential (pressure) Kinetic Thermal	Industrial Hazards	Injury to Personnel (industrial accidents) (E-5)
Acoustical Non-ionizing Radiation Uncontrolled Chemical Reactions	Industrial Hygiene Hazards	Injury to Personnel (industrial hygiene accidents) (E-5)
Straight wind Tornado Earthquake Flood Lightning	Natural Phenomena (Radioactive material release contamination)	Natural Phenomena (E-8) Straight wind Tornado Earthquake Flood Lightning Loss of containment (contamination of workers)
Gravitational (aircraft) Kinetic Thermal Potential	External Hazards	External Events (E-7)

[a] Event categories are assigned an E-number for ease of data management (see Section 3.3.1.2).
NOTE: Table was reproduced from the Preliminary Hazard Analysis (Ref. 16).

Table 3A-2 Hazardous Material Sources Relationship to Hazard and Event Categories

Hazardous Material Group	Hazard Categories	Event Categories[a]
Asphyxiants Toxics Corrosives Carcinogens Oxidizers	Industrial Hygiene Hazards	Injury to Personnel (industrial hygiene accidents) (E-5)
Asphyxiants Toxics Corrosives Carcinogens Oxidizers	Hazardous Material Release	Loss of Containment (loss of confinement) (E-3)

[a] Event categories are assigned an E-number for ease of data management (see Section 3.3.1.2).
NOTE: Table was reproduced from the Preliminary Hazard Analysis (Ref. 16).

APPENDIX 3B

SUMMARY OF CONTROLS CREDITED IN HAZARDS TABLE

Table B-1 Summary of Controls Credited in Hazard Evaluation Tables

Event No.	Event Description	Safety Significant Control	Control Function
LAB1	**Fire**		
LAB1-1-007	Fire resulting in 772-F Glovebox being breeched with Full 772-F building inventory assumed.	• Area Emergency Plan	• Provides for evacuation of workers from the facility and relocates worker to a safe location in the event of a fire.
		• Radiological Protection Program	• Establishes controls to survey radiation areas, assure postings are maintained, and provide for personnel monitoring.
		• Radiological Inventory Control Program	• Bounding Facility and FSR Inventories available for release.
		• Building Design	• Provide passive boundary for release.
		• Main Exhaust Design	• Provide passive boundary for release.
		• Fire Protection Program	• Provide program elements to protect assumptions. (Detectors and alarms, combustible controls)
		• Site training	• Provides training for proper notification in response to a perceived fire.

Table B-1 Summary of Controls Credited in Hazard Evaluation Tables (continued)

Event No.	Event Description	Safety Significant Control	Control Function
LAB1	**Fire**		
LAB1-1-009	Earthquake followed by full facility fire	• Area Emergency Plan	• Provides for evacuation of workers from the facility and relocates worker to a safe location in the event of a fire.
		• Radiological Protection Program	• Establishes controls to survey radiation areas, assure postings are maintained, and provide for personnel monitoring.
		• Radiological Inventory Control Program	• Bounding Facility and FSR Inventories available for release.
		• Building Design	• Provide passive boundary for release.
		• Main Exhaust Design	• Provide passive boundary for release.
		• Fire Protection Program	• Provide program elements to protect assumptions. (combustible controls)

Table B-1 Summary of Controls Credited in Hazard Evaluation Tables (continued)

Event No.	Event Description	Safety Significant Control	Control Function
LAB1	**Fire**		
LAB1-1-001 Or LAB1-1-008	Fire resulting in 772-F Lab module and Full 772-F building inventory assumed.	• Area Emergency Plan	• Provides for evacuation of workers from the facility and relocates worker to a safe location in the event of a fire.
		• Radiological Protection Program	• Establishes controls to survey radiation areas, assure postings are maintained, and provide for personnel monitoring.
		• Radiological Inventory Control Program	• Bounding Facility and FSR Inventories available for release.
		• Fire Suppression System	• Provide active suppression of fires for MAR reduction.
		• Building Design	• Provide passive boundary for release.
		• Main Exhaust Design	• Provide passive boundary for release.
		• Fire Protection Program	• Provide program elements to protect assumptions. (Detectors and alarms, combustible controls)
		• Site training	• Provides training for proper notification in response to a perceived fire.

Table B-1 Summary of Controls Credited in Hazard Evaluation Tables (continued)

Event No.	Event Description	Safety Significant Control	Control Function
LAB1	**Explosion**		
LAB1-5	Explosion internal to a 772-F glovebox, glovebox breached. Ignition of flammable gas (propane, aerosols, VOCs, and H2). Rapid exothermic chemical reaction.	• Area Emergency Plan	• Provides for evacuation of workers from the facility and relocates worker to a safe location in the event of an explosion.
		• Radiological Protection Program	• Establishes controls to survey radiation areas, assure postings are maintained, and provide for personnel monitoring.
		• Radiological Inventory Control Program	• Bounding Inventory for glovebox with VOCs
		• Hydrogen Control	• Ensure segregation of hydrogen from VOCs to protect against an unanalyzed detonation
		• Chemical Control Program	• Prevents chemical events within the facility by identification of chemicals used during normal operations, identification of the hazards posed by the chemicals to facility workers, and by separation of reactive chemicals

Table B-1 Summary of Controls Credited in Hazard Evaluation Tables (Continued)

Event No	Event Description	Safety Significant Control	Control Function
LAB1	**Over-pressurization**		
LAB1-7	Rapid release of compressed gas or rapid chemical reaction results in over-pressurization of a glovebox or shielded cell and a subsequent radiological release. Full facility inventory assumed.	• Flow Orifice	• Limit flow on loss of pressure control. Protects the glovebox from being over-pressurized in the event of a supply gas pressure regulator failure.
		• Chemical Control Program	• Prevents chemical events within the facility by identification of chemicals used during normal operations, identification of the hazards posed by the chemicals to facility workers, and by separation of reactive chemicals.
		• Glovebox Structures	• This is a passive function provided by the glovebox structure. The gloveboxes are required to provide confinement of hazardous material under normal operating conditions and during low energy operational accident conditions.
		• Shielded Cell/Exhaust Structures	• This is a passive function provided by the cell, viewing window, ductwork from the shielded cells to the HEPA filter housings, and one stage of HEPA filtration. Maintains barrier during low energy operational accidents.
		• Glovebox Physical Confinement Barrier Testing	• Provides defense in depth for the glovebox structures by ensuring that the weakest components are checked before use each shift.
		• Radiological Protection Program	• Establishes controls to survey radiation areas, assure postings are maintained, and provide for personnel monitoring.
		• Radiological Inventory Control Program	• Bounding Facility Inventory available for release.
		• Area Emergency Plan	• Provides notification and appropriate actions.

Table B-1 Summary of Controls Credited in Hazard Evaluation Tables (Continued)

Event No	Event Description	Safety Significant Control	Control Function
LAB1	**Loss of Confinement**		
LAB1-14	Loss of Confinement of 772-F glovebox or shielded cell. Glove breach, structural breach, air reversal. Full facility inventory assumed.	• Glovebox Structure	• .This is a passive function provided by the glovebox structure. The gloveboxes are required to provide confinement of hazardous material under normal operating conditions and during low energy operational accident conditions.
		• Shielded Cell/Exhaust Structures	• This is a passive function provided by the cell, viewing window, ductwork from the shielded cells to the HEPA filter housings, and one stage of HEPA filtration. Maintains barrier during low energy operational accidents.
		• Glovebox Physical Confinement Barrier Testing	• Provides defense in depth for the glovebox structures by ensuring that the weakest components are checked before use each shift.
		• Radiological Protection Program	• Establishes controls to survey radiation areas, assure postings are maintained, and provide for personnel monitoring.
		• Radiological Inventory Control Program	• Bounding Facility Inventory available for release.
		• Area Emergency Plan	• Provides notification and appropriate actions.

Table B-1 Summary of Controls Credited in Hazard Evaluation Tables (Continued)

Event No	Event Description	Safety Significant Control	Control Function
LAB1	**Loss of Confinement (Continued)**		
LAB1-15	772-F Sample Tunnel spill. Dropped material. Sprayed/ejected material, crane/missile impact damages confinement or sample container. Full facility inventory assumed.	• Area Emergency Plan • Radiological Protection Program • Radiological Inventory Control Program	• Provides for evacuation of workers from the facility and relocates worker to a safe location in the event of a spill. • Establishes controls to survey radiation areas, assure postings are maintained, and provide for personnel monitoring. • Bounding Facility Inventory available for release.
LAB1-21	High Wind/Tornado damages/destroys 772-F releasing radiological material. Full facility inventory assumed.	• Building Design	• Building will withstand design Basis Wind Tornado preventing a radiological release.

Table B-1 Summary of Controls Credited in Hazard Evaluation Tables (Continued)

Event No	Event Description	Safety Significant Control	Control Function
LAB2	**Fire**		
LAB2-1-002a	Fire in 772-1F glovebox resulting in a radiological release. Full facility inventory involved.	• Area Emergency Plan	• Provides for evacuation of workers from the facility and relocates worker to a safe location in the event of a fire.
		• Radiological Protection Program	• Establishes controls to survey radiation areas, assure postings are maintained, and provide for personnel monitoring.
		• Radiological Inventory Control Program	• Bounding Facility and FSR Inventories available for release.
		• Fire Protection Program	• Provide program elements to protect assumptions. (Detectors and alarms, combustable controls)
		• Site training	• Provides training for proper notification in response to a perceived fire.

Table B-1 Summary of Controls Credited in Hazard Evaluation Tables (Continued)

Event No	Event Description	Safety Significant Control	Control Function
LAB2	**Fire**		
LAB2-1-005	Fire resulting in 772-F Lab module and Full 772-F building inventory assumed.	• Area Emergency Plan	• Provides for evacuation of workers from the facility and relocates worker to a safe location in the event of a fire.
		• Radiological Protection Program	• Establishes controls to survey radiation areas, assure postings are maintained, and provide for personnel monitoring.
		• Radiological Inventory Control Program	• Bounding Facility and FSR Inventories available for release.
		• Fire Suppression System	• Provide active suppression of fires for MAR reduction.
		• Fire Protection Program	• Provide program elements to protect assumptions. (Detector and alarms, combustible controls noncombustible construction of walls)
		• Site training	• Provides training for proper notification in response to a perceived fire.

Table B-1 Summary of Controls Credited in Hazard Evaluation Tables (Continued)

Event No	Event Description	Safety Significant Control	Control Function
LAB2	**Fire**		
LAB2-1-006	Fire resulting in multiple area or entire building	• Building Design	• Segmentation of B-25 and 772-1F inventories
		• Area Emergency Plan	• Provides for evacuation of workers from the facility and relocates worker to a safe location in the event of a fire.
		• Radiological Protection Program	• Establishes controls to survey radiation areas, assure postings are maintained, and provide for personnel monitoring.
		• Radiological Inventory Control Program	• Bounding Facility and FSR Inventories available for release.
		• Fire Suppression System	• Provide active suppression of fires for MAR reduction.
		• Fire Protection Program	• Provide program elements to protect assumptions. (Detector alarms, combustible controls noncombustible construction of walls)
		• Site training	• Provides training for proper notification in response to a perceived fire.

Table B-1 Summary of Controls Credited in Hazard Evaluation Tables (Continued)

Event No	Event Description	Safety Significant Control	Control Function
LAB2	**Fire**		
LAB2-1-007	Fire resulting in multiple area or entire building involved due to an earthquake	• Building Design	• Segmentation of B-25 and 772-1F inventories
		• Area Emergency Plan	• Provides for evacuation of workers from the facility and relocates worker to a safe location in the event of a fire.
		• Radiological Protection Program	• Establishes controls to survey radiation areas, assure postings are maintained, and provide for personnel monitoring.
		• Radiological Inventory Control Program	• Bounding Facility and FSR Inventories available for release.
		• Fire Protection Program	• Provide program elements to protect assumptions. (combustible controls)

Table B-1 Summary of Controls Credited in Hazard Evaluation Tables (Continued)

Event No	Event Description	Safety Significant Control	Control Function
LAB2	**Explosion**		
LAB2-6	Explosion inside a 772-1F glovebox. Full facility inventory assumed. .	• Area Emergency Plan • Radiological Protection Program • Radiological Inventory Control Program • Hydrogen Control • Chemical Control	• Provides for evacuation of workers from the facility and relocates worker to a safe location in the event of an explosion. • Establishes controls to survey radiation areas, assure postings are maintained, and provide for personnel monitoring. • Bounding Facility Inventory available for release. • Ensure segregation of hydrogen from VOCs to protect against an unanalyzed detonation. • Provides chemical handling and storage
LAB2-11	Explosion inside a 772-1F lab room gloveboxes / hoods caused by breech of propane gas cylinder with subsequent ignition. Full facility inventory assumed.	• Area Emergency Plan • Radiological Protection Program • Radiological Inventory Control Program • Propane Control Program	• Provides for evacuation of workers from the facility and relocates worker to a safe location in the event of an explosion. • Establishes controls to survey radiation areas, assure postings are maintained, and provide for personnel monitoring. • Bounding Facility Inventory available for release • Limit number of full propane cylinders per module to limit accident damage.

Table B-1 Summary of Controls Credited in Hazard Evaluation Tables (Continued)

Event No	Event Description	Safety Significant Control	Control Function
LAB2	**Explosion (Continued)**		
LAB2-12	772-1F duct contains vapor that flashes upon confinement event.	• Area Emergency Plan • Radiological Protection Program • Radiological Inventory Control Program	• Provides for evacuation of workers from the facility and relocates worker to a safe location in the event of an explosion. • Establishes controls to survey radiation areas, assure postings are maintained, and provide for personnel monitoring. • Bounding Inventory for glovebox with VOCs.
LAB2-6A DELETED		•	•

Table B-1 Summary of Controls Credited in Hazard Evaluation Tables (Continued)

Event No	Event Description	Safety Significant Control	Control Function
LAB2	**Overpressurization**		
LAB2-7	Rapid release of compressed gas results in over-pressurization of a glovebox and a subsequent radiological release. Full facility inventory assumed.	• Flow Orifice	• Limit flow on loss of pressure control. Protects the glovebox from being over-pressurized in the event of a supply gas pressure regulator failure.
		• Glovebox Structure	• Prevents chemical events within the facility by identification of chemicals used during normal operations, identification of the hazards posed by the chemicals to facility workers, and by separation of reactive chemicals.
		• Shielded Cell Structure	• This is a passive function provided by the glovebox structure. The gloveboxes are required to provide confinement of hazardous material under normal operating conditions and during low energy operational accident conditions.
		• Glovebox Physical Confinement Barrier Testing	• This is a passive function provided by cell and viewing window. Provides confinement of hazardous material.
		• Radiological Protection Program	• Provides defense in depth for the glovebox structures by ensuring that the weakest components are checked before use each shift. Establishes controls to survey radiation areas, assure postings are maintained, and provide for personnel monitoring.
		• Radiological Inventory Control Program	• Bounding Facility Inventory available for release.
		• Area Emergency Plan	• Notification and appropriate action

Table B-1 Summary of Controls Credited in Hazard Evaluation Tables (Continued)

Event No	Event Description	Safety Significant Control	Control Function
LAB2	**Loss of Confinement**		
LAB2-14	Loss of Confinement of 772-1F glovebox or shielded cell. Glove breach, structural breach, air reversal. Full facility inventory assumed.	• Glovebox Structure	• This is a passive function provided by the glovebox structure. The gloveboxes are required to provide confinement of hazardous material under normal operating conditions and during low energy operational accident conditions.
		• Shielded Cell Structure	• This is a passive function provided by cell and viewing window. Provides confinement of hazardous material
		• Glovebox Physical Confinement Barrier Testing	• Provides defense in depth for the glovebox structures by ensuring that the weakest components are checked before use each shift.
		• Radiological Protection Program	• Response to minimize exposure.
		• Radiological Inventory Control Program	• Bounding Facility Inventory available for release.
		• Area Emergency Plan	• Notification and appropriate action

Table B-1 Summary of Controls Credited in Hazard Evaluation Tables (Continued)

Event No	Event Description	Safety Significant Control	Control Function
LAB4	**NPH**		
LAB4-2	Earthquake damages/destroys 772-4F releasing radiological material. Full facility inventory assumed.	• Building Design • Filter housing and duct	• Building structural elements will withstand DBE (0.20 g PGA) to protect HEPA filter housings and ductwork from damage. • Resistant to 0.20 g PGA to prevent release of radiological material from 772-F.

Table B-1 Summary of Controls Credited in Hazard Evaluation Tables (Continued)

Event No	Event Description	Safety Significant Control	Control Function
LAB5	**Fire**		
LAB5-1	B-25 Pad full inventory fire.	• Area Emergency Plan • Radiological Protection Program • Radiological Inventory Control Program • Fire Protection Program	• Provides for evacuation of workers from the facility and relocates worker to a safe location in the event of a Fire. • Establishes controls to survey radiation areas, assure postings are maintained, and provide for personnel monitoring. • Bounding Facility Inventory available for release. • Fire preplan identifying wall between 772-1F and B-25 for fighting response.
LAB5	**Loss of Confinement**		
LAB5-3	Loss of Confinement B-25 Pad. Less than full inventory.	• Area Emergency Plan • Radiological Protection Program • Radiological Inventory Control Program	• Provides for evacuation of workers from the facility and relocates worker to a safe location in the event of a loss of confinement event. • Establishes controls to survey radiation areas, assure postings are maintained, and provide for personnel monitoring. • Bounding Facility Inventory available for release.

Table B-1 Summary of Controls Credited in Hazard Evaluation Tables (Continued)

Event No	Event Description	Safety Significant Control	Control Function
LAB5	**NPH**		
LAB5-4 OR LAB5-5	High wind / tornado destroys B-25 pad resulting in radiological release. OR Earthquake damages/destroys B-25 pad resulting in radiological release.	• Area Emergency Plan • Radiological Protection Program • Radiological Inventory Control Program	• Provides for evacuation of workers from the facility and relocates worker to a safe location in the event of a NPH event. • Establishes controls to survey radiation areas, assure postings are maintained, and provide for personnel monitoring. • Bounding Facility Inventory available for release.
ALL	**NPH**		
ALL1-1	Direct Radiological Exposure/contamination	• Shielded Cells • Radiological Protection Program	• The outer shell and viewing window provide radiation attenuation. • Establishes controls to survey radiation areas, assure postings are maintained, and provide for personnel monitoring.
All3-1	Nuclear criticality event occurs in a building.	• Nuclear Criticality Safety program • Interior Walls	• Implements criticality controls to maintain accident as BEU. • Provide passive separation for back-to-back glovebox configuration.
ALL4-1 OR ALL4-2	External impact, Vehicle crashes into building and release radiological material OR External Impact, Airplane/Helicopter crashes into buildings resulting in the release of radiological material	• Building Design	• 772-F provides a passive barrier for radiological release.

APPENDIX 3C

SUMMARY TABLE OF CONTROLS VERSES CHAP EVENTS

SUMMARY TABLE of Safety Significant SSCs and ACs

Systems Structures or Components (SS)	**Event Category**	**Applicable events**
Ventilation Systems (ME/shielded Cell 772-F)	Loss of Confinement , Over-pressurization, Explosion and NPH	LAB1-7, LAB1-14, LAB1-20, LAB1-1-001, LAB1-1-007, LAB1-1-008, LAB1-1-009
Glovebox	Loss of Confinement, Over-pressurization	LAB1-7, LAB1-14, LAB2-7, LAB2-14
Shielded Cells 772-F, 772-1F	Direct Exposure, Over-pressurization, Loss of Confinement	LAB2-7, LAB2-14, ALL1-1
Buildings 772-F	Fire, External, and NPH	LAB1-1-001, LAB1-1-007, LAB1-1-008, LAB1-1-009, LAB1-20, LAB1-21, ALL4-1, ALL4-2
Building 772-4F	NPH- (Earthquake)	LAB4-2
Building 772-1F (B-25 fire protect wall)	Fire and NPH	LAB2-1-006, LAB2-1-007
OGE-Exhaust Tunnel	NPH- (Earthquake)	LAB1-20
Flow orifice 772-F, 772-1F	Over-pressurization	LAB1-7, LAB2-7
Fire Suppression	Fire	LAB1-1-001, LAB1-1-008, LAB2-1-005, LAB2-1-006
Interior Walls	Criticality	ALL3-1

SUMMARY TABLE of Safety Significant SSCs and ACs (continued)

Administrative Controls (SS)	Event Category	Applicable events
Radiological Protection Program	Fire, Loss of Confinement, Over-pressurization, Explosion, NPH	LAB1-5, LAB1-7, LAB1-14, LAB1-15, LAB1-20, LAB2-6, LAB2-7, LAB2-11, LAB2-12, LAB2-14, LAB2-19, LAB5-1, LAB5-3, LAB5-4, LAB5-5, ALL1-1, LAB2-1, LAB-1-001, LAB-1-007, LAB1-1-008, LAB1-1-009, LAB2-1-002a, LAB2-1-007
Area Emergency Preparedness Program	Fire, Loss of Confinement, Over-pressurization, Explosion, NPH	LAB-1-001, LAB-1-007, LAB1-1-008, LAB1-1-009, LAB1-5, LAB1-14, LAB1-15, LAB1-20, LAB2-1-002a, LAB2-1-005, LAB2-1-006, LAB2-1-007,LAB2-6, LAB2-7, LAB2-11, LAB2-12, LAB2-14, LAB2-19,LAB5-1, LAB5-3, LAB5-4, LAB5-5
Radiological Inventory Control Program	Fire, Loss of Confinement, Over-pressurization, Explosion, NPH	LAB-1-001, LAB-1-007, LAB1-1-008, LAB1-1-009, LAB1-5 LAB1-7, LAB1-14, LAB1-15, LAB1-20, LAB2-1-002a, LAB2-1-005, LAB2-1-006, LAB2-1-007, LAB2-6, LAB2-7, LAB2-11, LAB2-12, LAB2-14, LAB2-19, LAB5-1, LAB5-3, LAB5-4, LAB5-5
Fire Protection Program	Fire and NPH	LAB-1-001, LAB-1-007, LAB1-1-008, LAB1-1-009, LAB2-1-002a, LAB2-1-003a, LAB2-1-005, LAB2-1-006, LAB2-1-007, LAB5-1
Chemical Control Program	Over-pressurization, Explosion	LAB1-5, LAB1-7, LAB2-6
Propane Control Program	Explosion	LAB2-11
Hydrogen Control program	Explosion	LAB1-5, LAB2-6,
Glovebox Physical Barrier Testing	Loss of Confinement, Over-pressurization	LAB1-7, LAB1-14, LAB2-7, LAB2-14
Critical Lift Program	External	LAB 3R-5
FSR – container control	Fire and NPH	LAB1-1-001, LAB1-1-007, LAB1-1-008, LAB1-1-009, LAB2-1-002a, LAB2-1-003a, LAB2-1-005, LAB2-1-006, LAB2-1-007
Training program	Fires	LAB1-1-001, LAB1-1-004, LAB1-1-007, LAB1-1-008, LAB2-1-002a, LAB2-1-003a, LAB2-1-005, LAB2-1-006,

APPENDIX 3D

BUILDING 772-F OPERATIONAL-RELATED DESIGN BASIS ACCIDENTS

Table 3D-1 Offsite Consequences Due to an Explosion, Building 772-F:

Radionuclide	Inventory (Ci)	Release Fraction	Filter Penetration Factor	Total Curies Released (Ci)	MACCS TEDE (stack) (rem)	Consequence (rem)
Pu-239 eq[a]	52 E+00	1.5 E-03	1	7.8 E-02	9.9 E-02	7.7 E-03

[a] This table is a representative selection of important isotopes found in Building 772-F converted to a Pu-239 dose equivalent (42 Ci alpha, 500 Ci Pu-241, 210 Ci beta/gamma (Sr-90) and 100 Ci tritium).

Table 3D-2 Onsite Consequences Due to an Explosion, Building 772-F:

Radionuclide	Inventory (Ci)	Release Fraction	Filter Penetration Factor	Total Curies Released (Ci)	MACCS TEDE (stack) (rem)	Consequence (rem)
Pu-239 eq[a]	52 E+00	1.5 E-03	1	7.8E-02	2.3. E+02	1.8 E+01

[a] This table is a representative selection of important isotopes found in Building 772-F converted to a Pu-239 dose equivalent (42 Ci alpha, 500 Ci Pu-241, 210 Ci beta/gamma (Sr-90) and 100 Ci tritium).

Table 3D-3 Source term for fires - Bldg 772-F

						Building	772-F
						Case	N/A
* MARs are calculated based on the material distributions and fractions listed on Sheet 2 of 2 (i.e., following sheet).						Sheet	1 of 2
							Airborne
			MAR*	DR	ARF x RF	LPF	ST
Radionuclide	Form	Release Mechanism	(Ci)	(fraction)	(fraction)	(fraction)	(Ci)
Pu-239	solid/non-FSR liq.	pressurized venting	295.00	1.00	2.00E-03	1.00	5.90E-01
		boiling	294.41	1.00	1.00E-03	1.00	2.94E-01
	solid/liq. residue	falling	294.41	1.00	6.00E-04	1.00	1.77E-01
		charring (inert)	294.41	0.95	6.00E-05	1.00	1.68E-02
		charring (plastic)	294.41	0.05	5.00E-02	1.00	7.36E-01
		debris falling on	294.41	1.00	2.00E-03	1.00	5.89E-01
		aerodynamic entrainment	294.41	1.00	9.60E-05	1.00	2.83E-02
	liquid	boiling	13.50	1.00	1.00E-03	1.00	1.35E-02
		[intentionally left blank]	0.00	1.00	1.00E+00	1.00	0.00E+00
		flashing spray release (50C-100C superheat)	15.00	1.00	7.00E-02	1.00	1.05E+00
		burning	0.10	1.00	1.00E-01	1.00	1.00E-02
		[intentionally left blank]	0.00	1.00	1.00E+00	1.00	0.00E+00
	liquid residue	falling	13.50	1.00	6.00E-04	1.00	8.10E-03
		charring (inert)	13.50	0.95	6.00E-05	1.00	7.70E-04
		charring (plastic)	13.50	0.05	5.00E-02	1.00	3.38E-02
		debris falling on	13.50	1.00	2.00E-03	1.00	2.70E-02
		aerodynamic entrainment	13.50	1.00	9.60E-05	1.00	1.30E-03
	SUBTOTAL						3.58E+00
Pu-241	solid/non-FSR liq.	pressurized venting	3542.00	1.00	2.00E-03	1.00	7.08E+00
		boiling	3534.92	1.00	1.00E-03	1.00	3.53E+00
	solid/liq. residue	falling	3534.92	1.00	6.00E-04	1.00	2.12E+00
		charring (inert)	3534.92	0.95	6.00E-05	1.00	2.01E-01
		charring (plastic)	3534.92	0.05	5.00E-02	1.00	8.84E+00
		debris falling on	3534.92	1.00	2.00E-03	1.00	7.07E+00
		aerodynamic entrainment	3534.92	1.00	9.60E-05	1.00	3.39E-01
	liquid	boiling	160.20	1.00	1.00E-03	1.00	1.60E-01
		[intentionally left blank]	0.00	1.00	1.00E+00	1.00	0.00E+00
		flashing spray release (50C-100C superheat)	178.00	1.00	7.00E-02	1.00	1.25E+01
		burning	2.00	1.00	1.00E-01	1.00	2.00E-01
		[intentionally left blank]	0.00	1.00	1.00E+00	1.00	0.00E+00
	liquid residue	falling	160.20	1.00	6.00E-04	1.00	9.61E-02
		charring (inert)	160.20	0.95	6.00E-05	1.00	9.13E-03
		charring (plastic)	160.20	0.05	5.00E-02	1.00	4.01E-01
		debris falling on	160.20	1.00	2.00E-03	1.00	3.20E-01
		aerodynamic entrainment	160.20	1.00	9.60E-05	1.00	1.54E-02
	SUBTOTAL						4.28E+01
Sr-90	solid/non-FSR liq.	pressurized venting	2525.00	1.00	2.00E-03	1.00	5.05E+00
		boiling	2519.95	1.00	1.00E-03	1.00	2.52E+00
	solid/liq. residue	falling	2519.95	1.00	6.00E-04	1.00	1.51E+00
		charring (inert)	2519.95	0.95	6.00E-05	1.00	1.44E-01
		charring (plastic)	2519.95	0.05	5.00E-02	1.00	6.30E+00
		debris falling on	2519.95	1.00	2.00E-03	1.00	5.04E+00
		aerodynamic entrainment	2519.95	1.00	9.60E-05	1.00	2.42E-01
	liquid	boiling	67.50	1.00	1.00E-03	1.00	6.75E-02
		[intentionally left blank]	0.00	1.00	1.00E+00	1.00	0.00E+00
		flashing spray release (50C-100C superheat)	75.00	1.00	7.00E-02	1.00	5.25E+00
		burning	1.00	1.00	1.00E-01	1.00	1.00E-01
		[intentionally left blank]	0.00	1.00	1.00E+00	1.00	0.00E+00
	liquid residue	falling	67.50	1.00	6.00E-04	1.00	4.05E-02
		charring (inert)	67.50	0.95	6.00E-05	1.00	3.85E-03
		charring (plastic)	67.50	0.05	5.00E-02	1.00	1.69E-01
		debris falling on	67.50	1.00	2.00E-03	1.00	1.35E-01
		aerodynamic entrainment	67.50	1.00	9.60E-05	1.00	6.48E-03
	SUBTOTAL						2.66E+01
H-3	gas	all	10570.00	1.00	1.00E+00	1.00	1.06E+04

Table 3D-4 Consequence for Fires - Bldg 772-F

						Building	772-F
						Case	N/A
Should secondary effects involving post-boiling residue be included? (1=yes, 0=no)					1.00	Sheet	2 of 2
Should pressurized venting be included for non-FSR inventory? (1=yes, 0=no)					1.00		
Fraction of FSR inventory that experiences boiling					1.00	These values indicate the state of inputs during the analysis. (Cells with dark borders represent inputs varied during analysis.)	
Fraction of FSR inventory that experiences flashing spray release (50C-100C superheat)					1.00		
Combustible liquid Pu-239 inventory multiplication factor					1.00		
Combustible liquid Pu-241 & Sr-90 inventory multiplication factor					1.00		
Damage Ratio (DR) for charring of non-FSR inventory residue on/under plastic					0.05		
Damage Ratio (DR) for charring of FSR inventory residue on/under plastic					0.05		
Should a surface roughness of 100 cm be used for offsite? (1=yes, 0=no)					1.00		
Should the X/Q from DOE-STD-1189 be used for onsite? (1=yes, 0=no)					1.00		
DOSE SUMMARY							
		Surface Roughness					
		100-cm SR		3-cm SR			
	Airborne						
	Source	MOI	MOI	100-meter	100-meter		
	Term**	UDF	Dose	UDF	Dose		
Radionuclide	(Ci)	(rem/Ci)	(rem)	(rem/Ci)	(rem)		
Pu-239	3.58E+00	4.58E-02	1.64E-01	1.16E+02	4.14E+02		
Pu-241	4.28E+01	8.18E-04	3.51E-02	2.10E+00	9.00E+01		
Sr-90	2.66E+01	1.43E-04	3.80E-03	2.79E-01	7.41E+00		
H-3	1.06E+04	2.92E-08	3.09E-04	9.78E-05	1.03E+00		
Total Dose			**0.20**		**513**		
* Fraction of FSR inventory that experiences boiling must equal 1 for all cases.							
** Airborne STs are calculated on Sheet 1 of 2 (i.e., previous table).							

Glovebox fire (onsite) 513 rem * LPF * EP factor = 52 rem where :
LPF (bldg) = 0.2
EP factor = 1hr /2 hr

Lab Module Fire (onsite) 513 rem *FS factor * LPF* EP factor = 13 rem
LPF (bldg) = 0.2
FS factor = 1/4
EP factor = 1hr /2 hr

Table 3D-5 Deleted

Table 3D-6 Deleted

Table 3D-7 Offsite Consequences Due to an Uncontrolled Reaction, 40 Ci Alpha in Building 772-F

Nuclide	Inventory (Ci)	Release Fraction	Filter Penetration Factor	Total Curies Released (Ci)	EDE AXAIR89Q (rem/Ci)	Consequence (rem)
SR-89	4.24E-02	2.00E-03	4.90E-05	4.16E-09	4.50E-05	1.87E-13
SR-90	4.05E-03	2.00E-03	4.90E-05	3.97E-10	1.58E-03	6.27E-13
Y-90	4.05E-03	2.00E-03	4.90E-05	3.97E-10	9.93E-06	3.94E-15
Y-91	6.50E-02	2.00E-03	4.90E-05	6.37E-09	5.36E-05	3.41E-13
ZR-95	6.50E-01	2.00E-03	4.90E-05	6.37E-08	2.34E-05	1.49E-12
NB-95	4.32E-02	2.00E-03	4.90E-05	4.23E-09	5.78E-06	2.44E-14
RU-103	3.52E-02	1.00E-02	4.90E-05	1.72E-08	9.69E-06	1.67E-13
RU-106	5.20E+02	1.00E-02	4.90E-05	2.55E-04	5.36E-04	1.37E-07
AG-110M	4.12E-03	2.00E-03	4.90E-05	4.04E-10	6.56E-05	2.65E-14
SN-123	5.56E-04	2.00E-03	4.90E-05	5.45E-11	3.65E-05	1.99E-15
SB-125	7.00E-04	2.00E-03	4.90E-05	6.86E-11	1.21E-05	8.30E-16
TE-127	1.06E-03	2.00E-03	4.90E-05	1.04E-10	3.42E-07	3.56E-17
TE-129	6.63E-04	2.00E-03	4.90E-05	6.50E-11	8.59E-08	5.58E-18
CS-134	7.08E-04	2.00E-03	4.90E-05	6.94E-11	5.78E-05	4.01E-15
CS-137	5.43E-03	2.00E-03	4.90E-05	5.32E-10	3.90E-05	2.07E-14
CE-141	2.09E-02	2.00E-03	4.90E-05	2.05E-09	1.04E-05	2.13E-14
CE-144	9.75E-02	2.00E-03	4.90E-05	9.56E-09	4.26E-04	4.07E-12
PR-144	9.75E-02	2.00E-03	4.90E-05	9.56E-09	1.89E-08	1.81E-16
PM-147	1.75E-02	2.00E-03	4.90E-05	1.72E-09	4.14E-05	7.12E-14
PM-148M	2.23E-04	2.00E-03	4.90E-05	2.19E-11	1.30E-05	2.85E-16
EU-155	3.09E-04	2.00E-03	4.90E-05	3.03E-11	4.75E-05	1.44E-15
U-234	8.07E-11	2.00E-03	4.90E-05	7.91E-18	1.58E-01	1.25E-18
U-235	1.29E-09	2.00E-03	4.90E-05	1.26E-16	1.46E-01	1.84E-17
U-236	1.29E-09	2.00E-03	4.90E-05	1.26E-16	1.46E-01	1.84E-17
U-238	1.19E-07	2.00E-03	4.90E-05	1.17E-14	1.46E-01	1.71E-15
NP-237	1.72E-09	2.00E-03	4.90E-05	1.69E-16	5.97E-01	1.01E-16
PU-238	0.00E+00	2.00E-03	4.90E-05	0.00E+00	5.60E-01	0.00E+00
PU-239	4.00E+01	2.00E-03	4.90E-05	3.92E-06	6.21E-01	2.43E-06
PU-240	0.00E+00	2.00E-03	4.90E-05	0.00E+00	6.21E-01	0.00E+00
PU-241	5.00E+02	2.00E-03	4.90E-05	4.90E-05	1.22E-02	5.98E-07
PU-242	0.00E+00	2.00E-03	4.90E-05	0.00E+00	5.85E-01	0.00E+00
TOTAL	1.06E+03			3.08E-04		3.17E-06

Table 3D-8 Onsite Consequences Due to an Uncontrolled Reaction, 40 Ci Alpha in Building 772-F

Nuclide	Inventory (Ci)	Release Fraction	Filter Penetration Factor	Total Curies Released (Ci)	EDE AXAIR89Q (rem/Ci)	Consequence (rem)
SR-89	4.24E-02	2.00E-03	4.90E-05	4.16E-09	5.91E-05	2.46E-13
SR-90	4.05E-03	2.00E-03	4.90E-05	3.97E-10	2.08E-03	8.26E-13
Y-90	4.05E-03	2.00E-03	4.90E-05	3.97E-10	1.31E-05	5.20E-15
Y-91	6.50E-02	2.00E-03	4.90E-05	6.37E-09	7.03E-05	4.48E-13
ZR-95	6.50E-01	2.00E-03	4.90E-05	6.37E-08	3.35E-05	2.13E-12
NB-95	4.32E-02	2.00E-03	4.90E-05	4.23E-09	1.05E-05	4.44E-14
RU-103	3.52E-02	1.00E-02	4.90E-05	1.72E-08	1.47E-05	2.53E-13
RU-106	5.20E+02	1.00E-02	4.90E-05	2.55E-04	7.03E-04	1.79E-07
AG-110M	4.12E-03	2.00E-03	4.90E-05	4.04E-10	9.65E-05	3.90E-14
SN-123	5.56E-04	2.00E-03	4.90E-05	5.45E-11	4.79E-05	2.61E-15
SB-125	7.00E-04	2.00E-03	4.90E-05	6.86E-11	1.76E-05	1.21E-15
TE-127	1.06E-03	2.00E-03	4.90E-05	1.04E-10	4.83E-07	5.02E-17
TE-129	6.63E-04	2.00E-03	4.90E-05	6.50E-11	3.55E-07	2.31E-17
CS-134	7.08E-04	2.00E-03	4.90E-05	6.94E-11	8.19E-05	5.68E-15
CS-137	5.43E-03	2.00E-03	4.90E-05	5.32E-10	5.11E-05	2.72E-14
CE-141	2.09E-02	2.00E-03	4.90E-05	2.05E-09	1.40E-05	2.87E-14
CE-144	9.75E-02	2.00E-03	4.90E-05	9.56E-09	5.59E-04	5.34E-12
PR-144	9.75E-02	2.00E-03	4.90E-05	9.56E-09	1.66E-07	1.59E-15
PM-147	1.75E-02	2.00E-03	4.90E-05	1.72E-09	5.43E-05	9.34E-14
PM-148M	2.23E-04	2.00E-03	4.90E-05	2.19E-11	2.48E-05	5.43E-16
EU-155	3.09E-04	2.00E-03	4.90E-05	3.03E-11	6.26E-05	1.90E-15
U-234	8.07E-11	2.00E-03	4.90E-05	7.91E-18	2.08E-01	1.65E-18
U-235	1.29E-09	2.00E-03	4.90E-05	1.26E-16	1.92E-01	2.42E-17
U-236	1.29E-09	2.00E-03	4.90E-05	1.26E-16	1.92E-01	2.42E-17
U-238	1.19E-07	2.00E-03	4.90E-05	1.17E-14	1.92E-01	2.25E-15
NP-237	1.72E-09	2.00E-03	4.90E-05	1.69E-16	7.83E-01	1.32E-16
PU-238	0.00E+00	2.00E-03	4.90E-05	0.00E+00	7.35E-01	0.00E+00
PU-239	4.00E+01	2.00E-03	4.90E-05	3.92E-06	8.14E-01	3.19E-06
PU-240	0.00E+00	2.00E-03	4.90E-05	0.00E+00	8.14E-01	0.00E+00
PU-241	5.00E+02	2.00E-03	4.90E-05	4.90E-05	1.60E-02	7.84E-07
PU-242	0.00E+00	2.00E-03	4.90E-05	0.00E+00	7.67E-01	0.00E+00
TOTAL	1.06E+03			3.08E-04		4.15E-06

Table 3D-9 Offsite Consequences Due to an Uncontrolled Reaction, 200 Ci Pu-238 in Building 772-F

Nuclide	Inventory (Ci)	Release Fraction	Filter Penetration Factor	Total Curies Released (Ci)	EDE AXAIR89Q (rem/Ci)	Consequence (rem)
SR-89	4.31E+00	2.00E-03	4.90E-05	4.22E-07	4.50E-05	1.90E-11
SR-90	9.02E-01	2.00E-03	4.90E-05	8.84E-08	1.58E-03	1.40E-10
Y-90	9.02E-01	2.00E-03	4.90E-05	8.84E-08	9.93E-06	8.78E-13
Y-91	8.24E+00	2.00E-03	4.90E-05	8.08E-07	5.36E-05	4.33E-11
ZR-95	1.61E+01	2.00E-03	4.90E-05	1.58E-06	2.34E-05	3.70E-11
NB-95	1.45E+01	2.00E-03	4.90E-05	1.42E-06	5.78E-06	8.21E-12
RU-103	7.84E+00	1.00E-02	4.90E-05	3.84E-06	9.69E-06	3.72E-11
RU-106	3.02E+01	1.00E-02	4.90E-05	1.48E-05	5.36E-04	7.93E-09
AG-110M	1.02E+00	2.00E-03	4.90E-05	1.00E-07	6.56E-05	6.56E-12
SN-123	1.73E-02	2.00E-03	4.90E-05	1.70E-09	3.65E-05	6.21E-14
SB-125	4.71E-01	2.00E-03	4.90E-05	4.62E-08	1.21E-05	5.59E-13
TE-127	5.88E-01	2.00E-03	4.90E-05	5.76E-08	3.42E-07	1.97E-14
TE-129	1.73E-02	2.00E-03	4.90E-05	1.70E-09	8.59E-08	1.46E-16
CS-134	6.28E-01	2.00E-03	4.90E-05	6.15E-08	5.78E-05	3.55E-12
CS-137	2.59E+00	2.00E-03	4.90E-05	2.54E-07	3.90E-05	9.91E-12
CE-141	2.82E+00	2.00E-03	4.90E-05	2.76E-07	1.04E-05	2.87E-12
CE-144	3.06E+01	2.00E-03	4.90E-05	3.00E-06	4.26E-04	1.28E-09
PR-144	3.06E+01	2.00E-03	4.90E-05	3.00E-06	1.89E-08	5.67E-14
PM-147	6.67E+00	2.00E-03	4.90E-05	6.54E-07	4.14E-05	2.71E-11
PM-148M	5.88E-01	2.00E-03	4.90E-05	5.76E-08	1.30E-05	7.49E-13
EU-155	1.80E-02	2.00E-03	4.90E-05	1.76E-09	4.75E-05	8.36E-14
U-234	3.80E-09	2.00E-03	4.90E-05	3.72E-16	1.58E-01	5.88E-17
U-235	5.10E-10	2.00E-03	4.90E-05	5.00E-17	1.46E-01	7.30E-18
U-236	4.71E-10	2.00E-03	4.90E-05	4.62E-17	1.46E-01	6.75E-18
U-238	1.33E-09	2.00E-03	4.90E-05	1.30E-16	1.46E-01	1.90E-17
NP-237	1.73E-02	2.00E-03	4.90E-05	1.70E-09	5.97E-01	1.01E-09
PU-238	2.00E+02	2.00E-03	4.90E-05	1.96E-05	5.60E-01	1.10E-05
PU-239	0.00E+00	2.00E-03	4.90E-05	0.00E+00	6.21E-01	0.00E+00
PU-240	0.00E+00	2.00E-03	4.90E-05	0.00E+00	6.21E-01	0.00E+00
PU-241	0.00E+00	2.00E-03	4.90E-05	0.00E+00	1.22E-02	0.00E+00
PU-242	0.00E+00	2.00E-03	4.90E-05	0.00E+00	5.85E-01	0.00E+00
AM-241	3.73E-03	2.00E-03	4.90E-05	3.66E-10	6.33E-01	2.32E-10
TOTAL	3.60E+02			5.02E-05		1.10E-05

Table 3D-10 Onsite Consequences Due to an Uncontrolled Reaction, 200 Ci Pu-238 in Building 772-F

Nuclide	Inventory (Ci)	Release Fraction	Filter Penetration Factor	Total Curies Released (Ci)	EDE AXAIR89Q (rem/Ci)	Consequence (rem)
SR-89	4.31E+00	2.00E-03	4.90E-05	4.22E-07	5.91E-05	2.49E-11
SR-90	9.02E-01	2.00E-03	4.90E-05	8.84E-08	2.08E-03	1.84E-10
Y-90	9.02E-01	2.00E-03	4.90E-05	8.84E-08	1.31E-05	1.16E-12
Y-91	8.24E+00	2.00E-03	4.90E-05	8.08E-07	7.03E-05	5.68E-11
ZR-95	1.61E+01	2.00E-03	4.90E-05	1.58E-06	3.35E-05	5.29E-11
NB-95	1.45E+01	2.00E-03	4.90E-05	1.42E-06	1.05E-05	1.49E-11
RU-103	7.84E+00	1.00E-02	4.90E-05	3.84E-06	1.47E-05	5.64E-11
RU-106	3.02E+01	1.00E-02	4.90E-05	1.48E-05	7.03E-04	1.04E-08
AG-110M	1.02E+00	2.00E-03	4.90E-05	1.00E-07	9.65E-05	9.65E-12
SN-123	1.73E-02	2.00E-03	4.90E-05	1.70E-09	4.79E-05	8.14E-14
SB-125	4.71E-01	2.00E-03	4.90E-05	4.62E-08	1.76E-05	8.13E-13
TE-127	5.88E-01	2.00E-03	4.90E-05	5.76E-08	4.83E-07	2.78E-14
TE-129	1.73E-02	2.00E-03	4.90E-05	1.70E-09	3.55E-07	6.04E-16
CS-134	6.28E-01	2.00E-03	4.90E-05	6.15E-08	8.19E-05	5.04E-12
CS-137	2.59E+00	2.00E-03	4.90E-05	2.54E-07	5.11E-05	1.30E-11
CE-141	2.82E+00	2.00E-03	4.90E-05	2.76E-07	1.40E-05	3.86E-12
CE-144	3.06E+01	2.00E-03	4.90E-05	3.00E-06	5.59E-04	1.68E-09
PR-144	3.06E+01	2.00E-03	4.90E-05	3.00E-06	1.66E-07	4.98E-13
PM-147	6.67E+00	2.00E-03	4.90E-05	6.54E-07	5.43E-05	3.55E-11
PM-148M	5.88E-01	2.00E-03	4.90E-05	5.76E-08	2.48E-05	1.43E-12
EU-155	1.80E-02	2.00E-03	4.90E-05	1.76E-09	6.26E-05	1.10E-13
U-234	3.80E-09	2.00E-03	4.90E-05	3.72E-16	2.08E-01	7.74E-17
U-235	5.10E-10	2.00E-03	4.90E-05	5.00E-17	1.92E-01	9.60E-18
U-236	4.71E-10	2.00E-03	4.90E-05	4.62E-17	1.92E-01	8.87E-18
U-238	1.33E-09	2.00E-03	4.90E-05	1.30E-16	1.92E-01	2.50E-17
NP-237	1.73E-02	2.00E-03	4.90E-05	1.70E-09	7.83E-01	1.33E-09
PU-238	2.00E+02	2.00E-03	4.90E-05	1.96E-05	7.35E-01	1.44E-05
PU-239	0.00E+00	2.00E-03	4.90E-05	0.00E+00	8.14E-01	0.00E+00
PU-240	0.00E+00	2.00E-03	4.90E-05	0.00E+00	8.14E-01	0.00E+00
PU-241	0.00E+00	2.00E-03	4.90E-05	0.00E+00	1.60E-02	0.00E+00
PU-242	0.00E+00	2.00E-03	4.90E-05	0.00E+00	7.67E-01	0.00E+00
AM-241	3.73E-03	2.00E-03	4.90E-05	3.66E-10	8.30E-01	3.04E-10
TOTAL	3.60E+02			5.02E-05		1.44E-05

Table 3D-11 Offsite Consequences Due to an Uncontrolled Reaction, 2,450 Ci H-3 in Building 772-F

Nuclide	Inventory (Ci)	Release Fraction	Filter Penetration Factor	Total Curies Released (Ci)	EDE AXAIR89Q (rem/Ci)	Consequence (rem)
H-3	2.45E+03	1.00E+00	1.00E+00	2.45E+03	1.16E-07	2.84E-04
NA-24	7.35E-01	2.00E-03	4.90E-05	7.20E-08	2.50E-06	1.80E-13
SR-91	2.94E-02	2.00E-03	4.90E-05	2.88E-09	1.90E-06	5.47E-15
SR-92	3.69E-02	2.00E-03	4.90E-05	3.62E-09	1.25E-06	4.53E-15
NP-237	2.21E-03	2.00E-03	4.90E-05	2.17E-10	5.97E-01	1.30E-10
CE-141	1.47E-03	2.00E-03	4.90E-05	1.44E-10	1.04E-05	1.50E-15
CE-143	3.69E-03	2.00E-03	4.90E-05	3.62E-10	3.97E-06	1.44E-15
TC-99	2.21E-02	2.00E-03	4.90E-05	2.17E-09	9.13E-06	1.98E-14
TOTAL	2.45E+03			2.45E+03		2.84E-04

Table 3D-12 Onsite Consequences Due to an Uncontrolled Reaction, 2,450 Ci H-3 in Building 772-F

Nuclide	Inventory (Ci)	Release Fraction	Filter Penetration Factor	Total Curies Released (Ci)	EDE AXAIR89Q (rem/Ci)	Consequence (rem)
H-3	2.45E+03	1.00E+00	1.00E+00	2.45E+03	1.52E-07	3.72E-04
NA-24	7.35E-01	2.00E-03	4.90E-05	7.20E-08	1.77E-05	1.27E-12
SR-91	2.94E-02	2.00E-03	4.90E-05	2.88E-09	5.18E-06	1.49E-14
SR-92	3.69E-02	2.00E-03	4.90E-05	3.62E-09	6.69E-06	2.42E-14
NP-237	2.21E-03	2.00E-03	4.90E-05	2.17E-10	7.83E-01	1.70E-10
CE-141	1.47E-03	2.00E-03	4.90E-05	1.44E-10	1.40E-05	2.02E-15
CE-143	3.69E-03	2.00E-03	4.90E-05	3.62E-10	6.34E-06	2.30E-15
TC-99	2.21E-02	2.00E-03	4.90E-05	2.17E-09	1.20E-05	2.60E-14
TOTAL	2.45E+03			2.45E+03		3.72E-04

Table 3D-13 Offsite Consequences Due to a Low Energy Event, 40 Ci Alpha in Building 772-F

Nuclide	Inventory (Ci)	Release Fraction	Filter Penetration Factor	Total Curies Released (Ci)	EDE AXAIR89Q (rem/Ci)	Consequence (rem)
SR-89	4.24E-02	1.00E-04	4.90E-05	2.08E-10	4.50E-05	9.36E-15
SR-90	4.05E-03	1.00E-04	4.90E-05	1.98E-11	1.58E-03	3.13E-14
Y-90	4.05E-03	1.00E-04	4.90E-05	1.98E-11	9.93E-06	1.97E-16
Y-91	6.50E-02	1.00E-04	4.90E-05	3.19E-10	5.36E-05	1.71E-14
ZR-95	6.50E-01	1.00E-04	4.90E-05	3.19E-09	2.34E-05	7.46E-14
NB-95	4.32E-02	1.00E-04	4.90E-05	2.12E-10	5.78E-06	1.23E-15
RU-103	3.52E-02	1.00E-02	4.90E-05	1.72E-08	9.69E-06	1.67E-13
RU-106	5.20E+02	1.00E-02	4.90E-05	2.55E-04	5.36E-04	1.37E-07
AG-110M	4.12E-03	1.00E-04	4.90E-05	2.02E-11	6.56E-05	1.33E-15
SN-123	5.56E-04	1.00E-04	4.90E-05	2.72E-12	3.65E-05	9.93E-17
SB-125	7.00E-04	1.00E-04	4.90E-05	3.43E-12	1.21E-05	4.15E-17
TE-127	1.06E-03	1.00E-04	4.90E-05	5.19E-12	3.42E-07	1.77E-18
TE-129	6.63E-04	1.00E-04	4.90E-05	3.25E-12	8.59E-08	2.79E-19
CS-134	7.08E-04	1.00E-04	4.90E-05	3.47E-12	5.78E-05	2.01E-16
CS-137	5.43E-03	1.00E-04	4.90E-05	2.66E-11	3.90E-05	1.04E-15
CE-141	2.09E-02	1.00E-04	4.90E-05	1.02E-10	1.04E-05	1.06E-15
CE-144	9.75E-02	1.00E-04	4.90E-05	4.78E-10	4.26E-04	2.04E-13
PR-144	9.75E-02	1.00E-04	4.90E-05	4.78E-10	1.89E-08	9.03E-18
PM-147	1.75E-02	1.00E-04	4.90E-05	8.58E-11	4.14E-05	3.55E-15
PM-148M	2.23E-04	1.00E-04	4.90E-05	1.09E-12	1.30E-05	1.42E-17
EU-155	3.09E-04	1.00E-04	4.90E-05	1.51E-12	4.75E-05	7.17E-17
U-234	8.07E-11	1.00E-04	4.90E-05	3.95E-19	1.58E-01	6.24E-20
U-235	1.29E-09	1.00E-04	4.90E-05	6.32E-18	1.46E-01	9.23E-19
U-236	1.29E-09	1.00E-04	4.90E-05	6.32E-18	1.46E-01	9.23E-19
U-238	1.19E-07	1.00E-04	4.90E-05	5.83E-16	1.46E-01	8.51E-17
NP-237	1.72E-09	1.00E-04	4.90E-05	8.43E-18	5.97E-01	5.03E-18
PU-238	0.00E+00	1.00E-04	4.90E-05	0.00E+00	5.60E-01	0.00E+00
PU-239	4.00E+01	1.00E-04	4.90E-05	1.96E-07	6.21E-01	1.22E-07
PU-240	0.00E+00	1.00E-04	4.90E-05	0.00E+00	6.21E-01	0.00E+00
PU-241	5.00E+02	1.00E-04	4.90E-05	2.45E-06	1.22E-02	2.99E-08
PU-242	0.00E+00	1.00E-04	4.90E-05	0.00E+00	5.85E-01	0.00E+00
TOTAL	1.06E+03			2.58E-04		2.89E-07

Table 3D-14 Onsite Consequences Due to a Low Energy Event, 40 Ci Alpha in Building 772-F

Nuclide	Inventory (Ci)	Release Fraction	Filter Penetration Factor	Total Curies Released (Ci)	EDE AXAIR89Q (rem/Ci)	Consequence (rem)
SR-89	4.24E-02	1.00E-04	4.90E-05	2.08E-10	5.91E-05	1.23E-14
SR-90	4.05E-03	1.00E-04	4.90E-05	1.98E-11	2.08E-03	4.12E-14
Y-90	4.05E-03	1.00E-04	4.90E-05	1.98E-11	1.31E-05	2.59E-16
Y-91	6.50E-02	1.00E-04	4.90E-05	3.19E-10	7.03E-05	2.24E-14
ZR-95	6.50E-01	1.00E-04	4.90E-05	3.19E-09	3.35E-05	1.07E-13
NB-95	4.32E-02	1.00E-04	4.90E-05	2.12E-10	1.05E-05	2.23E-15
RU-103	3.52E-02	1.00E-02	4.90E-05	1.72E-08	1.47E-05	2.53E-13
RU-106	5.20E+02	1.00E-02	4.90E-05	2.55E-04	7.03E-04	1.79E-07
AG-110M	4.12E-03	1.00E-04	4.90E-05	2.02E-11	9.65E-05	1.95E-15
SN-123	5.56E-04	1.00E-04	4.90E-05	2.72E-12	4.79E-05	1.30E-16
SB-125	7.00E-04	1.00E-04	4.90E-05	3.43E-12	1.76E-05	6.04E-17
TE-127	1.06E-03	1.00E-04	4.90E-05	5.19E-12	4.83E-07	2.51E-18
TE-129	6.63E-04	1.00E-04	4.90E-05	3.25E-12	3.55E-07	1.15E-18
CS-134	7.08E-04	1.00E-04	4.90E-05	3.47E-12	8.19E-05	2.84E-16
CS-137	5.43E-03	1.00E-04	4.90E-05	2.66E-11	5.11E-05	1.36E-15
CE-141	2.09E-02	1.00E-04	4.90E-05	1.02E-10	1.40E-05	1.43E-15
CE-144	9.75E-02	1.00E-04	4.90E-05	4.78E-10	5.59E-04	2.67E-13
PR-144	9.75E-02	1.00E-04	4.90E-05	4.78E-10	1.66E-07	7.93E-17
PM-147	1.75E-02	1.00E-04	4.90E-05	8.58E-11	5.43E-05	4.66E-15
PM-148M	2.23E-04	1.00E-04	4.90E-05	1.09E-12	2.48E-05	2.70E-17
EU-155	3.09E-04	1.00E-04	4.90E-05	1.51E-12	6.26E-05	9.45E-17
U-234	8.07E-11	1.00E-04	4.90E-05	3.95E-19	2.08E-01	8.22E-20
U-235	1.29E-09	1.00E-04	4.90E-05	6.32E-18	1.92E-01	1.21E-18
U-236	1.29E-09	1.00E-04	4.90E-05	6.32E-18	1.92E-01	1.21E-18
U-238	1.19E-07	1.00E-04	4.90E-05	5.83E-16	1.92E-01	1.12E-16
NP-237	1.72E-09	1.00E-04	4.90E-05	8.43E-18	7.83E-01	6.60E-18
PU-238	0.00E+00	1.00E-04	4.90E-05	0.00E+00	7.35E-01	0.00E+00
PU-239	4.00E+01	1.00E-04	4.90E-05	1.96E-07	8.14E-01	1.60E-07
PU-240	0.00E+00	1.00E-04	4.90E-05	0.00E+00	8.14E-01	0.00E+00
PU-241	5.00E+02	1.00E-04	4.90E-05	2.45E-06	1.60E-02	3.92E-08
PU-242	0.00E+00	1.00E-04	4.90E-05	0.00E+00	7.67E-01	0.00E+00
TOTAL	1.06E+03			2.58E-04		3.78E-07

Table 3D-15 Offsite Consequences Due to a Low Energy Event, 200 Ci Pu-238 in Building 772-F

Nuclide	Inventory (Ci)	Release Fraction	Filter Penetration Factor	Total Curies Released (Ci)	EDE AXAIR89Q (rem/Ci)	Consequence (rem)
SR-89	4.31E+00	1.00E-04	4.90E-05	2.11E-08	4.50E-05	9.50E-13
SR-90	9.02E-01	1.00E-04	4.90E-05	4.42E-09	1.58E-03	6.98E-12
Y-90	9.02E-01	1.00E-04	4.90E-05	4.42E-09	9.93E-06	4.39E-14
Y-91	8.24E+00	1.00E-04	4.90E-05	4.04E-08	5.36E-05	2.17E-12
ZR-95	1.61E+01	1.00E-04	4.90E-05	7.89E-08	2.34E-05	1.85E-12
NB-95	1.45E+01	1.00E-04	4.90E-05	7.11E-08	5.78E-06	4.11E-13
RU-103	7.84E+00	1.00E-02	4.90E-05	3.84E-06	9.69E-06	3.72E-11
RU-106	3.02E+01	1.00E-02	4.90E-05	1.48E-05	5.36E-04	7.93E-09
AG-110M	1.02E+00	1.00E-04	4.90E-05	5.00E-09	6.56E-05	3.28E-13
SN-123	1.73E-02	1.00E-04	4.90E-05	8.48E-11	3.65E-05	3.10E-15
SB-125	4.71E-01	1.00E-04	4.90E-05	2.31E-09	1.21E-05	2.80E-14
TE-127	5.88E-01	1.00E-04	4.90E-05	2.88E-09	3.42E-07	9.85E-16
TE-129	1.73E-02	1.00E-04	4.90E-05	8.48E-11	8.59E-08	7.28E-18
CS-134	6.28E-01	1.00E-04	4.90E-05	3.08E-09	5.78E-05	1.78E-13
CS-137	2.59E+00	1.00E-04	4.90E-05	1.27E-08	3.90E-05	4.95E-13
CE-141	2.82E+00	1.00E-04	4.90E-05	1.38E-08	1.04E-05	1.44E-13
CE-144	3.06E+01	1.00E-04	4.90E-05	1.50E-07	4.26E-04	6.39E-11
PR-144	3.06E+01	1.00E-04	4.90E-05	1.50E-07	1.89E-08	2.84E-15
PM-147	6.67E+00	1.00E-04	4.90E-05	3.27E-08	4.14E-05	1.35E-12
PM-148M	5.88E-01	1.00E-04	4.90E-05	2.88E-09	1.30E-05	3.74E-14
EU-154	1.80E-02	1.00E-04	4.90E-05	8.82E-11	4.75E-05	4.19E-15
U-234	3.80E-09	1.00E-04	4.90E-05	1.86E-17	1.58E-01	2.94E-18
U-235	5.10E-10	1.00E-04	4.90E-05	2.50E-18	1.46E-01	3.65E-19
U-236	4.71E-10	1.00E-04	4.90E-05	2.31E-18	1.46E-01	3.37E-19
U-238	1.33E-09	1.00E-04	4.90E-05	6.52E-18	1.46E-01	9.52E-19
NP-237	1.73E-02	1.00E-04	4.90E-05	8.48E-11	5.97E-01	5.06E-11
PU-238	2.00E+02	1.00E-04	4.90E-05	9.80E-07	5.60E-01	5.49E-07
PU-239	0.00E+00	1.00E-04	4.90E-05	0.00E+00	6.21E-01	0.00E+00
PU-240	0.00E+00	1.00E-04	4.90E-05	0.00E+00	6.21E-01	0.00E+00
PU-241	0.00E+00	1.00E-04	4.90E-05	0.00E+00	1.22E-02	0.00E+00
PU-242	0.00E+00	1.00E-04	4.90E-05	0.00E+00	5.85E-01	0.00E+00
AM-241	3.73E-03	1.00E-04	4.90E-05	1.83E-11	6.33E-01	1.16E-11
TOTAL	3.60E+02			2.02E-05		5.57E-07

Table 3D-16 Onsite Consequences Due to a Low Energy Event, 200 Ci Pu-238 in Building 772-F

Nuclide	Inventory (Ci)	Release Fraction	Filter Penetration Factor	Total Curies Released (Ci)	EDE AXAIR89Q (rem/Ci)	Consequence (rem)
SR-89	4.31E+00	1.00E-04	4.90E-05	2.11E-08	5.91E-05	1.25E-12
SR-90	9.02E-01	1.00E-04	4.90E-05	4.42E-09	2.08E-03	9.19E-12
Y-90	9.02E-01	1.00E-04	4.90E-05	4.42E-09	1.31E-05	5.79E-14
Y-91	8.24E+00	1.00E-04	4.90E-05	4.04E-08	7.03E-05	2.84E-12
ZR-95	1.61E+01	1.00E-04	4.90E-05	7.89E-08	3.35E-05	2.64E-12
NB-95	1.45E+01	1.00E-04	4.90E-05	7.11E-08	1.05E-05	7.47E-13
RU-103	7.84E+00	1.00E-02	4.90E-05	3.84E-06	1.47E-05	5.64E-11
RU-106	3.02E+01	1.00E-02	4.90E-05	1.48E-05	7.03E-04	1.04E-08
AG-110M	1.02E+00	1.00E-04	4.90E-05	5.00E-09	9.65E-05	4.83E-13
SN-123	1.73E-02	1.00E-04	4.90E-05	8.48E-11	4.79E-05	4.06E-15
SB-125	4.71E-01	1.00E-04	4.90E-05	2.31E-09	1.76E-05	4.07E-14
TE-127	5.88E-01	1.00E-04	4.90E-05	2.88E-09	4.83E-07	1.39E-15
TE-129	1.73E-02	1.00E-04	4.90E-05	8.48E-11	3.55E-07	3.01E-17
CS-134	6.28E-01	1.00E-04	4.90E-05	3.08E-09	8.19E-05	2.52E-13
CS-137	2.59E+00	1.00E-04	4.90E-05	1.27E-08	5.11E-05	6.49E-13
CE-141	2.82E+00	1.00E-04	4.90E-05	1.38E-08	1.40E-05	1.93E-13
CE-144	3.06E+01	1.00E-04	4.90E-05	1.50E-07	5.59E-04	8.39E-11
PR-144	3.06E+01	1.00E-04	4.90E-05	1.50E-07	1.66E-07	2.49E-14
PM-147	6.67E+00	1.00E-04	4.90E-05	3.27E-08	5.43E-05	1.78E-12
PM-148M	5.88E-01	1.00E-04	4.90E-05	2.88E-09	2.48E-05	7.14E-14
EU-154	1.80E-02	1.00E-04	4.90E-05	8.82E-11	6.26E-05	5.52E-15
U-234	3.80E-09	1.00E-04	4.90E-05	1.86E-17	2.08E-01	3.87E-18
U-235	5.10E-10	1.00E-04	4.90E-05	2.50E-18	1.92E-01	4.80E-19
U-236	4.71E-10	1.00E-04	4.90E-05	2.31E-18	1.92E-01	4.44E-19
U-238	1.33E-09	1.00E-04	4.90E-05	6.52E-18	1.92E-01	1.25E-18
NP-237	1.73E-02	1.00E-04	4.90E-05	8.48E-11	7.83E-01	6.64E-11
PU-238	2.00E+02	1.00E-04	4.90E-05	9.80E-07	7.35E-01	7.20E-07
PU-239	0.00E+00	1.00E-04	4.90E-05	0.00E+00	8.14E-01	0.00E+00
PU-240	0.00E+00	1.00E-04	4.90E-05	0.00E+00	8.14E-01	0.00E+00
PU-241	0.00E+00	1.00E-04	4.90E-05	0.00E+00	1.60E-02	0.00E+00
PU-242	0.00E+00	1.00E-04	4.90E-05	0.00E+00	7.67E-01	0.00E+00
AM-241	3.73E-03	1.00E-04	4.90E-05	1.83E-11	8.30E-01	1.52E-11
TOTAL	3.60E+02			2.02E-05		7.31E-07

Table 3D-17 Offsite Consequences Due to a Low Energy Event, 2,450 Ci H-3 in Building 772-F

Nuclide	Inventory (Ci)	Release Fraction	Filter Penetration Factor	Total Curies Released (Ci)	EDE AXAIR89Q (rem/Ci)	Consequence (rem)
H-3	2.45E+03	1.00E+00	1.00E+00	2.45E+03	1.16E-07	2.84E-04
NA-24	7.38E-01	1.00E-04	4.90E-05	3.62E-09	2.50E-06	9.05E-15
SR-91	2.94E-02	1.00E-04	4.90E-05	1.44E-10	1.90E-06	2.74E-16
SR-92	3.68E-02	1.00E-04	4.90E-05	1.80E-10	1.25E-06	2.25E-16
NP-237	2.21E-02	1.00E-04	4.90E-05	1.08E-10	5.97E-01	6.45E-11
CE-141	1.47E-03	1.00E-04	4.90E-05	7.20E-12	1.04E-05	7.49E-17
CE-143	3.68E-03	1.00E-04	4.90E-05	1.80E-11	3.97E-06	7.15E-17
TC-99	2.21E-02	1.00E-04	4.90E-05	1.08E-10	9.13E-06	9.86E-16
TOTAL				2.45E+03		2.84E-04

Table 3D-18 Onsite Consequences Due to a Low Energy Event, 2,450 Ci H-3 in Building 772-F

Nuclide	Inventory (Ci)	Release Fraction	Filter Penetration Factor	Total Curies Released (Ci)	EDE AXAIR89Q (rem/Ci)	Consequence (rem)
H-3	2.45E+03	1.00E+00	1.00E+00	2.45E+03	1.52E-07	3.72E-04
NA-24	7.38E-01	1.00E-04	4.90E-05	3.62E-09	1.77E-05	6.41E-14
SR-91	2.94E-02	1.00E-04	4.90E-05	1.44E-10	5.18E-06	7.46E-16
SR-92	3.68E-02	1.00E-04	4.90E-05	1.80E-10	6.69E-06	1.20E-15
NP-237	2.21E-02	1.00E-04	4.90E-05	1.08E-10	7.83E-01	8.46E-11
CE-141	1.47E-03	1.00E-04	4.90E-05	7.20E-12	1.40E-05	1.01E-16
CE-143	3.68E-03	1.00E-04	4.90E-05	1.80E-11	6.34E-06	1.14E-16
TC-99	2.21E-02	1.00E-04	4.90E-05	1.08E-10	1.20E-05	1.30E-15
TOTAL				2.45E+03		3.72E-04

Table 3D-19 Offsite Consequences Due to a Low Energy Event on Service Floor of Building 772-F

Nuclide	Inventory (Ci)	Release Fraction	Filter Penetration Factor	Total Curies Released (Ci)	EDE AXAIR89Q (rem/Ci)	Consequence (rem)
H-3	2.71E+03	1.00E+00	1.00E+00	2.71E+03	1.29E-07	3.49E-04
NA-24	8.16E-01	1.00E-04	4.90E-03	4.00E-07	2.72E-06	1.09E-12
SR-91	3.21E-02	1.00E-04	4.90E-03	1.57E-08	2.10E-06	3.30E-14
SR-92	4.07E-02	1.00E-04	4.90E-03	1.99E-08	1.38E-06	2.75E-14
NP-237	2.44E-02	1.00E-04	4.90E-03	1.20E-08	6.63E-01	7.93E-09
CE-141	1.63E-03	1.00E-04	4.90E-03	7.97E-10	1.15E-05	9.16E-15
CE-143	4.07E-03	1.00E-04	4.90E-03	1.99E-09	4.41E-06	8.80E-15
TC-99	2.43E-02	1.00E-04	4.90E-03	1.19E-08	1.01E-05	1.20E-13
TOTAL				2.71E+03		3.49E-04

Table 3D-20 Onsite Consequences Due to a Low Energy Event on Service Floor of Building 772-F

Nuclide	Inventory (Ci)	Release Fraction	Filter Penetration Factor	Total Curies Released (Ci)	EDE AXAIR89Q (rem/Ci)	Consequence (rem)
H-3	2.71E+03	1.00E+00	1.00E+00	2.71E+03	1.60E-07	4.33E-04
NA-24	8.16E-01	1.00E-04	4.90E-03	4.00E-07	9.52E-06	3.81E-12
SR-91	3.21E-02	1.00E-04	4.90E-03	1.57E-08	3.81E-06	5.99E-14
SR-92	4.07E-02	1.00E-04	4.90E-03	1.99E-08	4.00E-06	7.98E-14
NP-237	2.44E-02	1.00E-04	4.90E-03	1.20E-08	8.26E-01	9.88E-09
CE-141	1.63E-03	1.00E-04	4.90E-03	7.97E-10	1.45E-05	1.16E-14
CE-143	4.07E-03	1.00E-04	4.90E-03	1.99E-09	6.00E-06	1.20E-14
TC-99	2.43E-02	1.00E-04	4.90E-03	1.19E-08	1.26E-05	1.50E-13
TOTAL				2.71E+03		4.33E-04

Table 3D-21 Releases Due to a Sample Tunnel Spill

SAMPLE TUNNEL SPILL – BOUNDING ESTIMATE

SITUATION	MAR (Ci)	DR	ARF	RF	LPF	AMOUNT AIRBORNE (CI)
AM-241						
LIQUID						
BOILING	0.00E+00	1.00E+00	1.00E-03	1.00E+00	2.00E-01	0
BURNING	0.00E+00	1.00E+00	1.00E-02	1.00E+00	2.00E-01	0
FALLING	3.10E+02	1.00E+00	1.00E-04	1.00E+00	1.00E+00	0.031
RESIDUE						
FALLING	0.00E+00	0.00E+00	3.00E-04	1.00E-05	2.00E-01	0
CHARRING INERT	0	1	2.00E-04	1.00E-05	0.2	0
CHARRING PLASTIC	0.00E+00	0.05	3.60E-02	1.00E-05	2.00E-01	0
DEBRIS FALLING ON	0	1	4.00E-04	1.00E-05	0.2	0
RESUSPENSION	0	1	9.60E-06	1	0.2	0
TOTAL AM-241						0.031
PU-241						
LIQUID						
BOILING	0.00E+00	1.00E+00	1.00E-03	1.00E+00	2.00E-01	0
BURNING	0.00E+00	1.00E+00	1.00E-02	1.00E+00	2.00E-01	0
FALLING	3.72E+03	1.00E+00	1.00E-04	1.00E+00	1.00E+00	0.372
RESIDUE						
FALLING	0.00E+00	0.00E+00	3.00E-04	1.00E-05	2.00E-01	0
CHARRING INERT	0.00E+00	1.00E+00	2.00E-04	1.00E-05	2.00E-01	0
CHARRING PLASTIC	0.00E+00	5.00E-02	3.60E-02	1.00E-05	2.00E-01	0
DEBRIS FALLING ON	0	1.00E+00	4.00E-04	1.00E-05	2.00E-01	0
RESUSPENSION	0.00E+00	1.00E+00	9.60E-06	1.00E+00	2.00E-01	0
TOTAL PU-241						0.372
RU-106						
LIQUID						
BOILING	0	1.00E+00	1.00E-03	1.00E+00	2.00E-01	0
BURNING	0	1.00E+00	1.00E-02	1.00E+00	2.00E-01	0
FALLING	2600	1.00E+00	1.00E-02	1.00E+00	1.00E+00	26
RESIDUE	0					
FALLING	0	0.00E+00	3.00E-04	1.00E-05	2.00E-01	0
CHARRING INERT	0	1.00E+00	2.00E-04	1.00E-05	2.00E-01	0
CHARRING PLASTIC	0	5.00E-02	3.60E-02	1.00E-05	2.00E-01	0
DEBRIS FALLING ON	0	1.00E+00	4.00E-04	1.00E-05	2.00E-01	0
RESUSPENSION	0	1.00E+00	9.60E-06	1.00E+00	2.00E-01	0
TOTAL RU-106						26
TOTAL H-3 (WATER)	2450	1.00E+00	1.00E+00	1.00E+00	1.00E+00	2450

Table 3D-22 Offsite and Onsite Consequences Due to a Sample Tunnel Spill (Ref. 24)

Sample Tunnel Spill	Maximum Dose (rem)
Onsite OEP at 100 m	9.29E+00
MOI (9.4 km)	7.08E-03

APPENDIX 3E

BUILDING 772-1F OPERATIONAL-RELATED DESIGN BASIS ACCIDENTS

Table 3E-1 Offsite Consequences Due to a Deflagration, Building 772-1F:

Radionuclide	Inventory (Ci)	Release Fraction	Filter Penetration Factor	Total Curies Released (Ci)	MACCS TEDE (ground) (rem)	Consequence (rem)
Pu-239 eq[a]	52 E+00	1.5 E-03	1	7.8 E-02	9.9 E-02	7.7 E-03

[a] This table is a representative selection of important isotopes converted to a Pu-239 dose equivalent (42 Ci alpha, 500 Ci Pu-241, 210 Ci beta/gamma (Sr-90) and 100 Ci tritium).

Table 3E-2 Onsite Consequences Due to a Deflagration, Building 772-1F:

Radionuclide	Inventory (Ci)	Release Fraction	Filter Penetration Factor	Total Curies Released (Ci)	MACCS TEDE (ground) (rem)	Consequence (rem)
Pu-239 eq[a]	52 E+00	1.5 E-03	1	7.8 E-02	2.32 E+02	1.8 E+01

[a] This table is a representative selection of important isotopes converted to a Pu-239 dose equivalent (42 Ci alpha, 500 Ci Pu-241, 210 Ci beta/gamma (Sr-90) and 100 Ci tritium).

Table 3E-3 Source Term for Fires - Bldg 772-1F

						Building	772-1F
						Case	N/A
* MARs are calculated based on the material distributions and fractions listed on Sheet 2 of 2 (i.e., following sheet).						Sheet	1 of 2
							Airborne
			MAR*	DR	ARF x RF	LPF	ST
Radionuclide	Form	Release Mechanism	(Ci)	(fraction)	(fraction)	(fraction)	(Ci)
Pu-239	solid/non-FSR liq.	pressurized venting	32.00	1.00	2.00E-03	1.00	6.40E-02
		boiling	31.94	1.00	1.00E-03	1.00	3.19E-02
	solid/liq. residue	falling	31.94	1.00	6.00E-04	1.00	1.92E-02
		charring (inert)	31.94	0.95	6.00E-05	1.00	1.82E-03
		charring (plastic)	31.94	0.05	5.00E-02	1.00	7.98E-02
		debris falling on	31.94	1.00	2.00E-03	1.00	6.39E-02
		aerodynamic entrainment	31.94	1.00	9.60E-05	1.00	3.07E-03
	liquid	boiling	9.00	1.00	1.00E-03	1.00	9.00E-03
		[intentionally left blank]	0.00	1.00	1.00E+00	1.00	0.00E+00
		flashing spray release (50C-100C superheat)	10.00	1.00	7.00E-02	1.00	7.00E-01
		burning	0.10	1.00	1.00E-01	1.00	1.00E-02
		[intentionally left blank]	0.00	1.00	1.00E+00	1.00	0.00E+00
	liquid residue	falling	9.00	1.00	6.00E-04	1.00	5.40E-03
		charring (inert)	9.00	0.95	6.00E-05	1.00	5.13E-04
		charring (plastic)	9.00	0.05	5.00E-02	1.00	2.25E-02
		debris falling on	9.00	1.00	2.00E-03	1.00	1.80E-02
		aerodynamic entrainment	9.00	1.00	9.60E-05	1.00	8.64E-04
	SUBTOTAL						1.03E+00
Pu-241	solid/non-FSR liq.	pressurized venting	381.00	1.00	2.00E-03	1.00	7.62E-01
		boiling	380.24	1.00	1.00E-03	1.00	3.80E-01
	solid/liq. residue	falling	380.24	1.00	6.00E-04	1.00	2.28E-01
		charring (inert)	380.24	0.95	6.00E-05	1.00	2.17E-02
		charring (plastic)	380.24	0.05	5.00E-02	1.00	9.51E-01
		debris falling on	380.24	1.00	2.00E-03	1.00	7.60E-01
		aerodynamic entrainment	380.24	1.00	9.60E-05	1.00	3.65E-02
	liquid	boiling	107.10	1.00	1.00E-03	1.00	1.07E-01
		[intentionally left blank]	0.00	1.00	1.00E+00	1.00	0.00E+00
		flashing spray release (50C-100C superheat)	119.00	1.00	7.00E-02	1.00	8.33E+00
		burning	2.00	1.00	1.00E-01	1.00	2.00E-01
		[intentionally left blank]	0.00	1.00	1.00E+00	1.00	0.00E+00
	liquid residue	falling	107.10	1.00	6.00E-04	1.00	6.43E-02
		charring (inert)	107.10	0.95	6.00E-05	1.00	6.10E-03
		charring (plastic)	107.10	0.05	5.00E-02	1.00	2.68E-01
		debris falling on	107.10	1.00	2.00E-03	1.00	2.14E-01
		aerodynamic entrainment	107.10	1.00	9.60E-05	1.00	1.03E-02
	SUBTOTAL						1.23E+01
Sr-90	solid/non-FSR liq.	pressurized venting	160.00	1.00	2.00E-03	1.00	3.20E-01
		boiling	159.68	1.00	1.00E-03	1.00	1.60E-01
	solid/liq. residue	falling	159.68	1.00	6.00E-04	1.00	9.58E-02
		charring (inert)	159.68	0.95	6.00E-05	1.00	9.10E-03
		charring (plastic)	159.68	0.05	5.00E-02	1.00	3.99E-01
		debris falling on	159.68	1.00	2.00E-03	1.00	3.19E-01
		aerodynamic entrainment	159.68	1.00	9.60E-05	1.00	1.53E-02
	liquid	boiling	45.00	1.00	1.00E-03	1.00	4.50E-02
		[intentionally left blank]	0.00	1.00	1.00E+00	1.00	0.00E+00
		flashing spray release (50C-100C superheat)	50.00	1.00	7.00E-02	1.00	3.50E+00
		burning	1.00	1.00	1.00E-01	1.00	1.00E-01
		[intentionally left blank]	0.00	1.00	1.00E+00	1.00	0.00E+00
	liquid residue	falling	45.00	1.00	6.00E-04	1.00	2.70E-02
		charring (inert)	45.00	0.95	6.00E-05	1.00	2.57E-03
		charring (plastic)	45.00	0.05	5.00E-02	1.00	1.13E-01
		debris falling on	45.00	1.00	2.00E-03	1.00	9.00E-02
		aerodynamic entrainment	45.00	1.00	9.60E-05	1.00	4.32E-03
	SUBTOTAL						5.20E+00
H-3	gas	all	100.00	1.00	1.00E+00	1.00	1.00E+02

Table 3E-4 Consequence for Fires - Bldg 772-1F

Table A-3b: Unmitigated Radiological Doses for a Large Fire							Building	772-1F
							Case	N/A
Should secondary effects involving post-boiling residue be included? (1=yes, 0=no)						1.00	Sheet	2 of 2
Should pressurized venting be included for non-FSR inventory? (1=yes, 0=no)						1.00		
Fraction of FSR inventory that experiences boiling*						1.00	These values indicate the state of inputs during the analysis.	
Fraction of FSR inventory that experiences flashing spray release (50C-100C superheat)						1.00		
Combustible liquid Pu-239 inventory multiplication factor						1.00		
Combustible liquid Pu-241 & Sr-90 inventory multiplication factor						1.00		
Damage Ratio (DR) for charring of non-FSR inventory residue on/under plastic						0.05		
Damage Ratio (DR) for charring of FSR inventory residue on/under plastic						0.05		
Should a surface roughness of 100 cm be used for offsite? (1=yes, 0=no)						1.00		
Should the X/Q from DOE-STD-1189 be used for onsite? (1=yes, 0=no)						1.00		
DOSE SUMMARY								
		Surface Roughness						
		100-cm SR		3-cm SR				
	Airborne							
	Source	MOI	MOI	100-meter	100-meter			
	Term**	UDF	Dose	UDF	Dose			
Radionuclide	(Ci)	(rem/Ci)	(rem)	(rem/Ci)	(rem)			
Pu-239	1.03E+00	4.58E-02	4.72E-02	1.16E+02	1.19E+02			
Pu-241	1.23E+01	8.18E-04	1.01E-02	2.10E+00	2.59E+01			
Sr-90	5.20E+00	1.43E-04	7.43E-04	2.79E-01	1.45E+00			
H-3	1.00E+02	2.92E-08	2.92E-06	9.78E-05	9.78E-03			
Total Dose			0.06		147			
* Fraction of FSR inventory that experiences boiling must equal 1 for all cases.								
** Airborne STs are calculated on Sheet 1 of 2 (i.e., previous table).								

Glovebox fire (onsite) 147 rem * EP factor = 74 rem where :
EP factor = 1hr /2 hr

Lab Module Fire (onsite) 147 rem *FS factor * EP factor = 19 rem where:
FS factor = 1/4
EP factor = 1hr /2 hr

Table 3E-5 DELETED

Table 3E-6 DELETED

Table 3E-7 Offsite Consequences Due to an Uncontrolled Reaction, Building 772-1F

Nuclide	Inventory (Ci)	Release Fraction	Filter Penetration Factor	Total Curies Released (Ci)	EDE AXAIR89Q (stack) (rem/Ci)	Consequence (rem)
H-3	1.00E+02	1.00E+00	1.00E+00	1.00E+02	1.69E-07	1.69E-05
RU-106[a]	2.10E+02	1.00E-02	4.90E-03	1.03E-02	7.83E-04	8.06E-06
PU-239[b]	4.20E+01	2.00E-03	4.90E-03	4.12E-04	9.08E-01	3.74E-04
PU-241	5.00E+02	2.00E-03	4.90E-03	4.90E-03	1.78E-02	8.72E-05
TOTAL	8.52E+02			1.00E+02		4.86E-04

[a] 210 Ci of Ru-106 are conservatively assumed

[b] 42 Ci of Pu-239 are conservatively assumed

Table 3E-8 Onsite Consequences Due to an Uncontrolled Reaction, Building 772-1F

Nuclide	Inventory (Ci)	Release Fraction	Filter Penetration Factor	Total Curies Released (Ci)	EDE AXAIR89Q (stack) (rem/Ci)	Consequence (rem)
H-3	1.00E+02	1.00E+00	1.00E+00	1.00E+02	4.00E-07	4.00E-05
RU-106[a]	2.10E+02	1.00E-02	4.90E-03	1.03E-02	1.85E-03	1.91E-05
PU-239[b]	4.20E+01	2.00E-03	4.90E-03	4.12E-04	2.15E+00	8.86E-04
PU-241	5.00E+02	2.00E-03	4.90E-03	4.90E-03	4.21E-02	2.06E-04
TOTAL	8.52E+02			1.00E+02		1.15E-03

[a] 210 Ci of Ru-106 are conservatively assumed

[b] 42 Ci of Pu-239 are conservatively assumed

Table 3E-9 Offsite Consequences Due to a Low Energy Event, Building 772-1F

Nuclide	Inventory (Ci)	Release Fraction	Filter Penetration Factor	Total Curies Released (Ci)	EDE AXAIR89Q (stack) (rem/Ci)	Consequence (rem)
H-3	1.00E+02	1.00E+00	1.00E+00	1.00E+02	1.69E-07	1.69E-05
RU-106[a]	2.10E+02	1.00E-02	4.90E-03	1.03E-02	7.83E-04	8.06E-06
PU-239[b]	4.20E+01	1.00E-04	4.90E-03	2.06E-05	9.08E-01	1.87E-05
PU-241	5.00E+02	1.00E-04	4.90E-03	2.45E-04	1.78E-02	4.36E-06
TOTAL	8.52E+02			1.00E+02		4.80E-05

[a] 210 Ci of Ru-106 are conservatively assumed

[b] 42 Ci of Pu-239 are conservatively assumed

Table 3E-10 Onsite Consequences Due to a Low Energy Event, Building 772-1F

Nuclide	Inventory (Ci)	Release Fraction	Filter Penetration Factor	Total Curies Released (Ci)	EDE AXAIR89Q (stack) (rem/Ci)	Consequence (rem)
H-3	1.00E+02	1.00E+00	1.00E+00	1.00E+02	4.00E-07	4.00E-05
RU-106[a]	2.10E+02	1.00E-02	4.90E-03	1.03E-02	1.85E-03	1.91E-05
PU-239[b]	4.20E+01	1.00E-04	4.90E-03	2.06E-05	2.15E+00	4.43E-05
PU-241	5.00E+02	1.00E-04	4.90E-03	2.45E-04	4.21E-02	1.03E-05
TOTAL	8.52E+02			1.00E+02		1.14E-04

[a] 210 Ci of Ru-106 are conservatively assumed

[b] 42 Ci of Pu-239 are conservatively assumed

APPENDIX 3F

BUILDING 772-4F OPERATIONAL-RELATED DESIGN BASIS ACCIDENTS

Table 3F-1 Offsite Releases Due to a Full-Facility Fire in Building 772-4F

FULL FACILITY FIRE IN 772-4F (BOUNDING)

Isotope	MAR (Ci)	DR	ARF	RF	LPF	RRF	Amount Airborne (Ci)
Pu-238 falling	3.72E-02	1	1.00E-04	1	1	1.00E-04	3.72E-06
Pu-238 th stress	3.72E-02	1	5.00E-04	1	1	5.00E-04	1.86E-05
Pu-239 falling	4.10E-03	1	1.00E-04	1	1	1.00E-04	4.10E-07
Pu-239 th stress	4.10E-03	1	5.00E-04	1	1	5.00E-04	2.05E-06
Am-241 falling	8.50E-04	1	1.00E-04	1	1	1.00E-04	8.50E-08
Am-241 th stress	8.50E-04	1	5.00E-04	1	1	5.00E-04	4.25E-07
Cm-244 falling	1.00E-04	1	1.00E-04	1	1	1.00E-04	1.00E-08
Cm-244 th stress	1.00E-04	1	5.00E-04	1	1	5.00E-04	5.00E-08
U-235 falling	3.00E-04	1	1.00E-04	1	1	1.00E-04	3.00E-08
U-235 th stress	3.00E-04	1	5.00E-04	1	1	5.00E-04	1.50E-07
Cs-134 falling	5.45E-03	1	1.00E-04	1	1	1.00E-04	5.45E-07
Cs-134 th stress	5.45E-03	1	5.00E-04	1	1	5.00E-04	2.73E-06
Cs-137 falling	3.63E-02	1	1.00E-04	1	1	1.00E-04	3.63E-06
Cs-137 th stress	3.63E-02	1	5.00E-04	1	1	5.00E-04	1.81E-05
Ce-144 falling	8.10E-03	1	1.00E-04	1	1	1.00E-04	8.10E-07
Ce-144 th stress	8.10E-03	1	5.00E-04	1	1	5.00E-04	4.05E-06
Sr-90 falling	7.45E-03	1	1.00E-04	1	1	1.00E-04	7.45E-07
Sr-90 th stress	7.45E-03	1	5.00E-04	1	1	5.00E-04	3.73E-06
						TOTAL	5.62E-05

Table 3F-2 Onsite Releases Due to a Full-Facility Fire in Building 772-4F

FULL FACILITY FIRE IN 772-4F (BEST ESTIMATE)

Isotope	MAR (Ci)	DR	ARF	RF	LPF	RRF	Amount Airborne (Ci)
Pu-238 falling	3.72E-02	1	1.00E-05	1	1	1.00E-05	3.72E-07
Pu-238 th stress	3.72E-02	1	1.00E-05	1	1	1.00E-05	3.72E-07
Pu-239 falling	4.10E-03	1	1.00E-05	1	1	1.00E-05	4.10E-08
Pu-239 th stress	4.10E-03	1	1.00E-05	1	1	1.00E-05	4.10E-08
Am-241 falling	8.50E-04	1	1.00E-05	1	1	1.00E-05	8.50E-09
Am-241 th stress	8.50E-04	1	1.00E-05	1	1	1.00E-05	8.50E-09
Cm-244 falling	1.00E-04	1	1.00E-05	1	1	1.00E-05	1.00E-09
Cm-244 th stress	1.00E-04	1	1.00E-05	1	1	1.00E-05	1.00E-09
U-235 falling	3.00E-04	1	1.00E-05	1	1	1.00E-05	3.00E-09
U-235 th stress	3.00E-04	1	1.00E-05	1	1	1.00E-05	3.00E-09
Cs-134 falling	5.45E-03	1	1.00E-05	1	1	1.00E-05	5.45E-08
Cs-134 th stress	5.45E-03	1	1.00E-05	1	1	1.00E-05	5.45E-08
Cs-137 falling	3.63E-02	1	1.00E-05	1	1	1.00E-05	3.63E-07
Cs-137 th stress	3.63E-02	1	1.00E-05	1	1	1.00E-05	3.63E-07
Ce-144 falling	8.10E-03	1	1.00E-05	1	1	1.00E-05	8.10E-08
Ce-144 th stress	8.10E-03	1	1.00E-05	1	1	1.00E-05	8.10E-08
Sr-90 falling	7.45E-03	1	1.00E-05	1	1	1.00E-05	7.45E-08
Sr-90 th stress	7.45E-03	1	1.00E-05	1	1	1.00E-05	7.45E-08
						TOTAL	2.00E-06

APPENDIX 3G

F/H LAB DESIGN BASIS EARTHQUAKE ACCIDENTS

Table 3G-1 Offsite Consequences Due to a Release of 200 Ci of Pu-238, Design Basis Earthquake, Building 772-F

Nuclide	Inventory (Ci)	Release Fraction	Filter Penetration Factor	Total Curies Released (Ci)	EDE AXAIR89Q (rem/Ci)	Consequence (rem)
SR-89	4.31E+00	2.00E-03	4.90E-05	4.22E-07	5.01E-05	2.11E-11
SR-90	9.02E-01	2.00E-03	4.90E-05	8.84E-08	1.76E-03	1.56E-10
Y-90	9.02E-01	2.00E-03	4.90E-05	8.84E-08	1.10E-05	9.72E-13
Y-91	8.24E+00	2.00E-03	4.90E-05	8.08E-07	5.95E-05	4.81E-11
ZR-95	1.61E+01	2.00E-03	4.90E-05	1.58E-06	2.60E-05	4.11E-11
NB-95	1.45E+01	2.00E-03	4.90E-05	1.42E-06	6.41E-06	9.10E-12
RU-103	7.84E+00	1.00E-02	4.90E-05	3.84E-06	1.08E-05	4.15E-11
RU-106	3.02E+01	1.00E-02	4.90E-05	1.48E-05	5.95E-04	8.81E-09
AG-110M	1.02E+00	2.00E-03	4.90E-05	1.00E-07	7.29E-05	7.29E-12
SN-123	1.73E-02	2.00E-03	4.90E-05	1.70E-09	4.06E-05	6.90E-14
SB-125	4.71E-01	2.00E-03	4.90E-05	4.62E-08	1.35E-05	6.24E-13
TE-127	5.88E-01	2.00E-03	4.90E-05	5.76E-08	3.80E-07	2.19E-14
TE-129	1.73E-02	2.00E-03	4.90E-05	1.70E-09	9.53E-08	1.62E-16
CS-134	6.28E-01	2.00E-03	4.90E-05	6.15E-08	6.43E-05	3.95E-12
CS-137	2.59E+00	2.00E-03	4.90E-05	2.54E-07	4.33E-05	1.10E-11
CE-141	2.82E+00	2.00E-03	4.90E-05	2.76E-07	1.15E-05	3.17E-12
CE-144	3.06E+01	2.00E-03	4.90E-05	3.00E-06	4.74E-04	1.42E-09
PR-144	3.06E+01	2.00E-03	4.90E-05	3.00E-06	2.12E-08	6.36E-14
PM-147	6.67E+00	2.00E-03	4.90E-05	6.54E-07	4.60E-05	3.01E-11
PM-148M	5.88E-01	2.00E-03	4.90E-05	5.76E-08	1.44E-05	8.29E-13
EU-154	1.80E-02	2.00E-03	4.90E-05	1.76E-09	3.52E-04	6.20E-13
U-234	3.80E-09	2.00E-03	4.90E-05	3.72E-16	1.76E-01	6.55E-17
U-235	5.10E-10	2.00E-03	4.90E-05	5.00E-17	1.62E-01	8.10E-18
U-236	4.71E-10	2.00E-03	4.90E-05	4.62E-17	1.62E-01	7.48E-18
U-238	1.33E-09	2.00E-03	4.90E-05	1.30E-16	1.62E-01	2.11E-17
NP-237	1.73E-02	2.00E-03	4.90E-05	1.70E-09	6.63E-01	1.13E-09
PU-238	2.00E+02	2.00E-03	4.90E-05	1.96E-05	6.22E-01	1.22E-05
PU-239	0.00E+00	2.00E-03	4.90E-05	0.00E+00	6.90E-01	0.00E+00
PU-240	0.00E+00	2.00E-03	4.90E-05	0.00E+00	6.90E-01	0.00E+00
PU-241	0.00E+00	2.00E-03	4.90E-05	0.00E+00	1.35E-02	0.00E+00
PU-242	0.00E+00	2.00E-03	4.90E-05	0.00E+00	6.50E-01	0.00E+00
AM-241	3.73E-03	2.00E-03	4.90E-05	3.66E-10	7.04E-01	2.58E-10
TOTAL	3.60E+02			5.02E-05		1.22E-05

Table 3G-2 Onsite Consequences Due to a Release of 200 Ci of Pu-238, Design Basis Earthquake, Building 772-F

Nuclide	Inventory (Ci)	Release Fraction	Filter Penetration Factor	Total Curies Released (Ci)	EDE AXAIR89Q (rem/Ci)	Consequence (rem)
SR-89	4.31E+00	2.00E-03	4.90E-05	4.22E-07	6.24E-05	2.63E-11
SR-90	9.02E-01	2.00E-03	4.90E-05	8.84E-08	2.19E-03	1.94E-10
Y-90	9.02E-01	2.00E-03	4.90E-05	8.84E-08	1.38E-05	1.22E-12
Y-91	8.24E+00	2.00E-03	4.90E-05	8.08E-07	7.42E-05	6.00E-11
ZR-95	1.61E+01	2.00E-03	4.90E-05	1.58E-06	3.36E-05	5.31E-11
NB-95	1.45E+01	2.00E-03	4.90E-05	1.42E-06	9.22E-06	1.31E-11
RU-103	7.84E+00	1.00E-02	4.90E-05	3.84E-06	1.42E-05	5.45E-11
RU-106	3.02E+01	1.00E-02	4.90E-05	1.48E-05	7.42E-04	1.10E-08
AG-110M	1.02E+00	2.00E-03	4.90E-05	1.00E-07	9.51E-05	9.51E-12
SN-123	1.73E-02	2.00E-03	4.90E-05	1.70E-09	5.06E-05	8.60E-14
SB-125	4.71E-01	2.00E-03	4.90E-05	4.62E-08	1.75E-05	8.09E-13
TE-127	5.88E-01	2.00E-03	4.90E-05	5.76E-08	4.98E-07	2.87E-14
TE-129	1.73E-02	2.00E-03	4.90E-05	1.70E-09	2.47E-07	4.20E-16
CS-134	6.28E-01	2.00E-03	4.90E-05	6.15E-08	8.26E-05	5.08E-12
CS-137	2.59E+00	2.00E-03	4.90E-05	2.54E-07	5.39E-05	1.37E-11
CE-141	2.82E+00	2.00E-03	4.90E-05	2.76E-07	1.45E-05	4.00E-12
CE-144	3.06E+01	2.00E-03	4.90E-05	3.00E-06	5.90E-04	1.77E-09
PR-144	3.06E+01	2.00E-03	4.90E-05	3.00E-06	1.23E-07	3.69E-13
PM-147	6.67E+00	2.00E-03	4.90E-05	6.54E-07	5.73E-05	3.75E-11
PM-148M	5.88E-01	2.00E-03	4.90E-05	5.76E-08	2.12E-05	1.22E-12
EU-154	1.80E-02	2.00E-03	4.90E-05	1.76E-09	4.41E-04	7.76E-13
U-234	3.80E-09	2.00E-03	4.90E-05	3.72E-16	2.19E-01	8.15E-17
U-235	5.10E-10	2.00E-03	4.90E-05	5.00E-17	2.02E-01	1.01E-17
U-236	4.71E-10	2.00E-03	4.90E-05	4.62E-17	2.02E-01	9.33E-18
U-238	1.33E-09	2.00E-03	4.90E-05	1.30E-16	2.02E-01	2.63E-17
NP-237	1.73E-02	2.00E-03	4.90E-05	1.70E-09	8.26E-01	1.40E-09
PU-238	2.00E+02	2.00E-03	4.90E-05	1.96E-05	7.75E-01	1.52E-05
PU-239	0.00E+00	2.00E-03	4.90E-05	0.00E+00	8.60E-01	0.00E+00
PU-240	0.00E+00	2.00E-03	4.90E-05	0.00E+00	8.60E-01	0.00E+00
PU-241	0.00E+00	2.00E-03	4.90E-05	0.00E+00	1.69E-02	0.00E+00
PU-242	0.00E+00	2.00E-03	4.90E-05	0.00E+00	8.09E-01	0.00E+00
AM-241	3.73E-03	2.00E-03	4.90E-05	3.66E-10	8.76E-01	3.21E-10
TOTAL	3.60E+02			5.02E-05		1.52E-05

Table 3G-3 Offsite Consequences Due to a Release of 200 Ci of Plutonium Type 50 Material, Design Basis Earthquake, Building 772-F

Nuclide	Inventory (Ci)	Release Fraction	Filter Penetration Factor	Total Curies Released (Ci)	EDE AXAIR89Q (rem/Ci)	Consequence (rem)
SR-89	2.12E-01	2.00E-03	4.90E-05	2.08E-08	5.01E-05	1.04E-12
SR-90	2.03E-02	2.00E-03	4.90E-05	1.99E-09	1.76E-03	3.50E-12
Y-90	2.03E-02	2.00E-03	4.90E-05	1.99E-09	1.10E-05	2.19E-14
Y-91	3.26E-01	2.00E-03	4.90E-05	3.19E-08	5.95E-05	1.90E-12
ZR-95	3.26E+00	2.00E-03	4.90E-05	3.19E-07	2.60E-05	8.30E-12
NB-95	2.17E-01	2.00E-03	4.90E-05	2.12E-08	6.41E-06	1.36E-13
RU-103	1.76E-01	1.00E-02	4.90E-05	8.65E-08	1.08E-05	9.34E-13
RU-106	2.60E+03	1.00E-02	4.90E-05	1.27E-03	5.95E-04	7.58E-07
AG-110M	2.06E-02	2.00E-03	4.90E-05	2.02E-09	7.29E-05	1.47E-13
SN-123	2.78E-03	2.00E-03	4.90E-05	2.73E-10	4.06E-05	1.11E-14
SB-125	3.51E-03	2.00E-03	4.90E-05	3.44E-10	1.35E-05	4.64E-15
TE-127	5.30E-03	2.00E-03	4.90E-05	5.19E-10	3.80E-07	1.97E-16
TE-129	3.32E-03	2.00E-03	4.90E-05	3.25E-10	9.53E-08	3.10E-17
CS-134	3.55E-03	2.00E-03	4.90E-05	3.48E-10	6.43E-05	2.23E-14
CS-137	2.72E-02	2.00E-03	4.90E-05	2.67E-09	4.33E-05	1.15E-13
CE-141	1.05E-01	2.00E-03	4.90E-05	1.03E-08	1.15E-05	1.18E-13
CE-144	4.89E-01	2.00E-03	4.90E-05	4.79E-08	4.74E-04	2.27E-11
PR-144	4.89E-01	2.00E-03	4.90E-05	4.79E-08	2.12E-08	1.02E-15
PM-147	8.76E-02	2.00E-03	4.90E-05	8.59E-09	4.60E-05	3.95E-13
PM-148M	1.12E-03	2.00E-03	4.90E-05	1.10E-10	1.44E-05	1.58E-15
EU-155	1.55E-03	2.00E-03	4.90E-05	1.52E-10	5.28E-05	8.00E-15
U-234	4.04E-10	2.00E-03	4.90E-05	3.96E-17	1.76E-01	6.97E-18
U-235	6.47E-09	2.00E-03	4.90E-05	6.34E-16	1.62E-01	1.03E-16
U-236	6.47E-09	2.00E-03	4.90E-05	6.34E-16	1.62E-01	1.03E-16
U-238	5.98E-07	2.00E-03	4.90E-05	5.86E-14	1.62E-01	9.49E-15
NP-237	8.60E-09	2.00E-03	4.90E-05	8.42E-16	6.63E-01	5.59E-16
PU-238	0.00E+00	2.00E-03	4.90E-05	0.00E+00	6.22E-01	0.00E+00
PU-239	1.08E+02	2.00E-03	4.90E-05	1.06E-05	6.90E-01	7.30E-06
PU-240	9.20E+01	2.00E-03	4.90E-05	9.02E-06	6.90E-01	6.22E-06
PU-241	1.80E+03	2.00E-03	4.90E-05	1.76E-04	1.35E-02	2.38E-06
PU-242	0.00E+00	2.00E-03	4.90E-05	0.00E+00	6.50E-01	0.00E+00
TOTAL	4.61E+03			1.47E-03		1.67E-05

Table 3G-4 Onsite Consequences Due to a Release of 200 Ci of Plutonium Type 50 Material, Design Basis Earthquake, Building 772-F

Nuclide	Inventory (Ci)	Release Fraction	Filter Penetration Factor	Total Curies Released (Ci)	EDE AXAIR89Q (rem/Ci)	Consequence (rem)
SR-89	2.12E-01	2.00E-03	4.90E-05	2.08E-08	6.24E-05	1.30E-12
SR-90	2.03E-02	2.00E-03	4.90E-05	1.99E-09	2.19E-03	4.36E-12
Y-90	2.03E-02	2.00E-03	4.90E-05	1.99E-09	1.38E-05	2.75E-14
Y-91	3.26E-01	2.00E-03	4.90E-05	3.19E-08	7.42E-05	2.37E-12
ZR-95	3.26E+00	2.00E-03	4.90E-05	3.19E-07	3.36E-05	1.07E-11
NB-95	2.17E-01	2.00E-03	4.90E-05	2.12E-08	9.22E-06	1.96E-13
RU-103	1.76E-01	1.00E-02	4.90E-05	8.65E-08	1.42E-05	1.23E-12
RU-106	2.60E+03	1.00E-02	4.90E-05	1.27E-03	7.42E-04	9.45E-07
AG-110M	2.06E-02	2.00E-03	4.90E-05	2.02E-09	9.51E-05	1.92E-13
SN-123	2.78E-03	2.00E-03	4.90E-05	2.73E-10	5.06E-05	1.38E-14
SB-125	3.51E-03	2.00E-03	4.90E-05	3.44E-10	1.75E-05	6.01E-15
TE-127	5.30E-03	2.00E-03	4.90E-05	5.19E-10	4.98E-07	2.59E-16
TE-129	3.32E-03	2.00E-03	4.90E-05	3.25E-10	2.47E-07	8.04E-17
CS-134	3.55E-03	2.00E-03	4.90E-05	3.48E-10	8.26E-05	2.87E-14
CS-137	2.72E-02	2.00E-03	4.90E-05	2.67E-09	5.39E-05	1.44E-13
CE-141	1.05E-01	2.00E-03	4.90E-05	1.03E-08	1.45E-05	1.49E-13
CE-144	4.89E-01	2.00E-03	4.90E-05	4.79E-08	5.90E-04	2.83E-11
PR-144	4.89E-01	2.00E-03	4.90E-05	4.79E-08	1.23E-07	5.89E-15
PM-147	8.76E-02	2.00E-03	4.90E-05	8.59E-09	5.73E-05	4.92E-13
PM-148M	1.12E-03	2.00E-03	4.90E-05	1.10E-10	2.12E-05	2.32E-15
EU-155	1.55E-03	2.00E-03	4.90E-05	1.52E-10	6.59E-05	9.99E-15
U-234	4.04E-10	2.00E-03	4.90E-05	3.96E-17	2.19E-01	8.67E-18
U-235	6.47E-09	2.00E-03	4.90E-05	6.34E-16	2.02E-01	1.28E-16
U-236	6.47E-09	2.00E-03	4.90E-05	6.34E-16	2.02E-01	1.28E-16
U-238	5.98E-07	2.00E-03	4.90E-05	5.86E-14	2.02E-01	1.18E-14
NP-237	8.60E-09	2.00E-03	4.90E-05	8.42E-16	8.26E-01	6.96E-16
PU-238	0.00E+00	2.00E-03	4.90E-05	0.00E+00	7.75E-01	0.00E+00
PU-239	1.08E+02	2.00E-03	4.90E-05	1.06E-05	8.60E-01	9.10E-06
PU-240	9.20E+01	2.00E-03	4.90E-05	9.02E-06	8.60E-01	7.75E-06
PU-241	1.80E+03	2.00E-03	4.90E-05	1.76E-04	1.69E-02	2.98E-06
PU-242	0.00E+00	2.00E-03	4.90E-05	0.00E+00	8.09E-01	0.00E+00
TOTAL	4.61E+03			1.47E-03		2.08E-05

Table 3G-5 Offsite Consequences Due to a Release of 2,450 Curies of Tritium, Design Basis Earthquake, Building 772-F

Nuclide	Inventory (Ci)	Release Fraction	Filter Penetration Factor	Total Curies Released (Ci)	EDE AXAIR89Q (rem/Ci)	Consequence (rem)
H-3	2.45E+03	1.00E+00	1.00E+00	2.45E+03	1.29E-07	3.16E-04
NA-24	1.70E-01	1.00E-04	4.90E-05	8.33E-10	2.72E-06	2.27E-15
SR-91	6.81E-03	1.00E-04	4.90E-05	3.34E-11	2.10E-06	7.01E-17
TC-99	5.12E-03	1.00E-04	4.90E-05	2.51E-11	1.01E-05	2.53E-16
CE-141	3.41E-04	1.00E-04	4.90E-05	1.67E-12	1.15E-05	1.92E-17
CE-143	8.53E-04	1.00E-04	4.90E-05	4.18E-12	4.41E-06	1.84E-17
NP-237	5.12E-03	1.00E-04	4.90E-05	2.51E-11	6.63E-01	1.66E-11
TOTAL	2.45E+03			2.45E+03		3.16E-04

Table 3G-6 Onsite Consequences Due to a Release of 2,450 Curies of Tritium, Design Basis Earthquake, Building 772-F

Nuclide	Inventory (Ci)	Release Fraction	Filter Penetration Factor	Total Curies Released (Ci)	EDE AXAIR89Q (rem/Ci)	Consequence (rem)
H-3	2.45E+03	1.00E+00	1.00E+00	2.45E+03	1.60E-07	3.92E-04
NA-24	1.70E-01	1.00E-04	4.90E-05	8.33E-10	9.52E-06	7.93E-15
SR-91	6.81E-03	1.00E-04	4.90E-05	3.34E-11	3.81E-06	1.27E-16
TC-99	5.12E-03	1.00E-04	4.90E-05	2.51E-11	1.26E-05	3.16E-16
CE-141	3.41E-04	1.00E-04	4.90E-05	1.67E-12	1.45E-05	2.42E-17
CE-143	8.53E-04	1.00E-04	4.90E-05	4.18E-12	6.00E-06	2.51E-17
NP-237	5.12E-03	1.00E-04	4.90E-05	2.51E-11	8.26E-01	2.07E-11
TOTAL	2.45E+03			2.45E+03		3.92E-04

Table 3G-7 Offsite Consequences Due to a Design Basis Earthquake, Building 772-1F

Nuclide	Inventory (Ci)	Release Fraction	Filter Penetration Factor	Total Curies Released (Ci)	EDE AXAIR89Q (rem/Ci)	Consequence (rem)
H-3	1.00E+02	1.00E+00	1.00E+00	1.00E+02	2.51E-07	2.51E-05
RU-106	2.10E+02	1.00E-02	1.00E+00	2.10E+00	1.16E-03	2.44E-03
AM-241	4.20E+01	2.00E-03	1.00E+00	8.40E-02	1.37E+00	1.15E-01
PU-241	5.00E+02	2.00E-03	1.00E+00	1.00E+00	2.64E-02	2.64E-02
TOTAL	8.52E+02			1.03E+02		1.44E-01

Table 3G-8 Onsite Consequences Due to a Design Basis Earthquake, Building 772-1F

Nuclide	Inventory (Ci)	Release Fraction	Filter Penetration Factor	Total Curies Released (Ci)	EDE AXAIR89Q (rem/Ci)	Consequence (rem)
H-3	1.00E+02	1.00E+00	1.00E+00	1.00E+02	2.05E-06	2.05E-04
RU-106	2.10E+02	1.00E-02	1.00E+00	2.10E+00	9.50E-03	2.00E-02
AM-241	4.20E+01	2.00E-03	1.00E+00	8.40E-02	1.12E+01	9.41E-01
PU-241	5.00E+02	2.00E-03	1.00E+00	1.00E+00	2.16E-01	2.16E-01
TOTAL	8.52E+02			1.03E+02		1.18E+00

Table 3G-9 Offsite Consequences Due to a Design Basis Straight Wind, Building 772-1F

Nuclide	Inventory (Ci)	Release Fraction	Filter Penetration Factor	Total Curies Released (Ci)	AXAOTHER Straight Wind MOI (rem/Ci)	Consequence (rem)
H-3	1.00E+02	1.00E+00	1.00E+00	1.00E+02	1.12E-09	1.12E-07
RU-106[a]	2.10E+02	1.00E+00	1.00E+00	2.10E+02	1.53E-05	3.21E-03
PU-239[b]	4.20E+01	1.00E+00	1.00E+00	4.20E+01	6.02E-03	2.53E-01
PU-241	5.00E+02	1.00E+00	1.00E+00	5.00E+02	1.18E-04	5.90E-02
TOTAL	8.52E+02			8.52E+02		3.15E-01

[a] 210 Ci of Ru-106 are conservatively assumed

[b] 42 Ci of Pu-239 are conservatively assumed

Table 3G-10 Offsite/Onsite Consequences Due to a Design Basis Tornado, Building 772-1F:

Offsite Consequences Due to a Beyond Design Basis Tornado, Building 772-1F:

Radionuclide	Tornado Chi/Q (sec/m3)	Breathing Rate (m3/sec)	Released Activity (Curies)	Inhalation Dose Factor (rem/Curie)	Inhalation CEDE (rem)
H-3	3.00E-07	3.33E-04	1.00E+02	9.99E+01	9.98E-07
Sr-90	3.00E-07	3.33E-04	2.10E+02	5.92E+05	1.24E-02
Pu-241	3.00E-07	3.33E-04	500	3.33E+06	1.66E-01
Pu-239	3.00E-07	3.33E-04	4.20E+01	1.85E+08	7.76E-01
				Total:	9.55E-01

Onsite Consequences Due to a Beyond Design Basis Tornado, Building 772-1F:

Radionuclide	Tornado Chi/Q (sec/m3)	Breathing Rate (m3/sec)	Released Activity (Curies)	Inhalation Dose Factor (rem/Curie)	Inhalation CEDE (rem)
H-3	6.00E-07	3.33E-04	100	9.99E+01	2.00E-06
Sr-90	6.00E-07	3.33E-04	210	2.85E+05	1.2E-02
Pu-241	6.00E-07	3.33E-04	500	2.15E+06	2.14E-01
Am-241	6.00E-07	3.33E-04	42	1.18E+08	9.94E-01
				Total:	1.22E+00

APPENDIX 3H

F/H LAB OPERATIONAL-RELATED AND NATURAL PHENOMENA BEYOND DESIGN BASIS ACCIDENTS

Table 3H-1 Beyond Design Basis Offsite Consequences Due to a Glovebox Explosion, Building 772-F

Nuclide	Inventory (Ci)	Release Fraction	Filter Penetration Factor	Total Curies Released (Ci)	MACCS TEDE (ground) (rem)	Consequence (rem)
Pu-239	5 E+00	1.00 E+00	1.00 E+00	5 E+00	9.88 E-02	4.94 E-01
Pu-239 eq[a]	47 E+00	1.5 E-03	1.00 E+00	7 E-02	9.88 E-02	6.92 E-03
Total				5.07 E+00		5.01 E-01

[a] This table is a representative selection of important isotopes found in Building 772-F converted to a Pu-239 dose equivalent (37 Ci alpha, 500 Ci Pu-241, 210 Ci beta/gamma (Sr-90) and 100 Ci tritium).

Table 3H-2 Beyond Design Basis Onsite Consequences Due to a Glovebox Explosion, Building 772-F

Nuclide	Inventory (Ci)	Release Fraction	Filter Penetration Factor	Total Curies Released (Ci)	MACCS TEDE (ground) (rem)	Consequence (rem)
Pu-239	5 E+00	1.00 E+00	1.00 E+00	5 E+00	2.70 E+01	1.35 E+00
Pu-239 eq[a]	47 E+00	1.5 E-03	1.00 E+00	7 E-02	2.70 E+01	1.89 E+00
Total				5.07 E+00		1.37 E+02

[a] This table is a representative selection of important isotopes found in Building 772-F converted to a Pu-239 dose equivalent (37 Ci alpha, 500 Ci Pu-241, 210 Ci beta/gamma (Sr-90) and 100 Ci tritium).

Table 3H-3 Beyond Design Basis Offsite Consequences Due to an Uncontrolled Reaction, 40 Ci Alpha, Building 772-F

Nuclide	Inventory (Ci)	Release Fraction	Filter Penetration Factor	Total Curies Released (Ci)	EDE AXAIR89Q (ground) (rem/Ci)	Consequence (rem)
SR-89	4.24E-02	2.00E-03	1.00E+00	8.48E-05	9.45E-05	8.01E-09
SR-90	4.05E-03	2.00E-03	1.00E+00	8.10E-06	3.32E-03	2.69E-08
Y-90	4.05E-03	2.00E-03	1.00E+00	8.10E-06	2.07E-05	1.68E-10
Y-91	6.50E-02	2.00E-03	1.00E+00	1.30E-04	1.12E-04	1.46E-08
ZR-95	6.50E-01	2.00E-03	1.00E+00	1.30E-03	4.92E-05	6.40E-08
NB-95	4.32E-02	2.00E-03	1.00E+00	8.64E-05	1.21E-05	1.05E-09
RU-103	3.52E-02	1.00E-02	1.00E+00	3.52E-04	2.04E-05	7.18E-09
RU-106	5.20E+02	1.00E-02	1.00E+00	5.20E+00	1.12E-03	5.82E-03
AG-110M	4.12E-03	2.00E-03	1.00E+00	8.24E-06	1.38E-04	1.14E-09
SN-123	5.56E-04	2.00E-03	1.00E+00	1.11E-06	7.67E-05	8.51E-11
SB-125	7.00E-04	2.00E-03	1.00E+00	1.40E-06	2.54E-05	3.56E-11
TE-127	1.06E-03	2.00E-03	1.00E+00	2.12E-06	6.92E-07	1.47E-12
TE-129	6.63E-04	2.00E-03	1.00E+00	1.33E-06	1.37E-07	1.82E-13
CS-134	7.08E-04	2.00E-03	1.00E+00	1.42E-06	1.21E-04	1.72E-10
CS-137	5.43E-03	2.00E-03	1.00E+00	1.09E-05	8.18E-05	8.92E-10
CE-141	2.09E-02	2.00E-03	1.00E+00	4.18E-05	2.18E-05	9.11E-10
CE-144	9.75E-02	2.00E-03	1.00E+00	1.95E-04	8.94E-04	1.74E-07
PR-144	9.75E-02	2.00E-03	1.00E+00	1.95E-04	1.27E-08	2.48E-12
PM-147	1.75E-02	2.00E-03	1.00E+00	3.50E-05	8.69E-05	3.04E-09
PM-148M	2.23E-04	2.00E-03	1.00E+00	4.46E-07	2.73E-05	1.22E-11
EU-155	3.09E-04	2.00E-03	1.00E+00	6.18E-07	9.97E-05	6.16E-11
U-234	8.07E-11	2.00E-03	1.00E+00	1.61E-13	3.32E-01	5.35E-14
U-235	1.29E-09	2.00E-03	1.00E+00	2.58E-12	3.07E-01	7.92E-13
U-236	1.29E-09	2.00E-03	1.00E+00	2.58E-12	3.07E-01	7.92E-13
U-238	1.19E-07	2.00E-03	1.00E+00	2.38E-10	3.07E-01	7.31E-11
NP-237	1.72E-09	2.00E-03	1.00E+00	3.44E-12	1.25E+00	4.30E-12
PU-238	0.00E+00	2.00E-03	1.00E+00	0.00E+00	1.18E+00	0.00E+00
PU-239	4.00E+01	2.00E-03	1.00E+00	8.00E-02	1.30E+00	1.04E-01
PU-240	0.00E+00	2.00E-03	1.00E+00	0.00E+00	1.30E+00	0.00E+00
PU-241	5.00E+02	2.00E-03	1.00E+00	1.00E+00	2.56E-02	2.56E-02
PU-242	0.00E+00	2.00E-03	1.00E+00	0.00E+00	1.23E+00	0.00E+00
TOTAL	1.06E+03			6.28E+00		1.35E-01

Table 3H-4 Beyond Design Basis Onsite Consequences Due to an Uncontrolled Reaction, 40 Ci Alpha, Building 772-F

Nuclide	Inventory (Ci)	Release Fraction	Filter Penetration Factor	Total Curies Released (Ci)	EDE AXAIR89Q (ground) (rem/Ci)	Consequence (rem)
SR-89	4.24E-02	2.00E-03	1.00E+00	8.48E-05	7.98E-04	6.77E-08
SR-90	4.05E-03	2.00E-03	1.00E+00	8.10E-06	2.81E-02	2.28E-07
Y-90	4.05E-03	2.00E-03	1.00E+00	8.10E-06	1.77E-04	1.43E-09
Y-91	6.50E-02	2.00E-03	1.00E+00	1.30E-04	9.50E-04	1.24E-07
ZR-95	6.50E-01	2.00E-03	1.00E+00	1.30E-03	4.14E-04	5.38E-07
NB-95	4.32E-02	2.00E-03	1.00E+00	8.64E-05	1.01E-04	8.73E-09
RU-103	3.52E-02	1.00E-02	1.00E+00	3.52E-04	1.71E-04	6.02E-08
RU-106	5.20E+02	1.00E-02	1.00E+00	5.20E+00	9.50E-03	4.94E-02
AG-110M	4.12E-03	2.00E-03	1.00E+00	8.24E-06	1.16E-03	9.56E-09
SN-123	5.56E-04	2.00E-03	1.00E+00	1.11E-06	6.47E-04	7.18E-10
SB-125	7.00E-04	2.00E-03	1.00E+00	1.40E-06	2.14E-04	3.00E-10
TE-127	1.06E-03	2.00E-03	1.00E+00	2.12E-06	6.26E-06	1.33E-11
TE-129	6.63E-04	2.00E-03	1.00E+00	1.33E-06	1.93E-06	2.57E-12
CS-134	7.08E-04	2.00E-03	1.00E+00	1.42E-06	1.02E-03	1.45E-09
CS-137	5.43E-03	2.00E-03	1.00E+00	1.09E-05	6.91E-04	7.53E-09
CE-141	2.09E-02	2.00E-03	1.00E+00	4.18E-05	1.84E-04	7.69E-09
CE-144	9.75E-02	2.00E-03	1.00E+00	1.95E-04	7.55E-03	1.47E-06
PR-144	9.75E-02	2.00E-03	1.00E+00	1.95E-04	9.41E-07	1.83E-10
PM-147	1.75E-02	2.00E-03	1.00E+00	3.50E-05	7.34E-04	2.57E-08
PM-148M	2.23E-04	2.00E-03	1.00E+00	4.46E-07	2.26E-04	1.01E-10
EU-155	3.09E-04	2.00E-03	1.00E+00	6.18E-07	8.42E-04	5.20E-10
U-234	8.07E-11	2.00E-03	1.00E+00	1.61E-13	2.81E+00	4.52E-13
U-235	1.29E-09	2.00E-03	1.00E+00	2.58E-12	2.59E+00	6.68E-12
U-236	1.29E-09	2.00E-03	1.00E+00	2.58E-12	2.59E+00	6.68E-12
U-238	1.19E-07	2.00E-03	1.00E+00	2.38E-10	2.59E+00	6.16E-10
NP-237	1.72E-09	2.00E-03	1.00E+00	3.44E-12	1.06E+01	3.65E-11
PU-238	0.00E+00	2.00E-03	1.00E+00	0.00E+00	9.93E+00	0.00E+00
PU-239	4.00E+01	2.00E-03	1.00E+00	8.00E-02	1.10E+01	8.80E-01
PU-240	0.00E+00	2.00E-03	1.00E+00	0.00E+00	1.10E+01	0.00E+00
PU-241	5.00E+02	2.00E-03	1.00E+00	1.00E+00	2.16E-01	2.16E-01
PU-242	0.00E+00	2.00E-03	1.00E+00	0.00E+00	1.04E+01	0.00E+00
TOTAL	1.06E+03			6.28E+00		1.15E+00

Table 3H-5 Beyond Design Basis Offsite Consequences Due to an Uncontrolled Reaction, 200 Ci Pu-238, Building 772-F

Nuclide	Inventory (Ci)	Release Fraction	Filter Penetration Factor	Total Curies Released (Ci)	EDE AXAIR89Q (ground) (rem/Ci)	Consequence (rem)
SR-89	4.31E+00	2.00E-03	1.00E+00	8.62E-03	9.45E-05	8.15E-07
SR-90	9.02E-01	2.00E-03	1.00E+00	1.80E-03	3.32E-03	5.98E-06
Y-90	9.02E-01	2.00E-03	1.00E+00	1.80E-03	2.07E-05	3.73E-08
Y-91	8.24E+00	2.00E-03	1.00E+00	1.65E-02	1.12E-04	1.85E-06
ZR-95	1.61E+01	2.00E-03	1.00E+00	3.22E-02	4.92E-05	1.58E-06
NB-95	1.45E+01	2.00E-03	1.00E+00	2.90E-02	1.21E-05	3.51E-07
RU-103	7.84E+00	1.00E-02	1.00E+00	7.84E-02	2.04E-05	1.60E-06
RU-106	3.02E+01	1.00E-02	1.00E+00	3.02E-01	1.12E-03	3.38E-04
AG-110M	1.02E+00	2.00E-03	1.00E+00	2.04E-03	1.38E-04	2.82E-07
SN-123	1.73E-02	2.00E-03	1.00E+00	3.46E-05	7.67E-05	2.65E-09
SB-125	4.71E-01	2.00E-03	1.00E+00	9.42E-04	2.54E-05	2.39E-08
TE-127	5.88E-01	2.00E-03	1.00E+00	1.18E-03	6.92E-07	8.17E-10
TE-129	1.73E-02	2.00E-03	1.00E+00	3.46E-05	1.37E-07	4.74E-12
CS-134	6.28E-01	2.00E-03	1.00E+00	1.26E-03	1.21E-04	1.52E-07
CS-137	2.59E+00	2.00E-03	1.00E+00	5.18E-03	8.18E-05	4.24E-07
CE-141	2.82E+00	2.00E-03	1.00E+00	5.64E-03	2.18E-05	1.23E-07
CE-144	3.06E+01	2.00E-03	1.00E+00	6.12E-02	8.94E-04	5.47E-05
PR-144	3.06E+01	2.00E-03	1.00E+00	6.12E-02	1.27E-08	7.77E-10
PM-147	6.67E+00	2.00E-03	1.00E+00	1.33E-02	8.69E-05	1.16E-06
PM-148M	5.88E-01	2.00E-03	1.00E+00	1.18E-03	2.73E-05	3.22E-08
EU-155	1.80E-02	2.00E-03	1.00E+00	3.60E-05	9.97E-05	3.59E-09
U-234	3.80E-09	2.00E-03	1.00E+00	7.60E-12	3.32E-01	2.52E-12
U-235	5.10E-10	2.00E-03	1.00E+00	1.02E-12	3.07E-01	3.13E-13
U-236	4.71E-10	2.00E-03	1.00E+00	9.42E-13	3.07E-01	2.89E-13
U-238	1.33E-09	2.00E-03	1.00E+00	2.66E-12	3.07E-01	8.17E-13
NP-237	1.73E-02	2.00E-03	1.00E+00	3.46E-05	1.25E+00	4.33E-05
PU-238	2.00E+02	2.00E-03	1.00E+00	4.00E-01	1.18E+00	4.72E-01
PU-239	0.00E+00	2.00E-03	1.00E+00	0.00E+00	1.30E+00	0.00E+00
PU-240	0.00E+00	2.00E-03	1.00E+00	0.00E+00	1.30E+00	0.00E+00
PU-241	0.00E+00	2.00E-03	1.00E+00	0.00E+00	2.56E-02	0.00E+00
PU-242	0.00E+00	2.00E-03	1.00E+00	0.00E+00	1.23E+00	0.00E+00
AM-241	3.73E-03	2.00E-03	1.00E+00	7.46E-06	1.33E+00	9.92E-06
TOTAL	3.60E+02			1.02E+00		4.72E-01

Table 3H-6 Beyond Design Basis Onsite Consequences Due to an Uncontrolled Reaction, 200 Ci Pu-238, Building 772-F

Nuclide	Inventory (Ci)	Release Fraction	Filter Penetration Factor	Total Curies Released (Ci)	EDE AXAIR89Q (ground) (rem/Ci)	Consequence (rem)
SR-89	4.31E+00	2.00E-03	1.00E+00	8.62E-03	7.98E-04	6.88E-06
SR-90	9.02E-01	2.00E-03	1.00E+00	1.80E-03	2.81E-02	5.06E-05
Y-90	9.02E-01	2.00E-03	1.00E+00	1.80E-03	1.77E-04	3.19E-07
Y-91	8.24E+00	2.00E-03	1.00E+00	1.65E-02	9.50E-04	1.57E-05
ZR-95	1.61E+01	2.00E-03	1.00E+00	3.22E-02	4.14E-04	1.33E-05
NB-95	1.45E+01	2.00E-03	1.00E+00	2.90E-02	1.01E-04	2.93E-06
RU-103	7.84E+00	1.00E-02	1.00E+00	7.84E-02	1.71E-04	1.34E-05
RU-106	3.02E+01	1.00E-02	1.00E+00	3.02E-01	9.50E-03	2.87E-03
AG-110M	1.02E+00	2.00E-03	1.00E+00	2.04E-03	1.16E-03	2.37E-06
SN-123	1.73E-02	2.00E-03	1.00E+00	3.46E-05	6.47E-04	2.24E-08
SB-125	4.71E-01	2.00E-03	1.00E+00	9.42E-04	2.14E-04	2.02E-07
TE-127	5.88E-01	2.00E-03	1.00E+00	1.18E-03	6.26E-06	7.39E-09
TE-129	1.73E-02	2.00E-03	1.00E+00	3.46E-05	1.93E-06	6.68E-11
CS-134	6.28E-01	2.00E-03	1.00E+00	1.26E-03	1.02E-03	1.29E-06
CS-137	2.59E+00	2.00E-03	1.00E+00	5.18E-03	6.91E-04	3.58E-06
CE-141	2.82E+00	2.00E-03	1.00E+00	5.64E-03	1.84E-04	1.04E-06
CE-144	3.06E+01	2.00E-03	1.00E+00	6.12E-02	7.55E-03	4.62E-04
PR-144	3.06E+01	2.00E-03	1.00E+00	6.12E-02	9.41E-07	5.76E-08
PM-147	6.67E+00	2.00E-03	1.00E+00	1.33E-02	7.34E-04	9.76E-06
PM-148M	5.88E-01	2.00E-03	1.00E+00	1.18E-03	2.26E-04	2.67E-07
EU-155	1.80E-02	2.00E-03	1.00E+00	3.60E-05	8.42E-04	3.03E-08
U-234	3.80E-09	2.00E-03	1.00E+00	7.60E-12	2.81E+00	2.14E-11
U-235	5.10E-10	2.00E-03	1.00E+00	1.02E-12	2.59E+00	2.64E-12
U-236	4.71E-10	2.00E-03	1.00E+00	9.42E-13	2.59E+00	2.44E-12
U-238	1.33E-09	2.00E-03	1.00E+00	2.66E-12	2.59E+00	6.89E-12
N-P237	1.73E-02	2.00E-03	1.00E+00	3.46E-05	1.06E+01	3.67E-04
PU-238	2.00E+02	2.00E-03	1.00E+00	4.00E-01	9.93E+00	3.97E+00
PU-239	0.00E+00	2.00E-03	1.00E+00	0.00E+00	1.10E+01	0.00E+00
PU-240	0.00E+00	2.00E-03	1.00E+00	0.00E+00	1.10E+01	0.00E+00
PU-241	0.00E+00	2.00E-03	1.00E+00	0.00E+00	2.16E-01	0.00E+00
PU-242	0.00E+00	2.00E-03	1.00E+00	0.00E+00	1.04E+01	0.00E+00
AM-241	3.73E-03	2.00E-03	1.00E+00	7.46E-06	1.12E+01	8.36E-05
TOTAL	3.60E+02			1.02E+00		3.97E+00

Table 3H-7 Beyond Design Basis Offsite Consequences Due to an Uncontrolled Reaction, 2,450 Ci H-3, Building 772-F

Nuclide	Inventory (Ci)	Release Fraction	Filter Penetration Factor	Total Curies Released (Ci)	EDE AXAIR89Q (ground) (rem/Ci)	Consequence (rem)
H-3	2.45E+03	1.00E+00	1.00E+00	2.45E+03	2.43E-07	5.95E-04
NA-24	7.35E-01	2.00E-03	1.00E+00	1.47E-03	5.23E-06	7.69E-09
SR-91	2.94E-02	2.00E-03	1.00E+00	5.88E-05	3.87E-06	2.28E-10
SR-92	3.69E-02	2.00E-03	1.00E+00	7.38E-05	2.35E-06	1.73E-10
NP-237	2.21E-03	2.00E-03	1.00E+00	4.42E-06	1.25E+00	5.53E-06
CE-141	1.47E-03	2.00E-03	1.00E+00	2.94E-06	2.18E-05	6.41E-11
CE-143	3.69E-03	2.00E-03	1.00E+00	7.38E-06	8.26E-06	6.10E-11
TC-99	2.21E-02	2.00E-03	1.00E+00	4.42E-05	1.92E-05	8.49E-10
TOTAL	2.45E+03			2.45E+03		6.01E-04

Table 3H-8 Beyond Design Basis Onsite Consequences Due to an Uncontrolled Reaction, 2,450 Ci H-3, Building 772-F

Nuclide	Inventory (Ci)	Release Fraction	Filter Penetration Factor	Total Curies Released (Ci)	EDE AXAIR89Q (ground) (rem/Ci)	Consequence (rem)
H-3	2.45E+03	1.00E+00	1.00E+00	2.45E+03	2.05E-06	5.02E-03
NA-24	7.35E-01	2.00E-03	1.00E+00	1.47E-03	3.92E-05	5.76E-08
SR-91	2.94E-02	2.00E-03	1.00E+00	5.88E-05	3.36E-05	1.98E-09
SR-92	3.69E-02	2.00E-03	1.00E+00	7.38E-05	2.29E-05	1.69E-09
NP-237	2.21E-03	2.00E-03	1.00E+00	4.42E-06	1.06E+01	4.69E-05
CE-141	1.47E-03	2.00E-03	1.00E+00	2.94E-06	1.84E-04	5.41E-10
CE-143	3.69E-03	2.00E-03	1.00E+00	7.38E-06	7.06E-05	5.21E-10
TC-99	2.21E-02	2.00E-03	1.00E+00	4.42E-05	1.62E-04	7.16E-09
TOTAL	2.45E+03			2.45E+03		5.07E-03

Table 3H-9 Beyond Design Basis Offsite Consequences Due to a Low Energy Event, 40 Ci Alpha, Building 772-F

Nuclide	Inventory (Ci)	Release Fraction	Filter Penetration Factor	Total Curies Released (Ci)	EDE AXAIR89Q (ground) (rem/Ci)	Consequence (rem)
SR-89	4.24E-02	1.00E-04	1.00E+00	4.24E-06	9.45E-05	4.01E-10
SR-90	4.05E-03	1.00E-04	1.00E+00	4.05E-07	3.32E-03	1.34E-09
Y-90	4.05E-03	1.00E-04	1.00E+00	4.05E-07	2.07E-05	8.38E-12
Y-91	6.50E-02	1.00E-04	1.00E+00	6.50E-06	1.12E-04	7.28E-10
ZR-95	6.50E-01	1.00E-04	1.00E+00	6.50E-05	4.92E-05	3.20E-09
NB-95	4.32E-02	1.00E-04	1.00E+00	4.32E-06	1.21E-05	5.23E-11
RU-103	3.52E-02	1.00E-02	1.00E+00	3.52E-04	2.04E-05	7.18E-09
RU-106	5.20E+02	1.00E-02	1.00E+00	5.20E+00	1.12E-03	5.82E-03
AG-110M	4.12E-03	1.00E-04	1.00E+00	4.12E-07	1.38E-04	5.69E-11
SN-123	5.56E-04	1.00E-04	1.00E+00	5.56E-08	7.67E-05	4.26E-12
SB-125	7.00E-04	1.00E-04	1.00E+00	7.00E-08	2.54E-05	1.78E-12
TE-127	1.06E-03	1.00E-04	1.00E+00	1.06E-07	6.92E-07	7.34E-14
TE-129	6.63E-04	1.00E-04	1.00E+00	6.63E-08	1.37E-07	9.08E-15
CS-134	7.08E-04	1.00E-04	1.00E+00	7.08E-08	1.21E-04	8.57E-12
CS-137	5.43E-03	1.00E-04	1.00E+00	5.43E-07	8.18E-05	4.44E-11
CE-141	2.09E-02	1.00E-04	1.00E+00	2.09E-06	2.18E-05	4.56E-11
CE-144	9.75E-02	1.00E-04	1.00E+00	9.75E-06	8.94E-04	8.72E-09
PR-144	9.75E-02	1.00E-04	1.00E+00	9.75E-06	1.27E-08	1.24E-13
PM-147	1.75E-02	1.00E-04	1.00E+00	1.75E-06	8.69E-05	1.52E-10
PM-148M	2.23E-04	1.00E-04	1.00E+00	2.23E-08	2.73E-05	6.09E-13
EU-155	3.09E-04	1.00E-04	1.00E+00	3.09E-08	9.97E-05	3.08E-12
U-234	8.07E-11	1.00E-04	1.00E+00	8.07E-15	3.32E-01	2.68E-15
U-235	1.29E-09	1.00E-04	1.00E+00	1.29E-13	3.07E-01	3.96E-14
U-236	1.29E-09	1.00E-04	1.00E+00	1.29E-13	3.07E-01	3.96E-14
U-238	1.19E-07	1.00E-04	1.00E+00	1.19E-11	3.07E-01	3.65E-12
NP-237	1.72E-09	1.00E-04	1.00E+00	1.72E-13	1.25E+00	2.15E-13
PU-238	0.00E+00	1.00E-04	1.00E+00	0.00E+00	1.18E+00	0.00E+00
PU-239	4.00E+01	1.00E-04	1.00E+00	4.00E-03	1.30E+00	5.20E-03
PU-240	0.00E+00	1.00E-04	1.00E+00	0.00E+00	1.30E+00	0.00E+00
PU-241	5.00E+02	1.00E-04	1.00E+00	5.00E-02	2.56E-02	1.28E-03
PU-242	0.00E+00	1.00E-04	1.00E+00	0.00E+00	1.23E+00	0.00E+00
TOTAL	1.06E+03			5.25E+00		1.23E-02

Table 3H-10 Beyond Design Basis Onsite Consequences Due to a Low Energy Event, 40 Ci Alpha, Building 772-F

Nuclide	Inventory (Ci)	Release Fraction	Filter Penetration Factor	Total Curies Released (Ci)	EDE AXAIR89Q (ground) (rem/Ci)	Consequence (rem)
SR-89	4.24E-02	1.00E-04	1.00E+00	4.24E-06	7.98E-04	3.38E-09
SR-90	4.05E-03	1.00E-04	1.00E+00	4.05E-07	2.81E-02	1.14E-08
Y-90	4.05E-03	1.00E-04	1.00E+00	4.05E-07	1.77E-04	7.17E-11
Y-91	6.50E-02	1.00E-04	1.00E+00	6.50E-06	9.50E-04	6.18E-09
ZR-95	6.50E-01	1.00E-04	1.00E+00	6.50E-05	4.14E-04	2.69E-08
NB-95	4.32E-02	1.00E-04	1.00E+00	4.32E-06	1.01E-04	4.36E-10
RU-103	3.52E-02	1.00E-02	1.00E+00	3.52E-04	1.71E-04	6.02E-08
RU-106	5.20E+02	1.00E-02	1.00E+00	5.20E+00	9.50E-03	4.94E-02
AG-110M	4.12E-03	1.00E-04	1.00E+00	4.12E-07	1.16E-03	4.78E-10
SN-123	5.56E-04	1.00E-04	1.00E+00	5.56E-08	6.47E-04	3.60E-11
SB-125	7.00E-04	1.00E-04	1.00E+00	7.00E-08	2.14E-04	1.50E-11
TE-127	1.06E-03	1.00E-04	1.00E+00	1.06E-07	6.26E-06	6.64E-13
TE-129	6.63E-04	1.00E-04	1.00E+00	6.63E-08	1.93E-06	1.28E-13
CS-134	7.08E-04	1.00E-04	1.00E+00	7.08E-08	1.02E-03	7.22E-11
CS-137	5.43E-03	1.00E-04	1.00E+00	5.43E-07	6.91E-04	3.75E-10
CE-141	2.09E-02	1.00E-04	1.00E+00	2.09E-06	1.84E-04	3.85E-10
CE-144	9.75E-02	1.00E-04	1.00E+00	9.75E-06	7.55E-03	7.36E-08
PR-144	9.75E-02	1.00E-04	1.00E+00	9.75E-06	9.41E-07	9.17E-12
PM-147	1.75E-02	1.00E-04	1.00E+00	1.75E-06	7.34E-04	1.28E-09
PM-148M	2.23E-04	1.00E-04	1.00E+00	2.23E-08	2.26E-04	5.04E-12
EU-155	3.09E-04	1.00E-04	1.00E+00	3.09E-08	8.42E-04	2.60E-11
U-234	8.07E-11	1.00E-04	1.00E+00	8.07E-15	2.81E+00	2.27E-14
U-235	1.29E-09	1.00E-04	1.00E+00	1.29E-13	2.59E+00	3.34E-13
U-236	1.29E-09	1.00E-04	1.00E+00	1.29E-13	2.59E+00	3.34E-13
U-238	1.19E-07	1.00E-04	1.00E+00	1.19E-11	2.59E+00	3.08E-11
NP-237	1.72E-09	1.00E-04	1.00E+00	1.72E-13	1.06E+01	1.82E-12
PU-238	0.00E+00	1.00E-04	1.00E+00	0.00E+00	9.93E+00	0.00E+00
PU-239	4.00E+01	1.00E-04	1.00E+00	4.00E-03	1.10E+01	4.40E-02
PU-240	0.00E+00	1.00E-04	1.00E+00	0.00E+00	1.10E+01	0.00E+00
PU-241	5.00E+02	1.00E-04	1.00E+00	5.00E-02	2.16E-01	1.08E-02
PU-242	0.00E+00	1.00E-04	1.00E+00	0.00E+00	1.04E+01	0.00E+00
TOTAL	1.06E+03			5.25E+00		1.04E-01

Table 3H-11 Beyond Design Basis Offsite Consequences Due to a Low Energy Event, 200 Ci Pu-238, Building 772-F

Nuclide	Inventory (Ci)	Release Fraction	Filter Penetration Factor	Total Curies Released (Ci)	EDE AXAIR89Q (ground) (rem/Ci)	Consequence (rem)
SR-89	4.31E+00	1.00E-04	1.00E+00	4.31E-04	9.45E-05	4.07E-08
SR-90	9.02E-01	1.00E-04	1.00E+00	9.02E-05	3.32E-03	2.99E-07
Y-90	9.02E-01	1.00E-04	1.00E+00	9.02E-05	2.07E-05	1.87E-09
Y-91	8.24E+00	1.00E-04	1.00E+00	8.24E-04	1.12E-04	9.23E-08
ZR-95	1.61E+01	1.00E-04	1.00E+00	1.61E-03	4.92E-05	7.92E-08
NB-95	1.45E+01	1.00E-04	1.00E+00	1.45E-03	1.21E-05	1.75E-08
RU-103	7.84E+00	1.00E-02	1.00E+00	7.84E-02	2.04E-05	1.60E-06
RU-106	3.02E+01	1.00E-02	1.00E+00	3.02E-01	1.12E-03	3.38E-04
AG-110M	1.02E+00	1.00E-04	1.00E+00	1.02E-04	1.38E-04	1.41E-08
SN-123	1.73E-02	1.00E-04	1.00E+00	1.73E-06	7.67E-05	1.33E-10
SB-125	4.71E-01	1.00E-04	1.00E+00	4.71E-05	2.54E-05	1.20E-09
TE-127	5.88E-01	1.00E-04	1.00E+00	5.88E-05	6.92E-07	4.07E-11
TE-129	1.73E-02	1.00E-04	1.00E+00	1.73E-06	1.37E-07	2.37E-13
CS-134	6.28E-01	1.00E-04	1.00E+00	6.28E-05	1.21E-04	7.60E-09
CS-137	2.59E+00	1.00E-04	1.00E+00	2.59E-04	8.18E-05	2.12E-08
CE-141	2.82E+00	1.00E-04	1.00E+00	2.82E-04	2.18E-05	6.15E-09
CE-144	3.06E+01	1.00E-04	1.00E+00	3.06E-03	8.94E-04	2.74E-06
PR-144	3.06E+01	1.00E-04	1.00E+00	3.06E-03	1.27E-08	3.89E-11
PM-147	6.67E+00	1.00E-04	1.00E+00	6.67E-04	8.69E-05	5.80E-08
PM-148M	5.88E-01	1.00E-04	1.00E+00	5.88E-05	2.73E-05	1.61E-09
EU-155	1.80E-02	1.00E-04	1.00E+00	1.80E-06	9.97E-05	1.79E-10
U-234	3.80E-09	1.00E-04	1.00E+00	3.80E-13	3.32E-01	1.26E-13
U-235	5.10E-10	1.00E-04	1.00E+00	5.10E-14	3.07E-01	1.57E-14
U-236	4.71E-10	1.00E-04	1.00E+00	4.71E-14	3.07E-01	1.45E-14
U-238	1.33E-09	1.00E-04	1.00E+00	1.33E-13	3.07E-01	4.08E-14
NP-237	1.73E-02	1.00E-04	1.00E+00	1.73E-06	1.25E+00	2.16E-06
PU-238	2.00E+02	1.00E-04	1.00E+00	2.00E-02	1.18E+00	2.36E-02
PU-239	0.00E+00	1.00E-04	1.00E+00	0.00E+00	1.30E+00	0.00E+00
PU-240	0.00E+00	1.00E-04	1.00E+00	0.00E+00	1.30E+00	0.00E+00
PU-241	0.00E+00	1.00E-04	1.00E+00	0.00E+00	2.56E-02	0.00E+00
PU-242	0.00E+00	1.00E-04	1.00E+00	0.00E+00	1.23E+00	0.00E+00
AM-241	3.73E-03	1.00E-04	1.00E+00	3.73E-07	1.33E+00	4.96E-07
TOTAL	3.60E+02			4.13E-01		2.39E-02

Table 3H-12 Beyond Design Basis Onsite Consequences Due to a Low Energy Event, 200 Ci Pu-238, Building 772-F

Nuclide	Inventory (Ci)	Release Fraction	Filter Penetration Factor	Total Curies Released (Ci)	EDE AXAIR89Q (ground) (rem/Ci)	Consequence (rem)
SR-89	4.31E+00	1.00E-04	1.00E+00	4.31E-04	7.98E-04	3.44E-07
SR-90	9.02E-01	1.00E-04	1.00E+00	9.02E-05	2.81E-02	2.53E-06
Y-90	9.02E-01	1.00E-04	1.00E+00	9.02E-05	1.77E-04	1.60E-08
Y-91	8.24E+00	1.00E-04	1.00E+00	8.24E-04	9.50E-04	7.83E-07
ZR-95	1.61E+01	1.00E-04	1.00E+00	1.61E-03	4.14E-04	6.67E-07
NB-95	1.45E+01	1.00E-04	1.00E+00	1.45E-03	1.01E-04	1.46E-07
RU-103	7.84E+00	1.00E-02	1.00E+00	7.84E-02	1.71E-04	1.34E-05
RU-106	3.02E+01	1.00E-02	1.00E+00	3.02E-01	9.50E-03	2.87E-03
AG-110M	1.02E+00	1.00E-04	1.00E+00	1.02E-04	1.16E-03	1.18E-07
SN-123	1.73E-02	1.00E-04	1.00E+00	1.73E-06	6.47E-04	1.12E-09
SB-125	4.71E-01	1.00E-04	1.00E+00	4.71E-05	2.14E-04	1.01E-08
TE-127	5.88E-01	1.00E-04	1.00E+00	5.88E-05	6.26E-06	3.68E-10
TE-129	1.73E-02	1.00E-04	1.00E+00	1.73E-06	1.93E-06	3.34E-12
CS-134	6.28E-01	1.00E-04	1.00E+00	6.28E-05	1.02E-03	6.41E-08
CS-137	2.59E+00	1.00E-04	1.00E+00	2.59E-04	6.91E-04	1.79E-07
CE-141	2.82E+00	1.00E-04	1.00E+00	2.82E-04	1.84E-04	5.19E-08
CE-144	3.06E+01	1.00E-04	1.00E+00	3.06E-03	7.55E-03	2.31E-05
PR-144	3.06E+01	1.00E-04	1.00E+00	3.06E-03	9.41E-07	2.88E-09
PM-147	6.67E+00	1.00E-04	1.00E+00	6.67E-04	7.34E-04	4.90E-07
PM-148M	5.88E-01	1.00E-04	1.00E+00	5.88E-05	2.26E-04	1.33E-08
EU-155	1.80E-02	1.00E-04	1.00E+00	1.80E-06	8.42E-04	1.52E-09
U-234	3.80E-09	1.00E-04	1.00E+00	3.80E-13	2.81E+00	1.07E-12
U-235	5.10E-10	1.00E-04	1.00E+00	5.10E-14	2.59E+00	1.32E-13
U-236	4.71E-10	1.00E-04	1.00E+00	4.71E-14	2.59E+00	1.22E-13
U-238	1.33E-09	1.00E-04	1.00E+00	1.33E-13	2.59E+00	3.44E-13
NP-237	1.73E-02	1.00E-04	1.00E+00	1.73E-06	1.06E+01	1.83E-05
PU-238	2.00E+02	1.00E-04	1.00E+00	2.00E-02	9.93E+00	1.99E-01
PU-239	0.00E+00	1.00E-04	1.00E+00	0.00E+00	1.10E+01	0.00E+00
PU-240	0.00E+00	1.00E-04	1.00E+00	0.00E+00	1.10E+01	0.00E+00
PU-241	0.00E+00	1.00E-04	1.00E+00	0.00E+00	2.16E-01	0.00E+00
PU-242	0.00E+00	1.00E-04	1.00E+00	0.00E+00	1.04E+01	0.00E+00
AM-241	3.73E-03	1.00E-04	1.00E+00	3.73E-07	1.12E+01	4.18E-06
TOTAL	3.60E+02			4.13E-01		2.02E-01

Table 3H-13 Beyond Design Basis Offsite Consequences Due to a Low Energy Event, 2,450 Ci H-3, Building 772-F

Nuclide	Inventory (Ci)	Release Fraction	Filter Penetration Factor	Total Curies Released (Ci)	EDE AXAIR89Q (ground) (rem/Ci)	Consequence (rem)
H-3	2.45E+03	1.00E+00	1.00E+00	2.45E+03	2.43E-07	5.95E-04
NA-24	7.35E-01	1.00E-04	1.00E+00	7.35E-05	5.23E-06	3.84E-10
SR-91	2.94E-02	1.00E-04	1.00E+00	2.94E-06	3.87E-06	1.14E-11
SR-92	3.69E-02	1.00E-04	1.00E+00	3.69E-06	2.35E-06	8.67E-12
NP-237	2.21E-02	1.00E-04	1.00E+00	2.21E-06	1.25E+00	2.76E-06
CE-141	1.47E-03	1.00E-04	1.00E+00	1.47E-07	2.18E-05	3.20E-12
CE-143	3.69E-03	1.00E-04	1.00E+00	3.69E-07	8.26E-06	3.05E-12
TC-99	2.21E-02	1.00E-04	1.00E+00	2.21E-06	1.92E-05	4.24E-11
TOTAL	2.45E+03			2.45E+03		5.98E-04

Table 3H-14 Beyond Design Basis Onsite Consequences Due to a Low Energy Event, 2,450 Ci H-3, Building 772-F

Nuclide	Inventory (Ci)	Release Fraction	Filter Penetration Factor	Total Curies Released (Ci)	EDE AXAIR89Q (ground) (rem/Ci)	Consequence (rem)
H-3	2.45E+03	1.00E+00	1.00E+00	2.45E+03	2.05E-06	5.02E-03
NA-24	7.35E-01	1.00E-04	1.00E+00	7.35E-05	3.92E-05	2.88E-09
SR-91	2.94E-02	1.00E-04	1.00E+00	2.94E-06	3.36E-05	9.88E-11
SR-92	3.69E-02	1.00E-04	1.00E+00	3.69E-06	2.29E-05	8.45E-11
NP-237	2.21E-02	1.00E-04	1.00E+00	2.21E-06	1.06E+01	2.34E-05
CE-141	1.47E-03	1.00E-04	1.00E+00	1.47E-07	1.84E-04	2.70E-11
CE-143	3.69E-03	1.00E-04	1.00E+00	3.69E-07	7.06E-05	2.61E-11
TC-99	2.21E-02	1.00E-04	1.00E+00	2.21E-06	1.62E-04	3.58E-10
TOTAL	2.45E+03			2.45E+03		5.04E-03

Table 3H-15 Beyond Design Basis Offsite Consequences Due to a Low Energy Event on the Service Floor of Building 772-F

Nuclide	Inventory (Ci)	Release Fraction	Filter Penetration Factor	Total Curies Released (Ci)	EDE AXAIR89Q (ground) (rem/Ci)	Consequence (rem)
H-3	2.71E+03	1.00E+00	1.00E+00	2.71E+03	2.51E-07	6.79E-04
NA-24	7.35E-01	1.00E-04	1.00E+00	7.35E-05	5.40E-06	3.97E-10
SR-91	2.94E-02	1.00E-04	1.00E+00	2.94E-06	4.00E-06	1.18E-11
SR-92	3.69E-02	1.00E-04	1.00E+00	3.69E-06	2.44E-06	9.00E-12
NP-237	2.44E-02	1.00E-04	1.00E+00	2.44E-06	1.29E+00	3.15E-06
CE-141	1.47E-03	1.00E-04	1.00E+00	1.47E-07	2.25E-05	3.31E-12
CE-143	3.69E-03	1.00E-04	1.00E+00	3.69E-07	8.54E-06	3.15E-12
TC-99	2.21E-02	1.00E-04	1.00E+00	2.21E-06	1.98E-05	4.38E-11
TOTAL	2.71E+03			2.71E+03		6.83E-04

Table 3H-16 Beyond Design Basis Onsite Consequences Due to a Low Energy Event on the Service Floor of Building 772-F

Nuclide	Inventory (Ci)	Release Fraction	Filter Penetration Factor	Total Curies Released (Ci)	EDE AXAIR89Q (ground) (rem/Ci)	Consequence (rem)
H-3	2.71E+03	1.00E+00	1.00E+00	2.71E+03	2.05E-06	5.55E-03
NA-24	7.35E-01	1.00E-04	1.00E+00	7.35E-05	3.92E-05	2.88E-09
SR-91	2.94E-02	1.00E-04	1.00E+00	2.94E-06	3.36E-05	9.88E-11
SR-92	3.69E-02	1.00E-04	1.00E+00	3.69E-06	2.29E-05	8.45E-11
NP-237	2.44E-02	1.00E-04	1.00E+00	2.44E-06	1.06E+01	2.59E-05
CE-141	1.47E-03	1.00E-04	1.00E+00	1.47E-07	1.84E-04	2.70E-11
CE-143	3.69E-03	1.00E-04	1.00E+00	3.69E-07	7.06E-05	2.61E-11
TC-99	2.21E-02	1.00E-04	1.00E+00	2.21E-06	1.62E-04	3.58E-10
TOTAL	2.71E+03			2.71E+03		5.58E-03

Table 3H-17 Beyond Design Basis Offsite Consequences Due to a Glovebox Explosion in Building 772-1F[a]

Nuclide	Inventory (Ci)	Release Fraction	Filter Penetration Factor	Total Curies Released (Ci)	MACCS TEDE (ground) (rem/Ci)	Consequence (rem)
Pu-239	5 E+00	1.00 E+00	1.00 E+00	5 E+00	9.88 E-02	4.94 E-01
Pu-239 eq[a]	47 E+00	1.5 E-03	1.00 E+00	7 E-02	9.88 E-02	6.92 E-03
TOTAL				5.07 E+00		5.01 E-01

[a] This table is a representative selection of important isotopes found in Building 772-F converted to a Pu-239 dose equivalent (37 Ci alpha, 500 Ci Pu-241, 210 Ci beta/gamma (Sr-90) and 100 Ci tritium).

Table 3H-18 Beyond Design Basis Onsite Consequences Due to a Glovebox Explosion in Building 772-1F[a]

Nuclide	Inventory (Ci)	Release Fraction	Filter Penetration Factor	Total Curies Released (Ci)	MACCS TEDE (ground) (rem/Ci)	Consequence (rem)
Pu-239	5 E+00	1.00 E+00	1.00 E+00	5 E+00	2.70 E+01	1.35 E+00
Pu-239 eq[a]	47 E+00	1.5 E-03	1.00 E+00	7 E-02	2.70 E+01	1.89 E+00
TOTAL				5.07 E+00		1.37 E+02

[a] This table is a representative selection of important isotopes found in Building 772-F converted to a Pu-239 dose equivalent (37 Ci alpha, 500 Ci Pu-241, 210 Ci beta/gamma (Sr-90) and 100 Ci tritium).

Table 3H-19 Beyond Design Basis Offsite Consequences Due to an Uncontrolled Reaction in Building 772-1F

Nuclide	Inventory (Ci)	Release Fraction	Filter Penetration Factor	Total Curies Released (Ci)	EDE AXAIR89Q (ground) (rem/Ci)	Consequence (rem)
H-3	1.00E+02	1.00E+00	1.00E+00	1.00E+02	2.51E-07	2.51E-05
RU-106[a]	2.10E+02	1.00E-02	1.00E+00	2.10E+00	1.16E-03	2.44E-03
PU-239[b]	4.20E+01	2.00E-03	1.00E+00	8.40E-02	1.35E+00	1.13E-01
PU-241	5.00E+02	2.00E-03	1.00E+00	1.00E+00	2.64E-02	2.64E-02
TOTAL	8.52E+02			1.03E+02		1.42E-01

[a] 210 Ci of Ru-106 are conservatively assumed

[b] 42 Ci of Pu-239 are conservatively assumed

Table 3H-20 Beyond Design Basis Offsite Consequences Due to an Uncontrolled Reaction in Building 772-1F

Nuclide	Inventory (Ci)	Release Fraction	Filter Penetration Factor	Total Curies Released (Ci)	EDE AXAIR89Q (ground) (rem/Ci)	Consequence (rem)
H-3	1.00E+02	1.00E+00	1.00E+00	1.00E+02	2.05E-06	2.05E-04
RU-106[a]	2.10E+02	1.00E-02	1.00E+00	2.10E+00	9.50E-03	2.00E-02
PU-239[b]	4.20E+01	2.00E-03	1.00E+00	8.40E-02	1.10E+01	9.24E-01
PU-241	5.00E+02	2.00E-03	1.00E+00	1.00E+00	2.16E-01	2.16E-01
TOTAL	8.52E+02			1.03E+02		1.16E+00

[a] 210 Ci of Ru-106 are conservatively assumed

[b] 42 Ci of Pu-239 are conservatively assumed

Table 3H-21 Beyond Design Basis Offsite Consequences Due to a Low Energy Event in Building 772-1F

Nuclide	Inventory (Ci)	Release Fraction	Filter Penetration Factor	Total Curies Released (Ci)	EDE AXAIR89Q (ground) (rem/Ci)	Consequence (rem)
H-3	1.00E+02	1.00E+00	1.00E+00	1.00E+02	2.51E-07	2.51E-05
RU-106[a]	2.10E+02	1.00E-02	1.00E+00	2.10E+00	1.16E-03	2.44E-03
PU-239[b]	4.20E+01	1.00E-04	1.00E+00	4.20E-03	1.35E+00	5.67E-03
PU-241	5.00E+02	1.00E-04	1.00E+00	5.00E-02	2.64E-02	1.32E-03
TOTAL	8.52E+02			1.02E+02		9.45E-03

[a] 210 Ci of Ru-106 are conservatively assumed

[b] 42 Ci of Pu-239 are conservatively assumed

Table 3H-22 Beyond Design Basis Onsite Consequences Due to a Low Energy Event in Building 772-1F

Nuclide	Inventory (Ci)	Release Fraction	Filter Penetration Factor	Total Curies Released (Ci)	EDE AXAIR89Q (ground) (rem/Ci)	Consequence (rem)
H-3	1.00E+02	1.00E+00	1.00E+00	1.00E+02	2.05E-06	2.05E-04
RU-106[a]	2.10E+02	1.00E-02	1.00E+00	2.10E+00	9.50E-03	2.00E-02
PU-239[b]	4.20E+01	1.00E-04	1.00E+00	4.20E-03	1.10E+01	4.62E-02
PU-241	5.00E+02	1.00E-04	1.00E+00	5.00E-02	2.16E-01	1.08E-02
TOTAL	8.52E+02			1.02E+02		7.72E-02

[a] 210 Ci of Ru-106 are conservatively assumed

[b] 42 Ci of Pu-239 are conservatively assumed

Table 3H-23 Offsite Consequences Due to a Criticality Accident in Building 772-F, Stack Release

Nuclide	Inventory (Ci)	Release Fraction	Filter Penetration Factor	Source Term (Ci)	EDE (rem)	Consequence (rem)
Kr-83m	1.10E+02	1.00E+00	1.00E+00	1.10E+02	6.58E-10	6.58E-10
Kr-85m	7.10E+01	1.00E+00	1.00E+00	7.10E+01	4.60E-06	4.60E-06
Kr-85	8.10E-04	1.00E+00	1.00E+00	8.10E-04	7.96E-13	7.96E-13
Kr-87	4.30E+02	1.00E+00	1.00E+00	4.30E+02	9.23E-05	9.23E-05
Rb-87[a]		1.00E+00	1.00E+00		1.31E-18	1.31E-18
Kr-88	2.30E+02	1.00E+00	1.00E+00	2.30E+02	1.43E-04	1.43E-04
Rb-88[a]		1.00E+00	1.00E+00		4.74E-05	4.74E-05
Kr-89	1.30E+04	1.00E+00	1.00E+00	1.30E+04	2.27E-05	2.27E-05
Rb-89[a]		1.00E+00	1.00E+00		6.79E-04	6.79E-04
Sr-89[a]		1.00E+00	1.00E+00		1.70E-05	1.70E-05
Xe-131m	1.00E-01	1.00E+00	1.00E+00	1.00E-01	8.17E-10	8.17E-10
I-131	1.10E+01	2.50E-01	1.00E+00	2.75E+00	4.30E-04	1.08E-04
I-132	1.20E+03	2.50E-01	1.00E+00	3.00E+02	1.33E-03	3.33E-04
I-133	1.60E+02	2.50E-01	1.00E+00	4.00E+01	1.42E-04	3.55E-05
Xe-133m	2.20E+00	1.00E+00	1.00E+00	2.20E+00	3.87E-08	3.87E-08
Xe-133	2.70E+01	1.00E+00	1.00E+00	2.70E+01	5.84E-07	5.84E-07
I-134	4.30E+03	2.50E-01	1.00E+00	1.08E+03	3.27E-03	8.18E-04
I-135	4.50E+02	2.50E-01	1.00E+00	1.13E+02	8.22E-04	2.06E-04
Xe-135m	3.30E+03	1.00E+00	1.00E+00	3.30E+03	1.58E-04	1.58E-04
Xe-135	4.10E+02	1.00E+00	1.00E+00	4.10E+02	5.00E-05	5.00E-05
Xe-137	4.90E+04	1.00E+00	1.00E+00	4.90E+04	2.56E-05	2.56E-05
Cs-137[a]		1.00E+00	1.00E+00		4.57E-07	4.57E-07
Xe-138	1.10E+04	1.00E+00	1.00E+00	1.10E+04	1.04E-03	1.04E-03
Cs-138[a]		1.00E+00	1.00E+00		2.37E-03	2.37E-03
Pu-239	2.50E-02	1.00E+00	4.90E-05	1.23E-06	1.55E-02	7.60E-07
Am-241	2.40E-05	1.00E+00	4.90E-05	1.18E-09	1.52E-05	7.45E-10
TOTAL						6.15E-03

[a] Represents daughter nuclides. As such, there is no associated inventory or source term. Also, daughter nuclides may be born after the parent has passed through the HEPA filters. Therefore, no filter penetration factor is applied to daughter nuclides.

Table 3H-24 Onsite Consequences Due to a Criticality Accident in Building 772-F, Stack Release

Nuclide	Inventory (Ci)	Release Fraction	Filter Penetration Factor	Source Term (Ci)	EDE (rem)	Consequence (rem)
Kr-83m	1.10E+02	1.00E+00	1.00E+00	1.10E+02	2.65E-09	2.65E-09
Kr-85m	7.10E+01	1.00E+00	1.00E+00	7.10E+01	2.33E-05	2.33E-05
Kr-85	8.10E-04	1.00E+00	1.00E+00	8.10E-04	3.69E-12	3.69E-12
Kr-87	4.30E+02	1.00E+00	1.00E+00	4.30E+02	5.91E-04	5.91E-04
Rb-87[a]		1.00E+00	1.00E+00		1.16E-18	1.16E-18
Kr-88	2.30E+02	1.00E+00	1.00E+00	2.30E+02	8.12E-04	8.12E-04
Rb-88[a]		1.00E+00	1.00E+00		8.62E-05	8.62E-05
Kr-89	1.30E+04	1.00E+00	1.00E+00	1.30E+04	8.36E-03	8.36E-03
Rb-89[a]		1.00E+00	1.00E+00		7.00E-03	7.00E-03
Sr-89[a]		1.00E+00	1.00E+00		1.29E-05	1.29E-05
Xe-131m	1.00E-01	1.00E+00	1.00E+00	1.00E-01	3.02E-09	3.02E-09
I-131	1.10E+01	2.50E-01	1.00E+00	2.75E+00	1.41E-03	3.53E-04
I-132	1.20E+03	2.50E-01	1.00E+00	3.00E+02	6.65E-03	1.66E-03
I-133	1.60E+02	2.50E-01	1.00E+00	4.00E+01	5.34E-04	1.34E-04
Xe-133m	2.20E+00	1.00E+00	1.00E+00	2.20E+00	1.64E-07	1.64E-07
Xe-133	2.70E+01	1.00E+00	1.00E+00	2.70E+01	2.41E-06	2.41E-06
I-134	4.30E+03	2.50E-01	1.00E+00	1.08E+03	2.15E-02	5.38E-03
I-135	4.50E+02	2.50E-01	1.00E+00	1.13E+02	3.27E-03	8.18E-04
Xe-135m	3.30E+03	1.00E+00	1.00E+00	3.30E+03	2.03E-03	2.03E-03
Xe-135	4.10E+02	1.00E+00	1.00E+00	4.10E+02	2.21E-04	2.21E-04
Xe-137	4.90E+04	1.00E+00	1.00E+00	4.90E+04	4.54E-03	4.54E-03
Cs-137[a]		1.00E+00	1.00E+00		1.13E-06	1.13E-06
Xe-138	1.10E+04	1.00E+00	1.00E+00	1.10E+04	1.60E-02	1.60E-02
Cs-138[a]		1.00E+00	1.00E+00		6.62E-03	6.62E-03
Pu-239	2.50E-02	1.00E+00	4.90E-05	1.23E-06	5.07E-02	2.48E-06
Am-241	2.40E-05	1.00E+00	4.90E-05	1.18E-09	4.96E-05	2.43E-09
TOTAL						5.46E-02

[a] Represents daughter nuclides. As such, there is no associated inventory or source term. Also, daughter nuclides may be born after the parent has passed through the HEPA filters. Therefore, no filter penetration factor is applied to daughter nuclides.

Table 3H-25 Offsite Consequences Due to a Criticality Accident in Building 772-F, Ground Release

Nuclide	Inventory (Ci)	Release Fraction	Filter Penetration Factor	Source Term (Ci)	EDE (rem)	Consequence (rem)
Kr-83m	1.10E+02	1.00E+00	1.00E+00	1.10E+02	1.29E-09	1.29E-09
Kr-85m	7.10E+01	1.00E+00	1.00E+00	7.10E+01	9.16E-06	9.16E-06
Kr-85	8.10E-04	1.00E+00	1.00E+00	8.10E-04	1.79E-12	1.79E-12
Kr-87	4.30E+02	1.00E+00	1.00E+00	4.30E+02	1.53E-04	1.53E-04
Rb-87[a]		1.00E+00	1.00E+00		4.48E-18	4.48E-18
Kr-88	2.30E+02	1.00E+00	1.00E+00	2.30E+02	2.71E-04	2.71E-04
Rb-88[a]		1.00E+00	1.00E+00		1.19E-04	1.19E-04
Kr-89	1.30E+04	1.00E+00	1.00E+00	1.30E+04	1.16E-07	1.16E-07
Rb-89[a]		1.00E+00	1.00E+00		4.28E-04	4.28E-04
Sr-89[a]		1.00E+00	1.00E+00		4.72E-05	4.72E-05
Xe-131m	1.00E-01	1.00E+00	1.00E+00	1.00E-01	1.87E-09	1.87E-09
I-131	1.10E+01	2.50E-01	1.00E+00	2.75E+00	8.85E-04	2.21E-04
I-132	1.20E+03	2.50E-01	1.00E+00	3.00E+02	2.45E-03	6.13E-04
I-133	1.60E+02	2.50E-01	1.00E+00	4.00E+01	2.91E-04	7.28E-05
Xe-133m	2.20E+00	1.00E+00	1.00E+00	2.20E+00	8.61E-08	8.61E-08
Xe-133	2.70E+01	1.00E+00	1.00E+00	2.70E+01	1.30E-06	1.30E-06
I-134	4.30E+03	2.50E-01	1.00E+00	1.08E+03	4.85E-03	1.21E-03
I-135	4.50E+02	2.50E-01	1.00E+00	1.13E+02	1.63E-03	4.08E-04
Xe-135m	3.30E+03	1.00E+00	1.00E+00	3.30E+03	1.17E-04	1.17E-04
Xe-135	4.10E+02	1.00E+00	1.00E+00	4.10E+02	1.10E-04	1.10E-04
Xe-137	4.90E+04	1.00E+00	1.00E+00	4.90E+04	3.80E-07	3.80E-07
Cs-137[a]		1.00E+00	1.00E+00		9.51E-07	9.51E-07
Xe-138	1.10E+04	1.00E+00	1.00E+00	1.10E+04	5.80E-04	5.80E-04
Cs-138[a]		1.00E+00	1.00E+00		3.98E-03	3.98E-03
Pu-239	2.50E-02	1.00E+00	1.00E+00	2.50E-02	3.20E-02	3.20E-02
Am-241	2.40E-05	1.00E+00	1.00E+00	2.40E-05	3.13E-05	3.13E-05
TOTAL						4.04E-02

[a] Represents daughter nuclides. As such, there is no associated inventory or source term.

Table 3H-26 Onsite Consequences Due to a Criticality in Building 772-F, Ground Release

Nuclide	Inventory (Ci)	Release Fraction	Filter Penetration Factor	Source Term (Ci)	EDE (rem)	Consequence (rem)
Kr-83m	1.10E+02	1.00E+00	1.00E+00	1.10E+02	1.54E-08	1.54E-08
Kr-85m	7.10E+01	1.00E+00	1.00E+00	7.10E+01	6.53E-05	6.53E-05
Kr-85	8.10E-04	1.00E+00	1.00E+00	8.10E-04	9.96E-12	9.96E-12
Kr-87	4.30E+02	1.00E+00	1.00E+00	4.30E+02	1.60E-03	1.60E-03
Rb-87[a]		1.00E+00	1.00E+00		2.54E-18	2.54E-18
Kr-88	2.30E+02	1.00E+00	1.00E+00	2.30E+02	2.14E-03	2.14E-03
Rb-88[a]		1.00E+00	1.00E+00		1.20E-04	1.20E-04
Kr-89	1.30E+04	1.00E+00	1.00E+00	1.30E+04	5.96E-02	5.96E-02
Rb-89[a]		1.00E+00	1.00E+00		1.30E-02	1.30E-02
Sr-89[a]		1.00E+00	1.00E+00		1.57E-05	1.57E-05
Xe-131m	1.00E-01	1.00E+00	1.00E+00	1.00E-01	1.51E-08	1.51E-08
I-131	1.10E+01	2.50E-01	1.00E+00	2.75E+00	7.62E-03	1.91E-03
I-132	1.20E+03	2.50E-01	1.00E+00	3.00E+02	2.25E-02	5.63E-03
I-133	1.60E+02	2.50E-01	1.00E+00	4.00E+01	2.38E-03	5.95E-04
Xe-133m	2.20E+00	1.00E+00	1.00E+00	2.20E+00	6.04E-07	6.04E-07
Xe-133	2.70E+01	1.00E+00	1.00E+00	2.70E+01	8.72E-06	8.72E-06
I-134	4.30E+03	2.50E-01	1.00E+00	1.08E+03	6.59E-02	1.65E-02
I-135	4.50E+02	2.50E-01	1.00E+00	1.13E+02	1.41E-02	3.53E-03
Xe-135m	3.30E+03	1.00E+00	1.00E+00	3.30E+03	6.81E-03	6.81E-03
Xe-135	4.10E+02	1.00E+00	1.00E+00	4.10E+02	5.89E-04	5.89E-04
Xe-137		1.00E+00	1.00E+00		3.44E-06	3.44E-06
Cs-137[a]	4.90E+04	1.00E+00	1.00E+00	4.90E+04	2.82E-02	2.82E-02
Xe-138		1.00E+00	1.00E+00		8.68E-03	8.68E-03
Cs-138[a]	1.10E+04	1.00E+00	1.00E+00	1.10E+04	5.24E-02	5.24E-02
Pu-239	2.50E-02	1.00E+00	1.00E+00	2.50E-02	2.75E-01	2.75E-01
Am-241	2.40E-05	1.00E+00	1.00E+00	2.40E-05	2.69E-04	2.69E-04
TOTAL						4.77E-01

[a] Represents daughter nuclides. As such, there is no associated inventory or source term.

Table 3H-27 Offsite Consequences Due to a Release of 200 Ci of Pu-238, Beyond Design Basis Earthquake, Building 772-F

Nuclide	Inventory (Ci)	Release Fraction	Filter Penetration Factor	Total Curies Released (Ci)	EDE AXAIR89Q (ground) (rem/Ci)	Consequence (rem)
SR-89	4.31E+00	2.00E-03	1.00E+00	8.62E-03	9.77E-05	8.42E-07
SR-90	9.02E-01	2.00E-03	1.00E+00	1.80E-03	3.43E-03	6.17E-06
Y-90	9.02E-01	2.00E-03	1.00E+00	1.80E-03	2.14E-05	3.85E-08
Y-91	8.24E+00	2.00E-03	1.00E+00	1.65E-02	1.16E-04	1.91E-06
ZR-95	1.61E+01	2.00E-03	1.00E+00	3.22E-02	5.08E-05	1.64E-06
NB-95	1.45E+01	2.00E-03	1.00E+00	2.90E-02	1.25E-05	3.63E-07
RU-103	7.84E+00	1.00E-02	1.00E+00	7.84E-02	2.10E-05	1.65E-06
RU-106	3.02E+01	1.00E-02	1.00E+00	3.02E-01	1.16E-03	3.50E-04
AG-110M	1.02E+00	2.00E-03	1.00E+00	2.04E-03	1.42E-04	2.90E-07
SN-123	1.73E-02	2.00E-03	1.00E+00	3.46E-05	7.92E-05	2.74E-09
SB-125	4.71E-01	2.00E-03	1.00E+00	9.42E-04	2.63E-05	2.48E-08
TE-127	5.88E-01	2.00E-03	1.00E+00	1.18E-03	7.16E-07	8.45E-10
TE-129	1.73E-02	2.00E-03	1.00E+00	3.46E-05	1.44E-07	4.98E-12
CS-134	6.28E-01	2.00E-03	1.00E+00	1.26E-03	1.26E-04	1.59E-07
CS-137	2.59E+00	2.00E-03	1.00E+00	5.18E-03	8.45E-05	4.38E-07
CE-141	2.82E+00	2.00E-03	1.00E+00	5.64E-03	2.25E-05	1.27E-07
CE-144	3.06E+01	2.00E-03	1.00E+00	6.12E-02	9.24E-04	5.65E-05
PR-144	3.06E+01	2.00E-03	1.00E+00	6.12E-02	1.40E-08	8.57E-10
PM-147	6.67E+00	2.00E-03	1.00E+00	1.33E-02	8.98E-05	1.19E-06
PM-148M	5.88E-01	2.00E-03	1.00E+00	1.18E-03	2.82E-05	3.33E-08
EU-154	1.80E-02	2.00E-03	1.00E+00	3.60E-05	6.88E-04	2.48E-08
U-234	3.80E-09	2.00E-03	1.00E+00	7.60E-12	3.43E-01	2.61E-12
U-235	5.10E-10	2.00E-03	1.00E+00	1.02E-12	3.17E-01	3.23E-13
U-236	4.71E-10	2.00E-03	1.00E+00	9.42E-13	3.17E-01	2.99E-13
U-238	1.33E-09	2.00E-03	1.00E+00	2.66E-12	3.17E-01	8.43E-13
NP-237	1.73E-02	2.00E-03	1.00E+00	3.46E-05	1.29E+00	4.46E-05
PU-238	2.00E+02	2.00E-03	1.00E+00	4.00E-01	1.21E+00	4.84E-01
PU-239	0.00E+00	2.00E-03	1.00E+00	0.00E+00	1.35E+00	0.00E+00
PU-240	0.00E+00	2.00E-03	1.00E+00	0.00E+00	1.35E+00	0.00E+00
PU-241	0.00E+00	2.00E-03	1.00E+00	0.00E+00	2.64E-02	0.00E+00
PU-242	0.00E+00	2.00E-03	1.00E+00	0.00E+00	1.27E+00	0.00E+00
AM-241	3.73E-03	2.00E-03	1.00E+00	7.46E-06	1.37E+00	1.02E-05
TOTAL	3.60E+02			1.02E+00		4.84E-01

Table 3H-28 Onsite Consequences Due to a Release of 200 Ci of Pu-238, Beyond Design Basis Earthquake, Building 772-F

Nuclide	Inventory (Ci)	Release Fraction	Filter Penetration Factor	Total Curies Released (Ci)	EDE AXAIR89Q (ground) (rem/Ci)	Consequence (rem)
SR-89	4.31E+00	2.00E-03	1.00E+00	8.62E-03	7.98E-04	6.88E-06
SR-90	9.02E-01	2.00E-03	1.00E+00	1.80E-03	2.81E-02	5.06E-05
Y-90	9.02E-01	2.00E-03	1.00E+00	1.80E-03	1.77E-04	3.19E-07
Y-91	8.24E+00	2.00E-03	1.00E+00	1.65E-02	9.50E-04	1.57E-05
ZR-95	1.61E+01	2.00E-03	1.00E+00	3.22E-02	4.14E-04	1.33E-05
NB-95	1.45E+01	2.00E-03	1.00E+00	2.90E-02	1.01E-04	2.93E-06
RU-103	7.84E+00	1.00E-02	1.00E+00	7.84E-02	1.71E-04	1.34E-05
RU-106	3.02E+01	1.00E-02	1.00E+00	3.02E-01	9.50E-03	2.87E-03
AG-110M	1.02E+00	2.00E-03	1.00E+00	2.04E-03	1.16E-03	2.37E-06
SN-123	1.73E-02	2.00E-03	1.00E+00	3.46E-05	6.47E-04	2.24E-08
SB-125	4.71E-01	2.00E-03	1.00E+00	9.42E-04	2.14E-04	2.02E-07
TE-127	5.88E-01	2.00E-03	1.00E+00	1.18E-03	6.26E-06	7.39E-09
TE-129	1.73E-02	2.00E-03	1.00E+00	3.46E-05	1.93E-06	6.68E-11
CS-134	6.28E-01	2.00E-03	1.00E+00	1.26E-03	1.02E-03	1.29E-06
CS-137	2.59E+00	2.00E-03	1.00E+00	5.18E-03	6.91E-04	3.58E-06
CE-141	2.82E+00	2.00E-03	1.00E+00	5.64E-03	1.84E-04	1.04E-06
CE-144	3.06E+01	2.00E-03	1.00E+00	6.12E-02	7.55E-03	4.62E-04
PR-144	3.06E+01	2.00E-03	1.00E+00	6.12E-02	9.41E-07	5.76E-08
PM-147	6.67E+00	2.00E-03	1.00E+00	1.33E-02	7.34E-04	9.76E-06
PM-148M	5.88E-01	2.00E-03	1.00E+00	1.18E-03	2.26E-04	2.67E-07
EU-154	1.80E-02	2.00E-03	1.00E+00	3.60E-05	5.62E-03	2.02E-07
U-234	3.80E-09	2.00E-03	1.00E+00	7.60E-12	2.81E+00	2.14E-11
U-235	5.10E-10	2.00E-03	1.00E+00	1.02E-12	2.59E+00	2.64E-12
U-236	4.71E-10	2.00E-03	1.00E+00	9.42E-13	2.59E+00	2.44E-12
U-238	1.33E-09	2.00E-03	1.00E+00	2.66E-12	2.59E+00	6.89E-12
NP-237	1.73E-02	2.00E-03	1.00E+00	3.46E-05	1.06E+01	3.67E-04
PU-238	2.00E+02	2.00E-03	1.00E+00	4.00E-01	9.93E+00	3.97E+00
PU-239	0.00E+00	2.00E-03	1.00E+00	0.00E+00	1.10E+01	0.00E+00
PU-240	0.00E+00	2.00E-03	1.00E+00	0.00E+00	1.10E+01	0.00E+00
PU-241	0.00E+00	2.00E-03	1.00E+00	0.00E+00	2.16E-01	0.00E+00
PU-242	0.00E+00	2.00E-03	1.00E+00	0.00E+00	1.04E+01	0.00E+00
AM-241	3.73E-03	2.00E-03	1.00E+00	7.46E-06	1.12E+01	8.36E-05
TOTAL	3.60E+02			1.02E+00		3.97E+00

Table 3H-29 Offsite Consequences Due to a Release of 200 Ci of Plutonium Type 50 Material, Beyond Design Basis Earthquake, Building 772-F

Nuclide	Inventory (Ci)	Release Fraction	Filter Penetration Factor	Total Curies Released (Ci)	EDE AXAIR89Q (ground) (rem/Ci)	Consequence (rem)
SR-89	2.12E-01	2.00E-03	1.00E+00	4.25E-04	9.77E-05	4.15E-08
SR-90	2.03E-02	2.00E-03	1.00E+00	4.06E-05	3.43E-03	1.39E-07
Y-90	2.03E-02	2.00E-03	1.00E+00	4.06E-05	2.14E-05	8.69E-10
Y-91	3.26E-01	2.00E-03	1.00E+00	6.52E-04	1.16E-04	7.56E-08
ZR-95	3.26E+00	2.00E-03	1.00E+00	6.52E-03	5.08E-05	3.31E-07
NB-95	2.17E-01	2.00E-03	1.00E+00	4.33E-04	1.25E-05	5.41E-09
RU-103	1.76E-01	1.00E-02	1.00E+00	1.76E-03	2.10E-05	3.71E-08
RU-106	2.60E+03	1.00E-02	1.00E+00	2.60E+01	1.16E-03	3.02E-02
AG-110M	2.06E-02	2.00E-03	1.00E+00	4.12E-05	1.42E-04	5.86E-09
SN-123	2.78E-03	2.00E-03	1.00E+00	5.57E-06	7.92E-05	4.41E-10
SB-125	3.51E-03	2.00E-03	1.00E+00	7.01E-06	2.63E-05	1.84E-10
TE-127	5.30E-03	2.00E-03	1.00E+00	1.06E-05	7.16E-07	7.59E-12
TE-129	3.32E-03	2.00E-03	1.00E+00	6.64E-06	1.44E-07	9.56E-13
CS-134	3.55E-03	2.00E-03	1.00E+00	7.09E-06	1.26E-04	8.94E-10
CS-137	2.72E-02	2.00E-03	1.00E+00	5.44E-05	8.45E-05	4.60E-09
CE-141	1.05E-01	2.00E-03	1.00E+00	2.10E-04	2.25E-05	4.72E-09
CE-144	4.89E-01	2.00E-03	1.00E+00	9.77E-04	9.24E-04	9.03E-07
PR-144	4.89E-01	2.00E-03	1.00E+00	9.77E-04	1.40E-08	1.37E-11
PM-147	8.76E-02	2.00E-03	1.00E+00	1.75E-04	8.98E-05	1.57E-08
PM-148M	1.12E-03	2.00E-03	1.00E+00	2.23E-06	2.82E-05	6.30E-11
EU-155	1.55E-03	2.00E-03	1.00E+00	3.09E-06	1.03E-04	3.19E-10
U-234	4.04E-10	2.00E-03	1.00E+00	8.08E-13	3.43E-01	2.77E-13
U-235	6.47E-09	2.00E-03	1.00E+00	1.29E-11	3.17E-01	4.10E-12
U-236	6.47E-09	2.00E-03	1.00E+00	1.29E-11	3.17E-01	4.10E-12
U-238	5.98E-07	2.00E-03	1.00E+00	1.20E-09	3.17E-01	3.79E-10
NP-237	8.60E-09	2.00E-03	1.00E+00	1.72E-11	1.29E+00	2.22E-11
PU-238	0.00E+00	2.00E-03	1.00E+00	0.00E+00	1.21E+00	0.00E+00
PU-239	1.08E+02	2.00E-03	1.00E+00	2.16E-01	1.35E+00	2.92E-01
PU-240	9.20E+01	2.00E-03	1.00E+00	1.84E-01	1.35E+00	2.48E-01
PU-241	1.80E+03	2.00E-03	1.00E+00	3.60E+00	2.64E-02	9.50E-02
PU-242	0.00E+00	2.00E-03	1.00E+00	0.00E+00	1.27E+00	0.00E+00
TOTAL	4.61E+03			3.00E+01		6.65E-01

Table 3H-30 Onsite Consequences Due to a Release or 200 Ci of Plutonium Type 50 Material, Beyond Design Basis Earthquake, Building 772-F

Nuclide	Inventory (Ci)	Release Fraction	Filter Penetration Factor	Total Curies Released (Ci)	EDE AXAIR89Q (ground) (rem/Ci)	Consequence (rem)
SR-89	2.12E-01	2.00E-03	1.00E+00	4.25E-04	7.98E-04	3.39E-07
SR-90	2.03E-02	2.00E-03	1.00E+00	4.06E-05	2.81E-02	1.14E-06
Y-90	2.03E-02	2.00E-03	1.00E+00	4.06E-05	1.77E-04	7.19E-09
Y-91	3.26E-01	2.00E-03	1.00E+00	6.52E-04	9.50E-04	6.19E-07
ZR-95	3.26E+00	2.00E-03	1.00E+00	6.52E-03	4.14E-04	2.70E-06
NB-95	2.17E-01	2.00E-03	1.00E+00	4.33E-04	1.01E-04	4.37E-08
RU-103	1.76E-01	1.00E-02	1.00E+00	1.76E-03	1.71E-04	3.02E-07
RU-106	2.60E+03	1.00E-02	1.00E+00	2.60E+01	9.50E-03	2.47E-01
AG-110M	2.06E-02	2.00E-03	1.00E+00	4.12E-05	1.16E-03	4.78E-08
SN-123	2.78E-03	2.00E-03	1.00E+00	5.57E-06	6.47E-04	3.60E-09
SB-125	3.51E-03	2.00E-03	1.00E+00	7.01E-06	2.14E-04	1.50E-09
TE-127	5.30E-03	2.00E-03	1.00E+00	1.06E-05	6.26E-06	6.63E-11
TE-129	3.32E-03	2.00E-03	1.00E+00	6.64E-06	1.93E-06	1.28E-11
CS-134	3.55E-03	2.00E-03	1.00E+00	7.09E-06	1.02E-03	7.24E-09
CS-137	2.72E-02	2.00E-03	1.00E+00	5.44E-05	6.91E-04	3.76E-08
CE-141	1.05E-01	2.00E-03	1.00E+00	2.10E-04	1.84E-04	3.86E-08
CE-144	4.89E-01	2.00E-03	1.00E+00	9.77E-04	7.55E-03	7.38E-06
PR-144	4.89E-01	2.00E-03	1.00E+00	9.77E-04	9.41E-07	9.20E-10
PM-147	8.76E-02	2.00E-03	1.00E+00	1.75E-04	7.34E-04	1.29E-07
PM-148M	1.12E-03	2.00E-03	1.00E+00	2.23E-06	2.26E-04	5.05E-10
EU-155	1.55E-03	2.00E-03	1.00E+00	3.09E-06	8.42E-04	2.60E-09
U-234	4.04E-10	2.00E-03	1.00E+00	8.08E-13	2.81E+00	2.27E-12
U-235	6.47E-09	2.00E-03	1.00E+00	1.29E-11	2.59E+00	3.35E-11
U-236	6.47E-09	2.00E-03	1.00E+00	1.29E-11	2.59E+00	3.35E-11
U-238	5.98E-07	2.00E-03	1.00E+00	1.20E-09	2.59E+00	3.10E-09
NP-237	8.60E-09	2.00E-03	1.00E+00	1.72E-11	1.06E+01	1.82E-10
PU-238	0.00E+00	2.00E-03	1.00E+00	0.00E+00	9.93E+00	0.00E+00
PU-239	1.08E+02	2.00E-03	1.00E+00	2.16E-01	1.10E+01	2.38E+00
PU-240	9.20E+01	2.00E-03	1.00E+00	1.84E-01	1.10E+01	2.02E+00
PU-241	1.80E+03	2.00E-03	1.00E+00	3.60E+00	2.16E-01	7.78E-01
PU-242	0.00E+00	2.00E-03	1.00E+00	0.00E+00	1.04E+01	0.00E+00
TOTAL	4.61E+03			3.00E+01		5.42E+00

Table 3H-31 Offsite Consequences Due to a Release of 10,570 Ci of Tritium, Beyond Design Basis Earthquake, Building 772-F

Nuclide	Inventory (Ci)	Release Fraction	Filter Penetration Factor	Total Curies Released (Ci)	EDE AXAIR89Q (ground) (rem/Ci)	Consequence (rem)
H-3	1.06E+04	1.00E+00	1.00E+00	1.06E+04	2.51E-07	2.65E-03
NA-24	7.35E-01	1.00E-04	1.00E+00	7.35E-05	5.40E-06	3.97E-10
SR-91	2.94E-02	1.00E-04	1.00E+00	2.94E-06	4.00E-06	1.18E-11
SR-92	3.69E-02	1.00E-04	1.00E+00	3.69E-06	2.44E-06	9.00E-12
TC-99	2.21E-02	1.00E-04	1.00E+00	2.21E-06	1.98E-05	4.38E-11
CE-141	6.34E-03	1.00E-04	1.00E+00	6.34E-07	2.25E-05	1.43E-11
CE-143	3.69E-03	1.00E-04	1.00E+00	3.69E-07	8.54E-06	3.15E-12
NP-237	9.53E-02	1.00E-04	1.00E+00	9.53E-06	1.29E+00	1.23E-05
TOTAL	1.06E+04			1.06E+04		2.67E-03

Table 3H-32 Onsite Consequences Due to a Release of 10,570 Ci of Tritium, Beyond Design Basis Earthquake, Building 772-F

Nuclide	Inventory (Ci)	Release Fraction	Filter Penetration Factor	Total Curies Released (Ci)	EDE AXAIR89Q (ground) (rem/Ci)	Consequence (rem)
H-3	1.06E+04	1.00E+00	1.00E+00	1.06E+04	2.05E-06	2.17E-02
NA-24	7.35E-01	1.00E-04	1.00E+00	7.35E-05	3.92E-05	2.88E-09
SR-91	2.94E-02	1.00E-04	1.00E+00	2.94E-06	3.36E-05	9.88E-11
SR-92	3.69E-02	1.00E-04	1.00E+00	3.69E-06	2.29E-05	8.45E-11
TC-99	2.21E-02	1.00E-04	1.00E+00	2.21E-06	1.62E-04	3.58E-10
CE-141	6.34E-03	1.00E-04	1.00E+00	6.34E-07	1.84E-04	1.17E-10
CE-143	3.69E-03	1.00E-04	1.00E+00	3.69E-07	7.06E-05	2.61E-11
NP-237	9.53E-02	1.00E-04	1.00E+00	9.53E-06	1.06E+01	1.01E-04
TOTAL	1.06E+04			1.06E+04		2.18E-02

Table 3H-33 DELETED

Table 3H-34 DELETED

Table 3H-35 DELETED

Table 3H-36 DELETED

Table 3H-37 Offsite Consequences Due to a Release of the Estimated Building 772-4F Inventory, Beyond Design Basis Earthquake

Nuclide	Inventory (Ci)	Release Fraction	Filter Penetration Factor	Total Curies Released (Ci)	EDE AXAIR89Q (ground) (rem/Ci)	Consequence (rem)
SR-90	7.45E-03	2.00E-03	1.00E+00	1.49E-05	3.43E-03	5.11E-08
CS-134	5.45E-03	2.00E-03	1.00E+00	1.09E-05	1.26E-04	1.37E-09
CS-137	3.63E-02	2.00E-03	1.00E+00	7.26E-05	8.45E-05	6.13E-09
CE-144	8.10E-03	2.00E-03	1.00E+00	1.62E-05	9.24E-04	1.50E-08
U-235	3.00E-04	2.00E-03	1.00E+00	6.00E-07	3.17E-01	1.90E-07
PU-238	3.72E-02	2.00E-03	1.00E+00	7.44E-05	1.21E+00	9.00E-05
PU-239	4.10E-03	2.00E-03	1.00E+00	8.20E-06	1.35E+00	1.11E-05
AM-241	8.50E-04	2.00E-03	1.00E+00	1.70E-06	1.37E+00	2.33E-06
CM-244	1.00E-04	2.00E-03	1.00E+00	2.00E-07	7.13E-01	1.43E-07
TOTAL	9.99E-02			2.00E-04		1.04E-04

Table 3H-38 Onsite Consequences Due to a Release of the Estimated Building 772-4F Inventory, Beyond Design Basis Earthquake

Nuclide	Inventory (Ci)	Release Fraction	Filter Penetration Factor	Total Curies Released (Ci)	EDE AXAIR89Q (ground) (rem/Ci)	Consequence (rem)
SR-90	7.45E-03	2.00E-03	1.00E+00	1.49E-05	2.81E-02	4.19E-07
CS-134	5.45E-03	2.00E-03	1.00E+00	1.09E-05	1.02E-03	1.11E-08
CS-137	3.63E-02	2.00E-03	1.00E+00	7.26E-05	6.91E-04	5.02E-08
CE-144	8.10E-03	2.00E-03	1.00E+00	1.62E-05	7.55E-03	1.22E-07
U-235	3.00E-04	2.00E-03	1.00E+00	6.00E-07	2.59E+00	1.55E-06
PU-238	3.72E-02	2.00E-03	1.00E+00	7.44E-05	9.93E+00	7.39E-04
PU-239	4.10E-03	2.00E-03	1.00E+00	8.20E-06	1.10E+01	9.02E-05
AM-241	8.50E-04	2.00E-03	1.00E+00	1.70E-06	1.12E+01	1.90E-05
CM-244	1.00E-04	2.00E-03	1.00E+00	2.00E-07	5.83E+00	1.17E-06
TOTAL	9.99E-02			2.00E-04		8.52E-04

Table 3H-39 Offsite Consequences Due to an F2 Tornado (RF=1.0), Beyond Design Basis Tornado, Building 772-F

	Tornado Chi/Q	Breathing Rate	Released Activity	Inhalation Dose Factor	Inhalation CEDE
Radionuclide	(sec/m3)	(m3/sec)	(Curies)	(rem/Curie)	(rem)
H-3	3.00E-07	3.33E-04	1.06E+04	9.60E+01	1.01E-04
Sr-90	3.00E-07	3.33E-04	2.60E+03	1.30E+06	3.37E-01
WPu-241	3.00E-07	3.33E-04	3.72E+03	8.25E+06	3.07E+00
Am-241	3.00E-07	3.33E-04	3.10E+02	4.44E+08	1.38E+01
				TOTAL:	1.72E+01

Table 3H-40 Onsite Consequences Due to an F2 Tornado (RF=1.0), Beyond Design Basis Tornado, Building 772-F

Radionuclide	Tornado Chi/Q (sec/m3)	Breathing Rate (m3/sec)	Released Activity (Curies)	Inhalation Dose Factor (rem/Curie)	Inhalation CEDE (rem)
H-3	6.00E-07	3.33E-04	1.06E+04	9.60E+01	2.03E-04
Sr-90	6.00E-07	3.33E-04	2.60E+03	1.30E+06	6.75E-01
WPu-241	6.00E-07	3.33E-04	3.72E+03	8.25E+06	6.13E+00
Am-241	6.00E-07	3.33E-04	3.10E+02	4.44E+08	2.75E+01
				TOTAL:	3.43E+01

Table 3H-41: DELETED

Table 3H-42 Offsite Consequences Due to a Release of 200 Ci of Pu-238 (RF=0.1), Beyond Design Basis Tornado, Building 772-F

Nuclide	Inventory (Ci)	Release Fraction	Total Curies Released (Ci)	EDE AXAOTHER (rem/Ci)	Consequence (rem)
SR-89	4.31E+00	1.00E-01	4.31E-01	4.22E-06	1.82E-06
SR-90	9.02E-01	1.00E-01	9.02E-02	1.48E-04	1.33E-05
Y-90	9.02E-01	1.00E-01	9.02E-02	9.32E-07	8.41E-08
Y-91	8.24E+00	1.00E-01	8.24E-01	5.02E-06	4.14E-06
ZR-95	1.61E+01	1.00E-01	1.61E+00	2.20E-06	3.54E-06
NB-95	1.45E+01	1.00E-01	1.45E+00	5.51E-07	7.99E-07
RU-103	7.84E+00	1.00E-01	7.84E-01	9.13E-07	7.16E-07
RU-106	3.02E+01	1.00E-01	3.02E+00	5.02E-05	1.52E-04
AG-110M	1.02E+00	1.00E-01	1.02E-01	6.18E-06	6.30E-07
SN-123	1.73E-02	1.00E-01	1.73E-03	3.42E-06	5.92E-09
SB-125	4.71E-01	1.00E-01	4.71E-02	1.13E-06	5.32E-08
TE-127	5.88E-01	1.00E-01	5.88E-02	3.23E-08	1.90E-09
TE-129	1.73E-02	1.00E-01	1.73E-03	8.87E-09	1.53E-11
CS-134	6.28E-01	1.00E-01	6.28E-02	5.44E-06	3.42E-07
CS-137	2.59E+00	1.00E-01	2.59E-01	3.65E-06	9.45E-07
CE-141	2.82E+00	1.00E-01	2.82E-01	9.74E-07	2.75E-07
CE-144	3.06E+01	1.00E-01	3.06E+00	4.00E-05	1.22E-04
PR-144	3.06E+01	1.00E-01	3.06E+00	2.38E-09	7.28E-09
PM-147	6.67E+00	1.00E-01	6.67E-01	3.88E-06	2.59E-06
PM-148M	5.88E-01	1.00E-01	5.88E-02	1.21E-06	7.11E-08
EU-154	1.80E-02	1.00E-01	1.80E-03	2.97E-05	5.35E-08
U-234	3.80E-09	1.00E-01	3.80E-10	1.48E-02	5.62E-12
U-235	5.10E-10	1.00E-01	5.10E-11	1.37E-02	6.99E-13
U-236	4.71E-10	1.00E-01	4.71E-11	1.37E-02	6.45E-13
U-238	1.33E-09	1.00E-01	1.33E-10	1.37E-02	1.82E-12
NP-237	1.73E-02	1.00E-01	1.73E-03	5.59E-02	9.67E-05
PU-238	2.00E+02	1.00E-01	2.00E+01	5.25E-02	1.05E+00
PU-239	0.00E+00	1.00E-01	0.00E+00	5.82E-02	0.00E+00
PU-240	0.00E+00	1.00E-01	0.00E+00	5.82E-02	0.00E+00
PU-241	0.00E+00	1.00E-01	0.00E+00	1.14E-03	0.00E+00
PU-242	0.00E+00	1.00E-01	0.00E+00	5.48E-02	0.00E+00
AM-241	3.73E-03	1.00E-01	3.73E-04	5.94E-02	2.22E-05
TOTAL	3.90E+02		3.60E+01		1.05E+00

Table 3H-43 Offsite Consequences Due to a Release of 200 Ci of Type 50 Material (RF= 0.1), Beyond Design Basis Tornado, Building 772-F

Nuclide	Inventory (Ci)	Release Fraction	Total Curies Released (Ci)	EDE AXAOTHER (rem/Ci)	Consequence (rem)
SR-89	2.12E-01	1.00E-01	2.12E-02	4.22E-06	8.96E-08
SR-90	2.60E+03	1.00E-01	2.60E+02	1.48E-04	3.85E-02
Y-90	2.03E-02	1.00E-01	2.03E-03	9.32E-07	1.89E-09
Y-91	3.26E-01	1.00E-01	3.26E-02	5.02E-06	1.64E-07
ZR-95	3.26E+00	1.00E-01	3.26E-01	2.20E-06	7.17E-07
NB-95	2.17E-01	1.00E-01	2.17E-02	5.51E-07	1.19E-08
RU-103	1.76E-01	1.00E-01	1.76E-02	9.13E-07	1.61E-08
RU-106	1.79E-01	1.00E-01	1.79E-02	5.02E-05	8.98E-07
AG-110M	2.06E-02	1.00E-01	2.06E-03	6.18E-06	1.27E-08
SN-123	2.78E-03	1.00E-01	2.78E-04	3.42E-06	9.52E-10
SB-125	3.51E-03	1.00E-01	3.51E-04	1.13E-06	3.96E-10
TE-127	5.30E-03	1.00E-01	5.30E-04	3.23E-08	1.71E-11
TE-129	3.32E-03	1.00E-01	3.32E-04	8.87E-09	2.94E-12
CS-134	3.55E-03	1.00E-01	3.55E-04	5.44E-06	1.93E-09
CS-137	2.72E-02	1.00E-01	2.72E-03	3.65E-06	9.93E-09
CE-141	1.05E-01	1.00E-01	1.05E-02	9.74E-07	1.02E-08
CE-144	4.89E-01	1.00E-01	4.89E-02	4.00E-05	1.95E-06
PR-144	4.89E-01	1.00E-01	4.89E-02	2.38E-09	1.16E-10
PM-147	8.76E-02	1.00E-01	8.76E-03	3.88E-06	3.40E-08
PM-148M	1.12E-03	1.00E-01	1.12E-04	1.21E-06	1.35E-10
EU-155	1.55E-03	1.00E-01	1.55E-04	4.45E-06	6.88E-10
U-234	4.04E-10	1.00E-01	4.04E-11	1.48E-02	5.98E-13
U-235	6.47E-09	1.00E-01	6.47E-10	1.37E-02	8.87E-12
U-236	6.47E-09	1.00E-01	6.47E-10	1.37E-02	8.87E-12
U-238	5.98E-07	1.00E-01	5.98E-08	1.37E-02	8.19E-10
NP-237	8.60E-09	1.00E-01	8.60E-10	5.59E-02	4.81E-11
PU-238	0.00E+00	1.00E-01	0.00E+00	5.25E-02	0.00E+00
PU-239	1.08E+02	1.00E-01	1.08E+01	5.82E-02	6.29E-01
PU-240	9.20E+01	1.00E-01	9.20E+00	5.82E-02	5.35E-01
PU-241	1.80E+03	1.00E-01	1.80E+02	1.14E-03	2.05E-01
PU-242	0.00E+00	1.00E-01	0.00E+00	5.48E-02	0.00E+00
TOTAL	4.61E+03		4.61E+02		1.41E+00

Table 3H-44 Offsite Consequences Due to a Release of 10,570 Curies of Tritium (RF=0.1), Beyond Design Basis Tornado, Building 772-F

Nuclide	Inventory (Ci)	Release Fraction	Total Curies Released (Ci)	EDE AXAOTHER (rem/Ci)	Consequence (rem)
H-3	1.06E+04	1.00E-01	1.06E+03	1.08E-08	1.14E-05
NA-24	3.17E+00	1.00E-01	3.17E-01	3.95E-07	1.25E-07
SR-91	1.27E-01	1.00E-01	1.27E-02	1.88E-07	2.39E-09
TC-99	9.53E-02	1.00E-01	9.53E-03	8.56E-07	8.16E-09
CE-141	6.34E-03	1.00E-01	6.34E-04	9.74E-07	6.18E-10
CE-143	1.59E-02	1.00E-01	1.59E-03	3.75E-07	5.96E-10
NP-237	9.53E-02	1.00E-01	9.53E-03	5.59E-02	5.33E-04
TOTAL	1.06E+04		1.06E+03		5.44E-04

Table 3H-45 DELETED

Table 3H-46 DELETED

Table 3H-47 DELETED

Table 3H-48 DELETED

Table 3H-49 Offsite Consequences Due to a Beyond Design Basis Straight Wind at Building 772-4F

Nuclide	Inventory (Ci)	Release Fraction	Total Curies Released (Ci)	EDE AXAOTHER (rem/Ci)	Consequence (rem)
SR-90	7.45E-03	1.00E+00	7.45E-03	1.53E-05	1.14E-07
CS-134	5.45E-03	1.00E+00	5.45E-03	5.62E-07	3.06E-09
CS-137	3.63E-02	1.00E+00	3.63E-02	3.77E-07	1.37E-08
CE-144	8.10E-03	1.00E+00	8.10E-03	4.13E-06	3.35E-08
U-235	3.00E-04	1.00E+00	3.00E-04	1.42E-03	4.26E-07
PU-238	3.72E-02	1.00E+00	3.72E-02	5.43E-03	2.02E-04
PU-239	4.10E-03	1.00E+00	4.10E-03	6.02E-03	2.47E-05
AM-241	8.50E-04	1.00E+00	8.50E-04	6.13E-03	5.21E-06
CM-244	1.00E-04	1.00E+00	1.00E-04	3.18E-03	3.18E-07
TOTAL	9.99E-02		9.99E-02		2.33E-04

Table 3H-50 Offsite Consequences Due to a Beyond Design Basis Tornado at Building 772-4F

Nuclide	Inventory (Ci)	Release Fraction	Total Curies Released (Ci)	EDE AXAOTHER (rem/Ci)	Consequence (rem)
SR-90	7.45E-03	1.00E+00	7.45E-03	1.48E-04	1.10E-06
CS-134	5.45E-03	1.00E+00	5.45E-03	5.44E-06	2.96E-08
CS-137	3.63E-02	1.00E+00	3.63E-02	3.65E-06	1.32E-07
CE-144	8.10E-03	1.00E+00	8.10E-03	4.00E-05	3.24E-07
U-235	3.00E-04	1.00E+00	3.00E-04	1.37E-02	4.11E-06
PU-238	3.72E-02	1.00E+00	3.72E-02	5.25E-02	1.95E-03
PU-239	4.10E-03	1.00E+00	4.10E-03	5.82E-02	2.39E-04
AM-241	8.50E-04	1.00E+00	8.50E-04	5.94E-02	5.05E-05
CM-244	1.00E-04	1.00E+00	1.00E-04	3.08E-02	3.08E-06
TOTAL	9.99E-02		9.99E-02		2.25E-03

Table 3H-51 Releases Due to a Sample Tunnel Spill

SAMPLE TUNNEL SPILL – BOUNDING ESTIMATE

SITUATION	MAR (Ci)	DR	ARF	RF	LPF	AMOUNT AIRBORNE (CI)
AM-241						
LIQUID						
BOILING	0.00E+00	1.00E+00	1.00E-03	1.00E+00	2.00E-01	0
BURNING	0.00E+00	1.00E+00	1.00E-02	1.00E+00	2.00E-01	0
FALLING	3.10E+02	1.00E+00	1.00E-04	1.00E+00	1.00E+00	0.031
RESIDUE						
FALLING	0.00E+00	0.00E+00	3.00E-04	1.00E-05	2.00E-01	0
CHARRING INERT	0	1	2.00E-04	1.00E-05	0.2	0
CHARRING PLASTIC	0.00E+00	0.05	3.60E-02	1.00E-05	2.00E-01	0
DEBRIS FALLING ON	0	1	4.00E-04	1.00E-05	0.2	0
RESUSPENSION	0	1	9.60E-06	1	0.2	0
TOTAL AM-241						0.031
PU-241						
LIQUID						
BOILING	0.00E+00	1.00E+00	1.00E-03	1.00E+00	2.00E-01	0
BURNING	0.00E+00	1.00E+00	1.00E-02	1.00E+00	2.00E-01	0
FALLING	3.72E+03	1.00E+00	1.00E-04	1.00E+00	1.00E+00	0.372
RESIDUE						
FALLING	0.00E+00	0.00E+00	3.00E-04	1.00E-05	2.00E-01	0
CHARRING INERT	0.00E+00	1.00E+00	2.00E-04	1.00E-05	2.00E-01	0
CHARRING PLASTIC	0.00E+00	5.00E-02	3.60E-02	1.00E-05	2.00E-01	0
DEBRIS FALLING ON	0	1.00E+00	4.00E-04	1.00E-05	2.00E-01	0
RESUSPENSION	0.00E+00	1.00E+00	9.60E-06	1.00E+00	2.00E-01	0
TOTAL PU-241						0.372
RU-106						
LIQUID						
BOILING	0	1.00E+00	1.00E-03	1.00E+00	2.00E-01	0
BURNING	0	1.00E+00	1.00E-02	1.00E+00	2.00E-01	0
FALLING	2600	1.00E+00	1.00E-02	1.00E+00	1.00E+00	26
RESIDUE	0					
FALLING	0	0.00E+00	3.00E-04	1.00E-05	2.00E-01	0
CHARRING INERT	0	1.00E+00	2.00E-04	1.00E-05	2.00E-01	0
CHARRING PLASTIC	0	5.00E-02	3.60E-02	1.00E-05	2.00E-01	0
DEBRIS FALLING ON	0	1.00E+00	4.00E-04	1.00E-05	2.00E-01	0
RESUSPENSION	0	1.00E+00	9.60E-06	1.00E+00	2.00E-01	0
TOTAL RU-106						26
TOTAL H-3 (WATER)	2450	1.00E+00	1.00E+00	1.00E+00	1.00E+00	2450

Table 3H-52 Offsite and Onsite Consequences Due to a Sample Tunnel Spill (Ref.42)

Sample Tunnel Spill	Maximum Dose (rem)
Onsite OEP at 100 m	9.29E+00
MOI (9.4 km)	7.08E-03

**CENTRAL LABORATORY FACILITY -
BUILDINGS 772-F, 772-1F, AND 772-4F
SAFETY ANALYSIS REPORT**

CHAPTER 4

SAFETY STRUCTURES, SYSTEMS, AND COMPONENTS

August 2010

Savannah River
Nuclear Solutions, LLC
A Fluor Daniel Partnership

DISCLAIMER

This document was prepared by Savannah River Nuclear Solutions LLC (SRNS), under contract with the United States Department of Energy (DOE).

Release to and Use by Third Parties. As it pertains to releases of this document to third parties, and the use of or reference to this document by such third parties in whole or in part, neither SRNS, DOE, nor their respective officers, directors, employees, agents, consultants or personal services contractors (i) make any warranty, expressed or implied, (ii) assume any legal liability or responsibility for the accuracy, completeness, or usefulness, of any information, apparatus, product or process disclosed herein or (iii) represent that use of the same will not infringe privately owned rights. Reference herein to any specific commercial product, process, or service by trademark, name, manufacture or otherwise, does not necessarily constitute or imply endorsement, recommendation, or favoring of the same by SRNS, DOE or their respective officers, directors, employees, agents, consultants or personal services contractors. The views and opinions of the authors expressed herein do not necessarily state or reflect those of the United States Government or any agency thereof.

CONTENTS

Page

4.0 SAFETY STRUCTURES, SYSTEMS, AND COMPONENTS 4.1-1

4.1 INTRODUCTION 4.1-1

4.2 REQUIREMENTS 4.2-1

4.3 SAFETY CLASS STRUCTURES, SYSTEMS, AND COMPONENTS 4.3-1

4.4 SAFETY SIGNIFICANT STRUCTURES, SYSTEMS, AND COMPONENTS 4.4-1

4.4.1 Building 772-F 4.4-1

4.4.1.1 Safety Function 4.4-1

4.4.1.2 System Description 4.4-1

4.4.1.3 Functional Requirements 4.4-2

4.4.1.4 System Evaluation 4.4-2

4.4.1.5 Technical Safety Requirement Controls 4.4-2

4.4.2 Building 772-1F 4.4-3

4.4.2.1 Safety Function 4.4-3

4.4.2.2 System Description 4.4-3

4.4.2.3 Functional Requirements 4.4-4

4.4.2.4 System Evaluation 4.4-4

4.4.2.5 Technical Safety Requirement Controls 4.4-4

4.4.3 Building 772-4F 4.4-4

4.4.3.1 Safety Function 4.4-4

4.4.3.2 System Description 4.4-5

4.4.3.3 Functional Requirements 4.4-5

CONTENTS (continued)

Page

4.4.3.4 System Evaluation 4.4-5

4.4.3.5 Technical Safety Requirement Controls 4.4-5

4.4.4 772-F/772-1F Gloveboxes 4.4-5

4.4.4.1 Safety Function 4.4-5

4.4.4.2 System Description 4.4-5

4.4.4.3 Functional Requirements 4.4-6

4.4.4.4 System Evaluation 4.4-6

4.4.4.5 Technical Safety Requirement Controls 4.4-6

4.4.5 772-F/772-1F Shielded Cells 4.4-7

4.4.5.1 Safety Function 4.4-7

4.4.5.2 System Description 4.4-7

4.4.5.3 Functional Requirements 4.4-7

4.4.5.4 System Evaluation 4.4-8

4.4.5.5 Technical Safety Requirement Controls 4.4-8

4.4.6 Main Exhaust System (Building 772-F) 4.4-8

4.4.6.1 Safety Function 4.4-8

4.4.6.2 System Description 4.4-9

4.4.6.3 Functional Requirements 4.4-9

4.4.6.4 System Evaluation 4.4-9

4.4.6.5 Technical Safety Requirement Controls 4.4-9

4.4.7 Deleted 4.4-10

4.4.8 Off Gas Exhaust System (Building 772-F) 4.4-10

CONTENTS (continued)

Page

4.4.8.1 Safety Function 4.4-10
4.4.8.2 System Description 4.4-10
4.4.8.3 Functional Requirements 4.4-10
4.4.8.4 System Evaluation 4.4-10
4.4.8.5 Technical Safety Requirement Controls 4.4-10
4.4.9 Interior walls (Buildings 772-F and 772-1F) 4.4-11
4.4.9.1 Safety Function 4.4-11
4.4.9.2 System Description 4.4-11
4.4.9.3 Functional Requirements 4.4-11
4.4.9.4 System Evaluation 4.4-11
4.4.9.5 Technical Safety Requirement Controls 4.4-12
4.4.10 Building 772-F Sprinkler System 4.4-12
4.4.10.1 Safety Function 4.4-12
4.4.10.2 System Description 4.4-12
4.4.10.3 Functional Requirements 4.4-13
4.4.10.4 System Evaluation 4.4-14
4.4.10.5 Technical Safety Requirement Controls 4.4-14
4.4.11 Building 772-1F Sprinkler System 4.4-15
4.4.11.1 Safety Function 4.4-15
4.4.11.2 System Description 4.4-15
4.4.11.3 Functional Requirements 4.4-16
4.4.11.4 System Evaluation 4.4-16

CONTENTS (continued)

Page

4.4.11.5 Technical Safety Requirement Controls 4.4-17

4.5 SPECIFIC ADMINISTRATIVE CONTROLS 4.5-1

4.5.1 Hydrogen Control (TSR SAC 5.7.3.4)..... 4.5-1

4.5.1.1 Safety Function 4.5-1

4.5.1.2 Specific Administrative Control Description..... 4.5-1

4.5.1.3 Functional Requirements 4.5-2

4.5.1.4 Specific Administrative Control Evaluation..... 4.5-2

4.5.1.5 Technical Safety Requirement Controls 4.5-2

4.5.2 Deleted 4.5-2

4.5.3 Hazardous Material Inventory Facility Limits - radiological (TSR SAC 5.7.3.1.1.)..... 4.5-2

4.5.3.1 Safety Function 4.5-2

4.5.3.2 Specific Administrative Control Description..... 4.5-3

4.5.3.3 Functional Requirements 4.5-3

4.5.3.4 Specific Administrative Control Evaluation..... 4.5-3

4.5.3.5 Technical Safety Requirement Controls 4.5-4

4.5.4 Material Inventory Volatile Organic Compound Laboratory Module Limit – (TSR SAC 5.7.3.1.2) 4.5-4

4.5.4.1 Safety Function 4.5-4

4.5.4.2 Specific Administrative Control Description..... 4.5-4

4.5.4.3 Functional Requirements 4.5-4

4.5.4.4 Specific Administrative Control Evaluation..... 4.5-4

4.5.4.5 Technical Safety Requirement Controls 4.5-5

CONTENTS (continued)

Page

4.5.5 Flashing Spray Release Susceptible Container Limits - Radiological 4.5-5

4.5.5.1 Safety Function 4.5-5

4.5.5.2 Specific Administrative Control Description 4.5-5

4.5.5.3 Functional Requirements 4.5-6

4.5.5.4 Specific Administrative Control Evaluation 4.5-6

4.5.5.5 Technical Safety Requirement Controls 4.5-6

4.6 REFERENCES 4.6-1

4.7 TABLES 4.7-1

4.8 FIGURES 4.8-1

TABLES

Page

4.4-1 Safety Significant Structures, Systems and Components 4.7-1

4.5-1 Specific Administrative Controls..... 4.7-6

ACRONYMS AND ABBREVIATIONS

CFR	Code of Federal Regulations
Ci	curie
CMU	Concrete Masonry Units
DBA	Design Basis Accident
DF	Decontamination Factor
DOE	Department of Energy
DSA	Documented Safety Analysis
F/H Lab	F/H Area Laboratory
g	acceleration of gravity
HC	Hazard Category
HEPA	High-Efficiency Particulate Air
lb/ft^2	pounds per square foot
MAR	Material at Risk
mph	miles per hour
OGE	Off Gas Exhaust
PGA	Peak Ground Acceleration
Pu	Plutonium
SAC	Specific Administrative Control
SAR	Safety Analysis Report
SRNS	Savannah River Nuclear Solutions
SSC	Structure, System, and Component
STD	Standard
TEXT	Temporary Emergency Exhaust Treatment
TQ	Threshold Quantity
TSR	Technical Safety Requirements
VOC	Volatile Organic Compounds
WSRC	Washington Savannah River Company

4.0 SAFETY STRUCTURES, SYSTEMS, AND COMPONENTS

4.1 INTRODUCTION

This chapter of the Safety Analysis Report (SAR) for the F/H Area Laboratory (F/H Lab) (Buildings 772-F (including the LR-56S loading station), 772-1F, 772-4F, and the B-25 waste container staging area) provides details on those facility Structures, Systems, and Components (SSCs) that are designated as Safety Class and Safety Significant. This chapter also provides details on those Specific Administrative Controls (SACs) that are significant to specific accident risk reduction.

An SAC is an Administrative Control that provides specific preventive or mitigative function for accident scenarios identified in the Documented Safety Analysis (DSA) where the safety function has importance similar to, or the same as, the safety function of a safety SSC.

The Safety Class and Safety Significant SSCs and SACs of the F/H Lab are necessary for the facility to satisfy the evaluation guidelines, provide defense in depth, or contribute to worker safety. The scope of this chapter includes the following:

- Description of the safety SSCs and SACs or the F/H Lab, including the required safety functions
- Identification of support systems upon which the safety SSCs and SACs depend to carryout the required safety functions
- Identification of the functional requirements necessary for the safety SSCs to perform their safety functions, and the general conditions caused by postulated accidents under which the safety SSCs must operate and SACs perform
- Identification of the performance criteria necessary to provide reasonable assurance that the functional requirements will be met
- Identification of all assumptions that require Technical Safety Requirements (TSR) coverage

As part of the safety analysis procedure defined in Title 10 Code of Federal Regulations (CFR) Part 830, the engineered safety features and SACs that prevent or mitigate the consequences of all potential accidents, including the Design Basis Accidents (DBAs), must be identified (Ref. 1). A description of the safety functions, interfaces, operating conditions, and performance criteria for the engineered safety features and SACs is also required.

Title 10 CFR Part 830 prescribes the use of a graded approach for the effort expended in safety analyses and the level of detail presented in associated documentation (Ref. 1). The graded approach adjusts the magnitude of the preparation effort to the characteristics of the F/H Lab based on the facility hazard magnitude or severity, the facility complexity, and the facility life-cycle stage. Thus, 10 CFR Part 830 provides for developing the F/H Lab safety analysis based on these three factors.

The graded approach is based upon the Hazard Category (HC) of the facility under review. HC-2 and -3 facilities do not have the consequence potential associated with high hazard facilities, such as Class A reactors. HC-3 facilities will not have Safety Class SSCs, and the number of Safety Significant SSCs, if any, will be less than that of a HC-2 facility due to the reduced magnitude of the hazards. The graded approach requires more formality in establishing functional requirements and performance criteria for Safety Class SSCs than for Safety Significant SSCs, because grading is a function of the potential hazard to the public.

Building 772-F is HC-2 and Building 772-1F is HC-3 and neither has Safety Class functions. The B-25 Container Staging Area is HC-3 and contains no Safety Class functions. Building 772-4F is Hazard Category Radiological and has no Safety Class functions. All segments are categorized as General Use based on their chemical inventories.

4.2 REQUIREMENTS

This chapter was prepared in accordance with the format and content requirements defined in 10 CFR Part 830 and DOE Standard (STD) 3009-94 (Ref. 1, 2). Safety SSCs were identified in accordance with the guidance provided in DOE-STD-3009-94, Procedure 2.25 of Manual E7, and WSRC-TM-93-9 (Ref. 3, 4). The CHA (Ref. 5) and Chapter 3 of the DSA were utilized to determine the functional classification. SACs were identified in accordance with the guidance provided in DOE-STD-1186-2004 (Ref. 6).

4.3 SAFETY CLASS STRUCTURES, SYSTEMS, AND COMPONENTS

No SSCs are credited as Safety Class.

4.4 SAFETY SIGNIFICANT STRUCTURES, SYSTEMS, AND COMPONENTS

The SSCs listed in Table 4.4-1 are designated as Safety Significant. The table identifies the Chapter 3 accident(s) or rationale upon which the Safety Significant designation is based. The table also identifies the safety functions, functional requirements, and performance criteria judged to require TSR coverage.

The TSR controls that ensure functional requirements are described specifically for each Safety Significant SSC. In addition to the SSCs classified as Safety Significant and their supporting administrative controls, there are several other administrative controls that provide Safety Significant functions. Chapter 5 of this SAR further discusses these programs.

4.4.1 BUILDING 772-F

4.4.1.1 Safety Function

Building 772-F is designated as a Safety Significant SSC for protection of the site worker. Its primary function is to provide confinement of hazardous material. It must provide Decontamination Factor (DF) of 5 or better for a fire.

Building 772-F provides passive confinement for tornado, wind, earthquake, and external impact with no defined release.

4.4.1.2 System Description

The exterior envelope of Building 772-F (walls, roof, and floor) and structural components required to support them provide the safety function. The structural design ensures that the building will withstand exterior forces. Failure of the building to withstand the exterior forces could result in a building collapse and form a hazard to site workers from the potential release of radioactive material.

Building 772-F consists of two levels. The first level, also known as the service floor, is located underground. The service floor contains most of the service and utility support systems (including Shielded Areas A, B, C and E) and some of the exhaust fans and filter housings. The second floor, also known as the main floor, contains offices, the laboratory modules, shielded cells, and sample receiving rooms.

Building 772-F was designed in 1952 as a Class I, blast-resistant structure in accordance with Specification 3580, Project 8980, of the Building Code Requirements (Ref. 7). Site Structural Specification 7096 required that the facility be designed according to the January 1, 1946, Uniform Building Code, with an exception for an unusual load due to a bomb blast and for other reasons peculiar to the facility's function and location (Ref. 8).

Class I blast-resistant construction required the following:

- The building to be designed to support a static live load of 1,000 pounds per square foot (lb/ft2) acting simultaneously on the gross area of the outside face of exterior walls and the roof
- The foundations and building anchorage to be designed to resist overturning produced by a 1,000-lb/ft2 load acting on only one face at a time
- The exterior walls and roof to be poured, reinforced concrete; the supporting frame may be reinforced concrete or steel

4.4.1.3 Functional Requirements

The building must provide support and protection for the cell exhaust system ductwork and High-Efficiency Particulate Air (HEPA) filters, and the cells. It must maintain its structural integrity if a truck crashes into it. During conditions of earthquakes (0.20 acceleration of gravity [g] Peak Ground Acceleration [PGA]), high winds, and tornadoes (137-miles per hour [mph] fastest-mile wind speed tornado), the building is required to withstand the external forces. For the structural integrity to be maintained, the exterior walls, ceilings, floors, roof, and associated structural members are required to remain in place and maintain their ability to bear loads. Minor cracking and/or spalling of the structural members is allowed as long as structural integrity is not jeopardized. It is required to provide a DF of 5 for fires. The DF of 5 which equates to a Leak Path Factor (LPF) of 0.2 is supported when compared to an analysis for a DOE laboratory with a similar configuration using MELCOR software. In the model analyzed (Ref. 19) the laboratory modules are in the interior to the building with doors and ducts providing leak paths. The model considered ventilation inactive, one or more exterior doors open and wind impacting the exterior of the building. Failure of the building could cause the release of radioactive materials in greater quantities than assumed in the Chapter 3 analyses.

4.4.1.4 System Evaluation

Building 772-F was analyzed to withstand up to a 0.20 g PGA earthquake and up to 137-mph fastest-mile wind speed tornado (Ref. 9).

4.4.1.5 Technical Safety Requirement Controls

The adequacy of the structural components in Building 772-F is considered a design feature and as such, will be listed in Section 6 of the TSR and administrative controls are required to ensure that a program exists for review of design changes to the building structure. The program requires that any design changes be reviewed to ensure that the building can continue to withstand the exterior forces of earthquakes and straight winds. This program is described in Chapter 14.

4.4.2 BUILDING 772-1F

4.4.2.1 Safety Function

The 772-1F building is designated as a Safety Significant SSC is to provide segmentation for interaction between the radiological inventories in 772-1F and the B-25 waste inventory for design basis events including fire, straight wind and earthquake. This is a passive function provided by structural elements, and the outer shell (walls and roof) (see Table 4.4-1).

The 772-1F wall(s) separating the building from the B-25 waste inventory is designated as a Safety Significant SSC for protection of the site worker. Its function is to provide segmentation of the radiological inventories in 772-1F from the B-25 waste inventory, thereby limiting the hazardous material involved during a full facility fire. This is a passive function provided by the structural features of the wall(s). Minor cracking of the exterior Concrete Masonry Unit (CMU) walls may occur starting at 69 mph; however, building collapse will not start before 100 mph.

- Inspection of the Building 772-1F concrete masonry unit walls is required after sustained wind speeds of 69 mph are exceeded along with a re-evaluation of the structural integrity of the concrete masonry unit walls if cracks are found in the CMU

The HAD for this facility treated Building 772-1F as a separate facility segment. Likewise the HAD for the adjacent B-25 Waste Container Staging Area treated it as a separate facility segment. The result of this segmentation is two HC-3 segments instead of one HC-2 segment. The acceptability of this segmentation depends on the ability of the Building 772-1F to prevent events in either segment from causing the release of inventory in the other segment which includes fire, earthquake and straight wind. Inherent in this assumption is a fire protection program (Ref. 5).

4.4.2.2 System Description

The structural features of the 772-1F building ensures that the building radiological inventory and the B-25 waste inventory maintain inventory segmentation under accident conditions. The accident conditions are DBAs consisting of facility fires, earthquake, and straight wind events.

Building 772-1F was built in the mid-1980s and houses approximately 20 laboratory modules, four shielded cells, a control room, and other ancillary facilities. The building is a two-level structure (partial second level) located above ground.

Building 772-1F was designed to resist the forces resulting from a 50-year wind and/or tornado. Building 772-1F was designed in accordance with Project Specification Number 8299, Project S4238 (Ref. 10). This specification required that the facility be designed according to the Standard Building Code (Coastal Zone) and Site Structural Specification 7096 (Standard Construction) (Ref. 8).

4.4.2.3 Functional Requirements

For the structural integrity of 772-1F to be maintained, the exterior walls, roof, and associated structural members are required to remain in place and maintain their ability to bear loads. Minor cracking and/or spalling of the structural members is allowed as long as structural integrity is not jeopardized.

The walls separating Building 772-1F and the B-25 Waste Container Staging Area, together with the fire protection program, shall prevent fires in one segment from progressing into the other. Failure of the walls could cause the release of radioactive materials in greater quantities than assumed in the Chapter 3 analyses.

The building structure of 772-1F is required to remain intact to prevent interaction of radiological material with other facility segments for fire, earthquake and straight winds.

4.4.2.4 System Evaluation

The design for Building 772-1F has been qualified to withstand up to a 0.13 g PGA earthquake and up to 84-mph straight winds or an 80-mph tornado without a significant loss in structural integrity (minor cracking only) (Ref. 9). The robust construction will maintain confinement during an explosion and will resist the spread of fire.

4.4.2.5 Technical Safety Requirement Controls

The adequacy of the 772-1F building including the wall(s) separating the building from the B-25 waste inventory is considered a design feature and as such will not be assigned a corresponding TSR; however, administrative controls are required to ensure that a program exists for review of design changes to the building structure. The program must require that any design changes be reviewed to ensure that the wall can continue to perform its safety function. This program is described in Chapter 14.

An administrative control is in place to ensure that the fire protection program will limit combustibles and provide for fire response training and/or fire department response.

4.4.3 BUILDING 772-4F

4.4.3.1 Safety Function

Building 772-4F is designated as a Safety Significant SSC for protection of the site worker. Its function is to maintain structural integrity. The building must maintain structural integrity to provide protection and support for the Safety Significant Main Exhaust System components within the building (see Section 4.4.6). The structural integrity function is provided by the structural components of the building. Accident conditions include DBA earthquake.

4.4.3.2 System Description

The exterior envelope of Building 772-4F (walls and roof) and structural components required to support them perform the safety function. The structural design ensures that the building will withstand earthquake forces. Failure of the building to withstand these forces could result in damage to the Main Exhaust System.

4.4.3.3 Functional Requirements

The building must provide support and protection for the exhaust systems' ductwork, HEPA filter housings, and HEPA filters. It must maintain its structural integrity during conditions of earthquakes (0.20 g PGA). For the structural integrity to be maintained, the floors, roof, and associated structural members are required to remain in place and maintain their ability to bear loads.

4.4.3.4 System Evaluation

Building 772-4F was analyzed to withstand up to a 0.20 g PGA earthquake (Ref. 9).

4.4.3.5 Technical Safety Requirement Controls

The adequacy of the structural components in Building 772-4F is considered a design feature and as such, will not be assigned a corresponding TSR; however, administrative controls are required to ensure that a program exists for review of design changes to the building structure. The program requires that any design changes be reviewed to ensure that the building can continue to withstand the exterior forces of earthquakes and straight winds. This program is described in Chapter 14.

4.4.4 772-F/772-1F GLOVEBOXES

4.4.4.1 Safety Function

The gloveboxes are designated as Safety Significant to protect site workers from airborne radioactive particulates and radioactive materials. They provide protection under normal and accident conditions. Accident conditions include over-pressurization and loss of confinement events within the glovebox. These events could include spills, leaks, overflows, small fires, or uncontrolled reactions may result in high radioactivity levels to be present within the gloveboxes.

4.4.4.2 System Description

Buildings 772-F and 772-1F contain gloveboxes, which are located within laboratory modules. Building 772-4F does not contain any gloveboxes. The gloveboxes are confinement units used to isolate and handle high-alpha activity materials. The gloveboxes are made of stainless steel.

Gloves are installed in or below a laminated safety plate-viewing window sealed within the opening of the box wall, as shown in Figure 2.6-3 of this SAR. The gloveboxes contain an inlet HEPA filter through which air enters the glovebox and an outlet HEPA filter where air exhausts from the glovebox. The leak testing of the inlet and outlet HEPA filters for the gloveboxes cannot be tested in place. A 12- by 12-inch doorway is provided in the side of the gloveboxes. The doorway serves as an airlock for the transfer of material from adjacent radiobenches or radiohoods.

Basic glovebox accessories include glove ports (metal, plastic, or sphincter), an entry port or air lock, an inlet HEPA filter housing, an exhaust HEPA filter housing, bag ports, and Off Gas Exhaust (OGE) connections. Gloveboxes that require compressed gases include overpressure protection devices. Flow orifices protect the glovebox from being over-pressurized in the event of a supply gas regulator failure.

4.4.4.3 Functional Requirements

The glovebox is required to restrict airborne radioactive particulates within the glovebox from entering the atmosphere of the laboratory module. The barrier is provided by exterior surfaces that form the box, including panels, ports, and doorways. The front viewing window contains the glove ports, which are sealed by the gloves. The inlet HEPA filter provides a barrier at the air inlet. The outlet HEPA filters provide the barrier for the air outlet. Gaskets (window and equipment), gauges, and service connections are not significant items in maintaining the glovebox barrier. The window seal and other gasket materials are not considered part of the barrier.

The gloveboxes must provide passive confinement of airborne radioactive particulates resulting from spills, leaks, overflows, uncontrolled reactions, and over-pressurization that occur within the glovebox. Included in the safety function are flow orifices, which protect the glovebox from being over-pressurized in the event of a supply gas pressure regulator failure. Excluded are service connections and gaskets as the leak rate would be sufficiently small to meet the function of protecting the worker from radionuclides greater than HC-3 threshold quantity (TQ) inventory.

4.4.4.4 System Evaluation

The original gloveboxes were designed in accordance with Specification 3580 for Building 772-F and Specification 8299 for Building 772-1F (Ref. 7, 10). Those installed were designed to the then current standards. The integrity of the gloveboxes is verified by the ability of the ventilation to maintain correct pressure differentials, for active and inactive gloveboxes as defined by engineering judgement.

4.4.4.5 Technical Safety Requirement Controls

A configuration control program to control glovebox modifications shall be in place at the facility. Operating procedures for activities in the gloveboxes shall be in place at the facility.

4.4.5 772-F/772-1F SHIELDED CELLS

4.4.5.1 Safety Function

The shielded cells are designated as Safety Significant to protect site workers from airborne radioactive particulates and direct radiation exposure. The primary function is to provide confinement of hazardous material and radiation attenuation, thereby providing contamination control and facility worker protection. The shielded cells provide a protective barrier between the site worker and airborne radioactive particulates. This is a passive function provided by the outer shell and viewing window. The shielded cells provide protection under normal and accident conditions. Accident conditions include over-pressurization and loss of confinement events (e.g., spills, leaks, and overflows). Uncontrolled reactions or small fires may cause airborne radioactive particulates above normal levels to be present within the shielded cells.

4.4.5.2 System Description

Building 772-F contains two shielded cells. Building 772-1F contains four shielded cells. Building 772-4F has no shielded cells. The cells in Buildings 772-F and 772-1F are similarly designed.

The shielded cells are large containment enclosures used to handle small quantities of high gamma activity radioactive materials. The primary functions of the shielded cells are to provide safe means for receiving samples of process streams, to perform analytical chemistry directly on some of the samples, and to dilute others to acceptable radiological levels to permit analysis in the unshielded laboratories.

The shielded cells are located in a cell block having 20-inch-thick high-density concrete walls lined with stainless steel to a height of seven feet. The walls are designed to attenuate 200 Curies (Ci) of 0.7 million electron volts gamma activity to levels such that personnel next to the cells for 40 hours per week would not receive doses exceeding the regulatory guideline level of 0.5 millirem per hour.

Visual access to the cells is provided by viewing windows. The straight-through viewing area of each window is 25.5 inches by 30 inches. The shielding ability of the window is equal to or greater than that of the shielding walls.

The boundaries of the shielded cells provide confinement of airborne radioactive particulates. In Building 772-F, the Cell exhaust system ties to the Main Exhaust System. The ductwork and the HEPA filters for the shielded cells in 772-F provide confinement. Section 4.4.6 discusses the Main Exhaust System for Building 772-F.

4.4.5.3 Functional Requirements

The shielded cells are required to maintain a barrier to prevent airborne radioactive particulates within the shielded cells from entering the building atmosphere and to attenuate penetrating

radiation, which poses a radiological hazard. The exterior walls, viewing windows, ceiling, and floor provide the barrier. The exhaust system ductwork and shielded cells HEPA filters provide a barrier for Building 772-F. Because of smaller radionuclide inventories in Building 772-1F, the Cell Exhaust system ductwork that provides the barrier for the cell exhaust system is not designated as Safety Significant.

The shielded cells must provide confinement of airborne radioactive particulates resulting from spills, leaks, overflows, uncontrolled reactions, and fires that occur within the shielded cells.

4.4.5.4 System Evaluation

The shielded cells were installed under Project S-1189 specifications for Building 772-F (Ref. 11). The shielded cells are designed in accordance with Specification 8299 for Building 772-1F (Ref. 10). The integrity of the shielded cells is verified by the ability of the ventilation to maintain correct pressure differentials and radiation surveys that show the shielding is adequate. The viewing windows must be visually inspected periodically for evidence of degradation or violation of the seal.

4.4.5.5 Technical Safety Requirement Controls

A configuration control program to control shielded cell modifications shall be in place at the facility. Operating procedures for activities in the shielded cells shall be in place at the facility.

4.4.6 MAIN EXHAUST SYSTEM (BUILDING 772-F)

4.4.6.1 Safety Function

The ductwork from the shielded cells to their HEPA filter housings, the shielded cell's HEPA filter housings, and one stage of HEPA filtration at the Cell in the Main Exhaust System of Building 772-F are designated as Safety Significant for the purpose of providing site workers with protection from airborne radioactive particulates. Other parts of the Main Exhaust that perform a safety function are the concrete plenum, the old concrete stack and cap and the section of the Temporary Emergency Exhaust Treatment (TEXT) duct up to the isolation valve (slide gate damper) due to their serving as a confinement boundary the ductwork that connects the concrete plenum to the HEPA filter housings in Building 772-4F, one stage of 772-4F HEPA filters, and the 772-4F HEPA filter housings.

The Main Exhaust System has a passive function to maintain confinement of airborne radioactive particulates to prevent the release of airborne radioactive particulates to the outside environment. This function is not dependent on the active operation of the Main Exhaust System fans to provide exhaust air flow. The 772-4F HEPA filters remove airborne radioactive particulates from the exhaust air prior to release to the outside environment. The ductwork from the shielded cells to their HEPA filters also serves a worker protection function.

Accident conditions for which confinement must be provided include over-pressurization and loss of confinement (e.g., spills, leaks, uncontrolled reactions), and DBA earthquakes.

4.4.6.2 System Description

Figure 2.6-1 of this SAR illustrates the exhaust flow path for Buildings 772-F and 772-4F. Chapter 2 of this SAR provides a narrative description of the figure and how the system operates.

4.4.6.3 Functional Requirements

The Safety Significant portions of the Main Exhaust System perform a passive function of confining airborne radioactive particulates. This function is performed by providing a path from the shielded cells to the HEPA filters where the airborne radioactive particulates in the exhaust can be filtered prior to release. This function is required to be performed under normal operating conditions and in the event of spills, leaks, and uncontrolled reactions.

The Main Exhaust System ductwork also provides a filtered path from the interior of Building 772-F before release to the outside environment. This function is required to be performed in the event of an earthquake. Building 772-4F must maintain structural integrity so as not to compromise the filter system. It is discussed in Section 4.4.3.

4.4.6.4 System Evaluation

The Main Exhaust System concrete plenum, the old concrete stack and cap and the section of the TEXT duct up to the slide gate damper, the ductwork from the concrete plenum up to and including the HEPA filter housings in Building 772-4F, the 772-4F HEPA filters, and Building 772-4F itself have been evaluated and proven able to withstand up to a 0.20g PGA earthquake (Ref. 9).

The other Safety Significant portions of the Main Exhaust System will not be affected by the accidents for which they are required. Satisfactory performance during normal operations indicates that these SSCs are qualified for the Safety Significant function.

4.4.6.5 Technical Safety Requirement Controls

Administrative controls are required for establishing a filter test program to periodically test the HEPA filters in accordance with national standards to ensure the leak testing of filter assemblies falls within acceptable tolerance.

4.4.7 DELETED

4.4.8 OFF GAS EXHAUST SYSTEM (BUILDING 772-F)

4.4.8.1 Safety Function

The ventilation tunnel (exhaust pipe to the 221-F Canyon) for the OGE System in Building 772-F is designated as Safety Significant for the purpose of providing the site worker with protection from airborne radioactive particulates. The gloveboxes are exhausted by the OGE System, which is now configured for discharges to 772-4F.

The OGE System has a passive function to maintain confinement of airborne radioactive particulates to prevent the release of airborne radioactive particulates to the outside environment. This function is not dependent on the active operation of the OGE System fans to provide exhaust air flow. The ventilation tunnel provided a pathway, which isolated outside workers from airborne radionuclide particles in the exhaust air prior to transfer to the Warm Canyon. The exhaust is now directed to 772-4F.

Accident conditions for which confinement must be provided are DBA earthquake events.

4.4.8.2 System Description

The OGE System meets the guidelines described in Section 5.5 of DOE/TIC-11603 for safety-related equipment (Ref. 12). Chapter 2 of this SAR provides a more detailed description of the Building 772-F OGE System. A schematic diagram is shown in Figure 2.5-2.

4.4.8.3 Functional Requirements

The ventilation tunnel performs a passive function of confining airborne radioactive particulates. Portions of the Main Exhaust also provide this function. This function is required to be performed under DBA earthquake conditions.

4.4.8.4 System Evaluation

The ventilation tunnel has been evaluated and proven able to withstand up to a 0.20 g PGA earthquake (Ref. 9).

4.4.8.5 Technical Safety Requirement Controls

The adequacy of the ventilation tunnel is considered a design feature and as such will not be assigned a corresponding TSR; however, administrative controls are required to ensure that a program exists for review of design changes to the ventilation tunnel. The program must require

that any design changes be reviewed to ensure that the ventilation tunnel can continue to withstand the exterior forces of earthquakes.

4.4.9 INTERIOR WALLS (BUILDINGS 772-F AND 772-1F)

4.4.9.1 Safety Function

The interior walls separating fissile material in adjacent mass control zones in Buildings 772-F and 772-1F are designated as Safety Significant for the purpose of providing the site worker with protection from a nuclear criticality event.

The interior walls between fissile mass control zones has a passive function to maintain a minimum separation for accumulations of fissile material greater than threshold quantities to ensure the fissile material is bounded by the Nuclear Criticality Safety Evaluation.

This function is not dependent on a contiguous barrier but sufficient wall elements to provide separation of the back-to-back confinement as described in the Nuclear Criticality Safety Evaluation (ref. 13). This function is not required for interior walls which provide a physical barrier between a mass zone and corridors used solely for transfer of items containing fissile material since the transfer mass is controlled based on the NCSE (Ref. 13)

Accident conditions for which the separation must be provided include abnormal operations that occur within confinements. An interior wall providing separation is not required for abnormal events that breech the confinements such as an earthquake, facility fire, or explosion.

4.4.9.2 System Description

The interior walls of Buildings 772-F and 772-1F which separate adjacent fissile mass control zones with confinements authorized to contain greater than threshold quantities must provide separation of fissile masses through passive wall elements with a minimum cross sectional dimension of three inches as described in reference 13.

4.4.9.3 Functional Requirements

The interior wall elements of Building 772-F and 772-1F, which separate adjacent fissile mass control zones, perform a passive function for maintaining criticality safety within analyzed conditions. This function is required to be performed for back-to-back configuration involving locations authorized for accumulation of fissile material above threshold quantities under normal operations.

4.4.9.4 System Evaluation

The interior walls of Buildings 772-F and 772-1F which separate fissile mass control zones involving the handling and storage of fissile material greater than threshold quantities have been

evaluated to be configured as described in the NCSE (Ref. 13) for normal operations. Interior walls designated as serving the function in Building 772-F are as follows:

- Wall between Module 126 and Module 130
- Walls enclosing Shielded Area E (HAD Tank F location)

There are no interior walls with adjacent mass zones in Building 772-1F.

4.4.9.5 Technical Safety Requirement Controls

The adequacy of the interior walls separating fissile mass control zones are considered a design feature and as such will not be assigned a corresponding TSR; however, administrative controls are required to ensure that a program exists for review of design changes to interior walls in adjacent fissile mass control zones. The program must require that any design changes be reviewed to ensure that interior walls for adjacent fissile mass control zones provides the minimum separation for locations authorized for accumulation of fissile material greater than threshold quantities.

4.4.10 BUILDING 772-F SPRINKLER SYSTEM

4.4.10.1 Safety Function

The Building 772-F Sprinkler System is credited with reducing the intensity and propagation of a fire to the extent that it does not involve the total activity authorized for the facility; thereby mitigating radiological consequences in the following events:

- Lab module Fire

To perform this safety function, the Building 772-F Sprinkler System requires an adequate and reliable water supply system. The F-Area Outside Underground (OSUG) Fire Water Supply System provides the water to the Building 772-F Sprinkler System.

4.4.10.2 System Description

The fire water supply system to support the Building 772-F Sprinkler System is the F-Area OSUG Fire Water Supply System. One electric and two diesel fire pumps are in Building 902-3F. These pumps have been designed and installed in accordance with NFPA 20, Standard for the Installation of Stationary Pumps for Fire Protection. The water supply for the fire pumps is two 510,000 gallons capacity tanks. These tanks have been designed and installed in accordance with NFPA 22, Standard for Water Tanks for Private Fire Protection. The OSUG is looped in F Area creating multiple paths to deliver water to the sprinkler system in Building 772-F. The only single point of failure is the pipe from the OSUG to Building 772-F. F/H Labs

ownership starts at the first flange on the fire water distribution piping which comes from the OSUG.

Documentation in the form of a Memorandum of Understanding provides clear ownership boundaries and interface protocol between F/H Labs and the organization responsible for site infrastructure. The Memorandum of Understanding contains protocol to ensure that F/H Lab is promptly notified of degradation, abnormal events, maintenance, testing and inspection activities that impact Building 772-F fire water supply.

Sprinkler system in Building 772-F was installed during the mid 1970's. Building 772-F has two levels, Main floor and Service floor. Each floor is sectionalized at the valve header location where the isolation valves and system alarm valves are located. The system components considered for functional classification SS are as follows:

- system piping
- fittings
- sprinkler heads
- isolation control valves
- check valves
- system valves
- pressure gages
- fire department connection
- flow switches

The system components considered to maintain the pressure boundary for functional classification SS are as follows:

- Preaction Valve for the Diesel Generator Room
- pressure switches
- flow switches
- pressure gages

The functional classification of the signal generation capability of the pressure switches and flow switches are not credited and remain a PS functional classification. All other auxiliary components such as hangers and fire alarm system components have a PS functional classification because their failure would not have an adverse impact on the system's ability to deliver water to a fire in the given area.

Building 772-F Sprinkler system does not provide full coverage of Building 772-F (Ref. 14).

4.4.10.3 Functional Requirements

The functional requirement of the Building 772-F Sprinkler system is that the wet pipe sprinkler system is operable. Operability of a sprinkler system is defined as the ability to deliver an adequate amount of water (pressure and flow) to a fire in its coverage area. The Building 772-F Sprinkler System relies on the F-Area OSUG Fire Water Supply System to supply water.

Consequently for the Building 772-F to function, the F-Area OSUG Fire Water Supply System must supply fire water greater than the Building 772-F Sprinkler System demand.

The Building 772-F Sprinkler System is required to be operable in OPERATION and WARM STANDBY modes. It is not required to remain operable for catastrophic external events (e.g., plane crashes, vehicle crashes). It is required to remain operable during a wildland fire event. With the exception of fires started by lightning, the hazard and accident analysis does not require the Building 772-F Sprinkler System to function during or after an NPH event.

4.4.10.4 System Evaluation

The Building 772-F Sprinkler System classification was upgraded from Production Support to Safety Significant in Revision 10 of this DSA. The backfit analysis for the Building 772-F Sprinkler System (Ref. 16) documents the assessment of these systems and recognized no vulnerabilities.

A service outage that might impact all three fire pumps is unlikely and would easily be detected because other equipment that is visible would be effected. Procedures will require prompt notification by the organization responsible for site infrastructure that would allow F/H Labs to enter the prescribed LCO. Loss of electrical power to any or all of the fire pumps will cause the generation of a supervisory signal. This signal is sent to the Security and Fire Alarm System being monitored by the Alarm System Operator. When the Alarm System Operator receives this supervisory signal, the operator dispatches a runner to investigate the generation of this signal. The runner will investigate the supervisory condition providing notification of the system condition.

The design assessment identified that no Quality Assurance documentation could be located on the components of the Building 772-F Sprinkler System. The components were procured and designed in accordance with the code of record at the time and its original functional classification of Production Support. Most of the components are Underwriters Laboratories (UL) listed or Factory Mutual (FM) approved. Furthermore, the components are in good working condition although they have been in service for an extended period of time. The backfit analysis (Ref. 16) concluded this vulnerability does not prevent the Building 772-F Sprinkler System from performing its function. Quality Assurance documentation in accordance with the Building 772-F Wet Pipe Sprinkler System functional classification is applied to replacement parts or future work.

Periodic inspection and testing of the Building 772-F Sprinkler System is performed in accordance with approved procedures which are based on applicable portions of NFPA codes.

4.4.10.5 Technical Safety Requirement Controls

The required operability (ability to deliver an adequate amount of water) of the Building 772-F Sprinkler System shall be covered by an LCO. Periodic tests and surveillances shall be performed to verify the Building 772-F Sprinkler System operability.

4.4.11 BUILDING 772-1F SPRINKLER SYSTEM

4.4.11.1 Safety Function

The Building 772-1F Sprinkler System is credited with reducing the intensity and propagation of a fire to the extent that it does not involve the total activity authorized for the facility; thereby mitigating radiological consequences in the following events:

- Lab module Fire

To perform this safety function, the Building 772-1F Sprinkler System requires an adequate and reliable water supply system. The F-Area Outside Underground (OSUG) Fire Water Supply System provides the water to the Building 772-1F Sprinkler System.

4.4.11.2 System Description

The fire water supply system to support the Building 772-1F Sprinkler System is the F-Area OSUG Fire Water Supply System. One electric and two diesel fire pumps are in Building 902-3F. These pumps have been designed and installed in accordance with NFPA 20, Standard for the Installation of Stationary Pumps for Fire Protection. The water supply for the fire pumps are two 510,000 gallons capacity tanks. These tanks have been designed and installed in accordance with NFPA 22, Standard for Water Tanks for Private Fire Protection. The OSUG is looped in F Area creating multiple paths to deliver water to the sprinkler system in Building 772-1F. The only single point of failure is the pipe from the OSUG to Building 772-1F. F/H Labs ownership starts at the first flange on the fire water distribution piping which comes from the OSUG.

Documentation in the form of a Memorandum of Understanding provides clear ownership boundaries and interface protocol between F/H Labs and the organization responsible for site infrastructure. The Memorandum of Understanding contains protocol to ensure that F/H Labs is promptly notified of degradation, abnormal events, maintenance, testing and inspection activities that impact Building 772-1F fire water supply.

Sprinkler system in Building 772-1F is a wet pipe system which includes two manual Deluge systems. The Building 772-1F wet pipe sprinkler system components considered for functional classification SS are as follows:

- system piping
- fittings
- sprinklers
- isolation control valves
- check valves
- system valves
- pressure gages
- flow switches

The manual Deluge Sprinkler Systems for Building 772-1F will remain functional classification PS because there is no MAR and no postulated fire challenging the Wet Pipe Sprinkler System. The Deluge Sprinkler system components considered to maintain the pressure boundary for functional classification SS are as follows:

- Deluge Valves
- pressure switch
- flow switch
- pressure gages

The functional classification of the signal generation capability of the pressure switch and flow switch is not credited and remains a PS functional classification. All other auxiliary components such as hangers and fire alarm system components have a PS functional classification because their failure would not have an adverse impact on the system's ability to deliver water to a fire in the given area.

Building 772-1F Sprinkler system does not provide full coverage of Building 772-1F (Ref. 15).

4.4.11.3 Functional Requirements

The functional requirement of the Building 772-1F Sprinkler system is that the wet pipe sprinkler system is operable. Operability of a sprinkler system is defined as the ability to deliver an adequate amount of water (pressure and flow) to a fire in its coverage area. The Building 772-1F Sprinkler System relies on the F-Area OSUG Fire Water Supply System to supply water. Consequently for the Building 772-1F to function, the F-Area OSUG Fire Water Supply System must supply fire water greater than the Building 772-1F Sprinkler System demand.

The Building 772-1F Sprinkler System is required to be operable in OPERATION and WARM STANDBY modes. It is not required to remain operable for catastrophic external events (e.g., plane crashes, vehicle crashes). It is required to remain operable during a wildland fire event. With the exception of fires started by lightning, the hazard and accident analysis does not require the Building 772-1F Sprinkler System to function during or after an NPH event.

4.4.11.4 System Evaluation

The Building 772-1F Sprinkler System classification was upgraded from Production Support to Safety Significant in Revision 10 of this DSA. The backfit analysis for the Building 772-1F Sprinkler System (Ref. 17) documents the assessment of these systems and recognized no vulnerabilities.

A service outage that might impact all three fire pumps is unlikely and would easily be detected because other equipment that is visible would be effected. Procedures will require prompt notification by the organization responsible for site infrastructure that would allow F/H Labs to enter the prescribed LCO. Loss of electrical power to any or all of the fire pumps will cause the generation of a supervisory signal. This signal is sent to the Security and Fire Alarm System being monitored by the Alarm System Operator. When the Alarm System Operator receives this

supervisory signal, the operator dispatches a runner to investigate the generation of this signal. The runner will investigate the supervisory condition providing notification of the system condition.

The design assessment identified that no Quality Assurance documentation could be located on the components of the Building 772-1F Sprinkler System. The components were procured and designed in accordance with the code of record at the time and its original functional classification of Production Support. Most of the components are Underwriters Laboratories (UL) listed or Factory Mutual (FM) approved. Furthermore, the components are in good working condition although they have been in service for an extended period of time. The backfit analysis (Ref. 17) concluded this vulnerability does not prevent the Building 772-1F Sprinkler System from performing its function. Quality Assurance documentation in accordance with the Building 772-1F Wet Pipe Sprinkler System functional classification is applied to replacement parts or future work.

Periodic inspection and testing of the Building 772-1F Sprinkler System is performed in accordance with approved procedures which are based on applicable portions of NFPA codes.

4.4.11.5 Technical Safety Requirement Controls

The required operability (ability to deliver an adequate amount of water) of the Building 772-1F Sprinkler system shall be covered by an LCO. Periodic tests and surveillances shall be performed to verify the Building 772-1F Sprinkler system operability.

4.5 SPECIFIC ADMINISTRATIVE CONTROLS

An Administrative Control is designated as an SAC if (1) it is identified in the DSA as a control needed to prevent or mitigate an accident scenario, and (2) it has a safety function that would be safety significant or safety class if the function were provided by an SSC. SACs may also be needed to protect important initial conditions and assumptions of the hazard or accident analysis or provide the main mechanisms for hazard control.

The Administrative Controls listed in Table 4.5-1 are designated as SACs. The table identifies the Chapter 3 accident(s) or rationale upon which the SAC designation is based. The table also identifies safety functions, functional requirements, and performance criteria judged to require TSR coverage. In support of Table 4.5-1, the onsite consequences associated with the Chapter 3 accidents and events are identified and summarized in the CHA (Ref. 5).

Chapter 5 of this DSA also discusses the derivation of these SACs.

4.5.1 HYDROGEN CONTROL (TSR SAC 5.7.3.4)

4.5.1.1 Safety Function

This administrative control is designated as a Safety Significant SAC because the doses calculated from the explosion events in a glovebox are based on a strong deflagration and a detonation taking place involving Organic Compounds. A detonation involving hydrogen in a glovebox would be an unanalyzed accident. The safety function of this SAC is: “To prevent a condition, which has not been evaluated for a potential detonation involving hydrogen, from occurring in a glovebox. This unevaluated condition exists when hydrogen generation, from chemical dissolution activities being performed, occurs in a glovebox containing Volatile Organic Compounds (VOCs).”

4.5.1.2 Specific Administrative Control Description

The accident analysis postulates a deflagration in a glovebox as an explosion event. This is based on the assumption that chemical dissolution activities that could generate a significant amount of hydrogen are not performed in a glovebox containing VOCs. VOCs alone will not produce a gas mixture that will detonate. The scenario where VOCs are combined with hydrogen in a glovebox has not been evaluated to determine if it could detonate. Since hydrogen is not piped into gloveboxes or brought into a glovebox in other ways, chemical dissolution activities is the only way that significant hydrogen may be introduced into a glovebox. Therefore, this SAC conservatively prevents the possibility of detonations in gloveboxes involving hydrogen.

4.5.1.3 Functional Requirements

To perform this safety function, the gloveboxes that contain significant amounts of VOCs must be known and tracked. Additionally, processes that may generate significant amounts of hydrogen must be identified prior to performance and steps taken to ensure the process does not take place in a glovebox containing significant amounts of VOCs. Written procedures or checklists must be provided to ensure this limit is reliably controlled.

4.5.1.4 Specific Administrative Control Evaluation

This SAC described in section 4.5.1.1 is used as the basis for not postulating an event in a glovebox which would result in more severe consequences than the strong deflagration event was postulated. Therefore, a single violation in which a hydrogen generating process is permitted to take place in a glovebox containing VOCs would result in a situation where a multiple reactant detonation may be possible and, therefore, a potentially unanalyzed condition. Because the required evaluations are completed before any hazard is created, there are no time constraints placed on performance of this control. The required evaluations are not unusually difficult and are not required to be performed under conditions that would be expected to increase stress levels that would reduce the quality of their performance. Therefore, standard procedures and operating practices for control of nuclear material are sufficient to ensure this SAC is met.

4.5.1.5 Technical Safety Requirement Controls

This SAC is included in the F/H Lab TSRs in an Administrative Control format.

4.5.2 DELETED

4.5.3 HAZARDOUS MATERIAL INVENTORY FACILITY LIMITS - RADIOLOGICAL (TSR SAC 5.7.3.1.1.)

4.5.3.1 Safety Function

This administrative control is designated as a Safety Significant SAC because it protects the facility inventory that provided the MAR input for the bounding cases in F/H Lab and, therefore, a single violation in which the inventory is confirmed to be exceeded within the facility would result in an unanalyzed condition. The safety function of this SAC is: “To limit the total quantity of nuclear material present within Building 772-1F, Building 772-F, and the B-25 pad to no more than the maximums assumed in F/H Lab SAR Tables 3.3-3, 3.3-4, and 3.3-5 (excludes fissile material mass limits, glovebox limits, and radiohood, radiobench or chemical hood limits).”

4.5.3.2 Specific Administrative Control Description

The nuclear material control procedure implements the facility inventory controls for the MAR limit discussed in section 4.5.3.1. This SAC applies to the total quantity of nuclear material present within Building 772-1F, Building 772-F, and the B-25 pad. Responsibility for tracking the Ci inventory within the F/H Lab to ensure the inventory limits are not exceeded falls to the Material Balance Area Custodian or designee. Procedure L2-NMC-10000 provides the requirements and controls that implement the facility's nuclear material inventory controls. Only those requirements and controls described in procedure L2-NMC-10000 that provide for the nuclear material inventory control within Building 772-1F, Building 772-F, and the B-25 pad constitute this SAC. The F/H Lab processes thousands of samples per year. The facility or organization submitting any sample is responsible for providing a conservative, bounding estimate of the Ci for each sample or sample type. Samples below a procedurally established threshold representing an inconsequential Ci load are not tracked. For the B-25 pad, engineering performs a calculation supporting a container count as an equivalent means of inventory every time the waste streams are re-characterized. Therefore, no F/H Lab assaying equipment is routinely involved

An SAC is utilized in lieu of the identification of safety SSCs, because there are no SSC that exist that can effectively perform this safety function which is administrative in nature.

4.5.3.3 Functional Requirements

To perform this safety function, the amounts of nuclear material in Ci must be tracked and compared to the existing amounts within Building 772-1F, Building 772-F, and the B-25 pad to ensure the total Ci does not exceed the inventory limits described in section 4.5.3.1. Written procedures or checklists must be provided to ensure this limit is reliably controlled.

4.5.3.4 Specific Administrative Control Evaluation

The inventory limit described in section 4.5.3.1 is used to provide the MAR input for the bounding cases in the F/H Lab accident analyses and, therefore, a single violation in which the inventory is confirmed to be exceeded within the facility would result in an unanalyzed condition. There is no safety margin built into the inventory limits, but very conservative values are used in calculating a facility inventory. Also, portions of the material are disposed of routinely during analysis without offsetting the inventory which adds to the conservatism such that challenging or exceeding the inventory limit on paper may not indicate an actual physical challenge or exceedance.

If the inventory limit is exceeded, no accident results. Because the required evaluations are completed before any movement of nuclear material, there are no time constraints placed on performance of this control. The required evaluations are not unusually difficult and are not required to be performed under conditions that would be expected to increase stress levels that would reduce the quality of their performance. Therefore, standard procedures and operating practices for control of nuclear material are sufficient to ensure this SAC is met.

4.5.3.5 Technical Safety Requirement Controls

This SAC is included in the F/H Lab TSRs in an Administrative Control format.

4.5.4 MATERIAL INVENTORY VOLATILE ORGANIC COMPOUND LABORATORY MODULE LIMIT – (TSR SAC 5.7.3.1.2)

4.5.4.1 Safety Function

This administrative control is designated as a Safety Significant SAC because it protects the inventory that provided the MAR input for the deflagration in a glovebox event evaluated in the CHA and, therefore, a single violation in which the inventory is confirmed to be exceeded within the glovebox and room would result in an unanalyzed condition. The safety function of this SAC is: "To limit the total quantity of nuclear material present within Building 772-1F and Building 772-F laboratory modules containing VOCs to no more than the maximums assumed in F/H Lab SAR Tables 3.3-3 and 3.3-4."

4.5.4.2 Specific Administrative Control Description

The nuclear material control procedure implements the laboratory modules inventory controls for the MAR limit discussed in section 4.5.4.1. This SAC applies to the total quantity of nuclear material present within Building 772-1F and Building 772-F laboratory modules that contain VOCs. Responsibility for tracking the Ci inventory within these laboratory modules to ensure the inventory limits are not exceeded falls to the Facility Custodian.

An SAC is utilized in lieu of the identification of safety SSCs, because there are no SSC that exist that can effectively perform this safety function which is administrative in nature.

4.5.4.3 Functional Requirements

To perform this safety function, the amounts of nuclear material in Ci must be tracked and regulated for each laboratory modules that contains nuclear material and VOCs within Building 772-F to ensure the total Ci does not exceed the inventory limits described in section 4.5.4.1. The full facility Inventory of Building 772-1F serves to protect this limit. Written procedures or checklists must be provided to ensure this limit is reliably controlled.

4.5.4.4 Specific Administrative Control Evaluation

The inventory limit described in section 4.5.4.1 is used to protect the laboratory modules inventory that provided the MAR input for the deflagration event evaluated in the CHA and, therefore, a single violation in which the inventory is confirmed to be exceeded within the laboratory modules would result in an unanalyzed condition. There is no safety margin built into the inventory limits, but conservative values are used in calculating a laboratory modules inventory.

If the inventory limit is exceeded, no accident results. Because the required evaluations are completed before any movement of nuclear material, there are no time constraints placed on performance of this control. The required evaluations are not unusually difficult and are not required to be performed under conditions that would be expected to increase stress levels that would reduce the quality of their performance. Therefore, standard procedures and operating practices for control of nuclear material are sufficient to ensure this SAC is met.

4.5.4.5 Technical Safety Requirement Controls

This SAC is included in the F/H Lab TSRs in an Administrative Control format.

4.5.5 FLASHING SPRAY RELEASE SUSCEPTIBLE CONTAINER LIMITS - RADIOLOGICAL

4.5.5.1 Safety Function

This Administrative Control is designated as a Safety Significant SAC because it protects the facility inventory that provided the MAR input for the bounding cases in F/H Lab. The safety function of this SAC is:

- To limit the Total Activity of nuclear material in a FSR configuration present within Buildings 772-F and Building 772-1F to no more than the maximums assumed in F/H Lab SAR Tables 3.3-3 and 3.3-4 (excludes nuclear material mass limits, glovebox limits, radiohood, radiobench or chemical hood limits).

4.5.5.2 Specific Administrative Control Description

The facility inventory controls for the MAR limit discussed in section 4.5.5.1 are controlled through facility procedures for surveillance of accountable nuclear materials. This SAC applies to the total activity of accountable nuclear material in a FSR configuration present within Building 772-F and Building 772-1F. Responsibility for tracking the Ci inventory within the F/H Lab to ensure the inventory limits are not exceeded falls to the Analytical staff assigned to F/H Lab. Procedure L2-1-10029 provides the requirements and controls that implement the facility's FSR inventory controls. Only those requirements and controls described in procedure L2-1-10029 that provide for the nuclear material inventory control within Building 772-F and Building 772-1F constitute this SAC. The F/H Lab processes thousands of samples per year. The facility or organization submitting any sample is responsible for providing a conservative, bounding estimate of the Ci for each sample or sample type. Samples below a procedurally established threshold representing an inconsequential Ci load are not tracked. The analytical operation manages, selects and utilizes containers which minimizes the FSR configuration

A SAC is utilized in lieu of the identification of safety SSCs, because there are no SSC that exist that can effectively perform this safety function which is administrative in nature.

A surveillance is used to track the inventory due to the large number of inconsequential samples and the slow rate of change for accountable liquids (Ref. 18)

4.5.5.3 Functional Requirements

To perform this safety function, the amounts of nuclear material in Ci must be inventoried and compared to the existing amounts within Building 772-F and Building 772-1F in Ci does not exceed the inventory limits described in section 4.5.5.1. Written procedures or checklists must be provided to ensure this limit is reliably controlled.

4.5.5.4 Specific Administrative Control Evaluation

The inventory limit described in section 4.5.5.1 is used to provide the MAR input for the bounding cases in the F/H Lab accident analyses. There is no safety margin built into the inventory limits, but very conservative values are used in calculating a FSR inventory. Also, portions of the material are disposed of routinely during analysis without offsetting the inventory which adds to the conservatism such that challenging or exceeding the inventory limit on paper may not indicate an actual physical challenge or exceedance.

If the inventory limit is exceeded, no accident results. The LCO provides for specified actions to be accomplished to reestablish the inventory below the limits. The required evaluations are not unusually difficult and are not required to be performed under conditions that would be expected to increase stress levels that would reduce the quality of their performance. Therefore, standard procedures and operating practices for control of nuclear material are sufficient to ensure this SAC is met.

4.5.5.5 Technical Safety Requirement Controls

This SAC is included in the F/H Lab TSRs in a Limiting Condition for Operation format. Periodic surveillances shall be performed to verify the FSR inventories for Building 772-F and Building 772-1F FSR are maintained within the prescribed limits for each building.

4.6 REFERENCES

1. Nuclear Safety Management. Title 10 Energy, Code of Federal Regulations, Part 830, U.S. Department of Energy, Washington, DC, January 2006.

2. Preparation Guide for U.S. Department of Energy Nonreactor Nuclear Facility Safety Analysis Reports. DOE-STD-3009-94, CN3, U.S. Department of Energy, Washington, DC, March 2006.

3. "Functional Classification," Procedure 2.25, Rev. 14, Conduct of Engineering and Technical Support. Manual E7, Savannah River Nuclear Solutions, Aiken, SC.

4. Functional Classification Methodology Manual. WSRC-TM-93-9, Westinghouse Savannah River Company, Aiken, SC.

5. Oakley, R. Consolidated Hazards Analysis for Operations in Building 772-F, 772-1F, 772-4F and B-25 Pad. WSRC-TR-2006-00099, Rev 5, Savannah River Nuclear Solutions, Aiken, SC. June 2010.

6. Specific Administrative Controls. DOE-STD-1186-2004, U.S. Department of Energy, Washington, DC, August 2004.

7. Building Code Requirements. Specification 3580, Project 8980, E.I. du Pont de Nemours & Co., Savannah River Plant, Aiken, SC, January 1951.

8. Structural Specification for Building Code Requirements. Site Structural Specification 7096, Rev. 2, E.I. du Pont de Nemours and Company, Savannah River Plant, Aiken, SC, November 1979.

9. Baldwin, G.R., Faires, W.E., and Griffin, M.J. Natural Phenomena Hazards Qualification of Buildings 772-F, 772-1F, and 772-4F Structures, Systems, and Components. WSRC-TR-95-0080, Rev. 0, Westinghouse Savannah River Company, Aiken, SC, February 1995.

10. Project Specification No. 8299 - Site Work, Building Materials, Mechanical, Electrical, Instruments, Power, Heating and Ventilating for Building 772-1F - 200 F-Area - Production Control Facility. Project S4238, E.I. du Pont de Nemours and Company, Savannah River Plant, Aiken, SC, July 1983.

11. Building Descriptions, 772-F and 772-1F. DPSOP 82-4, Rev. 2, E.I. du Pont de Nemours and Company, Savannah River Plant, Aiken, SC, January 1987.

12. Brynda, W.J., Scarlett, C.H., Tanguay, G.E., and Lobner, P.R. Nonreactor Nuclear Facilities: Standards and Criteria Guide. DOE/TIC-11603, Rev. 1, Science Applications International Corporation, La Jolla, CA, September 1986.

13. Nuclear Criticality Safety Evaluation: F/H Area Laboratory. N-NCS-F-00126, Rev.2, Savannah River Nuclear Solutions, Aiken, SC.

14. Fire Hazards Analysis for 772-F, F-FHA-F-00006, Rev. 6 Savannah River Plant, Aiken, SC.

15. Fire Hazards Analysis for 772-1F, F-FHA-F-00012, Rev. 5 Savannah River Plant, Aiken, SC.

16. Pierucci, D. M. Bldg. 772-F Sprinkler Systems Backfit Analysis, F-BFA-F-00002, Revision 0, Savannah River Plant, Aiken, SC,

17. Pierucci, D. M. Building 772-1F Sprinkler Systems Backfit Analysis, F-BFA-F-00003, Revision 0, Savannah River Plant, Aiken, SC,

18. SRNS-N3400-2010-00105, Basis for FSR Material Surveillance Frequency, Mansfield, K.S, June 9, 2010

19. Leonard, M. T., and McClure, P.R., Direct Calculation of Leak Path Factors for Highly Compartmentalized Buildings, LA-UR-98-1880, June 1998.

4.7 TABLES

Table 4.4-1 Safety Significant Structures, Systems and Components

Chapter 4 Section	Safety Significant SSCs	Chapter 3 Rationale	Safety Function	Functional Requirement	Performance Criteria
4.4.1	Building 772-F structural components	Earthquakes, straight winds, tornadoes, fire, explosions, and external impacts	The function of the 772-F is to provide confinement of hazardous material, thereby, providing contamination control and co-located worker protection	Maintain structural integrity during accident conditions Provide a DF = 5 for a fire. Building 772-F provides passive confinement for tornado, wind, earthquake, and external impact with no defined release	Must withstand 0.20 g PGA seismic event and 137-mph tornado See Ref. 9 for verification

Table 4.4-1 Safety Significant Structures, Systems and Components (Continued)

Chapter 4 Section	Safety Significant SSCs	Chapter 3 Rationale	Safety Function	Functional Requirement	Performance Criteria
4.4.2	Building 772-1F structural elements (walls, roof, and internal CMU supporting walls) separating the building from the B-25 waste inventory	Facility Fire, earthquakes, straight winds	The structural elements (walls, roof, and internal CMU supporting walls) adjacent to the B-25 inventory maintain segmentation of the inventory	In combination with the Fire Protection Program, the walls prevent spreading of a fire in the B-25 Waste Container Staging Area or Building 772-1F from one segment to the other Robust construction ensures that the building will withstand up to a 0.13g earthquake and up to 84 mph straight winds or an 80 mph tornado	Robust construction limits the spread of fire

Table 4.4-1 Safety Significant Structures, Systems and Components (Continued)

Chapter 4 Section	Safety Significant SSCs	Chapter 3 Rationale	Safety Function	Functional Requirement	Performance Criteria
4.4.3	Building 772-4F Structural Components	Earthquakes	Structurally support and protect the Safety Significant Main Exhaust System components	Maintain structural integrity during accident conditions This is a passive function provided by structural elements.	Must withstand 0.20 g PGA seismic event
4.4.4	Gloveboxes (Buildings 772-F and 1F)	Over-pressurization and Loss of Confinement (Spills, leaks, overflows, and uncontrolled reactions)	Confine plutonium-bearing material	Maintain confinement of airborne radioactive particulates. Passive function provided by glovebox structure Included are flow orifices, which protect the gloveboxes from being over-pressurized due to a supply gas pressure regulator failure.	Differential pressure is maintained when OGE is active
4.4.5.a	Shielded cells (Buildings 772-F)	Over-pressurization and loss of confinement (Spills, leaks, overflows, and uncontrolled reactions)	Provide confinement of hazardous material and radiation attenuation, thereby, providing contamination control and facility worker protection.	Maintain confinement of airborne radioactive particulates Attenuate penetrating radiation This is a passive function provided by the outer shell and viewing window	Radiation levels less than 0.5 millirem per hour

Table 4.4-1 Safety Significant Structures, Systems and Components (Continued)

Chapter 4 Section	Safety Significant SSCs	Chapter 3 Rationale	Safety Function	Functional Requirement	Performance Criteria
4.4.5.b	Shielded cells (Buildings 772-1F)	Over-pressurization and loss of confinement (Spills, leaks, overflows, and uncontrolled reactions)	Provide confinement of hazardous material and radiation attenuation, thereby, providing contamination control and facility worker protection	Maintain confinement of airborne radioactive particulates Attenuate penetrating radiation. This is a passive function provided by the outer shell and viewing window	Radiation levels less than 0.5 millirem per hour
4.4.6	Main Exhaust System (Building 772-F) a) Concrete plenum, ductwork from concrete plenum to 772-4F HEPA filter housings, at least one stage of 772-4F HEPA filters, and HEPA filter housings b) Ductwork from shielded cells to their HEPA filter housings, one stage of HEPA filters and HEPA filter housings, old concrete stack and cap c) TEXT ductwork from the 772-F concrete plenum to the isolation valve is to limit incoming air under earthquake accidents	a) Earthquakes b) Over-pressurization and loss of confinement (Uncontrolled reactions, leaks and spills) c) fire in Building 772-F	Confine airborne radioactive particulates	Maintain confinement of airborne radioactive particulates	Evaluated to withstand 0.20g PGA seismic event. HEPA filter leak testing
4.4.7 (Deleted)					

Table 4.4-1 Safety Significant Structures, Systems and Components (Continued)

Chapter 4 Section	Safety Significant SSCs	Chapter 3 Rationale	Safety Function	Functional Requirement	Performance Criteria
4.4.8	OGE System Ventilation Tunnel (Building 772-F)	DBA earthquake	Contain airborne radioactive particulates	Maintain confinement of airborne radioactive particulates	Evaluated to withstand 0.20 g PGA seismic event
4.4.9	Interior Walls (Buildings 772-F and 772-1F)	Nuclear Criticality	Provide separation between fissile mass control zones	Maintain minimum distance for confinements with accumulations of fissile material above threshold quantities	Evaluated for wall elements involving back-to-back configurations in normal operations
4.4.10	Building 772-F Fire Suppression System	Fire	Limit intensity and propagation of a fire.	Reduce unshielded MAR involvement	Evaluated to reduce unshielded inventory involvement by a factor of 4
4.4.11	Building 772-1F Fire Suppression System	Fire	Limit intensity and propagation of a fire.	Reduce unshielded MAR involvement	Evaluated to reduce unshielded inventory involvement by a factor of 4

Table 4.5-1 Specific Administrative Controls

Chapter 4 Section	SAC	Chapter 3 Accidents	Safety Functions	Functional Requirements	Performance Criteria
4.5.1	Hydrogen Control	Explosion	Prevents a condition, which has not been evaluated for a potential detonation, from occurring in a glovebox	Gloveboxes that contain significant amounts of VOCs must be known and tracked Process that may generate significant amounts of hydrogen must be identified prior to performance and steps taken to ensure the process does not take place in a glovebox containing significant amounts of VOCs	Written procedures or checklists must be provided to ensure the process does not take place in a glovebox containing significant amounts of VOCs
4.5.3	Building Radiological Material Inventory Facility Limits	All Events	To limit the total quantity of nuclear material present within Building 772-1F, Building 772-F, and the B-25 pad to no more than the maximums assumed in SAR Tables 3.3-3, 3.3-4, and 3.3-5 (excludes fissile material mass limits, glovebox limits, and radiohood, radiobench or chemical hood limits)	The amounts of nuclear material in Ci must be tracked and compared to the existing amounts within Building 772-1F, Building 772-F, and the B-25 pad to ensure the total Ci does not exceed the inventory limits	Written procedures or checklists must be provided to ensure this limit is reliably controlled
4.5.4	Glovebox Radiological Material Inventory laboratory module limits	All Events	To limit the total quantity of nuclear material present within Building 772-1F and Building 772-F laboratory modules containing VOCs to no more than the maximums assumed in F/H Lab SAR Tables 3.3-3 and 3.3-4	The amounts of nuclear material in Ci must be tracked and regulated for each laboratory module that contains VOCs and nuclear material within Buildings 772-1F and 772-F to ensure the total Ci does not exceed the inventory limits	Written procedures or checklists must be provided to ensure this limit is reliably controlled
4.5.3	Radiological Material FSR Inventory Limits	Fire	To limit the total quantity of nuclear material in FSR configuration present within Building 772-1F and Building 772-F to no more than the maximums assumed in SAR Tables 3.3-3 and 3.3-4,(excludes fissile material mass limits, glovebox limits, and radiohood, radiobench or chemical hood limits)	The amounts of FSR configured nuclear material in Ci must be inventoried and compared to the existing amounts within Building 772-F and Building 772-1F to ensure the FSR Ci does not exceed the inventory limits	Written procedures or checklists must be provided to ensure this limit is reliably controlled

4.8 FIGURES

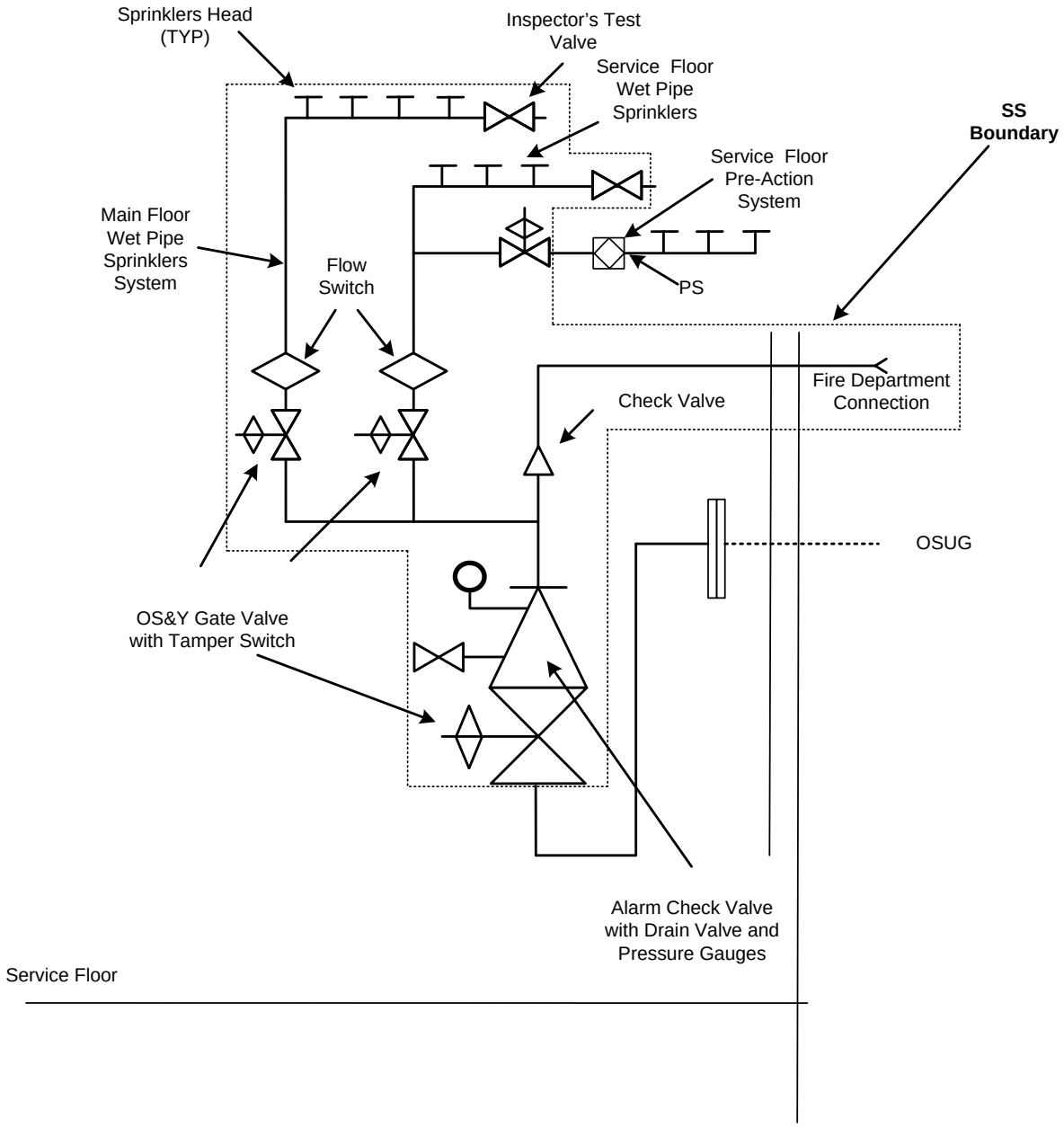

Figure 4.1 Building 772-F Fire Suppression System

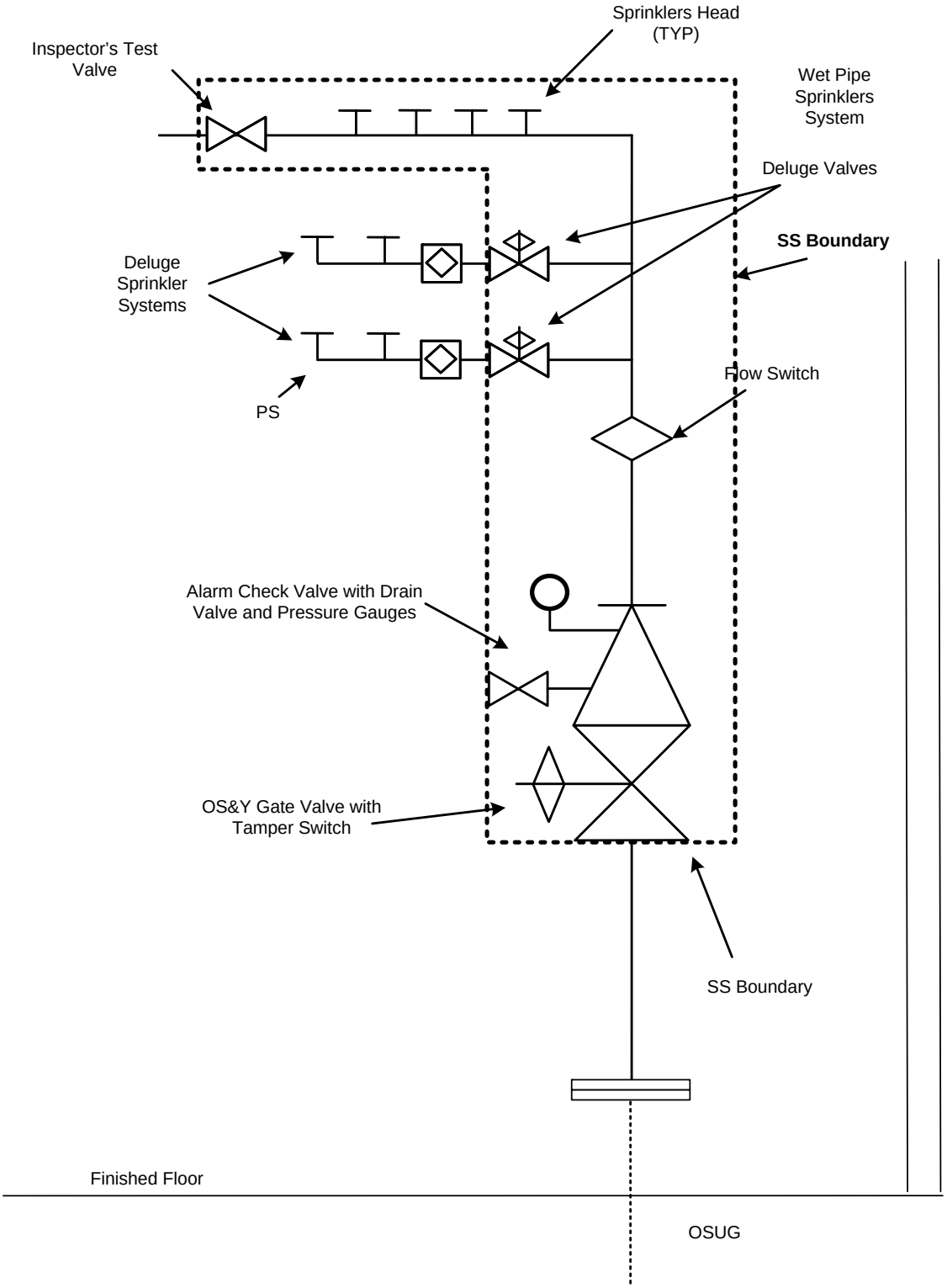

Figure 4.2 Building 772-1F Fire Suppression System

**CENTRAL LABORATORY FACILITY -
BUILDINGS 772-F, 772-1F, AND 772-4F
SAFETY ANALYSIS REPORT**

CHAPTER 5

DERIVATION OF TECHNICAL SAFETY REQUIREMENTS

August 2010

Savannah River
Nuclear Solutions, LLC
A Fluor Daniel Partnership

DISCLAIMER

This document was prepared by Savannah River Nuclear Solutions LLC (SRNS), under contract with the United States Department of Energy (DOE).

Release to and Use by Third Parties. As it pertains to releases of this document to third parties, and the use of or reference to this document by such third parties in whole or in part, neither SRNS, DOE, nor their respective officers, directors, employees, agents, consultants or personal services contractors (i) make any warranty, expressed or implied, (ii) assume any legal liability or responsibility for the accuracy, completeness, or usefulness, of any information, apparatus, product or process disclosed herein or (iii) represent that use of the same will not infringe privately owned rights. Reference herein to any specific commercial product, process, or service by trademark, name, manufacture or otherwise, does not necessarily constitute or imply endorsement, recommendation, or favoring of the same by SRNS, DOE or their respective officers, directors, employees, agents, consultants or personal services contractors. The views and opinions of the authors expressed herein do not necessarily state or reflect those of the United States Government or any agency thereof.

CONTENTS

Page

5.0 DERIVATION OF TECHNICAL SAFETY REQUIREMENTS 5.1-1

5.1 INTRODUCTION 5.1-1

5.1.1 Objective 5.1-1

5.1.2 Scope 5.1-1

5.2 REQUIREMENTS 5.2-1

5.3 TECHNICAL SAFETY REQUIREMENTS COVERAGE 5.3-1

5.3.1 Facility Background 5.3-1

5.3.2 Application of Methodology 5.3-1

5.3.2.1 Technical Safety Requirements Methodology 5.3-1

5.3.2.2 Facility Evaluation 5.3-2

5.3.2.3 Accidents Evaluated 5.3-3

5.4 DERIVATION OF FACILITY MODES 5.4-1

5.5 TECHNICAL SAFETY REQUIREMENTS DERIVATION 5.5-1

5.5.1 Building 772-F Fire Suppression systems (LCO 3.1.1) 5.5-1

5.5.1.1 Surveillance Requirements 5.5-1

5.5.2 Building 772-1F Fire Suppression Systems (LCO 3.1.2) 5.5-2

5.5.2.1 Surveillance Requirements 5.5-2

5.5.3 Container Configuration FSR MAR 772-F [Specific Administrative Control] (LCO 3.1.3) 5.5-2

5.5.3.1 Surveillance Requirements 5.5-3

5.5.4 Container Configuration FSR MAR 772-1F [Specific Administrative Control] (LCO 3.1.4) 5.5-3

CONTENTS (continued)

Page

5.5.4.1 Surveillance Requirements 5.5-4

5.5.5 Programmatic Administrative Controls 5.5-4

5.5.6 Organization 5.5-5

5.5.7 Facility Staff 5.5-5

5.5.8 Staff Qualification and Training 5.5-5

5.5.9 Response Plan 5.5-6

5.5.10 Facility Review and Assessment 5.5-7

5.5.11 Independent Review and Assessment 5.5-7

5.5.12 Technical Safety Requirements and Technical Safety Requirements Bases Control 5.5-7

5.5.13 Procedures, Programs, and Manuals 5.5-7

5.5.14 Area Emergency Plan 5.5-8

5.5.15 Facility Fire Protection Program 5.5-8

5.5.16 Configuration Control Program 5.5-8

5.5.17 Environmental Compliance Program 5.5-9

5.5.18 Radiological Protection Program 5.5-9

5.5.19 Quality Assurance Program 5.5-9

5.5.20 Nuclear Criticality Safety Program 5.5-10

5.5.21 Installed Process Instrumentation and Measuring and Test Equipment 5.5-10

5.5.22 Hazardous Material Inventory Control Program 5.5-10

5.5.22.1 Radiological Inventory Control Facility Inventory (Specific Administrative Control) 5.5-10

CONTENTS (continued)

Page

5.5.22.2 Radiological Inventory Control Volatile Organic Compound Laboratory Modules (Specific Administrative Control) 5.5-11

5.5.22.3 Chemical Control Program 5.5-11

5.5.23 Propane Controls Program 5.5-11

5.5.24 High-Efficiency Particulate Air Filter Testing Program 5.5-12

5.5.25 Hydrogen Control (Specific Administrative Control) 5.5-12

5.5.26 Unreviewed Safety Question Program 5.5-12

5.5.27 Glovebox Physical Confinement Barrier Testing Program 5.5-12

5.5.28 Reporting Requirements 5.5-13

5.5.28.1 General Requirements 5.5-13

5.5.28.2 Technical Safety Requirements Violations 5.5-13

5.5.28.3 Conditions Outside of Technical Safety Requirements 5.5-14

5.5.29 Record Retention 5.5-14

5.5.30 Critical Lift Program 5.5-14

5.6 DESIGN FEATURES 5.6-1

5.6.1 Vital Passive Components 5.6-1

5.6.2 Configuration and Physical Arrangement 5.6-1

5.6.3 Site Characteristics 5.6-1

5.7 INTERFACE WITH TECHNICAL SAFETY REQUIREMENTS FROM OTHER FACILITIES 5.7-1

5.8 REFERENCES 5.8-1

ACRONYMS AND ABBREVIATIONS

AC	Administrative Control
CFR	Code of Federal Regulations
CHA	Consolidated Hazards Analysis
CW	Co-located Worker
DF	Design Feature
DOE	Department of Energy
EG	Evaluation Guideline
ETP	Effluent Treatment Process
F/H Lab	F/H Area Laboratory
FW	Facility Worker
HEPA	High-Efficiency Particulate Air
LCO	Limiting Condition for Operation
LCS	Limiting Control Setting
M&TE	Measuring and Test Equipment
MOI	Maximally-Exposed Offsite Individual
OEP	Onsite Evaluation Point
Pu	Plutonium
SAC	Specific Administrative Control
SAR	Safety Analysis Report
SL	Safety Limit
SR	Surveillance Requirement
SRNS	Savannah River Nuclear Solutions
SSC	Structure, System, and Component
STD	Standard
TRU	Transuranic
TSR	Technical Safety Requirements
VOC	Volatile Organic Compound
WAC	Waste Acceptance Criteria
WSRC	Washington Savannah River Company

5.0 DERIVATION OF TECHNICAL SAFETY REQUIREMENTS

5.1 INTRODUCTION

5.1.1 OBJECTIVE

The purpose of this chapter is to provide information that will satisfy the requirements of Title 10 Code of Federal Regulations (CFR) Part 830 and DOE Standard (STD) 3009-94 (Ref. 1, 2). This chapter builds upon the control functions determined to be essential in Chapters 3 and 4 of this Safety Analysis Report (SAR) and supports and provides the information necessary for preparing the Technical Safety Requirements (TSR) document required by 10 CFR 830 (Ref. 1). This chapter consists of summaries and references to pertinent sections of the SAR in which design and Administrative Control (AC) features are needed to prevent or mitigate the consequences of an accident. The Safety Limits (SLs), Limiting Control Settings (LCSs), Limiting Conditions for Operation (LCOs), Surveillance Requirements (SRs), Design Features (DFs), and necessary ACs determined in this chapter form the basis for the facility TSR and provide the logical link between the TSR and the SAR.

5.1.2 SCOPE

Expected products of this chapter, as applicable and based on the graded approach, include the following:

- Information with a sufficient basis to derive, as appropriate, any of the following TSR parameters for individual TSRs:
  - SLs
  - LCSs
  - LCOs
  - SRs
- Information with a sufficient basis to derive TSR ACs for specific control features or to specify programs necessary to perform institutional safety functions (e.g., Specific Administrative Controls [SACs] and Programmatic ACs)
- Identification of TSRs for all passive DFs addressed in the SAR
- Identification of TSRs from other facilities that affect the facility's safety basis

5.2 REQUIREMENTS

The objective of this Section is to identify the DOE Orders, standards, and regulations that are required to establish the safety basis of the facility. The primary requirements applicable to the derivation of TSRs are contained in the following documents:

- 10 CFR 830, Nuclear Safety Management (Ref. 1)
- DOE-STD-3009-94, Change Notice 3, Preparation Guide for U.S. Department of Energy Nonreactor Nuclear Facility Safety Analysis Reports (Ref. 2)
- Washington Savannah River Company Procedure Manual 11Q, Washington Savannah River Company Facility Safety Analysis Manual (Ref. 3)
- DOE Order 5400.5, Radiation Protection of the Public and the Environment (Ref. 4)
- DOE-STD-1186-2004, Rev 0, DOE Standard Specific Administrative Controls (Ref. 5)

5.3 TECHNICAL SAFETY REQUIREMENTS COVERAGE

5.3.1 FACILITY BACKGROUND

This Section presents the technical basis and rationale used in developing the TSR document for the F/H Area Laboratory (F/H Lab) in F Area. The F/H Lab is comprised of Buildings 772-F, 772-1F, 772-4F, and the B-25 waste container staging areas. The LR-56 loading station is part of the 772-F facility.

The F/H Lab provides analytical support principally to the 200-F and -H Areas and to the management of waste in the 100, 300, and 400 Areas. Buildings 772-F and 772-1F house laboratories, cells, and other ancillary facilities where samples are received, prepared for analysis, and analyzed. Building 772-4F contains the main exhaust system support facilities for Building 772-F.

5.3.2 APPLICATION OF METHODOLOGY

5.3.2.1 Technical Safety Requirements Methodology

Chapter 3 of this SAR was reviewed for any events that affect any of the identified population groups. Because the accidents were based upon a failure rate of equipment or human error, a frequency can be assumed for the event that allows for the determination of the credibility of the event. An event is said to be Beyond Extremely Unlikely (not likely to occur) if the frequency of occurrence is less than 1E-06/year, or the probability that less than one occurrence will happen every million years. The TSR protects only those events with higher probabilities, unless assumptions are made in the accident analysis fault tree that are necessary to ensure that the event remains Beyond Extremely Unlikely. During the review of the Chapter 3 accidents, the following methodology was implemented in determining the TSR limits and controls needed to ensure that the risk to the public or to the onsite workers is maintained below Evaluation Guidelines (EGs). This methodology screens out and identifies only those assumptions credited in maintaining risk below EGs.

- The accident event scenarios in the SAR were reviewed to identify those events with significant radiological or hazardous material consequences. The information obtained from this review included the assumptions used to calculate the accident frequency, the assumptions made with respect to the material at risk, the assumptions made that mitigate the consequences of a release, and the calculated onsite and offsite dose consequences as available.
- Assumptions (i.e., initial conditions and operability of Structures, Systems, and Components [SSCs]) credited in maintaining the consequences associated with event scenarios within EG limits were noted as requiring TSR control. The assumptions credited could have either consequence or frequency effects.

- Events noted as requiring TSR control were evaluated to determine if they require limits on process variables associated with those physical barriers, generally passive, that are necessary to prevent the uncontrolled release of radioactivity and other hazardous material. Identified controllable parameters (i.e., pressure and temperature) were established as SLs. The parameters represent the analyzed boundary assumed in the authorization basis. There were no SLs required for this facility. LCSs were created for settings on safety systems that control the process variables that prevent exceeding the SLs. There were no LCSs required for this facility.
- LCOs, DFs, or ACs were established for the other assumptions identified as requiring TSR control that do not meet the definition of SL or LCS. LCOs are limited to requirements on how the SSCs function to validate the basic safety analysis assumptions (i.e., operability of a credited interlock, pump, or cooling water system). LCOs are assigned to parameters or SSCs involved in an active function that the operator directly controls (i.e., starting a pump, closing a valve, or measuring a process parameter).
- ACs are selected for those provisions relating to organization and management, procedures, recordkeeping, assessment (reviews and audits), and reporting necessary to ensure the safe operation of a facility. There are two types of ACs: Programmatic ACs and SACs. Programmatic ACs are those broad safety management program functions credited in the SAR to prevent or mitigate the consequences from the hazards, and for the protection of the worker and/or public. Programmatic ACs also ensure the implementation and administration of the TSR (e.g., facility procedures, contractor organization and management, safety reviews and audits, and recordkeeping). For Programmatic ACs, failure to maintain all aspects of one of these programs will not result in a TSR violation unless there was a gross failure of the program, significant enough to render the SAR assumptions invalid (i.e., a programmatic breakdown).
- DFs are developed for passive SSCs credited in maintaining the consequences associated with event scenarios within the EGs since those features, if altered or modified, would have a significant effect on safe operation.
- SACs provide a specific preventive or mitigative function for hazard or accident scenarios identified in the SAR where the safety function has importance similar to, or the same as, the safety function of a Safety Class or Safety Significant SSC. SACs may also be needed to protect important initial conditions and assumptions of the hazard or accident analysis or provide the main mechanisms for hazard control in accordance with the guidance and criteria provided in DOE-STD-1186-2004 (Ref. 5). These controls provide more specific functions than implied by general commitments to safety management programs. Not meeting a SAC or a SAC with an associated action can result in a TSR violation. SACs can be written in an AC or LCO format. The credited controls identified as SACs are further discussed in Chapter 4 and are identified as SACs in this chapter.

5.3.2.2 Facility Evaluation

The F/H Lab operation/mission was analyzed for potential accidents that would result in radiological and chemical hazards affecting offsite and onsite populations. The consequences

were calculated for the Maximally-Exposed Offsite Individual (MOI) and onsite individuals. The MOI is defined as the theoretical individual at the closest point on the site boundary at the time of the accident. The CW is based on the last physical boundary for control of the event generally defined as 100 meters. The results are presented in Section 3.4.2 of this SAR.

Because numerical (quantifiable) EGs are not required for personnel located within or in the immediate proximity of the facility, the TSR developers must ensure that the appropriate TSRs are structured to reduce the risk to Facility Workers (FWs) and limit exposures to hazardous materials to levels permitted by federal or state regulations and relevant DOE Orders.

Because of the necessary and inherent presence of hazardous and radioactive materials at the F/H Lab, and the workers' proximity to these materials, it is impractical to reduce worker risk to an insignificant level through selection of operating limits in TSRs. For these reasons, process safety management programs, such as the As Low As Reasonably Achievable program, safety and health programs, and radiological inventory limits are addressed in the TSR ACs. These programs minimize workers' risk from hazardous and radioactive materials normally encountered in performing their duties in the facility.

5.3.2.3 Accidents Evaluated

The potential accidents are grouped into four categories based on accident initiators: man-made operational-related events, natural phenomena, man-made externally induced events, and criticalities.

The man-made operational-related events evaluated are as follows:

- Explosion
- Over-pressurization
- Fire
- Uncontrolled reaction

Other minor operational-related accidents (e.g., leak, spill, overflow, pluggage, corrosion, drum rupture, and drop/fall)

Operational-related events are discussed in detail in Section 3.4.2 of this SAR.

The natural phenomena events considered for analysis include straight winds and tornadoes, flood, earthquake, temperature, snow, ice, rain, lightning, and meteorite. Of these events, only straight winds and tornadoes and an earthquake are considered to potentially result in a radionuclide release and, therefore, are discussed in detail in Section 3.4.2 of this SAR.

The man-made externally induced events considered for analysis include aircraft crash, vehicle crash, adjacent explosion, and adjacent fires. Of these events, no man-made externally induced events were identified that would cause releases greater than the bounding full facility fire accidents at F/H Lab; therefore, no further analysis was performed for external events.

In addition to the previously postulated accidents, DOE-STD-3009-94 requires the evaluation of nuclear criticality (Ref. 2). Nuclear criticality is discussed in detail in Section 3.4.3 and Chapter 6 of this SAR.

A review of the previously stated accidents did not identify any postulated accidents that would exceed the EGs of DOE-STD-3009-94 and Manual E7 provided controls are in place to lessen the consequences or frequency (Ref. 2, 11). Chapter 3, Appendix B, identifies the events contained in the Consolidated Hazards Analysis (CHA) (Ref. 6) that exceeded or challenged the guidelines along with the DFs and ACs required to prevent or minimize the release of material due to these postulated accidents. The TSR ACs for the accidents evaluated are described in Section 5.5.

5.4 DERIVATION OF FACILITY MODES

A mode is a set of operational constraints based on the hazards associated with operational activities being conducted at any given time. Allowable operations are defined by the specific mode of the facility. The function of the F/H Lab is to provide analytical support principally to the 200-F and -H Areas and to the management of waste in the 100, 300, and 400 Areas. As such, operational activities in the F/H Lab consist of receiving samples, preparing samples for analysis, transporting samples to laboratories, and analyzing the respective samples.

The operations performed in the F/H Lab involve the movement and sampling of radioactive materials. The actual movement and analyzing of samples are the major activities that can result in the normal release scenarios. When the activities are suspended, the facility has been placed in a state that is considerably more safe. Therefore, the distinction of the modes is based upon this fact.

Operations in the Building 772-F, 772-1F, and 772-4F process areas occur in one of three operational modes:

1. Operation: A mode in which the facility or process area can perform its intended function. Radioactive and/or fissile material may be in the process area(s). Activities permitted include, but are not limited to, material movement, sample preparation, sample analyses, waste removal/transfers, project renovations, decontamination activities and routine items changeout. Containment unit access panels (e.g., glovebox access panels, windows, etc) in each process area shall be installed. The facility or process area mission is being performed.

2. Warm Standby: A mode in which transfers or movement of radioactive and/or fissile material involving greater than residual quantities are not allowed in the facility or process area, except as provided by an approved response plan or approved emergency or abnormal response procedures. Radioactive and/or fissile material may be present within the facility or process area. The facility or process area mission is not being performed.

3. Maintenance: A mode in which transfers or movement of radioactive and/or fissile material are not allowed in the facility or process area, except as provided by an approved response plan or approved emergency or abnormal response procedures. Radioactive and/or fissile material involving greater than residual are not present within the facility or process area. transient combustibles in the facility or process area are managed by permit under the facility fire protection program. The facility or process area mission is not being performed.

5.5 TECHNICAL SAFETY REQUIREMENTS DERIVATION

Following are the ACs included in the TSRs and a discussion of their derivation. The review of F/H Lab-postulated accidents discussed in Section 3.4 of the SAR and the CHA indicates that TSR ACs are needed for the events in this Section to protect the workers and to maintain the assumptions credited in the accident analysis. Required controls determined in the CHA are summarized in Chapter 3, Appendix B.

Based on the hazard and accident analysis, SACs, per DOE-STD-1186 (Ref. 5), are required for the F/H Lab. These are the Hydrogen Control Limit, the Radiological Material Inventory Limits (facility and Volatile Organic Compound [VOC]), and Container Configuration FSR MAR are discussed in detail in Chapter 4.

5.5.1 BUILDING 772-F FIRE SUPPRESSION SYSTEMS (LCO 3.1.1)

The Building 772-F FSS shall be operable when radiological or fissile material greater than residual, excluding waste, are present. The FSS may be not operable due to conditions that impact the entire system (e.g., seismic events, external impacts or no fire fighting water available to the entire building) or a condition that impacts a portion of the system that affects discrete locations within the building (e.g., damage to branch piping and sprinkler heads in one room). If the FSS is not operable, operations in the affected rooms and/or locations may continue for 90 days, provided fire patrols are conducted immediately and every 3 hours thereafter in the affected rooms and/or locations. The compensatory measure for continued inoperability of the FSS (i.e., greater than 90 days) is transitioning to maintenance mode or development and initiation of a Response Plan within 7 days. The completion times are based on engineering judgment that considered National Fire Protection Association (NFPA) Code requirements, reasonable times to restore compliance with this LCO, and minimizing the time-at-risk while relying on compensatory measures.

These conditions that ensure operability of Building 772-F Fire Suppression System are protected by the following SRs.

5.5.1.1 Surveillance Requirements

In order to ensure the continued operability of the Building 772-F FSS and the performance of the safety function, the following SRs shall be performed in the prescribed frequency:

- An annual visual inspection of the wet sprinkler pipe and fittings visible from the floor
- An annual visual inspection of the wet pipe sprinkler heads visible from the floor
- An annual functional test of each main drain

SR frequencies are based on NFPA Code requirements and engineering judgment that considered the failure rates of the FSS.

5.5.2 BUILDING 772-1F FIRE SUPPRESSION SYSTEMS (LCO 3.1.2)

The Building 772-1F FSS shall be operable when radiological or fissile material greater than residual, excluding waste, are present. The FSS may be not operable due to conditions that impact the entire system (e.g., seismic events, external impacts or no fire fighting water available to the entire building) or a condition that impacts a portion of the system that affects discrete locations within the building (e.g., damage to branch piping and sprinkler heads in one room). If the FSS is not operable, operations in the affected rooms and/or locations may continue for 90 days, provided fire patrols are conducted immediately and every 3 hours thereafter in the affected rooms and/or locations. The compensatory measure for continued inoperability of the FSS (i.e., greater than 90 days) is transitioning to maintenance mode or development and initiation of a Response Plan within 7 days. The completion times are based on engineering judgment that considered National Fire Protection Association (NFPA) Code requirements, reasonable times to restore compliance with this LCO, and minimizing the time-at-risk while relying on compensatory measures.

These conditions that ensure operability of Building 772-1F Fire Suppression System are protected by the following SRs.

5.5.2.1 Surveillance Requirements

In order to ensure the continued operability of the Building 772-1F FSS and the performance of the safety function, the following SRs shall be performed in the prescribed frequency:

- An annual visual inspection of the wet pipe sprinkler pipe and fittings visible from the floor
- An annual visual inspection of the wet pipe sprinkler heads visible from the floor
- An annual functional test of each main drain

SR frequencies are based on NFPA Code requirements and engineering judgment that considered the failure rates of the FSS.

5.5.3 CONTAINER CONFIGURATION FSR MAR 772-F [SPECIFIC ADMINISTRATIVE CONTROL] (LCO 3.2.1)

The Radionuclide Inventory Control limits radionuclide inventories (based on liquid form) to ensure that accident consequence values remain below those listed in Table 3.4-2, Part A. The accident analysis assumed a subset of the radionuclide inventory within the total inventory for a Building in liquid form is released via flashing spray in the fire related accident events. Limits are listed in Chapter 3, Table 3.3-3.

Liquid radionuclide inventory stored in sealed containers could become pressurized and heated to temperatures higher than the liquid's normal boiling point during fire related accidents. A subsequent failure of the container could lead to a situation in which the superheated liquid radionuclide material is released as a flashing spray. Consequently, container type determines

whether the liquid radionuclide inventory is susceptible to flashing spray release. The following types of containers are not susceptible to flashing spray release: high density polyethylene, low density polyethylene, polyethylene terephthalate glycol, and polypropylene or any combination of container and cap where at either the container or cap has a melting point less than 200°C. Metal containers (e.g., "paint cans," carbon steel pails and 10-gallon drums used for overpacking) are not for primary containment. The release mechanism in this case would be defined as a pressurized release but not a flashing spray release. Stainless steel vials used for samples from waste tank samples will likely lose seal integrity and vent contents under a pressurized release model. Therefore, the contents of these containers do not contribute to flashing spray (Ref. 14). The Inventory Surveillance controls the building liquid radionuclide inventory susceptible to flashing spray release. The curie limits for building liquid radionuclide inventory susceptible to flashing spray release are based on conservative values assigned to multiple accountable items within the facility. The worse case of four classes of radionuclides were selected to represent the FSR building liquid inventory for the dose consequences. Using conservative values on a per item basis and the worse case radionuclides provides sufficient conservatism for the dose consequences.

Compliance shall be verified by performing a surveillance on liquid radionuclide inventories to determine the sum of the curies assigned to the liquid radionuclide inventory stored in containers susceptible to flashing spray release.

Since liquid radionuclide inventory stored in containers susceptible to flashing spray release may be present in Building 772-F, this LCO is applicable in OPERATION and WARM STANDBY MODES.

5.5.3.1 Surveillance Requirements

A Semiannual inventory that accountable quantities of liquid radionuclides stored in containers susceptible to flashing spray release are less than or equal to the limits in Chapter 3, Table 3.3-3

5.5.4 CONTAINER CONFIGURATION FSR MAR 772-1F [SPECIFIC ADMINISTRATIVE CONTROL] (LCO 3.2.2)

The Radionuclide Inventory Control limits radionuclide inventories (based on liquid form) to ensure that accident consequence values remain below those listed in Table 3.4-2, Part A. The accident analysis assumed a subset of the radionuclide inventory within the total inventory for a Building in liquid form is released via flashing spray in the fire related accident events. Limits are listed in Chapter 3, Table 3.3-4.

Liquid radionuclide inventory stored in sealed containers could become pressurized and heated to temperatures higher than the liquid's normal boiling point during fire related accidents. A subsequent failure of the container could lead to a situation in which the superheated liquid radionuclide material is released as a flashing spray. Consequently, container type determines whether the liquid radionuclide inventory is susceptible to flashing spray release. The following types of containers are not susceptible to flashing spray release: high density polyethylene, low density polyethylene, polyethylene terephthalate glycol, and polypropylene or any combination

of container and cap where at either the container or cap has a melting point less than 200°C. Metal containers (e.g., “paint cans,” carbon steel pails and 10-gallon drums used for overpacking) are not for primary containment. The release mechanism in this case would be defined as a pressurized release but not a flashing spray release. Stainless steel vials used for samples from waste tank samples will likely lose seal integrity and vent contents under a pressurized release model. Therefore, the contents of these containers do not contribute to flashing spray (Ref. 14). The Inventory Surveillance controls the building liquid radionuclide inventory susceptible to flashing spray release. The curie limits for building liquid radionuclide inventory susceptible to flashing spray release are based on conservative values assigned to multiple accountable items within the facility. The worse case of four classes of radionuclides were selected to represent the FSR building liquid inventory for the dose consequences. Using conservative values on a per item basis and the worse case radionuclides provides sufficient conservatism for the dose consequences.

Compliance shall be verified by performing a surveillance on liquid radionuclide inventories to determine the sum of the curies assigned to the liquid radionuclide inventory stored in containers susceptible to flashing spray release.

Since liquid radionuclide inventory stored in containers susceptible to flashing spray release be present in Building 772-1F, this LCO is applicable in OPERATION AND WARM STANDBY MODES.

5.5.4.1 Surveillance Requirements

A Semiannual inventory that accountable quantities of liquid radionuclides stored in containers susceptible to flashing spray release are less than or equal to the limits in Chapter 3, Table 3.3-4

5.5.5 PROGRAMMATIC ADMINISTRATIVE CONTROLS

This AC is included, based on DOE G 423.1-1 (Ref. 7), which discusses Contractor Responsibility as an administrative requirement necessary to control the operation of the facility, such that it meets the TSR. The Shift Manager/Facility Emergency Coordinator or Alternate Facility Emergency Coordinator shall be responsible for the local command function of the Facility (NOTE: References to Shift Manager/Facility Emergency Coordinator or Alternate Facility Emergency Coordinator shall also include an individual with an equivalent title and function to address future organizational changes). During any unavailability of the Shift Manager/Facility Emergency Coordinator or Alternate Facility Emergency Coordinator while the facility is in Operation or Warm Standby Mode, a qualified individual shall be designated to assume the command function. As part of this command function, the Shift Manager/Facility Emergency Coordinator or Alternate Facility Emergency Coordinator or designee shall ensure that the operation of the facility is in accordance with an approved TSR.

5.5.6 ORGANIZATION

This AC is included based on DOE G 423.1-1, which discusses Contractor Organization as an administrative requirement necessary to control operations of the facility, such that it meets the TSR (Ref. 7). This section contains subsections to address organization and facility staff.

Lines of authority, responsibility, and communication shall be established for the highest management levels, through intermediate levels, to and including all operating organization positions. These relationships shall be documented and updated, as appropriate, in the form of organization charts, functional descriptions of departmental responsibilities and relationships, and job descriptions for key personnel positions, or in equivalent forms of documentation.

The Facility Manager shall be responsible for the overall safe operation of the facility and shall have control over those activities necessary for safe operation and maintenance of the facility.

The individuals who train the operating staff, carry out radiological control functions, or perform quality assurance functions may report to the Facility Manager, however, they shall have sufficient organizational freedom to ensure their independence from operating pressures.

5.5.7 FACILITY STAFF

The facility staff organization is as follows:

- Each on-duty shift in the Operation or Warm Standby Mode shall be composed of at least one Shift Manager or FLM with Facility Emergency Coordinator qualification. A protocol must be in place to ensure prompt communications via the area pager system, telephone call-in, or other means when reliable radio communication is not available.
- A current list of facility support personnel who may be called in shall be maintained.
- Site level procedures shall be followed to limit the working hours of staff who performs safety related functions (e.g., personnel required in meeting the Minimum Shift Crew Composition). Procedures shall include the maximum working hours and the maximum number of consecutive days on duty. Adequate shift coverage shall be maintained without routine heavy use of overtime.

5.5.8 STAFF QUALIFICATION AND TRAINING

This AC is included based on DOE G 423.1-1, which discusses Staff Training and Qualifications as an administrative requirement necessary to control operations of the facility, such that it meets the TSR (Ref. 7). This section contains subsections to address staff training and qualifications.

Qualification requirements shall be determined for the identified Facility staff. A program shall be established to ensure that Facility staff meet established qualification requirements for their positions. Minimum qualifications for personnel assuming the command function, as described in Section 5.5.3 of this TSR, shall include the following:

a. Must be qualified as a Facility Emergency Coordinator

b. Must be qualified on Site Item Reportability and Issue Management reporting

c. Must be qualified on F/H Lab alarm response cards

The qualification program shall adhere to qualification requirements established in accordance with applicable DOE regulations and Site procedures.

An initial training and continuing program for the identified Facility staff shall be established and maintained. This program shall adhere to training requirements established to meet command function qualification and other identified positions and shall be established in accordance with applicable DOE regulations and Site procedures. For command function positions, training shall include familiarization with relevant industry operational experience.

5.5.9 RESPONSE PLAN

Although not required by DOE G 423.1-1, this AC is included to ensure that direction is provided for facility staff on restoration actions. The purpose of the Response Plan is to ensure that additional analysis or administrative and management controls are in place when abnormal situations arise and the facility is outside of the normal operating conditions defined by the TSR and an approved procedure does not currently exist to address the situation. The Response Plan has two functions. The first function is to restore the facility to a safe condition. The second function is to determine what further actions are required to ensure that the facility is within the requirements of the TSR. The Response Plan is intended to provide personnel with the direction needed to safely accomplish a stated endpoint. The plan, however, does not prohibit reliance upon operator training and experience in the correction of the condition of an unsafe or worsening condition. Operations allowed by the Response Plan shall be evaluated using the Unreviewed Safety Question process prior to performance in accordance with Manual 11Q (Ref. 3).

Response Plans would primarily be used to identify corrective actions when the requirements for the ACs are not met and an approved emergency procedure or abnormal response procedure does not currently exist to address the situation. The Response Plan should state what operations are permitted, including the initial conditions and precautions necessary to perform the operations in a safe manner.

Prior to implementation, the Response Plan shall be approved by the Facility Operations Safety Committee and the Facility Manager for submittal to DOE and processed in accordance with TSR change procedures, including obtaining DOE approval. Upon DOE approval of the Response Plan, all future facility activities necessary to restore compliance with the TSR are required to be performed under the Response Plan. DOE approval for closure or termination of the Response Plan is not required once TSR compliance is restored.

The Response Plan may permit any activity required to establish or maintain a safe condition or to restore compliance with the TSR. The Response Plan should be developed, approved, and initiated within 7 Days.

5.5.10 FACILITY REVIEW AND ASSESSMENT

This AC is included based on the DOE G 423.1-1, which discusses reviews and audits as an administrative requirement necessary to control the operation of the facility such that it meets the TSR (Ref. 7). This section contains subsections to address Facility Review and Assessments, Facility Operations Safety Committee, and Independent Review and Assessment.

Facility personnel shall establish and maintain individual reviews and self-assessments of facility and staff in accordance with Manual 12Q (Ref. 8). These reviews may be performed by individual reviewers, self-assessments, or by the Facility Operations Safety Committee. Reviewers shall possess sufficient education, experience, expertise, and safety analysis and technical training in the review subject area.

5.5.11 INDEPENDENT REVIEW AND ASSESSMENT

Facility personnel shall request an independent organization to perform a periodic assessment of facility activities and environmental, safety, health, and quality assurance programs affecting nuclear safety in accordance with Manual 1Q (Ref. 9).

The independent assessment shall provide for the integration of the reviews and audits into a cohesive program to provide senior-level management with an assessment of facility operation and recommend actions to improve nuclear safety.

5.5.12 TECHNICAL SAFETY REQUIREMENTS AND TECHNICAL SAFETY REQUIREMENTS BASES CONTROL

This AC is included based on DOE G 423.1-1, which requires revisions to the TSR to be submitted to DOE for review with the basis for the proposed change and be approved by DOE before it is implemented (Ref. 7). Changes to the TSR and to the Bases of the TSR shall be made under appropriate ACs and reviewed according to Section 5.5.6. Proposed changes to the TSR and to the TSR Bases are reviewed and approved by DOE prior to implementation.

5.5.13 PROCEDURES, PROGRAMS, AND MANUALS

This AC is included based on DOE G 423.1-1 (Ref. 7), which discusses Procedures, Programs, and Manuals as an administrative requirement necessary to provide sufficient direction to ensure that the facility is operated within its design basis and support safe operations of the facility. The type of procedures required by the TSRs along with the mechanisms for review, approval, revision, control, and temporary changes are described. Programs and Manuals are discussed in the following sections.

Written procedures are established, implemented, reviewed, and maintained as set forth in administrative procedures and Manual 2S (Ref. 10).

5.5.14 AREA EMERGENCY PLAN

The Area Emergency Plan performs a Safety Significant function and it delineates the pre-planned responses to emergencies to assure personnel are evacuated from within and around the outside of the building to a safe location. This AC performs a Safety Significant function. The Emergency Preparedness Program defines appropriate response measures for the management of emergencies within the facility. Response measures provided by the plan are designed to mitigate the potential consequences of an emergency. The plan is credited with proper worker response during operational emergencies; therefore, the facility also needs to ensure the appropriate amount of training (drills, exercises, etc.) is done. Training ensures that the FWs will respond correctly, if its implementation is ever required. This program is also credited with supporting detection of emergency conditions and issuing appropriate alarms/notifications.

The shelter alarm defines general area response when outside FWs (OEP, CW) could be exposed to hazardous material above onsite EGs. During such times, an alarm is required to warn outside workers to seek shelter. Response measures provided by the plan are designed to mitigate the potential consequences of a hazardous material release to the worker outside the modules.

The evacuation to rally point notification defines general area response when conditions in the facility warrant moving the FW and CW to a safe distance from the facility to minimize exposure.

5.5.15 FACILITY FIRE PROTECTION PROGRAM

This AC performs a Safety Significant function. The Fire Protection Program provides the procedures and controls to minimize the consequence of fires. The Fire Protection Program and the Worker Qualification and Training Program incorporate features of fire prevention, fire detection, and fire response.

Fire prevention includes:

- Fire-resistive construction, control of combustible loading, control of ignition sources, control of combustible/flammable liquids, control of flammable gases, and facility inspections

Fire control includes:

- Automatic detection/suppression systems, alarm systems, Fire patrol/watches as required, facility fire fighting equipment capability maintained, Emergency Response Organization, fire control pre-plans, and Safety Significant fire suppression systems.

5.5.16 CONFIGURATION CONTROL PROGRAM

Facility personnel shall establish and maintain a Configuration Control Program, as per Manual E7 (Ref. 11) that does the following:

a. Identifies and documents the Safety Class and Safety Significant SSCs, and computer software technical baseline, (as applicable)

b. Ensures that technical baseline changes are properly developed, assessed, approved, issued, and implemented

c. Maintains a system for recording, safeguarding, and indicating the technical baseline documentation status on a current basis

d. Controls the configuration of the SSCs specified in the DFs section of the TSR to maintain their designed function

Configuration and physical arrangement of components and structures in the F/H Lab Facility have been credited in the safety analysis. The configuration and physical arrangement of the SSCs, listed in Table 4.4-1 of Chapter 4, are discussed in Chapters 2 and 4. A Configuration Control Program and an Unreviewed Safety Questions process shall be required to protect the DFs.

5.5.17 ENVIRONMENTAL COMPLIANCE PROGRAM

The Environmental Compliance Program shall comply with all applicable federal and state environmental regulations. The facility shall follow site and facility procedures governing the applicable environmental regulations.

5.5.18 RADIOLOGICAL PROTECTION PROGRAM

This AC performs a Safety Significant function. The Radiological Protection Program, procedures, training and monitoring ensures that the radiation exposure of workers is As Low As Reasonably Achievable. This AC defines the programs and associated training to prepare operators to take proper actions to protect themselves during “other minor operational-related accidents” events. The actions required will depend on the specific circumstance (e.g., form of hazard, amount of hazard, protective clothing required). Routine surveys of glovebox physical barriers, which are required to prevent further spread of contamination during “other minor operational-related accidents” events, is another attribute of this program, and is discussed in Section 5.5.23. This program performs a Safety Significant function.

The program will ensure that the individual and collective radiation exposures are minimized during process activities and Design Basis Accident events. Additionally, the FW is expected to be familiar with the alarms and the responses to those alarms.

5.5.19 QUALITY ASSURANCE PROGRAM

Facility personnel shall establish and maintain a facility Quality Assurance Program requiring that sufficient records be maintained to preserve technical baseline documentation and support self-assessment requirements to ensure compliance with Manual 1Q (Ref. 9).

5.5.20 NUCLEAR CRITICALITY SAFETY PROGRAM

In the nuclear criticality analysis, Section 3.4 of this SAR and in the CHA, certain programmatic requirements and controls are to be in place that precludes the potential for a criticality accident. The control of fissile mass is one limiting parameter supported by numerous other controls that are strong impediments to a criticality accident. The requirements identified in the Nuclear Criticality Safety Evaluations supporting the Chapter 3 and the CHA must be protected under this program which implements Manual SCD-3 (Ref. 13). This program performs a Safety Significant function. Maintaining the programmatic requirements, assumptions, and controls ensures that the facility is operated within analyzed conditions.

5.5.21 INSTALLED PROCESS INSTRUMENTATION AND MEASURING AND TEST EQUIPMENT

- There were no Installed Process Instrumentation items required in the safety analysis. The only Measuring and Test Equipment (M&TE) item required is the particle removal efficiency testing instrumentation used for testing the High-Efficiency Particulate Air (HEPA) filters. Controls shall include traceability of TSR related M&TE items, calibration frequencies for TSR related M&TE items, and evaluation of TSR related M&TE items outside calibration tolerances.

5.5.22 HAZARDOUS MATERIAL INVENTORY CONTROL PROGRAM

An administrative program shall be established and implemented to ensure the F/H Lab hazardous material inventories are maintained within the SAR established limits and support source term assumptions used in the accident analyses. No other hazardous materials are allowed within the facility unless approved by the Material Inventory Control Program. The program shall include both a Radiological Inventory Control Program and a Chemical Control Program. Best management practice limits the radiobench/radiohoods to inventory less than Hazard Category 3 threshold quantities.

5.5.22.1 Radiological Inventory Control Facility Inventory (Specific Administrative Control)

The Radiological Inventory Control Program performs a Safety Significant function in Building 772-F, Building 772-1F, and the B-25 Waste Container Staging Area. The function of the Radiological Inventory Control Program is to limit the radionuclides to within the source-term assumptions used in the F/H Lab accident analyses. This AC provides the level of control that protects the source terms used as input into the qualitative analysis used in the CHA and the quantitative accident analyses described in this SAR, Section 3.4. The facility inventory control limits for both 772-F, 772-1F, and the B-25 Waste Container Staging Area are listed in Tables 3.3-3, 3.3-4, and 3.3-5 of this SAR. This AC ensures that the inventory is operated within the analyzed conditions. This AC was identified in Chapter 4 as a SAC.

5.5.22.2 Radiological Inventory Control Volatile Organic Compound Laboratory Modules (Specific Administrative Control)

The Radiological Inventory Control Program performs a Safety Significant function in Building 772-F and Building 772-1F. The function of the Radiological Inventory Control VOC gloveboxes is to limit the radionuclides to within the source-term assumptions used in the F/H Lab accident analyses. This AC provides the level of control that protects the source terms used as input into the qualitative analysis used in the CHA and the quantitative accident analyses described in this SAR, Section 3.4. The facility inventory control limits for 772-1F serves to protect this inventory. For 772-F the limit is listed in Tables 3.3-3 of this SAR. This AC ensures the inventory is operated within analyzed conditions. This AC was identified in Chapter 4 as a SAC.

5.5.22.3 Chemical Control Program

The Chemical Control Program performs a Safety Significant function. The program identifies the chemicals that are used during normal operations of Buildings 772-F and 772-1F, designates chemicals that present hazards to the laboratory workers, and provides controls to prevent accidents. The program requires identification and separation of reactive chemicals and management of time sensitive chemicals. The controls established by this AC provide the procedures and controls to prevent chemical events within the facility.

NOTE: Compliance with applicable regulations (Occupational Safety and Health Act and National Fire Protection Association) and conservative laboratory practices for chemical handling are the primary components of this system. Control of chemicals as it relates to concurrent radioactive material handling is addressed by controls provided by the Radiological Inventory Control Program, discussed in preceding sections.

5.5.23 PROPANE CONTROLS PROGRAM

This AC performs a Safety Significant function. The program establishes and implements controls and procedures to ensure that propane usage is controlled and supports assumptions used in the accident and hazard analyses. This program requires the following:

No more than one full 20-pound propane cylinders are in a laboratory room or module where activities or operations involve radioactive and/or fissile material. This meets the intent for defining the extent of damage as a result of an event.

No more than three full 20-pound propane cylinders are allowed in 772-F or 772-1F. This protects one factor in the frequency basis.

Laboratory propane is not available for use inside a glovebox. This protects against an unanalyzed condition of reaching lower flammability limit under normal ventilation.

This AC is programmatic. Per the CHA, the propane controls are a program that prevents and mitigates an event that could involve a glovebox deflagration. The primary controls of a

glovebox deflagration are the Radiological Inventory control and Hydrogen control. The accident scenario discusses the leak of a single propane bottle. Leak rates have not been defined in the SAR. The ventilation system is not credited with diluting the contents. The limitations on propane protects the description of the accident not a consequence or calculation assumption. The limitation on the number of bottles is based on a quantitative frequency for a propane explosion as unlikely. A single failure resulting in more than three bottles within the facility would not significantly alter the frequency and result in an unanalyzed condition.

5.5.24 HIGH-EFFICIENCY PARTICULATE AIR FILTER TESTING PROGRAM

This AC is designated Safety Significant as a customer preference performing a significant function as Defense In Depth. Periodic testing confirms the leak path for the filter and housing seal are within standard limits. In the event of a radionuclide release during an accident while the ventilation fan (non-Safety Significant) is operating, discharge from the facility is minimized by the filtration path. No credit is taken for the filtration effect in the accident analyses.

A filter testing program periodically tests the HEPA filters in accordance with national standards (American Society of Mechanical Engineers N510, “Testing of Nuclear Air Cleaning Systems”) to ensure the required particle-removal efficiency of the filters. The HEPA filters in the Main Exhaust System in Building 772-4F and the 772-F Shielded Cells shall be tested. The operability of the above exhaust systems is demonstrated by any one HEPA filter stage between the source of the airborne material and the release point to the atmosphere. The HEPA filter testing program ensures the 772-F Main Exhaust System HEPA filters in Building 772-4F and 772-F Shielded Cells HEPA filters perform the required filtration function.

5.5.25 HYDROGEN CONTROL (SPECIFIC ADMINISTRATIVE CONTROL)

This AC performs a Safety Significant function. The controls established by this AC Program ensure segregation of hydrogen generating activities and VOCs by limiting hydrogen generating activities to those gloveboxes which DO NOT contain VOC liquids or gels. This protects the assumption that if the event were to occur it would be a deflagration or a detonation involving organic compounds. This AC was identified in Chapter 4 as a SAC.

5.5.26 UNREVIEWED SAFETY QUESTION PROGRAM

A program shall be established, implemented, and maintained for Unreviewed Safety Questions, based on the requirements in 10 CFR 830 Subpart B.

5.5.27 GLOVEBOX PHYSICAL CONFINEMENT BARRIER TESTING PROGRAM

The Physical Confinement Barrier Testing Program is part of the Radiological Protection Program. This program requires a surveillance of the physical confinement for radiological gloveboxes. This AC performs a Safety Significant function. The physical confinement barrier provided by gloveboxes must be routinely checked to ensure that workers are not exposed to

greater than Hazard Category 3 quantities of radiological materials. This function is considered performing a Defense In Depth for the primary Engineered control. The radiological surveys and visual inspections will provide an early warning of any significant glovebox component degradation ensuring that the gloveboxes maintain separation of radiological material from the workers.

This can be achieved by checking the gloveboxes and their main working components (light wells are not considered major working components) for radiological contamination via standard survey techniques and visual examination. Only Advanced Radiological Workers or personnel with constant Radiological Control Operations coverage (e.g., Maintenance or Construction) shall be allowed to work in gloveboxes containing radiological materials. Training material for both Advanced Radiological Workers and Radiological Control Operations inspectors shall include the requirements for performing the inspection, radiologically surveying, and visually inspecting the condition of the following:

- Glovebox gloves
- Glove port seals
- Plugs
- Window seals

The inspections will be conducted before use each shift the glovebox is in use.

5.5.28 REPORTING REQUIREMENTS

This AC is included based on DOE G 423.1-1 (Ref. 7), which discusses Reporting Requirements as an administrative requirement necessary to control operation of the facility such that it meets the TSR. This section contains subsections to address general requirements, TSR violations, and conditions outside the TSR.

5.5.28.1 General Requirements

Facility personnel shall establish and maintain a program requiring written reports and oral notifications to be prepared in accordance with appropriate procedures and submitted to DOE in accordance with Manual 9B (Ref. 12). These reports and notifications shall be prepared per approved procedures and shall be reviewed and approved by SRNS line management prior to DOE submittal.

5.5.28.2 Technical Safety Requirements Violations

Violations of the TSR occur as a result of programmatic noncompliance with the potential for serious consequences or repeated neglect of a TSR AC requirement. Failure to comply with a SAC also constitutes a TSR violation. Based on the hazard and accident analysis, two SAC per

DOE-STD-1186 (Ref. 5) are required for the F/H Lab. These are the Hydrogen Control, and the Radiological Material Inventory Controls, and are discussed in detail in Chapter 4. TSR violations must be reported to DOE in accordance with applicable DOE reporting requirements.

5.5.28.3 Conditions Outside of Technical Safety Requirements

In an emergency, if a situation develops that is not addressed by the requirements and ACs of this SAR, SRS personnel are expected to use their training and expertise to take actions to correct or mitigate the situation. Also, SRS personnel may take actions that depart from the requirements in this SAR provided that (a) an emergency situation exists; (b) these actions are needed immediately to protect facility personnel or public health and safety; and (c) no action consistent with the requirements and ACs of this SAR can provide adequate or equivalent protection. Such action must be approved minimally by a trained manager.

5.5.29 RECORD RETENTION

This AC is included based on DOE G 423.1-1, which discusses Record Retention as an administrative requirement necessary to control operation of the facility such that it meets the TSR (Ref. 7). Facility personnel shall establish and maintain a Records Retention Program in accordance with Manual 1Q (Ref. 9).

5.5.30 CRITICAL LIFT PROGRAM

A critical lift program for movement of loads over SS SSCs shall be implemented. This program shall provide assurance that the movement of loads over these locations is conducted in a manner that will minimize the potential of damaging SS SSCs due to load drop accidents. The program shall include, as a minimum, the following attributes:

- Minimization of lifting heights
- Verification of load charts
- Lift stability
- Inspection of rigging equipment and components

5.6 DESIGN FEATURES

10 CFR 830 (Ref. 1) defines DFs as "those features not covered elsewhere in the TSRs that, if altered or modified, would have a significant effect on safety." The two areas required to be addressed are vital passive components and configuration and physical arrangement.

5.6.1 VITAL PASSIVE COMPONENTS

Components such as piping, valves, vessels, supports, and confinement structures are passive components, which, if altered, could have an effect on safety. The Passive components identified in Table 4.4-1 of Chapter 4 are credited in the safety analysis as performing a preventive or mitigative function. A Configuration Control Program and an Unreviewed Safety Questions process as described in the ACs Section of the TSR shall be required to protect these DFs. The DFs include the following:

- Building 772-F
- Building 772-1F
- Building 772-4F
- Gloveboxes (including flow orifice) (Building 772-F, 772-1F)
- Shielded Cells (Building 772-F, 772-1F)
- Main Exhaust System (Building 772-F)
- Off Gas Exhaust System Ventilation Tunnel (Building 772-F)
- Interior Walls (Building 772-F, 772-1F)

5.6.2 CONFIGURATION AND PHYSICAL ARRANGEMENT

Configuration and physical arrangement of components and structures in the F/H Lab Facility have been credited in the safety analysis. The configuration and physical arrangement of the SSCs listed in Section 5.6.1 are discussed in Chapters 2 and 4. A Configuration Control Program and an Unreviewed Safety Questions process as described in the ACs Section of the TSR shall be required to protect these DFs.

5.6.3 SITE CHARACTERISTICS

The location of the F/H Lab Facility, with respect to the site boundary, is a feature that is used in the analysis of the accident consequences to the public and workers. Changes in the site boundary would have an effect on the calculated accident consequences. Therefore, the location of the F/H Lab Facility meets the definition of a DF. The location of the F/H Lab Facility is described in Chapter 2.

5.7 INTERFACE WITH TECHNICAL SAFETY REQUIREMENTS FROM OTHER FACILITIES

The process-related interfaces between F/H Lab and any other process facilities are as follows:

- F/H Lab and H-Canyon for sample returns
- F/H Lab and Effluent Treatment Process (ETP) for low activity waste

In the conduct of various operations, F/H Lab will accumulate high activity sample returns and low activity aqueous waste as well as solid low-level, Transuranic (TRU), mixed, and hazardous wastes. The high activity aqueous is transferred by truck to Building 221-H for receipt and processing. The solid waste is packaged and sent to E-Area for storage.

F/H Lab, as are all other certified waste generators on site, is permitted to send packaged waste to E-Area for disposition. This waste is required to be packaged within the respective E-Area Waste Acceptance Criteria, which guarantees that E-Area remains bounded within their respective Authorization Basis.

Disposal of low activity waste is bounded by the F/H Lab Waste Compliance Plan, which implements the Waste Acceptance Criteria (WAC) requirements for the ETP facilities.

High Activity sample returns are limited to acceptance of the composition by the receiving organization to ensure compliance with their Authorization Basis.

Violation of the controls would not adversely impact the safety basis of F/H Lab but should the acceptance criteria of the receiving facility be exceeded, it could result in a TSR violation for the receiving facility.

5.8 REFERENCES

1. Nuclear Safety Management. Title 10 Energy, Code of Federal Regulations, Part 830, U.S. Department of Energy, Washington, DC, January 2006.

2. Preparation Guide for U.S. Department of Energy Nonreactor Nuclear Facility Safety Analysis Reports. DOE-STD-3009-94, CN3, U.S. Department of Energy, Washington, DC, March 2006.

3. Facility Safety Document Manual. Manual 11Q, Savannah River Nuclear Solutions, Aiken, SC.

4. Radiation Protection of the Public and the Environment. DOE Order 5400.5, Change 2, U.S. Department of Energy, Washington, DC, January 1993.

5. DOE Standard Specific Administrative Controls. DOE-STD-1186-2004, U.S. Department of Energy, Washington, DC, August 2004.

6. Consolidated Hazards Analysis for Operations in Building 772-F, 772-1F, 772-4F and B-25 Pad. WSRC-TR-2006-00099, Rev 5, Savannah River Nuclear Solutions , Aiken, SC, October 2009.

7. Implementation Guide for Use in Developing Technical Safety Requirements. DOE G 423 1-1, U.S. Department of Energy, Washington, DC, October 2001

8. Assessment Manual. Manual 12Q, Savannah River Nuclear Solutions, Aiken, SC.

9. Quality Assurance Manual (U). Manual 1Q, Savannah River Nuclear Solutions, Aiken, SC.

10. Conduct of Operations Manual. Manual 2S, Savannah River Nuclear Solutions, Aiken, SC.

11. "Conduct of Engineering and Technical Support," Procedure 2.25, Functional Classification. Manual E7, Savannah River Nuclear Solutions, Aiken, SC.

12. Site Item Reportability and Issue Management (SIRIM). Manual 9B, Savannah River Nuclear Solutions, Aiken, SC.

13. Nuclear Criticality Safety Manual. Manual SCD-3, Savannah River Nuclear Solutions, Aiken, SC.

14. Airborne Release and Respirable Fractions for Flashing Spray Releases for Laboratory Applications at SRNS, SRNS-TR-09-00431, Rev. 0, Aiken, SC

WSRC-SA-96-26
REV. 8

F/H LABORATORY FACILITY -
BUILDINGS 772-F, 772-1F, AND 772-4F
SAFETY ANALYSIS REPORT

CHAPTER 6

PREVENTION OF INADVERTENT CRITICALITY

May 2010

Savannah River
Nuclear Solutions, LLC
A Fluor Daniel Partnership

DISCLAIMER

This document was prepared by Savannah River Nuclear Solutions LLC (SRNS), under contract with the United States Department of Energy (DOE).

Release to and Use by Third Parties. As it pertains to releases of this document to third parties, and the use of or reference to this document by such third parties in whole or in part, neither SRNS, DOE, nor their respective officers, directors, employees, agents, consultants or personal services contractors (i) make any warranty, expressed or implied, (ii) assume any legal liability or responsibility for the accuracy, completeness, or usefulness, of any information, apparatus, product or process disclosed herein or (iii) represent that use of the same will not infringe privately owned rights. Reference herein to any specific commercial product, process, or service by trademark, name, manufacture or otherwise, does not necessarily constitute or imply endorsement, recommendation, or favoring of the same by SRNS, DOE or their respective officers, directors, employees, agents, consultants or personal services contractors. The views and opinions of the authors expressed herein do not necessarily state or reflect those of the United States Government or any agency thereof.

CONTENTS

Page

6.0 PREVENTION OF INADVERTENT CRITICALITY 6.1-1

6.1 INTRODUCTION 6.1-1

6.1.1 Applicability 6.1-1

6.1.2 Objectives 6.1-1

6.1.3 Scope 6.1-2

6.2 REQUIREMENTS 6.2-1

6.2.1 Applicable Department of Energy Orders 6.2-1

6.2.2 Applicable Standards 6.2-1

6.2.3 Applicable Regulations 6.2-2

6.3 CRITICALITY CONCERNS 6.3-1

6.3.1 Locations of Potential Criticality Hazards 6.3-1

6.3.2 Fissile Material Forms and Maximum Quantities 6.3-2

6.4 CRITICALITY CONTROLS 6.4-1

6.4.1 Engineering controls 6.4-1

6.4.2 Application of Double Contingency Principle 6.4-2

6.5 CRITICALITY SAFETY PROGRAM 6.5-1

6.5.1 Criticality Safety Organization 6.5-1

6.5.1.1 F/H Lab Facility Manager Authority and Responsibility 6.5-1

6.5.1.2 Nuclear Material Custodians 6.5-2

6.5.1.3 Cognizant Technical Function 6.5-2

6.5.1.4 Criticality Safety Committees 6.5-3

6.5.1.5 Administrative Plans and Procedures 6.5-3

6.5.2 Criticality Safety Plans and Procedures 6.5-3

6.5.2.1 Document Control 6.5-3

6.5.2.2 Material and Operational Controls 6.5-4

6.5.2.3 Posting of Nuclear Criticality Safety Limits 6.5-4

6.5.2.4 Review of Operations for Criticality Safety 6.5-4

6.5.2.5 Emergency Evacuation 6.5-4

6.5.2.6 Impact of Fire Protection on Criticality Safety 6.5-5

6.5.3 Criticality Safety Training 6.5-5

6.5.3.1 Sitewide Criticality Safety Training 6.5-5

6.5.3.2 Facility-Specific Criticality Safety Training 6.5-6

6.5.4 Determination of Operational Nuclear Criticality Limits 6.5-6

6.5.5 Criticality Safety Assessments/Audits 6.5-7

6.5.6 Criticality Infraction Reporting And Followup 6.5-7

6.5.6.1 Classification, Investigation, and Reporting 6.5-7

6.5.6.2 Actions for Criticality Infraction 6.5-8

6.5.6.3 Recovery from a Criticality Infraction 6.5-8

6.5.6.4 Corrective Action 6.5-8

6.6 CRITICALITY INSTRUMENTATION 6.6-1

6.7 REFERENCES 6.7-2

ACRONYMS AND ABBREVIATIONS

ALD	Analytical Laboratories Department
ANS	American Nuclear Society
ANSI	American National Standards Institute
CFR	Code of Federal Regulations
CSC	Criticality Safety Committee
CTF	Cognizant Technical Function
DOE	Department of Energy
DSA	Documented Safety Analysis
F/H Lab	F/H Area Laboratory
FEC	Facility Emergency Coordinator
HAD	High Activity Drain
MBA	Material Balance Area
MC&A	Material Control and Accountability
N&CSE	Nuclear & Criticality Safety Engineering
NCS	Nuclear Criticality Safety
NCSE	Nuclear Criticality Safety Evaluation
NCSRC	Nuclear Criticality Safety Review Committee
NIM	Nuclear Incident Monitor
NMS&S	Nuclear Materials Stabilization & Storage
PHR	Process Hazard Review
Pu	Plutonium
S/RID	Standards/Requirements Identification Document
SRNS	Savannah River Nuclear Solutions
SRS	Savannah River Site
SOM	Shift Operations Manager
TRU	Transuranic
TSR	Technical Safety Requirements
U	Uranium
USQ	Unreviewed Safety Question
WSRC	Washington Savannah River Company

6.0 PREVENTION OF INADVERTENT CRITICALITY

6.1 INTRODUCTION

The Savannah River Site (SRS) Standards/Requirements Identification Document (S/RID) Functional Area 18 (Ref. 3) requires each nuclear facility to establish a Nuclear Criticality Safety (NCS) Program. The features of the NCS Program, which satisfy the requirements of Department of Energy (DOE) Order 420.1B (Ref.9), are described in SCD-3 (Ref. 2). This chapter is written in accordance with Title 10 Energy, Code of Federal Regulations (CFR) 830 (Ref. 4). The NCS Program establishes, maintains, and defines the nuclear criticality safety principles, practices, and controls to be used for prevention of criticality accidents. This Program is a formal, documented system for the control of nuclear safety parameters and their bases, identification, and verification.

This Program has been successful in maintaining nuclear criticality safety at the F/H Area Laboratory (F/H Lab). There have been no accidental criticalities in the history of this facility.

Management Policy 4.5 (Ref. 1) states that this criticality safety program shall be established, maintained, and applied to any process, structure, or system that requires the control of at least one parameter for criticality safety purposes in accordance with SCD-3 (Ref. 2). The Nuclear Criticality Safety (NCS) program described in SCD-3 satisfies the DOE requirements as referenced in the Savannah River Site (SRS) Standards/Requirements Identification Documents (S/RID) Functional Area 18 (Ref. 2, 3). SCD-3 describes the provisions of the site-specific program for the prevention of an inadvertent criticality (Ref. 2).

6.1.1 APPLICABILITY

This chapter provides facility-specific information on the SRS Prevention of Inadvertent Criticality Program for F/H Lab to satisfy the requirements contained in Title 10 Code of Federal Regulations (CFR) 830 Nuclear Safety Management (Ref. 4). This chapter describes the facility-specific criticality safety and prevention program, which delineates requirements for criticality control and its implementation to reduce the likelihood of an inadvertent criticality. It is intended to describe the essential features of the program as it relates to facility safety and is not intended to represent the vehicle for review and approval of this criticality safety program. This chapter was prepared in accordance with the preparation guidelines provided in DOE-STD-3009-94 (Ref. 5).

6.1.2 OBJECTIVES

The objective of this chapter is to describe the provisions for preventing an inadvertent criticality in the F/H Lab. The F/H Lab NCS Program meets the requirements of SCD-3, and S/RID FA18, (Ref. 2, 3). Only those elements of the program applicable to the F/H Lab are described herein.

The products of this chapter, as delineated in DOE-STD-3009-94, include the following (Ref. 5):

- Summary of the F/H Lab-specific NCS prevention policy and program
- Description of the basis and analytical approach used by the facility to derive operational criticality limits
- Summary of design and administrative controls used by the criticality prevention program
- Application of the Double Contingency Principle

6.1.3 SCOPE

The hazards assessment documents assigned classifications of Hazard Category 2 to Building 772-F, Hazard Category 3 to Building 772-1F and the B-25 waste container staging areas, and Radiological Facility to Building 772–4F (Ref. 6, 7, 8). The Hazards Assessment Document for the B-25 waste container staging areas was revisited for an updated radionuclide inventory (Ref. 30.). In accordance with the content guidance provided in DOE-STD-3009-94, Buildings 772-F and 772-1F are the only facilities in the F/H Lab that requires an evaluation relevant to the prevention of an inadvertent criticality (Ref. 5).

The frequency of a mitigated criticality accident is Beyond Extremely Unlikely (BEU) (i.e., incredible) for Buildings 772-F and 772-1F. For both buildings, criticality was found to be an incredible event using very conservative bounding assumptions and have been documented in Reference 31. This chapter addresses prevention of an inadvertent criticality for both Buildings 772-F and 772-1F because the extremely low frequency calculated for criticality at the F/H Lab is based primarily on the criticality controls, criticality prevention program, and criticality safety training, all of which prevent an inadvertent criticality.

As discussed in Reference 31 an inadvertent nuclear criticality at the B-25 waste container staging areas is also an incredible event due to the criticality controls, NCS prevention program, and criticality safety training, which are addressed in this chapter.

This chapter is not applicable to Building 772-4F because there are no significant nuclear criticality consequences associated with a facility classified as a Radiological Facility.

6.2 REQUIREMENTS

This section identifies the DOE Orders, standards, design codes, and regulations that are required for establishing the criticality safety basis of the facility. This section provides only the requirements specific to this chapter and pertinent to the safety analysis, not a comprehensive listing of all industrial standards, codes, and criteria.

6.2.1 APPLICABLE DEPARTMENT OF ENERGY ORDERS

DOE Order 420.1B (Ref. 9) applies to the F/H Lab in the performance of criticality safety analysis relevant to a nonreactor nuclear facility. The Order provides the basic elements for a NCS program to ensure that criticality safety is comprehensively addressed and receives an objective review. The Order requires that all identifiable risks shall be reduced to acceptable low levels and that management authorization of the operation shall be documented. This Order invokes the application of the basic elements and control parameters of the mandatory American Nuclear Society (ANS) criticality safety standards, the application of the double contingency principle, and the requirements for performing detailed NCS analysis for specific operations and for handling and transporting fissionable materials.

DOE Order 420.1B (Ref. 9) provides the requirements for the application of the mandatory nuclear safety and environmental protection, safety, and health standards applicable to all F/H Lab activities under all modes of operations.

6.2.2 APPLICABLE STANDARDS

The following standards apply to the F/H Lab in the performance of criticality safety analysis relevant to a nonreactor nuclear facility; these standards are required for establishing the safety basis of the F/H Lab:

- American National Standards Institute (ANSI)/ANS-8.1-1998 (Ref. 10) establishes the NCS practices and single/multiple parameter controls applicable to operations with fissionable materials outside reactors. These NCS practices are delineated in terms of administrative and technical controls, which include the double contingency principle.
- ANSI/ANS-8.3-1997 (Ref. 32) establishes the requirements for criticality accident alarm systems.
- ANSI/ANS-8.15-1981 (Ref. 11) establishes NCS controls and provides the physical characteristics and criticality aspects for special actinide elements used in operations outside reactors.
- ANSI/ANS-8.19-1996 (Ref. 12) establishes administrative practices for NCS involving operations with fissionable materials outside reactors.

6.2.3 APPLICABLE REGULATIONS

The following Code of Federal Regulations (CFRs) apply to the F/H Lab in the performance of criticality safety analysis relevant to a nonreactor nuclear facility; these federal codes are required for establishing the safety basis of the F/H Lab:

- 49 CFR 173.453 identifies packages exempt from fissile material classification and from the fissile material standards as delineated in the CFRs (Ref. 13). This section states that a package containing not more than 15 grams of fissile material (i.e., uranium or plutonium) is considered to be fissile exempt as long as 200 grams of non-fissile material per gram of fissile material are present in the container. It also specifies the maximum concentration and mass of fissile radionuclides in a shipping package.

6.3 CRITICALITY CONCERNS

6.3.1 LOCATIONS OF POTENTIAL CRITICALITY HAZARDS

Samples of fissile material are delivered to the F/H Lab sample receiving areas located in Buildings 772-F and 772-1F. From the main receiving area, the samples are distributed to the laboratories in Building 772-1F by way of the interconnecting utility corridors. Samples are distributed to Building 772-F by way of the interconnecting sample tunnel and passageway and then to the individual laboratory modules by way of similar interconnecting utility corridors. Fissile material containers are opened and diluted, as needed.

The quantity of fissionable material permitted within mass zones are based upon subcritical mass limits published in ANSI/ANS Standards 8.1 and 8.15. A mass zone may consist of a single lab module, a contiguous group of lab modules, or contiguous area with a collection of modules and corridors, where special limitations are imposed to protect against interactions through common dividing walls.

While in a mass zone, the materials are processed and as a result, the physical form of the material may change. In general, fissionable materials are present in small quantities and can be characterized as laboratory samples. However, on some occasions, larger quantities of fissionable material may be transferred from one mass zone to another. Several mass zones have been established to aid in monitoring the movement of, and the accounting for, fissionable material.

Fissile material in F/H Lab is designated to a mass zone (e.g., specific laboratory modules, corridors, receiving and shipping areas, and the sample preparation and transfer areas). Mass zones and areas within a mass zone that accept fissile material are occasionally changed.

Buildings 772-F and 772-1F have confinements for radioactive material which are radiobenches, radiohoods, gloveboxes, and shielded cells. Radioactive solutions from these confinements are typically discharged into the High Activity Drain (HAD) piping. Many parts of the HAD transfer system have been capped off. The material introduced into cup sinks (cup sinks are pipes in confinements connected to the HAD) drain by gravity into the HAD piping system and into Tank F. Tank F can hold 560 gallons and has an overflow drum that will collect overflow from Tank F.

All TRU waste generated at the F/H Lab is monitored during packaging and before shipping.

Waste is packaged according to levels of radioactivity and shipped for recovery or disposal in 55-gallon drums or Standard Waste Boxes. TRU waste from lab modules awaiting periodic shipment is temporarily placed in TRU Waste Container assay and holding areas (located in Rooms L-136A and L-136B in Building 772-F or in other approved locations).

B-25 and B-12 waste containers are stored outside the 772-1F building in a designated staging area. All waste generated at the F/H Lab intended to be removed via low level waste containers is monitored during packaging and before shipping. Radioactive waste is packaged according to

levels of radioactivity and shipped for disposal. Accountable quantities of fissile material are not routinely added to these waste containers; and, in fact, are very rarely added unless specifically authorized and intentionally added after technical review and management approval.

Both HAD Tanks C and D have been removed from service, contain as residue less than a single parameter subcritical mass of fissile material, and have been physically disconnected from new sources of fissile material.

Fissile material is not present in Building 772-4F.

6.3.2 FISSILE MATERIAL FORMS AND MAXIMUM QUANTITIES

Fissile material is any substance consisting of one or more fissile radionuclides. Fissile material at the F/H Lab can be in the form of solids (i.e., metals, oxides, and powders) and liquids (i.e., acid and organic solutions and mixtures). This definition of fissile material is consistent with the applicable ANSI/ANS standards. Fissile radionuclides and equivalency factors are documented in Reference 31 The maximum quantities of fissile material allowed in F/H Lab are 400 FGE ^{239}Pu each in mass zone and in the HAD Tank System.

No credit is taken for physical separation of Tanks C and D since overflow capability exists between Tank C and Tank D. Further, Tanks C and D are no longer operational and have been isolated from laboratory discharges by air gaps and blanked piping with a total combined conservative static inventory less than 400 FGE ^{239}Pu.

Assays performed to define the fissile material content in waste are defined as a process to identify specific values for fissile material. Examples include the following:

- Destructive assay (e.g., sample preparation using dissolution or dilution followed by wet chemical analysis);
- Nondestructive assay (e.g., the far field gamma waste assay station in L136);
- Screening for the presence/absence of fissile material based on knowledge of the potential source material (e.g., dose-to-curie and smear-to-curie measurements conducted at the item, bag, or box level); and
- Calculation of fissile content based upon attributes, source, and process knowledge data (e.g., engineering calculation).

Fissile material threshold is a FGE value below which the fissile mass in samples or waste containers is not required to be added to a criticality safety control posting and criticality safety controls are not required. The fissile inventory limit takes into account total fissile nuclear material above the fissile material threshold value allowed in each zone, which is the sum of those items above their respective threshold values, as well as the uncertainty associated with that inventory.

The F/H Lab NCS program does not take specific NCS-related credit for MC&A room limits or for the curie inventory control program. However, these controls are generally more

conservative than the NCS controls cited above, relative to ensuring that the exempt quantity provision is not used outside of its intended basis, which is a per-package type of exemption.

Fissile material above the accountable threshold are not routine components of waste placed in a B-25/B-12 waste container and are very rarely added unless specifically authorized or intentionally added, based upon technical review and management approval.

All information described above is demonstrated in Procedure L2-NMC-0001 of SRNS Procedure Manual L2-NMC (Ref. 14).

There are only trace amounts of actinides other than uranium and plutonium at the F/H Lab. Reference 31 documents equivalent conversions to ensure 400 FGE ^{239}Pu is maintained within the NCS program.

6.4 CRITICALITY CONTROLS

Facilities, in which, criticality is a concern can be divided into three general categories:

- Facilities that, because of the quantity of fissionable material(s) and the processes and operations involved require controls to prevent criticality accidents and reduce the probability of a criticality accident to a level judged acceptable, although still credible, in the DSA.
- Facilities that, because of the quantity of fissionable material(s) and the processes and operations involved require controls to prevent criticality accidents, but, by implementing such controls, reduce the probability of a criticality accident to a level judged incredible.
- Facilities in which, based on documented engineering judgment or comprehensive analysis, a criticality accident is determined to be incredible and controls are not required, but the as designed process conditions and assumptions upon which incredibility is based are maintained. Training, procedures, change control, and periodic assessments are all important in maintaining the as-required process conditions and assumptions.

Some facilities meet more than one category because of the diversity of operations taking place within the facility. If a criticality accident is inherently incredible based on the quantity of fissile material, form of the material, or the inherent physical or chemical nature of the process, then application of criticality safety controls is not required. However, for facilities having more than 450 grams of Pu-239 or 700 grams of U-235, a determination of inherent incredibility shall be documented. Reviews of facility or process changes evaluate the need for criticality safety requirements. For F/H Lab, the determination of credible –versus– incredible criticality scenarios are documented in Reference 31.

Inadvertent criticality in the F/H Lab is prevented by using criticality safety controls in design and operation. The three basic means of control are passive engineered controls, active engineered controls, and administrative controls. Passive engineered controls are preferred to active engineered controls, and active engineered controls are preferred to administrative controls.

The most important parameter used to prevent an inadvertent criticality in the F/H Lab is fissile mass. Administrative controls are the primary means used to ensure that the single-parameter subcritical limit on fissile mass is maintained. The F/H Lab has only one engineered control supporting the fissile mass control.

6.4.1 ENGINEERING CONTROLS

There are no engineering controls which provide active mitigation for criticality safety in F/H lab. Only one passive engineering control was identified for application in Buildings 772-F and 772-1F. The NCSE addresses the spacing provided by interior walls separating adjacent rooms when each room is authorized to contain a subcritical fissile mass (Ref. 31). The Design Feature provides assurance that accumulation of fissile material at 400 Pu-239 fissile gram equivalents within confinements in a back-to-back configuration is evaluated for criticality safety. The

passive Engineering control is applied to locations with confinements authorized to contain fissile mass greater than threshold quantities in adjacent mass zones under normal operations and abnormal events within confinements. The interior walls do not require qualification for fire, explosion, or earthquake events for criticality safety. A Design Basis Earthquake has been addressed with the knowledge that with the exception of the building, other systems including the gloveboxes, are not qualified to withstand DBE. Any natural phenomenon that is violent enough to knock down walls would be very unlikely to consolidate fissile material; it would likely mix the fissile material with non-fissile material instead, which would increase the required critical mass in most cases(Ref. 31). Explosions which breech confinement would have a similar result. Fire suppression is addressed as dispersing and diluting the material (Ref. 31). The designation of mass zones is controlled through facility procedures which are subject to the Unreviewed Safety Question process. Modifications to the facility are managed under Manual E7 which requires the Unreviewed Safety Question process for facility changes.

6.4.2 APPLICATION OF DOUBLE CONTINGENCY PRINCIPLE

Mass is the parameter controlled in F/H Lab for criticality, although in many cases other parameters such as interaction, reflection, and concentration at their normal values provide a significant margin from the critical state.

DOE O 420.1B, (Ref. 9) requires credible scenarios that have controls on a single parameter be approved by DOE. F/H Lab primarily controls mass and there no credible scenarios are identified. DOE-STD-3007-2007 (Ref. 20) states, “If a criticality accident is not credible then the risk of a criticality accident is lower than that provided by the application of the Double-Contingency Principle even if only one parameter is controlled. Therefore in cases where a mitigated (i.e., crediting controls and/or elements of incredibility that prevent the accident) criticality accident is not credible, DOE Order 420.1B does not require DOE approval.” Thus DOE approval is not required for any F/H Laboratory criticality accident scenario.

Application of the Double Contingency Principle at F/H Lab is documented in Reference 31 prepared in compliance with the SRNS Nuclear Criticality Safety Manual, SCD-3 (Ref. 2). Additionally, SCD-3 requires double contingency discussion in each new Nuclear Criticality Safety Evaluation or Nuclear Criticality Safety Assessment prepared for the F/H Lab including an evaluation of the double contingency aspects of all process, system, or equipment changes. Thus, the double contingency status of the F/H Lab is to be maintained up-to-date in safety documents.

The primary purpose of Reference 31 is to evaluate the credibility of a criticality accident for F/H Lab activities. If an activity is found to have a credible risk of a criticality accident, then F/H Lab compliance with the Double Contingency Principle will be documented. If a criticality accident is found to be not credible for an activity, then the basis will be documented and any required elements to maintain the risk of a criticality accident as not credible will be listed in Reference 31 The guidelines used to differentiate between credible and not credible criticality accident scenarios are also described in Reference 31.

To facilitate the evaluation of potential criticality activities within F/H Lab, Reference 31 identifies contingencies for the fissionable material operations performed within F/H Lab facilities. Contingencies in the form of unplanned initiating events that could potentially lead to a criticality accident were investigated.

Reference 31 evaluates fissionable material operations conducted at F/H Area Laboratory. It is concluded that there are no credible criticality accident scenarios for these operations; with the roll up of all scenarios that a criticality accident is not credible for the Laboratory, thus Nuclear Incident Monitors (NIMs) are not required. Reference 31 concludes that criticality in the F/H Area Laboratory is not credible provided the requirements within the evaluation are met. The evaluation also concludes that no single credible event or failure can result in a criticality accident. The parameter controlled in F/H Lab is mass.

6.5 CRITICALITY SAFETY PROGRAM

This section presents an overview of the organizational structure, committees, responsibilities, interfaces, and technical and administrative practices of the criticality prevention policies and programs. This section also identifies the administrative plans and procedures that implement the criticality safety program.

6.5.1 CRITICALITY SAFETY ORGANIZATION

The SRNS President establishes the company-wide policies for implementing the criticality safety requirements of the DOE and for informing all SRNS employees involved in the operations with fissile material. The SRNS President derives authority from the DOE, but delegates the authority and assigns the responsibilities for daily criticality safety operations to lower-level management in the various divisions. Overall responsibility for the criticality safety of operations at all SRS facilities, where fissile material is present, resides with the SRNS President.

The organization responsible for ensuring criticality safety at the F/H Lab consists of division managers and key individuals within, as well as outside, the F/H Lab. The division managers derive their authority from the SRNS President and ensure that criticality safety programs and policies, established by senior management, are followed in each area in the division. The division managers delegate criticality safety responsibilities to lower-level managers within the division but maintain overall accountability for such responsibilities at the division manager level. From the standpoint of criticality safety, the F/H Lab Facility Manager interacts with the Nuclear Materials Management and Nuclear & Criticality Safety Engineering (N&CSE). From the standpoint of organizational reporting, the F/H Lab Facility Manager reports to the Analytical Laboratories Department (ALD) Director. The ALD Director reports to the Nuclear Materials Operations Vice President.

The SRNS management organization is discussed in Chapter 17. The F/H Lab TSR document provides the minimum staffing levels needed to maintain safe facility operation (TSR Section 5.2). The TSR does not include staffing required for the analytical mission because this varies based upon site-wide analytical needs. The TSR also establishes the administrative controls for staff qualifications and training (TSR Section 5.3). Staffing and qualifications are also addressed in Section 17.3.3 of Chapter 17 of this DSA.

6.5.1.1 F/H Lab Facility Manager Authority and Responsibility

The F/H Lab Facility Manager derives authority from the Analytical Laboratory Section Manager and performs, as a minimum, the following duties:

- Accepts responsibility for the daily criticality safety of the F/H Lab, including criticality safety self-assessments, and complies with the SRNS policy for NCS stated in Manual 1-01 and implemented by SCD-3 (Ref. 1, 2)

- Training of facility personnel in nuclear criticality safety
- Assigns individuals trained in NCS to maintain inventory reports and accountability records of all fissile material received, handled, and shipped from the F/H Lab and to ensure independent checks of these activities
- Control of operations to comply with established NCS Program requirements and to protect elements of incredibility
- Implementation of the Double Contingency Principal, as required

6.5.1.2 Nuclear Material Custodians

Nuclear Material Custodians (e.g., nuclear material handlers/accountable material handlers) are the individuals responsible for the accounting and control of nuclear material assigned to them. Nuclear materials at F/H Lab include fissile isotopes in MC&A accountable quantities but below the significant quantity threshold for "fissile material handlers" (the DOE-approved Training Implementation Matrix documents that F/H Lab does not have "fissile material handlers") (Ref. 19). The nuclear material custodians report to the MBA custodian, who in turn reports to the Facility Manager. The responsibilities of the nuclear material custodians include, but are not limited to, the following:

- Be trained in criticality safety commensurate with their duties, which typically consist of facility-specific training in addition to general criticality safety training
- Be responsible for criticality safety of their own actions and the operating systems under their control
- Be familiar with, and follow, criticality safety procedures as written, and adhere to all NCS steps in operating procedures related to their assignment, as applicable
- Stop performing a procedure if it does not correspond to the operating system upon which it is being performed or if an unforeseen condition develops, and notify supervision
- Be responsible for sampling selected items and reconciling any items that are outside established limits during inventory verification/confirmation measurements

6.5.1.3 Cognizant Technical Function

A CTF is a functional assignment by management of authority and responsibility to a subject matter expert for specific equipment, instrumentation, measurement methods, systems, and/or technical/administrative programs. The criticality safety CTF is the subject matter expert regarding criticality safety at the F/H Lab. As a minimum, the criticality CTF serves as the contact person for criticality safety, reviews procedures for criticality safety impact, provides evaluations as needed, and contacts the N&CSE to perform analyses as needed.

The MBA Custodian maintains complete and current records of fissile material quantities and locations in F/H Lab, which are independent of records maintained by the individual nuclear material handlers.

The N&CSE staff prepares NCSEs and obtains required internal reviews. The N&CSE staff maintains familiarity with current developments in NCS standards, guides, and related codes. The N&CSE initiates formal criticality safety documentation of recommended limits and provides technical assistance in equipment and process design. The N&CSE staff also participates on the division/area Criticality Safety Committee (CSC) for the purpose of examining criticality safety practices and examining compliance with procedures.

6.5.1.4 Criticality Safety Committees

The criticality prevention program is controlled as determined by the SRNS site-level programs, which are part of the independent review and appraisal system. Nuclear Criticality Safety Review Committee (NCSRC) reports to the N&CSE Manager. The NCSRC is the highest level site criticality safety committee and is responsible for fostering criticality safety across the site and serving as an arbiter in resolving criticality safety technical and policy issues. The NCSRC responsibilities are addressed in its charter contained in Manual 1-01. See SCD-3 (Ref. 2) for additional information on NCSRC scope and activities

6.5.1.5 Administrative Plans and Procedures

SCD-3 (Ref. 2) defines and establishes a company-wide NCS program that is consistent with applicable DOE requirements, industry standards, company safety policies, and accepted laboratory safety practices. Detailed procedures delineating requirements for the following are contained in approved and controlled laboratory manuals (Ref. 14, 15, 18,):

- Nuclear material receipt and shipment
- Inventory control
- Laboratory analyses
- Sample disposal and recovery
- Interfacing requirements

6.5.2 CRITICALITY SAFETY PLANS AND PROCEDURES

6.5.2.1 Document Control

Documentation at the F/H Lab is controlled in accordance with site-level policies and procedures as described in Chapter 14 of the SRS DSA Support Document (Ref. 21). Chapter 14 provides information for the control of documentation involving activities such as design changes, temporary modifications, interfaces, and design records.

NCS-related procedures are technically reviewed and approved in accordance with Procedure Manuals 2S, SCD-3, and Analytical Laboratory Manual (Ref. 22, 2, 15). The F/H Lab design authority, through technical reviews and the USQ process, ensures compliance with authorization baseline requirements.

6.5.2.2 Material and Operational Controls

F/H Lab laboratory manuals contain approved procedures delineating material and operational controls (Ref. 14, 15, 18).

6.5.2.3 Posting of Nuclear Criticality Safety Limits

F/H Lab follows the criticality controls program for sitewide criticality safety posting and labeling requirements as discussed in the SRS Nuclear Criticality Safety Manual SCD-3 (Ref. 2).

This section summarizes the facility-specific requirements for posting and labeling of NCS limits. The NCS limits and appropriate controls are prominently displayed in the F/H Lab on official postings at the entrances to each laboratory module, area, or zone where fissile materials are accumulated, consistent with the implementation of NCS controls in the facility. For rooms, areas, or zones that typically receive material directly from Sample Receiving, the postings may be located at this entrance point to ensure compliance before physical receipt.

NCS postings are provided on SRS-approved signs with associated fissile material symbols (e.g., trefoil insignia; magenta or purple on a yellow background) in accordance with SCD-3 (Ref. 2).

6.5.2.4 Review of Operations for Criticality Safety

Review of facility operations for criticality safety is addressed by periodic audits and surveillances such as those delineated in approved site-level manuals, in approved SRNS Procedure Manual L2-1, and in the conduct of operations described in Chapter 11 of this DSA (Ref. 2, 15, 16, 17).

6.5.2.5 Emergency Evacuation

An emergency or unusual event is defined as an event that involves an actual or imminent substantial reduction of the functionality or operability of facility safety systems that may result in radioactive releases greater than regulatory guidelines. Possible emergency events at the F/H Lab include, but are not limited to, the following:

- Fires
- Radioactive contamination

- Environmental spills
- Radioactive releases
- Criticality events

The F/H Lab is exempted from having a Nuclear Incident Monitor (NIM) system as provided in ANSI/ANS-8.3-1997 because mass zone fissile material inventories are less than the limits prescribed in ANSI/ANS-8.1-1998 (Ref. 10, 23). Criticality accident analyses documented in Reference 31 determined that nuclear criticality events are incredible. Thus, a nuclear criticality incident originating in the F/H Lab is not considered to be a potential emergency scenario. A NIM system, therefore, is not required or installed in any of the F/H Lab facilities (Ref. 31). However, since the F/H Lab is part of the overall F-Area criticality safety program, a criticality incident originating outside the F/H Lab but within F-Area, may require the evacuation of F/H Lab personnel. Notification to initiate emergency evacuation, due to a criticality incident in an adjacent facility, is delivered via the F/H Lab and F-Area public address system or other means.

6.5.2.6 Impact of Fire Protection on Criticality Safety

The F/H Lab uses and relies upon the single-parameter, limit of 400 grams of fissile material for NCS, which is conservative with respect to ANSI/ANS-8.1-1998 recognized values (Ref. 10). Operating limits for any given room or zone in the F/H Lab or in the HAD Transfers System are bounded by this limit. No other criticality safety controls (e.g., requirements on geometry, moderation, and reflection) are required. With respect to criticality safety, no restrictions are required on the use of water as a fire suppression medium in the F/H Lab. With the exception of certain locations described in Section 2.7.8.2 of this DSA, most rooms and areas in Buildings 772-F, 772-1F, and 772-4F are protected by automatic sprinkler systems.

6.5.3 CRITICALITY SAFETY TRAINING

The two types of criticality safety training, discussed herein, are sitewide and facility-specific training. The requirements for these two types of training are dependent upon the employee's duties.

6.5.3.1 Sitewide Criticality Safety Training

SCD-3 defines the scope of the sitewide criticality safety training (Ref. 2). The N&CSE organization at SRS is charged with developing criticality safety training programs consistent with DOE Order 5480.20A (Ref. 24) and ANSI/ANS-8.20 for facility operating personnel. This criticality training is required for facility operators, supervisors, engineers providing technical or process support, and all other personnel whose job assignment requires them to be in an area where controls are instituted to ensure criticality safety. The F/H Lab follows the requirements for criticality safety training described in Reference 2.

6.5.3.2 Facility-Specific Criticality Safety Training

All personnel assigned to the F/H Lab and all individuals specifically responsible for the accounting and handling of fissile material receive facility-specific criticality safety training. On a graded approach, F/H Lab designates personnel who handle fissile material as Nuclear Material Handlers and provide them with the proper criticality safety training.

The F/H Lab-specific criticality safety training program considers the nature of a person's assignment. The training program is designed to group individuals, based upon training requirements, to ensure that required information is provided while avoiding the presentation (and testing) of excessive information not applicable to the individual's assignments and responsibilities.

Facility-specific operational criticality safety training is required for all nuclear material handlers and includes periodic reexamination/requalification. If a nuclear material handler's qualification has expired, handling of accountable quantities of nuclear materials or performing any controls associated with sample receiving or disposal of fissile materials (including TRU waste) by that handler is not allowed until he or she is requalified. The training program is reviewed by the F/H Lab CTF for criticality/nuclear material oversight. F/H Lab does not have criticality safety engineers or specialists, as these personnel are located in the SRNS N&CSE organization and are not specifically designated to an individual facility. Training program records and retention are maintained per Manuals 4B and 1Q (Ref. 25, 26).

6.5.4 DETERMINATION OF OPERATIONAL NUCLEAR CRITICALITY LIMITS

This section summarizes the analytical approach used to derive operational nuclear criticality limits, including the error contingency criteria or margin of error (uncertainty), the use of contingency analyses, and the basic justification of the appropriateness of such an approach.

The authorization basis imposed for the F/H Lab is the single-parameter mass limit of 450 FGE ^{239}Pu.

- Facility operation are conservative with respect to ANSI/ANS-8.1-1998 (Ref. 10) recognized single-parameter subcritical masses of 700 grams of U-235, 500 grams of U-233, and 450 grams of all plutonium isotopes.
- Limits that are conservative with respect to ANSI/ANS-recognized values do not require specific evaluation because these standards are internationally recognized and are also recognized by DOE Order 420.1B (Ref. 9) as mandatory standards, where applicable.

F/H Lab follows the analytical approach for determining operational nuclear criticality limits as discussed in the SRS Nuclear Criticality Safety Manual SCD-3 (Ref. 2) and as summarized in the Reference 31.

6.5.5 CRITICALITY SAFETY ASSESSMENTS/AUDITS

This section briefly summarizes the criticality safety assessment and inventory audit programs, which verify that the F/H Lab is in compliance with established procedures used for preventing an inadvertent criticality.

F/H Lab follows the program for criticality safety self-assessments and reviews as discussed in the SRS Nuclear Criticality Safety Manual SCD-3 (Ref. 2). F/H Lab charters the independent committee, described in section 6.5.1, to assist in the self-assessments process and performs regular reviews.

Periodic physical inventories are conducted in accordance with facility-specific procedural controls contained in SRNS Procedure Manuals L2-1 (Ref. 14). These inventories verify the effectiveness of NCS controls at the F/H Lab. Any discrepancies and inventory differences are investigated, reported as appropriate, and reconciled according to procedures.

6.5.6 CRITICALITY INFRACTION REPORTING AND FOLLOWUP

F/H Lab follows the program for criticality infraction reporting and followup as discussed in the SRS Nuclear Criticality Safety Manual SCD-3 (Ref. 2).

This section provides a brief summary of the criticality infraction program for the reporting and follow-up of criticality infractions.

6.5.6.1 Classification, Investigation, and Reporting

Reporting of criticality violations is consistent with applicable DOE Orders and ensures that other operations may benefit from lessons learned. Violations of limits or controls (or related concerns) required by approved F/H Lab procedures, or incorporated by reference to approved procedures, are promptly reported to the F/H Lab Shift Operations Manager (SOM)/Facility Emergency Coordinator (FEC), who ensures that all further notifications are consistent with the SRNS Manual 9B implementation of the Site Item Reportability and Issue Management program (and any facility-imposed internal notification requirements) (Ref. 27).

If violations of Criticality Safety Limits, criticality safety steps in procedures, or criticality safety procedures were to occur, they would be classified in accordance with Manual 9B, which implements DOE Manual 231.1-2 (Ref. 27, 28).

Personnel handling fissile material must report suspected and possible limit violations and indeterminate conditions in addition to confirming violations of limits. Suspected and indeterminate conditions are assumed to be real occurrences for which immediate actions are implemented and which conservatively consider all scenarios associated with the situation.

Loss or suspected potential theft of nuclear material would be reported to the F/H Lab SOM/FEC. Appropriate further reporting would be accomplished by the SOM/FEC, F/H Lab Facility Manager, DOE Facility Representative, etc., based upon the classification assignment in

Manual 9B and DOE Manual 231.1-2 (Ref. 27, 28). Consideration would be given to the safety impact to the facility and to the environment, in addition to facility controls and accountability considerations, when assessing immediate and subsequent actions.

6.5.6.2 Actions for Criticality Infraction

The following actions for limit violations are immediately implemented at the F/H Lab:

- The limit violation is reported to the SOM (or designee). This reporting ensures that events, issues, and concerns arising from nuclear/fissile material control or handling at the F/H Lab receive appropriate immediate actions and are properly evaluated relative to reporting requirements and that a timely and complete report is prepared.
- If the NCSE limit is violated (including a suspected violation or indeterminate condition), the movement of fissile material above threshold quantities is suspended.

6.5.6.3 Recovery from a Criticality Infraction

The following activities and precautions are implemented when recovering from a criticality infraction:

- Recovery from a criticality infraction is accomplished in a manner to ensure that the remaining safety margin is acceptable or is not further reduced if already unacceptable.
- Safe shutdown of operations and recovery from a limit violation are conducted in accordance with approved procedures consistent with existing requirements to conduct all operations in accordance with written instructions.
- Procedures for recovery from a criticality infraction assign specific responsibilities for required actions to be implemented during recovery, including the role of the SOM/FEC.
- At least one experienced criticality safety engineer/officer shall serve as an advisor for the recovery of each criticality infraction.

6.5.6.4 Corrective Action

Events, issues, and concerns related to fissile material control are reviewed by the division and site Safety Review Committees, CSC, the site NCSRC, and other groups, such as the Facility Operations Safety Committee, to evaluate results and lessons learned. Following recovery from a criticality infraction, a permanent corrective action would be developed and implemented to reduce the probability of a violation recurrence (e.g., prepare better procedure, improve training, revise conduct of operations, revise F/H Lab management programs). Lessons learned are incorporated into the facility's training program and nuclear safety analysis, as appropriate.

6.6 CRITICALITY INSTRUMENTATION

SCD-3 describes requirements for providing NIMs (Ref. 2). NIMs are not required in the F/H Lab for the following reasons:

- The quantities of other fissionable materials present in the F/H Lab do not exceed the safe mass limits specified in ANSI/ANS-8.15-1981 (Ref. 11).
- Light water is the most efficient moderator commonly found in small quantities in the laboratory facilities. The use of moderators or reflectors that are more efficient than light water is not required in the F/H Lab for routine laboratory operations. (Heavy Water is not permitted in any laboratory modules authorized for fissile material.)
- Criticality accident analyses discussed in Reference 31 have determined that nuclear criticality events, due to exceeding TSR/NCS limits in any given room or zone in the F/H Lab or in the HAD Transfer Tank System, are beyond extremely unlikely (i.e., less than 1E-06 per year).

Continuous monitoring of ventilation systems specifically for NCS purposes is not required because periodic physical inventories prevent significant undetected loss and because periodic monitoring of ventilation systems in compliance with Manual 5Q is satisfactory (Ref. 29).

6.7 REFERENCES

1. Management Policies. Manual -1-01, Savannah River Nuclear Solutions, Aiken, SC.

2. Nuclear Criticality Safety Manual. SCD-3, Savannah River Nuclear Solutions, Aiken, SC.

3. Standards/Requirements Identification Document. SRNS-RP-2008-00086-M&O, Savannah River Nuclear Solutions, Aiken, SC.

4. Nuclear Safety Management. Title 10 Energy, Code of Federal Regulations Part 830, U.S. Department of Energy, Washington, DC,.

5. Preparation Guide for U.S. Department of Energy Nonreactor Nuclear Facility Safety Analysis Reports. DOE-STD-3009-94, CN3, U.S. Department of Energy, Washington, DC, March 2006.

6. Buildings 772-F and 772-4F of the Central Laboratory Facility. WSRC-TR-94-0114, Hazards Assessment Document DOE-STD-1027-92 Review, Westinghouse Savannah River Company, Aiken, SC, June 1994.

7. Central Laboratory Facility Building 772-1F. WSRC-TR-94-0115, Hazards Assessment Document DOE-STD-1027-92 Review, Westinghouse Savannah River Company, Aiken, SC, June 1994.

8. Hazards Assessment Document -- Central Laboratory Facility, B-25 Waste Container Staging Areas. S-HAD-F-00004, Rev. 0, Westinghouse Savannah River Company, Aiken, SC, November 1995.

9. Facility Safety. DOE Order 420.1B, U.S. Department of Energy, Washington, DC, December 2005.

10. American National Standards, Nuclear Criticality Safety in Operations with Fissionable Materials Outside Reactors. ANSI/ANS-8.1-1998, American Nuclear Society, La Grange Park, IL, 1998.

11. American National Standards, Nuclear Criticality Control of Special Actinide Elements. ANSI/ANS-8.15-1981, American Nuclear Society, La Grange Park, IL, 1981.

12. American National Standards, Administrative Practices for Nuclear Criticality Safety. ANSI/ANS-8.19-1996, American Nuclear Society, La Grange Park, IL, 1996.

13. Fissile Material - Exceptions. Code of Federal Regulations, 49 CFR, Part 173.453, U.S. Government Printing Office, Washington, DC.

14. Analytical Laboratories Multi-Group Procedures. Procedure Manual L2-NMC, Savannah River Nuclear Solutions, Aiken, SC.

15. Analytical Laboratories Standard Practices. Manual L2, Savannah River Nuclear Solutions, Aiken, SC.

16. Material Control and Accountability Manual. Manual 14Q, Savannah River Nuclear Solutions, Aiken, SC.

17. Material Control and Accountability Section Manual. Manual 14Q1, Savannah River Nuclear Solutions, SC.

18. Process Control Laboratory Procedures. Manual L3.08, Savannah River Nuclear Solutions, Aiken, SC.

19. Savannah River Technology Center Analytical Laboratories Training Implementation Matrix Plan. WSRC-RP-92-226, Rev. 3, Westinghouse Savannah River Company, Aiken, SC, January 1998.

20. Guidelines for Preparing Criticality Safety Evaluations at Department of Energy Non-Reactor Nuclear Facilities, DOE-STD-3007-2007, February 2007

21. Savannah River Site DSA Support Document – Site Characteristics and Program Descriptions. "Quality Assurance," Chapter 14, Rev. 1, WSRC-IM-2004-00008, Washington Savannah River Company, Aiken, SC, June 2007.

22. Conduct of Operations Manual. Manual 2S, Savannah River Nuclear Solutions, Aiken, SC.

23. American National Standards, Criticality Accident Alarm System. ANSI/ANS-8.3-1997, American Nuclear Society, La Grange Park, IL, 1997.

24. Personnel Selection, Qualification, Training, and Staffing Requirements at DOE Nuclear Facilities. DOE Order 5480.20A, U.S. Department of Energy, Washington, DC, November 1994.

25. Training and Qualification Program Manual. Manual 4B, Savannah River Nuclear Solutions, Aiken, SC.

26. Quality Assurance Manual. Manual 1Q, Savannah River Nuclear Solutions, Aiken, SC.

27. Site Item Reportability and Issue Management (SIRIM). Manual 9B, Savannah River Nuclear Solutions, Aiken, SC.

28. Occurrence Reporting and Processing of Operations Information. DOE Manual 231.1-2, U.S. Department of Energy, Washington, DC, August 2003.

29. Radiological Controls. Manual 5Q, Savannah River Nuclear Solutions, Aiken, SC.

30. Beck, R.S. B-25 Accident Analysis Material At Risk, S-CLC-F-00603, Rev. 1, Washington Safety Management Solutions, Aiken, SC, July 2007.

31. Nuclear Criticality Safety Evaluation: F/H Area Laboratory. N-NCS-F-00126, Rev. 2, Savannah River Nuclear Solutions, Aiken, SC

32. Criticality Accident Alarm System. ANSI/ANS-8.3-1997, American Nuclear Society, La Grange Park, IL.

CENTRAL LABORATORY FACILITY -
BUILDINGS 772-F, 772-1F, AND 772-4F
SAFETY ANALYSIS REPORT

CHAPTER 7

RADIOLOGICAL PROTECTION

April 2010

Savannah River
Nuclear Solutions, LLC
A Fluor Daniel Partnership

DISCLAIMER

This document was prepared by Savannah River Nuclear Solutions LLC (SRNS), under contract with the United States Department of Energy (DOE).

Release to and Use by Third Parties. As it pertains to releases of this document to third parties, and the use of or reference to this document by such third parties in whole or in part, neither SRNS, DOE, nor their respective officers, directors, employees, agents, consultants or personal services contractors (i) make any warranty, expressed or implied, (ii) assume any legal liability or responsibility for the accuracy, completeness, or usefulness, of any information, apparatus, product or process disclosed herein or (iii) represent that use of the same will not infringe privately owned rights. Reference herein to any specific commercial product, process, or service by trademark, name, manufacture or otherwise, does not necessarily constitute or imply endorsement, recommendation, or favoring of the same by SRNS, DOE or their respective officers, directors, employees, agents, consultants or personal services contractors. The views and opinions of the authors expressed herein do not necessarily state or reflect those of the United States Government or any agency thereof.

CONTENTS

Page

7.0 RADIOLOGICAL PROTECTION 7.1-1

.1 INTRODUCTION 7.1-1

7.1.1 Objective 7.1-1

7.1.2 Scope 7.1-1

7.2 REQUIREMENTS 7.2-1

7.3 RADIOLOGICAL PROTECTION PROGRAM AND ORGANIZATION 7.3-1

7.3.1 Radiological Protection Program 7.3-1

7.3.1.1 Tool Control 7.3-1

7.3.2 Radiological Protection Organization 7.4-1

7.4 AS LOW AS REASONABLY ACHIEVABLE POLICY AND PROGRAM 7.4-1

7.4.1 As Low As Reasonably Achievable Policy Considerations 7.4-1

7.4.2 Associated Radiological Goals 7.4-1

7.4.3 Personnel Protective Practices And Techniques 7.4-1

7.5 RADIOLOGICAL PROTECTION TRAINING 7.5-1

7.6 RADIATION EXPOSURE CONTROL 7.6-1

7.6.1 Administrative Limits 7.6-1

7.6.2 Radiological Practices 7.6-1

7.6.3 Dosimetry 7.6-2

7.6.4 Respiratory Protection 7.6-3

7.7 RADIOLOGICAL MONITORING 7.7-1

7.7.1 Radiological Monitoring And Surveys 7.7-1

7.7.1.1 General Requirements 7.7-1

7.7.1.2 Radiation Surveys 7.7-1

7.7.1.3 Contamination Surveys 7.7-1

7.7.1.4 Area Radiation Monitors 7.7-2

7.7.1.5 Airborne Radioactivity Monitoring 7.7-2

7.7.2 Radiological environmental Monitoring 7.7-2

7.7.3 Associated Records/Reports 7.7-3

7.7.4 Meteorological Data Collection/Evaluation 7.7-3

7.8 RADIOLOGICAL PROTECTION INSTRUMENTATION 7.8-1

7.8.1 Criteria For Selection Of Equipment And Instrumentation 7.8-1

7.8.2 Control Of The Calibration Process 7.8-1

7.8.3 Quality Assurance For Calibration And Maintenance 7.8-1

7.8.4 Types Of Detectors And Monitors 7.8-2

7.8.4.1 Airborne Radioactive Particulate and Liquid Effluent Monitoring 7.8-2

7.8.4.2 Solid Waste Monitoring 7.8-2

7.8.4.3 Radiation and Contamination Monitors 7.8-2

7.8.5 Contamination Control Equipment and Facilities 7.8-5

7.9 RADIOLOGICAL PROTECTION RECORDKEEPING 7.9-1

7.10 OCCUPATIONAL RADIATION EXPOSURE 7.10-1

7.11 REFERENCES 7.11-1

ACRONYMS AND ABBREVIATIONS

ALARA	As Low As Reasonably Achievable
CFR	Code of Federal Regulations
CND	Criticality Neutron Dosimeter
CRM	Count Rate Meter
DOE	Department of Energy
DSA	Documented Safety Analysis
EPD	Electronic Personal Dosimeter
FARMS	Facility Annual Review of Monitoring Systems
F/H Lab	F/H Area Laboratory
mrem	millirem
PCM	Personnel Contamination Monitor
RBA	Radiological Buffer Area
RCO	Radiological Control Operations
RWP	Radiological Work Permit
ESH&Q	Environmental, Safety, Health and Quality
SAR	Safety Analysis Report
SRNS	Savannah River Nuclear Solutions
SRS	Savannah River Site
TLD	Thermoluminescent Dosimeter
WSRC	Washington Savannah River Company

7.0 RADIOLOGICAL PROTECTION

7.1 INTRODUCTION

7.1.1 OBJECTIVE

The purpose of this chapter is to provide information on the Savannah River Site (SRS) Radiological Protection Program for F/H Area Laboratory (F/H Lab) that satisfies the requirements of Title 10 Code of Federal Regulations (CFR) Part 830 Nuclear Safety Management (Ref. 1).

7.1.2 SCOPE

This chapter provides information on the radiological protection program for the worker and the public as it applies to Buildings 772-F, 772-1F, and 772-4F of the F/H Lab. Information specific to the F/H Lab that is not discussed in the Savannah River Site (SRS) Documented Safety Analysis (DSA) Support Document is detailed in this chapter (Ref. 3). The scope of this chapter includes the following:

- Description of the radiological protection organization
- Descriptions of the policies and programs for reducing radiation exposures to values that are As Low As Reasonably Achievable (ALARA)
- Description of radiation exposure control, including administrative limits, radiological practices, dosimetry, and respiratory protection
- Identification of the radiological monitoring program for protecting workers, the public, and the environment
- Discussion of radiological protection instrumentation
- Description of the program for maintaining records of radiation sources, releases, and occupational exposures

Aspects found in this SAR that are not relevant to, or that are different from, the SRS DSA Support Document, due to the application of a graded approach, are noted.

7.2 REQUIREMENTS

The F/H Lab, as part of the Savannah River Site (SRS), is required to comply with the Standards/Requirements Identification Document (S/RID) which states the codes, standards, and regulations governing the policies and program elements of the SRS Radiological Protection Program (e.g., S/RID Functional Area 11). Section 7.2 of the SRS DSA Support Document discusses these requirements (Ref. 3).

7.3 RADIOLOGICAL PROTECTION PROGRAM AND ORGANIZATION

7.3.1 RADIOLOGICAL PROTECTION PROGRAM

The Environmental, Safety, Health and Quality (ESH&Q) Department establishes the radiological protection program for the F/H Lab. Chapter 7 of the SRS DSA Support Document discusses the ESH&Q organization, program objectives, and experience/qualification requirements (Ref. 3).

The ESH&Q program at the F/H Lab typically consists of several full-time individuals during full facility operations. The staffing level of ESH&Q is commensurate with the anticipated routine work demands and can vary over time and with the evolving mission at the F/H Lab.

7.3.1.1 Tool Control

Contamination controls for tools ensure that contaminated tools are not used in non-radiological areas. Tool control is implemented via the requirements of Savannah River Nuclear Solutions (SRNS) Manuals 5Q, Radiological Control, and 1Y, Conduct of Maintenance (Ref. 5, 18).

7.3.2 RADIOLOGICAL PROTECTION ORGANIZATION

The ESH&Q Department is the SRS consulting authority for radiological protection of site personnel and the public. Section 7.3 of the SRS DSA Support Document discusses the organizational structure of ESH&Q (Ref. 3).

The ESH&Q staff assigned at the F/H Lab is part of an operational support organization interacting daily with the F/H Lab Facility Manager. The F/H Lab Facility Manager and his staff are responsible for ensuring that all personnel working in the F/H Lab are adequately protected against any existing radiological hazards in the facility in accordance with Manual 5Q (Ref. 5).

The F/H Lab ALARA Program Coordinator has the following responsibilities:

- Ensuring that personnel are adequately protected against radiological hazards encountered in the performance of their jobs
- Informing management and personnel of changing radiological practices and procedures
- Implementing these changes in the F/H Lab to preclude or minimize any adverse impact on personnel safety or laboratory activities

7.4 AS LOW AS REASONABLY ACHIEVABLE POLICY AND PROGRAM

7.4.1 AS LOW AS REASONABLY ACHIEVABLE POLICY CONSIDERATIONS

The F/H Lab follows the SRS ALARA policy as described in Chapter 7 of the SRS DSA Support Document and the SRS ALARA Manual (Ref. 3, 6).

7.4.2 ASSOCIATED RADIOLOGICAL GOALS

Chapter 7 of the SRS DSA Support Document details SRS plans (applicable to the F/H Lab) on the establishment of radiation exposure goals and the documentation of goal performance (Ref. 3).

The F/H Lab ALARA Coordinator compiles calendar-year departmental goals and initiatives prepared by each service group conducting work within radiological areas for inclusion in the radiological improvement plan (Ref. 6).

F/H Lab personnel review ALARA goals and trends in accordance with SRNS ALARA Manual with the purpose of rescheduling or reconfiguring work as necessary to achieve ALARA goals or to revise those goals (Ref. 6). Typical goals that are documented and trended at the F/H Lab include the following:

- Cumulative whole-body radiation exposure
- Maximum department individual exposure
- Number of intakes above administrative limits
- Number of personnel contamination cases
- Reduction in overall radiological hazard
- Number of incidents within radiological areas

7.4.3 PERSONNEL PROTECTIVE PRACTICES AND TECHNIQUES

The F/H Lab implements the personnel protective practices and techniques discussed in Chapter 7 of the SRS DSA Support Document (Ref. 3). Every employee at the F/H Lab plays an active role in maintaining exposures to radiation and radioactive materials ALARA. Self-monitoring activities are an integral part of reducing radiation exposures.

At the present time, the F/H Lab allows its Advanced Radiological Worker Trained laboratory technicians to self-monitor their work area prior to and during their job performance. The surveys conducted by these technicians are intended to assist the F/H Lab in controlling contamination at its source and in preventing the spread of contamination throughout the laboratories. These surveys are not official surveys of record (RCO conducts these). If a

technician detects transferable contamination greater than the allowable limits, RCO must be notified for decontamination instructions.

7.5 RADIOLOGICAL PROTECTION TRAINING

The F/H Lab follows the site program for training and frequency of training. Section 7.5 of the SRS DSA Support Document discusses radiological protective training in the following areas (Ref. 3):

- General Employee Radiological Training
- Radiological Worker Training
- Radiological Control Inspector Training
- Supervisor and Manager Training

During their initial training, laboratory technicians are shown how to do the following:

- Read and use the instruments
- Survey the laboratory modules, equipment, and samples that they will be using in their jobs
- Control contamination at its source through good work practices

Additional requirements for the initial qualification of F/H Lab personnel are given in Section 17.3.3.2. The development of the training program is described in Chapter 12.

7.6 RADIATION EXPOSURE CONTROL

7.6.1 ADMINISTRATIVE LIMITS

The F/H Lab follows the SRS administrative control limits as described in Manual 5Q (Ref. 5). The SRS administrative limits program is detailed in Chapter 7 of the SRS DSA Support Document (Ref. 3), which includes the following topics:

- Administrative control levels
- Radiological worker dose limits
- Embryo/fetus dose limits
- Special control levels
- Planned special exposures
- Emergency exposures

In addition to the limits for transferable contamination mentioned in Section 7.4.3, laboratory technicians are instructed not to exceed the Radiological Work Permit (RWP) suspension guide limits while performing their jobs.

7.6.2 RADIOLOGICAL PRACTICES

The F/H Lab follows the SRS radiological practices as described in Manual 5Q (Ref. 5). The SRS radiological practices program is detailed in Chapter 7 of the SRS DSA Support Document, which includes the following topics (Ref. 3):

- Personnel protective equipment and clothing
- Radiological Work Permits
- Planning of radiological work
- Infrequent or first-time activities
- Stoppage of radiological work
- Radiological area boundaries, postings, and controls
- Contamination Control
- Shielding

Work group contamination control procedures are provided in Manual L2-1 (Ref. 9). These procedures apply specifically to F/H Lab personnel and are used to minimize personnel exposure and the spread of contamination during the performance of tasks unique to the F/H Lab.

Radiological postings are used at the F/H Lab to alert personnel of the presence of radiation and radioactive materials, to aid in minimizing exposures, and to prevent the spread of contamination. The F/H Lab follows the site requirements contained in Manual 5Q for radiological postings. The types of postings described in Chapter 7 of the SRS DSA Support Document that are used throughout the F/H Lab are as follows:

- Radiological Buffer Area
- Radioactive Material Area
- Radiation Area
- High Radiation Area
- Airborne Radioactivity Area
- Contamination Area
- High Contamination Area

The boundaries of designated radiological postings at the F/H Lab are periodically modified to accommodate changes in facility operations and nonroutine conditions arising from special work conditions. Other postings, as required by Manual 5Q, may be used commensurate with changes in radiation and radioactive material inventories and locations.

Permanent shielding in F/H Lab consists mostly of both normal and high density concrete for the shielded areas and shielded cells in Building 772-F and the shielded cells in Building 772-1F. In addition, lead shielding is used on gloveboxes in Building 772-F's rooms 159/163, and in cell exit gloveboxes in Building 772-1F's rooms 137/152.

7.6.3 DOSIMETRY

The F/H Lab follows the SRS dosimetry program as described in Manual 5Q (Ref. 5). The SRS dosimetry program is detailed in Chapter 7 of the SRS DSA Support Document, which includes the following topics (Ref. 3):

- External dosimetry
- Internal dosimetry
- Combining internal and external dosimetry units
- External and internal dosimetry accreditation
- Accident dosimetry
- Reports

Specific requirements for personnel radiation monitoring devices for radiological activities conducted in the F/H Lab are provided in sitewide procedures contained in Manual 5Q1.1 (Ref. 11). These requirements include the selection and use of various personnel dosimeters commensurate with the radiological conditions and hazards present at the work location and the

assigned task. These dosimeters provide a means for assessing the external and internal exposure of each laboratory worker to ionizing radiation.

Routine activities conducted in Radiological Buffer Areas (RBAs), Contamination Areas, and Radiation Areas at the F/H Lab require the use of Thermoluminescent Dosimeters (TLDs) to measure accumulated doses due to beta, gamma, and x-ray radiation. TLD exposure data are used as the official record of radiation exposure received by each laboratory worker.

Electronic Personal Dosimeters (EPDs) are often used in Radiation Areas in addition to TLDs to allow laboratory personnel to immediately determine their estimated gamma or x-ray exposure. F/H Lab personnel are required to wear EPDs when entering a high Radiation Area or when prolonged exposure to low radiation levels can result in significant doses. EPDs are usually worn for the duration of a particular laboratory assignment. No other routine personnel radiation self-monitoring devices are required at the F/H Lab.

RCO may require the use of special TLDs by laboratory personnel under certain conditions. Extremity TLDs, such as finger rings and/or additional TLDs for the forearm, feet, or ankles, may be required in cases where prolonged handling of radioactive materials may result in higher exposure to the extremities when compared to whole-body exposures. Special TLDs are also assigned to workers who inform supervision of pregnancy. The special TLD is worn on the pregnant worker's abdomen in addition to the TLD normally issued.

Special radiation monitoring devices such as Thermoluminescent Neutron Dosimeters, B-Line TLDs, and Criticality Neutron Dosimeters (CNDs) are not routinely required because low energy x-ray, neutron radiation, and significant quantities (i.e., multikilogram) of fissile material are not normally present at the F/H Lab. CNDs are used to measure doses from neutron and gamma radiation from a nuclear criticality accident. Since a nuclear criticality accident at the F/H Lab is determined to be an incredible event (see Section 3.4.3.2 of this SAR), CNDs are not required.

7.6.4 RESPIRATORY PROTECTION

The Manager of the Industrial Hygiene Programs Section has overall responsibility and authority for the respiratory protection program at SRS. Chapter 8 of this SAR provides additional information on the respiratory protection program. Manual 4Q1.6 provides details of the respiratory protection program (Ref. 12).

7.7 RADIOLOGICAL MONITORING

Manual 5Q1.2 requires the implementation of a Facility Annual Review of Monitoring Systems (FARMS), and provides detailed instructions for implementing these FARMS (Ref. 13). The F/H Lab FARMS is described in Reference 19.

7.7.1 RADIOLOGICAL MONITORING AND SURVEYS

The F/H Lab follows the SRS guidelines on radiological monitoring and surveys as described in Manual 5Q (Ref. 5). The F/H Lab is in accordance with the requirements of the SRS programs on radiological monitoring and surveys. Chapter 7 of the SRS DSA Support Document addresses radiological monitoring and surveys and includes the following topics (Ref. 3):

- General requirements
- Radiation surveys
- Contamination surveys
- Area radiation monitors
- Airborne radioactivity monitoring

Work group procedures on radiation and contamination surveys and practices are provided in Manual L2-1 and are specific to the F/H Lab (Ref. 9). Section 7.4.3 provides additional information regarding personnel practices for monitoring and surveys.

7.7.1.1 General Requirements

The general requirements for radiological monitoring and surveys are described in Chapter 7 of the SRS DSA Support Document (Ref. 3).

7.7.1.2 Radiation Surveys

Facility wide radiation surveys are performed in accordance with Manual 5Q (Ref. 5). As described in Chapter 7 of the SRS DSA Support Document (Ref. 3), radiation surveys include dose rate measurement of the general area and at specified distances from a radiation source. Radiation surveys also determine dose rates on contact with a specific source (i.e., hands-on contact with a bottle containing radioactive material). These measurements are taken periodically to assess potential whole-body exposures, as well as potential contact exposures.

7.7.1.3 Contamination Surveys

The F/H Lab limits radioactive contamination in accordance with the requirements discussed in Chapter 7 of the SRS DSA Support Document and Manual 5Q (Ref. 3, 5). These requirements include, but are not limited to, establishing limits for radioactive contamination and monitoring

airborne and surface contamination levels. As described in Section 7.8.4, contamination monitoring equipment is used to detect both fixed and removable surface contamination.

The potential spread of contamination is minimized by routine surveys to assess contamination levels throughout the F/H Lab and to detect abnormal conditions. The F/H Lab follows SRS guidelines on contamination control as described in Manual 5Q. In addition, the F/H Lab implements the requirements of Manual L2-1 to prevent the spread of contamination during the performance of F/H Lab-specific tasks (Ref. 9).

7.7.1.4 Area Radiation Monitors

As described in Chapter 7 of the SRS DSA Support Document, area radiation monitors are installed in frequently occupied locations with the potential for unexpected increases in radiation dose rates and in remote locations where a need exists for local indication of radiation levels prior to personnel entering these areas (Ref. 3). Area radiation monitoring is performed in accordance with Manual 5Q (Ref. 5). Section 7.8.4 provides a discussion of area radiation monitors installed throughout the F/H Lab for the purpose of detecting gamma radiation and assessing potential whole-body exposure to personnel required to perform work in designated areas.

7.7.1.5 Airborne Radioactivity Monitoring

Airborne radioactivity monitoring equipment is installed at the F/H Lab to detect airborne radioactivity levels, thereby preventing or minimizing inhalation of radioactive contamination by personnel. Airborne radioactivity monitoring is performed in accordance with Manual 5Q (Ref. 5). As discussed in Section 7.8.4, constant air monitoring and filter paper sampling systems are installed in both Buildings 772-F and 772-1F. These systems detect airborne radioactive contamination.

7.7.2 RADIOLOGICAL ENVIRONMENTAL MONITORING

The discharge from the main air exhaust systems in Buildings 772-F, 772-1F, and 772-4F are monitored for potentially radioactive airborne particulates by stack monitoring systems, which are described in Chapters 2 and 9 of this SAR. Air from the offgas exhaust systems is also monitored for radioactive particles. At present, no radioactive gaseous effluents are generated at the F/H Lab. The F/H Lab is required to monitor only radioactive particulate effluents from the exhaust stacks, since the non-radioactive hazardous effluent is at “de minimus” levels.

As described in Chapters 2 and 9, all liquid effluents generated by analytical processes at the F/H Lab are collected and temporarily placed in the high- and low-activity drain tanks and are not released to the environment. The high-activity returns are transferred by pump to an approved package for transfer to H Area. The low-activity waste is pumped through a process sewer to the Effluent Treatment Plant for disposal.

7.7.3 ASSOCIATED RECORDS/REPORTS

The F/H Lab radiological control records are maintained in accordance with SRS document control procedures and the SRNS Records Inventory and Disposition Schedule in accordance with Chapter 7 of the SRS DSA Support Document and the SRS records inventory program (Ref. 3, 14).

7.7.4 METEOROLOGICAL DATA COLLECTION/EVALUATION

Section 1.4.1 of the SRS DSA Support Document provides details of SRS meteorology programs that are applicable to the F/H Lab (Ref. 15). The F/H Lab does not collect or evaluate meteorological data.

7.8 RADIOLOGICAL PROTECTION INSTRUMENTATION

7.8.1 CRITERIA FOR SELECTION OF EQUIPMENT AND INSTRUMENTATION

The criteria for selection of equipment and instrumentation used for radiological protection at the F/H Lab are consistent with the site program as detailed in Chapter 7 of the SRS DSA Support Document (Ref. 3). The SRS DSA Support Document SAR also discusses the instrument procurement process.

The F/H Lab RCO uses procedures in Manuals 5Q1.2 and 5Q1.3 to determine the appropriate equipment and associated instructions to use for routine and nonroutine surveys to monitor and radiologically characterize work locations (Ref. 13, 16). Laboratory technicians use Manual L2-1 to determine the types of portable instruments to use for a specific task and to check that the instruments operate properly within limits (Ref. 9).

7.8.2 CONTROL OF THE CALIBRATION PROCESS

The F/H Lab follows the site program for the control of the calibration process for instruments used in radiological protection as described in Chapter 7 of the SRS DSA Support Document (Ref. 3). Personnel in the ESH&Q Department are responsible for calibration, distribution, storage, and maintenance of portable radiation survey instruments, direct-reading and electronic dosimeters, and portable instrument procurement. The ESH&Q Department operates the calibration facility. Equipment and sources used for calibrating and testing instruments are controlled and calibrated to the extent needed to determine compliance with performance requirements. Radiological instruments are periodically calibrated and tested to verify proper performance.

Calibration of fixed instrumentation is the responsibility of Central Services Works Engineering. Initial calibration is performed when the equipment is installed. The length of time between subsequent calibrations varies depending on the instrument but does not exceed 1 year.

Laboratory technicians use Manual L2-1 to check for proper operation and response of equipment prior to use and during assigned laboratory activities (Ref. 9).

7.8.3 QUALITY ASSURANCE FOR CALIBRATION AND MAINTENANCE

Chapter 7 of the SRS DSA Support Document provides sitewide requirements for calibration and maintenance of radiological instruments (Ref. 3). There are no F/H Lab-specific procedures for calibration and maintenance of radiological instrumentation and equipment. The sitewide calibration procedures are developed by ESH&Q for each radiological instrument type. Calibration procedures include requirements for the following:

- Precalibration
- Frequency of calibration

- Primary calibration
- Periodic performance testing

7.8.4 TYPES OF DETECTORS AND MONITORS

The F/H Lab uses standard types of monitors and detectors that are commonly used throughout SRS. The criteria used for instrument selection, sensitivity, and range are referred to in Section 7.8.1.

7.8.4.1 Airborne Radioactive Particulate and Liquid Effluent Monitoring

Section 2.7 of this SAR provides a detailed description of the instruments used to monitor airborne radioactive particulates in the main and offgas exhaust systems at the F/H Lab.

All liquid effluents generated by analytical processes are collected and temporarily placed in the appropriate high- and low- activity drain tanks for eventual transfer to H Area for the high-activity effluents and the Effluent Treatment Facility for the low-activity effluents. There is no instrumentation installed in the F/H Lab specifically dedicated to monitor liquid effluent because the liquids generated by analytical processes are not released from the F/H Lab to the environment.

7.8.4.2 Solid Waste Monitoring

Section 2.7 of this SAR provides a detailed description of solid waste monitoring.

7.8.4.3 Radiation and Contamination Monitors

Radiation and contamination monitoring equipment is used to detect radiation and both removable and fixed surface contamination. Although the F/H Lab environment does not routinely contain airborne radioactive particulates, airborne radioactive contamination monitors can prevent or minimize the inhalation of radioactive contaminants by laboratory personnel by providing early detection of unusual airborne releases and greater than normal fluctuations in background radiation levels. Airborne radioactive contamination monitors are provided in Buildings 772-F and 772-1F as described in the following sections. All equipment is selected commensurate with the types of radiation or contamination to be detected.

BUILDING 772-F

Area Radiation Monitors

Building 772-F does not handle significant quantities of high radiation materials, and no area radiation monitors are installed.

Filter Paper Sampling System

Building 772-F relies primarily on the filter paper sampling system to detect airborne contamination. Each sampler consists of a high efficiency filter mounted on a stainless steel head and a controlling valve and rotameter for adjusting the sampling flow rate. Sampling vacuum is provided by the air monitoring fans as described in Section 2.7.7.1. Radioactive particulates collected on the filter paper are measured by RCO. The filter paper elements are replaced after each measurement. All sampled air is discharged to the main exhaust system and monitored by the stack effluent monitoring system. In the event that radionuclide activity on the filter paper elements exceeds pre-established RCO radiation contamination limits, laboratory operations may be temporarily suspended until the cause of the high activity level is determined.

Constant Air Alpha Monitors

Constant air alpha monitors of various designs are provided for areas where significant quantities of plutonium are handled (typically, lab modules with gloveboxes). When a monitor exceeds the preset limit of contamination, a local alarm (audible/visual) annunciates at the sampling location.

Beta Airborne Contamination Monitors

There are no dedicated permanently installed monitors for the detection of airborne beta contamination in Building 772-F. Filter paper samplers currently serve a dual purpose as passive collection media for airborne beta-gamma contamination and alpha contamination. The samplers' media are manually counted for alpha plus beta-gamma activity.

Count Rate Meters

Count Rate Meters (CRMs) typically use hand-held probes for detecting external contamination (e.g., on personnel, surface areas, and tools) prior to personnel exiting an RBA or Contamination Area. A CRM provides an indication of contamination levels during a whole-body survey (i.e., frisk) through the use of a metered scale and audible signals. CRMs are installed at RBA and Contamination Area exit locations where radioactive materials are handled. These locations include, but are not limited to, the following:

- Laboratory modules
- Service chases
- Counting rooms
- Staging areas adjacent to the shielded cells
- Service floor

Personnel Contamination Monitors

Personnel Contamination Monitors (PCM)-1Bs are nonportable monitors used to provide a quick and reliable level of external alpha and beta-gamma contamination detection for personnel prior to leaving an RBA and after exiting a Contamination Area into an RBA. PCM-1Bs are also effective at detecting hot particles as well as extremely low levels of naturally occurring radon decay products. The PCM-1Bs are engineered to perform two counts: a right body count and a left body count. If preset levels are exceeded, a PCM-1B will provide an audible continuous beeping alarm and an overhead panel visual signal.

Portable Radiation Instruments

A variety of portable radiation and contamination instruments are used in Building 772-F. Instruments are selected and used by personnel to detect alpha, beta, gamma, and neutron radiation where needed.

BUILDING 772-1F

Area Radiation Monitors

Area gamma radiation monitors are installed in Building 772-1F primarily to detect radiation from nearby sources and elevated gamma radiation levels in the laboratory modules, maintenance chases, and filter room and near the shielded cells.

Filter Paper Sampling System

Building 772-1F uses the filter paper sampling system to detect airborne contamination in offices, corridors, and filter and fan rooms. Design and operation of the filter paper sampling equipment are similar to those for Building 772-F.

Beta Airborne Contamination Monitors

As with Building 772-F, no dedicated permanently installed monitors for the detection of airborne beta contamination are installed for Building 772-1F. The filter paper samplers installed in Building 772-1F currently serve a dual purpose as passive collection media for airborne alpha and beta-gamma contamination. The samplers' media are manually counted for alpha plus beta-gamma activity.

Count Rate Meters

As with Building 772-F, CRMs are installed in Building 772-1F. The design and operation of the CRMs in Building 772-1F are the same as those for Building 772-F. CRMs are installed at RBA and Contamination Area exit locations where radioactive materials are handled. These

locations include, but are not limited to, the laboratory modules, the counting rooms, and the staging areas adjacent to the shielded cells.

Personnel Contamination Monitors

PCM-1Bs for Building 772-1F are the same as those described for Building 772-F.

Portable Radiation Instruments

A variety of portable radiation and contamination detection instruments are used in Building 772-1F. Instruments are selected and used by personnel to detect alpha, beta, gamma, and neutron radiation where needed.

BUILDING 772-4F

Building 772-4F is considered a Controlled Area. Filter paper samplers for airborne contamination monitoring of the building exhaust are permanently installed in this building. Low levels of radionuclide contamination exist only in the ductwork and in the High-Efficiency Particulate Air filters and housings, which are sealed from the facility environment.

B-25 WASTE CONTAINER STAGING AREAS

The B-25 Waste Container Staging Areas are outdoors. The B-25 Waste Container Staging Areas are RBA. There is no permanently installed radiation monitoring equipment in the B-25 Waste Container Staging Areas. Portable radiation survey instruments are used as needed.

7.8.5 CONTAMINATION CONTROL EQUIPMENT AND FACILITIES

Decontamination supplies for F/H Lab are maintained in, or near, the RCO offices of Buildings 772-F and 772-1F. They are adequate for most personnel and equipment decontamination needs. More extensive decontamination is done in Building 772-F. Sufficient activity monitors are routinely available in Buildings 772-F and 772-1F to satisfy personnel and equipment decontamination needs.

7.9 RADIOLOGICAL PROTECTION RECORDKEEPING

Manuals 5Q and 5Q derivative manuals contain the prescribed practices for preparing and retaining radiologically related records at the F/H Lab (Ref. 5, 11, 13, 16). Chapter 7 of the SRS DSA Support Document details record keeping practices for the inventory, retention, and disposition of records and reports and the maintenance of plans and procedures (Ref. 3). There are no F/H Lab-specific procedures for radiological record keeping.

7.10 OCCUPATIONAL RADIATION EXPOSURE

Historical exposure data are maintained for all site personnel, including F/H Lab workers, by ESH&Q Radiological Protection Department. Monthly and quarterly reports of personnel occupational radiation exposure are compiled and permanently maintained by the ESH&Q Radiological Protection Department and copies are transmitted to all facility managers and RCO for distribution to personnel. No requirements exist for the F/H Lab to maintain permanent records of these personnel radiation exposure reports.

Sign-in records (hardcopy or electronic) hold individual external occupational radiation exposures that are either estimated or measured by EPDs. The sign-in records are maintained in accordance with Manual 5Q1.1 (Ref. 11).

The Administrative Control Level is based on anticipated work at the F/H Lab and is intended to provide a realistic goal to help keep doses ALARA. The DOE annual Administrative Control Level for maximum radiation exposure to a single worker is 2,000 mrem.

7.11 REFERENCES

1. Nuclear Safety Management. Title 10 Energy, Code of Federal Regulations, Part 830, U.S. Department of Energy, Washington, DC, January 2006.

2. Deleted

3. Savannah River Site DSA Support Document – Site Characteristics and Program Descriptions. Rev. 0, WSRC-IM-2004-00008, Westinghouse Savannah River Company, Aiken, SC, October 2004.

4. Technical Safety Requirements, Savannah River Site, F-Area Central Laboratory Facility, Buildings 772-F, 772-1F, and 772-4F. WSRC-TS-95-18, Westinghouse Savannah River Company, Aiken, SC.

5. Radiological Controls. Manual 5Q, Savannah River Nuclear Solutions, Aiken, SC.

6. Savannah River Site ALARA Manual. Manual SCD-6, Savannah River Nuclear Solutions, Aiken, SC.

7. Deleted

8. Deleted

9. Analytical Laboratories CLAB Multi-Group Procedures. Manual L2-1, Savannah River Nuclear Solutions, Aiken, SC.

10. Deleted

11. Safety and Health Department Radiation and Contamination Control Procedures. Manual 5Q1.1, Savannah River Nuclear Solutions, Aiken, SC.

12. Respiratory Protection Manual. Manual 4Q1.6, Savannah River Nuclear Solutions, Aiken, SC.

13. Safety and Health Department Radiation Monitoring Procedures. Manual 5Q1.2, Savannah River Nuclear Solutions, Aiken, SC.

14. WSRC Sitewide Records Inventory and Disposition Schedule (RIDS). WSRC-IM-93-0060, Westinghouse Savannah River Company, Aiken, SC.

15. Savannah River Site DSA Support Document – Site Characteristics and Program Descriptions. Chapter 1, "Site Characteristics," Rev. 0, WSRC-IM-2004-00008, Westinghouse Savannah River Company, Aiken, SC, October 2004.

16. Safety and Health Department Radiation Survey Instruments. Manual 5Q1.3, Savannah River Nuclear Solutions, Aiken, SC.

17. Deleted

18. Conduct of Maintenance. Manual 1Y, Savannah River Nuclear Solutions, Aiken, SC.

19. Facility Annual Review of Monitoring Systems (FARMS) Facility: CLAB. CBU-FHO-2003-00092, Westinghouse Savannah River Company, Aiken, SC, September 2003.

WSRC-SA-96-26
REV. 8

CENTRAL LABORATORY FACILITY -
BUILDINGS 772-F, 772-1F, AND 772-4F
SAFETY ANALYSIS REPORT

CHAPTER 8

HAZARDOUS MATERIAL PROTECTION

May 2010

Savannah River
Nuclear Solutions, LLC
A Fluor Daniel Partnership

DISCLAIMER

This document was prepared by Savannah River Nuclear Solutions LLC (SRNS), under contract with the United States Department of Energy (DOE).

Release to and Use by Third Parties. As it pertains to releases of this document to third parties, and the use of or reference to this document by such third parties in whole or in part, neither SRNS, DOE, nor their respective officers, directors, employees, agents, consultants or personal services contractors (i) make any warranty, expressed or implied, (ii) assume any legal liability or responsibility for the accuracy, completeness, or usefulness, of any information, apparatus, product or process disclosed herein or (iii) represent that use of the same will not infringe privately owned rights. Reference herein to any specific commercial product, process, or service by trademark, name, manufacture or otherwise, does not necessarily constitute or imply endorsement, recommendation, or favoring of the same by SRNS, DOE or their respective officers, directors, employees, agents, consultants or personal services contractors. The views and opinions of the authors expressed herein do not necessarily state or reflect those of the United States Government or any agency thereof.

CONTENTS

Page

8.0 HAZARDOUS MATERIAL PROTECTION 8.1-1

8.1 INTRODUCTION 8.1-1

8.1.1 Objective 8.1-1

8.1.2 Scope 8.1-1

8.2 REQUIREMENTS 8.2-1

8.3 HAZARDOUS MATERIAL PROTECTION AND ORGANIZATION 8.3-1

8.3.1 Overall Organization 8.3-1

8.3.2 F/H Area Laboratory Facility Manager 8.3-1

8.3.3 Cognizant Technical Function 8.3-1

8.3.4 Chemical Coordinator 8.3-2

8.3.5 Laboratory Supervisor, Quality Control and Reagent Preparation Group 8.3-2

8.3.6 Environmental Services Section 8.3-2

8.3.7 F/H Area Laboratory Personnel 8.3-2

8.3.8 Field Procurement Engineer 8.3-2

8.4 ALARA POLICY AND PROGRAM 8.4-1

8.5 HAZARDOUS MATERIAL TRAINING 8.5-1

8.5.1 Training Topics 8.5-1

8.5.2 Training Frequencies 8.5-1

8.6 HAZARDOUS MATERIAL EXPOSURE CONTROL 8.6-1

8.6.1 Hazardous Material Identification Program 8.6-1

8.6.2 Administrative Limits 8.6-1

8.6.3 Occupational Medical Programs 8.6-1

8.6.4 Respiratory Protection 8.6-1

8.7 HAZARDOUS MATERIAL MONITORING 8.7-1

8.7.1 Hazardous Material Monitoring 8.7-1

8.7.2 Air Monitoring 8.7-1

8.7.2.1 Air Monitoring in the Workplace 8.7-1

8.7.2.2 Air Monitoring Outside the Facility 8.7-2

8.7.3 Hazard Prevention And Control 8.7-2

8.8 HAZARDOUS MATERIAL PROTECTION INSTRUMENTATION 8.8-1

8.9 HAZARDOUS MATERIAL PROTECTION RECORDKEEPING 8.9-1

8.9.1 Records Content And Accessibility 8.9-1

8.9.2 Controlling Inventory, Retention, And Disposition Of Records And Reports 8.9-1

8.9.3 Document Control Of Plans And Procedures 8.9-1

8.10 HAZARD COMMUNICATION PROGRAM 8.10-1

8.10.1 Written Program Locations 8.10-1

8.10.2 Hazard Evaluation 8.10-1

8.10.3 Hazardous Chemical List 8.10-1

8.10.4 Nonroutine Tasks 8.10-1

8.10.5 Hazard Warning Labeling 8.10-2

8.10.6 Material Safety Data Sheets 8.10-2

8.10.7 Information And Training 8.10-2

8.10.8 Notification Of Hazards To Contractors 8.10-2

8.11 OCCUPATIONAL CHEMICAL EXPOSURES 8.11-1

8.12 REFERENCES 8.12-1

ACRONYMS AND ABBREVIATIONS

ALARA	As Low As Reasonably Achievable
CFR	Code of Federal Regulations
DOE	Department of Energy
DSA	Documented Safety Analysis
ERPG	Emergency Response Planning Guideline
ESH&QA	Environmental, Safety, Health, and Quality Assurance
F/H Lab	F/H Area Laboratory
IH	Industrial Hygiene
MSDS	Material Safety Data Sheet
OS&H	Occupational Safety and Hygiene
RCRA	Resource Conservation and Recovery Act
SAR	Safety Analysis Report
SRNS	Savannah River Nuclear Solutions
SRS	Savannah River Site
WSRC	Westinghouse Savannah River Company

8.0 HAZARDOUS MATERIAL PROTECTION

8.1 INTRODUCTION

8.1.1 OBJECTIVE

The objective of this chapter is to describe the hazardous material protection provisions at the F/H Area Laboratory (F/H Lab). The purpose of this chapter is to provide information pertaining to nonradioactive hazardous material protection as per the guidance provided in DOE-STD-3009 (Ref. 2).

8.1.2 SCOPE

This chapter describes the hazardous material protection provisions (other than radiological hazards) for F/H Lab workers and the public. The products of this chapter are as follows:

- Description of the overall hazardous material protection program and organization
- Description of the hazardous material As Low As Reasonably Achievable (ALARA) policy and program
- Description of hazardous material exposure control, including identification of hazardous material, administrative limits, occupational medical programs, and respiratory protection
- Identification of hazardous material monitoring to protect workers, the public, and the environment
- Discussion of hazardous material protection instrumentation
- Description of the plans and procedures for maintaining records of hazardous materials, hazard communications, and occupational exposures

When required information is provided in another chapter of this Safety Analysis Report (SAR) or the Savannah River Site (SRS) Documented Safety Analysis (DSA) Support Document, that chapter is referenced to limit repetition. In those cases where policies, programs, and practices important to safe operation are described in detail in other site documents, the salient features are summarized for inclusion in this chapter and the documents are referenced.

8.2 REQUIREMENTS

The Savannah River Nuclear Solutions (SRNS) Industrial Hygiene (IH) program, which includes the site hazardous material protection program, is designed to comply with various requirements. Section 8.2 of the SRS DSA Support Document discusses the implementing procedure manual for Standards/Requirements Identification Document (S/RID) industrial hygiene requirements, which is Manual 4Q (Ref. 3). The hazardous material protection program for the F/H Lab is in compliance with the site IH program delineated in Manual 4Q (Ref. 3). This assertion is based on the periodic assessments performed by Savannah River Site (SRS) Industrial Hygiene and DOE Environmental Hygiene of F/H Lab chemical hazards, chemical handling, and hazardous chemical programs.

8.3 HAZARDOUS MATERIAL PROTECTION AND ORGANIZATION

8.3.1 OVERALL ORGANIZATION

SRNS is committed to providing a place and condition of employment that is free from or protected against recognized hazards that cause or are likely to cause sickness, impaired health and well-being, or significant discomfort and inefficiency among workers. This occupational health objective is achieved through a comprehensive industrial hygiene program based on the following (Ref. 4):

- Management commitment and employee involvement
- Work site analysis
- Hazard identification
- Program review
- Hazard prevention and control
- Safety and health training
- Program assessment

The SRS IH program is managed by the Industrial Hygiene (IH) Section of the Occupational Safety and Hygiene Department (OS&H) of the Environmental, Safety, Health, and Quality Assurance Division (ESH&QA). Section 8.3 of SRS DSA Support Document (Ref. 1) describes the overall organization above the facility level. The following sections describe the organization at the F/H Lab.

8.3.2 F/H AREA LABORATORY FACILITY MANAGER

The F/H Lab Facility Manager has the following IH responsibilities (Ref. 3):

- Ensuring that facility operations involving occupational exposures to chemical, physical, or biological agents are in compliance with DOE Orders, DOE-prescribed OS&H standards, and IH program requirements
- Ensuring that area industrial hygienists are fully informed of operations and activities that may involve employee exposures to new or existing chemical, physical, or biological agents
- Designating the cognizant technical function for review of materials

8.3.3 COGNIZANT TECHNICAL FUNCTION

The cognizant technical function is responsible for reviewing and identifying potential hazards and establishing chemical storage ratings (Ref. 8).

8.3.4 CHEMICAL COORDINATOR

The chemical coordinator is responsible for ensuring Material Safety Data Sheets (MSDSs) are available for chemicals used in F/H Lab (Ref. 8).

8.3.5 LABORATORY SUPERVISOR, QUALITY CONTROL AND REAGENT PREPARATION GROUP

The laboratory supervisor of the Quality Control and Reagent Preparation Group is responsible for the preparation and handling of reagents and chemicals used in analytical operations at the F/H Lab.

8.3.6 ENVIRONMENTAL SERVICES SECTION

The Environmental Services Section is responsible for providing regulatory guidance to laboratory operations for compliance with applicable environmental laws and regulations.

8.3.7 F/H AREA LABORATORY PERSONNEL

F/H Lab personnel are responsible for the following (Ref. 8):

- Obtaining a review and identification of possible hazardous constituents before ordering or procuring chemicals and chemical products for use in the F/H Lab. The labeling is performed upon receipt, and before use or storage, of any material indicated by the review as potentially hazardous constituents.
- Safely handling hazardous materials according to all procedures appropriate for the work area.
- Complying with all procedures governing the disposal and control of contaminated rags and wipes, both radioactive and nonradioactive, that have been in contact with solvents listed as hazardous by Environmental Protection Agency criteria.

8.3.8 FIELD PROCUREMENT ENGINEER

The Field Procurement Engineer is responsible for ensuring that a review of possible hazardous constituents has been included with purchase orders of all items containing chemicals.

8.4 ALARA POLICY AND PROGRAM

The As Low as Reasonably Achievable (ALARA) concepts employed in minimizing occupational radiation exposure are integrated into the SRS IH program as it relates to known carcinogens. Section 8.4 of the SRS DSA Support Document discusses the site's generic ALARA policy and program (Ref. 1).

8.5 HAZARDOUS MATERIAL TRAINING

The SRS IH training criteria, which include hazardous material protection training, specify IH training requirements for the following personnel categories (Ref. 3):

- Employees assigned to or involved in IH staff positions or activities
- SRS personnel and subcontractors

Section 8.5 of the SRS DSA Support Document describes the training requirements and guidelines established by the IH program for these two personnel categories (Ref. 1). Manual 4Q describes the generic sitewide training program (Ref. 3).

The hazardous material training requirements and guidelines identified in Section 8.5 of the SRS DSA Support Document along with the training requirements and guidelines in this section and in Section 17.3.3 of the F/H Lab SAR are sufficient to qualify F/H Lab personnel.

The following sections describe area- and F/H Lab-specific training requirements and guidelines.

8.5.1 TRAINING TOPICS

The following training topics are covered:

- Chemical hazards specific to the employee's work area (e.g., flammables, corrosives, oxidizers)
- Identification of the cognizant chemical coordinator
- Location(s) of the SRS hazard communication program, chemical index, and MSDS
- Methods to detect the presence of hazardous chemicals that employees may be exposed to (e.g., sight, odor, color, or alarm, if applicable)

8.5.2 TRAINING FREQUENCIES

Area-specific training for new or transferred employees is provided upon an employee's initial assignment to the F/H Lab. Employees transferring from other departments, who have received hazard communication training for the current year, need only receive the area-specific training for the location of their new assignment. Training is documented on the site's TRAIN electronic database system and in individual training files maintained at the business unit level.

8.6 HAZARDOUS MATERIAL EXPOSURE CONTROL

This section summarizes the plans and procedures for controlling occupational exposure to hazardous materials and the spread of hazardous material contamination.

8.6.1 HAZARDOUS MATERIAL IDENTIFICATION PROGRAM

This section addresses the hazardous material identification program, referred to as the hazard assessment program, within the SRNS IH program. Section 8.6.1 of the SRS DSA Support Document (Ref. 1) and Manual 4Q describe the methods used for identifying and evaluating health and chemical hazards and for determining the adequacy of and the need for hazard prevention or control measures (Ref. 3, 7). F/H Lab procedures contained in Manuals L2-1 and L2 provide the requirements for controlling the spread of hazardous material contamination at the F/H Lab (Ref. 5, 8).

8.6.2 ADMINISTRATIVE LIMITS

F/H Lab hazardous material exposure limits follow site requirements set forth in Manual 4Q (Ref. 3). There are no facility-specific administrative limits for hazardous materials in the F/H Lab.

8.6.3 OCCUPATIONAL MEDICAL PROGRAMS

Section 8.6.3 of the SRS DSA Support Document describes the SRNS occupational medical program at SRS, especially as it relates to hazardous material protection (Ref. 1).

8.6.4 RESPIRATORY PROTECTION

Section 8.6.4 of the SRS DSA Support Document describes the SRNS respiratory protection program used to protect employees from exposure to atmospheric contaminants (radioactive or nonradioactive) by using facilities and equipment with safeguards incorporated in their design (Ref. 1). When effective engineering controls are not feasible, or while they are being initiated, protection is provided through the use of approved respiratory devices.

8.7 HAZARDOUS MATERIAL MONITORING

This section describes the hazardous material monitoring and control programs conducted inside and outside the boundaries of the facility. Records associated with the hazardous material monitoring and control programs satisfy the requirements relating to records management listed in Section 8.9.

8.7.1 HAZARDOUS MATERIAL MONITORING

Monitoring of hazardous materials inside and outside the boundaries of the F/H Lab during normal and nonroutine operations is accomplished by special IH surveys conducted by the IH staff or designated facility personnel. Chapter 3 of this SAR identifies the hazardous materials in the F/H Lab. Specific nonradioactive hazardous material survey frequencies are dependent upon the type of hazardous materials present and upon previous survey results.

8.7.2 AIR MONITORING

This section describes the airborne hazardous material sampling and monitoring programs conducted inside and outside the boundaries of the facility. Section 8.7.2.1 describes the program for air monitoring in the workplace, and Section 8.7.2.2 describes the program for air monitoring outside the facility.

Section 8.7.2.1 of the SRS DSA Support Document describes generic elements of the program for air monitoring in the workplace, including the following (Ref. 1):

- Reasons for air monitoring
- General guidance on sampling
- Assessment of exposures
- Sampling frequency
- Documentation of results

8.7.2.1 Air Monitoring in the Workplace

Air samples inside the F/H Lab are obtained by special IH surveys conducted by the IH staff or designated facility personnel. The samples are analyzed at the job site by portable instruments, and the analysis results are evaluated, documented on IH data forms, and reported to F/H Lab management. Records and reports are generated to inform F/H Lab management of the results and any recommendations. Manual 4Q1.2 (Ref. 14), identifies instruments and procedures used for analyzing air samples from the F/H Lab.

Any confined space entry requires monitoring for explosive gases and adequate oxygen content. Air samples are taken on a nonroutine basis for welding and painting fumes. Hazardous material

exposure to employees at the F/H Lab is monitored during scheduled inspections of operations with hazardous material and is also determined after the occurrence of an accident that involves the release of hazardous material.

There are no fixed nonradioactive hazardous material monitors in the immediate area outside the F/H Lab to monitor for F/H Lab releases.

8.7.2.2 Air Monitoring Outside the Facility

Airborne hazardous material sampling and monitoring outside the F/H Lab are performed by the IH staff or designated facility personnel during special IH surveys. There is no continuously operating hazardous material monitoring instrumentation or alarms in the immediate vicinity outside the F/H Lab. Hazardous material releases outside the F/H Lab are monitored only during scheduled inspections and after the occurrence of an accident that involves the release of hazardous material. The air monitoring analytical results are documented on IH data forms. Records and reports are generated by the IH Section or designated facility personnel to inform F/H Lab management of the results and any recommendations.

8.7.3 HAZARD PREVENTION AND CONTROL

Section 8.7.3 of the SRS DSA Support Document establishes the guidance for identifying and recommending effective engineering, work practice, and administrative controls to reduce employee exposures to occupational hazards (Ref. 1). Hazard prevention and control for the F/H Lab are performed in accordance with Manual 4Q (Ref. 3). Section 8.7.3 of the SRS DSA Support Document specifies the following:

- Hierarchy of hazard prevention and control measures
- Requirements for the design authority technical engineer and area industrial hygienist concerning hazard prevention and control
- Process of prioritizing recommendations for new engineering control design projects

8.8 HAZARDOUS MATERIAL PROTECTION INSTRUMENTATION

Monitoring of hazardous materials inside and outside the boundaries of the F/H Lab during normal and nonroutine operations is accomplished by special IH surveys conducted by the IH staff or designated facility personnel. There are no fixed nonradioactive hazardous material monitors installed at the F/H Lab. Surveys for routine and non-routine hazardous materials/conditions are by special Industrial Hygiene portable instrumentation that is owned, operated, and maintained by IH. These instruments' sensitivities, operating ranges, calibration/maintenance procedures, etc. are included in Manual 4Q1.2, Industrial Hygiene Instruments (Ref. 14). Procedures for conducting IH surveys are included in Manual 4Q 1.1, Industrial Hygiene Survey Procedures (Ref. 7).

8.9 HAZARDOUS MATERIAL PROTECTION RECORDKEEPING

This section addresses the records requirements within the SRNS IH program at SRS.

8.9.1 RECORDS CONTENT AND ACCESSIBILITY

Section 8.9.1 of the SRS DSA Support Document lists the records that SRNS maintains to support health surveillance activities (Ref. 1). The SRS DSA Support Document section also states that these records are made available upon request to DOE, the site OS&H committee, occupational medical program personnel, and employees. The Facility Manager receives a copy of surveillance records, and the IH staff or designated facility personnel retain a copy of surveillance records.

8.9.2 CONTROLLING INVENTORY, RETENTION, AND DISPOSITION OF RECORDS AND REPORTS

Section 8.9.2 of the SRS DSA Support Document identifies the SRNS procedures related to records management for compliance with DOE requirements (Ref. 1). The surveillance records are stored in accordance with the SRNS Records Inventory and Disposition Schedule.

8.9.3 DOCUMENT CONTROL OF PLANS AND PROCEDURES

Section 8.9.3 of the SRS DSA Support Document describes the process used to ensure that IH plans and procedures (including changes) are reviewed for adequacy, approved for release by authorized personnel, and distributed to and used at the locations where hazardous materials are used, processed, or stored (Ref. 1).

8.10 HAZARD COMMUNICATION PROGRAM

Section 8.10 of the SRS DSA Support Document describes the SRS hazard communication program elements. The following sections describe aspects of the hazard communication program specific to the F/H Lab (Ref. 1).

8.10.1 WRITTEN PROGRAM LOCATIONS

The SRS hazard communication program is maintained as a procedure within Manual 4Q by the IH Section (Ref. 3). Copies are maintained electronically for sitewide access.

8.10.2 HAZARD EVALUATION

Nonradioactive chemicals, either manufactured onsite or imported from offsite, are evaluated to determine if they are hazardous. SRNS determines the hazards of chemicals for which manufacturer MSDSs cannot be obtained. Hazard evaluations of chemicals are performed in accordance with the requirements of Title 29 Code of Federal Regulations (CFR) Part 1910.1200, Appendix B (Ref. 10). MSDSs and warning labels are developed based on current technical information.

8.10.3 HAZARDOUS CHEMICAL LIST

IH and Chemical Commodities Management Center maintains a sitewide electronic list of all chemicals at SRS, and routinely provides updates to reflect current chemical usage.

8.10.4 NONROUTINE TASKS

Section 8.10.4 of the SRS DSA Support Document provides the steps required to evaluate hazards associated with nonroutine tasks, such as opening pipelines and vessels (Ref. 1). These nonroutine tasks are covered by special written job plans, procedures, or Assisted Hazard Analyses. A chemical review and the approval of the cognizant chemical coordinator are required if the job activity involves the use of nonroutine chemicals. The following permits are also required as applicable:

- Confined space entry
- Asbestos
- Flame (welding)

Manual 2S describes other requirements (e.g., special instructions) (Ref. 11).

8.10.5 HAZARD WARNING LABELING

Section 8.10.5 of the SRS DSA Support Document states the requirements to label, tag, or mark containers of chemicals received, delivered, or used by the F/H Lab (Ref. 1). The SRS DSA Support Document section also includes the responsibilities of the chemical custodian in situations where the chemical container is inappropriately labeled or where the label is torn or defaced.

8.10.6 MATERIAL SAFETY DATA SHEETS

Section 8.10.6 of the SRS DSA Support Document delineates the information that MSDSs are required to contain and the process of developing MSDSs for chemicals currently used at SRS (Ref. 1). The SRS DSA Support Document section also states the SRNS requirement that employees have access to MSDSs for the products they are required to use. The locations of F/H Lab MSDSs and the identifications of the departmental chemical coordinators are displayed in the F/H Lab work areas. Primary access to MSDSs is via a sitewide electronic system (intranet). Emergency 24-hour access to printed copies is maintained at Document Control, located in Building 704-1N.

8.10.7 INFORMATION AND TRAINING

SRNS provides employees with information and training on hazardous chemicals in their work area (1) at the time of their initial assignment and annually thereafter, (2) whenever a new hazard is introduced into the workplace, and (3) for nonroutine tasks. This training consists of two programs supplemented by area-specific training. As described in Section 8.10.6 of the SRS DSA Support Document, one training program is for employees who have a low potential for exposure to hazardous chemicals, and the other training program is for employees who have a significant potential for exposure to hazardous chemicals (Ref. 1). Section 8.5 describes F/H Lab-specific training.

8.10.8 NOTIFICATION OF HAZARDS TO CONTRACTORS

The Subcontractor Technical Representative informs subcontractors of the requirements specified in the SRS hazard communication program. Information on the hazards of chemicals used onsite is communicated through hazard communication training, MSDSs, and hazard warning labels. Subcontractors are required to label and use chemicals as prescribed in site and facility procedures and MSDSs.

8.11 OCCUPATIONAL CHEMICAL EXPOSURES

The predicted exposure levels to workers in the F/H Lab from nonradioactive hazardous materials are expected to be negligible (Ref. 12, 13). Based on F/H Lab chemical inventories, the maximum local airborne chemical concentrations are less than their associated equivalent Emergency Response Planning Guideline 3 (ERPG-3) values (Ref. 12, 13). Chemical exposure reviews/assessments are performed periodically, or upon facility request, by SRS Industrial Hygiene. Records of these reviews/assessments are kept according to site records requirements.

8.12 REFERENCES

1. Savannah River Site DSA Support Document – Site Characteristics and Program Descriptions. Rev. 0, WSRC-IM-2004-00008, Westinghouse Savannah River Company, Aiken, SC, October 2004.

2. Preparation Guide for U S Department of Energy Nonreactor Nuclear Facility Documented Safety Analysis. DOE-STD-3009-94, CN3, U.S. Department of Energy, Washington, DC, March 2006.

3. Industrial Hygiene Manual. Manual 4Q, Savannah River Nuclear Solutions, Aiken, SC.

4. Management Policies. 1-01, Savannah River Nuclear Solutions, Aiken, SC.

5. Analytical Laboratories CLAB Multi-Group Procedures. Manual L2-1, Savannah River Nuclear Solutions, Aiken, SC.

6. Deleted

7. Industrial Hygiene Survey Procedures. Manual 4Q1.1, Savannah River Nuclear Solutions, Aiken, SC.

8. Analytical Laboratories Standard Practices. Manual L2, Savannah River Nuclear Solutions, Aiken, SC.

9. Deleted

10. Labor. Code of Federal Regulations, 29 CFR, Part 1910.1200, Appendix B, U.S. Government Printing Office, Washington, DC.

11. Conduct of Operations Manual. Manual 2S, Savannah River Nuclear Solutions, Aiken, SC.

12. Central Laboratory Facility Building 772-1F. WSRC-TR-94-0115, Hazards Assessment Document DOE-STD-1027-92 Review, Westinghouse Savannah River Company, Aiken, SC, June 1994.

13. Buildings 772-F and 772-4F of the Central Laboratory Facility. WSRC-TR-94-0114, Hazards Assessment Document DOE-STD-1027-92 Review, Westinghouse Savannah River Company, Aiken, SC, June 1994.

14. Industrial Hygiene Instruments. Manual 4Q1.2, Savannah River Nuclear Solutions, Aiken, SC.

WSRC-SA-96-26
REV. 8

CENTRAL LABORATORY FACILITY -
BUILDINGS 772-F, 772-1F, AND 772-4F
SAFETY ANALYSIS REPORT

CHAPTER 9

RADIOACTIVE AND HAZARDOUS WASTE MANAGEMENT

May 2010

Savannah River
Nuclear Solutions, LLC
A Fluor Daniel Partnership

DISCLAIMER

This document was prepared by Savannah River Nuclear Solutions LLC (SRNS), under contract with the United States Department of Energy (DOE).

Release to and Use by Third Parties. As it pertains to releases of this document to third parties, and the use of or reference to this document by such third parties in whole or in part, neither SRNS, DOE, nor their respective officers, directors, employees, agents, consultants or personal services contractors (i) make any warranty, expressed or implied, (ii) assume any legal liability or responsibility for the accuracy, completeness, or usefulness, of any information, apparatus, product or process disclosed herein or (iii) represent that use of the same will not infringe privately owned rights. Reference herein to any specific commercial product, process, or service by trademark, name, manufacture or otherwise, does not necessarily constitute or imply endorsement, recommendation, or favoring of the same by SRNS, DOE or their respective officers, directors, employees, agents, consultants or personal services contractors. The views and opinions of the authors expressed herein do not necessarily state or reflect those of the United States Government or any agency thereof.

CONTENTS

Page

9.0 RADIOACTIVE AND HAZARDOUS WASTE MANAGEMENT 9.1-1

9.1 INTRODUCTION 9.1-1

9.1.1 Objective 9.1-1

9.1.2 Scope 9.1-1

9.2 REQUIREMENTS 9.2-1

9.3 RADIOACTIVE, MIXED, AND HAZARDOUS WASTE MANAGEMENT PROGRAM AND ORGANIZATION 9.3-1

9.3.1 Environmental Services Section 9.3-1

9.3.2 Office of General Counsel 9.3-1

9.3.3 Radiological Protection Servicing 9.3-1

9.3.4 Transportation Department 9.3-2

9.3.5 Division-Level Quality Assurance Department 9.3-3

9.3.6 Solid Waste management facilities 9.3-3

9.3.7 Solid Waste Engineering 9.3-3

9.3.8 Solid Waste Operations 9.3-3

9.3.9 Solid Waste Maintenance 9.3-3

9.3.10 liquid management 9.3-3

9.3.11 Analytical Laboratories Organization 9.3-3

9.3.12 Generator Certification Official 9.3-4

9.4 RADIOACTIVE, MIXED, AND HAZARDOUS WASTE STREAMS AND SOURCES 9.4-1

CONTENTS (Continued)

Page

9.4.1 Waste Management Process 9.4-1

9.4.1.1 Radioactive Solid Waste Management 9.4-1

9.4.1.2 Radioactive Liquid Management 9.4-2

9.4.1.3 Radioactive Gaseous/Airborne Particulate Management 9.4-3

9.4.1.4 Mixed Solid Waste Management 9.4-4

9.4.1.5 Mixed Liquid Waste Management 9.4-5

9.4.1.6 Mixed Gaseous/Airborne Particulate Management 9.4-5

9.4.1.7 Hazardous Solid Waste Management 9.4-6

9.4.1.8 Hazardous Liquid Waste Management 9.4-6

9.4.1.9 Hazardous Gaseous/Airborne Particulate Management 9.4-7

9.4.2 Waste Sources and Characteristics 9.4-7

9.4.2.1 Radioactive Solid Waste Sources and Characteristics 9.4-7

9.4.2.2 Radioactive Liquid Sources and Characteristics 9.4-8

9.4.2.3 Radioactive Gaseous/Airborne Particulate Sources and Characteristics 9.4-8

9.4.2.4 Mixed Solid Waste Sources and Characteristics 9.4-9

9.4.2.5 Mixed Liquid Waste Sources and Characteristics 9.4-9

9.4.2.6 Mixed Gaseous/Airborne Particulate Sources and Characteristics 9.4-10

CONTENTS (Continued)

Page

9.4.2.7 Hazardous Solid Waste Sources and Characteristics 9.4-10

9.4.2.8 Hazardous Liquid Waste Sources and Characteristics 9.4-10

9.4.2.9 Hazardous Gaseous/Airborne Particulate Management 9.4-10

9.4.3 Waste Handling 9.4-10

9.4.3.1 Radioactive Solid Waste Handling 9.4-10

9.4.3.2 Radioactive Liquid Handling 9.4-11

9.4.3.3 Radioactive Gaseous/Airborne Particulate Waste Handling 9.4-11

9.4.3.4 Mixed Solid Waste Handling 9.4-12

9.4.3.5 Mixed Liquid Waste Handling 9.4-12

9.4.3.6 Mixed Gaseous/Airborne Particulate Waste Handling 9.4-12

9.4.3.7 Hazardous Solid Waste Handling 9.4-12

9.4.3.8 Hazardous Liquid Waste Handling 9.4-13

9.4.3.9 Hazardous Gaseous/Airborne Particulate Waste Handling 9.4-13

9.5 REFERENCES 9.5-1

ACRONYMS AND ABBREVIATIONS

ALARA	As Low As Reasonably Achievable
CFR	Code of Federal Regulations
DOE	Department of Energy
ETP	Effluent Treatment Plant
ESS	Environmental Services Section
F/H Lab	F/H Area Laboratory
GCO	Generator Certification Official
HAD	High-Activity Drain
HEPA	High-Efficiency Particulate Air
LAD	Low-Activity Drain
NESHAP	National Emission Standards for Hazardous Air Pollutants
NMM	Nuclear Materials Management
nCi/g	nanocuries per gram
OSA	Onsite Safety Assessment
SAR	Safety Analysis Report
SRNL	Savannah River National Laboratory
SRNS	Savannah River Nuclear Solutions
TSD	Treatment, Storage, or Disposal
TRU	transuranic
USQE	Unreviewed Safety Question Evaluation
WAC	Waste Acceptance Criteria
WSRC	Washington Savannah River Company

9.0 RADIOACTIVE AND HAZARDOUS WASTE MANAGEMENT

9.1 INTRODUCTION

9.1.1 OBJECTIVE

This chapter provides information that satisfies the requirements of Title 10 Code of Federal Regulations (CFR) 830 Nuclear Safety Management, as amplified in DOE-STD-3009, as applied to the F/H Area Laboratory (F/H Lab) (Buildings 772-F, 772-1F, and 772-4F) at the Savannah River Site (SRS) (Ref. 1, 6).

This chapter describes radioactive and hazardous waste management at the F/H Lab. The management of radioactive and hazardous waste is identical for Buildings 772-F and 772-1F.

9.1.2 SCOPE

This chapter describes the provisions for radioactive and hazardous waste management. The products of this chapter are as follows:

- A description of the overall radioactive and hazardous waste management program and organization
- A description of the radioactive, mixed, and hazardous waste management policy, objectives, and philosophy
- An identification of the radioactive and hazardous waste streams, including types, sources, and quantities
- A description of the waste management process and disposal system, including design and administrative controls

9.2 REQUIREMENTS

The Savannah River Nuclear Solutions (SRNS) radioactive and hazardous waste management program complies with various federal, state, and SRNS requirements. SRNS 1-01 Management Policies and Manuals 1B and 3Q specify codes, standards, regulations, and DOE Orders, as well as other site documents that govern the radioactive, mixed, and hazardous waste management program policies and program elements addressed in this chapter (Ref. 2, 3, 4).

DOE directives applicable to radioactive and hazardous waste management at the F/H Lab include DOE Orders 5400.1, 450.1, 440.1, 460.1, 420.1B, 225.1, 414.1A, and 435.1 (Ref. 5, 7-14).

The South Carolina hazardous waste management regulations are the state regulations that apply to radioactive, mixed, and hazardous waste management at the F/H Lab (Ref. 15).

Program requirements are generally controlled at the site level with appropriate input from subject matter experts including facility staff and management. Program requirements are typically adjusted based upon changes to federal and state regulations, DOE Orders, DOE guidance, and/or SRNS site-level programs. The authorization basis is maintained by continued compliance with site-level programs, including systematic implementation of changes to the programs as outlined above. The information provided in this chapter is descriptive of current practices.

9.3 RADIOACTIVE, MIXED, AND HAZARDOUS WASTE MANAGEMENT PROGRAM AND ORGANIZATION

It is the policy of SRNS to operate and maintain all facilities at SRS, which include the F/H Lab, in compliance with applicable laws, regulations, and DOE directives for protection of the environment and the safety and health of personnel (Ref. 2).

SRNS site policies governing the management of radioactive, mixed, and hazardous wastes include the following (Ref. 2):

- Managing all facilities and activities in a cost-effective and environmentally responsible manner, minimizing the generation of all types of wastes, and continually striving to reduce the quantity or toxicity of waste
- Designing, constructing, and operating new facilities in a manner that ensures the exposure of individuals and population groups to radioactive and other hazardous materials is as low as reasonably achievable
- Identifying and characterizing all waste streams with sufficient accuracy to ensure regulatory compliance and to allow proper waste minimization, segregation, treatment, storage, and disposal

The organizational responsibilities and interfaces associated with radioactive, mixed, and hazardous waste management at the F/H Lab are defined in Manuals 3Q and 1S (Ref. 4, 17). Chapter 17 of this Safety Analysis Report (SAR) provides additional organizational information.

9.3.1 ENVIRONMENTAL SERVICES SECTION

The Environmental Services Section (ESS) is the SRNS support group responsible for providing oversight to the SRNS environmental program. The ESS represents SRNS, in conjunction with the Office of General Counsel, on behalf of DOE when interacting with federal, state, and local agencies regarding environmental compliance and permits.

9.3.2 OFFICE OF GENERAL COUNSEL

The Office of General Counsel is the SRNS support group that provides legal and regulatory interpretation and review of documents generated in the permitting process. The Office of General Counsel interfaces with regulators concerning legal issues.

9.3.3 RADIOLOGICAL PROTECTION SERVICING

Radiological Protection Servicing is responsible for ensuring that radioactive materials shipped onsite meet the requirements of Manual 5Q (Ref. 18). Manual 5Q describes the radiological protection program at SRS as specified in DOE Order 440.1 (Ref. 8).

9.3.4 TRANSPORTATION DEPARTMENT

The Transportation Department is responsible for ensuring that waste is transported in a manner that protects operating personnel and prevents the release of radioactive or chemical contamination in accordance with Manual 19Q (Ref. 20).

DOE Order 460.1B, Packaging and Transportation Safety, provides the requirements to ensure the safe packaging and transportation of hazardous (including radioactive) materials on SRS. The packaging and transportation requirements are generically broken down into inter–area (e.g., F–Area to H–Area) transfers and intra–area movement requirements. To ensure compliance with the packaging and transportation requirements, F/H Lab complies with the requirements contained in the Transportation Safety Manual 19Q (Ref. 20) for all onsite transfers or movements (defined as onsite transport between facilities or areas on SRS using roads within the site bounds) and offsite movements of hazardous or radioactive material. Movements of hazardous or radioactive material within the area covered by the facility SB which is not controlled through a 19Q approved package or transfer is evaluated against the facility SB.

The facility Radioactive and Hazardous Materials Shipping and Receiving Program, as specified in the Transportation Safety Manual 19Q (Ref. 20) ensures the following for offsite shipments and onsite transfers:

- Complete documentation
- Implementation and compliance with federal and state agency requirements
- Compliance with federal and state requirements by preshipment verification
- Assurance that designated cognizant personnel are trained in radioactive and hazardous material shipping and receiving.
- Retention of programmatic and shipment records in accordance with SRS quality assurance and records management directives.

For inter–area transfers of hazardous and radioactive material, the 19Q Manual (Ref. 20) requires a safety assessment be completed. The safety analysis, an Onsite Safety Assessment (OSA), is completed by the Radioactive Material Packaging and Transportation Group in the Savannah River National Laboratory (SRNL) per the requirements in the E7 Manual (Ref. 33). The OSA establishes the controls and requirements for using a specific packaging or container for transferring the materials.

For intra–area movements, either a certified or approved package must be used for the movement or the potential accidents and consequences have to be bounded by or included in the accident analysis for either the shipping or the receiving facility. For intra–area movements (e.g., within the area fence line), an OSA is not required if the potential accident consequences are bounded by the shipping or receiving facility accident analyses. An Unreviewed Safety Question Evaluation (USQE) must be completed to show that the radioactive material movement consequences are within the analyzed accident conditions. Additional controls, evaluations, or analyses are not required when using DOT or OSA analyzed packages or containers for intra–area movements.

9.3.5 DIVISION-LEVEL QUALITY ASSURANCE DEPARTMENT

The Division-Level Quality Assurance Department is responsible for performing audits or assessments, as needed, of the waste generator's quality assurance program associated with waste certification.

9.3.6 SOLID WASTE MANAGEMENT FACILITIES

The Solid Waste Management Facility is responsible for managing the overall solid waste program at SRS. Duties include the management of facilities in accordance with applicable laws, regulations, DOE Orders, directives, and permits for the protection of the public and the environment.

9.3.7 SOLID WASTE ENGINEERING

Solid Waste Engineering is responsible for developing, maintaining, reviewing, and revising waste stream acceptance criteria and for ensuring that procedures comply with DOE Orders and state regulations.

9.3.8 SOLID WASTE OPERATIONS

Solid Waste Operations is responsible for accepting, treating, storing, and disposing of all SRS-generated radioactive and hazardous waste.

9.3.9 SOLID WASTE MAINTENANCE

Solid Waste Maintenance is responsible for operating the vehicles and equipment that are used in transporting, storing, or disposing of waste within the SRS solid waste management facilities.

9.3.10 LIQUID MANAGEMENT

Low activity radioactive liquid waste generated by F/H Lab is transferred through a process sewer to the Effluent Treatment Project. High activity radioactive sample returns generated by F/H Lab are transferred to an LR-56S for transfer to H-Area.

9.3.11 ANALYTICAL LABORATORIES ORGANIZATION

Chapter 17 of this SAR presents the SRS and Analytical Laboratories organization, which includes the F/H Lab organization.

9.3.12 GENERATOR CERTIFICATION OFFICIAL

The Generator Certification Official (GCO) and designated alternates are the agents of the F/H Lab Facility Manager. The GCO and designated alternates exercise signature authority on solid waste documentation required to certify compliance with acceptance criteria specified in Manual 1S (Ref. 17).

The GCO and designated alternates are responsible for the following activities:

- Verifying and certifying the contents of the waste
- Administering the waste certification program
- Ensuring that waste management programs implement and document controls that meet applicable Waste Acceptance Criteria (WAC) in accordance with Manual 1S
- Stopping shipment of nonconforming waste

9.4 RADIOACTIVE, MIXED, AND HAZARDOUS WASTE STREAMS AND SOURCES

This section summarizes the waste management process; waste sources and characteristics for solid, liquid, and gaseous effluents; and waste handling systems. No permanent waste storage areas are located within any of the buildings. Waste is stored in temporary collection areas until it is shipped to treatment facilities or permanent disposal facilities.

9.4.1 WASTE MANAGEMENT PROCESS

The three types of waste generated in the F/H Lab are radioactive, mixed, and hazardous waste. Each type consists of three potential forms of waste: solid, liquid, and gaseous/airborne particulate forms. Nonradioactive and nonhazardous wastes are not within the scope of this chapter; these wastes are addressed in Chapter 2 of this SAR.

This section summarizes the main administrative and operational waste management controls for the three types of waste in their various forms.

9.4.1.1 Radioactive Solid Waste Management

The F/H Lab waste certification and characterization plans provides requirements for reducing, to the lowest possible levels, the generation of solid radioactive waste commensurate with system designs and laboratory operations (Ref. 21, 22).

ADMINISTRATIVE PRACTICES

The management of radioactive solid waste is controlled through the use of administrative limits designed to ensure personnel safety as well as proper solid waste handling and disposal. Administrative limits are effected through the use of procedures specified in formal policies and programs as follows:

- The F/H Lab waste certification and characterization plans provide requirements for reducing, to the lowest possible levels, the generation of solid radioactive waste commensurate with system designs and laboratory operations (Ref. 21, 22). These reports are periodically updated and supersede the older versions referenced herein.
- DOE Order 435.1 requires that all radioactive waste generated onsite be characterized and segregated and that each generator develop a waste certification program (Ref. 14). Waste certification ensures that radioactive solid waste is properly identified, characterized, segregated, packaged, and shipped according to the WAC of the receiving facility.
- The WAC 3.0 Series of Manual 1S describes criteria and responsibilities for the acceptance, recording, movement, tracking, and temporary storage of radioactive solid waste at SRS (Ref. 17).
- Nuclear criticality controls are used and maintained.

- Manual 5Q and the SRS As Low As Reasonably Achievable (ALARA) Manual describe provisions for minimizing occupational radiation exposure when handling radioactive materials (Ref. 18, 23).

Transuranic (TRU) and low-activity radioactive solid wastes are administratively managed in accordance with Manual L2-1 (Ref. 24). Section 9.4.3 describes the handling of TRU and low-activity radioactive solid wastes.

OPERATIONAL PRACTICES

Management Policy 4.1 of Manual 1-01 establishes waste reduction philosophies and responsibilities (Ref. 2). SRNS established an operational framework to support and implement a waste reduction program. Operational practices are effected through the use of procedures specified in formal policies and programs as follows:

- Radioactive solid waste operations in the F/H Lab comply with the waste reduction program delineated in Manual 3Q (Ref. 4).
- The F/H Lab waste certification program is controlled by Manual L2 (Ref. 26).
- Personnel from the F/H Lab and from Treatment, Storage, or Disposal (TSD) facilities document and track radioactive waste shipped from the F/H Lab to its ultimate storage, disposal, or treatment location as prescribed by the waste management program. Currently, the system used to document this information is an automated sitewide database. Information related to waste characterization, such as volume, isotopic quantity, and contaminants, is documented by F/H Lab personnel.

9.4.1.2 Radioactive Liquid Management

ADMINISTRATIVE PRACTICES

The following administrative practices are implemented at the F/H Lab for handling radioactive liquids:

- Manual L2-1 provides the administrative controls for handling radioactive liquid disposals and recoverable radioactive liquids that are returned to the customer (Ref. 24). Recoverable radioactive liquids are not considered as waste material at the F/H Lab.
- Manual L2-1 administratively controls and tracks the amount of nuclear materials, as well as fissile material, contained in radioactive liquids that accumulate in the High-Activity Drain (HAD) tank from samples, standards, and related analytical solutions. Manual L2-1 includes worksheets used by laboratory personnel for recording and tracking transfers of radioactive liquids. These radioactive liquids undergo further processing at other facilities.
- Manual 19Q (Ref. 20) administratively controls the transfer of Sample returns from the High-Activity Drain (HAD) via the LR-56S to H Area.

OPERATIONAL PRACTICES

The following operational practices are implemented at the F/H Lab for handling radioactive liquids:

- The F/H Lab analyzes liquid samples drawn from separations processes at the canyon, from waste management facilities, and from Spent Fuel Storage facilities. Unused or recoverable liquid samples are returned to the customer. Consumed samples and used radioactive liquids are collected and temporarily placed in the HAD tank. Liquids from decontamination activities and from laboratory sink drains, floor drains, and eyewash station drains are collected and temporarily placed in the Low-Activity Drain (LAD) tanks. The HAD tanks' radioactive liquids undergo further processing in H-Area. The LAD tanks' liquids are sent to the Effluent Treatment Project.
- Chapter 2 of this SAR describes the various components of the HAD and LAD systems. Chapter 2 also describes the HAD and LAD systems, the transfer operations, and the coordination between facilities.
- The exhaust fans for the HAD and LAD systems, including system vacuum indicators, are required to be operating for worker safety.
- Routine monitoring and surveillance of radioactive liquid disposals and shipment of recoverable radioactive liquids are performed to ensure compliance with administrative policies and controls.

9.4.1.3 Radioactive Gaseous/Airborne Particulate Management

ADMINISTRATIVE PRACTICES

Radiological and Chemical effluents released from F/H Lab to the environment by way of the stacks are documented on an annual basis though the annual air emission inventory process.

Trace amounts of radioactive airborne particulates are exhausted from the laboratories, the gloveboxes, and areas where radioactive materials are handled. As discussed in Chapter 2 of this SAR, radioactive airborne particulates are filtered by prefilters and High-Efficiency Particulate Air (HEPA) filters installed in the main exhaust and offgas exhaust systems. These filters are administratively regulated by procedures contained in Manual L4.02 (Ref. 28).

The following administrative practices are implemented at the F/H Lab for handling radioactive airborne particulates:

- DOE Order 435.1 provides the guidelines for atmospheric radioactivity releases that are not to be exceeded by the F/H Lab when discharging filtered exhaust air from all areas where radioactive materials are handled (Ref. 14). The guidelines provided in DOE Order 435.1 apply to concentrations at the site boundary.
- The main exhaust and offgas exhaust systems are operated to meet annual radioactivity release guidelines established by SRNS. These administrative guidelines are more restrictive than federal and state requirements and reflect an ongoing commitment by

SRNS management to reduce releases to the lowest practical level that is consistent with operating experience. SRS releases are so small that concentrations of radionuclides of SRS origin at the site boundary represent a small fraction of the DOE guidelines. Furthermore, the contribution of emissions from the F/H Lab constitutes a small portion of all SRS releases.

Manual L4.02 provides administrative instructions for responding to process upset conditions that can result in undesired environmental impact from stack releases exhibiting high beta/gamma and/or alpha activity.

OPERATIONAL PRACTICES

The following operational practices are implemented at the F/H Lab for handling radioactive airborne particulates:

- Airborne effluents from the F/H Lab are monitored for radioactivity at all times. The quantity and concentration of radioactivity released from the main exhaust system through the stacks dictate the operational actions required of F/H Lab personnel and the default conditions for process systems and equipment configuration. Proceduralized operational actions are required to preclude exceeding SRNS and federal emission guidelines. Section 9.4.3.3 addresses the disposal of regulated filters.
- As discussed in Chapter 2 of this SAR, proper operation of the Building 772-F offgas exhaust system requires that the HEPA filters in 772-4F be operable. The Building 772-1F offgas exhaust system requires that the main exhaust system in Building 772-1F be operable.

9.4.1.4 Mixed Solid Waste Management

ADMINISTRATIVE PRACTICES

The following administrative practices are implemented at the F/H Lab for handling mixed solid waste:

- Manual 1S identifies the administrative practices for managing radioactive mixed solid waste (Ref. 17).
- Waste identified as mixed waste is segregated and administratively controlled in satellite accumulation areas (or staging areas) in accordance with the requirements of Manuals 3Q and 1S (Ref. 4, 17).
- Site-level procedures and controls provide the administrative standards and guidelines for establishing, maintaining, and inspecting mixed waste satellite or staging areas to ensure that mixed waste is stored in accordance with federal and state regulations.
- The F/H Lab Waste Certification Plan describes the need for substituting alternate materials and provides administrative guidelines to minimize the generation of mixed

waste (Ref. 21). Manual L2-1 addresses the administrative requirements for chemical product control (Ref. 24).

OPERATIONAL PRACTICES

The following documents identify the operational practices implemented at the F/H Lab for handling mixed solid waste:

- Manual L2-1 (Ref. 24)
- Manual L2 (Ref. 26)

Mixed solid waste generated at the F/H Lab is managed in satellite, or staging, areas in accordance with Manuals 3Q and 1S (Ref. 4, 17).

9.4.1.5 Mixed Liquid Waste Management

The F/H Lab Waste Certification Plan describes the need for substituting alternate materials and provides administrative guidelines to minimize the generation of mixed waste (Ref. 21).

ADMINISTRATIVE PRACTICES

The following administrative practices are implemented at the F/H Lab for handling mixed liquid waste:

- Mixed liquid wastes generated at the F/H Lab are primarily reagents that are used in analytical measurements. Manual L2 provides the administrative requirements for chemical product control (Ref. 26).
- The F/H Lab Waste Certification Plan describes the need for substituting alternate materials and provides administrative guidelines to minimize the generation of mixed waste (Ref. 21).

OPERATIONAL PRACTICES

The F/H Lab uses operational practices for handling mixed liquid waste. Commercial chemical liquid products handled inside contamination areas are assumed to be contaminated with radionuclides unless demonstrated to be free of radioactivity. Any mixed liquid waste generated at the F/H Lab is segregated and managed in satellite areas in accordance with Manuals 3Q and 1S (Ref. 4, 17).

9.4.1.6 Mixed Gaseous/Airborne Particulate Management

No significant mixed gaseous or airborne particulate waste is generated or released from the F/H Lab.

9.4.1.7 Hazardous Solid Waste Management

ADMINISTRATIVE PRACTICES

The following administrative practices are implemented at the F/H Lab for handling hazardous solid waste:

- Manual 1S identifies the administrative practices for managing nonradioactive hazardous solid waste (Ref. 17).
- Waste identified as hazardous is segregated and administratively controlled in satellite accumulation areas (or staging areas) in accordance with the requirements of Manuals 3Q and 1S (Ref. 4, 17).
- Site-level procedures and controls provide the administrative standards and guidelines for establishing, maintaining, and inspecting hazardous waste satellite areas to ensure that hazardous waste is stored in accordance with federal and state regulations.

OPERATIONAL PRACTICES

The following documents identify the operational practices implemented at the F/H Lab for handling hazardous solid waste:

- Manual L2-1 (Ref. 24)
- Manual L2 (Ref. 26)

9.4.1.8 Hazardous Liquid Waste Management

ADMINISTRATIVE PRACTICES

The following administrative practices are implemented at the F/H Lab for handling hazardous liquid waste:

- Hazardous liquid wastes are occasionally generated at the F/H Lab. Manual 1S identifies the administrative requirements for managing nonradioactive hazardous liquid waste (Ref. 17).

OPERATIONAL PRACTICES

The F/H Lab uses operational practices for handling hazardous liquid waste. Hazardous liquid waste generated at the F/H Lab is segregated and managed in satellite areas in accordance with Manuals 3Q and 1S (Ref. 4, 17).

9.4.1.9 Hazardous Gaseous/Airborne Particulate Management

No significant hazardous gaseous or airborne particulate waste is generated or released from the F/H Lab.

9.4.2 WASTE SOURCES AND CHARACTERISTICS

This section summarizes how and where the waste is generated (i.e., waste streams) and how it enters the appropriate waste handling system. The waste characterization process identifies and segregates waste according to the waste streams shown in Manual 1S (Ref. 17, 21). Chapter 3 of this SAR documents the radionuclides and chemical inventories in the F/H Lab.

9.4.2.1 Radioactive Solid Waste Sources and Characteristics

Radioactive solid waste generated in the F/H Lab can be either routine or nonroutine waste. Routine radioactive solid waste is waste material produced from daily F/H Lab operations. This type of waste includes paper, cloth, glass, rubber, and plastic materials. These materials are in the form of typical laboratory items such as the following (Ref. 21):

- Gloves and gloveliners
- Polyethylene bottles
- Glass vials
- Paper sheets and labels
- Paper towels
- Plastic tubing and rubber hoses
- Protective clothing
- Plastic medicine droppers

Radioactive solid waste is packaged and controlled according to F/H Lab procedures identified in Section 9.4.3.

Nonroutine solid waste is reviewed by the F/H Lab GCO before disposal to ensure compliance with disposal acceptance criteria. Nonroutine solid waste that does not meet certified disposal acceptance criteria may require a certification process for a new waste stream prior to disposal. The new certification process requires the determination of physical properties, chemical characteristics, and radiological constituents. A new waste stream must be approved by the TSD facilities (Ref. 17, 26). Nonroutine radioactive solid waste is generated by activities that are not normally part of regular and usual laboratory operations. Nonroutine radioactive solid waste can be generated at the F/H Lab from any of the following:

- System and equipment modifications
- Decommissioning operations
- Demolition

- Dismantling of obsolete and old equipment, which may include HEPA filters, radiohoods and radiobenches, motors, and ductwork

The following sections describe the categories of routine radioactive solid wastes generated at the F/H Lab and their typical sources.

LOW-LEVEL BETA-GAMMA WASTE

Low-level beta-gamma solid waste is collected from locations such as radiohoods and radiobenches, laboratory modules, shielded cells, and other contamination areas. This waste contains radioactive material not classified as high-level waste, spent nuclear fuel, TRU waste, or byproduct material as defined in DOE Order 435.1 and contains less than 100 nanocuries per gram (nCi/g) TRU (Ref. 14).

TRANSURANIC WASTE

TRU solid waste contains 100 nCi/g TRU radionuclides or greater and is collected primarily from gloveboxes and designated radiobenches and radiohoods.

COMPACTABLE WASTE

The majority of low-level radioactive solid waste generated in the F/H Lab is job-related, heterogeneous waste. Waste generated in the laboratory modules, but outside the containment units, is considered potentially contaminated (maintained at less than 200 disintegrations per minute, 100 square centimeter alpha activity).

9.4.2.2 Radioactive Liquid Sources and Characteristics

Radioactive liquid samples are diluted or used in conjunction with other liquids, such as acids and demineralized water that produce liquid sample returns resulting from laboratory analyses. These liquid sample returns are generated in containment units, shielded cells, sample preparation areas, laboratory work tables, and analytical equipment such as spectrophotometers and coulometers, and generally are not returned to the customer. They normally contain low levels of radioactivity and are transferred to the HAD system. High- and low-activity recoverable liquids are those not used or consumed in laboratory analyses. Excess or unused liquids containing significant concentrations of uranium and TRU materials are returned to the customer as recoverable material (i.e., appropriate for direct reintroduction of the material into the source H-Area Material Disposition process for eventual stabilization).

9.4.2.3 Radioactive Gaseous/Airborne Particulate Sources and Characteristics

At present, no significant radioactive gaseous effluents are generated at the F/H Lab. However, low levels of tritium may be generated and released, from some laboratories (e.g., water quality laboratory and industrial hygiene laboratory). After National Emission Standards for Hazardous

Air Pollutants (NESHAPs) reviews were completed by ESS, the quantity of tritium released was found to require no stack monitoring. The only requirement is an annual calculated estimate of released tritium.

The following sources of radioactive airborne particulates are contained in exhaust air from the F/H Lab as identified in Chapter 2 of this SAR:

- Gloveboxes
- Radiobenches and radiohoods
- Shielded cells
- Decontamination hoods
- Shielded areas A, B, and C
- HAD and LAD systems
- Radioactive emissions from the LR56S are calculated on an annual basis

Radioactive airborne particulates accumulated by the prefilters and HEPA filters in the F/H Lab are considered radioactive solid waste as identified in Section 9.4.2.1. Potential radioactive airborne particulates from the gloveboxes located in Building 772-F are discharged to 772-4F main exhaust system. Potential radioactive airborne particulates from the gloveboxes located in Building 772-1F are discharged to the Building 772-1F main exhaust system. The filters in these exhaust systems are administratively regulated by procedures contained in Manual L4.02 (Ref. 28).

With the exception of the shielded areas in Building 772-F and the HEPA filter enclosures in Buildings 772-1F and 772-4F, none of the areas in the F/H Lab routinely contain radioactive airborne particulates. Nonetheless, all contamination areas and radiation areas located in the building are filtered as potential sources of contamination, through the main exhaust system, as protection against the possibility of any airborne contamination releases to the environment.

9.4.2.4 Mixed Solid Waste Sources and Characteristics

Materials generated inside contamination areas and radiation areas that are classified as hazardous and radioactive solid waste are considered to be mixed waste. Contaminated lead shielding components that can not be reused are considered mixed solid waste. Mixed waste is packaged and controlled according to F/H Lab documents identified in Section 9.4.3.

9.4.2.5 Mixed Liquid Waste Sources and Characteristics

Liquid material at F/H Lab is typically managed in the HAD and LAD systems. HAD effluent is composed of sample return material that is received back to H Canyon. As sample returns, this material does not meet the definition of solid waste, as defined by the Resource Conservation and Recovery Act. The LAD is a permitted system for transfer of waste to Effluent Treatment Project (ETP). Listed-mixed liquid waste is not routinely generated at the F/H Lab. The small

quantities of this type of waste, which are generated, are controlled in satellite accumulation areas in the same manner as described in Section 9.4.2.8.

9.4.2.6 Mixed Gaseous/Airborne Particulate Sources and Characteristics

No significant mixed gaseous or airborne particulate waste is generated or released from the F/H Lab. The bulk of any hazardous materials handled are disposed of via solid/liquid waste routes. Any airborne material (gaseous or particulate) would be expected to be "de minimus" quantities since only very small quantities (0.1% or less) could become airborne due to evaporation.

9.4.2.7 Hazardous Solid Waste Sources and Characteristics

Commercially manufactured solid chemical products are used in the F/H Lab for analyses. Unused or unusable commercial solid chemicals may be considered hazardous solid waste. Hazardous solid waste is packaged and controlled according to F/H Lab documents identified in Section 9.4.3.

9.4.2.8 Hazardous Liquid Waste Sources and Characteristics

Commercially manufactured liquid chemical products are used in the F/H Lab for analyses and cleaning. Hazardous liquid waste is managed according to F/H Lab documents identified in Section 9.4.3.

9.4.2.9 Hazardous Gaseous/Airborne Particulate Management

No significant hazardous gaseous or airborne particulate waste is generated or released from the F/H Lab. The bulk of any hazardous materials handled are disposed of via solid/liquid material routes. Any airborne material (gaseous or particulate) would be expected to be "de minimus" quantities since only very small quantities (0.1% or less) could become airborne due to evaporation.

9.4.3 WASTE HANDLING

This section summarizes the processes for handling different waste types and forms produced in the F/H Lab. The F/H Lab does not contain permitted facilities for the treatment of waste.

9.4.3.1 Radioactive Solid Waste Handling

The handling, packaging, and temporary storage of radioactive solid wastes in the F/H Lab are primarily manual activities controlled by procedures. Radioactive solid waste disposal usually involves packaging the waste in boxes and drums and temporarily storing it at collection points followed by shipment to waste management facilities for disposal or storage. Radioactive solid waste is not permanently stored in the F/H Lab. Staging points are designated locations where

packaged waste can be temporarily accumulated until it is collected for transport to designated TSD facilities.

Special handling considerations of radioactive solid waste handling, packaging, and staging in the F/H Lab include the following:

- Employing standard worker safety and radiological practices
- Surveying waste containers and collection areas for radiation and contamination levels

The handling of radioactive waste, including waste identification, segregation, packaging, certification, labeling, interim staging, and shipping, is addressed in the following documents:

- Manual 1S (Ref. 17)
- Manual L2-1 (Ref. 24)
- F/H Lab Waste Certification/Characterization Plan (Ref. 21).
- Manual 5Q1.4 (Ref. 32)

All radioactive solid waste will be removed from the F/H Lab prior to commencement of decommissioning activities.

9.4.3.2 Radioactive Liquid Handling

Manual L2-1 addresses the transfer of radioactive liquids from the work areas to the liquid management systems (i.e., HAD and LAD) (Ref. 24). High-activity liquids from HAD Tank F is transferred by pump to an LR-56S for transfer to H-Area. Chapter 2 of this SAR provides a description of the HAD tank liquid transfer system.

Manual L4.02 describes the action required when the HAD Tank System approaches the operating limit (Ref. 28).

Low-activity liquids from LAD tanks A and B are pumped through a process sewer to the Effluent Treatment Facility. Chapter 2 of this SAR provides a description of the LAD tank liquid transfer system. The LAD tanks contain trace levels of contamination and low levels of radioactivity. The F/H Lab complies with the radiological controls specified in Manual 5Q when operating the HAD and LAD systems (Ref. 18).

Radioactive recoverable liquids (i.e., unused and excess sample solutions) are returned to the customer in accordance with procedures contained in Manuals L2-1 and L2 (Ref. 24, 26).

9.4.3.3 Radioactive Gaseous/Airborne Particulate Waste Handling

At present, no significant gaseous effluents are released from the F/H Lab to the environment by way of the stacks. As stated in Section 9.4.1.3, selected process and waste management samples can contain microcurie quantities of tritiated water. A fraction of the tritiated water is released as vapor in normal analytical handling. Furthermore, low levels of tritium may be released to the

environment from operations in water quality and Industrial Hygiene Laboratories located in F/H Labs. After NESHAPs reviews were completed by ESS, the quantity of tritium released was found to require no stack monitoring. The only requirement is an annual calculated estimate of released tritium. The radiological material inventory controls include control of tritium curies.

Two systems handle airborne radioactive particulates from operations at the F/H Lab: the offgas exhaust system and the main exhaust system. Chapter 2 of this SAR describes these systems. Radioactive airborne particulates are removed from the exhaust systems by regulated prefilters and HEPA filters. The filters are removed, packaged, and disposed as B-25 waste in accordance with Manual L4.02 (Ref. 28).

9.4.3.4 Mixed Solid Waste Handling

The handling of mixed solid waste, including waste identification, segregation, packaging, certification, labeling, interim staging, and shipping, is addressed in the following documents:

- Manual 1S (Ref. 17)
- Manual 3Q (Ref. 4)
- Manual L2-1 (Ref. 24)
- Manual L2 (Ref. 26)
- Manual L4.02 (Ref. 28)
- F/H Area Laboratory Facility Low-Level & Mixed Waste Characterization Plan (Ref. 21)
- Manual 5Q1.4 (Ref. 32)

9.4.3.5 Mixed Liquid Waste Handling

Mixed liquid waste handling is described in Manual L2-1 (Ref. 24).

9.4.3.6 Mixed Gaseous/Airborne Particulate Waste Handling

No significant mixed gases or airborne particulate waste is generated or released from the F/H Lab.

9.4.3.7 Hazardous Solid Waste Handling

Any waste identified as hazardous is segregated and managed in satellite accumulation or staging areas as a separate waste stream in accordance with the following documents:

- Manual 1S (Ref. 17)
- Manual 3Q (Ref. 4)
- Manual L2-1 (Ref. 24)

9.4.3.8 Hazardous Liquid Waste Handling

Manual L2-1 describes the management of hazardous liquid waste (Ref. 24).

9.4.3.9 Hazardous Gaseous/Airborne Particulate Waste Handling

No significant hazardous gases or airborne particulate waste is generated or released from the F/H Lab.

9.5 REFERENCES

1. Nuclear Safety Management. Title 10 Energy, Code of Federal Regulations, Part 830, U.S. Department of Energy, Washington, DC, January 2006.

2. Management Policies. 1-01 Management Policies, Savannah River Nuclear Solutions, Aiken, SC.

3. Management Requirements and Procedures. Manual 1B, Savannah River Nuclear Solutions, Aiken, SC.

4. Environmental Compliance Manual. Manual 3Q, Savannah River Nuclear Solutions, Aiken, SC.

5. General Environmental Protection Program. DOE Order 5400.1, Change 1, U.S. Department of Energy, Washington, DC, June 1990.

6. Preparation Guide for US Department of Energy Nonreactor Nuclear Facility Safety Analysis Reports. DOE-STD-3009-94, CN3, U.S. Department of Energy, Washington, DC, March 2006.

7. Environment, Safety, and Health Policy for the Department of Energy Complex. DOE Order 450.1, U.S. Department of Energy, Washington, DC, June 1995.

8. Worker Protection Management for DOE Federal and Contractor Employees. DOE Order 440.1, U.S. Department of Energy, Washington, DC, July 1997.

9. Packaging and Transportation Safety. DOE Order 460.1, U.S. Department of Energy, Washington, DC, September 1995.

10. Facility Safety. DOE Order 420.1B, U.S. Department of Energy, Washington, DC, December 2005.

11. Deleted

12. Accident Investigations. DOE Order 225.1, U.S. Department of Energy, Washington, DC, April 1996.

13. Quality Assurance. DOE Order 414.1A, U.S. Department of Energy, Washington, DC, September 1999.

14. Radioactive Waste Management. DOE Order 435.1, U.S. Department of Energy, Washington, DC, July 1999.

15. South Carolina Hazardous Waste Management Regulations. South Carolina Department of Health and Environmental Control, Bureau of National Affairs, Inc., Columbia, SC, June 2006.

16. Deleted

17. Savannah River Site Waste Acceptance Criteria Manual. Manual 1S, Savannah River Nuclear Solutions, Aiken, SC.

18. Radiological Controls. Manual 5Q, Savannah River Nuclear Solutions, Aiken, SC.

19. Deleted

20. Transportation Safety Manual. Manual 19Q, Savannah River Nuclear Solutions, Aiken, SC.

21. F/H Area Laboratory Waste Certification/Characterization Plan, CBU-FHO-2003-00051, Rev. 5, Westinghouse Savannah River Company, Aiken, SC. January 2003.

22. F/H Area Laboratory Transuranic (TRU) Waste Certification/Characterization Plan, M&O-FHO-2008-00061, Rev. 0, Savannah River Nuclear Solutions, Aiken, SC. October 2008

23. Savannah River Site ALARA Manual. SCD-6, Savannah River Nuclear Solutions, Aiken, SC, September 2005.

24. Analytical Laboratories CLAB Multi-Group Procedures. Manual L2-1, Savannah River Nuclear Solutions, Aiken, SC.

25. Deleted

26. Analytical Laboratories Standard Practices. Manual L2, Savannah River Nuclear Solutions, Aiken, SC.

27. Deleted

28. Support Systems Procedures for F-Area Analytical Laboratories. Manual L4.02, Savannah River Nuclear Solutions, Aiken, SC.

29. Deleted

30. Deleted

31. Deleted

32. Safety and Health Department Water Monitoring Procedures. Manual 5Q1.4, Savannah River Nuclear Solutions, Aiken, SC.

33. Development of Onsite Safety Assessment for Radioactive Material Transfers. Manual E7 4.06, Savannah River Nuclear Solutions, Aiken, SC.

WSRC-SA-96-26
REV. 8

CENTRAL LABORATORY FACILITY -
BUILDINGS 772-F, 772-1F, AND 772-4F
SAFETY ANALYSIS REPORT

CHAPTER 10

INITIAL TESTING, IN-SERVICE SURVEILLANCE, AND MAINTENANCE

May 2010

Savannah River
Nuclear Solutions, LLC
A Fluor Daniel Partnership

DISCLAIMER

This document was prepared by Savannah River Nuclear Solutions LLC (SRNS), under contract with the United States Department of Energy (DOE).

Release to and Use by Third Parties. As it pertains to releases of this document to third parties, and the use of or reference to this document by such third parties in whole or in part, neither SRNS, DOE, nor their respective officers, directors, employees, agents, consultants or personal services contractors (i) make any warranty, expressed or implied, (ii) assume any legal liability or responsibility for the accuracy, completeness, or usefulness, of any information, apparatus, product or process disclosed herein or (iii) represent that use of the same will not infringe privately owned rights. Reference herein to any specific commercial product, process, or service by trademark, name, manufacture or otherwise, does not necessarily constitute or imply endorsement, recommendation, or favoring of the same by SRNS, DOE or their respective officers, directors, employees, agents, consultants or personal services contractors. The views and opinions of the authors expressed herein do not necessarily state or reflect those of the United States Government or any agency thereof.

CONTENTS

Page

10.0 INITIAL TESTING, IN-SERVICE SURVEILLANCE, AND MAINTENANCE 10.1-1

10.1 INTRODUCTION 10.1-1

10.1.1 Objective 10.1-1

10.1.2 Scope 10.1-1

10.2 REQUIREMENTS 10.2-1

10.3 INITIAL TESTING PROGRAM 10.3-1

10.3.1 Testing Of Modifications 10.3-1

10.3.1.1 Testing of Facility Modifications 10.3-1

10.3.1.2 Testing of Equipment Modifications 10.3-3

10.3.2 Adequacy of Testing Activities 10.3-4

10.4 IN-SERVICE SURVEILLANCE PROGRAM 10.4-1

10.4.1 Provisions for Testing and Calibrations 10.4-1

10.4.2 Control and Calibration of Test Equipment 10.4-2

10.4.3 Trending of Surveillance Test Results 10.4-2

10.4.4 Programmatic Review 10.4-2

10.4.5 Training of Surveillance Testing Personnel 10.4-2

10.5 MAINTENANCE PROGRAM 10.5-1

10.5.1 Maintenance Organization and Administration 10.5-1

10.5.2 Training and Qualification of Maintenance Personnel 10.5-1

CONTENTS (Continued)

Page

10.5.3 Maintenance Facilities, Equipment, and Tools..... 10.5-2

10.5.4 Post-Maintenance Testing..... 10.5-2

10.5.5 Control and Calibration of Measuring Equipment 10.5-3

10.5.6 Maintenance History and Trending 10.5-3

10.6 REFERENCES 10.6-1

ACRONYMS AND ABBREVIATIONS

CFR	Code of Federal Regulations
CR	Core Requirements
DOE	Department of Energy
DOE-SR	Department of Energy - Savannah River Operations Office
DSA	Documented Safety Analysis
F/H Lab	F/H Area Laboratory
FSSDM	Facility Support Services Division Maintenance
HEPA	High-Efficiency Particulate Air
IPS	Infrastructure and Project Support
ISD	Infrastructure and Services Department
M&TE	Measuring and Test Equipment
MCR	Minimum Core Requirement
OED	Operations Evaluation Department
ORR	Operational Readiness Review
RA	Readiness Assessment
RSA	Readiness Self-Assessment
SAR	Safety Analysis Report
SRNS	Savannah River Nuclear Solutions
SRS	Savannah River Site
SSC	Structure, System, and Component
TSR	Technical Safety Requirements
WSRC	Washington Savannah River Company

10.0 INITIAL TESTING, IN-SERVICE SURVEILLANCE, AND MAINTENANCE

10.1 INTRODUCTION

10.1.1 OBJECTIVE

This chapter demonstrates the commitment of the F/H Area Laboratory (F/H Lab) (Buildings 772-F, 772-1F, and 772-4F) to comply with the requirements in Title 10 Code of Federal Regulations (CFR) 830 Nuclear Safety Management (Ref. 1), as amplified in DOE-STD-3009 (Ref. 8). These requirements pertain to testing, surveillance, and maintenance policies and programs not described elsewhere in this Safety Analysis Report (SAR).

The objective of this chapter is to present information demonstrating that the following conditions exist:

- The operations organization is part of a network of policy and programs in terms of organizational structure and interfaces, management policy, initial testing, in-service surveillance, and maintenance of the F/H Lab.
- The network of programs is sufficient to ensure that the performed safety-related work meets the testing, surveillance, and maintenance requirements of the F/H Lab.
- The network of programs includes predictive, preventive, and corrective F/H Lab maintenance programs.

10.1.2 SCOPE

Chapter 10 of the Savannah River Site (SRS) Documented Safety Analysis (DSA) Support Document describes the initial testing, in-service surveillance, and maintenance programs for the SRS, including the following (Ref. 2):

- Requirements for these programs
- Site organizations that support these programs
- Responsibilities and relationships between these organizations
- Other pertinent sitewide information

This chapter of the SAR provides additional information that applies specifically to the F/H Lab and identifies the facility-specific, closure business unit-level, and site procedures that implement these programs.

The scope of this chapter is to provide descriptions of the following programs pertaining to the safety-related Structures, Systems, and Components (SSCs) (as determined by their functional classifications) found only in the F/H Lab:

- Initial (startup and restart) testing program
- In-service surveillance program
- Planned, periodic, preventive, and corrective maintenance programs

The F/H Lab buildings contain no Safety Class SSCs, and only passive Safety Significant SSCs. The Safety Significant SSCs are identified in Chapters 3 and 4 of this SAR.

10.2 REQUIREMENTS

Section 10.2 of the SRS DSA Support Document identifies the Standards/Requirements Identification Documents (S/RIDS) documents that specify the codes, standards, regulations, and other requirements governing the testing, surveillance, and maintenance programs for the F/H Lab (Buildings 772-F, 772-1F, and 772-4F) (Ref. 2).

10.3 INITIAL TESTING PROGRAM

This section discusses the operational readiness and startup/restart test activities performed after major modifications/installations to the F/H Lab as required by DOE Order 425.1 (Ref. 3). Manual 12Q defines the term "major" as any modifications/installations that require changes in the facility authorization basis as approved by DOE (Ref. 4). This definition of "major" is used throughout this chapter.

10.3.1 TESTING OF MODIFICATIONS

Section 10.3.1 of the SRS DSA Support Document provides the SRNS requirements for the following items, which are also applicable to the F/H Lab (Ref. 2):

- Facility configuration modification and management
- Post-modification startup testing
- Restart of a facility after a major modification
- Implementation of a test plan to ensure readiness of the facility or the system to operate after being returned to service

To implement DOE Order 425.1, Manual 12Q contains the SRNS requirements and procedures for the uniform conduct of Readiness Self-Assessments (RSAs), Operational Readiness Reviews (ORRs), and Readiness Assessments (RAs) in connection with startup and restart activities of nuclear facilities, processes, equipment, and systems (Ref. 3, 4).

10.3.1.1 Testing of Facility Modifications

DOE Order 425.1 requires a determination of the need for an ORR and the performance of the ORR when needed before the restart of existing Hazard Category 1 or 2 nuclear facilities subsequent to a major plant modification, provided such a modification is required for future program work or for changing the existing safety basis previously approved by the DOE - Savannah River Operations Office (DOE-SR) (Ref. 3). The word "plant" is intended to include the SSCs of a facility building.

The F/H Lab does not have any Hazard Category 1 facilities. The only Hazard Category 2 facility in the F/H Lab is Building 772-F in accordance with Section 3.3 of this SAR. Therefore, no ORR determination and performance are needed for any modification-related restart activity in Buildings 772-1F and 772-4F, unless otherwise deemed appropriate by DOE-SR management in accordance with DOE Order 425.1. Also, no ORR determination and performance are required for any modification-related restart activity in Building 772-F, unless the activity changes the safety basis of the facility as currently approved by DOE.

DOE Order 425.1 also calls for a determination of the ORR requirement and its performance (when determined) before the initial startups of new Hazard Category 1, 2, and 3 nuclear facilities. In accordance with Section 3.3.2.2 of this SAR, Building 772-1F is a Hazard Category

3 Facility, and Building 772-4F is a Less Than Hazard Category 3 Facility. Therefore, DOE Order 425.1 requires an ORR determination and performance (if determined) before the initial startup of a new sub-facility or installation of equipment under expansion programs of Buildings 772-F and 772-1F only.

DOE Order 425.1 states that if a restart/startup activity needing an ORR determination does not require an ORR, then the activity shall be evaluated as to the need for performing an RA before the restart/startup.

F/H Lab restart/startup activities adhere to Manual 12Q to determine if an ORR or RA will be required (Ref. 4). When an ORR or RA is needed, it is performed by the Operations Evaluation Department (OED) of SRS in accordance with Manual 12Q. For certain startup activities, DOE-SR or OED may specify the requirement for performance of an RSA as a condition of the RA. In that case, the RSA is also performed in accordance with Manual 12Q.

In the recent past, the F/H Lab had one major modification project to construct the Airborne Radiation Removal Facility (Building 772-4F) to improve the nuclear air cleaning capability of the exhaust system in Building 772-F. The operational readiness and compliance assessment for this project was satisfactorily conducted in accordance with Procedure ESH/AL-AP-016 of Manual L4.3 (Ref. 5).

Core Requirements (CRs) are specified in DOE Order 425.1 (Ref. 3). CR 10 requires the development of an adequate startup or restart test program that includes adequate plans for graded operations testing to simultaneously confirm equipment operability, procedure viability, and operator training. Other CRs address needs for the following:

- Quality control of testing procedures
- Training and qualification of test personnel
- Control and calibration of test equipment
- Availability and examination of test records
- Assignment of functions, responsibilities, and reporting relationships for different functional positions within an organization

Manual 5E defines a startup/restart test program designed to simultaneously confirm all of the above requirements and objectives and provides confidence that a high level of performance and a safe, reliable operation can be achieved (Ref. 6). Section 10.3.1 of the SRS DSA Support Document summarizes the scope of Manual 5E (Ref. 2).

The restart/startup testing, after a major facility modification in the F/H Lab, may be performed by the site-level Startup Department in accordance with Manual 5E1 (Ref. 7). In some cases, the Facility Project Manager may opt to have the restart/startup testing performed by a project-specific startup group. In such cases, the project startup group either uses Manual 5E1 as the startup test plan or writes a project-specific startup test plan on the basis of relevant guidelines provided in Manual 5E or MCR 10 for Functional Area 16. The startup test program followed by the F/H Lab in connection with Project S2899 (construction of Building 772-4F) is discussed later in this section.

Manual 5E1 meets the requirements for the startup/restart test program as delineated in Manual 5E. This program identifies the plans necessary to define and control test activities performed to ensure the safe and reliable operation of SSCs. The manual includes procedures pertaining to test group organization, test support activities, administration of test procedures, conduct of testing, test review board, and qualification and certification of test personnel.

The last major modification project at the F/H Lab was Project S2899, which was the construction of the Airborne Radiation Removal Facility (Building 772-4F). Since Manuals 5E and 5E1 were not available at that time (only a draft of Manual 5E was available), the startup test activities for this project were performed by the project startup group in accordance with project-specific startup test procedures prepared as part of Manual L4.3 (Ref. 5). These procedures adequately addressed the following:

- Requirements and objectives pertaining to the startup test group organization
- Startup test procedure preparation
- Conduct of testing
- Training and qualification of test personnel
- Test reports
- Test equipment control

Any minor facility modification work in the F/H Lab is handled by the respective facility maintenance department. Any functional equipment checks after restart are performed in accordance with instructions of facility or design authority engineers.

10.3.1.2 Testing of Equipment Modifications

Section 10.3.1 of the SRS DSA Support Document discusses the SRNS requirements for the following (Ref. 2):

- Post-modification testing of equipment to demonstrate its performance of the intended functions
- Documentation of test results to ensure equipment operability
- Management review of the test documents to verify correction of the original problem
- Performance of controlled activities to ensure that the equipment is ready to be returned to service

DOE Order 425.1 and Manual 12Q consider equipment as a part of the facility SSCs (Ref. 3, 4). Therefore, the ORR, RA, and RSA requirements for facility construction and modification, as discussed in Section 10.3.1.1, apply to the major (new) installation and modification of equipment in the F/H Lab.

The need and method for ORR/RA determination and the performance of any ORR, RA, or RSA before any major post-modification restart or major post-construction startup of any major

equipment, in any of the three buildings (Building 772-F, 772-1F, or 772-4F) of the F/H Lab, are handled by the appropriate authorities in the same way as discussed for facility restarts/startups in Section 10.3.1.1.

The restart or startup testing activities, subsequent to a major equipment modification or installation (new) activities in the F/H Lab buildings, are normally performed by the restart/startup group of the project, in accordance with Manual 5E1 or a project-specific startup test plan prepared by the project restart/startup group of the facility (Ref. 7). Those activities are performed on the basis of the guidelines provided in Manual 5E for Functional Area 16 (Ref. 6).

10.3.2 ADEQUACY OF TESTING ACTIVITIES

Section 10.3.2 of the SRS DSA Support Document delineates the SRNS requirements for the adequacy of testing activities in terms of the following (Ref. 2):

- Testing equipment and test programs
- Planning and preparing for testing
- Assigning responsibilities to the test organization
- Training and qualifying test personnel
- Testing configuration control
- Testing other activities needed to support facility management to operate the plant safely

These requirements apply to and are met by F/H Lab testing activities in accordance with Manual 5E1 (Ref. 7).

Procedures contained in Manual L4.3 were used in conducting restart testing of Project S2899 in the construction of Building 772-4F (Ref. 5).

10.4 IN-SERVICE SURVEILLANCE PROGRAM

Section 10.4 of the SRS DSA Support Document provides the SRNS requirements for in-service surveillance and facility inspections, which are also pertinent to the F/H Lab (Ref. 2). In addition, Manuals 5Q1.2, 5Q1.5, and 1Q contain additional requirements and procedures, implemented by the in-service surveillance program used in the F/H Lab (Ref. 10, 11, 12).

Manual L2-1 contains procedures that provide facility-specific in-service surveillance requirements for the F/H Lab (Ref. 13).

10.4.1 PROVISIONS FOR TESTING AND CALIBRATIONS

Section 10.4.1 of the SRS DSA Support Document delineates the SRNS requirements for adequate surveillance tests and test equipment calibration (Ref. 2). These requirements ensure equipment operation within safe limits; specify the frequency of surveillance tests; and provide guidelines on planning, performance, and documentation of surveillance tests. These requirements are also pertinent to F/H Lab provisions for testing and calibrations.

Manual L4.02 includes procedures that require the planning, scheduling, tracking, and documentation of F/H Lab surveillance testing, inspections, and calibration efforts (Ref. 15). The procedures also include requirements for notification of supervision of any abnormal findings.

Surveillance checks of the main exhaust fans in Buildings 772-1F and 772-4F and of the diesel generators (no load and load tests) in Buildings 254-9F, 772-F, and 772-1F are performed in accordance with Manual L4.02.

Surveillance checks (for pressure drop) of the High-Efficiency Particulate Air (HEPA) filters, the prefilters, and the air handling units' supply filters are performed in accordance with Manual L4.02. These surveillance checks are for routine operability. Operability of the ventilation systems (i.e., fans exhausting air) is not required to meet evaluation guidelines in the accident analysis in Chapter 3. Only leak testing the HEPA filters determines actual HEPA filter efficiency - not air flow/pressure drop checks. The true indicators for HEPA filter failure between leak test intervals are the passive contributing stream samplers and the active stack monitors that detect contamination that has bypassed the filters.

Surveillance checks of the stack sampling and monitoring systems (for source response) are conducted in accordance with Manual 5Q1.5 (Ref. 11).

Surveillance calibration activities of the Building 772-4F isokinetic sampling system, Building 772-1F stack and building exhaust monitoring system, and stack air sampling/monitoring systems are performed in accordance with Manual 1Y (Ref. 17).

10.4.2 CONTROL AND CALIBRATION OF TEST EQUIPMENT

Section 10.5.5 discusses the control and calibration of Measuring and Test Equipment (M&TE). The guidelines described in that section also apply to the test equipment used for in-service surveillance.

10.4.3 TRENDING OF SURVEILLANCE TEST RESULTS

Because there is no operating Safety Class or Safety Significant equipment (F/H Lab has only passive Safety Significant equipment), no trending of test results is required. Therefore, the F/H Lab currently does not have a program to formally trend surveillance checks or test results.

The leak test for HEPA filters is a pass/fail test with a very narrow margin of acceptability (typically about 0.02%), thus, there is no significant range of values to trend. Operationally, the number of filter test failures is used as an indication (i.e., trend) of the need for changing an entire system's filters regardless of test results.

10.4.4 PROGRAMMATIC REVIEW

Section 10.4.4 of the SRS DSA Support Document discusses the SRNS requirements for periodic management assessment and correction (if needed) of the surveillance program, with the help of periodic management reviews of the documented surveillance results and inspections of site equipment and facilities (Ref. 2). These requirements are applied to F/H Lab management programmatic review of the in-service surveillance program.

The Technical Safety Requirements (TSR) tickler program, established by SRNS documents, generates tickler reports and calls for a review of the tickler system database and reports by the facility manager or tickler custodian at least every 12 months. The purpose of this review is as follows:

- To verify implementation adequacy of the surveillance program
- To discuss possible causes of failures or unfavorable trends
- To recommend any changes in the surveillance frequencies
- To correct any program deficiency

10.4.5 TRAINING OF SURVEILLANCE TESTING PERSONNEL

Section 10.5.2 discusses training of maintenance personnel. The training guidelines described in that section also apply to the training of surveillance testing personnel.

10.5 MAINTENANCE PROGRAM

F/H Lab requirements for the maintenance management program are consistent with SRNS requirements as described in Section 10.5 of the SRS DSA Support Document (Ref. 2). Chapter II of DOE Order 433.1 provides guidelines for the conduct of maintenance at DOE nuclear facilities, including the F/H Lab (Ref. 16). Manual 1Y provides requirements for the maintenance organization, maintenance work control, maintenance tool control, preventive maintenance, and closure business unit-specific addenda (Ref. 17). This information is used by the F/H Lab for planning maintenance activities.

Infrastructure and Project Support (IPS), provides maintenance resources. IPS conducts its maintenance activities for the F/H Lab in accordance with Standard Operating Procedures contained in Manual 1Y (Ref. 17).

10.5.1 MAINTENANCE ORGANIZATION AND ADMINISTRATION

Section 10.5.1 of the SRS DSA Support Document discusses the SRNS requirements for developing and administering an integral approach to the maintenance program (Ref. 2). These requirements clearly define the responsibility of the maintenance personnel and establish working relationships among all maintenance support organizational units. This section of the SRS DSA Support Document also discusses the roles of the Senior Maintenance Manager Council, which serves as the focal point for interfacing with DOE on sitewide maintenance issues.

IPS adheres to site-level requirements and guidelines in conducting the maintenance activities of the F/H Lab as well as in interfacing with the central maintenance organizations.

Manual 1Y identifies the requirements for the organization and administrative services of IPS management used to achieve a high level of performance in maintaining the F/H Lab facilities (Ref. 17).

10.5.2 TRAINING AND QUALIFICATION OF MAINTENANCE PERSONNEL

Section 10.5.2 of the SRS DSA Support Document delineates the SRNS requirements for developing and maintaining an effective maintenance training and qualification program (Ref. 2). The maintenance manager and supervisors are required to be directly involved in training the maintenance personnel. A Training Review Committee oversees this involvement. In addition, the maintenance program commands the overall support of the maintenance organization with regard to such items as the following:

- Defining the skill levels and responsibilities of various positions
- Defining training programs for each position
- Determining the training needs
- Providing instructors and training

- Establishing qualification criteria

The F/H Lab maintenance training and qualification programs are consistent with the above requirements and guidelines.

IPS procedures contained in Manual 1Y provide division-level guidance for establishing programs to train and qualify, as well as assess, the technical qualification of each maintenance individual (Ref. 17). IPS management uses the above procedures to do the following:

- Define the skill level
- Determine the training need
- Write the training program
- Provide actual training
- Establish qualification criteria of IPS personnel engaged in maintaining the F/H Lab

10.5.3 MAINTENANCE FACILITIES, EQUIPMENT, AND TOOLS

Section 10.5.3 of the SRS DSA Support Document delineates the SRNS requirements for a program to evaluate the adequacy of maintenance facilities, tools, and equipment through facility condition inspections and condition assessment surveys (Ref. 2). F/H Lab maintenance and IPS complies with these requirements to ensure the adequacy of the F/H Lab maintenance facilities, equipment, and tools.

Manual 1Y provides methods for determining the adequacy of maintenance facilities, equipment, and tools to efficiently support facility maintenance and maintenance training (Ref. 17). F/H Lab maintenance and IPS uses this manual to evaluate the adequacies of, and to identify any deficiencies in the areas of maintenance facilities, equipment, and tools for the F/H Lab.

10.5.4 POST-MAINTENANCE TESTING

Section 10.5.5 of the SRS DSA Support Document discusses the SRNS requirements for the performance of post-maintenance testing to verify that components and systems are capable of performing their intended function when returned to service after maintenance and to ensure that the original deficiency is corrected and no others are created (Ref. 2). F/H Lab maintenance and Facility Support Services Division Maintenance (FSSDM) adheres to the above requirements in performing post-maintenance testing in the F/H Lab. When post-maintenance testing is not required, any needed functional checks of equipment are performed in accordance with instructions of facility or design authority engineers.

Manuals 1Q and 1Y provide the quality requirements and responsibilities for IPS personnel when they are involved in testing activities (Ref. 12, 17). Test control requirements apply to various types of testing, including post-maintenance acceptance testing performed in the F/H Lab. Guidance in this manual addresses the needs and methods of test procedure preparation, test performance, and evaluation of test results to meet the above objectives.

10.5.5 CONTROL AND CALIBRATION OF MEASURING EQUIPMENT

Section 10.5.6 of the SRS DSA Support Document discusses the SRNS requirements for instituting a control and calibration program of M&TE to ensure the accurate performance of facility instrumentation and equipment used for testing, calibration, and repairs (Ref. 2). This section of the SRS DSA Support Document also requires the following:

- Documentation of M&TE calibration results
- Maintenance of a master inventory list of all calibrated M&TE
- Establishment of an M&TE history file
- Unique identification of the calibrated as well as out-of-calibration M&TE

F/H Lab and ISD comply with the above requirements in the control and calibration of measuring equipment in the F/H Lab.

Section 13.01 of Manual 1Y discusses the site-level control of the maintenance tools and is used by FSSDM as a guideline in controlling the tools used for F/H Lab maintenance (Ref. 17).

Manual 1Q defines the requirements and responsibilities for the control of M&TE (Ref. 12). This program ensures that devices used to verify the measurements of other equipment, or to calibrate and accept the measuring devices, have documentation of calibrated accuracy that is traceable to known standards.

10.5.6 MAINTENANCE HISTORY AND TRENDING

Section 10.5.7 of the SRS DSA Support Document discusses the SRNS recommendations for establishing and maintaining an equipment repair history and trending program (Ref. 2). This section of the SRS DSA Support Document also recommends inclusion of surveillance test data and information on past performance problems as part of the equipment repair history and its trending program.

Manual 1Y defines the requirements for the development and use of a maintenance history program (Ref. 17). Because there is no operating Safety Class or Safety Significant equipment (F/H Lab has only passive Safety Significant equipment), IPS and the F/H Lab currently do not implement this program on a formal basis.

10.6 REFERENCES

1. Nuclear Safety Management. Title 10, Energy. Code of Federal Regulations Part 830, U.S. Department of Energy, Washington, DC, January 2006.

2. Savannah River Site DSA Support Document – Site Characteristics and Program Descriptions. Rev. 0, WSRC-IM-2004-00008, Westinghouse Savannah River Company, Aiken, SC, October 2004.

3. Startup and Restart of Nuclear Facilities. DOE Order 425.1, U.S. Department of Energy, Washington, DC, March 2003.

4. Assessment Manual. Manual 12Q, Savannah River Nuclear Solutions, Aiken, SC.

5. Central Laboratories Facilities, F-Area Startup Manual. Manual L4.3, Rev. 8, Savannah River Nuclear Solutions, Aiken, SC, April 15, 1993.

6. WSRC Startup Test Manual. Manual 5E, Savannah River Nuclear Solutions, Aiken, SC.

7. Startup Services Program Manual. Manual 5E1, Vol. 3, Savannah River Nuclear Solutions, Aiken, SC.

8. Preparation Guide for U.S. Department of Energy Nonreactor Nuclear Facility Safety Analysis Reports. DOE-STD-3009-94, CN3, U.S. Department of Energy, Washington, DC, March 2006.

9. Deleted

10. Environmental, Safety and Health Department Radiation Monitoring Procedures. WSRC Procedure Manual 5Q1.2, Westinghouse Savannah River Company, Aiken, SC.

11. Environmental, Safety and Health Department Air Effluent Monitoring Procedures. WSRC Procedure Manual 5Q1.5, Westinghouse Savannah River Company, Aiken, SC.

12. Quality Assurance Manual. Manual 1Q, Savannah River Nuclear Solutions, Aiken, SC.

13. Analytical Laboratories CLAB Multi-Group Procedures. Manual L2-1, Savannah River Nuclear Solutions, Aiken, SC.

14. Deleted

15. Building 772-F/1F Support Logs. Manual L4.02, Savannah River Nuclear Solutions, Aiken, SC.

16. Maintenance Management Program for DOE Nuclear Facilities. DOE Order 433.1, U.S. Department of Energy, Washington, DC, June 2001.

17. Conduct of Maintenance. Manual 1Y, Savannah River Nuclear Solutions, Aiken, SC.

**CENTRAL LABORATORY FACILITY -
BUILDINGS 772-F, 772-1F, AND 772-4F
SAFETY ANALYSIS REPORT**

CHAPTER 11

OPERATIONAL SAFETY

August 2010

Savannah River
Nuclear Solutions, LLC
A Fluor Daniel Partnership

DISCLAIMER

This document was prepared by Savannah River Nuclear Solutions LLC (SRNS), under contract with the United States Department of Energy (DOE).

Release to and Use by Third Parties. As it pertains to releases of this document to third parties, and the use of or reference to this document by such third parties in whole or in part, neither SRNS, DOE, nor their respective officers, directors, employees, agents, consultants or personal services contractors (i) make any warranty, expressed or implied, (ii) assume any legal liability or responsibility for the accuracy, completeness, or usefulness, of any information, apparatus, product or process disclosed herein or (iii) represent that use of the same will not infringe privately owned rights. Reference herein to any specific commercial product, process, or service by trademark, name, manufacture or otherwise, does not necessarily constitute or imply endorsement, recommendation, or favoring of the same by SRNS, DOE or their respective officers, directors, employees, agents, consultants or personal services contractors. The views and opinions of the authors expressed herein do not necessarily state or reflect those of the United States Government or any agency thereof.

CONTENTS

Page

11.0 OPERATIONAL SAFETY 11.1-1

11.1 INTRODUCTION 11.1-1

11.1.1 Objective 11.1-1

11.1.2 Scope 11.1-1

11.2 REQUIREMENTS 11.2-1

11.3 CONDUCT OF OPERATIONS 11.3-1

11.3.1 Shift Routines and Operating Practices 11.3-1

11.3.1.1 Facility Operating Practices 11.3-1

11.3.1.2 Operations During Abnormal or Emergency Conditions 11.3-1

11.3.1.3 Authority to Operate 11.3-2

11.3.1.4 Operator Rounds and Tours 11.3-2

11.3.1.5 Personnel Protection 11.3-2

11.3.1.6 Shift Operating Bases 11.3-2

11.3.1.7 Resetting Alarms or Protective Devices 11.3-2

11.3.1.8 Potentially Distractive Written Material and Devices 11.3-3

11.3.1.9 Key Control 11.3-3

11.3.1.10 Overtime 11.3-3

11.3.2 Control Area Activities 11.3-3

11.3.3 Communications 11.3-3

CONTENTS (Continued)

Page

11.3.3.1 Written Communications 11.3-4

11.3.3.2 Verbal Communications 11.3-4

11.3.3.3 Public Address Communications 11.3-4

11.3.3.4 Radio Communications 11.3-4

11.3.3.5 Emergency Communications 11.3-4

11.3.4 Control of On-Shift Training 11.3-4

11.3.5 Control of Equipment and System Status 11.3-5

11.3.6 Lockouts and Tagouts 11.3-5

11.3.7 Independent Verification Practices 11.3-5

11.3.8 Logkeeping 11.3-6

11.3.9 Operations Turnover 11.3-6

11.3.10 Operations Aspects of Facility Chemistry and Unique Processes 11.3-6

11.3.11 Required Reading 11.3-6

11.3.12 Timely Orders to Operators 11.3-6

11.3.13 Operator Aid Postings 11.3-6

11.3.14 Equipment and Piping Labeling 11.3-7

11.4 FIRE PROTECTION 11.4-1

11.4.1 Fire Hazards 11.4-1

11.4.1.1 Building 772-F Combustible Loading 11.4-1

11.4.1.2 Building 772-F Fire Protection Issues 11.4-1

CONTENTS (Continued)

Page

11.4.1.3 Building 772-1F Combustible Loading 11.4-2

11.4.1.4 Building 772-1F Fire Protection Issues 11.4-2

11.4.1.5 Building 772-4F Combustible Loading 11.4-2

11.4.1.6 Building 772-4F Fire Protection Issues 11.4-2

11.4.2 Fire Protection Program and Organization 11.4-3

11.4.3 Combustible Loading Control..... 11.4-4

11.4.4 Firefighting Capabilities 11.4-5

11.4.5 Firefighting Readiness Assurance..... 11.4-5

11.5 REFERENCES 11.5-1

ACRONYMS AND ABBREVIATIONS

ARP	Alarm Response Procedure
CR	Control Room
DOE	Department of Energy
DSA	Documented Safety Analysis
FHA	Fire Hazards Analysis
F/H Lab	F/H Area Laboratory
ft^2	square foot
gpm	gallons per minute
NFPA	National Fire Protection Association
PA	Public Address
RCO	Radiological Control Operations
SAR	Safety Analysis Report
SOM	Shift Operations Manager
SRNS	Savannah River Nuclear Solutions
SRS	Savannah River Site
WSMS	Washington Safety Management Solution
WSRC	Washington Savannah River Company

11.0 OPERATIONAL SAFETY

11.1 INTRODUCTION

11.1.1 OBJECTIVE

The purpose of this chapter of the Safety Analysis Report (SAR) for the F/H Area Laboratory (F/H Lab) is to provide information on operational safety that satisfies Title 10 Code of Federal Regulations, Part 830, Nuclear Safety Management (Ref. 1), as amplified in Department of Energy (DOE) Standard 3009 (Ref. 2).

11.1.2 SCOPE

This chapter discusses general aspects of operational safety and fire protection, specifically focusing on the bases of operations programs specified by DOE Order 5480.19 (Ref. 3). Some elements of the conduct of operations program (e.g., management, organization, institutional safety provisions, procedures and training, and human factors) are covered in other chapters of this SAR. Chapter 17 of this SAR presents information on management, technical, and other organizations that support safe operation. Institutional safety provisions are described in Chapters 6 through 9 and 15. Chapter 12 of this SAR describes the process by which the technical content of the procedures and training programs is developed, verified, and validated. Chapter 13 describes human factors.

The scope of this chapter includes the following:

- Identification of aspects of the conduct of operations program applicable to the F/H Lab
- Integrated summary of the main features of the conduct of operations program
- Description of the F/H Lab fire protection program

Chapter 11 of the Savannah River Site (SRS) Documented Safety Analysis (DSA) Support Document describes the overall site conduct of operations and fire protection programs (Ref. 4). This chapter describes the features of the programs that are specific to the F/H Lab or that are different from the programs described in the SRS DSA Support Document.

When required information is provided in another chapter of this SAR, that chapter is referenced to limit repetition. In those cases where policies, programs, and practices important to safe operation are described in detail in other site documents, the salient features are summarized for inclusion in this chapter and the documents are referenced.

11.2 REQUIREMENTS

Section 11.2 of the SRS DSA Support Document identifies the Standard/Requirements Identification Documents that specify codes, standards, and regulations governing the operational safety policies and program elements for this F/H Lab (Ref. 4).

The F/H Lab uses a graded approach in complying with site-level operational safety policies and programs. Applicable site-level operational safety policies and programs are implemented at F/H Lab facilities so that available resources are used efficiently and produce maximum benefit.

11.3 CONDUCT OF OPERATIONS

Section 11.3 of the SRS DSA Support Document discusses the establishment, requirements, and implementation of the conduct of operations program at the F/H Lab (Ref. 4). The following sections describe the application of the graded approach to the conduct of operations specific to the F/H Lab.

11.3.1 SHIFT ROUTINES AND OPERATING PRACTICES

Savannah River Nuclear Solutions (SRNS) Manual 2S contains the guidance for conduct of operations relative to shift routines and operating practices (Ref. 5). The guidance for conduct of operations includes standards for professional conduct and management responsibilities that are fundamental to operating a facility. The following sections summarize the F/H Lab-specific guidance and requirements for shift routines and operating practices.

11.3.1.1 Facility Operating Practices

Analytical activities include, but are not limited to, sample preparation, sample analysis, and reagent preparation. These activities do not impact the operation of facility systems.

Shift Operations Managers (SOMs) at the F/H Lab report to the Facility Operations Manager. The SOM also fulfills the function of Facility Emergency Coordinator. Operators are responsible for the operation of various facility equipment.

All routine operations at the F/H Lab are authorized and implemented by approved policies and procedures. Operations that are not preauthorized by procedures must be approved by the Facility Operations Manager (or designee) prior to implementation.

11.3.1.2 Operations During Abnormal or Emergency Conditions

Alarm Response Procedures (ARPs) contained in Manual L4.2 identify and document the F/H Lab alarms that are used for alerting personnel to abnormal operating conditions and that require immediate response (Ref. 6). The ARPs fulfill the major functions addressed in Manual 2S (Ref. 5).

The intent of the initial response to F/H Lab alarms is to place the facility in a safe configuration. Shift personnel are responsible for placing the facility in a safe configuration and for consulting the cognizant technical function/engineering personnel to correct the condition in accordance with routine or special procedures.

The worst-case alarm scenario results in either the precautionary exit of personnel from laboratory modules or the evacuation of the entire facility to preclude or minimize radiological and hazardous chemical exposures to personnel. System shutdown is intended to mitigate equipment damage.

Because of the small number of alarms requiring immediate response and the relative simplicity of alarm responses, the F/H Lab uses simplified ARPs that incorporate the flow chart methodology and alarm response cards. The small number of ARPs does not warrant the issuance of a separate manual. When appropriate, ARPs direct personnel evacuation and/or cessation of activities involving nuclear materials.

11.3.1.3 Authority to Operate

Operations are authorized and performed in accordance with approved sitewide and F/H Lab-specific procedures. Operations that are not preauthorized by procedures are authorized by the SOM and/or Facility Operations Manager.

11.3.1.4 Operator Rounds and Tours

F/H Lab operations concerning operator rounds and tours are performed in accordance with Manual 2S (Ref. 5). Chapter 11 of the SRS DSA Support Document and Chapter 10 of this SAR discuss conduct of rounds and in-service inspections (Ref. 4).

11.3.1.5 Personnel Protection

F/H Lab operations concerning personnel protection are performed in accordance with Manual 2S (Ref. 5). F/H Lab operations include the handling of radionuclides and hazardous materials. Radionuclides enter the facility as part of the samples received from the separations facilities, waste management, and other site locations. Hazardous chemicals are used in the laboratories in small quantities. The radiation exposure levels of onsite personnel and the offsite public are maintained as low as reasonably achievable through the use of radiation protection design features and administrative controls. Chapters 7 and 8 of this SAR discuss the requirements for personnel protection.

11.3.1.6 Shift Operating Bases

The Control Room (CR) in Building 772-1F is the operating base for F/H Lab operations personnel. The operators return to this base when not performing duties within the facilities. As conditions and situations warrant, shift operating base(s) may be redesignated. Monitoring of other F-Area facilities may also be performed in the 772-1F CR or alternate locations.

11.3.1.7 Resetting Alarms or Protective Devices

F/H Lab operations with regard to resetting alarms, interlocks, and protective equipment setpoints are performed in accordance with Manual 2S (Ref. 5).

11.3.1.8 Potentially Distractive Written Material and Devices

F/H Lab operations are performed in accordance with Manual 2S (Ref. 5). Chapter 11 of the SRS DSA Support Document discusses sitewide guidelines for potentially distractive written material and devices (Ref. 4).

11.3.1.9 Key Control

Chapter 11 of the SRS DSA Support Document describes the sitewide key control program (Ref. 4). The F/H Lab maintains a key accountability log as specified in Manual 2S (Ref. 5). Manual L4.2 provides a program to control access to and use of controlled keys (Ref. 6).

11.3.1.10 Overtime

F/H Lab operations concerning overtime are performed in accordance with Manual 2S (Ref. 5). The F/H Lab adheres to sitewide guidelines for the use of overtime as stated in Chapter 11 of the SRS DSA Support Document (Ref. 4).

11.3.2 CONTROL AREA ACTIVITIES

Chapter III of DOE Order 5480.19 states that "the control area or CR is the most critical facility operating base and the coordination point for all important facility activities" (Ref. 3). The chapter also addresses monitoring of facility parameters and control panels.

Manual 2S defines "control area" as "an area or room having an assemblage of control devices (e.g., switches, dials, breakers, valves, etc.) and indicating/monitoring equipment (e.g., meters, gauges, recorders, digital and analog readouts, etc.) which are used for the control of a process or system, and interruption or misoperation of that process or system could jeopardize personnel safety, create a hazard to the environment, or result in significant financial loss" (Ref. 5).

No facility equipment is "controlled" or operated from a central location. There are no areas (i.e., laboratory modules) within the F/H Lab that require continuous monitoring or that are required to be continuously manned other than the CR. The F/H Lab CR does contain centralized alarms and indications in accordance with best management practice. Under normal conditions, the CR is generally occupied continuously by shift and supervisory personnel. The number of persons in the CR is limited to authorized individuals. Alarm panels are monitored.

11.3.3 COMMUNICATIONS

F/H Lab operations concerning communications are performed in accordance with Manual 2S (Ref. 5). The F/H Lab implements methods for effective, reliable, and accurate transmission of written and verbal information and imposes restrictions on the use of wireless communication devices.

11.3.3.1 Written Communications

The F/H Lab conducts the handling, review, and approval of written communications in accordance with Manual 2S (Ref. 5).

11.3.3.2 Verbal Communications

F/H Lab verbal communications are conducted in accordance with Manual 2S and are consistent with site guidelines described in Chapter 11 of the SRS DSA Support Document (Ref. 4, 5).

11.3.3.3 Public Address Communications

The area Public Address (PA) system is used to broadcast messages to all personnel in the F/H Lab during emergency, abnormal, and normal conditions. The speakers for Building 772-F are located in all personnel and utility corridors on the main floor and in selected areas of the service floor. The speakers in Buildings 772-1F and 772-4F are located in all personnel/utility corridors, lab modules, offices, and equipment rooms, and are also connected to the area PA system. Chapter 11 of the SRS DSA Support Document addresses the requirements concerning the use of the area PA system (Ref. 4).

11.3.3.4 Radio Communications

Hand-held two-way radios are used by building operations personnel for communicating during routine and abnormal conditions. Units are also located in the CR in Building 772-1F and in the Operations Office in Building 772-F. Areas where radio transmission is prohibited are clearly marked.

11.3.3.5 Emergency Communications

Emergency communications systems are required to ensure that individuals working in an area can be promptly alerted to facility emergencies. The F/H Lab emergency communications systems are tested frequently to ensure that they are functioning properly. To ensure that timely notifications are made, operations personnel have the authority to override other users of the area PA system.

A Facility Emergency Coordinator is assigned for each shift and fulfills the duties specified in the Savannah River Site (SRS) Emergency Plan, Manual SCD-7 (Ref. 7).

11.3.4 CONTROL OF ON-SHIFT TRAINING

The F/H Lab adheres to Manuals 2S and 4B for the control of on-shift training (Ref. 5, 8). Chapter 11 of the SRS DSA Support Document describes the SRS program for controlling on-shift training practices and includes the following topics (Ref. 4):

- On-shift training program development
- Adherence to programs
- Trainer/evaluator qualifications
- Operator qualification program approval

11.3.5 CONTROL OF EQUIPMENT AND SYSTEM STATUS

The F/H Lab adheres to the guidelines for the control of equipment and systems status found in Manual 2S (Ref. 5). Chapter 11 of the SRS DSA Support Document describes the SRS program for controlling equipment and systems status and includes the following topics (Ref. 4):

- Status change authorization and reporting
- Equipment and system alignments
- Equipment locking for administrative controls
- Alarm status

The F/H Lab maintains a status board and status is available through round sheets, log entries, and alarm panels.

11.3.6 LOCKOUTS AND TAGOUTS

The F/H Lab adheres to the guidelines for lockouts and tagouts described in Manuals 2S and 8Q (Ref. 5, 9). Chapter 11 of the SRS DSA Support Document describes the SRS program for lockouts and tagouts (Ref. 4).

11.3.7 INDEPENDENT VERIFICATION PRACTICES

The F/H Lab adheres to the guidelines for independent verification practices found in Manuals 2S and 8Q (Ref. 5, 9). Chapter 11 of the SRS DSA Support Document describes the SRS program for independent verification practices (Ref. 4).

Safety Significant components identified in the SAR are evaluated for implementation of independent verification practices. Identified components are labeled in the field.

Individual work packages specify any required independent verification and any hold points for inspection. There are no analytical activities for which error would lead to incorrect facility operation. For those operations deemed critical to the operation of a facility, independent verifications of the analysis, results, and calculations are performed.

11.3.8 LOGKEEPING

The F/H Lab adheres to the guidelines for establishing and maintaining operating logs described in Manual 2S (Ref. 5). Chapter 11 of the SRS DSA Support Document also describes the logkeeping requirements (Ref. 4).

11.3.9 OPERATIONS TURNOVER

F/H Lab facility operations are in compliance with Manual 2S (Ref. 5).

The F/H Lab adheres to the guidelines for operations turnover described in Manual 2S. Chapter 11 of the SRS DSA Support Document also describes operations turnover practices (Ref. 4).

11.3.10 OPERATIONS ASPECTS OF FACILITY CHEMISTRY AND UNIQUE PROCESSES

The total discharges from the main exhaust system in Buildings 772-F, 772-1F, and 772-4F are monitored for radioactive effluents by the stack monitoring systems, which are further described in Section 2.7 of this SAR.

While chemical operations are performed within the F/H Lab, the intent of Manual 2S is to monitor the chemical parameters of systems important to facility operations (e.g., steam systems, primary coolant systems, chilled water systems, and wet process systems) (Ref. 5). No systems of this nature are operated in the F/H Lab.

11.3.11 REQUIRED READING

The F/H Lab adheres to the guidelines for required reading assigned to all operations personnel and organizations that provide direct support. Manual 2S describes these guidelines (Ref. 5).

11.3.12 TIMELY ORDERS TO OPERATORS

The F/H Lab adheres to guidelines for issuance of timely orders to operators as described in Manual 2S (Ref. 5).

11.3.13 OPERATOR AID POSTINGS

The F/H Lab adheres to the operator aid posting guidelines described in Manual 2S (Ref. 5). Chapter 11 of the SRS DSA Support Document also describes operator aid posting (Ref. 4).

11.3.14 EQUIPMENT AND PIPING LABELING

A program for labeling equipment in operating systems is implemented at the F/H Lab in accordance with Manual 2S (Ref. 5). Instrumentation is labeled as required for operation and for compliance with Occupational Safety and Health Administration requirements. Chapter 8 of this SAR discusses the labeling of piping, containers, and vessels containing hazardous materials.

Implementation of the labeling program is addressed as part of the configuration management implementation plan for the Analytical Laboratories.

11.4 FIRE PROTECTION

Section 11.4 of the SRS DSA Support Document discusses the criteria for fire protection activities addressed under conduct of operations (Ref. 4). Chapter 15 of this SAR discusses spill control and emergency actions for flammable, combustible, and reactive liquids.

11.4.1 FIRE HAZARDS

This section provides a summary of the magnitude of potential facility fire hazards in terms of combustible and explosive loading in proximity to hazardous materials being protected. This section also presents the main fire protection issues at the F/H Lab. This information is based upon and correlated with the accident descriptions in Chapter 3 of this SAR, and the F/H Lab Fire Hazards Analyses (FHAs) (Ref. 11-13).

The three FHAs examined the fire protection and life safety features of Buildings 772-F, 772-1F, and 772-4F to determine whether the buildings are consistent with the requirements and fire protection objectives established by DOE Order 420.1B and nationally recognized fire protection codes and standards (Ref. 14). The FHAs were performed to assess the fire hazards and to determine the level of fire protection needed to meet DOE objectives. The following sections summarize some of the major fire hazards identified in the FHAs and the major fire protection issues for each building.

11.4.1.1 Building 772-F Combustible Loading

The major combustible loading on the main floor of Building 772-F is the large number of offices with typical quantities of office items (e.g., bookcases, file cabinets, manuals). On the service floor, the major combustible loading is the protective clothing laundry storage, the central flammable/combustible liquids storage area, and the two 100-gallon diesel fuel tanks for the standby diesel generators.

11.4.1.2 Building 772-F Fire Protection Issues

Building 772-F does not have National Fire Protection Association (NFPA)-approved fire-rated barriers to subdivide the facility fire area. Thus, unattended fires can possibly consume the entire facility. The concrete floor between the main floor and the service floor does provide partial isolation as do the various interior metal wall partitions for the main floor offices and laboratories. Automatic sprinklers cover all offices and laboratories on the main floor, the ceiling spaces above these areas, and the main portion of the service floor including the areas where laundry, flammable/combustible liquids, and diesel fuel are stored. Some areas not covered by automatic sprinklers include the fan and filter rooms and the entrance airlocks.

Any reduction of the facility combustible loading does not significantly affect the offsite radiation exposure hazard because the exposure hazard is primarily a function of source term inventory.

11.4.1.3 Building 772-1F Combustible Loading

The combustible loading for Building 772-1F includes the typical office loadings found in the CR, sample receiving area, Radiological Control Operations (RCO) low-level counting room, and RCO Office. Storage Room 157 is identified as a major combustible loading area due to the relatively large quantity of laboratory equipment. The facility compressed gas cylinder storage area is located outside the building, as is the 500-gallon diesel fuel tank for the standby diesel generator.

11.4.1.4 Building 772-1F Fire Protection Issues

Building 772-1F has no NFPA-approved fire-rated barriers. Thus, an unattended fire is unlikely to involve the entire facility. The automatic sprinkler system for Building 772-1F includes coverage for all of the laboratories, corridors and maintenance chases. The sprinkler system does not comply with NFPA 45, Ordinary Hazard Group I that requires 0.15 gallons per minute (gpm)/square feet (ft^2) based on remote area of 1,500 ft^2. The sprinkler density is 0.10 gpm/ft^2 over a remote area of 1,500 ft^2. The mechanical rooms, electrical room, filter room, and fan room are not sprinkler-protected, but do include detection.

Due to Building 772-1F's low inventory of radioactive materials (Hazard Category 3), the calculated offsite radiation exposure consequence of a seismic induced facility fire (see Chapter 3 of this SAR) is within the current evaluation guidelines and does not require Safety Class equipment.

Any reduction of the facility combustible loading does not significantly affect the offsite radiation exposure hazard because the exposure hazard is primarily a function of source term inventory.

11.4.1.5 Building 772-4F Combustible Loading

Building 772-4F does not contain storage areas, offices, or occupied work spaces. Combustible loading is limited mainly to the nuclear grade high-efficiency particulate air filters inside the stainless steel housings, electrical cable insulation, and lubricants in the exhaust fan motors.

11.4.1.6 Building 772-4F Fire Protection Issues

Building 772-4F has no NFPA-approved fire-rated barriers. The automatic sprinkler system covers the entire facility including the electrical room. Due to Building 772-4F's very low expected radioactive material inventory (Radiological Facility), the calculated offsite radiation exposure consequence of a facility fire (see Chapter 3 of this SAR) is well within current evaluation guidelines and does not require any Safety Class equipment.

11.4.2 FIRE PROTECTION PROGRAM AND ORGANIZATION

DOE Order 420.1B, Section 4.2, specifies requirements for facility fire protection programs (Ref. 14). These program requirements are implemented at the site level in accordance with Manual 2Q (Ref. 15). The program requirements are to ensure that, in the event of a fire, the public is protected from uncontrolled releases of radioactive materials to the environment. The program uses fire detection and extinguishing systems, administrative controls and procedures, and trained personnel to meet these goals.

Manual 2Q and the fire control preplans for Buildings 772-F, 772-1F, and 772-4F establish the administrative plans and procedures for fire protection in the F/H Lab (Ref. 15, 16).

The fire control preplans for Buildings 772-F, 772-1F, and 772-4F provide the SRS Fire Department with information used to prevent and suppress fires at the F/H Lab. The preplans provide information on the following:

- Utility valve/switch locations
- Rally points
- Incident command posts
- Communications during emergencies
- Locations of unusual hazards
- Building firefighting equipment

The Fire Protection Group maintains adequate mobile firefighting equipment, trains personnel, and inspects fire protection equipment.

SOMs are assigned on a full-time basis to Buildings 772-F, 772-1F, and 772-4F. The SOMs are responsible for personnel safety and accountability, evacuation routes, and notification of the SRS Fire Department in the event of a fire. Each person working in the F/H Lab receives annual fire prevention training as part of the site-level consolidated annual training program.

The F/H Lab adheres to Manual 2Q for its fire protection program and organization (Ref. 15). Section 11.4.2 of the SRS DSA Support Document discusses the SRS fire protection program and organization and includes the following topics (Ref. 4):

- Fire protection policy, organization, and administrative plans and procedures
- Fire and explosion protection criteria
- Fire protection requirements
- Fire protection reviews

Manual 2Q indicates specific standards and site procedures governing maintenance, testing, inspection, and repair.

11.4.3 COMBUSTIBLE LOADING CONTROL

The F/H Lab adheres to the combustible loading guidelines in Manual 2Q (Ref. 15). Section 11.4.3 of the SRS DSA Support Document discusses the SRS combustible loading control program and includes the following topics (Ref. 4):

- Control of combustibles
- Control of ignition sources

Manuals L2-1 and L2 provide procedural controls for laboratory modules and containment units to limit the allowable inventories of flammable and combustible liquids and reagents to levels that reduce possible risks and consequences of fires or explosions in the F/H Lab (Ref. 17, 18). Manuals L2-1 and L2 also provide requirements for proper safe storage practices of laboratory chemicals.

The following are examples of additional procedural controls currently in place at the F/H Lab; these controls may be revised periodically commensurate with changes in F/H Lab operations:

- The total laboratory module inventory of flammable liquids (including flammable liquids inside containment units) shall be limited to a maximum of 5.0 gallons.
- Flammable liquids shall be stored away from physical sources of ignition (e.g., motors, static electricity, pilot lights, boilers, and smoking areas).
- Flammables shall be stored in approved flammable safety cabinets away from oxidizers, corrosives, and explosives. Corrosives shall be stored in corrosion-resistant cabinets. Furthermore, oxidizing corrosives (e.g., nitric acid) shall be stored away from other incompatible corrosives.
- F/H Lab personnel shall be trained to minimize the amount of combustible loadings required for performing tasks under their responsibility and to minimize the amount of waste generated, such as flammable solvents and combustible materials.
- The storage location for hazardous chemicals shall be away from any physical interaction hazards. Hazardous waste drums shall be stored in designated, authorized, and properly maintained satellite areas. The F/H Lab imposes a time limitation in accordance with environmental regulations for storing full drums of hazardous waste. Environmental regulations limit the number of gallons of hazardous waste in a satellite area to 55 gallons. Chapter 9 of this SAR describes the administrative and operational controls for hazardous waste.
- The F/H Lab and containment units shall be constructed of noncombustible materials to the maximum extent practical.

Quarterly audits of chemical inventories are performed to ensure compliance with F/H Lab requirements and environmental regulations relative to storage practices and mechanisms for limiting combustible loadings. Periodic audits provide the added assurance to minimize possible fires where radioactive materials are handled and stored.

11.4.4 FIREFIGHTING CAPABILITIES

The fire control preplans for Buildings 772-F, 772-1F, and 772-4F satisfy the requirement of DOE Order 420.1B to have well-planned, well-thought-out fire response preplans for the F/H Lab (Ref. 14, 16). Manual 2Q-2 contains specific information on firefighting equipment for SRS and the F/H Lab (Ref. 19).

The F/H Lab adheres to the guidelines on firefighting capabilities found in Manual 2Q (Ref. 15). Section 11.4.4 of the SRS DSA Support Document discusses the SRS program for firefighting capabilities and includes the following topics (Ref. 4):

- Fire protection personnel, qualifications, and training requirements
- Firefighting in radiation and hazardous chemical environments
- Fire response procedures
- Firefighting equipment

All laboratory modules and most facility areas are protected by automatic sprinklers, except for areas with a high concentration of electrical equipment and such areas as the fan rooms.

Smoke and heat detectors are provided in critical areas, including heat detectors inside gloveboxes. Portable fire extinguishers are provided throughout the F/H Lab, and hydrants are available outside the buildings. Manual fire alarm pull boxes are installed in Buildings 772-F, 772-1F, and 772-4F.

As a backup to the fire protection systems provided in the F/H Lab, the SRS Fire Department has three fully staffed and equipped fire stations. The SRS Fire Department can respond with pumper trucks and an ambulance and can provide all firefighting equipment, including self-contained breathing apparatuses, for fighting fires involving radiological material releases. Chapter 2 of this SAR discusses the design bases and the fire protection systems installed in the F/H Lab.

Manual 2Q delineates required personnel qualifications and training (Ref. 15). Chapter 12 of this SAR describes additional training requirements.

11.4.5 FIREFIGHTING READINESS ASSURANCE

The F/H Lab adheres to the firefighting readiness assurance guidelines found in Manual 2Q (Ref. 15). Section 11.4.5 of the SRS DSA Support Document discusses the SRS program for firefighting readiness assurance and includes the following topics (Ref. 4):

- Fire prevention inspection program
- Fire safety drills and exercises
- Fire protection program reports and record keeping practices

11.5 REFERENCES

1. Nuclear Safety Management. Title 10 Energy, Code of Federal Regulations, Part 830, U.S. Department of Energy, Washington, DC, January 2006.

2. Preparation Guide for U.S. Department of Energy Nonreactor Nuclear Facility Safety Analysis Reports. DOE-STD-3009-94, CN3, U.S. Department of Energy, Washington, DC, March 2006.

3. Conduct of Operations Requirements for DOE Facilities. DOE Order 5480.19, Change 1, U.S. Department of Energy, Washington, DC, May 1992.

4. Savannah River Site DSA Support Document – Site Characteristics and Program Descriptions. WSRC-IM-2004-00008, Rev. 0, Westinghouse Savannah River Company, Aiken, SC, October 2004.

5. Conduct of Operations Manual. Manual 2S, Savannah River Nuclear Solutions, Aiken, SC.

6. Support Systems Procedures for F-Area Analytical Laboratories. Manual L4.2, Savannah River Nuclear Solutions, Aiken, SC.

7. SRS Emergency Plan. Manual SCD-7, Savannah River Nuclear Solutions, Aiken, SC.

8. WSRC Training and Qualification Program Manual. Manual 4B, Savannah River Nuclear Solutions, Aiken, SC.

9. Employee Safety Manual. Manual 8Q, Savannah River Nuclear Solutions, Aiken, SC.

10. Deleted

11. Fire Hazards Analysis for 772-F Facility. F-FHA-F-00006, Rev. 6, Savannah River Site, Aiken, SC, June 2010.

12. Fire Hazards Analysis for 772-1F Facility. F-FHA-F-00012, Rev. 5, Savannah River Site, Aiken, SC, June 2010.

13. Fire Hazards Analysis for 772-4F Fan House. G-FHA-F-00003, Rev. 3, Westinghouse Savannah River Company, Aiken, SC, April 2002.

14. Facility Safety. DOE Order 420.1B, U.S. Department of Energy, Washington, DC, December 2005.

15. WSRC Fire Protection Program Manual. Manual 2Q, Savannah River Nuclear Solutions, Aiken, SC.

16. Savannah River Site F-Area Fire Control Preplans. Manual 2Q2-4-F, Savannah River Nuclear Solutions, Aiken, SC.

17. Analytical Laboratories CLAB Multi-Group Procedures. Manual L2-1, Savannah River Nuclear Solutions, Aiken, SC.

18. Analytical Laboratories Standard Practices. Manual L2, Savannah River Nuclear Solutions, Aiken, SC.

19. Fire Department Operating Standards. Manual 2Q-2, Savannah River Nuclear Solutions, Aiken, SC.

WSRC-SA-96-26
REV. 8

**CENTRAL LABORATORY FACILITY -
BUILDINGS 772-F, 772-1F, AND 772-4F
SAFETY ANALYSIS REPORT**

CHAPTER 12

PROCEDURES AND TRAINING

May 2010

Savannah River
Nuclear Solutions, LLC
A Fluor Daniel Partnership

DISCLAIMER

This document was prepared by Savannah River Nuclear Solutions LLC (SRNS), under contract with the United States Department of Energy (DOE).

Release to and Use by Third Parties. As it pertains to releases of this document to third parties, and the use of or reference to this document by such third parties in whole or in part, neither SRNS, DOE, nor their respective officers, directors, employees, agents, consultants or personal services contractors (i) make any warranty, expressed or implied, (ii) assume any legal liability or responsibility for the accuracy, completeness, or usefulness, of any information, apparatus, product or process disclosed herein or (iii) represent that use of the same will not infringe privately owned rights. Reference herein to any specific commercial product, process, or service by trademark, name, manufacture or otherwise, does not necessarily constitute or imply endorsement, recommendation, or favoring of the same by SRNS, DOE or their respective officers, directors, employees, agents, consultants or personal services contractors. The views and opinions of the authors expressed herein do not necessarily state or reflect those of the United States Government or any agency thereof.

CONTENTS

Page

12.0 PROCEDURES AND TRAINING 12.1-1

12.1 INTRODUCTION 12.1-1

12.1.1 OBJECTIVE 12.1-1

12.1.2 SCOPE 12.1-1

12.2 REQUIREMENTS 12.2-1

12.3 PROCEDURES PROGRAM 12.3-1

12.3.1 DEVELOPMENT OF PROCEDURES 12.3-1

12.3.2 MAINTENANCE OF PROCEDURES 12.3-1

12.4 TRAINING PROGRAM 12.4-1

12.4.1 DEVELOPMENT OF TRAINING 12.4-1

12.4.2 MAINTENANCE OF TRAINING PROGRAMS 12.4-2

12.4.3 MODIFICATION OF TRAINING MATERIALS 12.4-2

12.5 REFERENCES 12.5-1

ACRONYMS AND ABBREVIATIONS

CFR	Code of Federal Regulations
DOE	Department of Energy
DSA	Documented Safety Analysis
F/H Lab	F/H Area Laboratory
S/RIDS	Standards/Requirements Identification Documents
SAR	Safety Analysis Report
SRNS	Savannah River Nuclear Solutions
SRS	Savannah River Site
WSRC	Washington Savannah River Company

12.0 PROCEDURES AND TRAINING

12.1 INTRODUCTION

12.1.1 OBJECTIVE

This chapter provides information relating to procedures and training at the F/H Area Laboratory (F/H Lab) that satisfies the requirements of Title 10 Code of Federal Regulation (CFR) 830 Nuclear Safety Management (Ref. 1), as amplified in DOE-STD-3009, relating to procedures and training (Ref. 4). This chapter documents the processes by which the technical content of procedures and training is developed, verified, and validated. Additionally, this chapter documents the mechanisms for identifying and correcting technical or human factors deficiencies in the procedures and training programs and provides information regarding compliance with the requirements of DOE Order 5480.20A (Ref. 2).

12.1.2 SCOPE

This chapter describes the processes by which the technical content of the procedures and training programs is developed, verified, and validated at the Savannah River Site (SRS) and the F/H Lab specifically. The procedures and training processes ensure that the F/H Lab is operated and maintained by personnel who are qualified and competent to carry out their job responsibilities. In addition, procedures and training elements have been developed to keep the processes current through the use of feedback and continuous improvement.

The procedures and training processes have been developed and implemented through sitewide programs. The Savannah River Site Documented Safety Analysis (DSA) Support Document describes these programs in greater detail (Ref. 3). This chapter, specific to the F/H Lab , supplements the SRS DSA Support Document in describing these programs. Only deviations, additions, or enhancements specific to the F/H Lab , outside the programs discussed in the SRS DSA Support Document, are discussed in detail in this chapter.

Chapter 12 of the SRS DSA Support Document contains the following information:

- An overall summary of the site procedures and training programs
- A description of the processes for developing, maintaining, and modifying written procedures and training materials
- A summary of the process for maintaining training records
- A summary of the methods used to feed back pertinent information (e.g., operations experience, new analyses, other SAR changes) to the procedures and training programs
- A description of the mechanisms used to identify and correct technical and human factors deficiencies

12.2 REQUIREMENTS

As stated in Section 12.2 of the SRS DSA Support Document, the Standards/Requirements Identification Documents (S/RIDs) state the codes, standards, and regulations governing the procedures and training program elements at the SRS. Programmatic compliance assessments are performed against the S/RIDs and documented, as specified, in the Compliance Assurance Manual, Manual 8B (Ref. 14). The Standards Management/Compliance Section maintains records of the programmatic compliance assessments.

The F/H Lab uses a graded approach in complying with site-level procedures and training programs. Applicable site-level procedures and training programs are implemented at F/H Lab facilities so that available resources are used efficiently and produce maximum benefit. F/H Lab has no personnel positions that require certification, but does have positions requiring qualification.

12.3 PROCEDURES PROGRAM

It is the policy of SRNS that the primary consideration in the operation of its facilities is the safety of the general public, employees, facility equipment, and the environment. This policy is accomplished by ensuring that operations and support organizations are in accordance with approved procedures that specify the requirements needed to perform work in a safe and efficient manner.

Section 12.3 of the SRS DSA Support Document states that the policies and procedures for the operation of SRS are performed in accordance with documented instructions, procedures, and drawings (Ref. 3). Manuals 1Q, 2S, and 1B discuss the policies and procedures at SRS (Ref. 6, 7, 8). In conjunction with these manuals, Analytical Laboratories procedure L2-00057, Procedure Process in AL, provides requirements and responsibilities that are specific to the Analytical Laboratories for the preparation, review, approval, revision, distribution, and cancellation of all F/H Lab procedures (Ref. 10).

12.3.1 DEVELOPMENT OF PROCEDURES

Section 12.3.1 of the SRS DSA Support Document discusses the SRNS procedure manuals that provide details for generating technical, response, and program-specific administrative procedures (Ref. 3). Manual 2S and SCD-2 include details on the required content, necessary research, format guidance, and development of procedures (Ref. 7, 11). These guidelines apply to both technical procedures (e.g., standard operating procedures, maintenance procedures, test procedures, surveillance procedures, and other procedures that provide step-by-step instructions for the performance of an activity or evaluation) and response procedures (e.g., abnormal operating procedures, emergency operating procedures, and alarm response procedures). Emergency plan-related procedures are discussed in Manual SCD-7 (Ref. 12) and are covered in Chapter 15 of this SAR.

At the F/H Lab , additional procedure development and review guidance are provided at the department level in Analytical Laboratories procedure L2-00057, Procedure Process in AL (Ref. 10).

12.3.2 MAINTENANCE OF PROCEDURES

Section 12.3.2 of the SRS DSA Support Document gives the requirements and procedures for the maintenance of procedures, including changes and revisions, periodic reviews, control and dissemination, and training and coordination (Ref. 3). Manual 2S provides guidance regarding the maintenance and control of procedures to ensure proper dissemination and use of facility procedures (Ref. 7). Analytical Laboratories procedure L2-00057, Procedure Process in AL provides guidance for the maintenance and control of F/H Lab procedures (Ref. 10). The guidance provided in Analytical Laboratories procedure L2-00057, Procedure Process in AL, is consistent with the requirements provided by Manuals 2S and 1B for the control of documents (Ref. 7, 8).

12.4 TRAINING PROGRAM

The mission of the training program at SRS is to develop programs that ensure site operations are conducted in accordance with the highest standards of safety, health, and environmental protection. This mission is accomplished by ensuring that personnel performing operations at SRS meet qualification and certification requirements and are trained in the performance and requirements of their duties.

Support personnel are trained under the guidelines of DOE Order 5480.20A (Ref. 2). Manual 4B addresses DOE Order 5480.20A and provides requirements for the following (Ref. 13, 2):

- Analysis and design of training programs
- Development of training material
- Implementation of training
- Evaluation of training programs
- Training staff qualification
- Training program administration

Chapter 12 of the SRS DSA Support Document discusses these requirements in greater detail (Ref. 3).

12.4.1 DEVELOPMENT OF TRAINING

Manual 4B summarizes the processes by which the technical content of training programs is developed, reviewed, and approved (Ref. 13). These guidelines apply to programs that define the communication and coordination activities necessary to carry out F/H Lab technical programs. Manual 4B provides details on the following items:

- Analysis of training requirements
- Design of training
- Development of training materials
- Instructor training and qualification
- Implementation of training
- On-the-job training

Section 12.4.1 of the SRS DSA Support Document discusses these items in greater detail (Ref. 3).

12.4.2 MAINTENANCE OF TRAINING PROGRAMS

Manual 4B describes the methods used to ensure the following (Ref. 13):

- Training programs reflect actual facility conditions.
- Procedures are current.
- The necessary coordination is performed before introducing new training programs or introducing changes in procedures covered by training programs.

Section 12.4.2 of the SRS DSA Support Document describes these methods in greater detail (Ref. 3). The SRS DSA Support Document also provides information regarding the Training Advisory Board, the Training Review Committee, the training oversight and assessment program, and the maintenance of training records.

12.4.3 MODIFICATION OF TRAINING MATERIALS

Manual 4B describes the methods used to identify and correct technical or human factors deficiencies in facility training programs, including operating experience, personnel examinations, and lessons learned from other facilities (Ref. 13). Section 12.4.3 of the SRS DSA Support Document describes these methods in greater detail (Ref. 3). The SRS DSA Support Document also gives details on the incorporation of changes to training materials, administration of training development requests, and evaluation of training effectiveness.

12.5 REFERENCES

1. Nuclear Safety Management. Title 10 Energy, Code of Federal Regulations, Part 830, U.S. Department of Energy, Washington, DC, January 2006.

2. Personnel Selection, Qualification, Training, and Staffing Requirements at DOE Reactor and Non-Reactor Nuclear Facilities. DOE Order 5480.20A, Change 1, U.S. Department of Energy, Washington, DC, November 1994.

3. Savannah River Site DSA Support Document – Site Characteristics and Program Descriptions. Rev. 0, WSRC-IM-2004-00008, Westinghouse Savannah River Company, Aiken, SC, October 2004.

4. Preparation Guide for US Department of Energy Nonreactor Nuclear Facility Safety Analysis Reports. DOE-STD-3009-94, CN3, U.S. Department of Energy, Washington, DC, March 2006.

5. Deleted

6. Quality Assurance Manual. Manual 1Q, Savannah River Nuclear Solutions, Aiken, SC.

7. Conduct of Operations Manual. Manual 2S, Savannah River Nuclear Solutions, Aiken, SC.

8. Management Requirements and Procedures. Manual 1B, Savannah River Nuclear Solutions, Aiken, SC.

9. Deleted

10. Analytical Laboratories procedure L2-00057, Procedure Process in AL, Westinghouse Savannah River Company, Aiken, SC.

11. Writer's Guide for Technical Procedures. SCD-2, Savannah River Nuclear Solutions, Aiken, SC.

12. Savannah River Site Emergency Plan. SCD-7, Savannah River Nuclear Solutions, Aiken, SC.

13. Training and Qualification Program Manual. Manual 4B, Savannah River Nuclear Solutions, Aiken, SC.

14. Compliance Assurance Manual. Manual 8B, Savannah River Nuclear Solutions, Aiken, SC.

WSRC-SA-96-26
REV. 8

**CENTRAL LABORATORY FACILITY -
BUILDINGS 772-F, 772-1F, AND 772-4F
SAFETY ANALYSIS REPORT**

CHAPTER 13

HUMAN FACTORS

May 2010

Savannah River
Nuclear Solutions, LLC
A Fluor Daniel Partnership

DISCLAIMER

This document was prepared by Savannah River Nuclear Solutions LLC (SRNS), under contract with the United States Department of Energy (DOE).

Release to and Use by Third Parties. As it pertains to releases of this document to third parties, and the use of or reference to this document by such third parties in whole or in part, neither SRNS, DOE, nor their respective officers, directors, employees, agents, consultants or personal services contractors (i) make any warranty, expressed or implied, (ii) assume any legal liability or responsibility for the accuracy, completeness, or usefulness, of any information, apparatus, product or process disclosed herein or (iii) represent that use of the same will not infringe privately owned rights. Reference herein to any specific commercial product, process, or service by trademark, name, manufacture or otherwise, does not necessarily constitute or imply endorsement, recommendation, or favoring of the same by SRNS, DOE or their respective officers, directors, employees, agents, consultants or personal services contractors. The views and opinions of the authors expressed herein do not necessarily state or reflect those of the United States Government or any agency thereof.

CONTENTS

Page

13.0 HUMAN FACTORS 13.1-1

13.1 INTRODUCTION 13.1-1

13.2 REQUIREMENTS 13.2-1

13.3 HUMAN FACTORS PROCESS 13.3-1

13.4 IDENTIFICATION OF HUMAN-MACHINE INTERFACES 13.4-1

13.4.1 772-F And 772-1F Containment Boundaries 13.4-1

13.4.1.1 Ventilation Systems 13.4-1

13.4.1.2 Gloveboxes 13.4-2

13.4.1.3 Shielded Cells 13.4-2

13.4.1.4 Building Structure 13.4-3

13.4.2 Hazardous Material Inventory Control Program 13.4-3

13.4.2.1 Radionuclide Inventory Control 13.4-3

13.4.2.2 Chemical Control Program 13.4-4

13.4.3 Combustible Liquid Inventory 13.4-4

13.5 DESIGN OPTIMIZATION OF HUMAN-MACHINE INTERFACES 13.5-1

13.5.1 Human Factors Evaluation 13.5-1

13.5.2 Evaluation Conclusions 13.5-2

13.6 REFERENCES 13.6-1

ACRONYMS AND ABBREVIATIONS

CR	Control Room
DOE	Department of Energy
F/H Lab	F/H Area Laboratory
HEPA	High-Efficiency Particulate Air
HMI	Human-Machine Interface
HVAC	Heating, Ventilation, and Air Conditioning
OGE	Off Gas Exhaust
SAR	Safety Analysis Report
SRNS	Savannah River Nuclear Solutions
SRS	Savannah River Site
SSC	Structure, System, and Component
TSR	Technical Safety Requirement
WSRC	Washington Savannah River Company

13.0 HUMAN FACTORS

13.1 INTRODUCTION

This chapter describes the impact of human factors on nuclear safety for the F/H Area Laboratory (F/H Lab), Buildings 772-F, 772-1F, and 772-4F. The facility relies on human actions for certain controls and operations that could effect the safety of the plant, and for initiating safety actions in the event of an accident. Human errors affecting safety primarily involve failures to follow administrative controls properly. Mitigative human actions that impact the safety analysis primarily involve the prevention of incorrect material inventories, and the proper operation of auxiliary systems.

Two of the three buildings in this facility were constructed and designed before human factors considerations were required by the Department of Energy (DOE) in the design process. No documented human factors studies of the facility have been conducted with the exception of the review completed to write this Safety Analysis Report (SAR) chapter.

The F/H Lab performs radioactive and fissile material sample analysis services for facilities throughout the Savannah River Site (SRS), but primarily for separations and waste management facilities. Small quantities of radioactive and fissile materials are handled in the F/H Lab. Technical Safety Requirements (TSRs) establish administrative controls on the amount of materials in the facility. Therefore, the safety of the facility depends primarily on adherence to procedures and administrative controls, especially in regards to maintaining material inventory within specified limits.

Company level procedures controlling equipment identification, status boards, operator aids, and procedure validation are in place and applicable to this facility (Ref. 1).

13.2 REQUIREMENTS

The two main buildings, Buildings 772-F and 772-1F, in this facility were designed and built before DOE Order 6430.1A, General Design Criteria, became effective (Ref. 2). No major modifications, requiring the application of DOE 6430.1A, have occurred in either of these two buildings. For these reasons, no human factors design requirements (Section 1300-12 of the order) were applied to Building 772-F or Building 772-1F. However, DOE Order 6430.1A does apply to Building 772-4F, which was built after that order became effective.

The original building, Building 772-F, was designed and built in the 1950's in compliance with DuPont and appropriate industry standards. Building 772-1F was designed and built during the early 1980's, also according to DuPont and industry standards. There is no documentation of human factors design criteria as applied to the design of these buildings, nor any evaluations of compliance with human factors criteria.

The Heating, Ventilation, and Air Conditioning (HVAC) systems were designed to appropriate HVAC standards. The effect of environmental conditions in relation to required protective clothing was considered in the evaluation of Human-Machine Interface (HMIs). Protective clothing is required in several locations throughout the facility including the laboratory modules, Shielded Areas A, B, and C, the 772-F Fan and Filter rooms, the transfer tank cells, and parts of the 772-F Service Floor. No protective clothing is required in most other parts of the facility, including the Radiological Control Office and the Control Room.

DOE Order 5480.19, Conduct of Operations Requirements for DOE Facilities, and DOE Order 5480.20, Personnel Selection, Qualifications, Training, and Staffing Requirements at DOE Reactors and Nonreactor Nuclear Facilities, are applicable to this facility (Ref. 3, 4). Chapter 11 “Operational Safety” discusses the degree to which the facility meets these requirements. Procedures and operator training are primary issues in the conduct of operations related orders. Chapter 12 discusses procedure and training requirements (i.e., operating scenarios requiring procedures and training to be performed safely), procedure and training design guidelines (i.e., procedure writer's and courseware development manuals), procedure validation and verification requirements, and personnel qualification testing requirements are in place to meet the DOE Orders.

Minimum F/H Lab staffing requirements are specified in the administrative TSRs for normal and stand-by modes of operation (Ref. 5). DOE Order 5480.22 specified that staffing requirements be included in the TSRs and are based on relevant safety analysis (Ref. 6). DOE Order 5480.19 specified that staffing levels be based on a facility staffing plan (Ref. 3). The F/H Lab TSRs and staffing plan address the pertinent human factors issues associated with facility staffing and are not being analyzed any further in this chapter.

13.3 HUMAN FACTORS PROCESS

A human factors review of selected F/H Lab systems was performed to generate this chapter. The review was conducted according to the Preparation Guide for U. S. DOE Nonreactor Nuclear Facility Safety Analysis Reports, DOE Standard 3009-94 (Ref. 7). Per this standard, human factors must be addressed for HMIs associated with Safety Significant and Safety Class Structures, Systems, and Components (SSCs) only. The combination of Safety Significant and Safety Class SSCs is referred to as safety SSCs in Reference 7.

Most of this facility (except for the new fan and filter building, Building 772-4F) was designed before DOE human factors design requirements in DOE 6430.1A were issued, as described in SAR Section 13.2. No initial human factors design reviews have been done for the facility or facility system upgrades subsequent to initial design.

The preparation for writing this SAR chapter included the completion of a human factors review based on information provided in the criticality fault trees (performed for the Accident Analysis, Chapter 3 of this SAR) and Washington Savannah River Company (WSRC), WSRC-TR-95-0182 (Ref. 8). Additionally, the Preliminary Hazards Analysis was reviewed (Ref. 9).

The human actions and related HMIs associated with the prevention, detection, and mitigation of these hazards were identified. This list was sent to accident analysis personnel for verification. The verified list of human actions and HMIs (described in Section 13.4) was then used to create human factors checklists based on nuclear industry guidelines. The human factors analysts then evaluated the actions and HMIs with respect to the applicable industry criteria in the checklists. The findings of the review are summarized in Section 13.5. Conduct of operations aspects of the F/H Lab facilities are reviewed annually by SRNS self-assessments, which include independent assessments. The HMIs evaluated in this chapter provide personnel information necessary to evaluate the operability of safety SSCs. Operability means that the safety SSC can perform its designed safety function. The HMI need not be a safety SSC in order to transmit the required information.

13.4 IDENTIFICATION OF HUMAN-MACHINE INTERFACES

Safety Class and Safety Significant systems in the F/H Lab were determined through a review of WSRC-TR-95-0182 (Ref. 8). The HMIs of those systems are identified in this section. Those interfaces are the subject of the HMI evaluations, which is discussed in Section 13.5. Engineering documentation, facility tours, and interviews with facility personnel were used to identify HMIs that control and monitor activities in the F/H Lab facilities (Ref. 5, 8, 9).

One common aspect for all systems in F/H Lab is that significant alarms are tied into a computer controlled Multiplex Alarm System. Significant alarms are alarms that provide information on safety SSCs. The alarm electronics need not be a safety SSC to perform this action. The computer's central processor unit and monitor are located in the 772-1F Control Room (CR), Room 146. Since the Building 772-1F CR is also provided with the necessary alarms for Buildings 772-F and 772-4F, all significant alarms are monitored round-the-clock in the Building 772-1F CR by shift personnel.

13.4.1 772-F AND 772-1F CONTAINMENT BOUNDARIES

The accident analysis for F/H Lab Facility credits several building structures and components as part of the containment boundary. Different accident scenarios require different combinations of the structures and components. In all accident scenarios, automatic or human action is not required for the structures or components to perform their required function. These passive structures and components are Safety Significant and include:

- Ventilation systems
  - Main Exhaust System, 772-F cell exhaust
    - Ductwork
    - One stage of High-Efficiency Particulate Air (HEPA) filters
  - Off Gas Exhaust (OGE) system
    - Exhaust pipe from Building 772-F to F-Area Canyon.
- Gloveboxes
- Shielded cells
- Building structure

13.4.1.1 Ventilation Systems

The ventilation systems (e.g., Main Exhaust and OGE Systems) ducts and HEPA filters can perform the desired containment function whether or not the system fans are operational. The ventilation systems do not contain components (i.e., dampers, vents, and inspection ports) that can be misconfigured, during normal operation, to breach the containment boundary.

The ventilation system ducts must be intact to act as part of the containment boundary. The ductwork integrity is verified by periodic visual inspections. These inspections are conducted by trained personnel using procedures to control the tasks.

One stage of HEPA Filters also constitutes part of the boundary. The integrity of the HEPA Filters is verified by periodic leak testing and filter changeout as needed. This testing is procedurally controlled and conducted by trained personnel. The Building 772-F OGE ventilation system exhausts through the main exhaust HEPA filters in 772-4F, in addition to the OGE HEPA Filters.

13.4.1.2 Gloveboxes

The function of the gloveboxes, which are present in Buildings 772-F and 772-1F, is to limit exposure to the laboratory worker from radioactive materials. The confinement function is provided by the glovebox structure which includes the gloves and gloveports, viewing windows, and the inlet and exhaust HEPA filters and housings. The gloveboxes act in conjunction with the ventilation system's ductwork and HEPA filters to provide containment of airborne radionuclides.

The gloveboxes have airlocks that allow materials to be moved into or out of the enclosure. If both airlock doors were to be left open during operation the containment boundary would be breached; however, differential pressure would maintain airflow into the glovebox and would prevent airborne contamination migration. Personnel monitor the pressure differential to determine glovebox integrity. In both Buildings 772-F and 772-1F, each glovebox has a differential pressure gauge for providing an indicator for glovebox-to-room pressure differential. Laboratory workers use the readings on the gauges to determine if the pressure differential is within acceptable ranges. This gauge would alert workers that the glovebox is not properly sealed. Additionally, by observing and interfacing with gloves in the gloveboxes, a worker can identify if there is a significant pressure differential problem or breach in a glove. Operator training and procedures instruct personnel to frequently monitor the glovebox differential pressures and gloves.

13.4.1.3 Shielded Cells

A shielded cell is a large containment enclosure used to handle high-activity radioactive materials. Building 772-F contains two shielded cells which are currently not operational. Building 772-1F contains four shielded cells. The cells in both Buildings 772-F and 772-1F are similarly designed. The isolation function is provided by the outer structure of the shielded cells, which includes the viewing windows. In Building 772-F, the shielded cells act in conjunction with the main exhaust system to provide containment of hazardous materials. In Building 772-1F, the shielded cells act in conjunction with the shielded cell exhaust system and the main exhaust system to provide containment of hazardous materials. The thick, high density, stainless steel lined concrete walls are designed to provide adequate shielding of personnel from unacceptable levels of gamma activity.

The shielded cells have airlocks that allow materials to be moved into or out of the enclosure. If both airlock doors were to be left open during operation the containment boundary would be breached; however, differential pressure would maintain airflow into glovebox and would prevent airborne contamination migration. Personnel monitor the pressure differential to determine the shielded cell's integrity. In both Buildings 772-F and 772-1F, each shielded cell has a differential pressure gauge for providing cell-to-room pressure differential. Laboratory workers use the readings on the gauges to determine if the pressure differential is within acceptable ranges. This gauge would alert workers that the shielded cell is not properly sealed. Operator training and procedures instruct personnel to frequently monitor the shielded cell differential pressures.

Shielded cell access locations are designed to provide direct radiation protection. Cell access is through sliding drawers in Building 772-1F and revolving doors (Lazy Susan) in Building 772-F. These access devices are designed so their shielding function can not be defeated by human error.

13.4.1.4 Building Structure

The function of Buildings 772-F, 772-1F, and 772-4F is to maintain structural integrity. The building structure protects materials from straight winds, tornadoes, and vehicles crashing into the Laboratory Buildings. The structure also protects materials from building collapse during an earthquake by remaining intact. The buildings are also a confinement boundary that provides a decontamination factor for certain accident scenarios. Normal operations that change the building configuration, such as opening personnel or equipment doors, hatches, or air vents, are not monitored because they do not influence the building's Safety Significant functions. There are no requirements for periodically checking the integrity of the building structure, therefore there are no human interfaces to identify or evaluate.

13.4.2 HAZARDOUS MATERIAL INVENTORY CONTROL PROGRAM

F/H Lab has an administrative program to ensure that facility hazardous material inventories are maintained within SAR established limits and support source term assumptions used in the accident analysis. The Hazardous Material Inventory Control Program controls both Radionuclide and Hazardous Chemical Inventories. Personnel interface with the inventory control programs through the use of procedures, training, container labeling, operator aids, status boards, and computerized tracking systems.

13.4.2.1 Radionuclide Inventory Control

Limits for the Radionuclide Inventory Control program are contained in the accident analysis chapter (see Chapter 3) of the SAR. The radionuclide limits for Building 772-F are contained in Table 3.3-3. The radionuclide limits for Building 772-1F are contained in Table 3.3-4.

The radionuclide content of the B-25 Waste Storage Containers located in the F/H Lab complex must also be controlled. The radionuclide limits for the B-25 Waste Storage Containers are

contained in Table 3.3-5. These limits are converted into physical requirements by inventory control procedures.

Radionuclide material inventory is tracked with a combination computer, paper, and technical oversight systems. Records for all materials in F/H Lab are maintained for receipt, labeling, movement, and shipment in order to ensure that operating limits are not exceeded. The computer/paper/oversight system is designed to notify the user (with messages on the computer display) if material limits will be exceeded. The inventory tracking system consists of a computer terminal, keyboard and label printer, which are located in the corridor outside Room 147 (Building 772-1F).

The Nuclear Criticality Safety Program tracks fissile materials contained in F/H Lab complex. The radionuclide material inventory monitors the current fissile material status of the facility. Fissile material limits are contained in operating procedures and postings.

13.4.2.2 Chemical Control Program

The Chemical Control Program maintains the F/H Lab facility Hazardous Chemical Inventory, combustible liquid status in gloveboxes, radiohoods, and radiobenches, and Propane Control Requirements within prescribed limits. Limits for the Hazardous Chemical Inventory Control program are contained in the accident analysis chapter (see Chapter 3) of the SAR. The chemical limits for F/H Lab complex are contained in SAR Chapter 3 Tables 3.3-7. This program identifies chemicals that present a hazard to facility workers and ensures separation of reactive chemicals and management of time sensitive chemicals for prevention of unplanned chemical reactions. This inventory system relies on procedures and manual and computerized tracking systems. The Chemical Control Program is both internally and externally audited for compliance and effectiveness.

The quantity of laboratory propane in a room where operations involve radioactive or fissile material is controlled in F/H Lab. There are TSRs for propane usage, which are administratively controlled by written procedures. Any change to the propane inventory or the movement of containers is covered by a procedure for installation.

13.4.3 COMBUSTIBLE LIQUID INVENTORY

The combustible liquid inventory program for gloveboxes, radiohoods, and radiobenches is part of the Facility Fire Protection Program. This inventory program relies on procedures and manual tracking and does not use an automated computer tracking system.

13.5 DESIGN OPTIMIZATION OF HUMAN-MACHINE INTERFACES

Engineering documentation was used to define F/H Lab HMIs of Safety Significant systems. Section 13.4 describes the Safety Significant HMIs, which is the basis for the human factors evaluation in this section.

13.5.1 HUMAN FACTORS EVALUATION

The human factors evaluation was conducted using human factors requirements developed for the commercial nuclear, military, and chemical industries. Safety Significant SSCs HMIs were evaluated as meeting human factors requirements if the following criteria were addressed:

- Human factors design guidelines
- Procedures guidelines
- Training guidelines

Each of the HMIs was judged to be well designed in regards to human factors criteria if the system(s)/component(s):

- Are designed to human factors related engineering standards that meet or exceed national standards
- Were subjected to a documented human factors study conducted by the system/component manufacturer
- Are a standard industrial design that has been used for an extended period of time in similar applications at SRS or at other facilities without significant or reoccurring problems
- Are the subject of facility or site level commitments to comply with DOE Orders
- Were evaluated directly with respect to human factors guidelines using appropriate checklists or other techniques and were judged to meet the guidelines

If any of these five criteria are applicable, then the Safety Significant HMIs is judged to be adequately designed in terms of human factors. If the Safety Significant HMIs meets the human factors design, procedure, and training guidelines then the interface is evaluated as meeting human factors requirements and can be safely and effectively operated.

Human factors design guidelines have two major aspects. One is the influence of the environment on the humans ability to interface with the machine. The second is the design of the specific interface. Environmental parameters include the following: equipment access (i.e., room to move around the equipment and clear routes to the equipment); lighting; noise; HVAC; and communications. Environmental parameters were evaluated by confirming the existence of design standards or using human factors guideline checklists. Interface design includes anthropometrics (i.e., can a person physically operate the equipment?), information availability (i.e., is a parameter, alarm, diagram provided?), and information perception (i.e., is the

information large enough, the right color, worded properly?). Human factors checklists and DOE Order commitments were the assessment parameters used in this part of the evaluation.

The procedure guidelines require that a system be in place to assure appropriate procedures are written, the procedures are usable, and the procedures are verified and validated. The training guidelines require a system be provided to assure necessary training is developed, the training is properly presented, and the training recipients are tested to confirm mastery of the subject matter. For procedures and training requirements site and facility level administrative controls are in place to comply with DOE Orders discussed in Section 13.2.

13.5.2 EVALUATION CONCLUSIONS

Environmental aspects of the F/H Lab facility were designed to accepted industry standards. These standards have been used successfully at SRS for many years. The effect of environmental conditions in combination with required protective clothing was evaluated. Protective clothing is required in several locations throughout the facility including the laboratory modules, Shielded Areas A, B, C, and E, the Building 772-F Fan and filter rooms, the transfer tank cells, and parts of the Building 772-F Service Floor. However, no protective clothing is required in most other parts of the facility, including the Radiological Control Office or the Shift Supervisor's Offices. Protective clothing was not found to impair the ability of facility personnel to adequately operate safety SSCs.

Procedure and training requirements are subject to DOE Order commitments and are assessed as fully adequate to assure correct operator actions.

Safety SSC HMIs were evaluated. All key alarms are provided and accessible to the operators. However, some aspects of the HMIs failed to meet human factors guidelines.

Inconsistent placement of instrument labels was found in several locations in the facility. According to human factors guidelines, throughout a facility, labels should be placed consistently above their respective instruments. On the status panels in the Building 772-1F Shift Supervisor's Office, Building 772-F Services Panelboard, some labels are placed above their respective instruments, while other labels are placed below. Labels are placed below the instruments rather than above them for several Magnehelic gages.

These inconsistencies in use of labeling have the potential to confuse the operators of these systems, and they may contribute to operator error. Despite these human-machine design discrepancies, after reviewing information in the 200-Area Data Bank, it was determined that these design discrepancies have not contributed to any significant human errors. Since none of the HMIs are credited for accident mitigation in the Chapter 3 analyses, these design discrepancies are not a major concern.

13.6 REFERENCES

1. Conduct of Operations Manual. Manual 2S, Savannah River Nuclear Solutions, Aiken, SC.

2. General Design Criteria. DOE Order 6430.1A, U.S. Department of Energy, Washington, DC, April 1989.

3. Conduct of Operations Requirements For DOE Facilities. DOE Order 5480.19, Change 2, U.S. Department of Energy, Washington, DC, October 2001.

4. Personnel Selection, Qualifications, Training, and Staffing Requirements for DOE Nuclear Facilities. DOE Order 5480.20A, U.S. Department of Energy, Washington, DC, November 1994.

5. Technical Safety Requirements, Savannah River Site, F-Area Central Laboratory Facility, Buildings 772-F, 772-1F, and 772-4F. WSRC-TS-95-18, Washington Savannah River Company, Aiken, SC.

6. Technical Safety Requirements. DOE Order 5480.22, Change 2, U S. Department of Energy, Washington, DC, January 1996.

7. Preparation Guide for U. S. Department of Energy Nonreactor Nuclear Facility Safety Analysis Reports. DOE-STD-3009-94, CN3, U.S. Department of Energy, Washington, DC, March 2006.

8. Gerrard, P.B. Functional Classification Report for the Central Laboratory Facility Buildings 772-F, 772-1F & 772-4F. WSRC-TR-95-0182, Rev. 3, Westinghouse Savannah River Company, Aiken, SC, May 2000.

9. Preliminary Hazards Analysis, Central Laboratories Facility. WSRC-TR-94-0261, Westinghouse Savannah River Company, Aiken, SC, September 1994.

WSRC-SA-96-26
REV. 8

**CENTRAL LABORATORY FACILITY -
BUILDINGS 772-F, 772-1F, AND 772-4F
SAFETY ANALYSIS REPORT**

CHAPTER 14

QUALITY ASSURANCE

May 2010

Savannah River
Nuclear Solutions, LLC
A Fluor Daniel Partnership

DISCLAIMER

This document was prepared by Savannah River Nuclear Solutions LLC (SRNS), under contract with the United States Department of Energy (DOE).

Release to and Use by Third Parties. As it pertains to releases of this document to third parties, and the use of or reference to this document by such third parties in whole or in part, neither SRNS, DOE, nor their respective officers, directors, employees, agents, consultants or personal services contractors (i) make any warranty, expressed or implied, (ii) assume any legal liability or responsibility for the accuracy, completeness, or usefulness, of any information, apparatus, product or process disclosed herein or (iii) represent that use of the same will not infringe privately owned rights. Reference herein to any specific commercial product, process, or service by trademark, name, manufacture or otherwise, does not necessarily constitute or imply endorsement, recommendation, or favoring of the same by SRNS, DOE or their respective officers, directors, employees, agents, consultants or personal services contractors. The views and opinions of the authors expressed herein do not necessarily state or reflect those of the United States Government or any agency thereof.

CONTENTS

Page

14.0 QUALITY ASSURANCE 14.1-1

14.1 INTRODUCTION 14.1-1

14.1.1 Objective 14.1-1

14.1.2 Scope 14.1-1

14.2 REQUIREMENTS 14.2-1

14.3 QUALITY ASSURANCE PROGRAM AND ORGANIZATION 14.3-1

14.3.1 Quality Assurance Policy 14.3-1

14.3.2 SRNS Quality Assurance Program Definition 14.3-1

14.3.3 SRNS Organization and Responsibilities 14.3-1

14.3.4 Special Program Requirements 14.3-1

14.3.5 Personnel Training and Qualification 14.3-1

14.3.5.1 Qualification of Personnel 14.3-1

14.3.5.2 Training 14.3-2

14.4 QUALITY IMPROVEMENT 14.4-1

14.4.1 Corrective Action System 14.4-1

14.5 DOCUMENTS AND RECORDS 14.5-1

14.5.1 Documents 14.5-1

14.5.2 Records 14.5-1

14.6 QUALITY ASSURANCE PERFORMANCE 14.6-1

14.6.1 Work Processes 14.6-1

CONTENTS (Continued)

Page

14.6.1.1 Performance of Work 14.6-1

14.6.1.2 Identification and Control of Items 14.6-1

14.6.1.3 Handling, Storing, and Shipping 14.6-1

14.6.1.4 Calibration and Maintenance of Monitoring and Data Collection Equipment 14.6-2

14.6.1.5 Status Indicators 14.6-2

14.6.1.6 Control of Computer Software 14.6-2

14.6.2 Design 14.6-2

14.6.2.1 Design Development 14.6-2

14.6.2.2 Design Change Control 14.6-2

14.6.2.3 Temporary Modifications 14.6-2

14.6.2.4 Design Interfaces 14.6-3

14.6.2.5 Design Records 14.6-3

14.6.2.6 Design Verification and Validation 14.6-3

14.6.3 Procurement 14.6-3

14.6.3.1 Procurement Program Definition 14.6-3

14.6.3.2 Supplier Selection and Evaluation 14.6-3

14.6.3.3 Product Acceptance 14.6-3

14.6.4 Inspection and Testing for Acceptance 14.6-4

14.6.4.1 Measuring and Test Equipment 14.6-4

14.6.5 Assessment 14.6-4

14.6.5.1 Safety Review and Performance Assessments 14.6-4

CONTENTS (Continued)

Page

14.6.5.2 Management Assessments and Self-Assessments 14.6-4

14.6.5.3 Independent Assessment 14.6-4

14.7 REFERENCES 14.7-1

ACRONYMS AND ABBREVIATIONS

CFR	Code of Federal Regulations
DOE	Department of Energy
DSA	Documented Safety Analysis
F/H Lab	F/H Area Laboratory
IPI	Installed Process Instrumentation
ISMS	Integrated Safety Management System
QA	Quality Assurance
QAMP	Quality Assurance Management Plan
SAR	Safety Analysis Report
SRNS	Savannah River Nuclear Solutions
SRS	Savannah River Site
WSRC	Washington Savannah River Company

14.0 QUALITY ASSURANCE

14.1 INTRODUCTION

14.1.1 OBJECTIVE

The purpose of this chapter is to provide information that satisfies Title 10 Code of Federal Regulations (CFR) Part 830, Sub-Part A, sections 120 - 122 Nuclear Safety Management, pertaining to the Quality Assurance (QA) program on Savannah River Site (SRS) as it relates to the F/H Area Laboratory (F/H Lab) (Ref. 1). Chapter 14 of the SRS Documented Safety Analysis (DSA) Support Document, provides general information regarding the link between the Integrated Safety Management Systems (ISMS) and QA Program that fulfill the non-facility specific objectives of this chapter and present information demonstrating that the following conditions exist (Ref. 2):

- The operating organization is part of a network of QA policy and programs in terms of organizational structure and interfaces, management policy, training, quality improvement, and document and records control.
- The network of programs is sufficient to ensure that the performed safety-related work meets the QA requirements.

14.1.2 SCOPE

Chapter 14 of SRS DSA Support Document discusses all site-level QA policies, programs, and procedures (Ref. 2). It also provides a brief program description, which summarizes sitewide programs including the principal quality responsibilities assigned to Savannah River Nuclear Solutions (SRNS) management and organizations and presents material to show that QA measures are in effect to control all quality-related activities during the design, construction, and operation of the SRS in compliance with DOE Order 414.1C and 10 CFR 830.120 (Ref. 3, 8).

In addition to site-level requirements described by the SRS DSA Support Document, this chapter describes the QA requirements that are specific to the F/H Lab.

14.2 REQUIREMENTS

The sitewide QA program established by SRNS addresses the requirements designed to comply with the safety basis of each facility at SRS. Chapter 14 of the SRS DSA Support Document (Ref. 2) lists the applicable documents that govern the QA policies and programs addressed in this chapter. In addition, Manual L2 describes the requirements specific to the QA program for the F/H Lab (Ref. 4).

The scope of requirements specified by 10 CFR 830.120 apply to the Hazard Category 2 and 3 nuclear facilities (i.e., Buildings 772-F and 772-1F and the B-25 waste container staging areas) (Ref. 8). DOE Order 414.1C applies to the radiological facility (i.e., Building 772-4F).

The F/H Lab uses a graded approach in complying with site-level procedures and quality assurance programs. Applicable site-level procedures and quality assurance programs are implemented at F/H Lab facilities so that available resources are used efficiently and produce maximum benefit.

14.3 QUALITY ASSURANCE PROGRAM AND ORGANIZATION

This section describes the responsibilities, authorities, and duties of persons and organizations performing QA functions for the site and for the F/H Lab specifically.

14.3.1 QUALITY ASSURANCE POLICY

The QA policy implemented by the F/H Lab is described in the Quality Assurance Management Plan (QAMP) and Chapter 14 of the SRS DSA Support Document (Ref. 12, 2).

14.3.2 SRNS QUALITY ASSURANCE PROGRAM DEFINITION

Chapter 14 of the SRS DSA Support Document provides an overview of the site QA program. .In addition, the F/H Lab implements Manual L2 and Manual 1Q (Ref. 2, 4, 5).

14.3.3 SRNS ORGANIZATION AND RESPONSIBILITIES

The SRNS Quality Assurance Program is described in the SRNS QAMP. This document defines the QA program including organizational structure, functional responsibilities, authority at the different organizational levels, and interfaces between functional groups. It also provides the basis for management processes including those designated for planning, scheduling and providing resources for work to be conducted (Ref. 12).

All independent oversight QA functions are implemented directly from the procedures in Manual 1Q, and no implementing procedures at the facility level are needed (Ref. 5).

The F/H Lab organization is discussed in Chapter 17 of this SAR.

14.3.4 SPECIAL PROGRAM REQUIREMENTS

The F/H Lab implements Manual L2 for special QA program requirements (Ref. 4).

14.3.5 PERSONNEL TRAINING AND QUALIFICATION

Personnel are provided training to ensure initial and continued proficiency in the tasks they are assigned.

14.3.5.1 Qualification of Personnel

F/H Lab personnel are required to meet the qualification requirements mandated through site documents. Chapter 12 of this SAR addresses qualification.

14.3.5.2 Training

F/H Lab personnel are required to meet the training requirements mandated through site documents and Chapter 12 of this SAR.

14.4 QUALITY IMPROVEMENT

Manual 1Q, 1B and QAMP provide a program that establishes the methods used to ensure continuous quality improvement. Included in this program are measures for continuous assessment of items, materials, and processes to detect quality problems and nonconformances; methods for initiation and documentation of corrective action; and mechanisms for continuous improvement of the quality assurance program (Ref. 5, 6, 12).

14.4.1 CORRECTIVE ACTION SYSTEM

The F/H Lab implements the requirements of the site QA program to detect and correct quality problems. The corrective action system identifies the mechanisms used to identify the cause of the problem and measures needed to prevent recurrence. Manual 1Q and 1B provides further details of the corrective action system (Ref. 5, 6).

14.5 DOCUMENTS AND RECORDS

14.5.1 DOCUMENTS

Manuals 1Q and 1B define the responsibilities and requirements for the following activities for documents designated as QA records at SRS (Ref. 5, 6):

- Generation
- Identification
- Authentication
- Receipt
- Indexing
- Storage
- Preservation
- Retrieval
- Correction
- Disposition

14.5.2 RECORDS

The F/H Lab implements the records management program requirements of Manuals 1Q and 1B (Ref. 5, 6). The records management program does the following:

- Defines the organization and responsibilities of records management personnel
- Provides a definition of quality records generated
- Provides a definition of the Records Inventory and Disposition Schedule procedure, which presents detailed instructions for the handling of quality records (Ref. 7).

14.6 QUALITY ASSURANCE PERFORMANCE

14.6.1 WORK PROCESSES

14.6.1.1 Performance of Work

The F/H Lab implements Manual 1Q using a graded approach so that approved technical procedures, hazard controls, and administrative controls are applied appropriately to items or services based upon their importance to nuclear and radiological safety, potential environmental impact, potential industrial safety hazards, and reliability and operability, with nuclear safety being assigned the highest importance (Ref. 5).

14.6.1.2 Identification and Control of Items

Manual 1Q establishes requirements for the identification and control of items to ensure their proper use (Ref. 5). Items include the following:

- Materials
- Equipment
- Components
- Appurtenances
- Assemblies
- Modules
- Parts
- Structures
- Subsystem units
- Subassemblies
- Systems

Controls are established to ensure that only correct and accepted items are used and installed.

14.6.1.3 Handling, Storing, and Shipping

Manual 1Q establishes requirements for the handling, storing, and shipping of items to prevent damage, loss, or deterioration (Ref. 5). These requirements are derived from national consensus standards, SRS standards, and technical documents.

14.6.1.4 Calibration and Maintenance of Monitoring and Data Collection Equipment

Installed Process Instrumentation (IPI) is installed equipment used for monitoring or collecting data from SRNS processes and facility operations. IPI is considered to be an integral part of the monitored system. A program describing the controls applicable to IPI has been established and is implemented by the F/H Lab as described in Manual 1Q (Ref. 5).

14.6.1.5 Status Indicators

Managers of organizations that perform operating, support, or experimental functions are required to maintain physical status indicators and supporting documentation for those work processes under their control. The F/H Lab implements the requirements of Manual 1Q for status indicators (Ref. 5).

14.6.1.6 Control of Computer Software

The F/H Lab implements the requirements of Manual 1Q for the control of computer software (Ref. 5).

14.6.2 DESIGN

Written procedures have been established and implemented to perform and control design, including design requirements, inputs, processes, outputs, changes, records, and organizational interfaces as described in Manual 1Q and Manual E7 (Ref. 5, 9).

14.6.2.1 Design Development

Necessary controls are implemented to assure items are designed using the appropriate engineering and scientific principles and standards. Applicable requirements and design bases are incorporated into each new design as appropriate using the process described in Manual 1Q and Manual E7 (Ref 5, 9) .

14.6.2.2 Design Change Control

Changes to the final design, field changes, modifications, and changes resulting from nonconforming items are controlled in accordance with site-level procedures and policies in Manual 1Q and Manual E7 (Ref. 5, 9).

14.6.2.3 Temporary Modifications

Temporary modifications at the F/H Lab provide controls similar to those of permanent design changes and are performed in accordance with site-level procedures and policies described in Manual 1Q and Manual E7 (Ref. 5, 9).

14.6.2.4 Design Interfaces

Design interfaces at the F/H Lab are identified and controlled using site-level procedures and policies in Manual 1Q and Manual E7 (Ref. 5, 9).

14.6.2.5 Design Records

Design control procedures provide for the collection, storage, and maintenance of design documentation and records as described in Manual 1Q and Manual E7 (Ref. 5, 9).

14.6.2.6 Design Verification and Validation

Independent design verification and validation at the F/H Lab is performed prior to approval and implementation using site-level procedures and policies as described in Manual 1Q and Manual E7 (Ref. 5, 9).

14.6.3 PROCUREMENT

Procurement activities are conducted to provide confidence that procured items and materials meet specified requirements and perform as expected. Procurement activities also include measures for selection and evaluation of suppliers to ensure they are capable of providing adequate quality of materials and services.

14.6.3.1 Procurement Program Definition

Procurement at the F/H Lab is performed in accordance with Manual 7B (Ref. 10). These procedures provide detailed methodology for preparing, reviewing, and approving purchase requisitions, amendments to requisitions, purchase specifications, bid packages, and other procurement documents.

14.6.3.2 Supplier Selection and Evaluation

Supplier selection and evaluation at the F/H Lab are performed in accordance with Manuals 1Q and 7B (Ref. 5, 10).

14.6.3.3 Product Acceptance

Purchased items or services at the F/H Lab are accepted in accordance with Manuals 1Q and 7B (Ref. 5, 10).

14.6.4 INSPECTION AND TESTING FOR ACCEPTANCE

Products, materials, services, and processes are inspected at specified intervals using established criteria to verify acceptability. This inspection and testing at the F/H Lab are performed in accordance with Manuals 1Q and 7B (Ref. 5, 10).

14.6.4.1 Measuring and Test Equipment

Measuring and test equipment, used in performance of inspections, is calibrated and controlled at the F/H Lab in accordance with site-level procedures and policies described in 1Q (Ref. 5).

14.6.5 ASSESSMENT

Safety Review and Performance Assessments, Management Assessments, Self Assessments and Independent Assessments are performed of the F/H Lab such that continuing review of the quality and technical performance of the organization is assured. These assessments provide a mechanism for identifying and correcting problems such that they do not adversely impact the organizational objectives.

14.6.5.1 Safety Review and Performance Assessments

Safety review and performance assessments at the F/H Lab are performed in accordance with site level procedures and policies Manual 12Q (Ref. 11).

14.6.5.2 Management Assessments and Self-Assessments

Management assessments and self-assessments at the F/H Lab are performed in accordance with site-level procedures and policies Manual 12Q and 1Q (Ref. 5, 11).

14.6.5.3 Independent Assessment

Independent assessments at the F/H Lab are performed in accordance with site-level procedures and policies Manual 12Q (Ref. 11). Assessments are conducted by individuals who are not directly responsible for the item, task, job, or work being assessed and who have sufficient authority and freedom from management to ensure independence. The individuals who are performing independent assessments are qualified per the training programs established by Manual 1Q (Ref 5).

14.7 REFERENCES

1. Nuclear Safety Management. Title 10 Energy, Code of Federal Regulations, Part 830, U.S. Department of Energy, Washington, DC, January 2006.

2. Savannah River Site DSA Support Document – Site Characteristics and Program Descriptions. Rev. 0, WSRC-IM-2004-00008, Westinghouse Savannah River Company, Aiken, SC, October 2004.

3. Quality Assurance. DOE Order 414.1C, U.S. Department of Energy, Washington, DC, June 2005.

4. Analytical Laboratories Standard Practices. Manual L2, Savannah River Nuclear Solutions, Aiken, SC.

5. Quality Assurance Manual. Manual 1Q, Savannah River Nuclear Solutions, Aiken, SC.

6. Management Requirements and Procedures. Manual 1B, Savannah River Nuclear Solutions, Aiken, SC.

7. Sitewide Records Inventory and Disposition Schedule (S/RIDS). WSRC-IM-93-0060, Washington Savannah River Company, Aiken, SC.

8. Quality Assurance Requirements. Code of Federal Regulations, 10 CFR, Part 830, Section 120, U.S. Government Printing Office, Washington, DC.

9. Conduct of Engineering. Manual E7, Savannah River Nuclear Solutions, Aiken, SC.

10. Procurement Management Manual. Manual 7B, Savannah River Nuclear Solutions, Aiken, SC.

11. Assessment Manual. Manual 12Q, Savannah River Nuclear Solutions, Aiken, SC.

12. Quality Assurance Management Plan. WSRC-RP-92-225, Washington Savannah River Company, Aiken, SC.

WSRC-SA-96-26
REV. 8

CENTRAL LABORATORY FACILITY -
BUILDINGS 772-F, 772-1F, AND 772-4F
SAFETY ANALYSIS REPORT

CHAPTER 15

EMERGENCY PREPAREDNESS PROGRAM

May 2010

Savannah River
Nuclear Solutions, LLC
A Fluor Daniel Partnership

DISCLAIMER

This document was prepared by Savannah River Nuclear Solutions LLC (SRNS), under contract with the United States Department of Energy (DOE).

Release to and Use by Third Parties. As it pertains to releases of this document to third parties, and the use of or reference to this document by such third parties in whole or in part, neither SRNS, DOE, nor their respective officers, directors, employees, agents, consultants or personal services contractors (i) make any warranty, expressed or implied, (ii) assume any legal liability or responsibility for the accuracy, completeness, or usefulness, of any information, apparatus, product or process disclosed herein or (iii) represent that use of the same will not infringe privately owned rights. Reference herein to any specific commercial product, process, or service by trademark, name, manufacture or otherwise, does not necessarily constitute or imply endorsement, recommendation, or favoring of the same by SRNS, DOE or their respective officers, directors, employees, agents, consultants or personal services contractors. The views and opinions of the authors expressed herein do not necessarily state or reflect those of the United States Government or any agency thereof.

CONTENTS

Page

15.0 EMERGENCY PREPAREDNESS PROGRAM 15.1-1

15.1 INTRODUCTION 15.1-1

15.2 REQUIREMENTS 15.2-1

15.3 SCOPE OF EMERGENCY PREPAREDNESS 15.3-1

15.3.1 Natural Disasters 15.3-1

15.3.2 Fires 15.3-1

15.3.3 Operational Emergencies 15.3-1

15.4 EMERGENCY PREPAREDNESS PLANNING 15.4-1

15.4.1 Emergency Response Organization 15.4-1

15.4.1.1 Normal Organization 15.4-1

15.4.1.2 Onsite Emergency Response Organization 15.4-1

15.4.2 Assessment Actions 15.4-5

15.4.2.1 Classification System 15.4-5

15.4.2.2 Hazardous Material Emergencies 15.4-5

15.4.2.3 Classification Responsibilities 15.4-6

15.4.3 Notification 15.4-6

15.4.3.1 Offsite Notifications 15.4-6

15.4.3.2 State/Local Authorities Notification for Radiological Material Releases 15.4-6

15.4.3.3 State/Local Authorities Notification for Events that do not Involve Radiological Material Releases 15.4-6

CONTENTS (Continued)

Page

15.4.3.4 Other Agencies 15.4-6

15.4.3.5 General Population 15.4-7

15.4.3.6 Onsite Notifications 15.4-7

15.4.3.7 Site Emergency Response Organization 15.4-7

15.4.3.8 Department of Energy Field and Headquarters Emergency Operations Center Notification 15.4-7

15.4.4 Emergency Facilities and Equipment 15.4-7

15.4.4.1 Emergency Facilities 15.4-7

15.4.4.2 Emergency Equipment 15.4-8

15.4.5 Protective Actions 15.4-9

15.4.5.1 Onsite Precautionary Actions 15.4-9

15.4.5.2 Onsite Protective Response 15.4-9

15.4.5.3 Decontamination 15.4-11

15.4.5.4 Access Control 15.4-11

15.4.5.5 Responsibility for Protective Actions 15.4-11

15.4.5.6 Protective Equipment and Supplies 15.4-11

15.4.5.7 Protective Action Guides 15.4-11

15.4.5.8 Emergency Response Planning Guidelines 15.4-11

15.4.5.9 Records 15.4-12

15.4.5.10 Personnel Accountability 15.4-12

15.4.5.11 Emergency Planning Zones 15.4-12

CONTENTS (Continued)

Page

15.4.5.12 Communication 15.4-12

15.4.5.13 Termination 15.4-12

15.4.5.14 Shutdown of Operations 15.4-12

15.4.6 Training and Exercises 15.4-12

15.4.7 Recovery and Reentry 15.4-12

15.4.7.1 Emergency Termination and Downgrade 15.4-12

15.4.7.2 Reentry 15.4-13

15.4.7.3 Recovery 15.4-13

15.5 REFERENCES 15.5-1

ACRONYMS AND ABBREVIATIONS

AEC	Area Emergency Coordinator
CR	Control Room
DOE	Department of Energy
DSA	Documented Safety Analysis
EDO	Emergency Duty Officer
EOC	Emergency Operations Center
EPHA	Emergency Planning Hazards Assessment
ERO	Emergency Response Organization
ESH&Q	Environment, Safety, Health and Quality
FEC	Facility Emergency Coordinator
F/H Lab	F/H Area Laboratory
RPD	Radiological Protection Department
SAE	Site Area Emergency
SAR	Safety Analysis Report
SOM	Shift Operations Manager
SRNS	Savannah River Nuclear Solutions
SRS	Savannah River Site
SRSOC	Savannah River Site Operations Center
TSR	Technical Support Room
WSRC	Washington Savannah River Company

15.0 EMERGENCY PREPAREDNESS PROGRAM

15.1 INTRODUCTION

The purpose of this chapter of the Safety Analysis Report (SAR) is to satisfy the requirements of Title 10, Code of Federal Regulations, Part 830, "Nuclear Safety Management" (Ref. 1) for Emergency Preparedness, as amplified by Department of Energy (DOE) Standard 3009 (Ref. 2).This chapter provides information on the Savannah River Site (SRS) Emergency Preparedness program that implements the responses to emergency conditions and the program requirements that govern emergency responses in the F/H Area Laboratory (F/H Lab). In addition, this chapter describes the philosophy, objectives, and organization of the Emergency Preparedness program for a wide spectrum of emergencies. This report is not intended to be the vehicle for review and approval of the Emergency Preparedness program, but is intended to describe the salient features of the program as it relates to the F/H Lab facilities Buildings 772-F, 772-1F, and 772-4F.

The overall Site Emergency Preparedness Program is described in the SRS Emergency Plan SCD-7, and the SRS Emergency Management Program Manual 6Q (Ref. 3, 4). This chapter describes the features of the program that are specific to the F/H Lab. Since many functions of the F/H Lab Emergency Response Organization (ERO) are performed by the F-Area ERO, many of the items discussed pertain to the Emergency Preparedness program for all of F-Area. Therefore, the equipment and supplies mentioned as being available for emergency response are not necessarily indicative of the types of hazards present in the F/H Lab. Those features of the F/H Lab Emergency Preparedness Program are the same as the site level Emergency Preparedness Program.

15.2 REQUIREMENTS

As stated in Section 15.2 of the SRS Documented Safety Analysis (DSA) Support Document, the Standards/Requirements Identification Documents state the codes, standards, and regulations governing the emergency preparedness policies and program elements of the SRS (Ref. 5). Programmatic compliance assessment are performed against the Standards/Requirements Identification Documents and documented as specified in the Savannah River Nuclear Solutions (SRNS) Manual 8B (Ref. 6).

The SRS Emergency Plan SCD-7 defines the appropriate response measures for the management of emergencies involving SRS (Ref. 3). The emergency plans specifics for F/H Lab are contained in SCD-7, Annex C.

15.3 SCOPE OF EMERGENCY PREPAREDNESS

The F/H Lab Emergency Plan is concerned with individual and organizational responses to a range of potential accidents, including hypothetical accidents with very low occurrence frequencies. The following sections summarize accidents that can result in release of significant amounts of radioactive and/or other hazardous material. These events and their consequences are described in detail in Chapter 3 of this SAR and in the F/H Lab Emergency Preparedness Hazards Assessment (EPHA) (Ref. 7).

15.3.1 NATURAL DISASTERS

Natural disasters with the potential to cause significant damage over the entire SRS include tornadoes, hurricanes, and earthquakes.

Due to the blast-resistant construction of Building 772-F, damage is not expected from high wind speeds below 137 mph. Damage from high winds is expected at 84 mph for Buildings 772-1F and 772-4F. Buildings 772-F and 772-4F have been judged to retain their integrity during an earthquake up to 0.2g. Damage is expected for Building 772-1F from an earthquake of this magnitude.

15.3.2 FIRES

The event determined to have the greatest risk (consequence vs. frequency) is a full facility fire in Building 772-F. From the EPHA for F/H Lab, emergency management of this event would require the declaration of a Site Area Emergency (SAE) based on radiological dose to co-located workers (Ref. 7). It has been shown that any credible fires occurring in F/H Lab facilities, while the confinement systems are functional, will not have any significant impact on co-located workers (Ref. 7).

15.3.3 OPERATIONAL EMERGENCIES

The SAEs identified for F/H Lab in the EPHA include both facility and transportation operational events. For the facility events that generated SAEs in the EPHA, the maximum radionuclide source terms were used, and for some events, credit was taken for building structures or High-Efficiency Particulate Air filtered exhaust operation. The events included facility fires and beyond design basis accidents. The remaining SAEs were transportation accidents involving B-25 low activity solid waste containers, transuranic solid waste containers, or a sample delivery truck. All used maximum allowable radionuclide source terms and assumed complete failure of the containers. The events included container fires, spills, and natural phenomena induced accidents.

15.4 EMERGENCY PREPAREDNESS PLANNING

15.4.1 EMERGENCY RESPONSE ORGANIZATION

15.4.1.1 Normal Organization

The operating organization for F/H Lab is described in Chapter 17. The F/H Lab Shift Operations Manager (SOM) is designated as the Area Emergency Coordinator (AEC) for protective actions for F Area personnel. Duties and responsibilities are described in SCD-7, Annex C. During an emergency event, the F/H Lab SOM is the designated Facility Emergency Coordinator (FEC) and has emergency classification responsibility for the F/H Lab. Should the SOM be unavailable the FEC responsibilities can be delegated to other qualified personnel such as a F/H Lab First Line Manager. The SOM will fill both the AEC/FEC role, if possible. In instances where the AEC or FEC is unable to classify an event for any reason, the site Emergency Duty Officer (EDO) provides assistance as needed.

The FEC is responsible for notifying personnel within the respective facilities, members of the facility ERO, and the EDO in the SRS Operations Center (SRSOC) of emergencies that fall within the classification system outlined in Section 15.4.2 of this SAR. Personnel are notified via safety alarms or voice announcement. F/H Lab emergency response personnel are notified by the same means. The site telephone system and personal contact serve as augmenting means of notification of F/H Lab personnel.

15.4.1.2 Onsite Emergency Response Organization

The site-level ERO includes personnel in the Emergency Operations Center (EOC), Command Room, Technical Support Room (TSR), Consequence Assessment Room, and Logistics Support Room. The site-level ERO, including functions and responsibilities, is described in the SRS Emergency Plan SCD-7 (Ref. 3).

Upon detection of an abnormality in F/H Lab, the FEC is immediately informed of the event. The FEC will review the situation, issue appropriate personnel protective action, contact the EDO, and classify the event if necessary. The F/H Lab Control Room (CR) and ERO are activated in accordance with emergency plan procedures to respond to the event. The F/H Lab CR is located in Building 772-1F serving as the primary CR. The alternate CR is in Building 772-F, Room 102. The FEC and AEC designates are described in Section 15.4.1.1 of this SAR.

The Radiological Protection Department (RPD) provides incident facility coordinator. The Protective Force Shift Lieutenant or designee assumes the duties and responsibilities for the Protective Force personnel during an emergency. The F-Area and F/H Lab ERO are described in Annex C of the SRS Emergency Plan SCD-7 (Ref. 3).

The typical responsibilities of the F/H Lab ERO are described below.

AREA EMERGENCY COORDINATOR RESPONSIBILITIES

- Determines and directs the implementation of appropriate area protective actions (i.e., remain indoors, relocation, evacuation, etc.)
- Provides overall direction and coordination of the area emergency response effort
- Interfaces with Wackenhut Services Incorporated to coordinate Protective Force emergency response with the overall Area emergency response and to advise of known hazardous conditions that may impact Wackenhut Services Incorporated personnel
- Confers with the F/H Lab EDO and concurs with classification or change in classification
- Periodically brief F-Area CRs on the status of the emergency and any significant events as they occur
- Ensures that timely announcements are made over the public address system concerning the emergency and significant events
- Designates communicator/logkeepers from the F/H Lab Control Room Staff.
- Initially dispatches emergency response teams

FACILITY EMERGENCY COORDINATOR RESPONSIBILITIES

- Classifies the emergency event and provides prompt notification, concurrence of the EDO of the emergency, classification and time of classification, or change of classification of an event
- Directs the implementation of the appropriate protective actions (i.e., sheltering, relocation, evacuation, remain indoors) for personnel in the incident facility. Advise the EDO on protective actions
- Dispatches emergency response teams
- Activates the F/H Lab CR for the Emergency
- Designates communicator/logkeepers from the F/H Lab ERO.
- Provides continuous review of facility conditions to the TSR, when activated, and recommends reclassification of the event if required
- Requests additional technical, engineering, material or manpower resources, as necessary, through the AEC, EDO or TSR manager
- Keeps the TSR Staff (or EDO if the TSR is not activated) and the AEC apprised of the facility activities
- Determines if authorization should be granted to emergency workers to exceed administrative (not DOE) exposure limits
- Provides for initial and continuous accountability for F/H Lab personnel and notifies the EDO/TSR of accountability results

- Periodically briefs the F/H Lab ERO on the status of the emergency and any significant events
- Directs the shutdown of F/H Lab operations during an emergency
- Coordinates the F/H Lab emergency response effort
- Performs additional tasks as directed by the AEC, TSR, and EDO

SAFETY AND HEALTH OPERATIONS COORDINATOR RESPONSIBILITIES

- Reports to the CR on hazards for the incident facility
- Forms and directs monitoring teams
- Coordinates with the TSR Coordinator and the AEC for assessment of hazardous materials and other health protection issues
- Provides guidance to the FEC on exposure protection controls for the Emergency Response Teams
- Provides personnel dosimetry for Emergency Response Teams
- Provides assistance as requested to the FEC in determining if emergency workers should be authorized to exceed administrative exposure limits
- Monitors CR habitability and advises the AEC/FEC of hazardous material exposure conditions
- Issues dosimetry

PROTECTIVE FORCE SHIFT LIEUTENANT RESPONSIBILITIES

- Interfaces with the AEC/FEC to coordinate protective force emergency response with the overall area/facility emergency response
- Provides for the physical security of the area/facility including access control
- Expedites the entry into the area of emergency response personnel and equipment as designated by the AEC/FEC
- Coordinates with RPD for health protection concerns for Protective Force personnel in the area
- Accounts for and directs the Protective Force Sergeant and staff
- Coordinates actions with the Wackenhut Security, Inc. SRSOC specialist
- Maintains communications with the AEC and Protective Forces, as necessary

EMERGENCY RESPONSE TEAM MEMBER RESPONSIBILITIES

- Attends team briefings and debriefings
- Obtains proper tools and equipment to complete assigned tasks
- Perform work tasks assigned by the FEC/AEC

INCIDENT SCENE COORDINATOR RESPONSIBILITIES

- Obtain briefing from the FEC/AEC
- Report to the incident scene via a safe route, assume command and control, assess situation and report it to the FEC/AEC
- Identify and request, through the FEC/AEC, emergency teams, equipment, and manpower to initiate mitigation actions
- Coordinate activities at the incident scene with the FEC/AEC
- Brief personnel as they arrive on the incident scene and rotate individuals out of the incident area based on work difficulty and RPD monitoring
- Establish interface with support group leads at the scene
- Upon arrival of the Fire Department Incident Commander, provide briefing of actions taken, status of the facility, transfer command of mitigation efforts to the Fire Department Incident Commander and continue to provide support to the Incident Commander through the FEC/AEC
- Keep FEC/AEC continually informed of the incident scene status
- Upon completion of the mitigation efforts, provide the FEC/AEC a report of actions taken, effectiveness and status of scene.

COMMUNICATIONS/LOG KEEPER RESPONSIBILITIES

- Communicates information slowly and clearly to ensure accuracy
- Monitors communications for misinformation or inaccuracies
- Draws attention to important information as it becomes available
- Record, by time and date, critical information regarding operational changes, protective actions, key decisions, personnel status, and important calculations that are transmitted over the telephone, or that occur in the F/H Lab CR
- Assists with gathering records and forms generated during the emergency
- Receive accountability reports
- Identify missing or unaccounted personnel to the FEC/AEC

ACCOUNTABILITY / RALLY POINT COORDINATOR RESPONSIBILITIES

- Coordinate protective actions/accountability of personnel at the rally point with the AEC, FEC, EDO, and Protective Force Lieutenant
- Receive accountability reports
- Identify missing or unaccounted personnel to the FEC/AEC
- Coordinate protective actions/accountability of personnel at the rally point with the AEC, FEC, EDO, and Protective Force Lieutenant

STATUS BOARD KEEPER RESPONSIBILITIES

- Update and maintain all status boards and maps in the CR
- Ensure critical information is correctly recorded both on the status boards and status board sheets
- Ensure CR personnel sign-in on the sign-in log and status board

15.4.2 ASSESSMENT ACTIONS

This section identifies the emergency classification system used at F/H Lab and relates the classification system to the emergencies arising from the accidents, natural disasters, or security incidents presented in the F/H Lab EPHA (Ref. 7). The notification, coordination, and information to be communicated are also summarized in this section. The source terms were derived in the F/H Lab EPHA (Ref. 7). The methodology and computer models used to assess the consequences from these emergencies are described in Section 7 of the F/H Lab EPHA (Ref. 7). Since only radiological releases from F/H Lab resulted in emergencies, HOTSPOT was the only computer model used for dose assessment. Real time event consequence assessment can also be performed when the site level response facilities are activated using the computer models and methodologies described in the SRS Emergency Plan (Ref. 3).

15.4.2.1 Classification System

The FEC will review the event against the criteria derived from the F/H Lab EPHA (Ref. 7). The event will then be classified using Emergency Action Levels specific to F/H Lab.

15.4.2.2 Hazardous Material Emergencies

There are three levels of emergency classification established for hazardous material releases at SRS. They are as follows:

- Alert
- SAE

- General Emergency

The F/H Lab EPHA provides a detailed description of the criteria for each of the classification levels (Ref. 7).

Until site level emergency response facilities are activated, the EDO is responsible for categorizing operational emergencies not within a facility or operational area boundary.

For an Onsite Transfer of hazardous materials, the EDO is responsible for categorizing and classifying Manual 19Q transportation accidents that occur within the facility boundary, in coordination with the AEC/FEC and in accordance with facility classification procedures (Ref. 8).

15.4.2.3 Classification Responsibilities

The FEC is responsible for notifying the SRSOC of the event and for classifying an event within F/H Lab. The EDO is responsible for classifying an event for the general site until the EOC is activated. The responsibilities for security event classification and for event classification after activation of the TSR and EOC are described in the SRS Emergency Plan SCD-7 (Ref. 3).

15.4.3 NOTIFICATION

This section provides information on the notification processes and the communications systems used in the event of an emergency at SRS.

15.4.3.1 Offsite Notifications

Notification of offsite organizations and agencies is described in SCD-7, SRS Emergency Plan (Ref. 3).

15.4.3.2 State/Local Authorities Notification for Radiological Material Releases

Notification of state/local authorities is described in SCD-7, SRS Emergency Plan (Ref. 3).

15.4.3.3 State/Local Authorities Notification for Events that do not Involve Radiological Material Releases

Notification of state/local authorities is described in SCD-7, SRS Emergency Plan (Ref. 3).

15.4.3.4 Other Agencies

Notification of other agencies is described in SCD-7, SRS Emergency Plan (Ref. 3).

15.4.3.5 General Population

Notification of the general population is described in SCD-7, SRS Emergency Plan (Ref. 3).

15.4.3.6 Onsite Notifications

The FEC is responsible for notifying personnel within the respective facilities, members of the facility ERO, and the EDO in the SRSOC of emergencies that fall within the classification system outlined in Section 15.4.2 of this SAR. Personnel are notified via Safety Alarms or voice announcement. F/H Lab emergency response personnel are notified by the same means. The site telephone system and personal contact serve as backup means of notification of F/H Lab personnel. The FEC is responsible for onsite followup notifications via the same lines of communications used for initial notifications.

15.4.3.7 Site Emergency Response Organization

Activation of the Site ERO is described in SCD-7, SRS Emergency Plan (Ref. 3).

15.4.3.8 Department of Energy Field and Headquarters Emergency Operations Center Notification

Notification of DOE field and headquarters is described in SCD-7, SRS Emergency Plan (Ref. 3).

15.4.4 EMERGENCY FACILITIES AND EQUIPMENT

15.4.4.1 Emergency Facilities

Site-level emergency response facilities have been pre-designated and equipped for use in an emergency. Refer to SCD-7, SRS Emergency Plan for a description of facilities and equipment used in an emergency (Ref. 3).

DECONTAMINATION FACILITIES

The F/H Lab decontamination room is located in Building 772-F.

If an incident of chemical contamination occurs within the facility that is beyond the scope of facility personnel to contain, the Emergency Duty Officer will be requested to dispatch the SRS Hazardous Material Team to perform chemical decontamination and mitigation of the accident, as appropriate.

CONTROL ROOM

The CR is located in 772-1F. From this room, the Radiological Control Operations group is requested to determine what protective equipment/clothing is required at the incident scene.

15.4.4.2 Emergency Equipment

Emergency equipment used in F/H Lab during an emergency event is as follows:

COMMUNICATIONS EQUIPMENT

Communication equipment, construction equipment, rescue equipment, and firefighting equipment available to F/H Lab for emergency response are discussed in SCD-7, SRS Emergency Plan (Ref. 3).

DECONTAMINATION EQUIPMENT

Decontamination areas and equipment available to personnel in F/H Lab are maintained by operations personnel and RPD.

RESCUE/FIRST AID TEAM EQUIPMENT

The SRS Fire Department maintains all rescue equipment that would be used at the F/H Lab per Manual 2Q (Ref. 9). Emergency cabinets located throughout F-Area (none are located directly in the F/H Lab facilities) contain dedicated emergency equipment such as medical first aid kits, gloves, flashlights and batteries, blankets, chemical suits and rubber boots, etc., for use by the Emergency Response Teams or other essential personnel during an emergency. More information on the location and contents of these cabinets is provided in the F-Area Annex to the SRS Emergency Plan SCD-7 (Ref. 3).

PERSONNEL PROTECTION EQUIPMENT

Personnel protection equipment typically includes personnel protective clothing, rubber gloves, Kevlar gloves, respirators, flashlights, batteries, Caution tags, and rope.

GAS AND LIQUID MONITORING EQUIPMENT

F/H Lab has alpha and beta/gamma activity monitors on the 772-4F and 772-1F exhaust stacks with alarms in the CR, and alarms with recorders in the 772-1F Radiological Control Operations office.

EMERGENCY POWER EQUIPMENT

F/H Lab has four standby diesels (not qualified as emergency diesels), which may supply temporary power to F/H Lab facilities in the event of a power loss. In addition, battery-powered emergency lighting is provided throughout the F/H Lab facilities.

LOGISTIC SUPPORT EQUIPMENT

The CR is equipped with status boards and maps for use in an emergency. Controlled copies of emergency preparedness procedures are available in the CR and alternate CR. Weather information is available from the EDO at the SRS EOC.

15.4.5 PROTECTIVE ACTIONS

This section describes the equipment, procedures, and response actions necessary to provide maximum protection for onsite personnel and the offsite populace.

15.4.5.1 Onsite Precautionary Actions

Visitors to the F/H Lab during an emergency event requiring sheltering or remain indoors or if a severe weather announcement is issued will be assisted by their escorts in implementing appropriate actions.

15.4.5.2 Onsite Protective Response

Personnel are notified via Safety Alarms or voice announcement. F/H Lab emergency response personnel are notified by the same means. The site telephone system and personal contact serve as backup means of notification of facility personnel. Notification of other site personnel and associated protective actions are described in SCD-7, SRS Emergency Plan (Ref. 3).

If protective actions for F/H Lab personnel are required during an emergency, the FEC would consult with the AEC and EDO for implementation. The following are protective actions that may be taken.

REMAIN IN DOORS

Remaining indoors is the default protective action specific for suspected releases or releases posing an immediate danger. Non-essential personnel within a facility will remain inside. Non-essential personnel outdoors will enter the nearest building for personnel protection. Outside doors and windows shall be closed and ventilation systems that draw in outside air will be shutdown, unless such action creates a health and safety hazard. Essential personnel shall report to their assigned emergency response locations unless otherwise directed or if it is unsafe to do so.

SHELTERING

All F/H Lab non-essential personnel will enter 772 -F, which is designated as the shelter protection building. F/H Lab essential personnel will report to their assigned emergency response locations unless otherwise directed.

EVACUATION

Non-essential personnel will be directed to proceed to one of the predesignated evacuation rally points. The selection of the rally point to be used will be made by the FEC/AEC. Wind direction and hazardous material release status (imminent or in progress) will guide the FEC/AEC in deciding which rally point to use. Normal access gates may be used to reach the rally point. Area essential personnel will report to their assigned emergency response locations unless otherwise directed.

RELOCATION

Non-essential personnel will be directed to proceed to one of the evacuation rally points. From there personnel would be transported out of the area to another SRS location. Relocation is normally directed by the EDO or the Emergency Director in the EOC in coordination with the AEC. F/H Lab essential personnel would report to their assigned emergency response locations unless otherwise directed.

PERSONNEL ACTIONS FOR SECURITY-RELATED INCIDENTS

Protective actions for a security event will be determined by the Protective Force Lieutenant in H Area and will be transmitted to the AEC/FEC for implementation.

EXPOSURE CONTROL

Non-Essential Workers

In an emergency non-essential workers remain indoors, take shelter, or relocate to another area onsite in support of the As Low As Reasonably Achievable concept.

Radiological Exposures - Essential Workers

Guidelines for radiological exposure are described in SCD-7, SRS Emergency Plan (Ref. 3).

Chemical Exposures - Essential Workers

Guidelines for chemical exposure are described in SCD-7, SRS Emergency Plan (Ref. 3).

15.4.5.3 Decontamination

If a radiological or chemical release occurs, all potentially contaminated people are monitored at the rally point, alternate rally point, assembly area, or remote rally point by Radiological Control Operations personnel. Radiological Control Operations determines appropriate decontamination measures. For toxic chemical situations, exposed people are directed to a safety shower or transported to a medical facility immediately. Essential workers are monitored on an ongoing basis and decontaminated as warranted by circumstances. Additional information on decontamination is provided in SCD-7, SRS Emergency Plan (Ref. 3).

15.4.5.4 Access Control

Access control and restrictions are described in SCD-7, SRS Emergency Plan (Ref. 3).

15.4.5.5 Responsibility for Protective Actions

If a protective action guide is exceeded in F/H Lab only, the FEC/AEC has the non-delegable responsibility for determining and directing appropriate protective actions within the facility and F Area. The AEC/FEC shall coordinate protective actions with the EDO in the SRSOC. The responsibility for determining protective actions beyond the area fence is described in SCD-7, SRS Emergency Plan (Ref. 3).

15.4.5.6 Protective Equipment and Supplies

Protective equipment and supplies typically include personnel protective clothing, rubber gloves, Kevlar gloves, respirators, flashlights, batteries, CAUTION tags, and rope.

Specialized protection equipment such as acid suits, acid boots, and Scott Air Paks are available at the Operations Support Center.

15.4.5.7 Protective Action Guides

Protective action guides applicable to F/H Lab are described in SCD-7, SRS Emergency Plan (Ref. 3).

15.4.5.8 Emergency Response Planning Guidelines

Emergency Response Planning Guidelines applicable to F/H Lab are described in SCD-7, SRS Emergency Plan (Ref. 3).

15.4.5.9 Records

The requirements for records related to the Emergency Preparedness program are described in SCD-7, SRS Emergency Plan (Ref. 3).

15.4.5.10 Personnel Accountability

All personnel in the F/H Lab shall be accounted for during an emergency requiring the protective action of sheltering or evacuation. The Accountability Coordinator and facility supervision accounts for their personnel and reports the results to the log keeper/communicator who informs the FEC of accountability status. Visitors to the area are accountable through review of the visitor's log. If necessary, the FEC/AEC will request the AEC to activate response resources as required to search for missing personnel.

15.4.5.11 Emergency Planning Zones

The Emergency Planning Zones for SRS are defined in SCD-7, SRS Emergency Plan (Ref. 3).

15.4.5.12 Communication

Communications with offsite authorities is described in SCD-7, SRS Emergency Plan (Ref. 3).

15.4.5.13 Termination

Emergency termination is described in SCD-7, SRS Emergency Plan (Ref. 3).

15.4.5.14 Shutdown of Operations

Shutdown of operations is described in SCD-7, SRS Emergency Plan (Ref. 3).

15.4.6 TRAINING AND EXERCISES

Training and exercises for the Emergency Preparedness Program at F/H Lab are as described in SCD-7, SRS Emergency Plan (Ref. 3).

15.4.7 RECOVERY AND REENTRY

15.4.7.1 Emergency Termination and Downgrade

With the approval of the EDO, the FEC may terminate from the emergency by procedure or discretion if the site-level emergency response facilities have not been activated. If the SRS EOC has been activated, it is the responsibility of the Emergency Director in the EOC to

terminate the emergency in accordance with the criteria described in the SRS Emergency Plan SCD-7 (Ref. 3).

15.4.7.2 Reentry

Reentry may be performed during an emergency event to rescue personnel, secure critical equipment, assess the event, and perform mitigating actions. Emergency reentries are governed by exposure control considerations. Reentry activities for recovery operations are described in SCD-7, SRS Emergency Plan (Ref. 3).

15.4.7.3 Recovery

Recovery from an event includes those actions necessary to restore an incident site and surrounding environs to pre-emergency or safe condition. SCD-7, SRS Emergency Plan describes the process for developing recovery plans (Ref. 3).

15.5 REFERENCES

1. Nuclear Safety Management. Title 10 Energy, Code of Federal Regulations, Part 830, U.S. Department of Energy, Washington, DC, January 2006.

2. Preparation Guide for US Department of Energy Nonreactor Nuclear Facility Safety Analysis Reports. DOE-STD-3009-94, CN3, U.S. Department of Energy, Washington, DC, March 2006.

3. Savannah River Site Emergency Plan. Manual SCD-7, Westinghouse Savannah River Company, Aiken, SC.

4. SRS Emergency Management Program Manual. Manual 6Q, Savannah River Nuclear Solutions, Aiken, SC.

5. Savannah River Site DSA Support Document – Site Characteristics and Program Descriptions. Rev. 0, WSRC-IM-2004-00008, Westinghouse Savannah River Company, Aiken, SC, October 2004.

6 Compliance Assurance Manual. Manual 8B, Savannah River Nuclear Solutions, Aiken, SC, January 2000.

7. Atkinson, K.W., Emergency Preparedness Hazards Assessment for the Central Laboratory Buildings 772-F, 772-1F, AND 772-4F. S-EHA-F-00001, Rev. 6, Washington Safety Management Solutions, Aiken, SC, April 2007.

8. Transportation Safety. Manual 19Q, Savannah River Nuclear Solutions, Aiken, SC.

9. Fire Protection Program Manual. Manual 2Q, Savannah River Nuclear Solutions, Aiken, SC.

WSRC-SA-96-26
REV. 8

CENTRAL LABORATORY FACILITY -
BUILDINGS 772-F, 772-1F, AND 772-4F
SAFETY ANALYSIS REPORT

CHAPTER 16

PROVISIONS FOR DECONTAMINATION AND DECOMMISSIONING

May 2010

Savannah River
Nuclear Solutions, LLC
A Fluor Daniel Partnership

DISCLAIMER

This document was prepared by Savannah River Nuclear Solutions LLC (SRNS), under contract with the United States Department of Energy (DOE).

Release to and Use by Third Parties. As it pertains to releases of this document to third parties, and the use of or reference to this document by such third parties in whole or in part, neither SRNS, DOE, nor their respective officers, directors, employees, agents, consultants or personal services contractors (i) make any warranty, expressed or implied, (ii) assume any legal liability or responsibility for the accuracy, completeness, or usefulness, of any information, apparatus, product or process disclosed herein or (iii) represent that use of the same will not infringe privately owned rights. Reference herein to any specific commercial product, process, or service by trademark, name, manufacture or otherwise, does not necessarily constitute or imply endorsement, recommendation, or favoring of the same by SRNS, DOE or their respective officers, directors, employees, agents, consultants or personal services contractors. The views and opinions of the authors expressed herein do not necessarily state or reflect those of the United States Government or any agency thereof.

CONTENTS

Page

16.0 PROVISIONS FOR DECONTAMINATION AND DECOMMISSIONING 16.1-1

16.1 INTRODUCTION 16.1-1

16.1.1 Objective 16.1-1

16.1.2 Scope 16.1-1

16.2 REQUIREMENTS 16.2-1

16.3 DESCRIPTION OF CONCEPTUAL PLANS 16.3-1

16.3.1 Design Features 16.3-1

16.3.2 Operational Considerations 16.3-2

16.3.3 Closure of F/H Lab 16.3-3

16.3.4 Final Facility Status 16.3-3

16.3.5 Post-Decommissioning Activities 16.3-4

16.4 REFERENCES 16.4-1

ACRONYMS AND ABBREVIATIONS

ALARA	As Low As Reasonably Achievable
CFR	Code of Federal Regulations
D&D	Decontamination and Decommissioning
DOE	Department of Energy
F/H Lab	F/H Area Laboratory
SAR	Safety Analysis Report
SRNS	Savannah River Nuclear Solutions
SRS	Savannah River Site
WSRC	Washington Savannah River Company

16.0 PROVISIONS FOR DECONTAMINATION AND DECOMMISSIONING

16.1 INTRODUCTION

This chapter provides information on the Decontamination and Decommissioning (D&D) program as it applies to the F/H Area Laboratory (F/H Lab) (Buildings 772-F, 772-1F, and 772-4F) at the Savannah River Site (SRS). This chapter discusses the design features and operational considerations related to D&D and provides a description of the D&D conceptual plans. This chapter is intended to describe the salient features of the program based upon the graded approach (i.e., minimum description of the provisions and requirements for facilities with minimum hazards encountered during the D&D phase, which is the case with the F/H Lab).

16.1.1 OBJECTIVE

This chapter provides information that satisfies the requirements of Title 10 Code of Federal Regulations (CFR) 830 Nuclear Safety Management (Ref. 1), as amplified in DOE-STD-3009, pertaining to the F/H Lab (Ref. 11).

The conceptual plans are identical for Buildings 772-F, 772-1F, and 772-4F.

16.1.2 SCOPE

The D&D conceptual plans for the F/H Lab, described in this chapter, include the following:

- Design features
- Operational considerations
- Closure
- Final status
- Post-decommissioning activities

16.2 REQUIREMENTS

Decontamination and Decommissioning (D&D) operations are considered to be a waste generator; therefore, the D&D conceptual plan must meet the requirements of DOE Order 435.1, the DOE Decommissioning Handbook, and South Carolina Hazardous Waste Management Regulations (Ref. 2, 3, 4).

These requirements form the safety basis and the reason for implementing the D&D conceptual plan at the F/H Lab. The following Savannah River Nuclear Solutions (SRNS) documents specify codes, standards, regulations, and DOE Orders, as well as other site documents, that govern the policies and programs for the D&D conceptual plan for the F/H Lab:

- Management Policy (MP) 5.24 of 1-01 (Ref. 5)
- Manual 1B (Ref. 6)
- Manual 3Q (Ref. 7)

16.3 DESCRIPTION OF CONCEPTUAL PLANS

In accordance with the requirements of DOE Order 435.1 and DOE Radioactive Waste Management Manual DOE-M-435.1-1, planning for D&D of the F/H Lab will be initiated prior to termination of F/H Lab operations (Ref. 2, 8). A formal D&D plan will be developed prior to initiation of F/H Lab closure. The decommissioning plan will be developed to comply with applicable federal and State of South Carolina requirements and regulations, as well as to provide information relevant to decommissioning project planning.

DOE Order 435.1 and the DOE Decommissioning Handbook provide guidance on the development of decommissioning plans (Ref. 2, 3). Any changes in the mission of the F/H Lab will be evaluated relative to design and administrative features for facilitating D&D activities. D&D of the F/H Lab may eventually be carried out for F/H Lab Buildings 772-F, 772-1F, and 772-4F as one entity, or separately as required by future mission changes.

D&D operations will be conducted per the requirements of MP 5.24 in a manner that will minimize waste generation and potential worker exposure (Ref. 5). To minimize potential risks to the workers arising from D&D operations, the D&D plan will include a review of the Occurrence Reporting and Processing System (ORPS) (Ref. 12). This database provides an ongoing historical listing of accidents and abnormal events that have occurred at the F/H Lab that may impact D&D activities.

The D&D project organization will designate a facility custodian responsible for the following (Ref. 10):

- Reducing potential hazards to the public and environment
- Meeting applicable standards for radiation protection, hazardous chemical, and safety
- Maintaining security and physical safety
- Ensuring adequate surveillance and maintenance
- Reporting occurrences
- Decommissioning

Waste generated during decontamination activities will be managed by existing administrative and operational practices and procedures for handling radioactive and hazardous wastes at the F/H Lab, as addressed in Chapter 9 of this Safety Analysis Report (SAR).

16.3.1 DESIGN FEATURES

Existing design features that will facilitate D&D activities at the F/H Lab include, but are not limited to, the following:

- The main exhaust system filters airborne contaminants both prior to and during D&D operations.

- The off gas exhaust system filters airborne contaminants both prior to and during D&D operations.
- Surfaces most likely to become contaminated are painted, made of metal, or covered with metal.
- Containment units such as gloveboxes, hoods, and radiobenches are made of glass and steel to facilitate decontamination.
- Modular design and placement of structures, systems, and components most likely to become contaminated allow for ease of decontamination and removal.

Design reviews conducted during future F/H Lab modifications will also identify areas for D&D project team consideration when preparing the D&D plan. Controlled design documents, including as-built drawings, are available at site document control centers to assist project personnel with planning, revising, and implementing D&D activities.

16.3.2 OPERATIONAL CONSIDERATIONS

Operational considerations facilitating future D&D activities include the following:

- The spread of radioactive contamination is prevented when possible and controlled when necessary by adherence to operational and maintenance procedures and practices intended to prevent the spread of radioactive contamination.
- Nuclear Material Accountability database maintains tracking of nuclear material including residual holdup (Ref. 13).
- Radioactive contamination is removed when it is practical and necessary to do so.
- The main exhaust systems will filter radioactive contaminants that may become airborne during the decontamination activities. Removal of airborne contaminants will be facilitated because any accumulation in the main exhaust system ducts can be easily removed (e.g., disassembly of ducting or piping) as discrete hardware segments.

The F/H Lab will not present any significant or unusual D&D concerns because all radioactive and hazardous wastes generated at the F/H Lab are administratively and procedurally controlled during normal operations, as addressed in Chapter 9 of this SAR. All radioactive and hazardous materials brought into the F/H Lab are procedurally identified and managed.

The F/H Lab does not contain facilities for permanent storage of radioactive and hazardous waste. Prior to D&D activities, all radioactive and hazardous materials will be de-inventoried, which could potentially reduce the hazard category rating of the F/H Lab significantly. All radioactive and hazardous waste located at the interim storage and staging areas of the F/H Lab will be removed prior to the start of D&D activities.

During F/H Lab operation, programs such as the following would reveal areas of concern to the D&D project team while preparing the D&D plan:

- Occupational Safety and Health Administration compliance reviews

- Routine safety audits
- Periodic safety inspections
- Incident investigations
- Annual safety program reviews
- The SRS quality assurance program

The ORPS database would provide input regarding the operational history of the F/H Lab that may be required by the D&D project team (Ref. 12).

16.3.3 CLOSURE OF F/H LAB

The F/H Lab deactivation/decommissioning plan will include the following requirements:

- Direct radiation exposure to personnel will be kept to a minimum by implementing As Low As Reasonably Achievable (ALARA) practices.
- All radioactive, mixed, and hazardous waste will be removed from the F/H Lab. (Asbestos used in insulation and in ceiling or wall panels, metallic lead used in permanent shielding applications, and any other permanently installed hazardous materials may not be removed unless it is cost effective.) Radiological and hazardous materials will be de-inventoried to reduce the hazard category of the facilities to the maximum extent possible.
- As a minimum, all exterior surfaces of equipment and process areas will be decontaminated to the fullest extent possible or to the levels normally required. This process will enable normal contact maintenance, dismantling activities, and the removal of contaminated equipment with minimum radiological risks to D&D personnel. All decontamination activities will be performed before the equipment is removed from the present locations.
- Chemical and radioactive materials will be removed as modules are shut down.
- Any material hazardous to the structural integrity of the F/H Lab will be removed.

16.3.4 FINAL FACILITY STATUS

The decommissioning option selected for the F/H Lab will be included in the decommissioning plan. Some of the decommissioning alternatives selected may include the following:

- Dismantling F/H Lab Buildings 772-F, 772-1F, and 772-4F
- Reusing F/H Lab Buildings 772-F, 772-1F, and 772-4F for other missions that may or may not involve radioactive or hazardous materials
- Placing F/H Lab Buildings 772-F, 772-1F, and 772-4F in safe storage. If this alternative is selected, necessary long-term maintenance and surveillance or other safety controls will be addressed.

16.3.5 POST-DECOMMISSIONING ACTIVITIES

After D&D operations have been completed, a final radiological and chemical survey report and a project final report will be prepared. The final report will include a description of the project, final status of the F/H Lab, and the lessons learned from the project.

A project data package consisting of the record of completion, the final radiological and chemical survey report, and the project final report will be compiled and retained in archival records.

16.4 REFERENCES

1. Nuclear Safety Management. Title 10 Energy, Code of Federal Regulations, Part 830, U.S. Department of Energy, Washington, DC, January 2006.

2. Radioactive Waste Management. DOE Order 435.1, U.S. Department of Energy, Washington, DC, July 1999.

3. Decommissioning Handbook. EM-0142P, U.S. Department of Energy, Washington, DC, March 1994.

4. South Carolina Hazardous Waste Management Regulations. Promulgated Pursuant to Sections 44-56-10 through 44-56-510 of the 1976 South Carolina Code of Laws, Columbia, SC.

5. Policy Manual. 1-01, MP 5.24, "Facility Disposition," Savannah River Nuclear Solutions, Aiken, SC.

6. Management Requirements and Procedures. Manual 1B, Savannah River Nuclear Solutions, Aiken, SC.

7. Environmental Compliance Manual. Manual 3Q, Savannah River Nuclear Solutions, Aiken, SC.

8. Radioactive Waste Management Manual. DOE Manual 435.1-1, U.S. Department of Energy, Washington, DC, July 1999.

9. Deleted

10. Decontamination and Decommissioning. WSRC-TR-94-0178, Rev. 0, Westinghouse Savannah River Company, Aiken, SC, March 1994.

11. Preparation Guide for US Department of Energy Nonreactor Nuclear Facility Safety Analysis Reports. DOE-STD-3009-94, CN3, U.S. Department of Energy, Washington, DC, March 2006.

12. Site Item Reportability and Issues Management (SIRIM) Manual. Manual 9B, Savannah River Nuclear Solutions, Aiken, SC.

13. Material Control and Accountability Manual. Manual 14Q, Savannah River Nuclear Solutions, Aiken, SC.

CENTRAL LABORATORY FACILITY -
BUILDINGS 772-F, 772-1F, AND 772-4F
SAFETY ANALYSIS REPORT

CHAPTER 17

MANAGEMENT, ORGANIZATION, AND INSTITUTIONAL SAFETY PROVISIONS

May 2010

Savannah River
Nuclear Solutions, LLC
A Fluor Daniel Partnership

DISCLAIMER

This document was prepared by Savannah River Nuclear Solutions LLC (SRNS), under contract with the United States Department of Energy (DOE).

Release to and Use by Third Parties. As it pertains to releases of this document to third parties, and the use of or reference to this document by such third parties in whole or in part, neither SRNS, DOE, nor their respective officers, directors, employees, agents, consultants or personal services contractors (i) make any warranty, expressed or implied, (ii) assume any legal liability or responsibility for the accuracy, completeness, or usefulness, of any information, apparatus, product or process disclosed herein or (iii) represent that use of the same will not infringe privately owned rights. Reference herein to any specific commercial product, process, or service by trademark, name, manufacture or otherwise, does not necessarily constitute or imply endorsement, recommendation, or favoring of the same by SRNS, DOE or their respective officers, directors, employees, agents, consultants or personal services contractors. The views and opinions of the authors expressed herein do not necessarily state or reflect those of the United States Government or any agency thereof.

CONTENTS

Page

17.0 MANAGEMENT, ORGANIZATION, AND INSTITUTIONAL SAFETY PROVISIONS1

17.1 INTRODUCTION 17.1-1

17.1.1 OBJECTIVE 17.1-1

17.1.2 SCOPE 17.1-1

17.2 REQUIREMENTS 17.2-1

17.3 ORGANIZATIONAL STRUCTURE, RESPONSIBILITIES, AND INTERFACES 17.3-1

17.3.1 ORGANIZATIONAL STRUCTURE 17.3-1

17.3.2 ORGANIZATIONAL RESPONSIBILITIES 17.3-1

17.3.2.1 Management Staff 17.3-1

17.3.2.2 Technical and Engineering Support, Maintenance, and Modifications 17.3-1

17.3.2.3 Safety Issue Discovery, Communication, Management, and Resolution 17.3-1

17.3.2.4 Independent Safety Review, Audit, and Compliance Determination 17.3-2

17.3.2.5 Savannah River National Laboratory 17.3-2

17.3.2.6 Support Services 17.3-2

17.3.3 Staffing and Qualifications 17.3-2

17.3.3.1 Certified Personnel 17.3-2

17.3.3.2 Qualified Personnel 17.3-3

17.4 SAFETY MANAGEMENT POLICIES AND PROGRAMS 17.4-1

17.4.1 SAFETY REVIEW AND PERFORMANCE ASSESSMENT 17.4-1

17.4.2 CONFIGURATION AND DOCUMENT CONTROL..... 17.4-2

17.4.2.1 Configuration Management 17.4-2

17.4.2.2 Management Requirements and Procedures for Document Control..... 17.4-2

17.4.2.3 Quality Assurance..... 17.4-2

17.4.3 OCCURRENCE REPORTING 17.4-3

17.4.4 Safety Culture 17.4-3

17.5 REFERENCES 17.5-1

ACRONYMS AND ABBREVIATIONS

AL	Analytical Laboratories
CFR	Code of Federal Regulations
DOE	Department of Energy
DSA	Documented Safety Analysis
ES&H	Environmental, Safety, & Health
F/H Lab	F/H Area Laboratory
SAR	Safety Analysis Report
SRNS	Savannah River Nuclear Solutions
SRS	Savannah River Site
WSRC	Washington Savannah River Company

17.0 MANAGEMENT, ORGANIZATION, AND INSTITUTIONAL SAFETY PROVISIONS

17.1 INTRODUCTION

17.1.1 OBJECTIVE

The purpose of this chapter of the Safety Analysis Report (SAR) for the F/H Area Laboratory (F/H Lab) is to provide information that satisfies Title 10 Code of Federal Regulations (CFR) 830 Nuclear Safety Management (Ref. 1). Chapter 17 of the Savannah River Site (SRS) Documented Safety Analysis (DSA) Support Document covers the objective of this chapter and presents information demonstrating that the following conditions exist (Ref. 2):

- The operations organization is part of a network of supporting management, technical, and other support functions.
- The network is sufficient to ensure that hazards and safety issues are identified, communicated, evaluated, resolved, and documented.

17.1.2 SCOPE

Chapter 17 of the SRS DSA Support Document discusses the scope of this chapter and presents information on management, technical, and other organizations that support safe facility operation not described elsewhere in this SAR (Ref. 2). The products of this chapter are descriptions of the following items:

- The overall structure of the F/H Lab organizations and entities involved in safety-related functions not described elsewhere in this SAR, including key responsibilities and interfaces
- The F/H Lab safety programs that promote safety consciousness and morale, including safety review and performance assessment, configuration and document control, occurrence reporting, and safety culture

17.2 REQUIREMENTS

The Savannah River Nuclear Solutions (SRNS) management, organizational, and institutional safety provisions are designed to comply with requirements that form the safety basis of each facility at the Savannah River Site, including the F/H Lab. As described in Chapter 17 of the SRS DSA Support Document, the following SRNS documents specify codes, standards, regulations, as well as other site documents that govern the safety management policies and programs addressed in this chapter (Ref. 2): 1-01 and Manuals 1B, 7E, and 4B (Ref. 3, 4, 5, 6).

The F/H Lab uses a graded approach in complying with site-level safety management policies and programs. Applicable site-level safety management policies and programs are implemented at F/H Lab facilities so that available resources are used efficiently and produce maximum benefit.

17.3 ORGANIZATIONAL STRUCTURE, RESPONSIBILITIES, AND INTERFACES

17.3.1 ORGANIZATIONAL STRUCTURE

The F/H Lab facility is located in F Area of SRS and is operated by the Analytical Laboratories (AL) Project Area of SRNS. The latest revision of the Analytical Laboratories Organization Chart provides a detailed listing of the AL organization and support functions (Ref. 14).

17.3.2 ORGANIZATIONAL RESPONSIBILITIES

Chapter 17 of the SRS DSA Support Document provides the SRNS overall organizational responsibilities in terms of the interrelationships with other SRNS organizations (Ref. 2).

17.3.2.1 Management Staff

AL-level procedures (i.e., "L" Series Manuals: L2 and L2-1) include the responsibilities of AL discipline managers and their support staff and provide specific instructions on the performance of many of these responsibilities (Ref. 8, 9). The Analytical Laboratories Organization Chart provides an overview and summary of the Structure of the entire organization (Ref. 14).

17.3.2.2 Technical and Engineering Support, Maintenance, and Modifications

Routine engineering and support services are provided by F/H Lab staff and by site Engineering as needed. Infrastructure and Services supports the F/H Lab for routine maintenance. Chapter 17 of the SRS DSA Support Document describes the support functions for large projects (Ref. 2).

17.3.2.3 Safety Issue Discovery, Communication, Management, and Resolution

Each SRNS employee is responsible for reporting safety-related concerns and occurrences and for initiating, if necessary, a request for corrective action. Each SRNS organization is responsible for the evaluation of, response to, and resolution of corrective action requests issued to the organization. Chapter 14 of this SAR describes the corrective action process.

Environmental, Safety, and Health (ES&H) is responsible for sitewide, safety-related support services at SRS and provides a single, consistent, and continuing point of contact between the line organizations, DOE, and regulatory agencies on all site environmental matters. ES&H is managed by a vice president/general manager. The mission of ES&H is to ensure safe, secure, high quality, and environmentally sound operations. Chapter 17 of the SRS DSA Support Document delineates ES&H responsibilities (Ref. 2).

17.3.2.4 Independent Safety Review, Audit, and Compliance Determination

As noted in Chapter 17 of the SRS DSA Support Document, ES&H is responsible for independent reviews, audits, and compliance determinations (Ref. 2). Section 17.4.1.2 and Chapter 14 of the SRS DSA Support Document provide additional information on independent assessments.

17.3.2.5 Savannah River National Laboratory

The Savannah River National Laboratory develops new technologies associated with the SRS mission, refines existing technologies to meet evolving needs, and provides analytical and experimental technical support to the site, including F/H Lab. Chapter 17 of the SRS DSA Support Document describes Savannah River National Laboratory support activities.

17.3.2.6 Support Services

As noted in Chapter 17 of the SRS DSA Support Document, sitewide safety-related support services are provided by organizations such as the Safeguards, Security, and Emergency Services Division (Ref. 2). Chapter 17 of the SRS DSA Support Document provides further information about the organization and responsibilities.

17.3.3 STAFFING AND QUALIFICATIONS

The F/H Lab program for personnel selection, qualification, and training has been designed such that the facility can perform its mission in a safe and efficient manner. The F/H Lab Technical Safety Requirements document provides the minimum staffing levels needed to maintain safe facility operation (Ref. 10). It does not include staffing required for the analytical mission because this varies based upon sitewide analytical needs. Chapter 17 of the SRS DSA Support Document provides sitewide requirements on staffing and qualifications that are also applicable to the F/H Lab (Ref. 2).

The SRS training program has been developed and implemented to ensure the following:

- Personnel are effectively trained and qualified to safely operate and maintain the facility.
- Changes are adequately understood and accepted by the operating staff.
- Resulting problems or deficiencies are dispositioned properly.

17.3.3.1 Certified Personnel

AL has no requirements for certified training as imposed by DOE Order 5480.20A, since none of the F/H Lab facilities are considered high hazard (Ref. 11).

17.3.3.2 Qualified Personnel

F/H Lab personnel are qualified, as necessary, in accordance with DOE Order 5480.20A (Ref. 11). The qualification is carried out by formal classroom instruction, self study, computer-assisted instruction, and/or on-the-job training through initial training, continuing training, and retraining. Initial qualification of F/H Lab personnel depends on the following:

- Satisfactory completion of written examinations and/or performance requirements (Job Performance Measures and/or Practical Factors)
- Satisfactory physical condition
- Good general health
- Higher supervision's judgment of general qualifications

Continuing training is based on specific job training requirements and generic training requirements such as radiation worker training, general employee training, administrative programs, and safety programs.

Chapter 12 of this SAR, Procedures and Training, provides information and references to the appropriate documents for the procedures and training programs developed at SRS and applied at F/H Lab in compliance with DOE Order 5480.20A (Ref. 11).

17.4 SAFETY MANAGEMENT POLICIES AND PROGRAMS

The key elements in the safety program are the strength and consistency of SRS management support and involvement. It is the policy of SRS management that employee and public safety is more important than production, quality, or costs. The commitment of SRS management to the principles of safety is demonstrated by the following:

- Management's comprehensive understanding of the site's progress and problems in enhancing safety
- Implementation of administrative programs and procedures, in conjunction with area design, to ensure that safety is maintained to the highest extent practical in conformance with applicable DOE Orders
- Management's assignment of high priority for procedural changes to enhance facility safety and for employee notification of these changes
- Management's review and approval of realistic and measurable safety goals to ensure that they reflect a full commitment to safety principles
- Monitoring of monthly progress towards the safety goals by SRS managers and supervisors
- Establishment of a safety training program to educate employees on safety procedures and practices and to emphasize that compliance with safety procedures and practices is a condition of employment

To carry out SRS management's commitment to safety programs and principles, safety design features, as described in Chapter 17 of the SRS DSA Support Document, have been developed and used at SRS (Ref. 2).

The safety program consists of guidelines, management and worker philosophies, practices, instructions, and procedures that are used to provide administrative controls of site personnel activities, work practices, effluent releases from the site waste shipments, and their records. The program provides technical support for radiological studies and for radiological training programs.

17.4.1 SAFETY REVIEW AND PERFORMANCE ASSESSMENT

The F/H Lab safety review and performance assessment programs are consistent with the SRS programs as described in Chapter 17 of the SRS DSA Support Document (Ref. 2). The SRS DSA Support Document includes information on the following programs:

- Oversight review committees
- ES&H independent oversight responsibilities
- Unreviewed Safety Question determinations

- Self-assessments and independent assessments (e.g., Facility Evaluation Board)
- Lessons learned program

For the F/H Lab, the Nuclear Safety Review is governed by the oversight review committees as described in Manual 1-01 (Ref. 3). The F/H Lab Facility Operations Safety Committee is responsible for oversight of facility safety.

17.4.2 CONFIGURATION AND DOCUMENT CONTROL

17.4.2.1 Configuration Management

The configuration management program serves to evaluate and control changes in facility components and systems. Its mission is to establish programs for a technical baseline, change control, and document control and verification.

The F/H Lab has developed a configuration management program, which is implemented through the use of the appropriate design control and configuration control procedures in Manual E7, which conforms on a graded approach basis to the guidelines established in Manual 7E and WSRC-RP-94-644 (Ref. 12, 5, 13).

The graded approach uses the following as a basis for determining the appropriate level of resources to apply when implementing configuration management:

- Functional classification of systems
- Relative importance of safety, safeguards, and security
- Other relevant factors such as funding, size, and complexity

17.4.2.2 Management Requirements and Procedures for Document Control

The management requirements and procedures for SRNS document control activities are listed in Chapter 17 of the SRS DSA Support Document (Ref. 2) and are implemented through the use of appropriate F/H Lab document control procedures (Ref. 8, 9).

17.4.2.3 Quality Assurance

The quality assurance program for configuration management and document control is discussed in Chapter 17 of the SRS DSA Support Document (Ref. 2) and is implemented through F/H Lab design control and configuration management procedures in Manual E7 and document control procedures in Manual L2 (Ref. 8, 12).

17.4.3 OCCURRENCE REPORTING

Chapter 17 of the SRS DSA Support Document provides information on occurrence reporting that is pertinent to the F/H Lab (Ref. 2).

17.4.4 SAFETY CULTURE

Chapter 17 of the SRS DSA Support Document provides information on safety culture (Ref. 2). It summarizes the policies and programs that are used for the following reasons:

- To promote the interest and involvement of all associated workers in facility safety
- To facilitate a questioning attitude toward safety-related activities and equipment
- To ensure that workers understand the potential risks to the facility and fellow workers, as well as the rewards and sanctions associated with personal safety performance

Chapter 17 of the SRS DSA Support Document describes the SRNS management policies that contribute to the safety culture.

17.5 REFERENCES

1. Nuclear Safety Management. Title 10 Energy, Code of Federal Regulations, Part 830, U.S. Department of Energy, Washington, DC, January 2006.

2. Savannah River Site DSA Support Document – Site Characteristics and Program Descriptions. Rev. 0, WSRC-IM-2004-00008, Westinghouse Savannah River Company, Aiken, SC, October 2004.

3. Policy Manual. 1-01, Savannah River Nuclear Solutions, Aiken, SC.

4. Management Requirements and Procedures. Manual 1B, Savannah River Nuclear Solutions, Aiken, SC.

5. Configuration Management Manual. Manual 7E, Savannah River Nuclear Solutions, Aiken, SC.

6. Training and Qualification Program Manual. Manual 4B, Savannah River Nuclear Solutions, Aiken, SC.

7. Deleted

8. Analytical Laboratories Standard Practices. Manual L2, Savannah River Nuclear Solutions, Aiken, SC.

9. Analytical Laboratories CLAB Multi-Group Procedures. Manual L2-1, Savannah River Nuclear Solutions, Aiken, SC.

10. Technical Safety Requirements, Savannah River Site, F-Area Central Laboratory Facility, Buildings 772-F, 772-1F, and 772-4F. WSRC-TS-95-18, Rev. 0, Westinghouse Savannah River Company, Aiken, SC, September 1997.

11. Personnel Selection, Qualification, Training, and Staffing Requirements at DOE Reactor and Non-Reactor Nuclear Facilities. DOE Order 5480.20A, Change 1, U.S. Department of Energy, Washington, DC, November 1994.

12. Conduct of Engineering and Technical Support. Manual E7, Savannah River Nuclear Solutions, Aiken, SC.

13. F/H Laboratory Configuration Management Implementation Plan. WSRC-RP-94-644, Savannah River Nuclear Solutions, Aiken, SC, June 1994.

14. Analytical Laboratories Department Organization Chart. Savannah River Nuclear Solutions, Aiken, SC.