SAFETY ANALYSIS REPORT
SAVANNAH RIVER SITE
H-CANYON & OUTSIDE FACILITIES, H-AREA

H-CANYON

SAFETY ANALYSIS REPORT (U)

REVISION 12

June 2007

UNCLASSIFIED
DOES NOT CONTAIN
UNCLASSIFIED CONTROLLED
NUCLEAR INFORMATION

DC &
Reviewing
Official: [illegible]

Date: 6-1-07
IG-SR-3 2104

SAVANNAH RIVER SITE
Aiken, SC 29808 • www.srs.gov

PREPARED FOR THE U.S. DEPARTMENT OF ENERGY UNDER CONTRACT NO. DE-AC09-96SR18500

SAFETY ANALYSIS REPORT
SAVANNAH RIVER SITE
H–CANYON & OUTSIDE FACILITIES, H–AREA

H–CANYON

SAFETY ANALYSIS REPORT (U)

REVISION 12

June 2007

SAVANNAH RIVER SITE
Aiken, SC 29808 • www.srs.gov

PREPARED FOR THE U.S. DEPARTMENT OF ENERGY UNDER CONTRACT NO. DE-AC09-96SR18500

DISCLAIMER

This document was prepared by Washington Safety Management Solutions LLC (WSMS) under contract with Washington Savannah River Company (WSRC), subject to the warranty and other obligations of that contract and in furtherance of WSRC's contract with the United States Department of Energy (DOE).

Release to and Use by Third Parties. As it pertains to releases of this document to third parties, and the use of or reference to this document by such third parties in whole or in part, neither WSMS, WSRC, DOE, nor their respective officers, directors, employees, agents, consultants or personal services contractors (i) make any warranty, expressed or implied, (ii) assume any legal liability or responsibility for the accuracy, completeness, or usefulness, of any information, apparatus, product or process disclosed herein or (iii) represent that use of the same will not infringe privately owned rights. Reference herein to any specific commercial product, process, or service by trademark, name, manufacture or otherwise, does not necessarily constitute or imply endorsement, recommendation, or favoring of the same by WSMS, WSRC, DOE or their respective officers, directors, employees, agents, consultants or personal services contractors. The views and opinions of the authors expressed herein do not necessarily state or reflect those of the United States Government or any agency thereof.

CONTENTS

Page

LIST OF TABLES xv

LIST OF FIGURES AND DRAWINGS xvii

LIST OF ACRONYMS AND ABBREVIATIONS xvii

LIST OF REVISIONS xxii

SUMMARY OF REVISIONS xxiii

EXECUTIVE SUMMARY ES-1

1.0 INTRODUCTION 1-1

1.1 SCOPE 1-1

1.2 FACILITY BACKGROUND 1-1

1.3 STATUS OF DOCUMENTED SAFETY ANALYSIS 1-2

1.4 REFERENCES 1-2

2.0 FACILITY AND PROCESS DESCRIPTION 2-1

2.1 BACKGROUND AND APPLICATION TO THE UNREVIEWED SAFETY QUESTION PROCESS 2-1

2.2 H–CANYON OVERVIEW 2-1

2.3 FUEL RECEIPT AND STORAGE 2-2

2.4 FUEL DISSOLVING 2-3

2.5 FEED PREPARATION OR “HEAD END” 2-3

2.6 SOLVENT EXTRACTION 2-4

2.6.1 Solvent Extraction – First Cycle 2-4

2.6.2 Solvent Extraction – Second Uranium Cycle 2-5

CONTENTS (Continued)

Page

2.6.3 Solvent Extraction – Second Product Cycle 2-6

2.7 SOLVENT RECOVERY 2-6

2.8 WASTE CONCENTRATION 2-7

2.9 RERUN 2-8

2.10 FRAME WASTE RECOVERY 2-8

2.11 NEPTUNIUM/PLUTONIUM STORAGE 2-9

2.11.1 Neptunium Processing 2-9

2.12 REPACKAGING OF WASTE STORED IN LARGE STEEL BOXES 2-10

2.13 SAFETY SYSTEMS 2-10

2.14 OUTSIDE FACILITIES H–AREA (OF–H) 2-10

2.14.1 A–Line 2-10

2.14.2 Enriched Uranium Storage Tank 2-11

2.14.3 Bulk Chemical Storage 2-11

2.14.4 Cold Feed Preparation Facility 2-11

2.14.5 Water Handling Facility 2-12

2.14.6 Acid Recovery Unit 2-12

2.14.7 General Purpose Evaporator 2-12

2.14.8 Segregated Solvent Facilities 2-12

2.15 SEPARATE FACILITIES HOUSED WITHIN H–CANYON 2-13

2.15.1 Old HB–Line Facility 2-13

2.15.2 Uranium Solidification Facility 2-13

CONTENTS (Continued)

Page

2.15.3 Tanks JT–71 and JT–72 2-14

2.16 H–CANYON VENTILATION SYSTEMS 2-14

2.16.1 Central Air System 2-14

2.16.2 Canyon Air System 2-14

2.16.3 Process Vessel Vent System 2-15

2.16.4 Recycle Vessel Vent System 2-15

2.16.5 Dissolver Off–Gas System 2-16

2.16.6 Old HB–Line Ventilation System 2-16

2.17 FIRE PROTECTION SYSTEM 2-17

2.18 NEARBY FACILITIES 2-18

2.18.1 Building 299–H 2-18

2.18.2 Building 253–H 2-19

2.19 REFERENCES 2-19

3.0 RELEVANT OPERATIONAL HISTORY 3-1

3.1 SIGNIFICANT EVENTS 3-1

3.2 SIGNIFICANT EQUIPMENT AND OPERATIONS CHANGES/UPGRADES 3-7

4.0 SAFETY DOCUMENTATION 4-1

4.1 DOCUMENTED SAFETY ANALYSIS DOCUMENTS 4-1

4.1.1 Safety Analysis Report Addenda 4-1

4.1.2 Technical Safety Requirements 4-5

CONTENTS (Continued)

Page

4.1.3 Double Contingency Analysis 4-5

4.1.4 Justification for Continued Operation 4-6

4.2 OTHER DOCUMENTS 4-6

4.2.1 Fire Hazards Analysis 4-6

4.2.2 Linking Document Database 4-6

4.3 REFERENCES 4-8

5.0 COMPLIANCE STATUS 5-1

5.1 STATUS 5-1

5.2 GRADED APPROACH COMPLIANCE 5-1

5.3 REFERENCES 5-22

6.0 SAFETY MANAGEMENT 6-1

6.1 INTRODUCTION 6-1

6.2 WORKER PROTECTION 6-2

6.3 MANAGEMENT POLICIES 6-3

6.3.1 Integrated Safety Management System 6-4

6.4 ORGANIZATIONAL STRUCTURE AND MANAGEMENT RESPONSIBILITIES 6-4

6.5 SYSTEM OF CONTROL DOCUMENTS 6-6

6.5.1 Contractual Agreement 6-6

6.5.2 Standards Requirements Identification Document 6-6

6.5.3 Authorization Agreement 6-7

CONTENTS (Continued)

Page

6.5.4 Unreviewed Safety Question Process 6-7

6.5.5 Authorization of Startup by Department of Energy 6-8

6.5.6 Procedures 6-8

6.5.7 Emergency Plan 6-9

6.5.8 Facility Fire Protection Program 6-9

6.5.9 Nuclear Criticality Safety Program 6-9

6.5.9.1 Overview of the Nuclear Criticality Safety Program 6-10

6.5.9.2 Selection of Criticality Prevention Safety Significant Items 6-11

6.5.9.3 Facility Modifications and Nuclear Incident Monitor Bell Audibility 6-13

6.5.10 Nuclear Criticality Safety Evaluations and Double Contingency Analyses 6-16

6.5.11 Nuclear Material Control and Accountability 6-18

6.5.12 Configuration Control 6-18

6.5.13 Installed Process Instrumentation 6-19

6.5.14 Environmental Compliance Program 6-20

6.5.15 Industrial Hygiene Program 6-20

6.5.16 Structural Integrity Program 6-20

6.6 EVENTS, CONDITIONS, CONCERN INVESTIGATIONS, AND OCCURRENCE REPORTING 6-21

6.7 REVIEW AND AUDIT 6-21

6.8 TRAINING 6-21

CONTENTS (Continued)

Page

6.9 FACILITY OPERATING RECORDS 6-22

6.10 RADIATION PROTECTION PROGRAM 6-23

6.11 FACILITY RADIOACTIVE AND HAZARDOUS MATERIALS SHIPPING AND RECEIVING PROGRAM 6-23

6.12 QUALITY ASSURANCE 6-25

6.13 EQUIPMENT MAINTENANCE 6-25

6.14 WORK CONTROL 6-26

6.15 CONDUCT OF OPERATIONS 6-27

6.16 PERFORMANCE INDICATORS 6-27

6.17 TESTING AND MAINTENANCE 6-27

6.18 RADIOACTIVE AND HAZARDOUS WASTE MANAGEMENT 6-28

6.19 REFERENCES 6-29

7.0 OPERATING ENVELOPE 7-1

8.0 SAFETY EVALUATION 8-1

8.1 FACILITY CATEGORIZATION AND HAZARD IDENTIFICATION 8-1

8.2 HAZARD ANALYSIS AND ACCIDENT CATEGORIZATION 8-15

8.2.1 Hazard Analysis 8-15

8.2.1.1 Preliminary Hazards Analysis Method 8-15

8.2.1.2 Safety Analysis Report Method 8-17

8.2.2 Accident Categorization 8-23

CONTENTS (Continued)

Page

8.3 ACCIDENT ANALYSIS 8-24

8.3.1 Dominant Accidents 8-24

8.3.2 Dominant Accident Scenario Descriptions 8-25

8.3.2.1 Loss of Containment 8-25

8.3.2.2 Explosion 8-35

8.3.2.3 Fire 8-71

8.3.2.4 Inadvertent Nuclear Criticality 8-90

8.3.2.5 Loss of Containment 8-102

8.3.2.6 Inadvertent Personnel Exposure to Ionizing Radiation 8-110

8.3.2.7 External Impact Events 8-122

8.3.2.8 Natural Phenomena 8-126

8.3.3 Continued Operation with the Abandoned Old HB–Line Exhaust Duct 8-137

8.3.3.1 Background and Description of the Old HB–8-Line Exhaust Duct 8-137

8.3.3.2 Controls for the Old HB–Line Exhaust Duct 8-138

8.3.3.3 Accident Analysis for the Abandoned Old HB–Line Exhaust Duct 8-138

8.3.3.4 Conclusion for the Abandoned Old HB-Line Exhaust 8-140

8.3.4 Waste Repackaging 8-140

8.3.4.1 Release Pathways and Scenarios 8-140

8.3.4.2 Preventive and Mitigative Features 8-142

CONTENTS (Continued)

Page

8.4 SAFETY CLASS AND SAFETY SIGNIFICANT DESCRIPTION APPROACH 8-190

8.4.1. Background 8-190

8.4.2. Integration of Functional Classification and Facility Safety Bases 8-190

8.4.3. Designation of Safety Class and Safety Significant Systems for H–Canyon and Outside Facilities H–Area 8-190

8.4.4. Surveillance Requirements 8-191

8.4.5 Specific Administrative Control Basis 8-191

8.4.5.1 Large Steel Box Verifications (TSR 5.7.2.12.f) 8-191

8.4.5.2 Standard Large Box Verification (TSR 5.7.2.12.g) 8-192

8.4.5.3 Large Steel Box Verifications (TSR 5.7.2.12.h) 8-193

8.4.5.4 Nuclear Criticality Safety Program - Inadvertent Criticality Mitigation (TSR 5.7.2.3.c) 8-194

8.4.5.5 Nuclear Criticality Safety Program - Inadvertent Criticality Mitigation (TSR 5.7.2.3.d) 8-195

8.4.5.6 Nuclear Criticality Safety Program - Inadvertent Criticality Mitigation (TSR 5.7.2.3.e) 8-197

8.4.5.7 Nuclear Criticality Safety Program - Inadvertent Criticality Prevention (TSR 5.7.2.3.g) 8-198

8.4.5.8 Nuclear Criticality Safety Program - Inadvertent Criticality Prevention (TSR 5.7.2.3.h) 8-199

8.4.5.9 Nuclear Criticality Safety Program - Inadvertent Criticality Prevention (TSR 5.7.2.3.i) 8-201

CONTENTS (Continued)

Page

8.4.5.10 Nuclear Criticality Safety Program - Inadvertent Criticality Mitigation (TSR 5.7.2.3.j) 8-202

8.4.5.11 Nuclear Criticality Safety Program - Inadvertent Criticality Mitigation (TSR 5.7.2.3.k) 8-203

8.4.5.12 Nuclear Criticality Safety Program - Inadvertent Criticality Mitigation (TSR 5.7.2.3.l) 8-205

8.4.5.13 Nuclear Criticality Safety Program - Inadvertent Criticality Mitigation (TSR 5.7.2.3.m) 8-206

8.4.5.14 Chemical Inventory Program (TSR 5.7.2.9.d)..... 8-208

8.4.5.15 Process Controls that Address Inadvertent Transfers and Releases, and Loss of Containment - Inadvertent Transfer (TSR 5.7.2.10.a)..... 8-209

8.4.5.16 Process Controls that Address Inadvertent Transfers and Releases, and Loss of Containment - Inadvertent Transfer (TSR 5.7.2.10.b) 8-210

8.4.5.17 Process Controls that Address Inadvertent Transfers and Releases, and Loss of Containment - Loss of Containment Uncontrolled Reaction on H–Canyon Third Level or in Outside Facilities H–Area (TSR 5.7.2.10.e) 8-211

8.4.5.18 Process Controls that Address Inadvertent Transfers and Releases, and Loss of Containment - Loss of Containment Uncontrolled Reaction in Outside Facilities H–Area and the Release of the Entire Contents of One or More Tanks in Bulk Chemical Storage or the Acid Recovery Unit in Outside Facilities H–Area (TSR 5.7.2.10.f) 8-212

8.4.5.19 Process Controls that Address Inadvertent Transfers and Releases, and Loss of Containment - Coil and Tube Failure Release to the Segregated Cooling Water System and Inadvertent Transfer to the Segregated Cooling Water System (TSR 5.7.2.10.g)..... 8-214

CONTENTS (Continued)

Page

8.4.5.20 Process Controls that Address Inadvertent Transfers and Releases, and Loss of Containment - Loss of Containment Uncontrolled Reaction on H–Canyon Third Level or in Outside Facilities H–Area (TSR 5.7.2.10.h) 8-215

8.4.5.21 Process Controls that Address Inadvertent Transfers and Releases, and Loss of Containment - Loss of Containment Ruthenium Volatilization (TSR 5.7.2.10.i) 8-216

8.4.5.22 Deleted 8-217

8.4.5.23 Deleted 8-218

8.4.5.24 Process Controls Required to Prevent Organic Vapor and Red Oil Explosions - Explosion – TBP–Nitric Acid Runaway Reaction (TSR 5.7.2.11.a) 8-218

8.4.5.25 Process Controls Required to Prevent Organic Vapor and Red Oil Explosions - Explosion – TBP–Nitric Acid Runaway Reaction (TSR 5.7.2.11.b) 8-219

8.4.5.26 Process Controls Required to Prevent Organic Vapor and Red Oil Explosions - Segregated Solvent Gamma Activity Limit (TSR 5.7.2.11.d) 8-220

8.4.5.27 Process Controls Required to Prevent Organic Vapor and Red Oil Explosions - Explosion – TBP–Nitric Acid Runaway Reaction (TSR 5.7.2.11.g) 8-221

8.4.5.28 Process Controls Required to Prevent Organic Vapor and Red Oil Explosions - Explosion – TBP–Nitric Acid Runaway Reaction (TSR 5.7.2.11.j) 8-222

CONTENTS (Continued)

Page

8.4.5.29 Process Controls Required to Prevent Organic Vapor and Red Oil Explosions - Explosion – TBP–Nitric Acid Runaway Reaction (TSR 5.7.2.11.k) 8-224

8.4.5.30 Flammable Gas/Vapor Dilution Process Controls - Hydrogen Deflagration in the Dissolver (TSR 5.7.2.12.a) 8-225

8.4.5.31 Flammable Gas/Vapor Dilution Process Controls - Hydrogen Deflagration in the Canyon Process Tanks (TSR 5.7.2.12.b) 8-226

8.4.5.32 Hydrogen Dilution Process Controls - Hydrogen Deflagration in the Containers Stored in Outside Facilities H–Area (TSR 5.7.2.12.c) 8-228

8.4.5.33 Hydrogen Dilution Process Controls - Hydrogen Deflagration in the Dissolver (TSR 5.7.2.12.d) 8-229

8.4.5.34 Hydrogen Dilution Process Controls - Hydrogen Deflagration in the Dissolver (TSR 5.7.2.12.e) 8-230

8.4.5.35 Process Controls Required to Prevent an Ammonium Nitrate Build - Explosion (TSR 5.7.2.13.a) 8-231

8.4.5.36 Process Controls Required to Prevent an Ammonium Nitrate Buildup - Explosion (TSR 5.7.2.13.b) 8-232

8.4.5.37 Process Controls Required to Limit Personnel Exposure - Inadvertent Personnel Radiation Exposure (TSR 5.7.2.14.a) 8-233

8.4.5.38 Process Controls Required to Limit Personnel Exposure - Sample Aisle Internal Exposure (TSR 5.7.2.14.b) 8-235

8.4.5.39 Process Controls Required to Limit Personnel Exposure - Sample Aisle Internal Exposure (TSR 5.7.2.14.c) 8-236

CONTENTS (Continued)

Page

8.4.5.40 Process Controls Required to Limit Personnel Exposure - Sample Aisle Internal Exposure (TSR 5.7.2.14.d) 8-237

8.4.5.41 Process Controls Required to Limit Personnel Exposure - Inadvertent Personnel Radiation Exposure in the Hot Canyon from Fuel Handling Operations in the Railroad Tunnel (TSR 5.7.2.14.e) 8-238

8.4.5.42 Process Controls Required to Limit Personnel Exposure - Inadvertent Personnel Radiation Exposure in the Hot Canyon from Fuel Handling Operations in the Railroad Tunnel (TSR 5.7.2.14.f) 8-239

8.4.5.43 Process Controls Required to Limit Personnel Exposure - Inadvertent Personnel Radiation Exposure in the Hot Canyon from Fuel Handling Operations in the Railroad Tunnel (TSR 5.7.2.14.g) 8-240

8.4.5.44 Process Controls Required to Limit Personnel Exposure - Inadvertent Personnel Radiation Exposure in the Hot Canyon from Fuel Handling Operations in the Railroad Tunnel (TSR 5.7.2.14.h) 8-242

8.4.5.45 Process Controls Required to Limit Personnel Exposure - Inadvertent Personnel Radiation Exposure (TSR 5.7.2.14.i) 8-243

8.4.5.46 Process Controls Required to Limit Personnel Exposure - Inadvertent Personnel Radiation Exposure (TSR 5.7.2.14.j) 8-245

8.4.5.47 Process Controls Required to Protect Source Term Assumption (TSR 5.7.2.15.c) 8-246

8.4.5.48 Process Controls Required to Prevent an Organic or Solvent Fire (TSR 5.7.2.16.a) 8-247

CONTENTS (Continued)

Page

8.4.5.49 Process Controls Required to Prevent an Organic or Solvent Fire (TSR 5.7.2.16.b) 8-248

8.4.5.50 Ammonia Concentration Verification (TSR 5.7.2.12.i) 8-249

8.4.5.51 Treatment of Organics Prior to Neutralization (TSR 5.7.2.12.j) 8-250

8.4.5.52 Flammable Gas/Vapor Dilution Process Controls - Hydrogen Deflagration in the Dissolver During Super Kukla Metal Processing (TSR 5.7.2.12.k) 8-252

8.4.5.52 Flammable Gas/Vapor Dilution Process Controls - Hydrogen Deflagration in the Dissolver During Pu/Be Processing (TSR 5.7.2.12.l) 8-252

8.5 NON–SC/SS DEFENSE–IN–DEPTH CONTROLS 8-266

8.5.1 H–Canyon Defense-in-Depth Controls 8-266

8.5.2 HB–Line DiD Controls 8-267

8.6 SUPPORT FOR OTHER FACILITY AUTHORIZATION BASES 8-269

8.7 REFERENCES 8-270

9.0 CONCLUSION 9-1

10.0 DRAWINGS 10-1

ADDENDUM 1 ..... A.1–1

ADDENDUM 2 ..... A.2–1

ADDENDUM 3 ..... A.3–1

ADDENDUM 4 ..... A.4-1

ADDENDUM 5 ..... A.5-1

LIST OF TABLES

Page

ES–1 Summary of the Commitments Made in this Safety Analysis Report ES-4

ES–2 H–Canyon Risk Analysis Summary ES-5

ES–3 Outside Facilities H–Area Risk Summary ES-6

4.1 Applicable Documented Safety Analysis Documents 4-9

5–1 Compliance "Roadmap" Table 5-4

6.1 H–Canyon and Outside Facilities H–Area Minimum Shift Crew Composition 6-32

6.2 Procedural Activities 6-33

8.1–1 Maximum Radionuclide Concentrations in H–Canyon Processes 8-4

8.1–2 Maximum Radionuclide Concentration for Fire Accident Analysis for H–Canyon Solvent and Resin Column Loading, from Safety Analysis Report Addendum 1 8-5

8.1–3 H–Canyon Vessel Capacities 8-6

8.1–4 Typical Quantities of Chemicals Stored For Use in H–Canyon, Outside Facilities H–Area, and HA–Line Processing 8-11

8.1–5 H–Canyon Third Level Cold Feed Tank Overflow Capacities and Chemicals Normally Used in the Tanks 8-12

8.1–6 Capacities of Tanks Used to Store Bulk Liquid Chemicals 8-14

8.3–1 Summary Table of Results of Preliminary Hazards Analysis Risk Matrix Binning for H–Canyon Operations 8-144

8.3–2 Summary Table of Controls for H–Canyon and Outside Facilities H–Area Dominant Accidents 8-151

8.4–1 Safety–Class Structures, Systems, and Components for H–Canyon/Outside Facilities H–Area/HA–Line 8-253

8.4–2 Safety–Significant Structures, Systems, and Components for H–Canyon/Outside Facilities H–Area/ HA–Line 8-254

TABLES (Continued)

Page

8.4–3 Design Features for H–Canyon/Outside Facilities H–Area/HA–Line..... 8-256

8.4–4 Administrative Controls for H–Canyon/Outside Facilities H–Area/HA–Line 8-259

8.5–1 H–Canyon Non–SC/SS DiD Data 8-265

LIST OF FIGURES AND DRAWINGS

Page

8.3–1 Solvent Fire Initiating Scenarios for the First Solvent Extraction Cycle..... 8-81

10–1 (Deleted) 10-2

10–2 Typical Cross Section View of H–Canyon 10-3

10–3 Canyon Ventilation System Diagram 10-4

10–4 Process Vessel Vent System Diagram 10-5

10–5 Recycle Vessel Vent System in 292–H Showing Stack Monitor Flow 10-6

10–6 Recycle Vessel Vent System Diagram 10-7

10–7 Dissolver Offgas System Diagram..... 10-8

10–8 Cooling Water Systems..... 10-9

10–9 Segregated Cooling Water System 10-10

10–10 S–4404 Line Diagram (at project completion) 10-11

10–11 H-Canyon T1 and T2 Building Electrical System Single Line Diagram..... 10-12

10–12 Layout of OF–H and the Location of the Hanford Container Storage Area.... 10-13

10–13 H–Area, A–Line Building 211–H Diagram..... 10-14

10–14 Highly Enriched Uranium Blend Down Process Functional Arrangement 10-15

LIST OF ACRONYMS AND ABBREVIATIONS

AA	Authorization Agreement
AC	Administrative Control
AF	Airborne Fraction
AHA	Assisted Hazards Analysis
ALARA	As Low As Reasonably Achievable
AN	Ammonium Nitrate
ANS	American Nuclear Society
ANSI	American Nuclear Standards Institute
ARF	Airborne Release Fraction
ARU	Acid Recovery Unit
BEU	Beyond Extremely Unlikely
BIO	Basis for Interim Operation
C	Celsius
CBU	Closure Business Unit
CCW	Circulated Cooling Water
CFR	Code of Federal Regulations
CHA	Consolidated Hazards Analysis
CHAP	Consolidated Hazards Analysis Process
Ci	Curie
Ci/lb	Curies per pound of solution
CLFL	Composite Lower Flammability Limit
CSL	Criticality Safety Limit
CW	Co-located Worker
DBA	Design Basis Accident
DBE	Design Basis Earthquake
DBT	Design Basis Tornado
DCA	Double Contingency Analysis
DCS	Distributed Control System
DF	Design Feature
DG	Diesel Generator
DiD	Defense–in–Depth
DOE	Department of Energy
DOE–SR	Department of Energy–Savannah River Operations
DOT	Department of Transportation
DSA	Documented Safety Analysis

LIST OF ACRONYMS AND ABBREVIATIONS (Continued)

DU	Depleted Uranium
EC	Engineering Calculation
EG	Evaluation Guideline
EU	Extremely Unlikely
ERPG	Emergency Response Planning Guidelines
ESH	Environmental, Safety, and Health
EUS	Enriched Uranium Storage
FCR	Functional Classification Report
F/H LAB	F/H Laboratories
FHA	Fire Hazards Analysis
FLS	First–Line Supervisor
FW	Facility Worker
FWR	Frame Waste Recovery
g	Gram
g/l	Gram per liter
GP	General Purpose
gpm	Gallons per minute
GS	General Service
GVC	Gang Valve Corridor
HAN	Hydroxylamine Nitrate
HAW	High Activity Waste
HAWTT	High Activity Waste Transport Trailer
HCMA	Hot Crane Maintenance Area
HCP	H–Area Completion Project
HE	Hazard Evaluation
HEPA	High–Efficiency Particulate Air
HEU	Highly Enriched Uranium
HFIR	High Flux Isotope Reactor
HGVC	Hot Gang Valve Corridor
HLW	High Level Waste
HM	H–Modified
ICRP	International Commission on Radiological Protection
ICW	Independent Cooling Water
IH	Industrial Hygiene
in^2	Square inch
IPI	Installed Process Instrumentation

LIST OF ACRONYMS AND ABBREVIATIONS (Continued)

ISM	Integrated Safety Management
ISMS	Integrated Safety Management System
JCO	Justification for Continued Operation
kg	Kilogram
LAW	Low Activity Waste
lb	Pound
LCO	Limiting Condition for Operation
LDD	Linking Document Database
LEL	Lower Explosive Limit
LEU	Low Enriched Uranium
LFL	Lower Flammability Limit
LSB	Large Steel Box
M	Moles per liter, Molar, Molarity, or Molar Solution
MACCS	MELCOR Accident Consequence Code System
MAR	Material-At-Risk
Mk	Mark (e.g., Mark–16B or Mk–22)
MOI	Maximally-exposed Offsite Individual
mrem	Millirem (1/1000th of a rem)
N/A	Not Applicable
NCSE	Nuclear Criticality Safety Evaluation
NCSP	Nuclear Criticality Safety Program
NFPA	National Fire Protection Association
NIM	Nuclear Incident Monitor
NNSA	National Nuclear Security Administration
Np	Neptunium
NPH	Natural Phenomena Hazard
NSB	Nuclear Safety Blank
OEP	Occupationally Exposed Person
OF–H	Outside Facilities H–Area
OHBL	Old HB–Line
ORR	Operational Readiness Review
OSA	Onsite Safety Assessment
OSR	Operational Safety Requirements
PEC	Plutonium Equivalent Curies
PHA	Preliminary Hazards Analysis
PHR	Process Hazards Review

LIST OF ACRONYMS AND ABBREVIATIONS (Continued)

PISA	Potential Inadequacy in the Safety Analysis
PLC	Programmable Logic Controller
ppb	Parts per billion
PPE	Personal Protective Equipment
PS	Production Support
psi	Pounds per square inch
psig	Pounds per square inch, gage
PSM	Process Safety Management
Pu	Plutonium
PVV	Process Vessel Vent
QA	Quality Assurance
QAP	Quality Assurance Plan
RA	Readiness Assessments
Rad Con	Radiological Control
RCO	Radiological Control Operations
rem	Roentgen Equivalent Man
rem/hr	Roentgen equivalent man per hour (~1 R/hr)
RF	Respirable Fraction
ROV	Red Oil Vent (nozzle)
RTD	Resistance Temperature Device
RVV	Recycle Vessel Vent
RWMB	Radioactive Waste Management Basis
RWP	Radiological Work Permit
SAC	Specific Administrative Control
SAR	Safety Analysis Report
SB	Safety Basis
SC	Safety Class
scfh	Standard cubic feet per hour
scfm	Standard cubic feet per minute
SCW	Segregated Cooling Water
SER	Safety Evaluation Report
SIRIM	Site Item Reportability and Issue Management
SIH	Standard Industrial Hazard
SLB	Standard Large Box
SOM	Shift Operations Manager
Sp Gr (sp gr)	Specific Gravity of a solution

ACRONYMS AND ABBREVIATIONS (Continued)

SR	Surveillance Requirement
S/RID	Standards/Requirement Identification Document
SRS	Savannah River Site
SRNL	Savannah River National Laboratory
SS	Safety Significant
SSC	Structure, System, and Component
STD	Standard
STE	Shift Technical Engineer
TA	Test Authorization
TBP	Tributyl phosphate
TEDE	Total Effective Dose Equivalent
TNT	Tri–nitro Toluene
TS	Technical Standard
TSR	Technical Safety Requirement
TVA	Tennessee Valley Authority
U	Uranium
UN	Uranyl Nitrate
USF	Uranium Solidification Facility
USQ	Unreviewed Safety Question
USQE	Unreviewed Safety Question Evaluation
VOC	Volatile Organic Compound
WAC	Waste Acceptance Criteria
WGVC	Warm Gang Valve Corridor
WSRC	Washington Savannah River Company
yr	Year

LIST OF REVISIONS

Revision Number	Date
Revision 0	April 2002
Revision 1	July 2002
Revision 2	September 2002
Revision 3	October 2002
Revision 4	May 2003
Revision 5	February 2004
Revision 6	February 2005
Revision 7	March 2006
Revision 8	July 2006
Revision 9	December 2006
Revision 10	January 2007
Revision 11	March 2007
Revision 12	June 2007

SUMMARY OF REVISIONS (U)

The following is a summary of the significant information contained in the contents of recent revisions to this document. It is provided for information and training purposes only.

Revision 9 December 2006

Editorial Changes	Revised Cover Page, Table of Contents, and List of Revisions, HC building number, GSAR replaced with Support Document, corrected typographical errors, made organizational changes, and added references as required.
Section 1.2	Updated "Facility Background."
Chapter 2	Updated the status of facility activities.
Section 3.2	Updated the status of facility activities.
Table 4.1	Revised to delete JCOs WSRC-RP-2002-00632 and WSRC-RP-2005-01627.
Section 4.1.2	Revised to describe the relationship between TSR and CSL limits and process limits.
Section 6.5.9.2	Revised to better reflect the current revision of E7 2.23.
Section 6.5.10	Revised to include DCA, N-NCS-H-00037, rev. 15.
Section 7.0	Updated the current status of the operating envelope.
Section 8.3.2.1.1.3	Revised the description of the SCW Return to include the non-credited flow interlocks to the Delaying Basin. Added a description of the under wall leak in the SCW Basin.
Section 8.3.2.3.2	Added statement that FWR is not included in the earthquake analysis.
Section 8.3.2.3.3 and Addendum 1 Section A.1.5.2	Revised to discuss sealed source inventory and impact to fire event release.
Sections 8.3.2.2.5.2 and 8.5	Removed discussion of DiD for detecting organic.
Section 8.3.2.4	Added discussion of PHA Event (FO-12a) postulating a tanker truck carrying flammable liquid crashing into the A-Line tanks. Also added text crediting gadolinium as a neutron absorber and its reference (NCSE).

Revision 9 (continued) December 2006

Section 8.3.2.8.1.1 Indicated exception for FWR and 2nd product cycle in earthquake analysis.

Revised to indicate that that the stack would withstand a PC-3 earthquake but the liner would collapse.

Added references for stack structural EC.

Added discussion of additional seismic accident analysis leak paths per PI-06-004.

Revised Penetration Factor (Leak Path Factor [LPF]) from 0.1 to 1.0.

Added discussion of PI-06-004.

Deleted discussion of 0.1 penetration factor.

Added discussion of EC S-CLC-H-01085.

Section 8.3.2.8.2 Added discussion of stack failure during a tornado and affect on 292-H.

Section 8.3.2.8.2.1 Added paragraph to clarify that there would not be accident within the canyon caused by a tornado.

Added discussion of EC T-CLC-H-00312 addressing stack failure at the 68 foot level from a tornado.

Section 8.3.2.4, Table 8.3-2, and Table 8.4-4

Removed Tank 8.6 from criticality during neutralization.

Section 8.3.2.7 Added "Aircraft Impact Frequency for H-Canyon Structures."

Section 8.3.3, Tables 8.3-2 and 8.4-4

Revised to address completion of project CL03002, including deletion of the control requiring posting of sign around the abandoned OHBL duct, and PI-06-04.

Section 8.4.2 Added section for Integration of Functional Classification and Facility Authorization Bases.

Tables 8.4-1 and 8.4-3

Added 292-2H with 292-H when referring to housing the Canyon Exhaust Fans.

Table 8.4-3, Changed the functional class of decanters from SC to SS.

Section 8.4.5, Tables 8.4-1, 8.4-3

Added section for Specific Administrative Controls and revised tables accordingly.

Revision 9 (continued) December 2006

Section 8.5 Revised to indicate that this section contains historical information.

Section 8.6 Added references USQ-HCA-2006-00701, T-CLC-H-00312, Rev. 3, T-CLC-H-00798, Rev. 1, T-CLC-H-00799, M&O-MDO-2006-00217, USQ-HCA-2006-00119, S-CLC-H-00700, S-CLC-H-01085.

Addendum 1 Incorporated Section 8 revisions.

Revised consequences and risk for the DBE in Tables A.1.1-1, A.1.1-2, A.1.6-1A and A.1.6-1B.

Added disclaimer to Table A.1.2-1 that second product cycle and FWR are not included in the earthquake accident analysis.

Revision 10 January 2007

Editorial Changes Revised Cover Page, Table of Contents, and List of Revisions, corrected typographical errors, and added references as required. Addressed ammonia and organic vapor contribution to LFL.

Section 3.1 Added discussion on NI/PISA associated with ammonia generation and flammability during neutralization.

Table 4.1 Updated to latest dates for the SAR and TSR.

Section 8.3.2.2.3, Table 8.3-1, Section 8.4.5.30, Section 8.4.5.31

Updated Title to Flammable Gas/Vapor and additional information to include analysis and controls for ammonia and organics associated with the postulated deflagration events for all applicable vessels.

Revised engineered controls for evaporators and dissolvers. This included revising air purge rates and adding additional evaporators that require these controls.

Table 8.3-2, Section 8.4.5.50, Section 8.4.5.51

Added new SACs for ammonia concentration verification and treatment of organics through the evaporator prior to neutralization.

Revision 11 March 2007

Editorial Changes	Revised Cover Page, Table of Contents, and List of Revisions, HC building number, GSAR replaced with Support Document, corrected typographical errors, corrected reference list in Addendum 3.
Section 3.2	Added description of Super Kukla Metal processing.
Table 4.1	Added SAR Rev. 11 and TSR Rev. 15.
Section 8.3.2.2.1.2	Revised RTD TSR SR wording to be consistent with the TSR.
Section 8.4.5.51.2	Base information added to include why cake removal streams do not require evaporation before neutralization
Section 8.4.5.52	Added new SAC (TSR 5.7.2.12.k) to require a minimum nitric acid concentration to be maintained in the dissolvers when Super Kukla Metal materials are present.
Addendum 4	Incorporated Addendum 4 to support processing of Super Kukla Metals.

Revision 12 June 2007

Editorial Changes Revised Cover Page, Table of Contents, and List of Revisions.

Section 2.14.1 Deleted "seven" to remove ambiguity about any additional tanks.

Section 3.2 Added description of Pu/Be material processing.

Table 4.1 Added SAR Rev. 12 and TSR Rev. 16.

Section 8.3.2.5.1.2 Added text to capture a potential transfer error associated with the transfer line from the canyon to F1-3 and F1-4 identified in the PuCS JCO and show why B-Basins and F1-3 are classified differently. Clarified which column the 800 g limit refered to.

Section 8.3.3 Revised to reflect that with completion of Project CL03002, visual inspection of 292-H Old HB-Line Exhaust System is no longer required.

Tables 8.3-2, 8.4-1, 8.4-3 Added F1-6 Basin as a Design Feature to these tables.

Tables 8.3-2, 8.4-2, 8.4-3 Added Pu/Be Design Features to these tables.

Tables 8.3-2, 8.4-4 Revised SAC 5.7.2.3.g wording for clarity

Tables 8.3-2, 8.4-4 Revised SAC 5.7.2.10.g wording for clarity

Tables 8.3-2, 8.4-4 Deleted SAC 5.7.2.10.l since it is no longer required and added Structural Integrity Program as a preventer

Tables 8.3-2, 8.4-4 Revised SAC 5.7.2.11.d to specify limits and change dpm/ml to d/m/ml

Sections 8.4.5.7, 8.4.5.7.1, 8.4.5.7.3 Revised to reflect that no visible leaks are permitted with inspection prior to initiation of hot feed.

Section 8.4.5.19, 8.4.5.19.1, 8.4.5.19.3, 8.4.5.19.4 Revised to reflect limits in control.

Section 8.4.5.22 Deleted, no longer required.

Section 8.4.5.37.2 Added basis for 5-minute air blow

Section 8.4.5.53, Tables 8.3-2, 8.4-4 Added new SAC (TSR 5.7.2.12.l) to require a minimum nitric acid concentration to be maintained in the dissolvers when Pu/Be material is present

Addendum 5 Incorporated Addendum 5 to support processing of Pu/Be material.

EXECUTIVE SUMMARY

Safety analyses of the H–Canyon Facility and its related support facilities were conducted to determine if operation of H–Canyon to support the current and planned missions presents any undue risk to the facility and site workers, general public, or the environment.

This Safety Analysis Report (SAR) concludes that facility operations are being conducted at an adequate level of safety to protect the facility and site workers, general public, and the environment. This conclusion is based on the results of hazard and accident analyses; verification of the adequacy of controls, procedures and engineered preventive and mitigative features against a hazardous material release; and implementation of aggressive safety management programs.

This SAR provides the following information:

- A brief description of the H–Canyon and Outside Facilities H–Area (OF–H), including the HEU Blend Down Project (S–W437) processes, systems, and equipment,
- A summary of the results of selected Design Basis Accidents (DBAs) analyzed to date, and
- Discussion of risks associated with continued operation of the facilities during the safety document update process.

The facility boundaries are defined, along with a description of hazardous materials and processes conducted within this boundary. A description of significant safety–related systems and design or procedural upgrades is provided. Safety and Documented Safety Analysis (DSA) documents are identified.

H–Canyon operations have been examined to ensure the completeness and adequacy of the safety envelope. A Preliminary Hazards Analysis (PHA) was completed as a complement to other existing Safety Basis (SB) documentation to identify significant radiological and chemical hazards associated with H–Canyon and OF–H, dominant accident scenarios, release pathways, and their causes, frequencies and consequences. A second PHA was completed for the HEU Blend Down Project. This PHA was completed per the same requirements (Department of Energy [DOE] Standard [STD] 3011–94) as the existing H–Canyon/OF–H PHA. The major change is that uranium is now the dominant chemical hazard. The PHA identifies and examines existing safeguards for adequacy and recommends additional safeguards and/or analyses where appropriate. The two PHAs have been combined into one document.

Laboratory sample returns from the analytical laboratories and the Savannah River National Laboratory (SRNL) which were previously processed in F–Canyon are currently being received in the H–Canyon Truckwell and are being processed in the Low Activity Waste (LAW) System. A supplement to the initial PHA (i.e., Appendix F) was completed to address the processing of laboratory sample returns from the analytical laboratories (also known as F/H Laboratories [F/H LAB]) and SRNL in H–Canyon. This PHA used Consequence Levels versus Scenario Class as

defined in the Consolidated Hazards Analysis Process (CHAP) Methodology Manual. This new H–Area activity has minimal potential risk regarding the safety of facility and site workers, the general public, or the environment.

H–Canyon and its support facilities are classified as Hazard Category 2 based on uranium and plutonium inventories. The Safety Analysis Section in this SAR (Section 8.3) contains information about the accidents and risks associated with operation of H–Canyon and its support facilities, as defined in the PHA and in the addenda to this SAR which contain the accident frequencies and consequences. The potential impacts of normal operations and postulated accident scenarios upon facility workers, site workers, and the public are described.

Accident frequencies and consequences were placed in "risk bins," as defined by DOE–STD—3011–94. This hierarchical process helps illustrate relative risks of the various scenarios. Through this process, dominant accident scenarios were identified, and are defined as Scenario Class I and II accidents per the methodology documented in the PHA and in Section 8.2 of this SAR.

The dominant accident scenarios identified for H–Canyon and OF–H are as follows:

Class I Accidents:

- Explosions/Deflagrations: TBP/nitric acid; AN; hydrogen; or solvent tank vapor
- Fire: organic solvent; anion resin
- Inadvertent personnel radiation exposure
- Criticality in Warm Canyon and OF–H
- Releases to cooling water system due to coil and tube leak or inadvertent transfer
- Puncture wound in sample aisle
- Natural phenomena, including earthquake, tornado, and straight winds

Class II Accidents:

- Uncontrolled reaction in the Third Level of the canyon or OF–H
- Explosion: anion resin; hydrogen deflagration in OF–H
- Criticality in Hot Canyon or OF–H
- Transfer errors to the OF–H (to the ground or to basin tanks)
- External Forest/Brush (Wildland) Fire in OF–H
- Truck Fire in OF–H
- Fire in Segregated Solvent

- External event – aircraft crash

These accidents are discussed in detail in Section 8.3, and the safeguards that prevent occurrences and mitigate consequences to people and the environment are identified.

Sections 7.0 and 8.0 of this SAR present the principal aspects of the operating envelope for the accident scenarios identified in the old 1986 format SAR (i.e., developed before DOE–STD–3009–94 and 3011–94 were issued) and the PHA. The material presented provides both the preventive and mitigative features that are credited by Washington Savannah River Company (WSRC) for the various dominant accident scenarios. In defining the operating envelope of the facility, ACs, including ACs meeting the DOE-STD-1186-2004 criteria for Specific Administrative Controls (SACs), commitments to complete an action, and certain Design Features (DF) not already defined as such in the DSA documents are explicitly identified.

Section 6.0 of this SAR addresses the H–Canyon programmatic approach to safety and the safety programs. This section describes safety management goals and policies, emergency planning, fire protection, criticality safety, configuration control, measuring and test equipment, environmental compliance, occurrence reporting, review and audit, training, radiation protection, radioactive and hazardous materials control, Quality Assurance (QA), waste management, maintenance, and conduct of operations.

The DSA provides adequate controls to ensure that the H–Canyon and related facilities can be operated safely without undue safety risks to the public, to the Savannah River Site (SRS) workers, or to the environment.

This SAR and the associated DOE–Savannah River Operations (DOE–SR) Safety Evaluation Report (SER) for Revision 0 of the SAR contain specific operational restrictions on H–Canyon and OF–H. These operational restrictions are as follows:

- Frame Waste Recovery (FWR) and the Anion Exchange Columns shall not be operated for plutonium or neptunium recovery until the accident analysis has been reviewed and the appropriate ACs and Limiting Conditions for Operation (LCO) have been included in the Technical Safety Requirements.

- All material introduced for processing in the facility must be bounded by the isotopic distribution and other assumptions established by the analysis for the 3,650–day cooled Mk–22 spent nuclear fuel.

Throughout this SAR, the H-Canyon Material Disposition makes various commitments to DOE–SR to complete various actions to preserve the integrity of the accident analysis prior to certain operations. Table ES–1 summarizes all of the commitments made in this SAR.

Table ES–1 Summary of the Commitments Made in this Safety Analysis Report

Section	Page Number	Commitment
3.2	3–4	The Technical Standard (TS) limits will be included in the Technical Safety Requirements (TSRs) before any Pu–238 is processed in FWR.
8.2.1.2.5	8–20	Prior to any future start up of FWR operations, the controls necessary to ensure the earthquake induced resin fire remains a Beyond Extremely Unlikely (BEU) event will be evaluated and verified to be implemented.
8.3.2.2.1	8–42	If the Second Product Cycle is authorized for operation, during the start up activities, the process will be analyzed and the controls required to ensure safe operation, including the red oil controls, will be identified and submitted to DOE for approval.
8.3.2.2.2	8–54	Prior to start up of any future FWR operations, the TSRs and this SAR will be revised as necessary to ensure the appropriate controls are identified and implemented before process operations begin.

Table ES–2 H–Canyon Risk Analysis Summary

Accident	Mitigated Accident Frequency	Mitigated Accident Consequences/Evaluation Guidelines						
		Facility Worker(1)	Onsite Worker (Rem)			Off–site Receptor (Rem)		
			Dose	% EG	EG	Dose	% EG	EG
Fire – Organic or Solvent Material (SE–01) 1st Cycle	Unlikely	Medium	1.1E–04	< 1	100	1.0E–03	< 1	25
Criticality (TS–04, DV–10, HE–11, SE–14/16, SR–08/10, EV–12, RR–10, WD–13, HC–05, VE–12/13)	Unlikely	High	6.4E–03	< 1	100	3.9E–04	< 1	25
Explosion – Flammable Gas/Vapor Deflagration with Expulsion of Material (EV–04, HE–04, IE–03, RR–04, SE–05, WD–02)	Extremely Unlikely	Low	1.6E–01	< 1	100	9.3E–02	< 1	25
Explosion – TBP/Nitric Acid Runaway Reactions (AR–01, EV–03, RR–02, WD–04, HE-03)	Unlikely	Medium	3.1E–01	< 1	100	2.2E–01	< 1	25
Explosion – AN in Process Vessel Vent (PVV) Filters (VE–04)	Extremely Unlikely	Medium	1.0E+01	1.0E+01	100	1.5E+00	6.0E+00	25
Transfer Error to Outside Facilities (DV–04, EV–11, HE–10, IE–12, RR–08, SE–07, WD–11)	Extremely Unlikely	Medium	7.8E+00	7.8E+00	100	9.1E–01	3.6E+00	25
Inadvertent Transfer of Process Solutions to Segregated or Circulated Cooling Water (CCW) System (HC–03)	BEU	Medium	NA	NA	100	NA	NA	25
Coil and Tube Failure to SCW Return System (DV–07, EV–09, HE–07, IE–09, SE–08)	Unlikely	Low	NA	NA	100	1.1E+00	4.4E+00	25
Coil and Tube Failure to CCW Return System (DV–09, EV–10, HE–08, IE–14, SE–09, WD–07)	Extremely Unlikely	Low	3.3E+01	3.3E+01	100	3.3E–01	1.3E+00	25
Natural Phenomena – Earthquake (HC–11)	Unlikely	Medium	2.2E+01	2.2E+01	100	4.6E–01	1.8E+00	25
Ruthenium Volatilization (DV–05, HE–06)	Anticipated	Low	2.5E–01	< 1	100	3.5E–02	< 1	25
Old HB–Line (OHBL) Exhaust Duct Leak	Extremely Unlikely	Low	1.1E+00	1.1E+00	100	7.8E–01	3.1E+00	25

(1) Site evaluation guidelines for the facility worker have not been established.

Table ES–3 Outside Facilities H–Area Risk Summary

Accident	Mitigated Accident Frequency	**MITIGATED ACCIDENT CONSEQUENCES/EVALUATION GUIDELINES**						
		Facility Worker [1]	**Onsite Worker (Rem)**			**Off–site Receptor (Rem)**		
			Dose	**% EG**	**EG**	**Dose**	**% EG**	**EG**
Solvent Fire (First Cycle Segregated Solvent)	Unlikely	Medium	5.2E–01	< 1	100	5.2E–03	< 1	25
Large Fire (A–Line Tanks)	Extremely Unlikely	Medium	2.1E+01	2.1E+01	100	2.0E–01	< 1	25
Hydrogen Deflagration (EUS Tank)	Extremely Unlikely	High	9.4E+00	9.4E+00	100	1.7E–01	< 1	25
Loss of Confinement – Overflows/Spills/Leaks	Extremely Unlikely	Medium	1.0E–01	< 1	100	3.9E–02	< 1	25
Criticality	Extremely Unlikely	High	5.2E+01	5.2E+01	100	3.9E–04	< 1	25
Natural Phenomena – Earthquake	Unlikely	High	7.5E–01	< 1	100	3.9E–01	1.6E+00	25
External Event – Vehicle Crash (EUS Tank)	Unlikely	High	1.0E–01	< 1	100	3.9E–02	< 1	25
External Event – Vehicle Crash (Sample Return Trailer)	Anticipated	High	7.6E+00	7.6E+00	100	1.7E–02	< 1	25
NPH – Tornado	Extremely Unlikely	High	4.4E–01	< 1	100	3.5E–01	1.4E+00	25
Fire (Waste Tank Truck)	Unlikely	High	7.6E+00	7.6E+00	100	1.7E–02	< 1	25

[1] Site evaluation guidelines for the facility worker have not been established.

1.0 INTRODUCTION

1.1 SCOPE

This SAR is applicable to the H–Canyon Building and Outside Facilities H–Area (OF–H).

This SAR is a part of the implementation plan for bringing the H–Canyon and related facilities into compliance with Title 10, Code of Federal Regulations (CFR), Subpart 830, and is being prepared in accordance with Standards/Requirement Identification Document (S/RID) Functional Area 18 (Ref. 1) and DOE–G–421.1–2 (Ref. 2) and submitted according to the Compliance Schedule Approval in 10 CFR 830.

1.2 FACILITY BACKGROUND

The H–Canyon and related support facilities were constructed in the 1950s. The original mission of these facilities was to process irradiated uranium target assemblies to recover plutonium for national defense purposes. The facilities were later modified to process enriched uranium fuels and neptunium targets.

H–Canyon production activities are to be completed in 2006 to support the Defense Nuclear Facilities Safety Board 94–1 schedule as modified by the 2000–1 schedule. Processing of existing unirradiated fuel assemblies will also conclude in 2006. All of the irradiated SRS reactor fuels have been dissolved and processed. H–Canyon will receive Pu–239 solution from HB–Line for storage and future processing or disposal. The Pu–239 solution received from HB–Line is from the HB–Line dissolution of plutonium bearing scrap materials from the SRS FB–Line. Additionally, excess HEU from other DOE facilities and offsite fuels may be processed. Currently, the HEU produced by H-Canyon process operations is being diluted to less than a 5% U–235 enrichment and the diluted solution is being transferred to the Tennessee Valley Authority (TVA) who will use it to make fuel for reactors. Natural Uranium (NU) received from an offsite source will be used to blend down the HEU.

Laboratory effluent and F-OF rainwater are also being processed in H–Canyon. Laboratory sample returns from the analytical laboratories (Buildings 772–F and 772–1F) and the SRNL, which used to be processed in F–Canyon, are delivered to the H–Canyon Warm Canyon Truckwell Airlock in trailers. The solutions are transferred into the Warm Canyon and processed in the LAW System.

Transuranic waste is currently being stored at SRS in Large Steel Boxes (LSBs) (formerly referred to as Black Boxes because of the black colored insulating material applied to the exterior of the containers). The LSBs are being transferred from the Solid Waste Management Facility (SWMF) to H-Canyon. The waste in the LSBs is being repackaged into Standard Large Boxes (SLBs) that can be shipped offsite for final disposition.

1.3 STATUS OF DOCUMENTED SAFETY ANALYSIS

This SAR integrates the existing SB documentation, including the PHA and intermediate SB documents such as the Justification for Continued Operation (JCO), to demonstrate an adequate level of safety assurance for the planned operations in this facility. This is done by a discussion of the safety management program, an integrated safety evaluation, and presentation of the safety envelope. Additionally, corrective or compensatory measures are discussed for identified vulnerabilities. This SAR provides the SB for continued operation of H–Canyon and OF–H.

New requirements contained throughout the SAR are explicitly identified and categorized. These requirements are noted in **bold** typeface and categorized as Commitments **(C)**. Bold type is used to allow easy identification of requirements. The ACs, except those that identify programmatic controls (e.g., Radiation Control, As Low As Reasonably Achievable [ALARA], Maintenance, etc.), required in the SAR are incorporated into the Linking Document Database (LDD). The programmatic controls identified in the SAR and in the TSR AC Section do not have to be specifically identified in the LDD. However, where specific actions from a programmatic control are identified in the SAR or TSR, these specific actions shall be captured in the LDD (e.g., requirement to wear specific dosimetry). Additionally, all outstanding commitments identified in the SAR have been captured in the H–Area Completion Project (HCP) Issues/Commitment Tracking System.

1.4 REFERENCES

1. Standards/Requirement Identification Document (S/RID). WSRC–RP–94–1268, Westinghouse Savannah River Company, Aiken, SC.

2. Implementation Guide for Use in Developing Documented Safety Analyses to Meet Subpart B. DOE–G–421.1–2, U.S. Department of Energy, Washington, DC, October 4, 2001.

2.0 FACILITY AND PROCESS DESCRIPTION

2.1 BACKGROUND AND APPLICATION TO THE UNREVIEWED SAFETY QUESTION PROCESS

The facility and process descriptions given in this SAR are short narrative descriptions intended to give the reader a brief overview of H–Canyon, Outside Facilities H–Area, and the processes and operations conducted in these facilities. As such, all the equipment, process controls, operating and maintenance procedures are not explicitly described in the SAR description of the facility and the processes. Any Structure, System, and Component (SSC), facility, process, equipment, instruments, controls (administrative or otherwise), and any procedure (which is not categorically excluded) that can affect the safety envelope and are necessary to safely operate H–Canyon, OF–H, and associated facilities, that are in place when this SAR is approved, are implicitly included in the following facility and process descriptions and are to be used in determining if a proposed activity requires an Unreviewed Safety Question Evaluation (USQE). Any SSC included in the system boundary limits, or any support system without which the supported system will not function correctly, even if not explicitly described in this SAR, are considered to be a part of the Safety Class (SC) or Safety Significant (SS) system. Changes to the SSCs or support systems should be evaluated by the Unreviewed Safety Question (USQ) process as if they are changes to the SC/SS system itself. The system boundaries and important technical characteristics (e.g., temperature, pressure, voltage, flow rates) are determined by the appropriate Design Authority or H–Canyon Engineering. The system boundaries, to include all the components within the boundaries, and most of the detailed technical system characteristics are not included in the SAR system descriptions for brevity and to avoid putting excessive technical details in the SAR. These system boundaries and technical characteristics are the factors relied upon in designating the SSC as a SC or SS system for inclusion in the SAR accident analysis and the TSR to prevent or mitigate an accident. Changes to the components in the system boundaries and the system technical characteristics must be considered for their impact upon the ability of the SC/SS system to perform its designated safety function.

2.2 H–CANYON OVERVIEW

The H–Canyon Building is located near the center of the SRS in H–Area. The nearest site boundary to H–Area is approximately 7.5 miles to the west. A detailed description of the geography, demography, meteorology, hydrology, and seismology of the SRS is provided in Chapter 1 of Reference 1.

The H-Canyon Building is a radiochemical processing plant. The process operations conducted in H–Canyon are called the H–Modified (HM) process. Operations conducted in H-Canyon include the separation and recovery of uranium, plutonium, and neptunium from irradiated fuel and targets, and purification of Plutonium–238 in support of HB–Line. The process equipment is located in two parallel canyons, a “Hot” and a “Warm” Canyon, separated from each other by a central operating and service section that is divided into four levels. (See Figure 2 in Chapter 10.) The four levels and the areas or activities on each level in the Central Section of H–Canyon are:

- Fourth Level – control room and general office space, OHBL process rooms.
- Third Level – feed tank gallery, sample aisles, OHBL process rooms.
- Second Level – pipe gallery, mask and tool decontamination room, canyon air supply fan room.
- First Level – change rooms, services, maintenance facilities, electrical control rooms, Heating, Ventilation, and Air Conditioning equipment, and office space.

The more highly radioactive processing operations are performed in the Hot Canyon; these operations include dissolution of irradiated materials, precipitation and centrifugation, bulk fission product separation, ion exchange, and High Activity Waste (HAW) evaporation.

The final purification of the product streams and LAW evaporation are performed in the Warm Canyon. Equipment and fuel are transported and manipulated by remote cranes.

References 2 through 7 provide detailed descriptions of the H–Canyon and OF–H processes and equipment**.** In addition to the references, updated process and equipment descriptions are included in the instruction guides (student handouts) used to train and qualify the process operators and the Shift Technical Engineers (STEs). These instruction guides are available from the H–Canyon training personnel. The following sections are brief summaries of the processes. Section 1.2.2 of Reference 6 provides details on the canyon structure. It also provides a photograph showing the Warm Canyon and a diagram of a typical canyon section plan (see Figure 2 in Chapter 10).

Tables B–2 and B–3 of Reference 6 give the typical dimensions of the H–Canyon process vessels. This information, combined with Table 8.1–3 of this SAR, provide the equipment dimensions and capacities. The canyon equipment is typically made of 304L stainless steel. The equipment ranges in age from approximately 5 to over 50 years old. Some equipment is the original equipment installed in the canyons in the early 1950s, while other pieces have been replaced with new equipment or removed entirely. Section 1.3 of Reference 6 provides descriptions of the major canyon equipment including either drawings or photographs of the equipment.

The OF–H equipment is described in Chapter 3 of Reference 5. The tank and vessel sizes are included in the process description sections in this document.

The cited references provide an excellent historical and general description of the H–Canyon and OF–H processes and equipment. However, to ensure that the most up to date information is available in determining the applicability of the systems or equipment for use in the accident analyses, the system descriptions must be verified as accurate by H–Canyon Engineering.

2.3 FUEL RECEIPT AND STORAGE

Incoming uranium fuel elements are received by truck or railroad cask cars and picked up by the H–Canyon crane in the railway tunnel and charged directly to the dissolvers. The irradiated fuel

elements can be temporarily stored in a basin adjacent to the Railroad Tunnel prior to charging. In addition to uranium fuel elements, the facility can also receive miscellaneous fuel and target material from other sources for charging directly to the dissolvers. Typical activities in the Fuel Receipt and Storage Areas include:

- Railroad tunnel receipt of equipment for installation in the Hot Canyon,
- Interim storage of targets and fuel in bundle storage racks, if permitted,
- Removal of failed equipment and solid waste from the Hot Canyon, and
- Radiation monitoring and decontamination of the cask cars and large waste containers as necessary.

Personnel access to the Railroad Tunnel and Fuel Receipt and Storage Areas is controlled to limit personnel movement and access to only those personnel with a bona fide need to be in this area. The access is controlled by canyon procedures and the Radiation Work Permit (RWP) process. Personnel access is limited to prevent unnecessary personnel exposure in the event that the Railroad Tunnel Shielding Door, the Hot Crane Maintenance Door, or the cask car lid is inadvertently opened when irradiated material is being handled.

The major equipment supporting this process includes the Railroad Tunnel and airlock, truck or rail cask cars, fuel shuttle carts, overhead cranes, fuel storage basins, and a shielded battery–powered electric locomotive.

See Reference 4, Section 3.2.2.1, and Reference 6, Section 1.3.1.1, for additional information.

2.4 FUEL DISSOLVING

The fuel dissolving operation dissolves the aluminum–clad uranium fuel elements in nitric acid with a mercury catalyst. For various other campaigns, uranium or plutonium metal or oxide scrap is dissolved utilizing a fluoride catalyst instead of mercuric nitrate. These other campaigns are usually accomplished under a JCO. The resulting solution is the raw feed stock for the separation process. The main components of the fuel dissolving system are two large chemical dissolvers and their condensers and their associated Dissolver Offgas Systems, which include iodine reactors and particulate filters. The iodine reactors are operated to maintain the offgas system within its designed operating limits, but are not operated for iodine removal when processing unirradiated HEU.

See Reference 4, Section 3.2.2.2, and Reference 6, Section 1.3.1.2, for additional information.

2.5 FEED PREPARATION OR “HEAD END”

The Head End, or feed preparation, operation prepares the raw feed stock for processing. A primary function of the Head End operation is to remove silica present in the dissolved feed solution by precipitation with gelatin. Silica is removed to prevent formation of solids that cause emulsions in solvent extraction equipment during later processing.

Solution is transferred to Tank 11.2 from either 6.4D Dissolver via 8.3, 6.1D Dissolver via Tank 12.1 or 7.4, or HB-Line via Tank 11.1 per an engineering prescribed blending formula. This ensures that First Cycle feed requirements, such as maximum U-235 enrichment, are met.

The solution is then concentrated by evaporation to provide the proper aluminum concentration. In previous campaigns, a permanganate "strike" step was included for zirconium or niobium removal. The permanganate strike is no longer required because irradiated fuel is no longer processed. Therefore, the precipitation step may immediately follow the evaporation step. The Head End operation includes centrifuging to remove the precipitate and washing and disposal of the centrifuge cake.

Equipment used in the precipitation process includes solution makeup tanks, a strike tank, and the ruthenium absorber off–gas filter. The ruthenium absorber off–gas filter was used to remove any ruthenium volatilized and released during the permanganate strike previously used in the Head End process. Equipment used in the concentration step includes an evaporator feed tank, an evaporator, an evaporator concentrate hold tank (which serves as the strike tank), and a condensate collection tank. The centrifuge process uses cold feed tanks, high–pressure spray pumps, a centrifuge, and a centrifuge run tank for receiving centrifuge solution.

See Reference 4, Section 3.2.2.5, and Reference 6, Section 1.3.1.3, for additional information.

2.6 SOLVENT EXTRACTION

In the solvent extraction process, uranium and plutonium or neptunium are recovered from the feed solution in a series of process cycles. They are extracted from the feed solution and decontaminated from fission products. Then the uranium, plutonium, or neptunium is separated from each other. All three solvent extraction cycles use tributyl phosphate (TBP) in an n–paraffin diluent to extract actinides from the fission products or the other actinides in one mixer–settler bank of the cycle. The extracted actinides are stripped from the solvent using a weak nitric acid solution in another bank to continue the downstream processing operations. The solvent extraction cycle is a solvent extraction–acid strip process.

The solvent extraction process includes a "First Cycle" and two "Second Cycle" operations. The First Cycle system is located in the Hot Canyon, and both Second Cycle systems are located in the Warm Canyon. These cycles are described separately below. See Reference 4, Section 3.2.2.6, and Reference 6, Section 1.3.1.4, for additional information. Both references contain drawings of decanters and mixer–settlers. Additionally Reference 6, Tables C–1 and C–2, provide dimensions on the mixer settlers.

2.6.1 SOLVENT EXTRACTION – FIRST CYCLE

Prior to First Cycle processing, the clarified Head End solution is adjusted to the proper aluminum and nitrate concentrations with nitric acid and water. The functions performed by the First Solvent Extraction Cycle are: 1) decontaminate the feed solution to remove fission products and chemical impurities; and 2) separate the feed solution into two individual streams: one stream containing uranium, and the other stream containing neptunium or plutonium. The

primary equipment used in the First Cycle includes three mixer–settlers (1A, 1B, and 1C), an adjustment tank, a feed tank, two decanter tanks, and two run tanks. The First Cycle solvent is a solution of a nominal 7.5 vol. % TBP in an n–paraffin diluent.

The H–Canyon First Cycle control system is based on a Programmable Logic Controller (PLC). The PLC process control system provides alarms and interlocks that react when the limits established in the accident analysis are challenged. These alarms and interlocks are functionally classified as SS. The PLC is a digital based control system that monitors and/or controls the flow, temperature, neutron flux, and colorimeter loops for the 1AF, 1AX, 1AS–acid, 1AS–FS, 1BS, 1BX, 1CU, and 1CX streams. The flow and temperature controls are combined with the safety interlock functions in a single PLC unit. An operator interface is located in the H–Canyon control room. The temperatures of the streams noted above are monitored by a Resistance Temperature Device (RTD). The 1CU stream uranium concentration is monitored by the colorimeter. The mixer–settler banks are monitored to detect a reflux condition in the banks by neutron monitors that detect an increase in the neutron flux caused by a fissile material increase in the mixer–settlers. The neutron monitors have a 1 Curie (Ci) neutron source to provide a multiplication source. A readily discernible signal increase is apparent at abnormally high uranium concentrations. The high–high colorimeter and high–high neutron monitor interlocks shutdown the First Cycle process through SCRAM action, which de–energizes the impellers and closes the steam and flow control valves, places the feed jets in air blow, and de–energizes all feed stream pumps. The PLC and its associated components were installed as SS items under a Quality Assurance Plan (QAP). The PLC software was rigorously tested under a formal Software Test Plan.

2.6.2 SOLVENT EXTRACTION – SECOND URANIUM CYCLE

The Second Uranium Solvent Extraction Cycle purifies the uranium product in the aqueous stream from the First Solvent Extraction Cycle. The primary equipment in the Second Uranium Cycle includes two mixer–settler banks, two batch evaporators (17.2E or 17.6E), two feed adjustment tanks, three feed tanks, one decanter tank, four hold tanks and one run tank.

The HEU Blend Down Project with its purity specifications and increased throughput requirements has necessitated several revisions to the 1EU portion of the 2nd Uranium Cycle. At the start of initial processing, two passes were required through the 2nd Uranium Cycle to decontaminate the irradiated uranium solution. When unirradiated fuel is being processed only one pass is required. The remaining entrained solvent is removed in the decanter and the solution stream is concentrated in a batch evaporator and transferred to OF–H for storage and subsequent processing.

The Second Uranium Cycle solvent is a solution of nominal 7.5 vol. % TBP in an n–paraffin diluent. The Mixer–Settler banks (1D and 1E) are monitored to detect a reflux condition in the banks by two pair of neutron monitors that detect an increase in the neutron flux caused by a fissile material increase in the Mixer–Settlers. The neutron monitors have a 1 Curie (Ci) neutron source to provide a multiplication source. A readily discernible signal increase is apparent at abnormally high uranium concentrations.

2.6.3 SOLVENT EXTRACTION – SECOND PRODUCT CYCLE

The Second Product Cycle is not authorized for operation. The following text is included for historical information about the HM Process.

The Second Product Solvent Extraction Cycle further decontaminates and concentrates neptunium or plutonium that is separated from uranium in the First Cycle. The primary equipment in this cycle includes two mixer–settlers (2A and 2B), one evaporator and eleven process tanks. During plutonium processing operations, an n–paraffin product wash tank is also included following the solvent extraction. The Second Product Cycle solvent is a solution of a nominal 30 vol. % TBP in an n–paraffin diluent.

2.7 SOLVENT RECOVERY

There are three separate Solvent Recovery systems, one for each of the solvent extraction cycles. The Solvent Recovery operation removes radioactive contaminants and chemical degradation products from the used organic solvent. The recovered solvent is reused in the solvent extraction process. The Solvent Recovery systems recover used solvent by successive alkaline and acidic wash solutions. All alkaline washers are located in the Warm Canyon; and all acidic washers are located outside of the canyon in OF–H.

The First Cycle, Second Uranium Cycle, and the Second Product Cycle Solvent Recovery systems are located in the Warm Canyon and behind shielded walls. The acid washers for the three Solvent Recovery systems and the solvent hold tanks are located in the Segregated Solvent Area of OF–H. The major components in the Solvent Recovery systems include the following:

- First Cycle Solvent Recovery system: two alkaline wash tanks in series with attached blister pump tanks, one acidic wash tank, one washed solvent hold tank, one spent wash receipt tank, and a spent wash decanter.

- Second Uranium Cycle Solvent Recovery system: one alkaline wash tank with attached blister pump tank, one acidic wash tank, one washed solvent hold tank, one spent wash receipt tank and one spent wash decanter. The wash receipt tank and the decanter are shared with Second Product Solvent Recovery.

- Second Product Cycle Solvent Recovery system: one alkaline wash tank with attached blister pump tank, one acidic wash tank, one washed solvent hold tank, and one spent wash receipt tank and spent wash decanter. The wash receipt tank and the decanter are shared with Second Uranium Solvent Recovery.

- The wash tank, an agitated tank, is used to thoroughly mix the solvent with sodium carbonate to start the solvent recovery process. The blister tank is a small tank attached to the wash tank into which the solvent overflows. The solvent is pumped from the blister tanks to the other Solvent Recovery vessels to 211–H.

2.8 WASTE CONCENTRATION

Liquid wastes from separations processes include HAW, LAW, Frame Waste, decontamination waste, and miscellaneous wastes. The waste is mass and concentration controlled during neutralization to below the "ever–safe" Criticality Safety Limits (CSLs). Most of these wastes are concentrated by evaporation with batch evaporators. The acidic concentrated waste is neutralized with excess caustic and transferred to the High Level Waste (HLW) Tank Farms. The HAW waste concentration system has two evaporators that operate in parallel to concentrate Hot Canyon waste and sump solutions. The LAW system has three evaporators that are operated in parallel to strip and recover nitric acid from Warm Canyon LAW streams and sump solutions. Miscellaneous wastes are received from HB–Line for evaporation and disposal to the HLW Tank Farm. See Reference 4, Section 3.2.2.8, and Reference 6, Sections 1.3.1.5, and 1.3.1.8, for additional information, including evaporator descriptions and diagrams. The safety controls for the HAW, LAW, and components of other systems were modified to include a new PLC as part of upgrading the Distributed Control System (DCS). These modifications were evaluated for SB implications in USQ–HCAN–2002–00748 (Ref. 14). The control of the normal process operations and parameters and the credited safety functions are by independent equipment. The DCS controls the normal process operations and parameters. No SC or SS functions are controlled by the DCS. A PLC that has been qualified as SS was installed in the H–Canyon Control Room to control the SS functions and parameters. The SS sensors, alarms, and interlocks are hard wired to non–programmable terminals on the PLC. When the PLC senses that the alarm or interlock setpoints are reached, the PLC automatically activates the interlocks or alarms. The DCS does not activate the SC/SS interlocks or alarms. However, there is an interface between the PLC and DCS through isolated transducers (or equivalent devices) that provides the operator with read outs on the DCS display of the trending, alarming, and data collection associated with the SS alarm and interlock functions.

Part of the waste concentration and removal of the liquid radioactive waste from H–Canyon involves transferring the concentrated waste to the HLW waste tanks in the H–Area Waste Tank Farm. The transfer to the HLW tanks is made through a transfer pipeline that runs from the H–Canyon wall through a transition box to the HLW tanks. H–Canyon is responsible for, or "owns," the waste transfer line from the H–Canyon wall to the inlet of the transition box. The transition box and the portion of the transfer line from the transition box to the HLW tanks is the responsibility of or "owned" by the HLW Division.

The HLW tank farm accident analysis makes certain assumptions about the characteristics of the waste received in the HLW tanks. One of these characteristics is the temperature of the liquid waste entering the tanks. To protect the HLW accident analysis temperature requirements, H–Canyon must ensure that the temperature and other characteristics of the waste transferred from H–Canyon to the HLW Division Waste Storage Tanks meet the HLW accident analysis and Waste Acceptance Criteria (WAC). The controls necessary to ensure that the HLW requirements are met are included in the Waste Acceptance Criteria, X–SD–G–00001. Additional information is included in Section 6.18 of this SAR.

The laboratory sample returns and F-OF rainwater are received in H–Canyon for processing or disposal as waste. These wastes are trucked from their respective areas, are pumped from tank/transport trailers, and transferred to the Sample Returns Receipt Tank 10.5, located in the

Warm Canyon, where it is held for subsequent processing. These waste solutions are decanted to remove any entrained organic solvent, and concentrated in the LAW evaporators.

The Warm Canyon Truckwell Airlock was modified to accommodate only one LR–56 trailer or HAW (Sample Returns) Transport Trailer (HAWTT) at a time. Since the trailers have different configurations, a flexible hose is used in the airlock to pump sample returns from the trailers. The pumped sample returns are transferred to a jacketed 304L stainless steel pipeline. The transfer pipeline, which includes an unused CCW line, is connected to Sample Return Receipt Tank 10.5. Tank 10.5 is supplied water and nitric acid. Tank 10.5 has no source of precipitants (e.g., caustic) from the cold chemical Head Tanks, nor is it supplied with steam. This tank is connected to Hold Tank 11.8 in the LAW system for subsequent processing operations. Tank 11.8 may receive other miscellaneous process streams that require analysis before receipt.

2.9 RERUN

The principal functions of the Rerun operation are to convert off–standard process streams (e.g., sump materials that contain recoverable amounts of product) to solutions that are suitable for product recovery, if possible, and to concentrate and dispose of these aqueous streams. Actinide materials, if present in sufficient quantities, are recovered by batch extraction, transferred to Head End, and combined with dissolver solution. All Rerun processing is done in batches. Each batch received in Rerun is considered individually. Processing of the batch depends upon the analytical results of the process samples and requires the collective judgment of Operations and Engineering personnel.

The major components of the Rerun system include a batch evaporator, a box decanter, and normal canyon tanks. The box decanter is essentially a normal canyon decanter lying on its side. The box decanter looks similar to a mixer–settler stage. The mixed stream to be separated enters the decanter at one end. As it flows through the decanter, the heavier aqueous settles to the bottom while the lighter organic floats to the top. The aqueous stream goes under an underflow weir and leaves the decanter at the opposite end from the entrance point, while the organic goes over an overflow weir and exits the decanter.

See Reference 6 Section 1.3.1.7 for additional information. The high level alarm for the Decanter 9.7 organic phase weir was modified to include a new PLC, and evaluated in USQ–HCAN–2002–00748 (Ref. 14).

2.10 FRAME WASTE RECOVERY

FWR is not authorized for operation. The following text is included for historical information.

H–Canyon previously had the “H–Frames” process as one of the unit operations. The H–Frames process was used to recover Neptunium (Np) 237 and Plutonium (Pu) 238 from NpO_2 – Al targets. The Frames process used an anion exchange process to recover Np–237 and Pu–238 from the process solution. The targets were dissolved in the Frames dissolver. Three ion exchange columns using anion type exchange resin were used to separate the neptunium and plutonium. Column RC–1 was used to separate the Np–237 and Pu–238 from the fission

products. Column RC–2 separated the Np–237 from the Pu–238 and further decontaminated the neptunium. The third column, RC–4, decontaminated the Pu–238 from the ferric ion and the residual fission products. Losses in the waste from the Frames operation were recovered by FWR anion exchange Column RC–16. All of the Frames process equipment, except for the RC–16 column, has been removed and the Frames process is no longer operational. The RC–16 column is still in place and could be used to decontaminate and purify Pu–238 from HB–Line, if required.

In the FWR system, dissolved scrap from HB–Line Phase I and filtrates from HB–Line Phase III are processed through anion exchange column RC–16 to purify Pu–238. The purified Pu–238 is returned to HB–Line Phase III for product processing. Waste from HB–Line Phase III is returned to the canyon for recovery of any Pu in the waste. FWR system column raffinates are processed through the Rerun evaporator or LAW waste concentration system to recover nitric acid. The major process equipment is located in the Hot Canyon and includes several tanks and a single–stage ion exchange resin column. Current H–Canyon operational plans do not require FWR operations to process Pu–238.

See Reference 4, Section 3.2.2.7, and Reference 6, Section 1.3.1.6, for additional information.

2.11 NEPTUNIUM/PLUTONIUM STORAGE

The Pu-239 solutions from HB-Line or H-Canyon dissolution can be stored in H-Canyon. Neptunium solutions remaining after Frames shut down, and other neptunium solutions recovered from irradiated plant and offsite fuels are also stored in H–Canyon. There are no plans to process more Pu–238 material. Waste from the previous Pu–238 and Pu–242 solutions has been transferred to the Waste Tank Farm as waste.

2.11.1 NEPTUNIUM PROCESSING

The purified Np–237 solution currently stored in H-Canyon will initially be transferred to HB–Line for subsequent processing into an oxide in HB–Line Phase II. Operational or process solutions (e.g., raffinate) will be transferred from HB–Line to H-Canyon, as required.

See Section 6.5.3 for additional information. CSLs will not be listed in the Double Contingency Analysis (DCA) tables or in the TSR because Second Product Cycle is not approved to operate.

Currently H–Canyon is receiving and storing Pu–239 solutions from Pu containing materials that have been dissolved and processed in HB–Line. These operations involve transferring the existing stored Pu–239 solutions to other H–Canyon tanks and the receipt, storage, and disposition of new material from HB–Line. The transfer, storage, and disposition activities are adequately protected by the existing DSA documents. Future missions may include the receipt of EU from HB–Line for further processing. As required, H–Canyon will supply the Pu–239 feed solutions for HB–Line Phase II activities and process the column raffinate/filtrate as waste or recycle back to HB–Line as necessary. The spent resin from HB–Line will be processed as waste.

2.12 REPACKAGING OF WASTE STORED IN LARGE STEEL BOXES

Transuranic waste is currently being stored at SRS in LSBs. The LSBs are being transferred from the SWMF to H-Canyon. The waste in the LSBs is being repackaged into SLBs that can be shipped offsite for final disposition. The repackaging effort entails removing waste from the LSBs contained in plywood boxes and waste bags, and possibly some loose waste and repackaging the waste into SLBs for shipment back to SWMF. Refer to Addendum 3 for the evaluation of the consequences of applicable Safety Analysis accidents in support of repackaging activities.

2.13 SAFETY SYSTEMS

Radioactive material is confined by the combination of the canyon structure and the ventilation system, including the Sand Filter and Exhaust Stack. All accidents, except for criticality accidents, analyzed in this H–Canyon SAR and SAR Addendum that result in a stack release take credit for the filtration effect of the sand filter. SC and SS systems for H–Canyon and OF–H are listed in the tables in Section 8.0. References 4, 5, and 6 contain additional descriptions of the major safety systems, such as the water monitors and canyon ventilation systems.

2.14 OUTSIDE FACILITIES H–AREA (OF–H)

OF–H provides general support for 200–H Area operations, principally H–Canyon. The OF–H processes include A–Line, Enriched Uranium Storage (EUS) Tank, Bulk Chemical Storage, Cold Feed Preparation, Water Handling, Acid Recovery Unit (ARU), GP Evaporation, and Segregated Solvent facilities. Low Level Waste (LLW) containers (e.g., Sealands, B-25s, B-12s, roll pans, and pot boxes) are also temporarily stored or staged at OF-H in support of H-Canyon activities. Chapter 3 of Reference 5 provides additional information on OF–H processes, vessel types, sizes, and capacities.

2.14.1 A–LINE

The H–Area A–Line receives a dilute aqueous uranyl nitrate product solution enriched in U–235 from H–Canyon. The uranyl nitrate solution is stored in A–Line and EUS tanks. A–Line is comprised of stainless steel storage and loading tanks and various pipes, pumps, valves, and other equipment by which uranyl nitrate product solutions are transferred, mixed, and stored.

NU to support the HEU Blend Down Project is received in tank trailers from offsite sources and temporarily stored in A–Line. The NU is used to blend down the HEU to less than 5 wt% U–235 Low Enriched Uranium (LEU). HEU solution containing about 10 g/l total U is transferred from canyon evaporation to either Tank B3–1 or B3–2. Solution is sampled in the B3 Tanks. If it meets LEU product specifications, it can be transferred directly to Tank F1–5 for blending with NU. If it is not needed immediately for blending, it is transferred to Tank E4–2 or EUS for storage until it is required for blending. Off specification HEU solution is transferred to the EUS Tank for storage. The HEU solution in Tank E4–2 is transferred to F1–5 for blending as required. NU solution in Tanks E3–1 or E3–2 is also transferred to Tank F1–5 to be blended

with the HEU to form the LEU solution. The LEU in Tank F1–5 is transferred to Tank E1–1 for temporary storage before it is transferred to the E1–2 LEU Measuring Tank. From Tank E1–2, the LEU solution is gravity drained to the shipping containers for shipment to the TVA fuel fabrication vendor. Tanks F1–3 and F1–4 are used as LEU surge capacity tanks or to receive material that must be removed from the LEU shipping containers. The off specification material in the EUS Tank will be transferred back into the canyon for additional processing before it is blended into LEU product. The analysis of the HEU Blend Down Process is included in this SAR as Addendum 2. The accident analysis uses a blended isotopic that bounds the Depleted Uranium (DU), NU, HEU, and blended LEU isotopic content.

A second Basin Transfer Tank, B3–2 (capacity ~ 3,925 gallons) and a LEU Measuring Tank, E1–2 (capacity ~ 250 gallons) were new tanks added to support the HEU Blend Down Project in A–Line. A new Type B shipping container (designed to hold a nominal 230 gallons) is approved by the Nuclear Regulatory Commission (NRC) and included in the accident analysis because up to 18 containers (nine containers per trailer) are envisioned for routine operations in H–Area. Typically, one trailer will be in the LEU Loading Station and one or more trailers may be in the LEU Trailer Staging Area with containers full of LEU waiting to be shipped to the TVA vendor.

2.14.2 ENRICHED URANIUM STORAGE TANK

The primary purpose of the EUS Tank is to provide additional storage for approximately 163,000 gallons of liquid uranyl nitrate solution transferred from H–Canyon and A–Line tanks. The EUS Tank is used to store uranium solution that requires further purification and off specification LEU.

2.14.3 BULK CHEMICAL STORAGE

The Bulk Chemical Storage Facility receives, stores, and dispenses new chemical supplies for the area processes. Eleven tanks and various support tanks are located in the Bulk Chemical Storage Facility. Nitric acid, TBP, n–paraffin, aluminum nitrate, and sodium hydroxide are stored for use in the H–Canyon, HB–Line, and OF–H processes. Liquid chemicals received by rail or truck are stored in 9 ft x 36 ft horizontal tanks and pumped to the facility via pipelines. Nitric acid and sodium hydroxide are also loaded into 55–gallon drums and dumpsters at the Chemical Loadout Station, located in the Cold Feed Preparation Facility, for transport to the Defense Waste Processing Facility (DWPF), and SRNL. The nitric acid and aluminum nitrate are stored in stainless steel tanks; other chemicals are stored in carbon steel tanks.

2.14.4 COLD FEED PREPARATION FACILITY

The Cold Feed Preparation Facility (Building 222–H) is the makeup area for cold feed (i.e., non–radioactive solutions or chemicals) process chemicals. These cold feed chemicals are transferred to the canyon for process operation. Principal equipment includes eleven stainless steel tanks, each with a dedicated transfer pump, agitator, and filter. Chemicals handled in the Cold Feed Preparation Facility include nitric acid, sodium carbonate, sodium nitrite, mercuric nitrate, boric acid, potassium permanganate, manganous nitrate, potassium fluoride, and ferrous sulfamate.

Project S–Y124 (Truck Unloading and Loadout for Cold Chemicals, 211–H) modified the 222–H Facility to supply the site with the necessary cold chemicals for processing in H–Canyon, HB–Line, DWPF, and SRNL. Cold chemicals were previously supplied to the site by F–Area's Cold Chemical Small Batch Supply Stations, which have been deactivated. Modifications to the OF–H Cold Feed Preparation Facility include the installation of a ferrous sulfamate unloading station and a chemical loadout station. Nitric acid, sodium hydroxide, ferrous sulfamate, and sodium nitrite are loaded into 55–gallon drums and dumpsters at the Chemical Loadout Station, for transport to HB–Line, DWPF, and SRNL.

2.14.5 WATER HANDLING FACILITY

The Water Handling Facility receives demineralized water from the powerhouse and prepares acidified water for the H–Canyon process. The Water Handling Facility receives rain water from Segregated Solvent sumps, acidic wash solution from Segregated Solvent, basic and floor drain tanks in the Cold Feed Preparation Area, and other miscellaneous sources. Skimmers separate the solvent and aqueous phases and discharge the skimmed solvent to a hold tank. The aqueous phase from the skimmer is processed through the GP Evaporator. The primary equipment in the Water Handling Facility includes two skimmers, a skimmed solvent hold tank, two acidified water storage tanks, and three wastewater storage tanks.

2.14.6 ACID RECOVERY UNIT

The ARU concentrates nitric acid from about 5% to nominally 50% for reuse. The dilute acid comes from the overheads of acidic evaporation of various canyon process solutions. The ARU principal component is a reduced–pressure, fractional distillation column, with a reboiler and associated feed and storage tanks. The ARU product system is connected to sources of process water and 64% nitric acid to adjust the product concentration as needed to 50%. ARU overheads are transferred to the Effluent Treatment Project (ETP).

2.14.7 GENERAL PURPOSE EVAPORATOR

The GP Evaporator concentrates low–level radioactive alkaline aqueous wastes. The principal GP system components are an evaporator, a preheater and associated feed, hold, and storage tanks. The GP Evaporator, a flash evaporator, operates under reduced pressure with forced bottoms circulation. Concentrates are pumped to the Waste Tank Farm; condensates are pumped to holding tanks for disposal in the ETP.

2.14.8 SEGREGATED SOLVENT FACILITIES

The Solvent Recovery process removes degradation products and radioactive contaminants from spent solvent, neutralizes alkalinity from entrained carbonate washes, and returns the treated solvent to the extraction process. Principal equipment items are six tanks, two of which are shielded by concrete. Three tanks receive acid wash solution from Cold Feed Preparation, mix it with used solvent, then separate the solvent allowing it to overflow to a hold tank. Clean

solvents are pumped back to the canyon for reuse, and wash solutions are pumped to the water handling facility for treatment or disposal.

2.15 SEPARATE FACILITIES HOUSED WITHIN H–CANYON

2.15.1 OLD HB–LINE FACILITY

The OHBL Facility is housed in Sections 1 through 4 on the Third and Fourth Levels of the H-Canyon Building. The Third and Fourth Level Ventilation Exhaust System was reconfigured under Project CL03002 and is described in more detail in Section 2.16.6. Process operations in the OHBL were permanently suspended in 1983, with decommissioning and deactivation activities commencing in 1984. As part of the HB-Line Phase II process, equipment in Room 410N is used to receive neptunium or dilute fissile plutonium nitrate solutions from H-Canyon and adjust the valence prior to transferring to the Sixth Level for further processing. Chemicals essential for the valence adjustment process occurring in Room 410N, as well as, the Cold Feed Preparation process chemicals are stored on the Third and Sixth Levels. Leak detection instrumentation on jacketed process piping is provided on the Third Level. Other non-process rooms on the Third and Fourth Level are in various stages of decommissioning and deactivation, and provide no direct process support function to the HB-Line Facility process operations, other than waste storage and handling.

Confinement and shielding on the Third and Fourth Level is provided by gloveboxes and the outer reinforced concrete walls of the H-Canyon building structure. Third and Fourth Level gloveboxes are maintained at a slightly reduced pressure relative to process rooms to ensure any leakage is into the glovebox and not out into the room. Third and Fourth Level process rooms and gloveboxes are exhausted through High Efficiency Particulate Air (HEPA) filters by the OHBL exhaust system directly into the Third Level Warm Canyon through a penetration in the north wall of Room 312. OHBL exhaust air is combined with H-Canyon exhaust air before being filtered by the H-Canyon 294-H and 294-1H Sand Filters and is released through the 291-H Stack. HB-Line has jurisdictional responsibility for operation and maintenance of the Third and Fourth Level process and ventilation equipment. H-Canyon has jurisdictional responsibility for operation and maintenance of required utilities.

2.15.2 URANIUM SOLIDIFICATION FACILITY

The unfinished Uranium Solidification Facility (USF) facility is located in Sections 1–3 of the H-Canyon Building Center Section. Facility construction was nearly complete when the project was officially suspended on February 25, 1994. The USF was designed to convert dilute aqueous solutions of uranyl nitrate enriched in U–235 to an oxide form. This oxide would then be packaged and shipped to the Oak Ridge Y–12 facility for conversion to uranium metal and eventual return to SRS for reuse.

Since it was never started or “hot tested,” the USF remains a clean facility, with no radioactive materials present. It is mechanically and electrically isolated from the H–Canyon, with concrete walls providing physical barriers.

2.15.3 TANKS JT–71 AND JT–72

Tanks JT–71 and JT–72 are housed in OHBL on the Fourth Level. These tanks are used in Phase II of the HB–Line process. HB–Line Phase II was used to convert some of the Pu–239 solution stored in H-Canyon to an oxide, and is currently being used to process Np–237 solutions. Tanks JT–71 and JT–72 are used to receive Np-237 solution from H-Canyon. Operational control of the OHBL to include storage tanks JT–71 and JT–72 has been turned over to HB–Line. The HB–Line DSA contains the accident analysis and appropriate controls for safe operation of Tanks JT–71 and JT–72.

2.16 H–CANYON VENTILATION SYSTEMS

Six individual ventilation systems are employed in H–Canyon to protect workers from airborne radioactivity. In general, air flows from zones of lower contamination to higher contamination. The static pressure in any zone is higher than in adjacent zones of higher contamination and less than in adjacent zones of lesser contamination. Fans that maintain the required airflows and differential pressures are located in the 292–H Fan House and discharge directly to the 291–H Exhaust Stack. Figure 3 in Chapter 10 of this SAR is a diagram of all the ventilation system except for the Dissolver Offgas System. A summary of each of the six ventilation systems is in the following sections:

2.16.1 CENTRAL AIR SYSTEM

Conditioned air is continuously supplied to the clean and the radiological boundary areas in the building that have no or very little airborne contamination. Air flows from the clean First and Fourth Levels into work areas with progressively greater potential for contamination. One air stream flows from the First Level to the Second Level then to the Third Level while another stream flows from the Fourth Level to the Third Level. The air streams on the Third Level discharge into the Sample Aisles. The Hot Gang Valve Corridor (HGVC) and Warm Gang Valve Corridor (WGVC) are supplied with air in Section 18, which then flows south to Section 3. Air from the GVCs is combined with air from the Sample Aisles and exhausted at the south end of the building to the Center Section Tunnel. The Center Section Tunnel leads to Building 292–H where exhaust fans pull the air through HEPA filters in 292–H Building and discharge it to the 291–H Stack. This system has essentially no contact with fissile or other radioactive material until it is combined with other ventilation exhausts just prior to entry into the stack.

2.16.2 CANYON AIR SYSTEM

Filtered outside air is supplied to the canyon by fans. Air enters the canyons through registers along the crane ways and exits the canyon through registers near the bottom of each canyon cell. The downward airflow keeps contamination inside the canyon cells. Exhaust fans in Building 292–H pull the air through the sand filters, Building 294–H and 294–1H, and discharge it to the stack. The sand filters are constructed of layers of progressively smaller aggregate, starting with coarse stone on the bottom and ending with fine sand on the top. Airflow is out the top. The two sand filters operate in parallel removing about 99.98% of the particulate radioactivity from the

air, equivalent to a HEPA filter. The accident analysis in this SAR (Addendum 1) assumes that the sand filters are 99.51% efficient (0.49% filter penetration factor) in removing any radioactive particulates that are airborne in the canyon exhaust air stream.

2.16.3 PROCESS VESSEL VENT SYSTEM

A constant air flow is maintained through process vessels and associated equipment in the Hot and Warm Canyons to maintain them at a slightly negative pressure relative to their surroundings. In this manner, airborne radioactivity is swept from the process equipment into the PVV system. The PVV system also removes hydrogen generated by radiolysis of water by the radioactive materials in the canyon vessels. The PVV system is shown on Figure 4 in Chapter 10.

The Hot Canyon PVV gases are filtered through a Fiberglass filter, 7.2F, and routed from the Hot Canyon to the Warm Canyon. Here the gases are combined with the Warm Canyon PVV off–gas system and enter one of two PVV exhaust fans in Section 5 of the Warm Canyon. The Warm Canyon PVV air passes through a Fiberglass filter, 5.7F, and combines with the Hot Canyon PVV air. The Warm Canyon PVV system originally had a heater (5.6) in the system to lower the relative humidity of the air before it entered Fiberglass filter, 5.7F. This heater (5.6) was out of service for an extended period, and has now been physically removed from the facility per the instructions in Design Change Form Package M–DCF–H–05503. The PVV fans discharge the PVV exhaust into the Warm Canyon Exhaust Tunnel, where it joins the canyon air and flows through the sand filter before being monitored and exhausted through the 291–H Stack. The PVV filter inlet low vacuum alarms were modified to include a new PLC, and evaluated in USQ–HCAN–2002–00748 (Ref. 14).

2.16.4 RECYCLE VESSEL VENT SYSTEM

The Recycle Vessel Vent (RVV) System services vessels in 211–H, Building 222–H (Cold Feed Building), the Third Level of the H-Canyon Building, the uranium storage tanks in A–Line and the drain tanks in old Cold Feed Area. The RVV system is assumed to remain operable following a design basis earthquake. A schematic drawing of the RVV system is shown in Figures 5 and 6 of Chapter 10.

The RVV header for the Third Level tanks in H-Canyon exits the building through the Center Section exhaust air tunnel. The vent header from Outside Facilities joins the H-Canyon Building header in the air tunnel that carries the off gases to one of two exhaust fans in 292–H. A modification has been completed that bypasses the RVV filters to resolve a nuclear criticality concern about the potential accumulation of fissile material on the RVV filter. This RVV exhaust air then combines with the OHBL exhaust and flows through the sand filter before being exhausted to the stack.

Based on the H–Canyon DCA (Ref. 7) and an engineering evaluation (Ref. 8), there is no concern with fissile material buildup on the sand filter with the RVV filter bypassed. However, there is a concern that moisture can potentially accumulate in the bypassed RVV filter. The Bypassed RVV filter has been sealed to prevent any significant accumulation of water (such as

from rain) but there is a potential for water vapor in the air to enter the filter and condense into a liquid from ambient air temperature changes that heat or cool the RVV filter. Any significant moisture accumulation could cause any fissile material remaining on the filter to be absorbed and collect in the bottom of the filter. A rapid build up of liquid from condensed water vapor is not a concern. Rather, it is a concern about liquid accumulation over an extended period. The commitment to analyze the bypassed RVV filters was accomplished within one year of Phase III start up. This effort closed out the commitment (the criteria were developed in a 1997 memo [NMS–EHA–970464]), and it was deleted from Table ES–1. Based on the small accumulation of uranium in the RVV Filters, SRNL has stated that water present in the filter that comes into contact with dried uranyl nitrate would not be an issue. The dried uranyl nitrate would readily dissolve and still be safe because the potential amount is a fraction of the single mass CSL (Ref. 9). Final disposition of the filters will be decided upon facility decommissioning.

2.16.5 DISSOLVER OFF–GAS SYSTEM

The dissolver off gases for each dissolver pass through an iodine reactor and then pass through a fiberglass filter before exiting from the 291–H stack. The iodine reactors are operated to maintain the offgas system within its designed operating limits, but are not operated for iodine removal when processing unirradiated HEU. Figure 7 in Chapter 10 shows a schematic of this system. This system removes the off gases evolved during the dissolution process.

2.16.6 OLD HB–LINE VENTILATION SYSTEM

The OHBL Ventilation System in the Third and Fourth Levels is designed to prevent the spread of airborne contamination to clean areas. This containment is accomplished by maintaining a slightly negative pressure in areas of low contamination potential with respect to a higher negative pressure in areas with high contamination potential. The entire Third and Fourth Level area is maintained at a slight negative pressure with respect to the H-Canyon. Third and Fourth Level ventilation is operated and maintained by HB Line personnel.

Supply air to the Third and Fourth Levels is provided from the H-Canyon Center Section. Exhaust air from the Third and Fourth Levels flows from rooms into process cabinets and is exhausted in stainless steel ducts to the room exhaust system. Under Project CL03002, the Third and Fourth Level Ventilation room exhaust system configuration has been modified. The original 36-inch exhaust pipe duct located in the concrete duct inside the west wall of H-Canyon has been isolated from the exhaust system and abandoned in place. The isolation points are at the existing exhaust penetration route at the Third and Fourth Level to the H-Canyon exhaust tunnel and at the HEPA filter housing in Building 292-H. The existing exhaust fans, HEPA filter housings, and ductwork in Building 292-H have also been abandoned in place. The ductwork downstream of the HEPA filter housing in Building 292-H will still be under vacuum and used as the flow path to the Canyon Exhaust for the HEPA Filter Room exhaust and for the RVV System exhaust. The OHBL Exhaust duct is assumed to be totally breached as it enters 292-H following a design basis earthquake.

Under the new configuration, two exhaust fans, two HEPA filter banks, and the associated ductwork is installed in Room 307. The door in the existing wall between Rooms 307 and 312

was modified to accept the exhaust duct from the two new fans. The exhaust duct was routed from the exhaust fans to the door and seal welded. Room 312 was modified to be an exhaust distribution plenum that discharges to the Third Level Warm Canyon through a penetration cut in the north wall of the room. Exhaust entering the Warm Canyon is then exhausted via the normal Canyon Exhaust flow path.

The penetration cut in the Room 312 wall compromised the fire barrier between OHBL and the Warm Canyon that prevented the propagation of fires between the two facilities. Project CL03002 ensured the fire barrier was re-established by seal welding the common end of the fan discharge duct to the existing door frame between Rooms 307 and 312, installing a 2-hour fire rated wall over the east wall of Room 312 at an abandoned (plated over) door to the Section 3 stairwell, and installing 2-hour fire rated wrap on the required length of exhaust ductwork in Room 307. In addition the penetration in the ceiling between Rooms 307 and 410 was sealed with an Underwriters Laboratory approved penetration seal and the OHBL fire suppression system was extended into Room 307.

The implementation of Project CL03002 has significantly improved the reliability of the OHBL ventilation exhaust system replacing the older fans in 292-H with new, more reliable units, and allowing the deteriorated duct located inside the Canyon exhaust tunnel to be abandoned. One fan will normally be running as the primary exhaust fan with the other fan in a standby mode. In the event of a loss of the primary fan, either electrically or mechanically, a low vacuum pressure switch referencing the filter inlet plenum will sense a loss of vacuum and automatically start the backup exhaust fan. The PLCs logic delays the start of the stand-by fan, in the event of a power interruption so that the fan in "run" will have time to come on line and restore vacuum. Both fans have emergency power available through the H-Canyon Emergency Diesel Generator (DG). Fan failure alarm is provided in the H-Canyon control room. Remote control panels (one per exhaust fan) are located in the OHBL 305 corridor. Each panel provides control capability and status indication of its respective exhaust fan. The location of the control panels allows observation of the exhaust fans through a window in the Room 307 door. To prevent a possible backflow from the Warm Canyon into OHBL, there is an interlock to trip the Canyon Supply Fans in the event of a failure (low vacuum) of both the new exhaust fans. This interlock activates a visual/audible alarm in the H-Canyon Control Room.

2.17 FIRE PROTECTION SYSTEM

An automatic fire suppression system upgrade completed in 1999 (Project S–4610) brought the H–Canyon fire protection features and programs up to the level required by DOE Order 420.1 (Ref. 10) and DOE Order 440.1 (Ref. 11) and the Standards/Requirements Identification Document (Ref. 12). The modifications include upgrading the existing 1st Level wet–pipe sprinkler system to meet the requirements of National Fire Protection Association (NFPA) 13. Additionally new wet–pipe sprinkler systems were installed on the 2nd, 3rd, and 4th Levels of the facility.

H–Canyon components, which could affect the ability to flow water to the HB–Line Fire Suppression System, are instrumented and provide a common alarm to the H–Canyon Control Room. Any impairment to the H–Canyon Fire Suppression System that would also impair the

capability of the Third/Fourth Level Fire Suppression System to perform its intended function is sufficient cause to declare the Third/Fourth Level Fire Suppression System inoperable. This Third/Fourth Level Fire Suppression System contains the following active components: sprinklers, header pressure indicating gauge with associated isolation valve, and the main drain valve. Curbs and dams are provided at entrances to high contamination areas to prevent the potential spread of contamination resulting from a sprinkler discharge. The Third/Fourth Level Fire Suppression System was designed and installed in accordance with NFPA 13 and tested in accordance with NFPA 25 requirements. This system is maintained and inspected in accordance with NFPA 25 requirements. Firewater is supplied to the Third/Fourth Level Fire Suppression System from the H-Canyon Fire Suppression System. The main header supplying firewater to the Third/Fourth Level Fire Suppression System taps off an H-Canyon Fire Suppression System standpipe located in the H-Canyon Section 1 stairwell. The system boundary between the H-Canyon and the Third/Fourth Level Fire Suppression Systems is at the downstream side of the isolation valve on this main supply header. The firewater supply to the Third/Fourth Level Fire Suppression System, including any part of the H–Canyon Fire Suppression System outside the jurisdictional control of H–Canyon is functionally classified as Production Support.

2.18 NEARBY FACILITIES

There are facilities adjacent to H–Canyon and OF–H that either support or are supported by H–Canyon systems or operations. Alternately, operations in these adjacent facilities can impact H–Canyon and OF–H operations, emergency events, or the accident analyses. This section describes the major facilities and their potential impact on H–Canyon and OF–H.

2.18.1 BUILDING 299–H

Building 299–H Exhaust System feeds into the H–Canyon Exhaust System Sand Filters through a 42 inch duct that flows directly into the 294–1H Sand Filter. Part of this duct is exposed (i.e., above ground level) and as such could cause an unfiltered ground–level release of radionuclides or hazardous chemicals. This exhaust duct is not pressurized by any ventilation fans in 299–H. Airflow (i.e., motive force) is from the H–Canyon Exhaust System Fans in 292–H. Since these fans are downstream of the exposed duct, any breach would not allow the exhaust to escape. The vacuum created by the fans will pull air into the duct to be subsequently filtered and released.

Under post-seismic event conditions, the 42-inch duct from Building 299-H to its entry into the 291-H sand filter (downstream of the canyon) is assumed to have failed during the seismic event providing a pathway for a ground level release of radionuclides or hazardous chemicals. Also, the H-Canyon Exhaust Fans in 292-H are inoperable for a period of 48 hours. Without the fans operating, a ground level release is assumed to occur at the breach.

The existing HLW DSA covers 299–H and addresses an unfiltered, ground–level release from the building. This particular accident scenario was screened from further evaluation due to low consequences. There is no SC or SS equipment identified in 299–H for the exhaust system.

2.18.2 BUILDING 253–H

Building 253–H supports repair, maintenance, and calibration of radiation measurement equipment. The classification for this building is "Other Industrial." This is due to the small amounts of fixed and/or transferable contamination identified in the referenced Health Physics Technology documentation (Ref. 13). Since the facilities (253–H and 299–H) are already bounded by existing accident analyses, these facilities will not be discussed further in this SAR.

2.19 REFERENCES

1. Savannah River Site DSA Support Document – Site Characteristics and Program Descriptions. WSRC-IM-2004-00008, (Latest Revision), Westinghouse Savannah River Company, Aiken, SC.
2. Technical Manual 200–Area HM Process. DPSTM–200–HM, E. I. du Pont de Nemours and Company, Savannah River Laboratory, Aiken, SC, July 1977.
3. Clinton, B.A. The H–Modified Process. NMP–STH–910048, Westinghouse Savannah River Company, Savannah River Site Aiken, SC, April 1991.
4. Safety Analysis—200 Area Savannah River Plant H–Canyon Operations. DPSTSA–200–10, Supp 5, E. I. du Pont de Nemours and Company, Savannah River Plant, Aiken, SC, February 1986.
5. Safety Analysis—200 Area Savannah River Site Separations Area Operations Building 211–H Outside Facilities. DPSTSA–200–10, Sup 11, Rev. 1, Westinghouse Savannah River Company, Savannah River Site, Aiken, SC, January 1993.
6. Systems Analysis — 200 Area Savannah River Plant H–Canyon Operations. DPSTSY–200–1H, Volumes 1 and 2, E. I. du Pont de Nemours and Company, Savannah River Plant, Aiken, SC, October 1983.
7. H–Canyon Double Contingency Analysis. N–NCS–H–00037, (Latest Revision), Westinghouse Savannah River Company, Aiken, SC.
8. Lewczyk, M.J. Engineering Evaluation of Uranium Accumulation in Sand Filter After RVV Filter Bypass (U). NMS–EHA–97–0596, Westinghouse Savannah River Company, Aiken, SC, December 18, 1997.
9. Thomason, R.C. and Jeffcoat, R.D. H–Canyon RVV Tank Assays. N–CLS–H–00308, Westinghouse Savannah River Company, Aiken, SC, February 1998.
10. Facility Safety. DOE Order 420.1, Change 3, US Department of Energy, Washington, DC, November 2000.
11. Worker Protection Management for DOE Federal and Contractor Employees. DOE Order 440.1A, US Department of Energy, Washington, DC, March 1998.
12. Standards/Requirement Identification Document (S/RID). WSRC–RP–94–1268, Westinghouse Savannah River Company, Aiken, SC.

13. Source Term and DAC Level Approximations for the 253–H, Hot Shop Conversion (U). ESH–HPT–2000–00155, Westinghouse Savannah River Company, Aiken, SC, October 2000.

14. Modifications to the Low Activity Waste, High Activity Waste, Rerun, and Process Vessel Vent System Process Controls (U). USQ–HCAN–2002–00748, Westinghouse Savannah River Company, Aiken, SC, August 2002.

15. Consolidated Hazards Analysis for the Repackaging of Waste Stored in Large Steel Boxes for H-Canyon. WSRC-TR-2004-00609, Washington Savannah River Company, Aiken, SC, June 2005.

3.0 RELEVANT OPERATIONAL HISTORY

3.1 SIGNIFICANT EVENTS

Abnormal operating events for the H–Canyon and associated facilities have been documented and analyzed in the respective SARs and this SAR. Significant events addressed in the SARs include an uncontrolled reaction in the OF–H GP Evaporator; a ruthenium volatilization event in the H–Canyon Dissolving and Head End operations; and a buildup of AN in the PVV filters.

Significant abnormal operating events that have occurred since approval of the original SARs in 1987 include a water hammer in a major steam line in the canyon building; precipitation and accumulation of small amounts of plutonium solids in two solution storage tanks; personnel contamination in OHBL from a loss of breathing air; personnel radiation exposure in the Railroad Air Lock from an inadvertent opening of the Shielding Door; and a contaminated material release from a solid waste burial box in transit to the Burial Grounds. None of these events were of an unanalyzed type or exceeded the calculated consequences for these type events. Corrective actions for these events are described in Section 3.2.

Identification of analytical deficiencies in the SAR accident analyses, causing an underestimation of the accident consequences, was addressed in Addenda 4 and 6, to the 1986 H–Canyon SAR and in this SAR. These deficiencies are addressed in section 4.1.1 “Safety Analysis Report Addenda.” The appropriate safety report analyses addenda are included as addenda to this SAR.

In July 1998, it was discovered that the doses (consequences) calculated for the H–Canyon accident scenarios were calculated using the MELCOR Accident Computer Code System (MACCS) Consequence Code using plutonium oxide as the material assimilated by the receptor. For most H–Canyon accidents, the correct form of the material released in an accident and assimilated by the receptors is the plutonium nitrate form of the material. The dose from the plutonium nitrate form of the material is about 50% greater than the dose from the plutonium oxide form. The increase in the dose from the nitrate form is from the effects of the nitrate form on the human body. The nitrate form dissolves more rapidly, reaches the target organs quicker, and remains in the human body longer than the oxide form does. This increased residence time in the target organs causes the increased dose from the plutonium nitrate form. The error in the consequence calculations was reported as a Potential Inadequacy in the Safety Analysis (PISA) per the appropriate WSRC procedures. An evaluation of the increase in the accident consequences was completed in an USQE, USQ–HCAN–98–0388. This USQE determined that a USQ did not exist and that the increased doses from the plutonium nitrate form were within the doses (consequences) previously reported to and approved by DOE in the addenda to this SAR. The SAR accident consequences were revised to reflect using the plutonium nitrate form in the MACCS Consequence Code. The revised doses are in the accident analysis addenda to this SAR.

Two other significant events related to nuclear criticality prevention in the First Cycle mixer–settler banks have been identified. The first scenario is that a low TBP concentration in the First Cycle solvent feed stream could potentially be the initiating event for an unanalyzed criticality in the First Cycle mixer–settlers. A low TBP concentration has the potential to cause a reflux in the

mixer–settler that could cause the mass limit or the concentration limits in the mixer–settlers to be exceeded. During the evaluation of the low TBP concentration issue, it was discovered that, because of the location of the neutron monitors on the mixer–settler banks, the neutron monitors may not be able to detect a reflux (increased uranium concentration) in all stages of the mixer–settler. Both of these scenarios were evaluated and additional controls were added to ensure a criticality does not occur in the mixer–settler banks. The initiating event scenario and the appropriate controls have been added to the H–Canyon DCA.

Another Discovery USQ was determined to exist as a result of an evaluation of the receipt of waste streams from HB–Line. HB–Line dissolved Sand, Slag, and Crucible material from FB–Line to recover the usable Pu–239 in the Sand, Slag, and Crucible. The final Pu–239 product stream was transferred from HB–Line to H–Canyon for storage for further processing. A part of the HB–Line process is that periodic and as required flushes of the HB–Line process equipment must be conducted. The flush material, which is a waste stream for HB–Line, is transferred to H–Canyon for disposal as waste. Some of the waste streams received from HB–Line are primarily water while others are acidic. When water is mixed in a vessel that contains plutonium, a plutonium hydroxide polymer can form. This polymer can precipitate out. The plutonium polymer and any precipitate formed from it are a criticality concern. During a review of the HB–Line DCA, a concern was raised that the waste streams that were basically water were being transferred to H–Canyon Tank 8.8 which could contain plutonium (Pu–239). A review was completed of the H–Canyon DCA and other DSA documents to determine if adequate and appropriate controls to prevent plutonium polymer formation in Tank 8.8 were in the H–Canyon DSA. It was determined that appropriate controls were not in the DOE approved DSA documents. A discovery USQ was determined to exist, adequate controls to prevent the criticality scenario were added to the H–Canyon DCA, and the revised DCA was approved by WSRC and DOE–SR.

The plutonium polymer scenario, originally identified for Tank 8.8, was expanded to include all areas in H–Canyon where plutonium was handled or stored (e.g., LAW and the Pu–239 storage and receipt tanks). SRNL evaluated the ability to form plutonium polymer in the canyon tanks and processes. The expanded study included the possibility of adding water from any source to the H–Canyon tanks, which are used to receive, store, or process plutonium. The study considered those scenarios in which water is added to the tanks either directly as planned operations (e.g., replace water evaporated from the tanks) or inadvertently (e.g., cooling coil leak). The SRNL report (WSRC–TR–99–00008) also determined the effects of nitric acid concentration, plutonium concentration, and the solution temperature on the ability to form a plutonium polymer and the subsequent ability and time required to redissolve any polymer that formed. The SRNL evaluation resulted in another PISA and Discovery USQ for H–Canyon. The issue that resulted in the Discovery USQ was the potential to form a plutonium polymer in the sumps and sump receipt tanks. The H–Canyon DCA did not specifically identify a criticality initiating event from plutonium polymer formation and precipitation in the sumps and the sump receipt tank. The DCA identified and contained controls for criticality prevention related to plutonium polymer precipitation in the plutonium storage tanks. However, the identified defenses for this scenario were not as specific as they should have been. Therefore, the plutonium storage tanks were added to the Plutonium Polymer Discovery USQ. A DCA revision that contained the appropriate controls was developed and implemented. Where appropriate the

controls are included in the latest revision of this SAR and TSR. WSRC–TR–99–00210 evaluated the adsorption of the plutonium polymer on the stainless steel tank walls.

An immediate facility response to the precipitation of plutonium bearing solids was to complete a Nuclear Criticality Safety Evaluation (NCSE) to ensure that the boric acid in the tanks was an adequate neutron poison. The boron had been added to the plutonium storage solution tanks in the early–1990s. The criticality safety evaluation determined that the boron concentration was sufficient to prevent a criticality from plutonium solids formation in the tank. Additionally, a Test Authorization (TA) was prepared to implement the requirements of the Concentration Nuclear Criticality Safety TS while solids are present in Tanks 12.1 and 18.3. The TA requirements have been included in the DCA and the TA has been removed from the H–Canyon DSA List.

During the replacement of the 17.2 Evaporator (17.2E), cooling water was released to the cell floor, as expected, when the cooling water jumpers were removed. A steam jet eductor was used to transfer the liquid from the 17 Hot (17H) Sump to the Sump Receipt Tank 18.2. The transferred solution was sampled per normal sump flush procedure guidelines prior to further processing. The sample results indicated the uranium content (i.e., U–235) exceeded the CSLs listed in the TSR. A PISA was identified for the DCA defenses regarding fissile mass buildup on the canyon floors. This new information was identified during the evaluation of the relevant criticality defenses that were initiated following the H–Canyon CSL violation in 17H. The second defense, an annual visual inspection of the cell floor for fissile mass buildup, was not adequate to independently prevent exceeding the CSL. An operational control limit, which is less than the CSL, is the basis for initiating the required flush frequency. In many cases, the time to reach the calculated fissile mass accumulation and the cell flush frequency is less than a year, as compared to the annual cell inspection. If a cell is flushed frequently (e.g., monthly), the annual cell inspection did not independently ensure that the CSL is not exceeded as a fissile mass greater than the CSL can accumulate in one year. A new defense was developed that required the cell inspection to occur at the same frequency as the cell flush. Further reviews, including a 6–sigma analysis, have identified more robust controls (e.g., leak checks on piping changes or rack pan inspections). New Information was reported concerning the potential for a wildland fire impacting the Separations Facilities. An uncontrolled wildland fire is a credible event. Although the Separations Facilities are located several hundred yards from large forested areas, a wildland fire could start smaller secondary fires or impact the operation of H–Canyon and OF–H. Wildland fires are not specifically identified in any H–Canyon document. A wildland fire is evaluated in this SAR in Section 8.3.2.3.4.

Previously the DCA was considered a SB document. It is now a DSA implementing document because the CSLs previously included in the DCA are in the TSR. Exceeding a process parameter limit, that supports a CSL, will not be considered a TSR violation. A TSR violation will occur if any CSL is exceeded.

A possible failure of the exhaust stack liner at seismic intensities below the Design Basis Earthquake (DBE) was identified as an USQ leading to suspension of the H-Canyon facility process operations in March 1992. During this period, essential mainline waste processing and sampling for nuclear material accountability continued while the unit operations remained shutdown. The subsequent WSRC analysis of this USQ identified several items that were

corrected prior to submittal of the request for restart in December 1992. These results were documented in Addendum 3 to the 1986 H–Canyon SAR, and concluded that the increase in total facility risk due to stack liner collapse is less than 2%. Compensatory measures put in place as a result of this USQ included emergency procedures for reducing exhaust system use and restoring air flow through the system.

Because of the red oil explosion in TNX in 1953, engineered controls (temperature and/or pressure interlocks) were installed in all Separations facilities evaporators. Administrative controls (Operational Safety Requirements [OSRs] and TSs now converted to the TSRs) and engineered controls were imposed to limit and detect the presence of organic material in the H–Canyon evaporator feed. Note that this "red oil" explosion occurred well above 130° C. An investigation into "red oil" explosions was prompted by the Tomsk 7 incident in April 1993. The results of the Tomsk review are discussed in Section 8.3.

Because of the potential for AN buildup, the Hot and Warm Canyon PVV filters are required to be flushed per the TSRs. The annual calculation to determine if the PVV filters require flushing prevents an AN buildup on the filters. The use of ammonia scrubbers further reduces the buildup of AN on the PVV filters.

A review of the ion exchange column feed quantities during the Pu–238 recovery campaign from 1993 through 1996 indicated a potential to exceed the TS maximum Pu–238 column load from uncertainties in the ion exchange column feed tank liquid level instruments. A system analysis was completed to include instrument accuracy uncertainty, laboratory and sampling result uncertainties and other system uncertainties. This analysis indicted that the uncertainties found exceeded the original error margin used for operational limits required to ensure the Pu–238 loaded on the column remained within the TS limits. The analysis results were used to adjust the operational limits for loading material on the column to account for the greater uncertainty and to ensure the column load was below the TS limits. **The TS limits will be included in the TSRs before any Pu–238 is processed in FWR. (C)**

A water hammer event in the H–Canyon resulted in damage to the second level 150 pounds per square inch, gage (psig) steam header. The water hammer accident was initiated when steam was admitted to a process tank through an idle, yet pressurized steam header. At the time of the event, the idle header contained water (condensed steam) and the only steam trap for that portion of the header had been previously rendered inoperable by an unauthorized valve closure by person(s) unknown. When steam flow was reintroduced through the 10–inch diameter header that contained the condensate, conditions necessary to initiate condensation–induced water hammer were established. The resulting water hammer created dynamic pressure pulses of 1,400 pounds per square inch (psi) internal to the steam header. The water hammer continued for 10 to 15 minutes and was stopped by securing steam flow to the header and opening the header condensate drains. The water hammer laterally displaced mating portions of the steam header approximately 29 inches, significantly deformed an expansion joint, failed valve bonnet and flange gaskets, failed pipe supports and impinged upon and damaged adjacent cooling water piping and an instrument tray.

The water hammer event in the steam header was thoroughly investigated. The steam system was "walked down" to identify the location and status of all steam traps, valves, and branches off

the steam header. Corrective actions initiated to prevent recurrence of the event include more stringent procedural controls on operation of the steam system, changes to the operating procedures to ensure the correct valve alignment and configuration is present, and increased training on the steam system for the facility operators. Additionally, the steam system was placed under configuration control that included locking out portions of the steam system where potential water hammer events could occur.

In July 1988, used jumpers were loaded into a burial box in the Warm Canyon Truckwell. The jumpers contained radioactive liquids. When the truck was moved from the Truckwell, the liquid in the jumpers leaked out of the jumpers and the burial box. The radioactive liquid was spilled on several parking lots and roads in H–Area. There were 11 personal effects (shoe) contaminations. Additionally, seven vehicles, including several privately owned vehicles, were contaminated. To prevent future liquid radioactive material releases from the solid waste burial boxes, the procedures for waste that is to be placed in the boxes, packaging of the material, and requirements for Radiological Control Operations (RCO) checks on the boxes before they leave the confines of H–Canyon have been improved. Other actions taken include completion of the Waste Certification Program for H–Canyon, the use of waste boxes that meet the requirements for shipping containers, and compliance with the E–Area Vault limits on radioactive material for boxes sent to the burial ground.

A JCO was approved by DOE to address a leak from the H–Canyon Exhaust Tunnel into the OHBL Exhaust Duct. This JCO established controls to minimize the risk of an airborne radioactive material release and prevent or mitigate site personnel exposure to ionizing radiation. The consequences (i.e., ground level, unfiltered release from the OHBL Exhaust System in 292–H) associated with this condition increase the exposure risks by 3.5% to the public or onsite personnel. The consequences associated with any analyzed H–Canyon or HB–Line accident remain within the evaluation guidelines after including the potential for a ground level, unfiltered release from the OHBL Exhaust System components in 292–H. It is concluded that complying with this JCO, which allows continued operation of the facilities until a permanent repair is completed, will not significantly increase the risks associated with facility operation. An extension of this JCO was approved by DOE based on later findings and test results documented in Revision 1. Subsequent to revision 1 of the JCO, further tests have been completed to confirm this analysis (Ref. 93 through 97). The more recent tests completed did not indicate that the size of the hole (effective area of leak) into the OHBL Exhaust duct had changed. An additional control has been added that requires a leak rate test at least every six months. The JCO has been rolled into the SAR in Revision 4. The controls established in the JCO used to be part of the DSA but have either been removed or modified since the completion of Project CL03002 (see Section 8.3.3).

On March 12, 2002, an upset occurred in F–Canyon Second Plutonium Cycle, which was caused by a malfunction of the 2A Bank aqueous outlet interface controller during startup. The 2A Bank interface controller malfunction created a condition in which the aqueous stream supplied to the 2A Bank flowed from the 2A Bank with the organic directly to the 2B Bank. The normal flow route is for the aqueous stream to exit the 2A Bank to the 2AW (waste) stream to Decanter 11.7. The increased aqueous flow of a high acid stream to the 2B Bank induced a reflux condition in the bank (i.e. continuous loop of extracting and stripping the fissile material in the bank) such that the majority of the fissile material did not exit the 2B Bank through any exit

stream. The reflux condition resulted in a fissile material accumulation in the bank, which could have resulted in a criticality if the CSL for the bank had been exceeded. The scenario of a blocked aqueous outlet weir, caused by a malfunctioning interface controller, was evaluated for criticality safety implication for the H–Canyon First Cycle and Second Uranium Cycle and it was determined an USQ existed. The evaluation concluded that a blockage of the aqueous outlet weir could exceed the CSL for the 1C Bank. To prevent this type of occurrence, a weir pressure interlock has been installed that will close the steam valve to the 1AF feed preventing the possibility of a reflux condition.

In response to having inadequate controls for dissolution in the Canyon dissolvers, an investigation was undertaken to provide the needed controls required for safe operation of either H–Canyon dissolver. Parameters monitored and controlled during dissolution process include, but are not limited to, level, specific gravity, sparge or purge airflow, temperature, cooling water flow, steam flow, and differential pressure. Existing and new controls were selected/developed to limit the hydrogen concentration to less than the Lower Flammability Limit (LFL). The selected controls took into account the fact that high temperatures reduce the LFL in a hydrogen–air mixture. Additional constraints included maintaining the SAR event frequency of occurrence to 5.3E–05/year. A JCO for the H–Canyon Dissolver Purge Flow Rates (WSRC–RP–2003–00546, Rev. 1) was approved to allow continued operation without significantly increasing the facility risks associated with dissolution. The controls developed in the JCO are now incorporated in this SAR.

Since the Second Product Cycle is not authorized for operation, 30% TBP was removed from the Canyon and all associated vessels. This removal eliminates a significant red oil concern (i.e., TBP explosion) for runaway reactions involving greater than 3,000 pounds of TBP. The Red Oil JCO (WSRC–RP–2003–00350, Rev. 0) was approved to provide the necessary controls to ensure a TBP and nitric acid runaway reaction involving greater than 3,000 pounds of TBP remained a BEU event. Additionally, similar controls to help prevent a runaway reaction with less than 3,000 pounds of TBP were included in the JCO. An in–depth discussion and inclusion of the controls are also included in this SAR.

Discovery of U–232 in the EUS Tank (New Information) was not previously accounted for during normal sample analysis of tank contents or calculating release consequences. This situation was compounded by the fact that the accident analysis did not take into account this isotope considering the large tank volume in any consequence calculations. Additional tank sampling and subsequent evaluation (Engineering calculation S–CLC–H–00954, Increased EUS Tank Dose Potential from U–232 (U)) determined a relatively small amount of U–232 present in the EUS Tank (approximately 6.1E–02 g U–232), which does not significantly contribute to the dose of accidents analyzed in the H–Canyon safety documentation.

Taking into account potential processing of INEEL DNP oxide, which contains approximately 3E–02 g U–232, the increase in total dose fraction is only about one percent (the U–232 dose fraction in calculation S–CLC–H–00954 was 1.7E–02 [about 2 percent]) due to the limited mass of the INEEL material. The combined unmitigated U–232 dosage increase (about 3 percent) is not enough to exceed the public or site worker USQ criteria.

It was discovered that ammonia generated during waste solution neutralization was not adequately addressed as a flammable material (New Information). Normally PVV flow rates in tanks are judged to be adequate to address both hydrogen and ammonia vapor flammability hazards. In the event the PVV system fails, the TSR requires an alternate purge and references a calculation that provides purge flows on a tank-by-tank basis. This calculation specified a purge rate of about 1 CFH for HAW neutralization Tank 8.4. This alternate purge rate may not be adequate to address a combined hydrogen and ammonia vapor flammability hazard without additional controls.

3.2 SIGNIFICANT EQUIPMENT AND OPERATIONS CHANGES/UPGRADES

New Warm and Hot Canyon remotely controlled cranes were installed in the early 1990's. A Process Hazards Review (PHR) (PHR–200–H–592 Rev. 2) on the installation and operation of the new cranes did not show a negative safety impact from the replacement. The Frames IH and IIH equipment have been removed. Decontamination and decommissioning of the OHBL was begun but stopped. Portions of the OHBL have been decontaminated and decommissioned on an intermittent schedule. DCSs have been installed for numerous H-Canyon and OF-H processes. The EUS tank has been added to the Outside Facilities for long term storage of high enriched uranium solutions. The Cold Feed Preparation originally on the canyon First Level has been moved to Building 222–H. Equipment for the USF has been installed in the Old Cold Feed Preparation Area on the First Level of H–Canyon. The USF project was canceled, and although the equipment remains in place, the facility was never started up and the equipment is non–operational.

An equipment upgrade has been made to the fire suppression configuration in the four H–Canyon Electrical Control Rooms. There were four normally closed, manually operated, sprinkler system zones on Level 1 for Electrical Control Rooms 1 through 4 to protect various motor control centers. These manually activated systems have been upgraded to activate automatically.

A major project (S–4404) was undertaken to upgrade and replace the existing two SC and two non–SC H–Canyon Ventilation Fans (including fan dampers) and one SC and two non–SC DGs power systems for the H–Canyon Exhaust Ventilation System. The existing power systems were each capable of supporting only one exhaust fan. This project has installed four SC fans (including Fan Damper Air System) and two SC redundant "power trains." The existing structure (292–H) was renovated and 254–5H was replaced with 254–19H to accommodate the safety upgrades. The primary purpose of the "power train" systems is to supply reliable power to the H–Area Canyon Exhaust Fans (including Fan Damper Air System). The secondary purpose is to supply various other loads for safe operational efficiency. These DGs supply an alternate source of power in case of failure of one or both of the utility power feeders. Each power train can support two fans and supply power to two of the three motor control centers for ancillary equipment (e.g., control panels, battery chargers, and a stack blower).

Additionally, the S–4404 Project upgrades improve the environment by running the DGs less and using utility power more for day–to–day fan operation. The new fan foundations and power trains are designed and installed to withstand Design Basis Events (i.e., Performance Category

3). In case either of the DGs is not available, connection boxes have been provided to connect a temporary DG.

Another major project was the replacement of all five of the plant and instrument air compressors. This project has been completed and the new air compressors are now operational. Both of these projects were evaluated using the USQ process. The USQ evaluation results were that the projects did not result in an USQ.

The HEU Blend Down Project (S–W437) accepted HEU irradiated fuel (Mk–16B and Mk–22) in Phase I, unirradiated HEU fuel (Mk–22) and other miscellaneous materials in Phase II, produce LEU from the HEU, and provide for loading the material into transportation containers for shipping. The HEU is blended with NU using the uranyl nitrate solution blending process to produce LEU. This process involves the following five major activities:

1. Receipt and unloading of NU

2. Producing a HEU solution in H–Canyon and transferring it to the OF–H Tanks

3. Prepare HEU for blending

4. Blending HEU and NU to produce LEU

5. Loading LEU into transportation containers.

To produce sufficient quantities of HEU solution to support the S–W437 Project, H–Canyon and OF–H upgrades were needed to improve throughput. Higher HEU production rates and purity levels were achieved by adding new equipment and by reconfiguring specific H–Canyon and OF–H equipment to reduce process times and operational steps. Operations personnel blend the HEU with the natural uranium received from offsite sources. The blending operations are done in the OF–H A–Line Tanks to blend the HEU down to a maximum 5% U–235 weight fraction. The blended material is stored in the A-Line Tanks until it is loaded into the special shipping containers for transfer to the TVA fuel fabricator. The blending operation was evaluated by the USQ process (USQ–211H–96–0040), and a USQ was determined to exist as a result of an increase in the consequences of a previously analyzed accident. The OF–H SAR Addendum 1 has been revised to reflect the increase in the accident consequences. A revision of the OF–H SAR Addendum 1, Revision 1, is attached to this SAR as Addendum 2.

The original low capacity breathing air compressor has been upgraded and replaced as the result of a loss of breathing air event. The system now has two high capacity air compressors installed with the second compressor in a standby mode. The standby compressor is interlocked to the on–line compressor and will automatically start if the on–line compressor fails or stops running.

One operational event of significance was the receipt and storage of Hanford Containers and HM–Trailers containing DU from FA–Line. Each of the containers contained about 4,000 gallons of a highly concentrated uranyl nitrate solution (approximately 450 g/l U). The containers were filled in FA–Line and transported by truck to the Outside Facilities H–Area (OF–H) for storage. Receipt of the DU significantly increased the OF–H source term. This Proposed Activity was evaluated by the USQ process. It was determined that a USQ existed for

the Proposed Activity. OF–H SAR Addendum 1 was prepared by WSRC and approved by DOE–SR to analyze and document the risks associated with storing the DU in the Hanford Containers and HM–Trailers in OF–H. The DU solution that was stored in the Hanford Containers and HM-Trailers has been returned to FA-Line for disposition. Empty (contain residue DU and flush material) Hanford Containers are now stored on the concrete pad north of the 211-H Segregated Solvent Facility.

Several safety improvements have been incorporated into this SAR:

- Replaced a leaking transfer line from HB–Line
- Abandoning the HB–Line overhead transfer line trough for fissile material transfers and replacing it with jacketed transfer lines
- Added new equipment/controls to eliminate potential criticality common mode failures (e.g., LCO 3.1.18).
- Added new DFs (geometrically favorable LEU Measuring Tank, including insulation jacket drain hole) to protect against inadvertent criticality.

Facility management identified several areas of training for operators, supervisors, managers, and technical support and maintenance personnel to be improved prior to restart of the HM Process. These areas included:

- Safety Documentation
- SB Documents
- Safety–Related Systems
- Radiological Control (Rad Con)
- Hazardous Energy Control
- Emergency Preparedness
- Conduct of Operations

Specific H–Area training program improvements, as part of implementation of S/RID Functional Area 4 (Standards/Requirement Identification Document (S/RID), WSRC–RP–94–1268), include:

- The development and implementation of a “Personnel Selection and Training Requirements” procedure covering H–Area personnel who operate, maintain, or support Separation facilities.
- The development, administration, and evaluation of an Oral Board process to qualify/certify operators, supervisors, Shift Operations Managers (SOMs), and STEs.

- The assignment and training of shift engineers on each shift as a technical resource to provide guidance on operational and safety envelope issues.
- The implementation of the H–Area Operating Experience Program that ensures lessons learned as a result of changes to procedures, H–Area Separations Facilities operating incidents, WSRC operating incidents, industry events, plant modifications, and identified facility concerns are conveyed to H–Area Separations Facilities personnel and incorporated into initial and/or continuing training materials.
- Drill Programs have been implemented to improve the proficiency in responding to various emergency and abnormal facility conditions.
- A program has been developed which provides guidelines for measuring the effectiveness of the HCP facility training programs.

Another significant operational event involving H–Canyon was the proposal to commence processing of laboratory sample returns. Laboratory sample returns from F/H LAB and SRNL previously processed in F–Canyon are transferred to H–Canyon. The sample returns are delivered to the H-Canyon Warm Canyon Truckwell Airlock in trailers. Approximately 15 deliveries per year will originate from F/H LAB using the LR–56 Trailer. This trailer will carry approximately 1,000 gallons per delivery. Sample returns from SRNL are delivered in the HAWTT in batches of approximately 3,000 gallons. SRNL makes approximately seven deliveries a year.

Purified Np–237 solution in H-Canyon is transferred by steam jet to HB–Line for processing into an oxide in HB–Line Phase II. Raffinate solutions containing ferrous sulfamate, hydrazine, and nitric acid are transferred from HB-Line Phase II ion exchange columns to H-Canyon. The raffinate solutions are diluted by adding process water and sodium nitrite to prepare the solution for evaporation. After evaporation, the dilute, acidic overheads are transferred to the ARU in OF-H for additional concentration. The concentrated bottoms are transferred to designated tanks for storage until the entire Np campaign is complete.

H-Canyon is planning to process uranium alloy from the Super Kukla Prompt Burst Reactor operated at the Nevada Test Site. The uranium components (referred to as Super Kukla Metals, which is a National Nuclear Security Administration [NNSA] Metal) are transported to H-Canyon, processed in the dissolvers, and dispositioned following dissolution. Addendum 4 presents the analysis for the receipt, transport, and handling of the Super Kukla Metal and evaluates existing hydrogen and criticality controls for the dissolvers while processing Super Kukla Metals. Since the dissolution and subsequent disposition of the uranium solutions is performed using existing processes and methods, the analysis of these operations in the SAR is still applicable.

H-Canyon plans to receive and dissolve beryllium contaminated plutonium (Pu/Be) with subsequent transfer of the processed solutions to normal waste disposition. The 3013 Material group consists of Pu/Be scrap (referred to as Pu/Be in this SAR and Addendum 5). HB-Line will receive, unpack and repack the Pu/Be in dissolvable cans. Dissolution of the Pu/Be Material will

occur in the H-Canyon dissolvers. Addendum 5 presents the analysis for the receipt and handling of the Pu/Be material by H-Canyon and evaluates existing hydrogen and criticality controls for the dissolvers while processing Pu/Be material. Since the dissolution and subsequent disposition of the Pu/Be solutions is performed using existing processes and methods, the analysis of these operations in the SAR is still applicable.

4.0 SAFETY DOCUMENTATION

4.1 DOCUMENTED SAFETY ANALYSIS DOCUMENTS

DSA documents discussed in this section are listed in Table 4.1 for information only. Current DSA documents are subject to revision, and for an up–to–date listing, refer to the current revision of controlled document WSRC–IM–93–61 (Ref. 1), which contains all the DSA documents for H–Canyon. The latest DOE and WSRC approved documentation is also located on the Savannah River Information Network Environment (i.e., ShRINE). After each DSA document is approved for use with accompanying receipt of the approval memorandum and/or signature page, it is validated and verified from a hard copy print out of the master electronic version retained by WSMS. Then the document is uploaded to SafetyNet on ShRINE. Table 4.1 lists the DSA documents applicable to H–Canyon and H–Canyon Outside Facilities (OF–H). The SARs for the H–Canyon facility and OF–H were written in the late 1980s and early 1990s, according to the 1986 requirements for SARs published in DOE Order 5481.1B (Ref. 2). The SARs include analyses of major hazards and dominant credible accident scenarios for normal processing operations. Event consequences and frequencies were based on nominal source terms, nominal frequencies, and International Commission on Radiological Protection (ICRP) ICRP–2 dose factors.

Addenda to these SARs were prepared to incorporate updated technical data and to incorporate DOE Order 5480.23 (Ref. 3) requirements for SARs. Section 4.1.1 describes the scope of changes made by these addenda. The information contained in Section 4.1.1 is for historical purposes and to show how the SARs were modified to reflect changing conditions or to incorporate the risk of activities that were determined to involve a USQ.

The H–Canyon and OF–H SARs, the OSR, the TS, and the TA, which were part of the previous H–Canyon and OF–H DSA, are good historical reference documents and contain a great deal of valuable information. However, much of the data in these documents has been superseded by more current DSA documents. For example, the information in the OSR and the safety related information in the TS and TA have now been included in the TSRs and DCA for H–Canyon. The original safety analysis in the SAR accident analysis section has been superseded by the information now included as addenda to this SAR. Since the safety analysis information or controls required to protect the safety analysis have been included in the TSR and this SAR, the existing SARs, DCA, TSs, OSR, and TA have been removed from the H–Canyon and OF–H DSA Document list as indicated in Table 4.1. Additionally, since the Nuclear Incident Monitors (NIMs) are now included in the TSRs as an LCO, the NIM Technical Manual has been deleted from the H–Canyon and OF–H DSA List. These documents will be maintained as historical reference and implementing documents as the basis for the controls and safety analysis information in the newer documents.

4.1.1 SAFETY ANALYSIS REPORT ADDENDA

The following information on the various SAR addenda is maintained in this SAR to show the basis for development of the old SAR addenda.

Addendum 1 to the 1986 H–Canyon SAR reevaluated the risks of applicable SAR accidents in FWR operations. The addendum included both nominal source terms (4 g/l plutonium and 24 Ci/lb solution) and maximum source terms (7 g/l plutonium and 42 Ci/lb solution) to determine accident consequences. The SAR addendum used nominal frequencies only. Dose consequences were reported in ICRP–30 values.

Addendum 2 to the 1986 H–Canyon SAR was an USQ that analyzed the risk of processing Pu–242 Mk–42 assemblies in H–Canyon.

Addendum 3 to the 1986 H–Canyon SAR was a USQ addressing the risks regarding possible collapse of the exhaust stack liner in a 0.04g horizontal ground motion earthquake, which is a smaller earthquake than the 0.2g DBE.

Addendum 4 to the 1986 H–Canyon SAR reevaluated the consequences of applicable SAR accidents, using revised nominal source terms and estimated maximum source terms for FWR operations. Updated dose factors, population data, meteorological data were also used, and site worker risks were included. The accidents covered by this addendum were plotted on the WSRC 9Q risk acceptance curves, and these plots demonstrate that operation of FWR falls within the accepted risk values for offsite receptors and site workers. Note that the WSRC Procedure Manual 9Q has now been superseded by the WSRC Procedure Manual 11Q (Ref. 4).

Revision 1 of Addendum 4 to the 1986 H–Canyon SAR reevaluated the risk of FWR accidents resulting from an increased column loading in the anion exchange columns. This increased loading effectively increased the source term for fire and accident consequences for each accident previously analyzed for FWR. Additionally, the SAR Addendum incorporated the analysis of a hydrogen deflagration event, a newly considered type of uncontrolled reaction, for maximum consequences. Also identified and analyzed in this revision was a new release pathway for the circulating water system coil and tube failure event, involving a cooling tower airborne release.

Addendum 5 to the 1986 H–Canyon SAR evaluated facility modifications and new controls developed to ensure that the ion exchange column liquid flow would be restored within 1.5 hours after a DBE. Before these controls were implemented, it was determined an earthquake–induced resin fire was a credible event with unacceptable consequences. The unacceptable consequences resulted in facility and equipment modifications and the development of additional controls to prevent the loss of liquid flow or to restore flow to the column within 1.5 hours.

The Third Level elution head tank and piping were modified to ensure they were seismically qualified. New controls require the flow of elution solution (dilute nitric acid) from Tank 18A on the Third Level be restored to the column. This solution will elute the column, thereby removing the radioactive source term rapidly. SAR Addendum 5 concludes that with the modifications and the additional controls, the frequency of an earthquake–induced resin fire when the column is fully loaded with 800 g Pu–238 is a BEU event (i.e., frequency less than 1.0E–06/year).

H–Canyon SAR Addendum 6 reevaluated the consequences of applicable SAR accidents, using maximum source terms, nominal frequencies and the MACCS code. Additionally, consequences

were evaluated for applicable accidents associated with storage of material removed during decontamination and removal operations in the OHBL. Updated dose factors, population data, meteorological data were also used, and site worker risks were included.

The analysis results for the site worker (located 640 meters from the facility) were plotted to show the risk to the site worker from H–Canyon accidents. (Note that the PHA uses a 600–meter limit for the site worker while the accident analysis work completed for the SAR accident analyses uses a 640–meter distance for the site worker.)

Addendum 6 demonstrates that H–Canyon operation does not pose undue risks to the site worker. Since DOE has not published risk acceptance levels for the site worker similar to those for the offsite public, a DOE risk acceptance level is not shown on the site worker curves. The H–Canyon USQ risk acceptance curves are also compared to offsite receptor risks.

Identification of analytical deficiencies in the accident analyses from the current SARs, causing an underestimation of the accident consequences, was addressed in Addenda 4 and 6 to the H–Canyon SAR and in this SAR. The first of these deficiencies involved use of nominal concentrations for process solutions in accident analyses rather than those permitted by OSR or TS limits. New source terms for the TS limits (maximum) were evaluated in Addendum 6, Rev. 0 to the 1986 H–Canyon SAR, and the results demonstrate that the facility can operate safely to meet WSRC risk acceptance criteria. The second analytical deficiency evaluated in the SAR Addenda involved the use of now outdated dose conversion values (ICRP–2) in accident analyses. The last analytical deficiency addressed in Addendum 6, Rev. 0 to the SAR was the failure to address storage of the plutonium and neptunium solutions.

The SAR Addenda included other changes to the SAR accident analysis. Among them were the identification of new events or expanded analyses of existing events. These items are as follows:

- A hydrogen deflagration event, a newly considered type of uncontrolled reaction (radiolysis of water), was analyzed.
- Another release pathway for the coil and tube failure event, involving an airborne release from the cooling tower, was identified and analyzed. This event results in a risk increase to the facility worker.
- The consequences of transferring the plutonium and neptunium solutions, in addition to merely storing them, were analyzed.
- A different type of inadvertent transfer was analyzed. Inadvertent transfer of the contents of a process vessel to the cooling water return systems was analyzed and was determined to be a BEU event.

Uncontrolled TBP–nitric acid (red oil) reactions were previously analyzed in the SARs. The red oil explosion at the Tomsk–7 nuclear fuel reprocessing plant in Russia in April 1993 prompted additional safety analyses to be completed as part of this SAR. The recent analysis is contained in Section 8.3.

Changes in the SAR Addendum 6 include updated expected (nominal) frequencies for the ruthenium volatilization event and the coil and tube failure liquid release event. These new frequencies resulted from updated data in the 200–Area Data Bank. Additionally updated frequencies for the ion exchange resin fire were included. SAR Addendum 6 is included in this SAR as Addendum 1.

Addendum 1 to the 1993 OF–H SAR evaluated the frequency and consequences associated with receipt and storage of 14 Hanford Containers containing a DU solution from FA–Line. The DU was received in OF–H for storage and possible processing in the OF–H A–Line or EUS tanks. A USQE on the proposed receipt and storage activity determined that a USQ existed from an increase in the consequences of a previously analyzed accident. The SAR addendum was prepared to address the increased accident consequences issue. The addition of the DU as a source term for OF–H did not present a significant health or safety hazard to the offsite public, the onsite worker, or the facility worker. DOE approved the SAR addendum in February 1996.

OF–H SAR Addendum 1, Revision 1, evaluated the frequency and consequences associated with the blending of the HEU and DU stored in OF–H HA–Line tanks and containers. A USQE prepared on the proposed blending and storage activity determined that a USQ existed from an increase in the consequences of a previously analyzed accident. The revision to the SAR addendum was prepared to address the increased accident consequences issue. The additional source term for OF–H did not present a significant health or safety hazard to the offsite public, the onsite worker, or the facility worker. DOE approved the SAR addendum in November 1996. This old SAR addendum is included in this SAR as Addendum 2. This addendum includes the additional source term for the NU being used in the HEU Blend Down Project and for failure of OF–H piping to the EUS Tank.

The results of the accident frequency and consequence calculations for postulated H–Canyon and OF–H accidents were given in the SAR addenda and are now included as the addenda to this SAR. SAR Addendum 1 is the accident analysis for postulated H–Canyon accidents. As noted in Chapter 3, the consequences for the H–Canyon accidents calculated using the MACCS Consequence Code used the plutonium oxide form instead of the more conservative plutonium nitrate form for radioactive material released in the accidents. This error in the application of the MACCS Code only affects the H–Canyon accident consequences involving airborne releases of plutonium bearing materials. Liquid releases for H–Canyon and radioisotopes other than plutonium were not affected. Additionally, the MACCS Code error did not affect the accident consequence calculations for OF–H because the OF–H accident consequences were calculated using the AXAIR89Q Model.

Prior to discovering the MACCS Consequence Code error, WSRC had planned to update the consequence analysis for both H–Canyon and OF–H. WSRC had planned to add consequences for a red oil explosion involving less than 3,000 pounds of TBP, an AN explosion in the PVV filters, and an increased source term for stored Pu–239 to the H–Canyon accident consequences given in SAR Addendum 1. WSRC had planned to add the consequences for a criticality accident in OF–H to SAR Addendum 2. The consequences in the addenda have been revised to include the accidents noted plus the consequences given in Addendum 1 that were affected by the MACCS Consequence Code error were also revised.

A revision to Addendum 1 added the three accidents noted above and corrected the MACCS consequences for the plutonium release. Additionally, all the accidents were revised to meet the current WSRC accident analysis guidelines of using 95% instead of 99.5% meteorology in determining the dose to the offsite receptor. The change in going from a 99.5% to a 95% meteorology results in a dose reduction to the offsite receptor of an order of magnitude in most cases. The source term used in the accident consequence calculations was reduced from 150 day cooled SRS reactor fuel to 3,000 day (3,650 day for hydrogen generation) cooled SRS reactor fuel. This change in the cooling time of the fuel significantly reduced the source term due to short half–life fission products. This source term reduction is valid because there are no SRS reactor fuels cooled for less than 2,500 days available for processing in H–Canyon. The accident calculations used a maximum source term in which the entire contents of the largest process tank at the maximum concentrations allowed was released.

For the OF–H consequences, the consequences were recalculated using the MACCS code instead of the AXAIR89Q code. A criticality in the OF–H A–Line tank sumps was included in the consequence calculations. A maximum source term was used in the accident calculations in which the entire contents of the largest tank in a process at the maximum concentrations allowed was released.

In both addenda the co–located (onsite worker) distance was reduced from 640 meters to 100 meters to determine the site worker consequences. The source term used to calculate the 100–meter dose is based on a best estimate source term. The best estimate source term is applicable to the source terms used in the consequence calculations for both H–Canyon (Addendum 1) and OF–H (Addendum 2) for the onsite worker only.

4.1.2 TECHNICAL SAFETY REQUIREMENTS

TSRs define the authorized operational envelope for nonreactor nuclear facilities at SRS and formally document the requirements for operation in the following categories: Safety Limits (SLs) and Limiting Control Settings (LCSs), LCOs, Surveillance Requirements (SRs), DFs, and ACs. The TSRs were written in 1997 to DOE Order 5480.22 requirements. The TSRs have been revised and the TSR revisions approved by DOE–SR. Generally, the TSR revisions are approved concurrently with a SAR revision.

TSRs define the actual process limits within which the facilities are operated. TSRs specify the requirements and the bases for basic variables within which the process must be operated for reasons of safety, quality, and/or limitations of known technology. Process limits are established by incorporating uncertainties into these limits. Operating manuals and procedures are written to ensure process limits are maintained with a significant margin of safety. CSLs are also treated as TSR limits with process limits that have incorporated uncertainties and margins of safety to ensure that the process is operated safely.

4.1.3 DOUBLE CONTINGENCY ANALYSIS

A DCA was completed for all H–Canyon and OF–H processes in which fissile material is present. The DCA identified two separate independent controls that will prevent an inadvertent

criticality event in H–Canyon and OF–H. The DCA identified the specific criticality initiating event of concern and the controls necessary to prevent the initiating event. The DCA demonstrates compliance with DOE Order 5480.24 and DOE Order 420.1 requirements (Ref. 5 and 6). The DCA shows that protection against an inadvertent criticality is maintained either by controlling two independent process variables or by a system of at least two controls on a single parameter. The DCA was approved by WSRC in December 1996. The DCA through Revision 3 was approved by DOE–SR as a part of the H–Canyon DSA documents. However, since the TSR now contains the CSLs, the DCA has been removed as a DOE–approved DSA document. The DCA will be an implementing document approved by WSRC.

4.1.4 JUSTIFICATION FOR CONTINUED OPERATION

A JCO generally is prepared to allow operations to continue with some type of abnormal condition that is not specifically noted in the other DSA documents. A JCO is prepared for only one condition and describes the condition, any compensatory measures necessary to ensure the facility or process will remain within the current DSA, and the risks associated with facility operation under the JCO conditions. A JCO generally has a specific time limit that expires upon returning the facility to the normal conditions noted in the other DSA documents or upon completion of a revision to the SAR or the TSR. A JCO, with its compensatory measures, ensures that facility operations can continue with the same or a slight increase in the facility risk.

4.2 OTHER DOCUMENTS

4.2.1 FIRE HAZARDS ANALYSIS

The Fire Hazards Analysis (FHA) for H–Canyon, G–FHA–H–00005 (Ref. 7) evaluates the fire protection and life safety features of the H-Canyon Building and demonstrates whether or not the objectives of DOE Order 420.1, formerly DOE Order 5480.7A (Ref. 8), have been satisfied.

FHA M–FHA–H–00016 (Ref. 9) was completed for the 292–H Fan House. This FHA evaluates the fire protection and life safety features of the 292–H Building. FHA, M–FHA–H–00012 (Ref. 10) was completed for 211–H Outside Facilities. This FHA evaluates the fire protection and life safety features of the 211–H Outside Facilities.

The HEU Blend Down Project completed a Project FHA F–PFHA–H–00001 (Ref. 11) to ensure the appropriate fire protection features were provided for the H–Area segment. No outstanding deficiencies or exemptions were identified for the associated facilities.

4.2.2 LINKING DOCUMENT DATABASE

A LDD is a road map of the relationships between DSA document requirements and field implementation of those requirements. The database contains current information regarding SRs and limits included in the DSA documents (e.g., SAR, DCA, and the TSRs). Duplicate

requirements from these DSA documents can be combined into a single entry with reference to all applicable source documents.

The database links the requirements and limits from these documents to various programs and procedures that ensure the requirements are implemented. Implementing programs and procedures include process procedures, surveillance test program, Installed Process Instrumentation (IPI) program, calibration preventive maintenance procedures, functional test procedures, and operator roundsheets. The LDD is reviewed and updated as required to capture any requirements because of changes in DSA documents.

The LDD developed for H–Canyon contains all the requirements, except programmatic controls, identified in the DCA, TSR and the SAR for H–Canyon and OF–H. Note that the LDD does not and is not required to capture the programmatic controls that are not specifically implemented by the H–Canyon operating or maintenance procedures. The LDD captures only those specific controls that are implemented in the facility procedures. This does not include generic programmatic controls. The database is maintained and updated as information in the DSA documents or the implementing documents change.

4.3 REFERENCES

1. NMPD Authorization Base Lists. WSRC–IM–93–61, (Latest Revision), Westinghouse Savannah River Company, Aiken, SC.

2. Safety Analysis and Review System. DOE Order 5481.1B, U.S. Department of Energy, Washington, DC, May 1987.

3. Nuclear Safety Analysis Reports. DOE Order 5480.23, U.S. Department of Energy, Washington, DC, April 1992.

4. Facility Safety Document Manual (U). WSRC Procedure Manual 11Q, Westinghouse Savannah River Company, Aiken, SC.

5. Nuclear Criticality Safety. DOE Order 5480.24, U.S. Department of Energy, Washington, DC, August 1992.

6. Facility Safety. DOE Order 420.1, Change 3, U.S. Department of Energy, Washington, DC, November 2000.

7. Fire Hazards Analysis for H–Canyon Facility, Building 221–H. G–FHA–H–00005, (Latest Revision), Westinghouse Savannah River Company, Aiken, SC.

8. Fire Protection. DOE Order 5480.7A, U.S. Department of Energy, Washington, DC, February 1993.

9. Fire Hazards Analysis (FHA) for Outside Facilities H–Area. M–FHA–H–00016, (Latest Revision), Westinghouse Savannah River Company, Aiken, SC.

10. Fire Hazards Analysis for 211–H Outside Facilities: Facilities 211–8H, 211–1H, and 222–H (U). M–FHA–H–00012, (Latest Revision), Westinghouse Savannah River Company, Aiken, SC.

11. Project Fire Hazards Analysis for the H–Area Segments of Project S–W437, Highly Enriched Uranium Blend Down (U). F–PFHA–H–00001, (Latest Revision), Westinghouse Savannah River Company, Aiken, SC.

Table 4.1 Applicable Documented Safety Analysis Documents

Document No.	Title	Approval Date	Approval Authority
WSRC–SA–2001–00008, Rev. 11	H–Canyon SAR (U)	May 2007 March 2007	DOE–SR WSRC
WSRC–SA–2001–00008, Rev. 12	H–Canyon SAR (U)	June 2007	DOE–SR WSRC
WSRC–TS–96–19, Rev. 15	TSRs SRS H–Canyon and Outside Facilities TSR (U)	May 2007 March 2007	DOE–SR WSRC
WSRC–TS–96–19, Rev. 16	TSRs SRS H–Canyon and Outside Facilities TSR (U)	June 2007	DOE–SR WSRC
WSRC–RP–2004–00283, Rev. 2	JCO, Processing Plutonium Contaminated Scrap In H-Canyon (U)	March 2006 March 2006	DOE–SR WSRC
WSRC–RP–2005–01843, Rev. 1	JCO, Processing 1CU Solution Through H-Canyon Decanter 14.2	May 2007 March 2007	DOE–SR WSRC
WSRC-TR-2006-00655, Rev. 1	JCO, Neptunium Separations	March 2007 March 2007	DOE-SR WSRC

5.0 COMPLIANCE STATUS

5.1 STATUS

WSRC proposed to DOE–SR by letter in December 2000 (Ref. 1), to comply with 10 CFR 830, "Nuclear Safety Management," Subpart B (Ref. 2), for existing facilities by designating H–Canyon's upgraded Basis for Interim Operation (BIO), a graded approach SAR. Demonstration of how this SAR meets DOE–STD–3009–94 (Ref. 3) is by "roadmap" table below. The conversion of the BIO to a SAR and its implementation meets a commitment of the SB upgrade project to comply with requirements of 10 CFR 830 Table 2, DOE–STD–3009–94, and a WSRC S/RID change package for Functional Area 18, "Nuclear and Process Safety" for requirements as they apply to H–Canyon (Ref. 4). After DOE approved the graded approach SAR, H–Canyon became compliant with the intent of DOE Order 5480.23 as described in Reference 3. Maintenance of the SAR will be completed by a yearly update as scheduled in the WSRC Integrated Safety Document Schedule. DOE approval of the revised SAR shows compliance with the requirement to complete an annual update. The approved S/RIDs reflect the direction provided by DOE–SR (Ref. 5) and require only a BIO or SAR and TSR for H–Canyon Operation.

DOE–SR has directed (Ref. 5) WSRC to develop and maintain a TSR document to satisfy the intent of DOE Order 5480.22 (Ref. 6). The H–Canyon TSRs were prepared and submitted to DOE for approval. Upon DOE approval of the TSRs, H–Canyon became compliant with the intent of DOE Order 5480.22. Maintenance of the TSRs will be completed by a yearly update as scheduled in the WSRC Integrated Safety Document Schedule. DOE approval of the revised TSRs shows compliance with the requirement to complete an annual update of the TSR.

Site wide Phase 1 programmatic compliance packages for Safety Document requirements as reflected by the S/RIDs are issued and periodically updated as Compliance Assurance and Implementation Reports in accordance with WSRC Procedure Manual 8B, Compliance Assurance Manual (Ref. 7). Site wide Phase 2 field performance verification is implemented through ongoing programs of Self Assessment and Facility Evaluation Board assessments in accordance with WSRC Procedure Manual 12Q, Assessment Manual (Ref. 8).

This SAR with associated DSA documentation (e.g., TSR and JCO) documents the adequacy of the existing SB for H–Canyon and OF–H per 10 CFR 830 requirements. This Rule requires a DSA describing the extent to which a nuclear facility can be operated safely with respect to the public, workers, and the environment. This DSA includes a description of the conditions, safe boundaries, and hazard controls that provide the basis for ensuring safety. DOE generates a SER which is the approval vehicle for the SB.

5.2 GRADED APPROACH COMPLIANCE

A graded approach is used in this SAR for compliance with DOE–STD–3009–94, "Preparation Guide for U.S. Department of Energy Nonreactor Nuclear Facility Safety Analysis Reports." Use of the Table 5–1 Compliance "roadmap" provides information on the application of a graded

approach for compliance with DOE–STD–3009–94 for the SAR. The order in which the topics are presented matches the chapters in DOE–STD–3009–94.

Hazard and Accident Analysis (DOE–STD–3009–94, Chapter 3 Topic)

In general, a graded approach dictates a more thoroughly documented assessment of complex, higher hazard facilities than simple, lower hazard facilities since grading is a function of both hazard potential and complexity. The basic elements of hazard identification, categorization, evaluation, and analysis are required for any facility. Accident analysis is also inherently graded in terms of the degree of physical modeling and engineering analysis needed to quantify accident consequences and likelihoods. Formal, quantitative analysis of potential accident sequences is not required to assess worker safety issues in addition to the hazard analysis. The largely qualitative hazard evaluation that is a thorough analysis of potential accidents is a more relevant vehicle for worker safety assurance.

The hazard analyses were completed using the guidelines contained in DOE–STD–3011–94 and DOE–STD–3009–94. PHAs are performed by a multi–disciplinary team with representatives from many different organizations. These organizations may include: hazard/accident analysis, engineering support, operations, regulatory compliance, radiation protection, nuclear criticality safety, fire protection, structural mechanics, industrial safety, etc. The hazard analysis process consists of two main parts. The first part is hazard identification and the second is hazard evaluation. Hazard identification is done by a physical walkdown of the facility, a paper walkdown, or a combination of the two. For a physical walkdown, the core team tours the facility and identifies hazards using hazards identification tables. The tables are based on the Management Oversight and Risk Tree (MORT) tables. The tables are screened for common industrial hazards. These are defined as hazards that are routinely encountered in general industry and construction, and for which national consensus codes and/or standards (e.g., OSHA and transportation safety) exist to guide safe design and operation.

The second part of the PHA is hazard evaluation. The purpose of the hazard evaluation is to ensure a comprehensive assessment of facility hazards and focus attention on those events that pose the greatest risk to the public, onsite workers and the environment. Information related to the hazard evaluation is collected in tabular form in the following categories; Event Number, Event Category (fire, explosion, loss of containment, etc.), Event Description, Causes, Preventive Features, Mitigation Features, Frequency Level, Consequence Level, and Risk Bin Number. The team makes an effort to identify all controls that could be credited to prevent or mitigate an event. The only controls that are specifically credited in the PHA are the passive, engineered features such as building structure, shipping containers, geometrically favorable vessels, etc.

The PHA Team makes qualitative and semi–quantitative estimates of frequency and consequence, as necessary. Based on these estimates, the events are binned as Scenario Class I, II, III, or IV events using the criteria in Appendix B of DOE–STD–3011–94. Those events classified as Scenario Class I & II, which are defined as those events of major serious concern, are carried forward to the Accident Analysis and the SAR for further evaluation.

An accident analysis is performed on Scenario Class I & II events which are thought to have significant potential for offsite consequences (either chemical or radiological). The PHA (Appendix H) did not have any events that exceeded the radiological and chemical EGs with the exception of the large fire from a tractor–trailer combination gasoline truck impact that is further discussed in Section 8.3.2.3.3. This event was subsequently determined to be BEU.

The purpose of this analysis is twofold, first, calculate a quantitative estimate of consequence and/or frequency, and second, evaluate the effectiveness of potential controls that have been identified to prevent and/or mitigate the event. The consequence analysis develops a source term based on five factors from DOE–STD–3009–94; material available for release, airborne release fraction, the Respirable Fraction (RF), the damage ratio and the leak path factor. Each factor is evaluated and a value is selected to develop a conservative analysis. Airborne releases are calculated using the MACCS. Liquid releases are calculated using LADTAP2. Consequences are calculated for receptors at 100 meters and the site boundary. Scenario Class I & II events which impact the facility worker are evaluated qualitatively using the qualitative consequence criteria of fatality, serious injury, and less than serious injury from DOE–STD–3011–94.

Frequency analysis may be performed either qualitatively using engineering judgment or quantitatively using fault tree analysis. In general, qualitative frequency estimates are developed using engineering judgment for low energetic events and quantitative frequency estimates using fault tree analysis are developed for medium or high energetic events.

Hazard and Accident Analysis information is in Section 8.1 “Facility Categorization and Hazard Identification,” Section 8.2 “Hazard Analysis and Accident Categorization”, and Section 8.3 “Accident Analysis." These sections describe the process used to identify and analyze the complete SAR accident spectrum to provide a conservative assessment of facility hazards and their controls. A complete, comprehensive, and adequate Hazard and Accident Analysis was completed that meets the scope and content required by DOE Order 5480.23 and DOE–STD–3009–94.

Table 5–1 Compliance "Roadmap" Table

DOE–STD–3009–94 Topic [Chapter No.]	Topic Scope and Content	Location of Topic in SAR, Generic SAR or Other Document	Compliance Evaluation
Executive Summary [No Chapter]	1. Summary of the facility background and mission. 2. Overview of the facility including location and boundaries. 3. Description of the facility hazard category. 4. Summary of the results of the facility safety analysis including operational hazards analyzed, DBAs, and significant preventive and mitigative features. 5. Summary of the facility organizations involved in safety functions. 6. Summary of the acceptability of the facility SB. 7. Guide to the structure and content of the SAR	1. Described in the "Executive Summary" and Section 2.2. 2. The location is cited in Section 2.2 and in the DSA Support Document – Site Characteristics and Program Descriptions (Ref. 9). 3. The facility is Hazard Category 2 as stated in the "Executive Summary" based on uranium and plutonium inventories. 4. The "Executive Summary" describes Section 8.3 that contains summary information about operational hazards, accidents, and significant preventive and mitigative features. 5. Section 6 addressed in the "Executive Summary" describes the H–Canyon programmatic approach to safety and safety programs including the organizations involved in integrated safety management. 6. The "Executive Summary" states that the DSA provides adequate controls to protect the workers, public, and the environment. The summary tables favorably depict the bounding accident consequence as compared to the Evaluation Guidelines for onsite and offsite receptors. 7. The SAR structure and content is given in the "Executive Summary."	The H–Canyon SAR is compliant with the graded approach methodology per DOE–STD–3009–94 because the information required for the Executive Summary by 3009–94 is included in the H–Canyon SAR. Additionally, the SAR references and invokes the S/RIDs, which contractually requires H–Canyon to comply with the applicable DOE orders, regulations, and requirements.

Table 5–1 (Continued) Compliance "Roadmap" Table

DOE–STD–3009–94 Topic [Chapter No.]	Topic Scope and Content	Location of Topic in SAR, Generic SAR or Other Document	Compliance Evaluation
Site Characteristics [Chapter 1]	1. Description of the location of the site, location of the facility within the site, its proximity to the public and to other facilities, and identification of the point where Evaluation Guidelines are applied. 2. Specification of population sheltering, population location and density, and other aspects of the surrounding area to the site that relate to assessment of the protection of the health and safety of the public. 3. Determination of the historical basis for site characteristics in meteorology, hydrology, geology, seismology, volcanology, and other natural phenomena to the extent needed for hazard and accident analyses. 4. Identification of design basis natural phenomena.	1. Section 2.2 has limited information and directs the reader to go to the DSA Support Document – Site Characteristics and Program Descriptions for additional information. 2. The protection of the health and safety of the public population is discussed in the DSA Support Document – Site Characteristics and Program Descriptions. 3. The DSA Support Document – Site Characteristics and Program Descriptions considers the applicable site characteristics required for comprehensive evaluations and analyses. 4. Applicable H–Canyon and OF–H design basis natural phenomena are addressed in the Safety Evaluation Section 8 and in the DSA Support Document – Site Characteristics and Program Descriptions.	The H–Canyon SAR is compliant with the graded approach methodology per DOE–STD–3009–94 since the information required for the Site Characteristics summary by 3009–94 is included in the H–Canyon SAR directly or by reference to the appropriate documents.
Site Characteristics [Chapter 1] (Continued)	1. Identification of sources of external accident, such as nearby airports, railroads, or utilities such as natural gas lines. 2. Identification of nearby facilities impacting, or impacted by, the facility under evaluation.	1. There are no oil pipeline or natural gas networks at SRS as stated in the DSA Support Document – Site Characteristics and Program Descriptions. The other sources of external accidents as applicable to H–Canyon and OF–H are discussed in Section 8 of the SAR and in the DSA Support Document – Site Characteristics and Program Descriptions. 2. Nearby facilities that could have a potential impact on H–Canyon and OF–H are described in Section 2.17. DSA Support Document – Site Characteristics and Program Descriptions lists more detailed information on other site and offsite facilities.	

Table 5–1 (Continued) Compliance "Roadmap" Table

DOE–STD–3009–94 Topic [Chapter No.]	Topic Scope and Content	Location of Topic in SAR, Generic SAR or Other Document	Compliance Evaluation
	3. Validation of site characteristic assumptions common to safety analysis used in prior environmental analyses and impact statements, or of the need to revise and update such assumptions used in facility environmental impact statements.	3. Validation of assumptions common to the analyses is listed in the individual analyses and in DSA Support Document – Site Characteristics and Program Descriptions.	
Facility Description [Chapter 2]	1. Overview of the facility, its inputs and its outputs, including mission and history. 2. Description of the facility structure and design basis. 3. Description of the facility process systems and constituent components, instrumentation, controls, operating parameters, and relationships of SSCs 4. Description of confinement systems. 5. Description of the facility safety support systems. 6. Description of the facility utilities.	1. An overview of H–Canyon is described in Section 2 and Section 7 in the SAR. 2. The structure layout and overall design basis are discussed in Section 2. Additional structural details of the facility are delineated throughout Section 8 for prevention and mitigation of potential accident scenarios. 3. The facility process systems including the associated SSCs and controls are described throughout this SAR (primarily in Sections 2 and 8) and in the TSR to ensure operation within the safety envelope. Additional controls and the interrelationships of the SSCs are described in the accident scenarios and appropriately credited for preventing and mitigating the dominant accidents identified in the PHA. 4. The confinement systems are summarized in Section 2, but discussed extensively in the dominant accident evaluations in SAR Section 8.3 and the TSR Bases. 5. Safety support systems are included in each potential accident scenario analysis as required in Section 8. The specific discussion identifies the purpose of the system and its contribution to operations along with the main components and control functions. Additional information addressing site programs that provide safety support are addressed in Section 6 and in the AC section of the TSR. 6. The incorporation of the facility utility systems is located in both the SAR and TSR text where necessary to enhance understanding of the facility operation and its interrelationship with the safety controls. An example would be the Bases for LCO 3.2.1, SCW System or LCO 3.4.1, 254–19H DGs.	The H–Canyon SAR is compliant with the graded approach methodology per DOE–STD–3009–94 since the facility, equipment, and processes are described in the H–Canyon SAR and TSR explicitly or by reference to the appropriate documents.

Table 5–1 (Continued) Compliance "Roadmap" Table

DOE–STD–3009–94 Topic [Chapter No.]	Topic Scope and Content	Location of Topic in SAR, Generic SAR or Other Document	Compliance Evaluation
	7. Description of facility auxiliary systems and support facilities.	7. Any support facility or auxiliary system germane to the safety analyses is described in the respective dominant accident scenario in Section 8.3.	
Hazard and Accident Analysis [Chapter 3]	1. Description of the methodology for and approach to hazard and accident analyses.	1. Section 8.2, Hazard Analysis and Accident Categorization, describes the approach used to identify hazards, classify hazards, and evaluate hazards qualitatively (as documented in the H–Canyon PHA). The accidents are discussed in detail in Section 8.3, "Accident Analysis."	The H–Canyon SAR is compliant with the graded approach methodology per doe–std–3009–94 since the facility hazard category has been determined and the accident and hazard analysis has been completed and is included in the h–canyon SAR. The hazards analysis is referenced and is the basis for selecting the dominant accidents analyzed in the SAR accident analysis.
	2. Identification of hazardous materials and energy sources present by type, quantity, form and location.	2. The energy sources and hazardous materials are discussed in Section 8.2 and were identified and listed for unit operations, systems, and associated areas. Information for identifying hazards and determining their applicability to the facility were obtained from existing safety/environmental/project documents, design drawings and reviews, test plans and studies, facility walkdowns and equipment data, and consultations with facility system or process experts.	
	3. Facility hazard classification, including segmentation in accordance with DOE–STD–1027–92.	3. The facility has been classified as a Hazard Class 2 facility, using the methodology presented in DOE –STD–1027–92 as discussed in Section 8.1, "Facility Categorization and Hazard Identification."	
	4. Identification in the hazard analysis of the spectrum of potential accidents at the facility in terms of largely qualitative consequences and frequency estimates. a. Identification of planned design and operational safety improvements.	4. The potential accidents for H–Canyon and OF–H operations are described throughout Section 8 and summarized in Table 8.3–1, "Summary Table of Results of PHA Risk Matrix Binning for H–Canyon Operations." a. Design and operational safety improvements are identified and implemented as part of the continual improvement process which includes for example, the Integrated Safety Management System (ISMS) (Section 6.3.1) and new analytical calculations performed for additions or revisions to operations. Another example is new passive controls for the HEU Blend Down Project, which are planned for future incorporation in the SAR and TSR as the project matures.	

Table 5–1 (Continued) Compliance "Roadmap" Table

DOE–STD–3009–94 Topic [Chapter No.]	Topic Scope and Content	Location of Topic in SAR, Generic SAR or Other Document	Compliance Evaluation
Hazard and Accident Analysis [Chapter 3] (Continued)	b. Summary of defense in depth, including identification of safety–significant SSCs and other items needing TSR coverage in accordance with DOE Order 5480.22.	b. Safety–significant SSCs as well as additional non–credited Defense–in–Depth (DiD) controls are delineated throughout Section 8.3 in the Preventive and Mitigative Features of each potential accident scenario and in Table 8.3–2, as appropriate. Section 8.5, "Non–SC/SS Defense–in–Depth Controls" addresses the two required controls for compliance with a low fractional percentage of Evaluation Guidelines.	
	c. Summary of the significant worker safety features, including identification of safety–significant SSCs and any relevant programs to be covered under TSR ACs.	c. Significant safety features including relevant programs for each potential accident scenario are summarized in Table 8.3–2, "Summary Table of Controls for H–Canyon and Outside Facilities H–Area Dominant Accidents."	
	d. Summary of design and operational features that reduce the potential for material releases to the environment.	d. The features that reduce the potential for large material releases are embodied in the write–up for each accident scenario in Section 8.3.	
	e. Identification of the limited set of unique and representative accidents (i.e., DBAs) to be assessed further in accident analysis.	e. The list of accident scenarios is identified in the Executive Summary for Class I and II accidents. The limited set of accidents that are considered DBAs are identified and individually discussed in Section 8.3	
	5. Accident analysis of DBAs identified in the HA. The analyzed accident summary of this activity will include, the following:	5. The accident analysis in Section 8.3 with the source terms and consequences given in Addendum 1 for H–Canyon and Addendum 2 for Outside Facilities.	
	a. Estimation of source term and consequence.	a. The source terms and accident consequences are given in the addenda to the SAR.	
	b. Documentation of the rationale for binning frequency of occurrence in hazard analysis (detailed probability calculations not required).	b. The rationale for binning frequency of the potential accidents is described in Section 8.2. The supporting documentation is delineated in Section 8.3 for each accident scenario.	
	c. Documentation of accident assumptions and identification of safety–class SSCs based on Evaluation Guidelines.	c. The safety–class SSCs and accident assumptions are described in Section 8.3 for each accident scenario.	

Table 5–1 (Continued) Compliance "Roadmap" Table

DOE–STD–3009–94 Topic [Chapter No.]	Topic Scope and Content	Location of Topic in SAR, Generic SAR or Other Document	Compliance Evaluation
Safety Structures, Systems and Components [Chapter 4]	1. Description of safety SSCs, including safety functions. 2. Identification of support systems safety SSCs depended upon to carry out safety functions. 3. Identification of the functional requirements necessary for the safety SSCs to perform their safety functions and the general conditions caused by postulated accidents under which the safety SSCs must operate. 4. Identification of the performance criteria necessary to provide reasonable assurance that the functional requirements are met. 5. Identification of assumptions needing TSR coverage.	1. Each dominant accident scenario includes discussion on the preventive and mitigative safety controls and their specific safety function in Section 8.3. 2. The support systems or component depended upon to ensure safety SSC operation are listed in SAR Table 8.3–2 (e.g., emergency DGs) and described in detail in the TSR Bases or in other supporting documents. . 3. SC, SS, and DiD equipment, including the conditions under which it must operate, are documented in the SAR and TSR. The bases for the selection of this equipment are documented in the Functional Classification Report (FCR) and the DiD report that are referenced in the SAR. 4. The operating criteria are listed in the TSR and the FCR and identified so that the selected safety controls can perform their function under normal and DBA conditions. 5. The rationale for TSRs is included in the accident analysis in Section 8.3, and conveniently listed in Table 8.3–2 for each dominant accident.	The H–Canyon SAR is compliant with the graded approach methodology per DOE–STD–3009–94 in that the safety related SSCs and supporting systems are described in the SAR, TSR, or in supporting documents included by reference in the SAR or TSR.

Table 5–1 (Continued) Compliance "Roadmap" Table

DOE–STD–3009–94 Topic [Chapter No.]	Topic Scope and Content	Location of Topic in SAR, Generic SAR or Other Document	Compliance Evaluation
Derivation of TSR [Chapter 5]	1. Information with sufficient basis from which to derive, as appropriate, Safety Limits, Limiting Control Settings, LCO, or SRs.	1. The information used to derive the need for Safety Limits, Limiting Control Settings, etc., is described in Section 8 and Table 8.3–1 of the SAR, the "H–Canyon Preliminary Hazard Analysis," and in the "H–Canyon Functional Classification Report." The SAR incorporates the results of the other two documents and includes the analysis that depicts the rationale in selecting the appropriate safety controls.	The H–Canyon SAR is compliant with the graded approach methodology per DOE–STD–3009–94 in that the TSR derivations are described in the SAR, TSR, or in supporting documents referenced in the SAR and TSR.
	2. Information with sufficient basis from which to derive TSR administrative controls for specific controls features or to specify programs necessary to perform institutional safety functions.	2. The basis for specific TSR ACs and programs are adequately addressed in the individual accident scenario write–ups.	
	3. Identification of passive DFs addressed in the SAR.	3. The SAR describes the rationale for specific passive DFs listed in the accident scenario write–ups. These passive features of the facility, which if altered or modified could have an effect on safe operation, are further explained in Appendix B of the TSR.	
	4. Identification of TSR from other facilities that affect the facility's SB.	4. Identification of TSR requirements from other facilities is addressed in Section 8.6. However, the one unique requirement to protect another facility's accident analysis is not required to prevent or mitigate any accident in H–Canyon.	

Table 5–1 (Continued) Compliance "Roadmap" Table

DOE–STD–3009–94 Topic [Chapter No.]	Topic Scope and Content	Location of Topic in SAR, Generic SAR or Other Document	Compliance Evaluation
Protection of Inadvertent Criticality [Chapter 6]	1. Summary of the overall site–specific, criticality protection policy and program. 2. Description of the basis and analytical approach the facility used for deriving operational criticality limits. 3. Summary of design and administrative controls used by the criticality protection program.	1. The overall site criticality protection program is described in WSRC SCD–3, "Nuclear Criticality Safety Manual." The facility specific criticality program is described in the "H–Canyon Double Contingency Analysis." Both of these documents are discussed in the SAR, Section 6.5.9. 2. The H–Canyon operational CSLs are listed in the TSR, Section 5. The SAR contains an overview of the Nuclear Criticality Safety Program (NCSP), summarizes the controls and refers the reader to the DCA for the specific controls and their bases. 3. The summary of the nuclear criticality program is in Section 6.5.9 of the SAR. The listing of the controls required to protect the facility worker is located in Section 8.3 of the SAR and Section 5 of the TSR. • The "Radiation Protection Program" is described in the TSR, Section 5.7.2.6, and in the SAR, Section 6.10. The SAR references WSRC Procedure Manual 5Q, "Radiological Control Manual," specifically highlights the ALARA approach to exposure management, and defers to WSRC Procedure Manual 5Q for a detailed description of and implementation of the Radiation Control Program. This manual addresses the six main points depicted in DOE–STD–3009–94.	The H–Canyon SAR is compliant with the graded approach methodology per DOE–STD–3009–94 since the site-wide and facility specific criticality programs and controls are described in the SAR, TSR, SCD–3, and the DCA.

Table 5–1 (Continued) Compliance "Roadmap" Table

DOE–STD–3009–94 Topic [Chapter No.]	Topic Scope and Content	Location of Topic in SAR, Generic SAR or Other Document	Compliance Evaluation
Radiation Protection [Chapter 7]	1. Description of the overall radiation protection program and organization.	1. The overall radiation protection program (RPP) in 5Q conducted at SRS includes the plans, schedules, and other measures for achieving compliance with the regulations of 10 CFR 835. Chapter 1 of 5Q describes the Rad Con Organization established to provide relevant support.	The H–Canyon SAR is compliant with the graded approach methodology per DOE–STD–3009–94 since the SAR generically describes the radiation control program and includes the appropriate references to the WSRC site-wide radiation protection and ALARA programs. Additionally, the SAR and TSR lists those specific components or elements (e.g., alarming dosimetry) of the rad con program that are relied upon for worker safety.
	2. Description of the radiological ALARA policy and program.	2. Description of the ALARA policy and program are found in Chapter 1 of 5Q, Section 6.10 of the SAR, and Section 5.7.2.6 of the TSR.	
	3. Description of radiation exposure controls including administrative limits, radiological practices, dosimetry, and respiratory protection.	3. These limits are included in the WSRC Procedure Manual 5Q and reflect the latest DOE and WSRC policies and exposure limits. Administrative limits are discussed in Chapter 2, Radiological Standards, which lists the types of exposure and the annual DOE limits. Radiological practices are discussed in Chapter 3, Conduct of Radiological Work. Radiological practices, such as RWPs, are used as an administrative mechanism to establish Rad Cons for intended work activities. Dosimetry is detailed in Chapter 5, Radiological Health Support Operations, specifying the requirements for different types of dosimetry (e.g., pocket, electronic, neutron, or area). Different types (e.g., particulate or gas–filtering cartridge respirators, supplied air respirators or airline supplied–air suits and hoods) of respiratory protection equipment are also described in Chapter 5 along with the associated requirements.	
	4. Identification of radiological monitoring to protect workers, the public, and the environment.	4. Individual, periodic, and continuous monitoring with engineering controls to minimize internal exposure and airborne radioactivity are stated in Chapter 5 of WSRC Procedure Manual 5Q, to demonstrate compliance with 10 CFR 835.	
	5. Discussion of radiological protection instrumentation.	5. Radiological protection instrumentation availability, calibration, use and testing are discussed in Chapter 5 of WSRC Procedure Manual 5Q.	
	6. Description of the plan and procedures for maintaining records of radiation sources, releases, and occupational exposures.	6. The description of the plan and procedures for maintaining the required records is found in the WSRC Records Management procedure in the WSRC Procedure Manual 1Q and in Chapter 7 of the WSRC Procedure 5Q.	

Table 5–1 (Continued) Compliance "Roadmap" Table

DOE–STD–3009–94 Topic [Chapter No.]	Topic Scope and Content	Location of Topic in SAR, Generic SAR or Other Document	Compliance Evaluation
Hazardous Material Protection [Chapter 8]	1. Description of the overall hazardous material protection program and organization.	1. The WSRC hazardous material protection program, described in SAR Section 6.5.15 and the DSA Support Document – Site Characteristics and Program Descriptions, Chapter 8 is the IH Program established by the WSRC Procedure Manual 4Q. This program is committed to providing a place and condition of employment free from or protected against, recognized hazards that cause, or are likely to cause, sickness, impaired health and well–being, or significant discomfort and inefficiency among workers.	The H–Canyon SAR is compliant with the graded approach methodology per DOE–STD–3009–94 since the SAR generically describes the Hazardous Material Protection Program and includes the appropriate references to the WSRC site-wide hazardous material protection and ALARA programs. Additionally, the SAR and TSR list those specific components, elements, administrative controls, or SSCs that are relied upon for Protection of the offsite public, the worker, and the environment.
	2. Description of the hazardous material ALARA policy and program.	2. The hazardous material ALARA policy and program at WSRC is described in the WSRC Procedure Manual 4Q, which is referenced in the H–Canyon SAR. This program establishes and implements the ALARA requirements for hazardous materials.	
	3. Description of hazardous material exposure control including identification of hazardous material, administrative limits, occupational medical programs, and respiratory protection.	3. Airborne hazardous sampling and monitoring, as described in the WSRC Procedure Manuals 3Q, 4Q, and 5Q, are conducted inside and outside the boundaries of the facility to protect all three groups of receptors and the environment.	
	4. Identification of hazardous material monitoring to protect workers, the public, and the environment.	4. Hazardous material protection instrumentation and requirements are identified in the WSRC Procedure Manuals 3Q, 4Q, and 5Q and are implemented for the facility, where required.	
Hazardous Material Protection [Chapter 8] (Continued)	1. Discussion of hazardous material protection instrumentation.	1. The hazardous material exposure control is described in 4Q. Each element of an effective hazardous material control program is identified and implemented in the WSRC Procedure Manual 4Q. Additional TSR controls are described in Section 5 (e.g., Chemical Inventory Program [5.7.2.9] or Process Controls that Address Inadvertent Transfers, Releases, and Loss of Containment [5.7.2.10]) and Appendix B – DFs (B.1.14).	

Table 5–1 (Continued) Compliance "Roadmap" Table

DOE–STD–3009–94 Topic [Chapter No.]	Topic Scope and Content	Location of Topic in SAR, Generic SAR or Other Document	Compliance Evaluation
	2. Description of the plans and procedures for maintaining hazardous material records, hazard communications, and occupational exposures.	2. Record keeping complies with Management Requirement and Procedure (MRP) 3.31, QAP 17–1, and the WSRC Procedure Manuals 3Q, 4Q, and 5Q, which establish the responsibilities and requirements for the records portion of the WSRC IH program. The SRS hazard communication program, described in the WSRC 3B manual, implements the OSHA hazard communication standard for communicating chemical hazards to employees. Occupational exposure prevention is described in the 4Q manual and requires assessments to identify methods to reduce exposure and training on methods to prevent or mitigate potential exposures under normal or abnormal conditions.	
Radioactive and Hazardous Waste Management [Chapter 9]	1. Description of the overall radioactive and hazardous waste management program and organization. 2. Description of the site–specific radioactive, mixed, and hazardous material waste management policy, objectives, and philosophy. 3. Identification of hazardous waste streams, including types, sources, and quantities. 4. Description of the waste management process, and waste treatment and disposal systems, including design and administrative controls.	1. Section 6.18 references the WSRC Procedure Manual 1S, "Savannah River Site Waste Acceptance Criteria Manual" which describes the overall waste management program and organization required per DOE Order 435.1. 2. The Radioactive Waste Management Basis (RWMB), which includes the WSRC Procedure Manual 1S, ensures compliance with all federal, state, and local radioactive waste regulatory requirements. The site and facility specific documents listed in the RWMB are approved by DOE as part of the H–Canyon Authorization Agreement (AA). 3. The identification, segregation, packaging, and shipment of waste to an appropriate treatment, storage, or disposal facility are required as part of the facility's waste certification plan. This plan is also part of the RWMB. 4. The controls listed in the various documents that address the waste management process are delineated in S/RID Functional Area 16, "Waste Management." The WSRC Procedure Manual 1S is the primary means for implementing the requirements and performance objectives contained in the S/RID.	The H–Canyon SAR is compliant with the graded approach methodology per DOE–STD–3009–94 since the SAR generically describes the Radioactive and Hazardous Waste Management Programs and includes the appropriate references to the WSRC site-wide programmatic requirements.

Table 5–1 (Continued) Compliance "Roadmap" Table

DOE–STD–3009–94 Topic [Chapter No.]	Topic Scope and Content	Location of Topic in SAR, Generic SAR or Other Document	Compliance Evaluation
Initial Testing, In–Service Surveillance, and Maintenance [Chapter 10]	1. Description of the facility initial testing program. 2. Description of the facility in–service surveillance program. 3. Description of the planned, predictive, preventive, and corrective facility maintenance programs.	1. This topic is addressed throughout Section 6 (e.g., 6.5, 6.13, and 6.17) and in WSRC Procedure Manual 1Y, Conduct of Maintenance. Initial testing programs are incorporated to ensure the operability of a facility modification prior to service. WSRC Procedure Manuals 7E, "Configuration Management Manual," and WSRC Procedure Manual 5E, "Startup Test Manual," establish the requirements, implementing procedures, and responsibilities for managing the configuration of SSCs including process computer software and outline the requirements for starting or restarting a facility, respectively. 2. The facility in–service surveillance program as described in SAR Sections 6.5.13 and 6.17 and in the WSRC Procedure Manuals 1Y and 1Q. 3. The maintenance program requirements are included in SAR Sections 6.5.12, 6.5.13, 6.13, and in the WSRC Procedure Manual 1Y. The WSRC Procedure Manual 1Y provides the details on the different types of maintenance programs.	The H–Canyon SAR is compliant with the graded approach methodology per DOE–STD–3009–94 since the SAR generically describes the testing, surveillance, and maintenance programs that are required to ensure safe facility operations.
Operational Safety [Chapter 11]	1. Identification of the aspects of Conduct of Operations directly applicable to the facility. 2. Integrated summary of the main features of the facility Conduct of Operations program. 3. Description of facility fire protection program.	1. The applicable facility aspects are identified in S/RID Functional Area 9 and the primary source of guidance for implementing Conduct of Operations is the "Conduct of Operations Manual 2S" as described in Section 6.15 of the SAR. S/RID Table 3–4 lists the specific H–Canyon Conduct of Operations compliance requirements, whereas Table 2 lists the applicable site common controls applicable to the facility. The OSRs are defined in the 3Q, 4Q, 8Q, and other WSRC policy manuals. 2. The main features of the facility program are listed in S/RID Functional Area 9 and in the WSRC Procedure Manual 2S as referenced in SAR Section 6.15. 3. The facility fire protection program is described in Section 6.5.8 of the SAR. The program is procedurally implemented through WSRC Fire Protection Program Manual, WSRC Procedure Manual 2Q. Additionally, the SAR accident analysis in Chapter 8 identifies those administrative controls and SSCs that are relied upon to prevent or mitigate a fire in the facility.	The H–Canyon SAR is compliant with the graded approach methodology per DOE–STD–3009–94 since the SAR generically describes the fire protection program and includes the appropriate references to the WSRC site wide fire protection program. Additionally, the SAR and TSR list those specific components, elements, administrative controls, or SSCs that are relied upon for preventing or mitigating a fire in the facility.

Table 5–1 (Continued) Compliance "Roadmap" Table

DOE–STD–3009–94 Topic [Chapter No.]	Topic Scope and Content	Location of Topic in SAR, Generic SAR or Other Document	Compliance Evaluation
Procedures and Training [Chapter 12]	1. Summary of the overall facility procedures and training programs.	1. The formalized system of procedures is implemented as described in the Conduct of Operations Manual, WSRC Procedure Manual 2S in Section 6.5 of the SAR and summarized in SAR Table 6.2. The TSR addresses activities that require written procedures and training in Section 5.7. Training is covered under operational activities in this section of the TSR, and described in SAR, Section 6.8, which references the WSRC Procedure Manual 4B, "Training and Qualification Program Manual."	The H–Canyon SAR is compliant with the graded approach methodology per DOE–STD–3009–94 since the SAR generically describes the procedures and training programs and requirements and provides references to the appropriate implementing manuals.
	2. Description of the processes by which the form and content of procedures and training materials are developed, verified and validated for normal, abnormal, and emergency operations; surveillance testing and maintenance.	2. The SAR references the WSRC Procedure Manual 2S for the specifics on the form and content for generating, reviewing, accepting, and maintaining technical procedures for normal, abnormal, and emergency operations. WSRC–SCD–2, "Procedure Writing" implements the S/RID requirements for this program. Administrative procedures required to carry out a facility's technical programs are in WSRC Procedure Manuals 1B and E7. The WSRC Procedure Manual 4B provides the guidelines for developing, reviewing, accepting, and maintaining training materials. Unique requirements for training such as criticality (WSRC–SCD–3), radiation and hazardous material (WSRC Procedure Manuals 3Q, 4Q, and 5Q), maintenance (WSRC Procedure Manuals 1Y and 2S), fire protection (WSRC Procedure Manual 2Q), QA (WSRC Procedure Manual 1Q), and emergency preparedness (WSRC Procedure Manual 6Q), are incorporated into the training materials as appropriate.	

Table 5–1 (Continued) Compliance "Roadmap" Table

DOE–STD–3009–94 Topic [Chapter No.]	Topic Scope and Content	Location of Topic in SAR, Generic SAR or Other Document	Compliance Evaluation
Procedures and Training [Chapter 12] (Continued)	3. Summary of the processes for maintaining written procedures, training materials, and training records.	3. To assure proper dissemination and utilization of facility procedures involving maintenance and control see WSRC Procedure Manual 2S. The process for maintaining training materials is described in the WSRC Procedure Manual 4B as referenced in SAR Section 6.8. Training records are maintained in the Training Records and Information Network (TRAIN).	
	4. Summary of the process for modifying procedures and training materials.	4. Procedures are modified per the WSRC Procedure Manual 2S whereas training materials are modified per 4B. If a change is major involving basic process variables, personnel safety, equipment protection, or nuclear safety review considerations, the validation and verification process in WSRC Procedure Manual 2S is applied to accomplish the procedure change. Procedure revisions generally involve the USQ process and engineering review and approval as indicated in SAR Sections 6.5.4 and 6.5.6. Training materials are modified using WSRC Procedure Manual 4B that ensures Lessons Learned, occurrences, significant items, and other pertinent information acquired through external or internal sources are screened, evaluated, and incorporated, when applicable.	
	5. Summary of the methods used to feed back operations experience, new analyses, other SAR changes, etc. to the procedures and training programs.	5. The SAR in Section 6.3.1 references the WSRC Integrated Safety Management (ISM) Program, which consists of a continuous cycle of evaluations and feedback to improve operations and safety. Additionally, the site review and audit program, as defined in the WSRC Procedure Manual 12Q is described and referenced. The site wide lessons learned and operating experience programs are also used to feed back operational experience to the procedures and training programs. An effective program exists for providing SAR and TSR changes to the training program.	
	6. Description of the mechanisms to identify and correct technical or human factors deficiencies	6. The SAR describes and references the ISM Program, review and audit programs, training programs, Site Item Reportability and Issue Management (SIRIM) (WSRC 9B Manual) and other programs that contain the specific mechanisms by which identified deficiencies are corrected.	

Table 5–1 (Continued) Compliance "Roadmap" Table

DOE–STD–3009–94 Topic [Chapter No.]	Topic Scope and Content	Location of Topic in SAR, Generic SAR or Other Document	Compliance Evaluation
Human Factors [Chapter 13]	1. Human factors engineering that focuses on designing facilities, systems, equipment, and tools so they are sensitive to the capabilities, limitations, and needs of humans.	1. H–Canyon and OF–H were designed and constructed before Human Factors became a requirement to consider in the design. The SAR references the S/RIDs, conduct of operations, and other programs that stress human factors and ergonomics in design and operation. Human factors engineering is reflected in new designs and in upgrades to existing SSCs. The human factors design focus is on system and component arrangement, displays, controls, alarms, labeling, communications, workspace layout, and equipment design. Additionally, it focuses to eliminate negative ergonomic factors (e.g., inadequate lighting, glare, or limited equipment adjustment capability). Human factors checklists are used, where appropriate, to systematically evaluate the importance of human factors in facility safety.	The H–Canyon SAR is compliant with the graded approach methodology per DOE–STD–3009–94 since the SAR generically describes and includes by references the applicable WSRC programs that require and implement the human factors design requirements. Additionally, the SAR accident analysis includes human error probabilities in the accident frequency determinations.
	2. Human reliability analysis that quantifies the contributions of human error to the facility risk	2. Human reliability analysis is integral to the performance of operations analyses when implementing WSRC 2S, Conduct of Operations. Human factors are evaluated as part of Accident Analysis, DCA, and Functional Classification. The accident analysis in SAR Chapter 8 identifies those Human Error failures that contribute to the accident scenario. Human error factors that affect facility safety and risk are evaluated in the accident analysis.	

Table 5–1 (Continued) Compliance "Roadmap" Table

DOE–STD–3009–94 Topic [Chapter No.]	Topic Scope and Content	Location of Topic in SAR, Generic SAR or Other Document	Compliance Evaluation
QA [Chapter 14]	1. Description of QA program and organization.	1. The facility program is summarized in Section 6.12 of the SAR and in TSR Section 5.7.2.7. The WSRC QA Program and organizational structure have been tailored to apply sitewide as described in WSRC Procedure Manual 1Q, "Quality Assurance Manual."	The H–Canyon SAR is compliant with the graded approach methodology per DOE–STD–3009–94 since the SAR generically describes the QA Program for the facility and includes other QA requirements by referencing the WSRC QA Program in the 1Q Manual.
	2. Description of document control and records management.	2. Document control and records management are described in separate procedures of WSRC Procedure Manual 1Q. QAP 6–1 establishes the requirements and responsibilities to assure documents, including changes, are reviewed for accuracy and approved for release by authorized personnel and are distributed to and used for the prescribed facility activity. QAP 17–1 establishes the requirements for the identification, administration, and storage of documents designated as QA Records.	
	3. Description of the QA process ensuring that performed safety related work meets requirements.	3. The WSRC Procedure Manual 1Q QA Manual defines the QA Program in a standard framework of company policy, procedures, and instructions to be used in implementing quality–related activities. This framework is periodically assessed using different levels of assessments (e.g., self, management, and independent) to evaluate the performance against documented quality, safety, and environmental goals and objectives. The WSRC Procedure Manuals 1Y and 1Q referenced in SAR Sections 6.12, 6.13, 6.14, and 6.15 provide specific guidance on the QA requirements for the facility specific Maintenance, Work Control, and Conduct of Operations Programs	

Table 5–1 (Continued) Compliance "Roadmap" Table

DOE–STD–3009–94 Topic [Chapter No.]	Topic Scope and Content	Location of Topic in SAR, Generic SAR or Other Document	Compliance Evaluation
Emergency Preparedness [Chapter 15]	1. Identification of the scope of the facility Emergency Preparedness Plan.	1. The facility scope is described in SAR Section 6.5.7 and Section 5.7.2.1 of the TSR. The emergency planning addresses both individual and organizational responses to a range of potential accidents.	The H–Canyon SAR is compliant with the graded approach methodology per DOE–STD–3009–94 since the SAR generically describes the emergency preparedness program and references the WSRC site wide emergency preparedness program in the 6q manual. Where appropriate emergency preparedness actions are considered as preventers or mitigators of accidents in SAR chapter 8.
	2. Description of the philosophy, objectives, organization, and emergency response of facility emergency preparedness.	2. The facility emergency preparedness planning is described in 6Q, SRS Emergency Plan Management Program Procedures. The facility plan is included in the Emergency Plan Annex as discussed in the TSR, S/RID Functional Area 5, 6Q, and the SRS Emergency Plan for H–Area Separations, WSRC–SCD–7, Annex D.	
Provisions for Decontamination and Decommissioning [Chapter 16]	1. Description of DFs incorporated in major modifications of an existing facility to facilitate future D&D of the facility.	1. Applicable DFs in future major modifications will be included in the SAR as appropriate. The SAR currently describes the process areas and equipment that have been deactivated and/or removed from the facility. It also describes the limited decontamination efforts that have occurred in the facility. If required, D&D activities are evaluated by the USQ process prior to work commencement.	The H–Canyon SAR is compliant with the graded approach methodology per DOE–STD–3009–94. There are no current plans for D&D of H–Canyon. The SAR describes some of the D&D activities related to removed equipment or processes no longer conducted in the canyon that have occurred on a limited basis.
	2. Description of operational considerations to facilitate future D&D.	2. D&D activities are not foreseen in the immediate future as discussed in the SAR. Final decisions have not been made involving D&D of H–Canyon. It is expected that only limited D&D activities related to failed or replaced equipment will be conducted.	
	3. Description of conceptual D&D plan.	3. A conceptual D&D plan is described in WSRC Procedure Manual 1C, Facility Disposition Manual.	

Table 5–1 (Continued) Compliance "Roadmap" Table

DOE–STD–3009–94 Topic [Chapter No.]	Topic Scope and Content	Location of Topic in SAR, Generic SAR or Other Document	Compliance Evaluation
Management, Organization, and Institutional Safety Provisions [Chapter 17]	1. Description of the overall structure of the organization and personnel with responsibilities for facility safety and interfaces between those organizations.	1. Section 6.4 describes the H–Canyon organizational structure and management responsibilities. The Facility Manager is responsible for managing all aspects of facility operations including interfaces with, but not limited to the following areas, Rad Con, QA, training, staffing, industrial safety, maintenance, and procurement. The WSRC–1–01 Management Policies, which describes the WSRC Management Structure and policies, is referenced in SAR Section 6.3.	The H–Canyon SAR is compliant with the graded approach methodology per DOE–STD–3009–94 since the SAR generically describes the minimum set of the facility and WSRC management organizations. It also describes and/or references the various facility or site wide safety, configuration management, assessment, and other programs. Staffing qualifications and training requirements and programs are also discussed.
	2. Description of the programs that promote safety consciousness and morale, including safety culture, performance assessment, configuration and document control, occurrence reporting, and staffing and qualification.	2. The SAR in Sections 6.2, 6.3. 6.5.9, and 6.10 describes the various programs that promote safety consciousness and the WSRC Procedure Manual 1B, which establishes Management Requirements for safety and the WSRC Procedure Manual 5Q, SCD–3, and WSRC Procedure Manual 8Q, which establish and implement the safety programs. The safety program coupled with other actions such as the RadCon, ALARA, and safety observer programs promote safety consciousness. SAR Section 6.7 describes the facility assessment program and references the WSRC Procedure Manual 12Q for program implementation. Assessments are used to ascertain program effectiveness. SAR Section 6.5.12 describes the configuration control program and references the site wide CM program WSRC Procedure Manuals 7E and 1E, which implement configuration and document control to attain full accountability and traceability. SAR Section 6.6 describes the occurrence reporting requirement by reference to the SIRIM Procedure Manual 9B. The minimum qualified shift crew size is discussed in SAR Sections 6.4 and 6.8 and Table 6.1 and is implemented in TSR Section 5.2.2. Staff qualification and training requirements are addressed in SAR Sections 6.4 and 6.8, in the S/RIDs, and in the qualification requirements for other programs described in the SAR.	

5.3 REFERENCES

1. Jordan, J.F. to Schepens, R.J. WSRC Letter, NMS&S Proposal to Comply with 10 CFR 830, Subpart B for Existing Facilities. Westinghouse Savannah River Company. Aiken, SC. December 29, 2000.

2. Nuclear Safety Management. Title 10 Energy, Code of Federal Regulations Part 830. US Department of Energy. Washington, DC. February 2001.

3. Preparation Guide for U.S. Department of Energy Nonreactor Nuclear Facility Safety Analysis Reports. DOE–STD–3009–94. US Department of Energy. Washington, DC. July 1994.

4. Functional Area 18.0 Nuclear and Process Safety (U). WSRC–RP–94–1268–018, Rev. 01–05. Westinghouse Savannah River Company. Aiken, SC.

5. Sjostrom, L.C. Nuclear Material Stabilization Program Authorization Basis Documents (U). DOE–SR. Aiken, SC. July 24, 1996.

6. Technical Safety Requirements. DOE Order 5480.22. US Department of Energy. Washington, DC. February 1992.

7. Compliance Assurance Manual. WSRC Procedure Manual 8B. Westinghouse Savannah River Company. Aiken, SC.

8. Assessment Manual (U). WSRC Procedure Manual 12Q. Westinghouse Savannah River Company. Aiken, SC.

9. DSA Support Document – Site Characteristics and Program Descriptions (U). WSRC-IM-2004-00008, (Latest Revision), Westinghouse Savannah River Company, Aiken, SC.

6.0 SAFETY MANAGEMENT

6.1 INTRODUCTION

This section identifies and describes the policy provisions and administrative framework in place to assure safe operation within the facility DSA. It also provides an overview of the administrative control documents used to maintain safe operations. The principal safety concerns for H–Canyon and OF–H operations are:

- Ionizing radiation from fixed sources and from radioactive contamination.
- Loss of process fluids and aerosols to the facility atmosphere and environment.
- A criticality event deriving from accumulation of fissile material.
- Industrial hazards.
- Chemical hazards.

The following goals and requirements address the principal safety concerns. The remaining paragraphs of Section 6 describe the management programs that exist to ensure achievement of and compliance with these goals and requirements.

- Maintain individual occupational radiation exposure ALARA.
- Maintain nonradiological atmospheric and liquid releases within regulatory limits.
- Maintain offsite doses within regulatory limits and offsite radiological doses to the public ALARA by limiting radioactive releases to the lowest possible level.
- Maintain operations activities within the facility DSA.
- Operate in accordance with applicable industrial safety requirements.

The WSRC policy is that the safety and protection of employees and the public is the first priority, and that work will stop immediately rather than conduct a job in an unsafe manner. The safety policy is predicated on the belief that all injuries and accidents can be prevented and that any hazards that may result in injuries must be safeguarded.

These policies are implemented through a comprehensive safety program to protect facility workers from radiological, industrial and process hazards. This program is implemented by the WSRC Employee Safety Manual, WSRC Procedure Manual 8Q (Ref. 1), SRS Process Safety Management (PSM) Manual WSRC–IM–90–135 (Ref. 2), WSRC Procedure Manual 5Q, Radiological Control Manual (Ref. 3), WSRC Procedure Manual 4Q, Industrial Hygiene Manual (Ref. 4), and the WSRC Procedure Manual 11Q, Facility Safety Document Manual (Ref. 5). These programs, along with the SAR analyses, PHA, criticality studies, procedure development process, and training, serve to ensure the hazards to facility workers are understood and controlled.

The SRS PSM Program protects facility workers from process–based hazards. The principal objective of the PSM Program is to provide a periodic, systematic review of each SRS process having the potential to result in a catastrophic accident to minimize injuries and property damage resulting from process–related hazards. The program is constructed around the PHR, which is an organized effort to identify and evaluate the hazards associated with SRS processes and to identify potential improvements in process safety. The PHRs, except for the Electrical Distribution System PHR, have been eliminated and are no longer completed.

Although PHRs are no longer routinely used to evaluate hazards, other assessments/analyses are incorporated. The hazards, originally addressed in these PHRs, were reviewed and are adequately addressed in the H–Canyon and OF–H PHA. The Hazards Analysis, which is the basis for the accident analysis in this SAR, is updated as required to ensure it accurately reflects the operational hazards. Facility personnel complete Assisted Hazards Analyses for various tasks/activities as required by the Safety Manual (Ref. 1). When the workers are adequately protected and conducting operations in a safe manner, the safety of the public and the environment are also ensured.

The AC documents for the facility are designed to ensure that basic and important decisions are made only after appropriate review and that decisions that could significantly affect safety receive independent review.

6.2 WORKER PROTECTION

WSRC Employee Safety Manual, WSRC Procedure Manual 8Q (Ref. 1) contains administrative procedures that establish and describe the basic facility safety program. The site wide SRS Safety Program establishes the following fundamental principles, policies, and guidelines:

- All injuries are preventable.
- Facility management shall ensure compliance with OSHA standards, WSRC, and facility-specific procedures.
- Regular safety surveys of the facilities and work activities shall be conducted. Significant items identified on previous surveys shall be verified to be corrected.
- Nonexempt employees are encouraged to participate on task teams that conduct surveys and present monthly safety meetings.
- Emphasis shall be given to off-the-job safety as well as on-the-job safety.
- Safety rules shall be reviewed and updated every 2 years.
- Employees shall be instructed annually in:
    - Reporting and responding to emergencies.
    - Reporting violations of safety standards.

  - Provisions of S/RID Functional Area 19 (Ref. 6) for Government Owned Contractor Operated employee health and safety.

- Employees are guaranteed the right to report safety concerns to DOE.
- Employees are guaranteed protection from discrimination after reporting safety concerns to DOE.
- Employees are informed promptly of radiological or chemical exposures that exceed the DOE specified standards.
- Employees have the right to view their personal safety, health, and medical record within 15 days upon written request.
- Employees are required to comply with facility–specific safety rules when visiting other facilities.

6.3 MANAGEMENT POLICIES

General management policies and guidance are contained in WSRC Policy Manual WSRC–1–01 (Ref. 7). The scope and policy of the Safety Program as defined in WSRC, Procedure MP 4.5 is:

Policy: The Westinghouse Savannah River Company (WSRC) shall manage the SRS in a manner that ensures there is no undue risk of nuclear and process accidents that could adversely affect the health or safety of employees, visitors, members of the general public or the environment. For all activities, the continued assurance of the capability and capacity for safe operations will remain paramount to protect facilities and the environment from unacceptable risks.

Scope: This policy applies to all personnel engaged in nuclear and process related activities for WSRC, and shall be in effect during design, construction, normal and abnormal operations, maintenance, modifications, surveillance, transition, deactivation, decontamination, and decommissioning. The intent is not only to prevent accidents, but to make provisions to limit consequences should accidents occur.

The WSRC–1–01 Manual includes:

- Administrative and procedural controls delineate clear lines of responsibility and methods for safe operation under normal and emergency conditions.
- All changes to components, equipment, procedures, and systems required for facility safety require independent review.
- Decisions that have significant safety implications are reviewed by management.
- Safe boundaries for operation are carefully defined and approved by management, and communicated to all affected parties.

Management policies are implemented through procedures approved by WSRC management.

6.3.1 INTEGRATED SAFETY MANAGEMENT SYSTEM

WSRC–1–01, MP 1.22, Integrated Safety Management System contains the WSRC ISMS Policy requirements. The ISMS is defined in the S/RIDs (Ref. 6). The ISMS is a standards–based system wherein the framework for safety and health across the Department of Energy complex is based upon a set of written policies, rules, orders, and standards. The implementation of these standards enables WSRC to conduct work in a manner that ensures the protection of the workers, public, and the environment. The WSRC ISMS program is a dynamic system incorporating the concept of continuous improvement to support the worker, public, and environmental safety. The seven core principles in the WSRC ISMS program are as follows:

- Line Management Responsibility for Safety
- Clear Roles and Responsibilities
- Competence Commensurate with Responsibilities
- Balanced Priorities
- Identification of Safety Standards and Requirements
- Hazard Controls Tailored to Work Being Performed
- Operations Authorization

To support these principles, the ISMS program has five distinct functions. These functions are designed to make sure the lessons learned are incorporated into the safety programs. These functions are as follows:

- Define the Scope of Work
- Analyze the Hazards
- Develop and Implement Controls
- Perform the Work
- Feedback/Improvement

Additional details about the ISMS program are in the S/RIDs document (Ref. 6).

6.4 ORGANIZATIONAL STRUCTURE AND MANAGEMENT RESPONSIBILITIES

The major WSRC functions at SRS are assigned to one of two Business Units, each under direction of an Executive Vice President. The Business Unit Executive Vice Presidents report directly to the WSRC President. The M&O Organization Executive Vice President, through the

Operations Manager, and through the Material Disposition Manager is responsible for operations of separations facilities within H-Area, including H–Canyon. H–Canyon is managed by an H-Canyon Material Disposition Manager who reports to the H–Area Material Disposition Manager. The H–Area Material Disposition Manager reports to the Material Disposition Manager.

Current organizational charts that define the operational line of authority are maintained and available to operations personnel.

The H–Canyon Material Disposition Manager is responsible for managing all aspects of H–Canyon and OF–H facility operations including Rad Con, industrial safety, QA, personnel staffing, training, procurement, and facility maintenance. The H–Canyon Material Disposition Manager carries out these responsibilities by delegation to and direction of staff. Specifically, the H–Canyon Material Disposition Manager is responsible for the following, as specified in the H–Canyon Shift Operating Crew Staffing Requirements provided in ADMN 221–H–6060 (Ref. 9):

- Overall facility operation, with written delegation of succession to this responsibility during the absence of the H–Canyon Manager.
- Facility operation in accordance with approved TSRs, the DCA and this SAR.
- Facilitation and control of procedure changes, physical changes in plant configuration, and coordination of all work group activities within the facility.
- Ensuring that each on–duty shift is composed of at least the minimum shift crew composition shown in Table 6.1. (Note: the same table is in the ACs Section of the H–Canyon TSRs.) Any temporary deviation from these requirements must be justified by facility–specific analysis and approved by DOE.
- Ensuring that on–call support personnel are assigned and that technical support personnel are available to provide technical assistance to the Operations staff.
- Ensuring that facility control is carried out by qualified operators according to written procedures.
- Ensuring that H–Canyon Operations Specialists and Control Room Operators are subject to limitations when being assigned work outside of their regular schedules. These limitations are included in the following:
    - Procedures 2.13 “Nonexempt Overtime and Premium Pay” and 2.23 “Exempt Employee Overtime Administration” in the Human Resources Administrative Procedure Manual, WSRC Procedure Manual 5B (Ref. 10), and
    - Procedure 5.1, “Facility Operation Organization and Administration,” in the Conduct of Operations Manual, WSRC Procedure Manual 2S (Ref. 11).

The H–Canyon organization interacts with various other WSRC organizations in accomplishing the H–Canyon mission. Of these organizations, direct safety–related functions are provided by:

- RCO, which provides oversight of the Radiation Protection Program to assure that the radiation exposure of the facility personnel is maintained ALARA;
- Operations Evaluation Department (Facility Evaluation Board), which evaluates compliance to selective DOE orders and other requirements as listed in the S/RID (Ref. 6);
- Site Safety Review Committee, which convenes periodically to assess the adequacy of environment, safety, health, safeguards, security, and QA; and
- Facility Operations Safety Committee, which convenes periodically to review occurrences and to ensure significant issues are adequately evaluated.

The Shift Manager is responsible for the local command function of the facility. During any absence of the Control Room Supervisor from the control room, a designated, qualified individual assumes the command function.

6.5 SYSTEM OF CONTROL DOCUMENTS

A formalized system of procedures is employed, as described in Conduct of Operations Manual, WSRC Procedure Manual 2S (Ref. 11), to ensure the facility is operated and maintained as prescribed by the TSRs, the DCA, and this SAR. The SAR, DCA, and TSRs provide the requirements and bases for safe facility operation. The DCA, an implementing document, ensures safe implementation of the CSLs and controls identified in the TSR. These documents, in turn, are implemented by lower–tier procedures and documents. The lower–tier procedures and documents contain limits on variables and system operation that are at least as restrictive as those in the TSRs and DCA.

The SAR and TSR are the primary safety control documents. The DCA is a SB implementation document to ensure criticality safety is maintained. The LDD links the DSA requirements, except programmatic controls, from the TSR, and SAR to the operating and maintenance procedures that implement each DSA requirement. Additionally, the LDD links the requirements and controls in the DCA to the operating and maintenance procedures that affect criticality safety. The LDD is discussed in Section 4.2. Additional documents and controls are described below.

6.5.1 CONTRACTUAL AGREEMENT

The contract, DE–AC09–96SR18500 (as modified), describes the relationship between the contractor (WSRC) and the contracting officer (DOE).

6.5.2 STANDARDS REQUIREMENTS IDENTIFICATION DOCUMENT

The S/RID (Ref. 6) is an agreement between DOE–SR and WSRC that is invoked by the contract between DOE and WSRC. The S/RIDs, which are approved by the WSRC President and the

DOE–SR Manager, are a necessary and sufficient set of Environmental, Safety, and Health (ESH) requirements that govern facility operations. WSRC compliance with the S/RIDs indicates compliance with the applicable DOE directive requirement. The S/RIDs are an SRS site level document that also contains requirements unique to a specific facility.

S/RID requirements are drawn from a variety of sources. Sources of appropriate standards/requirements include the following:

- Applicable federal, state, and local laws and regulations, including DOE rules
- DOE Orders and other directives
- Relevant industry (consensus) codes and standards
- Other sources of relevant standards and guidance (e.g., international standards, established plant safety practices)

Each functional area S/RID contains a list of reference documents. This list includes only those documents cited as requirement sources, and is not intended to be an all–inclusive list of documents related to the functional area. Unless otherwise specified, the latest version of any cited federal, state, or local law is assumed to apply.

The S/RIDs are living documents. A formal process exists for revising the S/RIDs and obtaining management approval of the revisions. All new DOE directives related to ESH are reviewed against the appropriate S/RID Functional Area. The S/RIDs are revised to add new requirements or to remove or revise any outdated requirements.

6.5.3 AUTHORIZATION AGREEMENT

The AA is an agreement between DOE–SR and WSRC that specifically spells out which facility activities and/or processes are authorized for operation by DOE. The AA is prepared for a specific facility. The AA typically is issued after the facility or process area has completed the appropriate level of readiness review and a declaration of readiness and a request for startup has been sent from WSRC to DOE–SR. The AA is approved by the WSRC President and the DOE–SR Manager. The AA indicates WSRC and DOE–SR acceptance of the readiness of the facility to safely undertake the operation(s) included in the AA. See Sections 6.5.5 and 6.7 for information on the assessment process.

6.5.4 UNREVIEWED SAFETY QUESTION PROCESS

The WSRC USQ process is required by S/RID Functional Area 18 (Ref. 6) and is implemented by WSRC via Procedure 1.05 in the Administrative and Procedural Controls Manual, WSRC Procedure Manual 11Q, WSRC Facility Safety Document Manual (U) (Ref. 5). All proposed activities such as facility modifications, equipment modifications, operating procedure revisions that change the operational steps or intent of the procedure, activities that affect the facility process, operational controls or the method by which the processes are controlled or conducted,

other activities that could affect safe operation of the facility, and potential inadequacies (analytical errors or omissions) in the facility safety analysis are evaluated by the USQ process.

The USQ evaluation determines if the proposed activity or potential inadequacy is within the DOE approved facility safety envelope and if the risks associated with the proposed activity are within the DOE accepted facility risk. The proposed activity must be approved by DOE if the USQ evaluation indicates that a USQ exists. If no USQ is involved, WSRC implements the activity without DOE approval. Guidelines for determining if a USQ exists, based on changes in accident frequency and consequences, are contained in Procedure 1.05 in WSRC Procedure Manual 11Q (Ref. 5).

6.5.5 AUTHORIZATION OF STARTUP BY DEPARTMENT OF ENERGY

The Assessment Manual, WSRC Procedure Manual 12Q (Ref. 12) establishes a formal process for the startup/restart of nuclear facilities, processes, equipment, and systems at the SRS, and provides procedures for the uniform conduct of Readiness Self–Assessments, Operational Readiness Reviews (ORRs), and Readiness Assessments (RAs). ORR requirements defined in S/RID Functional Area 1 (Ref. 6) and DOE–SR Savannah River Implementing Procedure (SRIP) 400 (Ref. 13) are implemented through the WSRC Procedure Manual 12Q (Ref. 12). Completion of the appropriate readiness assessment is required before the AA (see Section 6.5.3) will be issued by WSRC and DOE–SR.

The WSRC Procedure Manual 12Q identifies the activities required of WSRC to accomplish nuclear facility startups. Based on the hazard category assigned to the activity startup, various levels of WSRC and DOE assessments are completed to ensure that requirements identified in startup planning documents have been satisfied prior to the startup. The WSRC Procedure Manual 12Q identifies the startup approval authority for various startup conditions.

6.5.6 PROCEDURES

Procedures are established, implemented, and maintained to address the activities specified in Table 6.2. They are reviewed to ensure conformance with the following:

- Procedures are approved by appropriate management levels per the approved programmatic or administrative procedures, which have been authorized by the Facility Manager or designee.

- To ensure the applicable requirements are incorporated, Engineering reviews new procedures and procedure changes that have a potential impact on facility configuration, operation, maintenance, nuclear safety, industrial safety, or environmental and health regulations.

- Engineering reviews and approves all operating and maintenance procedures directly related to the processes, the facility configuration, the process equipment, and any equipment, facilities, or processes necessary to support the facility.

"One Time Use Only" procedures provide instructions and limits for non–routine operations. "One Time Use Only" procedures are approved by appropriate management levels as described in the facility procedure approval program, which have been authorized by the Facility Manager or designee. Other disciplines may be required to review and approve a "One Time Use Only" procedure based on the subject matter. One Time Use Only procedures also have a USQ screening or evaluation performed, are limited in life, and do not authorize operation outside the TSR.

6.5.7 EMERGENCY PLAN

The WSRC Site Emergency Plan, contained in WSRC Procedure Manual 6Q (Ref. 14) and implemented in SCD–7 (Ref. 41), defines appropriate response measures for emergency management. The plan forms the policy basis for the conduct of operations related to emergency planning, response, and consequence mitigation. Under this policy, H–Canyon is responsible for the following:

- Implementing a facility emergency preparedness program consistent with the WSRC Procedure Manual 6Q.
- Maintaining area/facility emergency plan annexes and associated implementing procedures and updates on an annual or as–needed basis.
- Ensuring that an adequate facility Emergency Response Organization is established and maintained.

6.5.8 FACILITY FIRE PROTECTION PROGRAM

The facility Fire Protection Program is established to comply with S/RID Functional Area 12 (Ref. 6) and the WSRC Fire Protection Program described in the WSRC Procedure Manual 2Q (Ref. 42). The H–Canyon and OF–H Fire Protection Program, detailed in facility operating procedures is designed to minimize the following:

- Threats to the public or worker health or welfare from an internal or external fire.
- Hazards to site personnel from a fire.
- Delays to important DOE programs because of a fire.
- Safety and control system or property damage related to a fire.

6.5.9 NUCLEAR CRITICALITY SAFETY PROGRAM

S/RID Functional Area 18 (Ref. 6) requires each nuclear facility to establish a NCSP. The primary implementing document that provides the WSRC NCSP requirements is WSRC–SCD–3, WSRC Nuclear Criticality Safety Manual (Ref. 15). This Program is a formal, documented system for the control of nuclear safety parameters and their bases, identification, and

verification. The Program provides a tracking system for the status of audit findings. The Facility Manager ensures:

- NCSEs are completed as required.
- Facility personnel receive nuclear criticality safety training.
- Operations are controlled to comply with established subcritical margins.
- NIMs are installed and maintained as required for criticality detection.
- DCAs are completed for H–Canyon and OF–H.
- A program to ensure Double Contingency control of nuclear safety is established and maintained.

This Program has been successful in maintaining nuclear criticality safety in H–Canyon and OF–H. There have been no accidental criticalities in the history of these facilities.

6.5.9.1 Overview of the Nuclear Criticality Safety Program

The WSRC NCSP, documented in WSRC SCD–3 (Ref. 15), provides the basic requirements for the H–Canyon NCSP. The H–Canyon NCSP consists of a DCA program and preparation of NCSEs. The DCA and NCSE identify specific ACs and SSCs (e.g., instrumentation and equipment) credited with preventing an inadvertent nuclear criticality.

The H–Canyon PHA (Ref. 16) and this SAR identify the most likely areas where an inadvertent criticality can occur in H–Canyon or OF–H. The PHA was an input document to the DCA as well as to the SAR. The DCA evaluated the potential criticality scenarios identified in the PHA, developed the various initiating events for each criticality scenario, and developed two controls for those events that were determined to be credible. The other major input document to the DCA development was the original TSs for H–Canyon. The PHA identified the potential criticality scenarios and locations, and the TS information was used to identify credible controls to prevent the event.

After the DCA was developed, the DCA controls were reviewed to determine the proper functional classification of the controls. Those engineered features that met the modified SCD–3 definition and WSRC Procedure Manual E7, Procedure 2.25, criteria were selected as SS. The methodology for selection of the SS engineered features is given in the SAR. The SS engineered features are included in the TSR.

For the SAR input, the PHA categorizes event scenarios as Scenario Class I, II, III, or IV based on the estimated occurrence frequency and estimated consequences to the offsite public, the co–located worker, and the facility worker. Usually only the Scenario Class I and II events have to be carried forward to the SAR for additional analysis. However, for nuclear criticality the SAR evaluates all criticality events regardless of the scenario class as required by S/RID Functional Area 1 (Ref. 6) and the WSRC Procedure Manual E7, Procedure 2.25 (Ref. 17).

The potential for an inadvertent criticality occurring in H–Canyon was further evaluated through the application of an expert review process that considered credible and incredible criticality scenarios and identified double contingency controls for all credible scenarios. The incredible scenarios, along with the technical bases for the incredible determination, are documented in the DCA (Ref. 20). The credible criticality scenarios, the identified double contingency controls, and the technical bases for the credible determination and the control selection are contained within the DCA. As such, the criticality events identified in the HAs have been superseded by the credible criticality scenarios contained in the DCA (Ref. 20).

To facilitate implementation of the criticality safety controls, linking databases have been prepared. The LDD contains all the DSA requirements, except programmatic controls, in the TSR, SAR, and DCA. This database links the specific TSR, SAR, or DCA control to the appropriate equipment, SSC, or ACs and procedures that implement the control. The TSR, SAR, and the DCA controls coupled with the LDD ensure that positive control is maintained over those items necessary to protect the criticality accident analysis.

To ensure the TSR and DCA controls are identified as nuclear safety controls in the procedures, the steps directly related to the TSR or DCA control shall be identified with appropriate markings (e.g., stars around the procedure step) as required by current WSRC procedure guidance. The operators shall report failure to comply with a nuclear criticality safety step using the approved reporting process (e.g., SIRIM). Additionally, the instruments identified in the DCA controls that were not identified as SS and were not included in the TSR will be identified as IPI that protect criticality safety. These instruments shall have functional tests, calibrations, and other surveillances as necessary to ensure operability of the equipment. Similar to the TSR identified SS equipment or instruments, any equipment identified in the DCA or IPI databases related to criticality safety shall have a 25% grace period extension for completing the required surveillance. If the required surveillance is not completed for both controls within the normal surveillance interval or the 25% grace period, missing the surveillances for both controls for the contingency shall be reportable as a DCA violation using the approved reporting process. Missing the required surveillances for both controls (i.e., the process is started up with both controls inoperable) is a DCA violation (see Action 1 below). Missing the surveillance interval for only one control is not a DCA violation, but is a reportable event.

For each inadvertent criticality scenario identified in the DCA, the DCA gives two or more controls that protect the subcritical limit. All credible criticality scenarios identified in the HB–Line DCA that involve transfer of fissile material to H–Canyon have controls to comply with the double contingency principle, and are credited for H–Canyon criticality safety. All DCA controls shall be implemented to prevent an inadvertent criticality. If it is found that one of the controls is not implemented, or that there is a failure to complete or follow an implemented control, or that operations are outside one of the identified contingencies or controls, then appropriate action shall be taken as stated in the TSR.

6.5.9.2 Selection of Criticality Prevention Safety Significant Items

The latest approved revision of the WSRC Functional Classification Procedure (WSRC Procedure Manual E7, Procedure 2.25) (Ref. 17) is used to identify the functional classification

of those structures, systems and components (e.g., instruments, equipment) identified in the NCS Program documents (specifically the DCA) which prevent or mitigate the consequences of a criticality. Using this methodology results in identifying several SSCs which prevent, detect, or mitigate the consequences of an inadvertent nuclear criticality as SS SSCs. Note that revisions to the functional classification methodology of SSCs provided in WSRC Procedure Manual E7, Procedure 2.25, are implemented on a forward fit basis; there is no requirement to reanalyze (i.e., backfit) the functional classification of existing SSCs based upon the latest approved revision of WSRC Procedure Manual E7, Procedure 2.25. The SS SSCs are included in the TSRs as ACs, DFs, or LCOs.

The primary inadvertent criticality prevention controls are the concentration and mass limits identified in the CSL Tables. The SSCs selected for criticality prevention are typically selected to ensure that the fissile mass or concentration limit is not exceeded. The DCA by definition requires two independent controls to prevent a criticality event. However, not all the DCA controls meet the criteria for inclusion in the TSRs as LCOs. DOE–STD–3009–94 (Ref. 18) provides guidance on determining what controls warrant use of LCOs. Based on the specific safety function credited, the equipment or instrumentation may be in the ACs in lieu of being included as an LCO.

Since the NIMs, used to detect an inadvertent criticality event, alarm in the H–Canyon control room, these items are classified as SS equipment and included in the TSR LCOs.

All other equipment identified in the DCA as preventing or mitigating a criticality was separated into two categories. The first category is instruments or equipment that will activate automatically without operator intervention (e.g., interlocks). The second category is equipment or instruments that require operator intervention to complete the action (e.g., temperature or liquid level alarms in which the instrument does not automatically activate). The equipment or instruments where operator intervention is required to complete the action was further divided into two sub–groups. The first group included those that require an immediate response from the operator to prevent or mitigate a criticality event. An example is the neutron monitors before the interlocks were installed. The other sub–group of operator intervention required instruments will be those for which an immediate or rapid operator response is not required to prevent or mitigate the consequences of a criticality. These instruments are those for which there is a long response time before a criticality event can occur even if the alarm is activated. Examples include liquid level instruments and temperature instruments.

For those instruments and equipment that require operator intervention, the following three general questions were used to determine if these SSCs should be designated as SS.

1. Is rapid operator action or intervention required to prevent a criticality?

2. Is this the last line of defense against the inadvertent criticality event?

3. Would the system be designed with automatic interlocks if it was designed as a “new” system now?

Equipment and instruments that activate automatically (e.g., interlocks), are DCA defenses of a criticality scenario (e.g., liquid level instrumentation), or are used to indicate an inadvertent criticality or a significant degradation of the physical barrier that prevents an uncontrolled release of radioactive material. These defenses are functionally classified as SS equipment and included in the TSRs. Additionally the SSCs that support an AC (i.e., provides an enabling function for an operator action) and are common to both administrative Double Contingency defenses for a given initiating event shall also be designated as SS and are included in the TSRs.

The equipment or instruments that do not require immediate or rapid operator intervention to prevent a criticality are not classified as SS equipment but are identified in the DCA. Maintenance and surveillance activities (e.g., system alignment) will be subject to independent verification conducted in accordance with the associated requirements contained in Reference 11. In addition, calibration and surveillance intervals will be to the SS programmatic requirements. Design Authority and Cognizant Quality Function review and approval is required for maintenance work packages and surveillance testing packages. These instruments and equipment will typically be classified as General Service (GS)–Criticality equipment per the existing WSRC functional classification guidance. These instruments and equipment will be operated and maintained per the appropriate requirements for criticality equipment as identified in References 6 and 11.

Equipment, which through passive features has been designed to be critically safe (e.g., geometrically safe tanks and vessels, storage racks, and shipping and storage containers), will be designated as SS DFs. This equipment will appear in the DF section of the TSR (i.e., Appendix B) or other DSA documents as necessary.

6.5.9.3 Facility Modifications and Nuclear Incident Monitor Bell Audibility

The 12–Rad zone analysis for H–Canyon is summarized in Reference 40. The normal engineering review process for facility modifications and other activities includes assurance that the function of safety systems, including NIMs, is not adversely impacted. The following guidance is provided to show that the function of the NIM system includes a sufficient audible or visual alarm signal throughout the 12–Rad zones, and to ensure that enough information is given to appropriately identify those modifications and activities that could affect bell audibility. No additional review documentation of bell audibility, beyond that generated by the normal engineering review process, is required.

The function of the NIM system as defined in the Nuclear Criticality Safety Manual, SCD–3, is to be able to detect a criticality accident and to "warn personnel to leave the area so as to reduce their radiation exposure." The warning function is provided by the NIM bells or by an approved alternative signal method (e.g., visible red strobe lights). However, the ability of personnel to hear the bell or see a visual alternative in a particular location can be affected by changes or activities in the facility that have no direct association with either the bell itself or the strobe light. In reviewing any activity for its impact on NIM function, the NIM bell function must be considered to include not only that the bell rings, but that the bell sound can be clearly distinguished above other noise in the facility and through any barriers that may exist between the bell and the facility worker. Similarly, the NIM system alternate signal function must be

considered to produce an accepted alternate signal that can be clearly distinguished as described above. Alternatives to bells must be similarly evaluated. Defining the function this way means that NIM system operability shall be determined by the worker's ability to receive the alarm rather than the system's ability to generate the alarm. This sets the NIM system apart from other safety systems and is the basis for specifying additional review guidance.

Examples of facility modifications and activities that could affect NIM bell audibility include, but are not limited to the following:

- Replacement of any air sampler or addition of a new type of air samplers, relocation of air samplers, replacement of a motor air pump with a type not previously evaluated for noise, or modification or removal of acoustic covers

- Operation of continuously running portable motorized equipment such as portable compressors or blowers

- Work which adds requirements for ear plugs, breathing air, containment huts, power respirators or other barriers to audibility that are not normally present in the work location

- Structural modifications that add potential barriers to sound travel, such as the addition of walls, doors, or shielding, replacing a standard door with a fire or security door, replacing a louvered door with a solid door, etc.

These examples are provided to demonstrate the types of activities that do not have any obvious association with the NIM system, yet could affect NIM bell audibility or the alternate signal visibility. It is not intended that any special reviews of these activities be generated. However, if the normal review process identifies a possible effect on NIM bell audibility, it is expected that further review and evaluation will be performed and documented as necessary and provisions made for a standby person if satisfactory audibility cannot be achieved. The examples are given for audible bells, but impacts on the red strobe lights and any other approved alternatives must also be considered.

Alternative protective measures must be implemented for personnel in any area that falls within the H–Canyon or HB–Line 12–Rad zones, but for which audible bells or an approved alternative (strobe lights) are not operational, when operations requiring NIM coverage are being conducted. Approved protective measures include posting the area as a restricted access area for NIM bell audibility, and to maintain communication between personnel in the restricted area and one or more monitoring personnel. The monitoring person(s) must be stationed in an area where NIM alarms are audible/visible, and must be specifically designated as a monitor so that their first response in the event of NIM activation is to alert the personnel in the restricted area. The monitoring person may have other duties provided they do not interfere with the ability to provide an immediate alert. More permanent protective measures may also be adopted including painted floor markings or locks on doors. Protective measures described in this paragraph are not required for an area if the operating status does not require NIM coverage in the 12–Rad zone affecting that area.

Alternatively, there are areas within H–Canyon that fall within a 12–Rad zone for which it is impossible or impractical to install a NIM unit. Personnel access to these areas is usually restricted and personnel occupancy is limited (e.g., to personnel passing through the area). Access to areas may be restricted to "Areas Not Normally Occupied," as defined in N–TRT–G–00001 (Ref. 39). Areas so designated may only be occupied for certain periods of time, and personnel granted access may be required to wear special alarming dosimeters, capable of detecting a criticality. In general, for those areas in which it is impossible or impractical to install a NIM unit, permanent or temporary protective measures as described above may be implemented to limit personnel exposure to ionizing radiation. For example, in the Section 15 Personnel Tunnel, the 12–Rad zone from a criticality in the Section 15H or 15W Sumps extends into the Section 15 Personnel Tunnel. The linear distance that the 12–Rad zone extends along the tunnel floor is estimated to be 32 feet (16 feet on each side of the sump centerline). NMS–SDG–2000–00003 (Ref. 19) determined that programmatic controls were an effective means of preventing exposing anyone in the Section 15 Personnel Tunnel to a 12–Rad zone. These programmatic controls are described below. Personnel protection in this area, where a NIM alarm is not available, may be achieved by painted floor markings and posting signs or placards warning personnel not to loiter in the painted area or other equivalent administrative markings or measures. These signs or placards should identify the painted area as a potential 12–Rad zone from a criticality in a specific location (e.g., Section 15W Sump), a process, or a specific process vessel (e.g., Tank 12.1), as applicable. Additionally, the signs should include instructions for avoiding or crossing the potential 12–Rad zone. For example, a sign that allows crossing a potential 12–Rad zone (e.g., Section 15 Personnel Tunnel under the 15W Sump), should include instructions such as:

1. Do not stop in the painted area.

2. WALK rapidly through the painted areas.

3. The estimated crossing time for the painted areas at a normal walking pace is X (insert time for X) seconds (time to be applied to the actual length of the painted zone). For example, for a 32–foot zone in the Section 15 Personnel Tunnel, X is expected to be approximately 12 seconds.

4. Notify supervision if work must be conducted in the painted areas. This will ensure appropriate actions are taken to minimize the potential for a criticality in this area during the duration of the planned work activities.

The USQ process shall be applied to any proposed revision to the sign wording or to removal of the signs or painted areas. If the USQ process shows that the potential criticality event has been eliminated or is BEU, or the potential for a 12–Rad exposure has been removed, the signs, placards, and painted areas may be removed or modified, just like any other programmatic control, without any additional actions (e.g., DSA changes). A good practice will be to notify DOE–SR that the potential 12–Rad zone has been eliminated and the actions that were taken. Since these compensatory measures are normally included in the Radiation Control or Configuration Management Programs and cannot be easily changed, they are sufficient to limit personnel exposure within the conservatively calculated 12–Rad zones. As noted above, if the

facility operational status does not require NIM coverage, these protective measures are not required.

Some portions of the H–Canyon facility fall within the 12–Rad evacuation zones for potential criticality locations in HB–Line. Audible or visible signals are provided for most of these areas. However, for four areas, audible or visible signals are not available and their installation is not warranted. One area involves part of Section 4 of the Hot Crane walkway within 6 feet east of room 410N in HB–Line. The area of the Hot Crane walkway, which falls within the 12–Rad zone for a potential criticality in the HB–Line Scrap Recovery Facility, is designated by painted floor markings. Personnel are to remain outside of the marked area or cross it without stopping. The second area involves the new Hot and Warm Canyon crane cabs while personnel are in the crane cabs only. The new Hot and Warm Canyon crane cabs will be posted as a restricted access area for NIM audibility (or visibility) and communications will be continuously maintained between personnel in the new Hot and Warm Canyon crane cabs and one or more monitoring personnel as indicated above. The third area involves Rooms 469 and 470, the Crane Maintenance Shielding Door Maintenance Room and Equipment Rooms for HB–Line. These areas shall be posted as a restricted access area for NIM audibility (or visibility) and locked to prevent inadvertent personnel entrance. When work must be conducted in these rooms, communications will be continuously maintained between the workers and the monitoring personnel as indicated above. The fourth area involves Section 4 of the 1st Level between C and F walls (i.e., the vicinity of the change room and Rad Con office area), at 10 feet above the floor and higher. Because personnel standing on the floor of this area are outside of the 12–Rad zone, no protective measures are required. Any long term activity involving personnel access 10 feet or more above the floor on 1st Level at Section 4, between C and F walls, requires a USQE to assess the need for protective measures to mitigate exposure from a potential criticality in HB–Line.

6.5.10 NUCLEAR CRITICALITY SAFETY EVALUATIONS AND DOUBLE CONTINGENCY ANALYSES

NCSEs are the base documents for nuclear criticality safety control. Processes must be shown to be subcritical under all normal and credible abnormal operating conditions. NCSEs are used to evaluate new processes or process changes before any fissile material is processed, stored, or shipped and document the calculations and judgments used in determining that nuclear criticality safety is ensured. NCSEs are used to develop or document the CSLs that are applied to the H–Canyon Process operations.

The H–Canyon DCA (Ref. 20) was completed in December 1996. The DCA is contained in document N–NCS–H–00037. The DCA was revised in March 1997 to include additional information on the basis for the selection of the DCA controls and the specific limits that are the basis for nuclear criticality in H–Canyon. The DCA was revised in June 1997 by document number N–DCF–H–00004 to address criticality initiating event concerns developed during the ORR for the H–Canyon Phase I startup and by document number N–DCF–H–00005 to delete references to Hydroxylamine Nitrate (HAN) in the DCA. A major revision to the DCA was completed in January 1998 and the DCA was issued as Revision 2. Several revisions to Revision 2 were made and incorporated into the DCA to support H–Canyon Operations. A major revision

to the DCA was completed in April 2000 to support the planned operations, and the DCA was issued as Revision 3. The DCA was extensively revised to support H–Canyon operations for the start up of HB–Line Phase II. The fourth revision was issued as a DSA implementing document in 2001.

Revision 5 was another major revision to the document incorporating proposed alterations to the facility, equipment, and activities to accommodate the HEU Blend Down Process and seven Design Change Forms. Revision 6 was primarily concerned with changes to sections on product storage and the sumps. Numerous changes for revised HEU Blend Down Process operational flows following additional analyses necessitated Revision 7.

Revision 8 addresses required facility and process changes to accommodate processing of neptunium or laboratory sample returns. The low fissile material mass and normal contamination controls preclude any credible criticality scenarios for the laboratory sample return processing. This revision revises the previous administrative weir blockage control with an engineered control for the 1C Bank Mixer–Settler. Scenarios for the GPE, ARU, and EUS Tank receipts were deleted due to incredibility.

Revision 9 of the DCA contains a revision of the LEU Loading Station NCSE (Appendix C, which will no longer be issued as a separate document). This change incorporates a new Heating, Ventilation, and Air Conditioning system for the loading station. In addition, various minor process and editorial changes are incorporated. Addition of a new Head End dissolver receipt tank (7.4) and deletion of Tank 8.2 as a potential Head End receipt tank were also incorporated. Tank 8.2 can now only be in the HAW system as a feed tank for Neutralization Tank 8.4 (accomplished in a previous revision). Three obsolete scenarios were deleted D.9-1, D.6-5, and D.6-6. Another HAW change route the Head End Evaporator overheads Tank 11.4 to Tank 9.3 instead of upstream of HAW Evaporator 9.2E. The last two are associated with Tank 8.2 being in HAW, with no switches between Head End and HAW. Scenario D.9-1 considered FS transfers from F-Area in dumpsters (obsolete process F-Canyon is shutdown). The caustic addition route for Tank 8.6 was removed due to ventilation project DCF construction activities. Dissolving scenarios for irradiated Mk22 and Mk16B fuel types were deleted, because these materials have already been processed in H-Canyon. Revision 9 also incorporates Design Change Forms N-DCF-H-00043 and N-DCF-H-00045.

Revision 10 incorporates upgrades for the LAW system, sumps and OF A-Line. Revision 10 also incorporates Design Change Forms N-DCF-H-00046 and N-DCF-H-00048.

Revision 11 incorporates upgrades for the Dissolving, Head End and First Cycle. Scenarios for fissile evaporators (11.3E, 17.2E and 17.6E) also had the defenses made more consistent, and a more detailed CMF discussion was added.

Revision 12 incorporates a minor change to the Evaporator 17.6E defenses. In addition, changes in Section D.1 address discard of plutonium material dissolved in H-Canyon. A route from OF Tanks EUS, B3-1 and B3-2 to either Canyon Tanks 18.1 or 18.7 is also allowed for this revision. This allows EUS Tank solution to bypass evaporation in Evaporator 17.6E.

Revision 13 includes an attachment to Appendix C for completeness. No technical changes were made from Revision 12.

Revision 14 incorporates changes to HAW to utilize Tank 8.4 with no cooling (coil leaks blocked off). Tank 8.2 will now be the neutralization tank, while Tank 8.4 will be the Neutralization Feed Tank. The route for adding caustic to 8.4 was also removed. Scenario#D.6-2 was deleted because Head End cakes are still received in Tank 8.4, which is now the neutralization feed tank for the HAW system, and only receives acid solutions, with no neutralization potential (no caustic routes to Tank 8.4).

Revision 15 incorporates a change for routing PuCS material dissolved in 6.1D to the EUS Tank instead of into the Head End system for blending. These changes mainly appear in Appendix C. Also, changes for Tank 8.8 receipt of HB-Line neptunium were incorporated to be consistent with the HB-Line DCA. Changes to allow use of Tank 12.1 as a First Cycle Feed Tank were also incorporated.

6.5.11 NUCLEAR MATERIAL CONTROL AND ACCOUNTABILITY

The WSRC Nuclear Material Control and Accountability program is described in the WSRC Procedure Manual 14Q, “Material Control and Accountability” (Ref. 21). Responsibilities for the control and accountability practices related to special nuclear material are in this document. The operational implementation of the technical practices and measurement control used to determine the quantities of special nuclear material present in any location in H–Canyon and OF–H is contained in procedures, (e.g., procedures such as Valving and Pulling Accountability Samples for 211–H, H-Canyon and 211–H Bimonthly Inventory Instructions, and Determining the Physical Inventory). Other procedures provide instructions for sampling and inventorying a specific tank or process. Standard Operating Procedure (SOP), Control of Tank Calibration Charts, contains instructions on the proper use of the tank control charts used for accountability purposes in H–Canyon and OF–H. Changes in the H–Canyon and OF–H accountability instrumentation are documented for the Material Balance Area Custodian through the IPI Change Request procedure. The H-Canyon and 211–H Bimonthly Inventory Instructions procedure contains criteria for comparison of lab and instrumentation measurements of tank density. Other procedures important to the fissile material measurement program include the Accountability Supervisor Checklist, Formulas for Accountability Calculations, and Reconciling Physical Inventory Report and the Daily Reports.

6.5.12 CONFIGURATION CONTROL

A Configuration Control Program is defined in the WSRC Configuration Management Manual, WSRC Procedure Manual 7E (Ref. 22), and the WSRC Engineering Manual, WSRC Procedure Manual 1E (Ref. 23). Configuration control in H–Canyon is managed by the H–Canyon Facility Configuration Management Implementation Plan, WSRC–RP–95–1000 (Ref. 24). The Implementation Plan:

- Identifies and documents the technical baseline of safety related structures, systems, components, and computer software
- Ensures technical baseline changes are properly developed, assessed, approved, issued, and implemented through the use of the following:
  - Change Control Review Boards
  - Setpoint control
  - Design control (e.g., ventilation system screen mesh size)
  - Software control
  - Technical review and approval process, including performance of a USQ screening/evaluation and review of environmental documentation
  - Document control
  - Verification and acceptance process
  - Compliance auditing
- Maintains a system for recording, safeguarding, and indicating the status of technical baseline documentation.

DFs, listed in Tables 8.4–1, 8.4–2, and 8.4–3 are passive devices or component features of SSCs which, by their nature or characteristics (e.g., non–combustible construction material such as concrete or carbon/stainless steel) are adequately protected by listing in this SAR. Configuration Management Program documents such as PM Profiles or Key Document Lists are not relevant to these DFs.

6.5.13 INSTALLED PROCESS INSTRUMENTATION

IPI is identified and programmatically controlled in accordance with Procedure 12–2, "Control of Installed Process Instrumentation," in WSRC Procedure Manual 1Q (Ref. 25). This procedure is applicable to instrumentation used to monitor process variables (such as level or temperature) necessary to comply with the TSR and DCA requirements. Controls include the following:

- Traceability of TSR and DCA related IPI items
- Calibration frequencies for TSR and DCA related IPI items
- Evaluation of TSR and DCA IPI items outside of calibration tolerances

6.5.14 ENVIRONMENTAL COMPLIANCE PROGRAM

Facility and site workers and the public are protected from normal operational releases and exposures as well as postulated accidental hazardous material releases through the facility Environmental Compliance Program, described in the WSRC Environmental Compliance Program Manual, WSRC Procedure Manual 3Q (Ref. 26). WSRC Procedure Manual 3Q is structured to comply with federal and state environmental regulations, and contains applicable administrative procedures, training requirements, and physical controls to ensure an effective environmental compliance program.

H–Canyon operations comply with applicable state and federal permits and regulations. All liquid discharges to the environment are directed to permitted National Pollutant Discharge Elimination System outfalls. These outfalls are sampled monthly for the official compliance sample. Liquid waste is sent to the Effluent Treatment Facility or the H–Area Tank Farm. Both of these facilities are permitted by the state as wastewater treatment facilities.

Solid waste is characterized when generated. Final disposal of the waste is in the appropriate Waste Management facilities per the current guides and regulations.

The state of South Carolina issues permits that contain the nitrous oxide release levels. National Emission Standard for Hazardous Air Pollutants requirements establish guidelines for monitoring radioactive material releases. All radioactive releases are less than the DOE and Environmental Protection Agency standard for public doses at the site boundary.

6.5.15 INDUSTRIAL HYGIENE PROGRAM

An IH program, described in the WSRC Procedure Manual 4Q, IH Manual (Ref. 4), is implemented to comply with DOE Orders and DOE–prescribed IH standards. These standards, included in S/RID Functional Area 19 (Ref. 6), establish occupational exposures to specific chemical, physical and biological hazards. The IH program establishes essential elements to address identification, evaluation, and control of these hazards within the workplace.

6.5.16 STRUCTURAL INTEGRITY PROGRAM

In 2004, WSRC performed an evaluation to investigate the adequacy of safety system surveillance and testing for SC SSCs in all nuclear facilities. Results of this evaluation were transmitted to DOE in WSR-2004-00119 on May 28, 2004. For H Canyon, this evaluation identified an opportunity for improvement to document the Structural Integrity Program that addresses the H-Canyon building and air tunnel in Revision 6 of the SAR. This program verifies the continued ability of these robust, long lived structures to maintain their safety function. Site procedure E7 - 3.48 provides guidance for Structural Integrity Programs. The procedure calls for a Structural Integrity Coordinator for the facility; this function resides in H-Canyon Engineering.

6.6 EVENTS, CONDITIONS, CONCERN INVESTIGATIONS, AND OCCURRENCE REPORTING

The reporting requirements for events, conditions, and concerns that may involve safety, health, safeguards and security, or environmental implications are controlled by the WSRC SIRIM policy. This policy is stated in the site wide SIRIM procedure WSRC Procedure Manual 9B (Ref. 27).

WSRC policy requires that all occurrences be consistently reported to the appropriate authorities. These reports ensure that DOE, including the Office of the Secretary, and WSRC line management are kept fully informed of all events that could adversely affect the health and safety of the public or site workers; degrade the environment; or impact the operation of DOE facilities.

It is also WSRC policy to ensure the following:

- Timely identification, categorization, notification, and reporting to DOE and contractor management of all reportable occurrences
- Timely evaluation and implementation of appropriate corrective actions
- Submission of all required reports to the Occurrence Reporting and Processing System database to provide lessons learned to other DOE operations and facilities to prevent similar occurrences
- Review of reportable occurrences to assess significance, root causes, generic implications, the need for corrective actions, and lessons learned

6.7 REVIEW AND AUDIT

Comprehensive safety reviews and audits are completed to assure compliance with applicable safety codes, standards, and good safety practices. The reviews and audits fall into one of the following categories:

- Independent audits, reviews, and safety appraisal
- Criticality audits
- Internal Assessments. The internal assessment program is addressed in the Assessment Manual, WSRC Procedure Manual 12Q (Ref. 12).

6.8 TRAINING

Personnel receive initial training in the safety aspects of jobs with periodic retraining in certain areas (e.g., chemical hazards and radiation worker). Personnel also receive training in emergency actions as described in area and site emergency plans and procedures. Personnel involved in operations affecting nuclear safety are trained in their tasks prior to assuming the

responsibilities of the position. Training requirements are detailed in the appropriate administrative procedures.

Initial training, continuing training, and retraining of qualified supervisors and qualified operators are completed by formal classroom instruction and on–the–job experience. Initial operator qualification is based on a demonstrated acceptable level of competence and performance. Initial operator qualification depends on satisfactory completion of comprehensive written, oral, and operating examinations; satisfactory physical condition and general health; and supervision's judgment of general qualifications.

The training program, covered in the WSRC Training and Qualification Program Manual, WSRC Procedure Manual 4B (Ref. 29), addresses the positions identified for qualification. Performance–based training is used for designing and implementing all training. Continuing training and reexamination on emergency response procedures are conducted annually and biennially for other procedures important to safe operation. Requalification is conducted biennially. The bases for initial qualification and requalification are documented. Documentation includes a copy of the most recent test results.

6.9 FACILITY OPERATING RECORDS

Records retention practices comply with SRS site wide QA and records management directives. Records are retained for periods specified by the WSRC Site wide Records Inventory and Disposition Schedule, WSRC–IM–93–0060 (Ref. 30). Following are specific examples of documents retained in accordance with the H–Canyon Records Retention Schedule, as noted in Reference 30:

- Records and logs of facility operation
- Work Clearance Permits
- All reportable events or occurrences
- Records of surveillance activities, inspections, and calibrations required by the TSRs and the DCA
- Records of changes made to procedures
- Correspondence
- Shift Orders
- Records of gaseous and liquid radioactive materials released to the environment (in procedures and occurrence reports)
- Process control charts
- Process computer printouts

6.10 RADIATION PROTECTION PROGRAM

The facility Radiation Protection Program complies with the WSRC Rad Con Manual, WSRC Procedure Manual 5Q (Ref. 3) and SCD–6, the SRS ALARA Manual (Ref. 43). Exposure of WSRC employees, subcontractors, visitors, and the general public to radiological hazards are maintained well below DOE limits, with an ALARA approach to exposure management. The facility Radiation Protection Program ensures that individual and collective radiological exposures are maintained ALARA by:

- Integrating the support functions of Rad Con and IH (RC&IH) into daily operations and long term planning
- Participating in required site radiological training
- Creating barriers for and posting controlled areas
- Using RWPs
- Monitoring and controlling accumulated doses to workers
- Controlling the generation and spread of radiological contamination
- Managing radioactive material
- Monitoring and controlling radioactive effluent streams

6.11 FACILITY RADIOACTIVE AND HAZARDOUS MATERIALS SHIPPING AND RECEIVING PROGRAM

DOE Order 460.1B, Packaging and Transportation Safety, provides the requirements to ensure the safe packaging and transportation of hazardous (including radioactive) materials on SRS. The packaging and transportation requirements are generically broken down into inter–area (e.g., F–Area to H–Area) transfers and intra–area (e.g., relocation of a LEU shipment from the loading building to a staging zone within H–Area) movement requirements. To ensure compliance with the packaging and transportation requirements, H–Canyon complies with the requirements contained in WSRC Procedure Manual 19Q, WSRC Transportation Safety Manual (Ref. 31) for all onsite transfers or movements (defined as onsite transport between facilities or areas on SRS using roads within the site bounds) of hazardous or radioactive material. See the WSRC Procedure Manual 19Q for a more detailed definition of transfers (essentially inter–area) and movements (intra–area only). Movements of hazardous or radioactive material within the area covered by a facility SB or within an area fence (i.e., intra–area) are not covered by the WSRC Procedure Manual 19Q.

The facility Radioactive and Hazardous Materials Shipping and Receiving Program, as specified in the WSRC Transportation Safety Manual, WSRC Procedure Manual 19Q (Ref. 31) ensures the following for offsite shipments and onsite transfers:

- Complete documentation
- Implementation and compliance with federal and state agency requirements
- Compliance with federal and state requirements by preshipment verification
- Assurance that designated cognizant personnel are trained in radioactive and hazardous material shipping and receiving. This training is documented in accordance with Section 6.8
- Retention of programmatic and shipment records in accordance with SRS QA and records management directives.

The intent of the Radioactive and Hazardous Shipping Program is to show compliance with or equivalent safety to Department of Transportation (DOT) requirements and regulations for offsite shipments and onsite transfers or movements. Packagings used for onsite transfers must be in full compliance with WSRC Procedure Manual 19Q requirements. As a general rule, if a certified or approved package, assuming compliance with the package material content and other limits, is used for onsite transfers or movements; additional analysis or documentation is not required for the package. However, if a non–compliant package is used for radioactive material transfers, an analysis and USQE must be completed to show equivalent safety for the package. Different assessments are used for inter–area transfers and intra–area movements.

For inter–area transfers of hazardous and radioactive material, the WSRC Procedure Manual 19Q (Ref. 31) requires a safety assessment be completed. The safety analysis, an Onsite Safety Assessment (OSA), is completed by the Radioactive Material Packaging and Transportation Group in SRNL per the requirements of Procedures 4.05 and 4.06 in the WSRC Procedure Manual E7 (Ref. 17). The OSA establishes the controls and requirements for using a specific packaging or container for transferring the materials. The WSRC Procedure Manual 19Q requirements are applied to all inter–area transfers and appropriate intra–area movements (e.g., those using packagings or containers that are DOT compliant or are included in the OSA for the packaging).

For intra–area movements, either a certified or approved package must be used for the movement or the potential accidents and consequences have to be bounded by or included in the accident analysis for either the shipping or the receiving facility. For intra–area movements (e.g., within the limited area fence line), an OSA is not required if the potential accident consequences are bounded by the shipping or receiving facility accident analyses. A USQE must be completed to show that the radioactive material movement consequences are within the analyzed accident conditions. Additional controls, evaluations, or analyses are not required when using DOT or OSA analyzed packages or containers for intra–area movements. When a shipping package or container is used for intra–area movements that is not DOT compliant or has not had an OSA completed on it, additional analysis or evaluations (e.g., accident analysis, technical report, or USQE) shall be completed and the appropriate controls shall be applied to ensure safety prior to moving the material.

The evaluation for intra–area movements of hazardous or radioactive materials should ensure that any potential radioactive material releases are bounded by or are included in the facility DSA. Controls for the intra–area movement of materials may include the following:

- Appropriate packaging for the material.
- Vehicle driver has an appropriate driver's license for the material to be moved and the vehicle to be used (e.g., a commercial driver's license).
- The transfer or movement vehicle is qualified for onsite transfers or movements of radioactive materials.
- The speed of the vehicle.
- Appropriate emergency communications and emergency response equipment.
- Specific transportation only type accidents are evaluated. Some examples include vehicle crashes and vehicle fires (e.g., ignition sources, fuel sources, and duration).
- Emergency Response times should be considered.
- The evaluation should include a comparison to similar or bounding case accidents in the facility accident analysis or those events analyzed in WSRC–RP–89–715, Rev 1. (Ref. 32).

Section 6.18 discusses the Radioactive and Hazardous Waste Management Program.

6.12 QUALITY ASSURANCE

The facility QA Program, through the site QA Program Manual, WSRC Procedure Manual 1Q, (Ref. 25) provides a graded approach to the QA requirements, and ensures the following:

- QA requirements are implemented through written procedures and instructions
- QA requirements are applied to construction, operation, maintenance, research, development, and design activities
- Appropriate and sufficient records are maintained to preserve the technical baseline documentation
- The QA program supports independent assessment requirements to determine compliance with the site QA Program

6.13 EQUIPMENT MAINTENANCE

The H–Canyon Equipment Maintenance Program is described in WSRC Procedure Manual 1Y, Conduct of Maintenance (Ref. 33), and Separations Maintenance Quality Support Procedures

Manual, WSRC Procedure Manual 1Q10–3 (Ref. 34). The Equipment Maintenance Program requires planned and systematic actions to preserve the operability, reliability and availability of facility structures, systems and components. Section 6.17 discusses the testing program that ensures equipment reliability, accuracy, and operability. The program is based on a graded approach to maintenance, and includes the following categories of maintenance activities:

- Corrective maintenance
- Modifications
- Additions
- Administrative orders
- Technical specification surveillances
- Periodic and planned maintenance
- Predictive maintenance
- Operating services
- Temporary modifications

6.14 WORK CONTROL

The Work Control program is defined in Procedure 8.20 in the Conduct of Maintenance Procedure Manual, WSRC Procedure Manual 1Y (Ref. 33). The Work Control Program provides a methodology for safely and efficiently identifying, managing, tracking and documenting maintenance activities. The Program uses an AC system that details the work process from task identification through the documentation of a completed maintenance activity. This AC system uses a graded approach to maintenance activities, and includes the following:

- Work identification
- Work item validation
- Work package preparation
- Prework review and approval
- Staging
- Scheduling
- Coordination and release
- Work order performance

- Work completion and retest
- Postwork review and documentation

6.15 CONDUCT OF OPERATIONS

The H–Canyon Conduct of Operations program implements S/RID Functional Area 9 (Ref. 6). Conduct of Operations Manual, WSRC Procedure Manual 2S (Ref. 11) is the primary source of guidance for implementing Conduct of Operations. It describes procedures for all 18 sections of conduct in DOE Order 5480.19. In addition, H–Canyon uses the following manuals:

- Employee Safety Manual, WSRC Procedure Manual 8Q (Ref. 1)
- CBU Organization and Administration Procedure Manual, WSRC Procedure Manual S–1 (Ref. 35)

6.16 PERFORMANCE INDICATORS

The following are some of the performance indicators used to ensure compliance with applicable safety goals and requirements:

- The SRS Environmental Report
- The SRS Radiological Performance Report
- The SRS Annual Safety Appraisal Reports

6.17 TESTING AND MAINTENANCE

The Testing and Maintenance Programs developed by WSRC are implemented to comply with the requirements established by the S/RID and prescribed standards. In H–Canyon, modifications may occur in which testing is required to ensure operability and configuration compliance. The WSRC Procedure Manual 1Q (Ref. 25) specifies the requirements for test control. These requirements involve performing acceptance tests, return to service tests, surveillance tests, and special tests on H–Canyon systems and subsystems.

The facility maintenance program is conducted in compliance with the WSRC Procedure Manual 1Y, Conduct of Maintenance (Ref. 33). The WSRC Procedure Manual 1Y incorporates the requirements of S/RID Functional Area 10 (Ref. 6) and specifies the policies and programs required to implement the site initial testing, in–service surveillance, and maintenance programs. The maintenance program includes requirements for post–maintenance testing, control and calibration of measuring and test equipment, and maintenance history and trending.

6.18 RADIOACTIVE AND HAZARDOUS WASTE MANAGEMENT

The facility Radioactive and Hazardous Waste Management Program implements S/RID Functional Area 16 (Ref. 4). The SRS WAC Manual, WSRC Procedure Manual 1S (Ref. 36) is the primary means for implementing the requirements and performance objectives contained in the S/RID. Each hazardous and radioactive waste generator (such as H–Canyon) that delivers waste to SRS treatment, storage, or disposal facilities is required to implement a waste certification program that is described in a waste certification plan. The H–Canyon/Outside Facilities Waste Certification Plan (Ref. 37) ensures that waste has been properly identified, segregated, packaged, and shipped to the appropriate receiving facility.

H–Canyon has developed and implemented a RWMB as required by DOE Order 435.1. The primary purpose of the RWMB is to ensure compliance with all federal, state, and local radioactive waste regulatory requirements. The RWMB, therefore, contains all the necessary requirements for transferring waste to designated disposal facilities at SRS. This includes the controls that are necessary to protect the DSA for the designated facility. For example, the WAC contained in X–SD–G–00001 (Ref. 38) ensure the DSA requirements for the HLW Tank Farm are protected.

The WSRC Procedure Manual 1S (Ref. 36) is part of the RWMB. The remaining documents in the RWMB are facility specific for the type of waste generated. Examples of H–Canyon documents specified in the RWMB include: a waste certification plan for low level and mixed – low level waste, and a waste compliance plan for liquid effluent discharges to the Effluent Treatment Facility. The documents specified in the RWMB are approved by DOE and are listed in the H–Canyon AA.

6.19 REFERENCES

1. Safety Manual. WSRC Procedure Manual 8Q, Westinghouse Savannah River Company, Aiken, SC.

2. SRS Process Safety Management Manual. WSRC–IM–90–135, Westinghouse Savannah River Company, Aiken, SC.

3. Radiological Control Manual. WSRC Procedure Manual 5Q, Westinghouse Savannah River Company, Aiken, SC.

4. Industrial Hygiene Manual. WSRC Procedure Manual 4Q, Westinghouse Savannah River Company, Aiken, SC.

5. Facility Safety Document Manual (U). WSRC Procedure Manual 11Q, Westinghouse Savannah River Company, Aiken, SC.

6. Standards/Requirement Identification Document (S/RID). WSRC–RP–94–1268, Westinghouse Savannah River Company, Aiken, SC.

7. Westinghouse Savannah River Company Management Policies. WSRC Procedure Manual 1–01, Westinghouse Savannah River Company, Aiken, SC.

8. (Deleted)

9. H–Canyon Shift Operating Crew Staffing Requirements. ADMN 221–H–6060, Westinghouse Savannah River Company, Aiken, SC.

10. Human Resources Policies, Practices, and Procedures. WSRC 5B, Westinghouse Savannah River Company, Aiken, SC.

11. Conduct of Operations Manual. WSRC Procedure Manual 2S, Procedure 5.1, "Facility Operations Organization and Administration." Westinghouse Savannah River Company, Aiken, SC.

12. Assessment Manual. WSRC Procedure Manual 12Q, Westinghouse Savannah River Company, Aiken, SC.

13. Nuclear Facility Startup Approval Process. DOE–SR Implementing Procedure 400.

14. SRS Emergency Plan/Emergency Management Program Procedures Manual. WSRC Procedure Manual 6Q, Westinghouse Savannah River Company, Aiken, SC.

15. Nuclear Criticality Safety Manual. WSRC–SCD–3, Westinghouse Savannah River Company, Aiken, SC.

16. H–Canyon Preliminary Hazards Analysis. WSRC–TR–95–0035, Rev. 1, Westinghouse Savannah River Company, Aiken, SC, June 1996.

17. Conduct of Engineering and Technical Support (U). WSRC Procedure Manual E7, Westinghouse Savannah River Company, Aiken, SC.

18. Preparation Guide for U.S. Department of Energy Nonreactor Nuclear Facility Safety Analysis Reports. DOE–STD–3009–94, U.S. Department of Energy, Washington, DC 20585, July 1994.

19. Reilly, T.A. and Williams, J.C. Evaluation Of The Nuclear Criticality Protection Requirements For Personnel In The H–Canyon Section 15 Personnel Tunnel (U). NMS–SDG–2000–00003, Westinghouse Savannah River Company, Aiken, SC, April 2000.

20. H–Canyon Double Contingency Analysis (U). N–NCS–H–0037, (Latest Revision), Westinghouse Savannah River Company, Aiken, SC.

21. Material Control and Accountability Manual. WSRC Procedure Manual 14Q, Westinghouse Savannah River Company, Aiken, SC.

22. Configuration Management Manual. WSRC Procedure Manual7E, Westinghouse Savannah River Company, Aiken, SC.

23. Engineering and Engineered Services Procedure Manual. WSRC Procedure Manual 1E, Westinghouse Savannah River Company, Aiken, SC.

24. H–Canyon Facility Configuration Implementation Plan. WSRC–RP–95–1000, Westinghouse Savannah River Company, Aiken, SC.

25. Quality Assurance Manual. WSRC Procedure Manual 1Q, Westinghouse Savannah River Company, Aiken, SC.

26. Environmental Compliance Manual. WSRC Procedure Manual 3Q, Westinghouse Savannah River Company, Aiken, SC.

27. Site Item Reportability and Issue Management (SIRIM). WSRC Procedure Manual 9B, Westinghouse Savannah River Company, Aiken, SC.

28. (Deleted)

29. WSRC Training and Qualification Program Manual. WSRC Procedure Manual 4B, Westinghouse Savannah River Company, Aiken, SC.

30. Site Records Inventory and Disposition Schedule (RIDS). WSRC–IM–93–0060, Westinghouse Savannah River Company, Aiken, SC.

31. Transportation Safety Manual. WSRC Procedure Manual 19Q, Westinghouse Savannah River Company, Aiken, SC.

32. Evaluation of Accident Risks in the Transportation of Hazardous Materials by Truck and Rail at the Savannah River Site. WSRC–RP–89–715, Rev. 1, Westinghouse Savannah River Company, Aiken, SC, September 1992.

33. Conduct of Maintenance. WSRC Procedure Manual 1Y, Westinghouse Savannah River Company, Aiken, SC.

34. Separations Maintenance Quality Support Procedures Manual. WSRC Procedure Manual 1Q10–3, Westinghouse Savannah River Company, Aiken, SC.

35. NMS&S Organization and Administration Manual. WSRC Procedure Manual S1, Westinghouse Savannah River Company, Aiken, SC.

36. Savannah River Site Waste Acceptance Criteria Manual. WSRC Procedure Manual 1S, Westinghouse Savannah River Company, Aiken, SC.

37. 221/211–H Low–Level Waste/Mixed Waste Certification Plan. NMP–SHC–94–0243, Westinghouse Savannah River Company, Aiken, SC.

38. Waste Acceptance Criteria. X–SD–G–00001, Westinghouse Savannah River Company, Aiken, SC.

39. Yates, K.R. Technical Basis for the Use of Alarming Personal Criticality Detectors to Augment Permanent Nuclear Incident Monitor (NIM) Systems in Areas Not Normally Occupied. N–TRT–G–00001, Rev 0, Westinghouse Savannah River Company, Aiken, SC, April 16 2003.

40. Bartholomay, R.W. and Reed, R.L. 12–Rad Zone Analyses of H–Canyon (Building 221–H) (U). N–NCS–H–00145, Rev 0, Westinghouse Savannah River Company, Aiken, SC, May 2003.

41. SRS Emergency Plan. WSRC–SCD–7, (Latest Revision), Westinghouse Savannah River Company, Aiken, SC.

42. Fire Protection Program. WSRC Procedure Manual 2Q, Westinghouse Savannah River Company, Aiken, SC.

43. SRS ALARA Manual. WSRC–SCD–6, Westinghouse Savannah River Company, Aiken, SC.

Table 6.1 H–Canyon and Outside Facilities H–Area Minimum Shift Crew Composition [a]

MODE	SOM	FLS	OP[c]	RCO[d]	Maint/E&I	STE[e]
Operation	1	2	10	3	1	1
Standby	1[b]	2	9	3	1	0
Maintenance	1[b]	2	9	3	1	0

SOM = Shift Operations Manager

FLS = First Line Supervisor

OP = Operator

RCO = Radiological Control Operations

Maint/E&I = Maintenance or Electrical & Instrument Personnel

STE = Shift Technical Engineer

a. During a shift, to accommodate unexpected absences of on–duty shift crew members, the shift crew composition may be one less than the minimum requirements for not more than 2 hours provided immediate action is taken to restore the shift crew composition to within the minimum requirements. This provision is not applicable at the time of shift turnover.

b. This position may be filled with a First–Line Supervisor. In the event, a FLS is fulfilling the SOM's positions or duties, the FLS cannot be fulfilling FLS duties at the same time (i.e., the FLS or SOM cannot fulfill the duties for more than a single position simultaneously). This will still require three personnel, the SOM and two First–Line Supervisors.

c. When not performing Dissolving, Head End, First Cycle, Second Uranium, Second Product Cycle, or any cold stream operations associated with these processes, the required number of Operators is reduced to 9.

d. This position may support or be supported by other facilities. Specifically the third RCO position may be supported from any facility within the H–Area Limited Area (i.e., from any facility within the H–Area boundary fence). A minimum of two RCO Inspectors shall be in direct support of H–Canyon and OF–H operations at all times and be present in the facility.

e. STE coverage is required when processing (e.g., sampling and storage are excluded) solutions containing greater than a residual (as defined in the TSRs) quantity of fissile material. When processing materials that do not contain greater than a residual quantity of fissile material, STE coverage is not required.

Table 6.2 Procedural Activities

1. Administrative Procedures, which govern:
   - Authority and responsibility for facility safe operation and shutdown
   - Equipment control (e.g., locking and tagging)
   - Procedure compliance
   - Procedure review and approval
   - Conduct of operations
   - Control of maintenance work
   - Control of modifications
2. Operating Procedures, which govern:
   - Startup, operation, and shutdown of facility systems and equipment
   - SRs
3. Maintenance Procedures, which govern:
   - Control of routine maintenance, inspection, calibration, and test activities
   - Preventive and corrective maintenance programs
4. Alarm Response Procedures, which govern:
   - Initial validation and
   - Corrective actions in response to control room alarms for safety systems
5. Procedures to define the methods for correcting abnormal facility conditions
6. Implementation of IPI Program
7. Implementation of the facility Fire Protection Program
8. Implementation of the facility Emergency Response Program, Emergency Preparedness Administrative Procedures, and Emergency Plan Implementing Procedures, for:
   - Providing technical support for drill/exercise scenario development
   - Implementing facility Emergency Response Organization training drills
   - Determining corrective actions; coordinating and tracking resolution of open area/facility emergency preparedness items
   - Implementing facility protective action drill program

Table 6.2 Procedural Activities (Continued)

9. Implementation of the Radiation Protection Program to limit materials released to the environment and to limit personnel exposure
10. Implementation of the facility QA Program
11. Implementation of the facility NCSP
12. Implementation of the IH Program

7.0 OPERATING ENVELOPE

The operating envelope for the H–Canyon and Outside Facilities H–Area is defined by the WSRC hazard and accident analyses, and is maintained through the safety management programs and the SAR requirements. Operation within this envelope is analyzed and demonstrated in the SB documents. The DSA documents are described in Section 4 of this SAR and currently address processing for Mk–22 material, recycle from HB–Line, and the current inventory of dissolved uranium, plutonium, and neptunium–237. These documents address storage and transfer operations of the plutonium and neptunium solutions stored in H–Canyon. Current plans are to process the remaining neptunium stored in H–Canyon into an oxide in HB–Line. The losses from HB-Line operations will be discarded to the HLW Tank Farm. Updates to the SAR accident analysis and the TSR controls are made as required to ensure the processing activities do not exceed the risk acceptance levels currently approved by DOE. H–Canyon will receive Pu–239 solution from HB–Line for storage and disposal. The Pu–239 solution received from HB–Line is from various legacy operations, some of which include mixed Enriched Uranium (EU) – Pu solutions and EU solutions. The Pu–239 solution received from HB–Line will be combined with the other Pu–239 solutions and will be dispositioned in H–Canyon. The EU solution will be blended in OF-H. The H–Canyon accident analysis source terms have been revised to include the increased Pu–239 material in the accident analysis.

The TSRs, along with the additional controls identified in this SAR, provide limits and controls that ensure operation within the safety envelope. Section 8 documents the ACs and requirements included in this SAR and the TSRs and the SC and/or SS SSCs and ACs and DFs credited for preventing or mitigating each dominant accident identified in the PHA.

The DCA identifies and implements controls necessary to provide at least two defenses against each credible criticality initiating event identified for the H–Canyon processes. The DCA controls provide adequate protection against an inadvertent criticality and ensure that the risk from a criticality event remains low.

For proposed activities that arise after issuance of this SAR, the USQ process will provide the mechanism for demonstrating that new initiatives remain within the operating envelope.

8.0 SAFETY EVALUATION

8.1 FACILITY CATEGORIZATION AND HAZARD IDENTIFICATION

For the H–Canyon, Outside Facilities H–Area (OF-H), and HA–Line, potential hazards to workers and the public are identified based on the quantities and types of radioactive materials and chemicals present. The H–Canyon has been classified as a Hazard Class 2 facility, using the methodology presented in DOE–STD–1027–92 (Ref. 1). Tables 8.1–1 through 8.1–6 identify types and quantities of radioactive materials and chemicals used in the facilities.

Tables 8.1–1 and 8.1–2 list the radioactive isotopes and amount of each isotope that could be present in H–Canyon or OF–H at any time with the exception of sealed radioactive sources that are engineered to pass the special form testing specified by the DOT in 49 CFR 173.469 or testing specified by American Nuclear Standards Institute (ANSI) N43.6. Sealed radioactive sources are excluded from summation of a facility's radioactive inventory. Tables 8.1–1 and 8.1–2 provide the source terms in curies/pound of solution and the isotopic curie fractions for the H–Canyon processes. Table 8.1–3 provides the overflow capacities of the H–Canyon process vessels and tanks. Table 8.1–4 provides the typical inventories of chemicals stored for use in H–Canyon. Table 8.1–5 provides the overflow capacities of the H–Canyon feed tanks on the Third Level.

Initial guidance given to WSRC was to calculate the theoretical maximum curie inventory that could be present in H–Canyon. This maximum curie inventory is 4.29E+08 Curies (Ci). The maximum curie inventory was derived from the old SAR isotopic distributions in Tables 8.1–1 and 8.1–2 and the process vessel capacities in Table 8.1–3 as described in the next paragraph. The maximum canyon and individual process inventory is based on processing Mk–22 targets produced in the SRS reactors. The maximum inventory calculations are documented in Calc–note S–CLC–H–00221 (Ref. 2). Table 8.1–1 groups the process operations rather than listing them separately. Section A.1.3.1 of Addendum 1 to this SAR indicates that the isotopic distributions given in NMP–EHA–940205, Rev. 1 (Ref. 3) were the basis for determining the original H–Canyon accident consequences. The isotopic distributions given in NMS–ETS–98–0089 (Ref. 4) are the revised source terms used in SAR Addendum 1. This Section of the addendum also provides the rationale for the process grouping given in the addendum and in this SAR. Essentially, the groupings reflect those processes with high levels of fission products (Dissolving, Head End, First Cycle, and HAW); those processes that have high levels of actinides (LAW, and the Second Product Cycles); the source terms for the stored radioactive materials (stored Np–237 and Pu–239 solutions); and the Pu–238 source term used in the FWR process. Table 8.1–1 of this SAR is identical to Table A.1.3–1 of Addendum 1. Reference 4 also provides additional source terms used in the SAR fire accident analysis. These source terms are shown in Addendum 1 Table A.1.3–2 and in Table 8.1–2 of this SAR.

The safety analysis and determination of the theoretical maximum curies in each process and the canyon total is based on a maximum curie concentration (source term) in each process stream. This maximum source term was determined by using data from Mk–22 targets with maximum reactor burn up time (megawatt–hours) which are cooled for 150 days (Ref. 3) before the fuel is

delivered to H–Canyon. The fissile material content in a typical Mk–22 target was determined along with the curies of the other isotopes (fission products) present from the reactor Shield calculations. The maximum source term given in Reference 4 is based on the same fuel (Mk–22 with a maximum burn up time) except that the fuel has cooled for a minimum of 3000 days. Therefore, most of the fission products have decayed away and the source terms and consequences for the Dissolving, Head End, First Cycle, and HAW processes have been significantly reduced. The source terms for the other processes in which actinides are the dominant source contributors will not change significantly because of the long half–lives of the actinides. For the Dissolver and Head End processes, the fissile material was scaled up to the aluminum solubility limits. To ensure that the maximum curies/pound of the dissolver or head end solution actually reflect the maximum fissile material and fission products potentially present in the process streams, all the other isotopes were scaled up using the same ratio as in the Shield calculations (e.g., fission product isotope/U–235 isotope). For the other processes, the controlling factor is the fissile isotope concentration limit for aqueous solutions of the fissile isotope (typically U–235 or Pu–239) of interest. The criticality concentration limits were developed using ANSI/American Nuclear Society (ANS) standards or internally generated criticality analyses (e.g., NCSEs). Typically, the fissile material in the solutions was scaled up to the TS or DCA limit for the U–235 isotope. The other radioisotopes present were scaled up using the same ratio used to scale up the U–235 isotope. This gave the maximum curies per pound (or kilogram) or curies per gallon (or liter) of solution. This maximum curie limit per unit volume or unit mass was multiplied by the solution specific gravity and the calculated overflow volume of the process tanks and vessels to arrive at the maximum theoretical curies in a given process. The total for all the processes was summed to obtain the theoretical curie content in the canyon. For most processes, the concentration limit creates the bounding condition. For the stored neptunium and plutonium solutions, a material inventory limit and, for the FWR Tanks or Pu–238 operations, an isotopic mass limit, were used to determine the maximum curies that could be present. This theoretical maximum curie content established the basis used in the accident analysis to provide bounding accident consequences. Since the source terms developed in References 3 and 4 are based on Mk–22 fuel, any SRS specific fuel (e.g., Mk–16B or Mk–22) will not exceed these source terms. Reference 4 also includes a source term for the bounding offsite fuel to be processed in H–Canyon. The source terms in Reference 4 show that the source term from the SRS Reactor Mk–22 fuel bounds any offsite fuel currently available to be processed in H–Canyon to include Sterling Forest Oxide fuel. The Sterling Forest Oxide fuel will normally be dissolved in Dissolver 6.1D, but can be dissolved in 6.4D. SRS reactor Mk–22 and Mk–16B fuel can be dissolved in either Dissolver 6.1D or 6.4D. Additional fuel types (e.g., High Flux Isotope Reactor [HFIR]) can be dissolved in either the smaller (8 feet by 8 feet) or the larger (12 feet by 8 feet) sized dissolver as long as they are bounded by the irradiated Mk–22 fuel analysis including all appropriate process parameters. The physical size of the dissolver is independent of its location (i.e., either size dissolver can be located in either designated position – 6.1D or 6.4D).

The maximum source term for Outside Facilities is contained in NMS–SDG–96–0043 (Ref. 5). Section A.2.3.1 of SAR Addendum 2 explains how the maximum source terms for the OF–H accident consequence analysis was developed.

The U–235 content fraction of the maximum inventory establishes H–Canyon and OF–H as Hazard Category 2 facilities in that they exceed the DOE–STD—1027–92 threshold of 700 g U–235 (criticality limit) for a process in which a criticality is credible (Ref. 1). Normal H–Canyon operation would not entail all processes operating simultaneously with maximum volumes and maximum radionuclide concentrations. However, use of this maximum inventory is consistent with the objective of hazard classification, which is to evaluate the maximum possible inventory.

Table 8.1–4 lists the chemicals used in H–Canyon, OF–H, and HA–Line and their physical forms as received on site. Table 8.1–5 provides the capacities of the chemical feed tanks located on the Third Level of the canyon. Capacities of OF–H tanks used to store bulk liquid chemicals are presented in Table 8.1–6.

The potential effect of H–Canyon, OF–H, and HA–Line radiological and chemical hazards on workers and the public can be divided into two categories: 1) effects from normal operations, and 2) the postulated effects of credible accidents.

The impact of normal operations of H–Canyon, OF–H, and HA–Line to the environment and the public is negligible. The SRS Environmental Report for 1990, WSRC–IM–91–28, Vol. 1 (Ref. 6), summarizes the impact of 1990 SRS normal operations on the offsite environment and the public. The 1990 report is referenced to reflect a recent period during which all the H–Canyon processes were being operated. The report concludes that the annual maximum dose from all SRS releases (not just H–Canyon) for all exposure pathways was 0.36 mrem, compared to the limit of 100 mrem specified in DOE Order 5400.5 (Ref. 7). Nonradiological atmospheric emissions were within applicable standards during 1990. The SRS Environmental Report for 1997 (WSRC–TR–97–00323) concludes that the annual maximum dose from all SRS releases (not just H–Canyon) for all exposure pathways was 0.18 mrem, compared to the 100 mrem limit. During 1997, some, but not all, of the H–Canyon and OF–H processes were authorized for operation by DOE–SR. Operation of all the H–Canyon and OF–H processes will not contribute significantly to the overall site annual maximum dose noted above.

The impact of potential accidents is discussed in detail in Section 8.3. The accident evaluation in this SAR is based on a PHA. The dominant accidents for the facilities, their relative frequency and consequence, and their degree of risk (i.e., scenario class) are given in Table 8.3–1.

Table 8.1–1 Maximum Radionuclide Concentrations in H–Canyon Processes

	Dissolver, Head End, 1st Cycle, & HAW	2nd Np Cycle, 2nd Pu Cycle, 2nd U Cycle, LAW, and Processing stored Np–237 and Pu–239	Storage – Np–237, Pu–239, & Pu–242	FWR
Concentration (Ci/lb)	5.7E+00	1.75E+00	2.06E+01	5.73E+01*
Isotope	Curie Fraction	Curie Fraction	Curie Fraction	Curie Fraction
Sr–90	9.31E–01			
Y–90	9.32E–01			
Ru–106	6.14E–03			
Rh–106	6.14E–03			
Ag–110	7.35E–06			
Sn–123	8.19E–10			
Sb–125	1.22E–02			
Cs–134	1.15E–01			
Cs–137	2.82E+00			
Ce–144	1.27E–02			
Pr–144	1.27E–02			
Pm–147	5.14E–01			
Eu–155	1.89E–02			
U–234	2.01E–04	5.68E–05		
U–235	1.74E–06	8.29E–07		
U–236	5.55E–05	1.26E–05		
U–238	1.49E–07	3.68E–08		
Np–237	3.77E–05	4.92E–02		
Pa–233	0.00E+00	4.92E–02		
Pu–238	1.63E–01	1.63E+00	1.33E+00	5.64E+01
Pu–239	7.84E–04	1.15E–03	3.76E–03	3.79E–02
Pu–240	7.82E–04	7.23E–04	2.16E–01	2.01E–02
Pu–241	1.44E–01	1.63E–02	1.83E+01	8.38E–01
Pu–242	2.54E–06	7.40E–07	1.37E–02	2.69E–05
Am–241	5.88E–03	6.69E–04	7.49E–01	3.44E–02
TOTAL	**5.70E+00**	**1.75E+00**	**2.06E+01**	**5.73E+01**

* Based on 10 g/l product stream. Source term is limited to 5 kg Pu–238 in the FWR process.

Table 8.1–2 Maximum Radionuclide Concentration for Fire Accident Analysis for H–Canyon Solvent and Resin Column Loading, from Safety Analysis Report Addendum 1

	1st Cycle Solvent	2nd Np Cycle, 2nd U Cycle Solvent	Pu–238 Resin
	9.56E–04 Ci/lb	2.99E–03 Ci/lb	1.29E+04 Ci
Isotope	Maximum Curie Content	Maximum Curie Content	Maximum Curie Content
Sr–90	9.95E–05		
Y–90	9.95E–05		
Ru–106	6.55E–07		
RH–106	6.55E–07		
Ag–110	7.48E–10		
Sb–125	1.30E–06		
Cs–134	1.23E–05		
Cs–137	3.00E–04		
Ce–144	1.35E–06		
Pr–144	1.35E–06		
Pm–147	5.47E–05		
Eu–155	2.01E–06		
U–234	2.14E–04	2.66E–06	
U–235	1.89E–06	2.30E–08	
U–236	5.91E–05	7.34E–07	
U–238	1.59E–07	1.98E–09	
Np–237	3.98E–05	2.99E–03	
Pu–238	3.51E–05		1.27E+04
Pu–239	1.69E–07		9.00E+00
Pu–240	1.69E–07		4.99E+00
Pu–241	3.10E–05		1.88E+02
Pu–242	5.47E–10		0.00E+00
Am–241	1.27E–06		7.72E+00
Total	**9.56E–04**	**2.99E–03**	**1.29E+04**

Table 8.1–3 H–Canyon Vessel Capacities

Unit Operation	Vessel ID.	Overflow Capacity (lb of H_2O)
Dissolving (Hot Canyon) Max. Concentration: 5.7 Ci/lb Max. sp gr: 1.4	6.1D 6.4D 7.4 8.3	22,159 45,200 21,256 45,943
Head End (Hot Canyon) Max. Concentration: 5.7 Ci/lb Max. sp gr: 1.4	10.2 10.3C 10.4 11.2 11.3E 11.4	46,700 1,063 46,554 46,455 21,728 30,060
Solvent Extraction – 1st Cycle (Hot Canyon) Max. Concentration: 5.7 Ci/lb Max. sp gr: 1.4	12.2 12.3 12.4 13.1M 13.3 13.4M 14.2 14.3M 15.1 18.4	21,268 46,747 8,891 2,550 8,545 2,550 20,910 8,030 30,071 71,753
HAW (Hot Canyon) Max. Concentration: 5.7 Ci/lb Max. sp gr: 1.4	8.1 8.2 8.4 9.1E 9.2E 9.3 9.4	46,332 21,089 30,180 21,935 21,650 29,913 21,457

Table 8.1–3 H–Canyon Vessel Capacities (Continued)

Unit Operation	Vessel ID	Overflow Capacity (lb of H_2O)
Rerun (Hot Canyon)	15.2	30,058
Canyon Sump Receipt	15.3	46,638
Product Recovery	16.1	****
Waste Evaporation and Disposal	16.2	****
Max. Concentration: 57.3 Ci/lb	17.1	30,093
Max. sp gr: 1.4	18.2	29,980
	10.1	30,058
FWR (Hot Canyon)	5.2	11,560
Max. Concentration: 57.3 Ci/lb	5.4	30,070
Max. sp gr: 1.1	7.3–1	1,869
	16.1	8,545
	16.1–2	1,592
	16.2	30,054
	16.3	85,471
	16.3–1	RC–16 Resin col.
	16.4	73,700
U/Np/Pu Storage (Hot Canyon)	11.1	30,089
Max .Concentration: 20.6 Ci/lb	12.1	46,455
Max. sp gr: 1.2	16.3	****
	16.4	****
	18.3	84,800

**** Vessel is shared by more than one unit operation. Tank was applied to the unit operation with the largest radioisotope concentration.

Table 8.1–3 H–Canyon Vessel Capacities (Continued)

Unit Operation	Vessel ID	Overflow Capacity (lb of H_2O)
Solvent Extraction– 2nd Product Cycle (Warm Canyon) Max. Concentration: 1.75 Ci/lb Max. sp gr: 1.1	8.5 8.8 9.5 9.6 10.6M 10.8 11.5M 12.5 12.7 14.7 17.7 17.8E 18.5	**** 8,570 20,939 **** 2,550 5,288 2,550 11,995 12,010 46,627 46,874 21,836 46,806
Solvent Extraction– 2nd U Cycle (Warm Canyon) Max. Concentration: 1.75 Ci/lb Max. sp gr: 1.2	14.5 15.5M 15.7 15.8M 16.7 16.8 17.4 17.5 17.6E 17.7 18.1 18.7	46,705 8,030 20,909 2,550 11,986 46,615 46,990 29,999 21,836 **** 29,972 46,620
Solvent Recovery (Warm Canyon) Max. Concentration: 1.75 Ci/lb Max. sp gr: 1.4	12.6 12.8 13.5 13.7 13.8 14.6 14.8	45,880 46,089 45,318 30,082 44,746 29,640 31,620

**** Vessel is shared by more than one unit operation. Tank was applied to the unit operation with the largest radioisotope concentration.

Table 8.1–3 H–Canyon Vessel Capacities (Continued)

Unit Operation	Vessel ID	Overflow Capacity (lb of H_2O)
LAW (Warm Canyon) Max. Concentration: 1.75 Ci/lb Max. sp gr: 1.4	6.8E 7.5 7.6E 7.7E 8.6 8.7 9.7 9.8 10.5 11.7 11.8	21,829 46,990 21,752 21,740 21,235 46,530 34,430 21,288 46,530 30,070 46,434
Rerun, Canyon Sump Receipt, Product Recovery, Waste Evap. & Disposal (Warm Canyon) Max. Concentration: 1.75 Ci/lb Max. sp gr 1.4	16.6	30,007
Np/Pu Storage (Warm Canyon) Max. Concentration: 20.6 Ci/lb Max. sp gr: 1.2	8.5 9.6	46,936 46,093

* The theoretical overflow capacity will be verified based on the as built configuration.

Table 8.1–3 H–Canyon Vessel Capacities (Continued)

Unit Operation	Vessel ID	Overflow Capacity (lb of H_2O)
1EU Concentration Max. Concentration: 1.75 Ci/lb Max. sp gr: 1.2	15.4 17.2E 17.3	30,081 21,707 30,089
A–Line .– NU Max. Concentration: 1.75 Ci/lb Max. sp gr: 1.6	E3–1 E3–2 F1–5	48,960 49,572 138,287
A–Line .– HEU Max. Concentration: 1.75 Ci/lb Max. sp gr: 1.2	B3–1 B3–2 F1–5 E4–2 EUS	32,754 32,754 **** 267,711 1,361,943
A–Line – LEU Max. Concentration: 1.75 Ci/lb Max. sp gr: 1.2	E1–1 E1–2 F1–3 F1–4 F1–5	99,969 1,919 13,233 13,233 ****

**** Vessel is shared by more than one unit operation. Tank was applied to the unit operation with the largest radioisotope concentration.

Table 8.1–4 Typical Quantities of Chemicals Stored For Use In H–Canyon, Outside Facilities H–Area, and HA–Line Processing

Chemical	**Typical Form As Received on Site**	**Typical Quantities Stored**
Process Chemicals		
Aluminum Nitrate	Bulk liquid in tanker	46,000 lbs.
Ferrous Sulfamate	Bulk liquid	24,000 lbs.
Manganous Nitrate	Liquid in containers	8,000 lbs.
Mercury	Liquid in metal flasks	7,000 lbs.
Mercuric Nitrate	Liquid mercury is dissolved in 50% nitric acid on site.	0*
n–Paraffin	Bulk liquid	61,000 lbs.
Nitric Acid	Bulk liquid in tanker	300,000 lbs.
Boric Acid	Solid Crystals in bags	4,000 lbs
Oxalic Acid	10% by weight volume Solution in 1 liter bottles	100 lbs
Potassium Fluoride	Solid crystals in drums	500 lbs.
Potassium Permanganate	Crystals in drums	2,000 lbs.
Sodium Carbonate	Solid crystals in bags	10,000 lbs.
Sodium Hydroxide	Bulk liquid in tanker	220,000 lbs.
Sodium Nitrite	Solid crystals in bags	7,000 lbs.
TBP	Bulk liquid	70,000 lbs.
Gadolinium Nitrate	Solid crystals in drums	750 lbs

***** Generated as needed for dissolving operations.

Table 8.1–5 H–Canyon Third Level Cold Feed Tank Overflow Capacities and Chemicals Normally Used in the Tanks

Head Tank	**Capacity** (lb of H_2O)	**Chemicals Normally Used in Tank (Note: XX & XX means a solution; XX OR XX means either chemical can be in tank)**
5E	8,862	Decon Solution (12% Nitric Acid & 0.75% Potassium Permanganate)
5F	8,862	Decon Solution (2.5% Sodium Hydroxide & 5% Oxalic Acid)
6A	9,129	2.5–3.0% Boric Acid
6B	9,255	34% Aluminum Nitrate
6C	9,113	Process Water* OR 50% Nitric Acid
6D	2,345	Catalyst 4.7–5.0% Mercuric Nitrate & 47.7–50% Nitric Acid
6E	9,104	5.7–6.0% Potassium Permanganate OR 50% Nitric Acid
7A	2,495	50% Sodium Hydroxide OR Process Water
7B	9,246	Process Water
7C	9,104	Process Water (2BX)
7D	509	Process Water OR 1% Gelatin OR 50% Manganous Nitrate
7E	542	0.75% Nitric Acid
7F	542	0.75% Nitric Acid
7G	526	Process Water OR 30% Sodium Nitrite OR Gadolinium Nitrate
7H	509	Process Water OR 50% Nitric Acid OR 30% Sodium Nitrite
8A**	9,138	30% TBP & 70% n–Paraffin (2AX)
8B**	9,054	30% TBP & 70% n–Paraffin (2AX)
8C	9,280	5.4% Nitric Acid & 0.02RN Ferrous Sulfamate (FS)(2AS)
8D	9,263	5.4% Nitric Acid & 0.02RN FS (2AS)
10B	4,106	50% Sodium Hydroxide
10C	4,106	Process Water OR 50% Nitric Acid
10D	517	Process Water OR 40% Ferrous Sulfamate OR 30% Sodium Nitrite OR Manganous Nitrate
10E	501	Process Water OR 50% Nitric Acid OR 40% Ferrous Sulfamate OR 30% Sodium Nitrite
10F	3,972	Process Water OR 50% Nitric Acid OR 34% Aluminum Nitrate
10G	4,081	Process Water OR 50% Nitric Acid
10H	526	Process Water OR 40% Ferrous Sulfamate OR 30% Sodium Nitrite
11A	534	30% Sodium Nitrite OR Process Water
11B	4,056	Process Water OR 50% Nitric Acid
11C	4,089	2.5–5.0% Sodium Carbonate
11D	4,047	Process Water OR 0.75% Nitric Acid OR 50% Nitric Acid
11E	4,089	n–Paraffin
11F	4,139	TBP (Tri–Butyl Phosphate)
11G	4,081	9.3% Nitric Acid & 0.02M FS (1BX)
11H	4,106	9.3% Nitric Acid & 0.02M FS (1BX)

Table 8.1–5 H–Canyon Third Level Cold Feed Tank Overflow Capacities and Chemicals Normally Used in the Tanks (Continued)

Head Tank	**Capacity** (lb of H_2O)	**Chemicals Normally Used in Tank (Note: XX & XX means a solution; XX OR XX means either chemical can be in tank)**
12A	22,515	7.5% TBP Solvent (1AX)
12B	22,498	7.5% TBP Solvent (1AX)
12C	9,088	2.5–5.0% Sodium Carbonate
12D	4,081	0.75% Nitric Acid OR 50% Nitric Acid
12E	9,063	2.5–5.0% Sodium Carbonate
13A	4,022	Process Water OR 50% Nitric Acid
13B	9,163	7.5% TBP (1BX)
13C	9,121	7.5% TBP (1BX)
13D	526	40% Ferrous Sulfamate (1AS–FS)
13F	9,205	24% Nitric Acid (1AS)
13G	9,104	24% Nitric Acid (1AS)
14A	27,886	Process Water (1CX)
14B	27,886	Process Water (1CX)
14C	9,338	Process Water OR 50% Nitric Acid OR 40% FS and n–paraffin Solvent
14D	517	40% Ferrous Sulfamate (1DS–FS)
16A	22,373	9.3% Nitric Acid & 0.02M FS (1BX Makeup Tank)
16B	22,373	Process Water (1EX)
16C	22,331	7.5% TBP Solvent (1DX)
16D	22,289	7.5% TBP Solvent (1DX)
17A	4,097	5.5% Nitric Acid (1DS)
17B	4,114	5.5% Nitric Acid (1DS)
17C	9,188	2.5% Sodium Carbonate OR 50% Nitric Acid
17D	534	Process Water OR 50% Nitric Acid
17E	426	Process Water OR 50% Sodium Hydroxide
17F	1,794	Process Water OR 50% Nitric Acid OR 40% FS
17G	1,777	Process Water OR 40% Ferrous Sulfamate
17H	150	40% Ferrous Sulfamate
17K	79	Process Water
18A	1,477	1.57%(0.25M) Nitric Acid
18B	2,462	40% (8M) Nitric Acid and Process Water
18C	2,120	Resin in 40% (8M) Nitric Acid and Process Water OR Gadolinium Nitrate
N/A	N/A	Potassium Fluoride (10M)

* NOTE: For any applicable tank, the term "Process Water" includes recycled water.

** These tanks are physically disconnected from the Canyon tanks.

Table 8.1–6 Capacities of Tanks Used to Store Bulk Liquid Chemicals

Tank No.	Stored Chemical	Overflow Capacity (gal)
11	TBP	16,665
21	n–Paraffin	16,726
22	n–Paraffin	16,726
31	30% Aluminum Nitrate	16,395
32	64% Nitric Acid	16,515
33	50% Nitric Acid	16,515
34	50% Nitric Acid	16,529
35	50% Nitric Acid	16,529
41	50% Sodium Hydroxide	16,997
42	50% Sodium Hydroxide	16,997
43	50% Sodium Hydroxide	16,997
121	30% Sodium Nitrite	928
132	40% Ferrous Sulfamate	279
141	Boric Acid / $HN0_3$	1,103
151	24% Nitric Acid	995
161	50% Manganous Nitrate	416
171	5.7% Potassium Permanganate	1,088
191	0.75% Nitric Acid	3,357
201	48% Nitric Acid / 4.7% Mercuric Nitrate	2,102
202	5.5% Nitric Acid	2,644
203	40% Ferrous Sulfamate	5,956
222	2.5% Sodium Carbonate	5,645
503	Waste Water Hold Tank	16,413
506	Recycle Water	16,413
507	Process Water Storage	16,413
508	Process Water Storage	16,413
511	Solvent Hold Tank	10,570
606	50% Nitric Acid Recovered from ARU	16,591
607	50% Nitric Acid Recovered from ARU	16,591
608	50% Nitric Acid Recovered from ARU	16,591

8.2 HAZARD ANALYSIS AND ACCIDENT CATEGORIZATION

8.2.1 HAZARD ANALYSIS

8.2.1.1 Preliminary Hazards Analysis Method

A PHA, WSRC–TR–95–0035, completed for H–Canyon and associated facilities in April 1995, was revised in June 1996 (Ref. 8). A revision was completed in June 2003 to incorporate processing of laboratory sample returns. The H-Canyon PHA (Appendix H) was initially completed in 2000 and subsequently revised as the project matured. A revision was completed in January 2004, which incorporated the PHA for the HEU Blend Down Process as a new Appendix H. The Plutonium Contaminated Scrap Campaign was also incorporated into Appendix G. The PHA consists of three basic analytical activities: hazard identification, hazard classification, and hazard evaluation. The SAR guidance document, DOE–STD–3011–94 (Ref. 10), requires the PHA to: 1) comprehensively identify potential events, their initiators, and the dominant scenarios; 2) provide an estimate of event frequencies and consequences; and 3) present the results in a risk matrix. As directed in the SAR guidance, a PHA team of experienced facility, safety analysis, and regulatory programs representatives was responsible for making gross event frequency and consequence estimates. The estimates were based upon knowledge of the facility, process operations, and engineering judgment. Only passive DFs were credited as an event preventer or mitigator in the PHA evaluation. This methodology does not require detailed analysis and focuses on scenarios of highest risk.

The hazard analysis in this SAR was completed using the guidance in DOE–STD–3011–94 (Ref. 10), in which the consequences to the onsite worker for the PHA (Appendix H) were estimated at 600 meters from the hazardous material release point. The controls identified in the accident evaluation of this SAR ensure that the consequences to the Occupationally Exposed Person (OEP) at 640 meters are within the WSRC guidelines for onsite workers. The conclusions reached in the PHA analysis and the accident evaluation in this SAR remain valid for the offsite public and the OEP at 640 meters. To ensure consistency in the functional classification of Structures, Systems, and Components (SSCs), WSRC chose to calculate the OEP consequences at 100 meters from the radioactive material release or the plume touchdown point whichever gives the greater consequences. These consequences are reported in the accident analysis (frequency and consequence analyses) addenda to this SAR. The higher consequences associated with the 100–meter OEP do not invalidate the assumptions or controls identified in this SAR. The accident evaluation section (Section 8.3) was not revised to reflect the 100–meter OEP. Instead, it still reflects the 640–meter OEP and the offsite public as documented in the H–Canyon PHA. The SAR addenda report the consequences for the 100–meter OEP instead of the 640–meter OEP for both H–Canyon and the HEU Blend Down Project. The PHA table, Table 8.3–1, was revised.

Hazards are identified by listing energy sources and hazardous materials. Information for identifying hazards and determining their applicability to the facility was obtained from:

- Existing project, safety, and environmental documents
- Design drawings and reviews
- Test plans and studies
- Facility walk downs and equipment data, and
- Consultations with facility system or process experts

The energy sources and hazardous materials, unit operations, systems, and areas associated with H–Canyon and OF–H were identified and listed. This list divides the facility into sections such as Dissolving, Head End, solvent extraction, etc. Tables were developed identifying the energy sources and hazardous materials associated with each of these sections. The information used to develop these tables was obtained through safety documentation, facility walkdowns, and consultations with facility personnel.

A Hazards Assessment was developed to determine the accident hazard classification. The hazard classification was completed independently of the PHA. The original Hazards Assessment evaluated potential radiological and chemical hazards associated with the facility and determined the proper hazard classification based on the guidelines provided by DOE Order 5480.23 (Ref. 11), DOE–STD–1027–92 (Ref. 1), WSRC–MS–92–206 (Ref. 12), and DOE Order 5481.1B (Ref. 13). The latest PHA revision used Consequence Levels versus Scenario Class as defined in the initial revision of the Consolidated Hazards Analysis Process (CHAP) Methodology Manual (Ref. 104).

The results of the hazard classification were provided in an Engineering Calculation prepared in accordance with the WSRC Procedure Manual E7 (Ref. 14) and were provided in Appendix F, "Hazard Evaluation Table for Lab Sample Returns," to the H–Canyon PHA (Ref. 8).

The hazard evaluation, the focal point of the PHA, provides the detailed information that allows the development of events and scenarios associated with a hazardous release and the estimation of their frequency and consequences. The hazard evaluation was performed in accordance with the SAR guidance document (Ref. 10) and WSRC Procedure Manual 11Q (Ref. 15).

Specific events (potential accident scenarios) were identified during the hazard evaluation phase. The hazard evaluation was based upon the following information, which was collected and tabulated for each event:

- Causes
- Prevention features
- Frequency

- Mitigation features
- Consequences

The final step in the hazard evaluation process was to determine the scenario class of the postulated event. The scenario class determination prioritizes accident scenarios for review or further analysis. The scenario class for each postulated event was determined by locating the event on a risk matrix based on the event consequence and frequency. Although the PHA lists active and passive DFs, ACs, and active engineered features, credit was taken only for passive DFs when "binning" events in the risk matrix. The risk matrix, as defined by the SAR guidance document, is described in Section 8.2.2.

When developing the accident consequences and frequencies, the PHA Team also considered whether the process controls or safety systems for upstream operations were effective and applicable. Since the HM–Process is considered a batch process, it was assumed that if the controls, either passive or active, failed on an upstream process that the "problem" would be detected in the upstream process before it would show up in the downstream process. Basically, all the controls, either active or passive, on the upstream processes were considered to be passive controls for the downstream process being evaluated. For example, the PHA Team determined that it was not credible to have an inadvertent criticality event in the waste system evaporator feed tanks because of the controls established on the upstream processes. In this case, the controls on the upstream processes would ensure that the material received in the evaporator feed tanks was within concentration limits. This is an example of the way in which the PHA Team considered the use of both active and passive controls in determining the frequency and consequences of downstream process accidents.

8.2.1.2 Safety Analysis Report Method

The old H–Canyon SAR (Ref. 16) and the OF–H SAR (Ref. 17) have been removed from the DSA List for H–Canyon. The description in this section is historical information that shows how the SAR was initially developed. This section describes the various SAR addenda, the purpose of the addenda, and how each addendum was developed. Since the SAR is still referenced as the basis for many of the accident scenarios and accident frequencies, the SARs shall be maintained as historical reference documents, however, they shall not be considered DSA level documents.

Reference 16 provides a historical description of the facility and equipment operation and documents the principal analyses made to determine that the facility can be operated without undue risk to the offsite public, site worker, facility worker, and the environment. It identified potential hazards and parameters affecting facility safety and determined with reasonable assurance that the facility has the capacity for preventing accidents or mitigating their effects sufficiently to preclude undue risks to the health and safety of the public and site workers. It also provided technical information needed to define the boundaries between acceptable and unacceptable conditions.

8.2.1.2.1 ADDENDUM 1, FRAME WASTE RECOVERY

This addendum to Reference 16 reevaluated the consequences of applicable SAR accidents using revised nominal source terms and estimated maximum source terms. The revised nominal source terms are based on an FWR process flowsheet value of 4 g total plutonium per liter, or about 24 Ci/lb. The revised nominal values were about 3.3 times higher than the nominals used in the H–Canyon SAR approved in 1987. Consequences for the revised nominal source terms were calculated using 4 g plutonium per liter and mean release values from the H–Canyon SAR. As in the SAR, consequences were calculated for 1) the offsite population, 2) the onsite population, and 3) a maximally exposed offsite individual. The mean accident frequencies stated in the SAR, and included as part of this addendum, remain the same. New risk values were calculated as the product of mean accident frequencies and consequences calculated using the new nominal source terms. The Addendum 1 results were superseded by the accident analysis contained in SAR Addendum 4.

8.2.1.2.2 ADDENDUM 2, PROCESSING PU–242 MARK 42 ASSEMBLIES

Accidents involving the Mk–42 assemblies were compared to accidents analyzed for the Mk–16B and/or Mk–22 assemblies in terms of consequence, frequency, and risk. The accident consequences for the Mk–42 assemblies were estimated to be 6.4 times greater than the consequences for the same accident involving Mk–16B and/or Mk–22 assemblies. The accident probabilities involving the processing of the Mk–42 assemblies were expected to be the same as those involving Mk–16B and/or Mk–22 assemblies because the operations were not changed. The accident frequency involving the Mk–42 assemblies was expected to be less than the frequency of accidents involving Mk–16B and/or Mk–22 assemblies because only 48 Mk–42 assemblies were processed. The risk involving the Mk–42 assemblies was calculated to be 1% of the total risk associated with H–Canyon operations. The processing of the Mk–42 assemblies has been completed and this addendum is no longer applicable.

8.2.1.2.3 ADDENDUM 3, UNREVIEWED SAFETY QUESTION ON STACK LINER

Addendum 3 to Reference 16 was an USQ addressing the risks of a possible collapse of the exhaust stack liner after a less than DBE. The results of this evaluation showed that the increase in total facility operating risk due to possible failure of the exhaust stack liner is less than 2%, and remains below the WSRC risk acceptance curves previously given in the WSRC Procedure Manual 9Q. Note the WSRC Procedure Manual 9Q has been superseded by the WSRC Procedure Manual 11Q (Ref. 15). Addendum 3 to Reference 16 has been superseded by the earthquake analysis included in this SAR and the accident consequences in Addendum 1 to this SAR.

8.2.1.2.4 ADDENDUM 4, FRAME WASTE RECOVERY

This addendum reevaluated the consequences of accidents analyzed in Addendum 1 to Reference 16 for operation of the FWR system. Additional analyses were performed to calculate risks for

the onsite facility worker, as well as risks for the onsite population. Revised source terms, based upon increases in the RC–16 resin column limit from 490 g to 800 g of Pu–238, and an increase from 7 g per liter to 10 g per liter total plutonium in the product stream, were used to calculate consequences for this Addendum. The operating risk results demonstrate that FWR operation poses no undue risk to the public. The operating risk is defined as the product of nominal source term consequences and the frequency associated with the nominal source term event. The accidents covered by this Addendum were plotted on the WSRC Procedure Manual 9Q risk acceptance curve to demonstrate that operation of the facility fell within the accepted risk values. The WSRC Procedure Manual 9Q has been superseded by the WSRC Procedure Manual 11Q (Ref. 15).

Risks from maximum source term events were also calculated. Consequences of maximum source term events are well defined. However, the methodology to fully estimate the frequencies of these events did not exist when the addendum was approved. Instead, the maximum upper bounds of the frequencies of these events were used to provide screening criteria against the risk acceptance curves. The risk results from maximum source term events demonstrate that operation of the FWR system in H–Canyon did not pose any undue risk to the public. The frequency values used demonstrate that the resulting risk values were acceptable based on the WSRC Procedure Manual 9Q risk acceptance curves.

An airborne release pathway was analyzed for a coil and tube failure accident. Previous analyses included only a liquid release pathway from the coil and tube failure accident. Subsequent analysis showed an airborne release pathway through the H–Area cooling tower. The bounding airborne release scenario is exclusive of the bounding liquid release scenario, because the airborne release occurs in the CCW System, while the liquid release occurs in the SCW System. The liquid and airborne release pathway results for the coil and tube failure accident are presented in this Addendum.

Revision 1 to Addendum 4 included the analysis of a hydrogen deflagration event, which was a newly considered type of maximum source term uncontrolled reaction. Addendum 4 was superseded by the analysis in SAR Addendum 6, which included the analysis for all the accidents covered in Addendum 4.

8.2.1.2.5 ADDENDUM 5, EVALUATION OF EARTHQUAKE INDUCED RESIN FIRE IN H–CANYON FRAME WASTE RECOVERY

This evaluation concluded that the earthquake induced resin fire scenario was BEU and did not increase the risk of H–Canyon FWR operations. This conclusion was based on seismic analyses and modifications to facility equipment and procedures that prevent the occurrence of an earthquake–induced resin fire. The seismic analysis shows that the ion exchange column, process vessels, and cell covers will withstand a DBE with no additional bracing required. Seismic analyses also show that, with minor additional bracing and modification to the Tank 18A flow control valve, the associated piping and Third Level ion exchange elution solution head tank will withstand a DBE. These modifications have been implemented by facility personnel. Facility personnel modified the supports for one of the Third Level head tanks and revised facility operating procedures to ensure a solution flow path from the head tank to the ion

exchange column is available and that facility personnel know to open this flow path after the DBE. The controls and DFs necessary to ensure that an earthquake induced resin fire remains a BEU event are given in this SAR. Therefore, the SAR Addendum 5 accident analysis is adequately addressed and protected in the DSA documents. All the FWR operations were completed in December 1996, and it is not planned to operate FWR in the foreseeable future.

Prior to any future startup of FWR operations, the controls necessary to ensure the earthquake induced resin fire remains a BEU event will be evaluated and verified to be implemented. (C)

8.2.1.2.6 ADDENDUM 6, ACCIDENT ANALYSIS

Addendum 6 to Reference 16 reevaluated the applicable SAR accident consequences using maximum source terms, such as the use of full coil volumes in calculations, with appropriate expected or nominal frequencies. Additionally, accident consequences were evaluated for the storage of material removed during decontamination and removal operations in the OHBL. The tabulated results demonstrate that operation of H–Canyon did not pose any undue risk to the offsite public, site worker, facility worker, or the environment. In addition, risks for the onsite site worker were added, as well as the risk acceptance curves from the WSRC Procedure Manual 9Q which are part of the facility DSA. Note: the WSRC Procedure Manual 9Q has been superseded by the WSRC Procedure Manual 11Q (Ref. 15). The accidents covered by this Addendum were plotted on risk acceptance graphs to demonstrate that operation of the facility falls beneath the accepted risk curves. The 1986 H–Canyon SAR Addendum 6 is incorporated into this SAR as Addendum 1. This was done to have the accident analysis directly coupled with the other parts of the H–Canyon SAR. With the SAR Addendum 6 accident analysis results included in this SAR, the old SAR was eliminated as a DSA document and maintained for historical reference. This reduced the number of DSA level documents for H–Canyon, improved the implementation of the DSA, and made it easier to complete the USQ process for H–Canyon and OF–H.

8.2.1.2.7 SAFETY ANALYSIS REPORT ADDENDUM 1, REVISION 0

Addendum 1 to this SAR (WSRC–SA–2001–00008) was the 1986 original SAR Addendum 6 revised to reflect a larger coil volume in the evaporator pots (a doubling of the evaporator coil volume) and revised source terms. The revised source terms will be based on SRS Reactor Fuel (Mk–22 fuel) that has been cooled (taken from the reactor) for a minimum of 3000 days. The Mk–22 fuel source terms will bound the source terms for all other SRS reactor fuels (e.g., Mk–16B), and should bound the source terms for all offsite fuels to be processed in H–Canyon. The short half–life fission products in the 3000 day cooled fuel have gone through at least seven half–lives and their dose contribution is insignificant. The revised source terms are based on a maximum concentration at a maximum vessel (to the overflow line) volume. The source terms are now based mainly on the actinides in the fuel rather than the fission products for Dissolving, Head End, First Cycle, and HAW. There should be very little difference in the source terms for the other processes, since the dominant isotopes in these processes were actinides based on the maximum solution concentration allowed by criticality controls.

In addition to the revised source terms, this revision of Addendum 1 updated the consequence analysis to the current WSRC analysis methods. These include the use of 95% meteorology, instead of the previous 99.5% meteorology, for the Maximally-exposed Offsite Individual (MOI). This change in the meteorology results in a dose (consequence) reduction of almost an order of magnitude for the offsite individual. For the onsite OEP, the maximum individual is now considered to be 100 meters from the radioactive material release point or at the point of plume touchdown as compared to the 640 meters used in the previous analyses. The OEP consequence analysis is based on a 50% meteorology and a best estimate source term. This best estimate source term means using the median Airborne Fraction (AF) and RF instead of the maximum AF/RFs used for the MOI.

Addendum 1 uses the MACCS Consequence Code. In the previous 1986 SAR Addendum 6, the MACCS Consequence Code was used also. However, the doses, from an accident in which any plutonium isotopes were released, were calculated using the plutonium oxide form of the plutonium compounds. The typical plutonium compound released from accidents in H–Canyon is a plutonium nitrate compound. The plutonium nitrate form has approximately a 50% greater dose than does the plutonium oxide form. This is primarily because plutonium nitrate dissolves more rapidly in the human body than does plutonium oxide. Because of the difference in the solubility of the two compounds, the nitrate form reaches the target organs (e.g., heart, lungs, and liver) more rapidly than the oxide form. Additionally, the nitrate form tends to remain in the human body longer than the oxide form does. Combined, these two factors cause the plutonium nitrate form to have approximately a 50% higher dose on a curie for curie basis than the plutonium oxide form. Therefore, the plutonium nitrate form of the released material is used in the accident consequence calculations in Addendum 1 of this SAR.

The source terms for Addendum 1 also include the source term from a representative offsite fuel to show that the source terms from the SRS reactor fuels bound the source terms for the offsite fuels. The consequence calculations are not repeated for the offsite fuels since the source term (material at risk) is smaller for the offsite fuels than it is for the SRS reactor fuels.

8.2.1.2.8 OUTSIDE FACILITIES H–AREA AND ENRICHED URANIUM STORAGE SAFETY ANALYSIS REPORT

The OF–H SAR (Ref. 17) analyzed the frequency and consequences for accidents associated with OF–H and the EUS Tank. This 1993 SAR demonstrated that the OF–H and EUS Tank operations did not pose any significant threat or harm to the offsite public, the co–located or facility worker, or the environment. The SAR showed the risks from OF–H operational activities were within the accepted risk limits for operation of a nuclear facility. The OF–H SAR accidents which were determined to be hazard category I or II events are included in this SAR. Therefore, the OF–H SAR was eliminated as a DSA level document, but shall be maintained for historical and reference purposes.

8.2.1.2.9 OUTSIDE FACILITIES H–AREA SAFETY ANALYSIS REPORT ADDENDUM 1, ACCIDENT ANALYSIS

Addendum 1 to the 1993 OF–H SAR (Ref. 17) evaluated the risk of storing DU (uranium with less than the natural uranium U–235 content of 0.71%) in Hanford Containers. The Hanford Containers were stored in the so called "basketball court" area of OF–H immediately north of the segregated solvent facilities. Addendum 1 evaluated the consequences of storing up to 14 Hanford Containers in this area. Addendum 1 evaluated storage of the DU not only in the Hanford Containers but also in other HA–Line tanks and the HM–Trailers. This Revision evaluated blending operations in which the DU would be blended with the High Enriched Uranium (HEU) stored in the EUS Tank and subsequent storage of the blended product in the HA–Line tanks, the HM–Trailers, and the Hanford Containers. The addendum showed the radiological accident consequences from the blending and storage operations bounded the consequences from similar accidents in the other OF–H facilities and operations. The blending and storage operation accident frequencies were not significantly different from those for the same accident in the other OF–H operations. The blending and storage operations present the bounding case and maximum expected risk for radiological operations in the OF–H and HA–Line. The OF–H SAR Addendum 1, Revision 1 is included in this SAR as Addendum 2.

8.2.1.2.10 SAFETY ANALYSIS REPORT ADDENDUM 2, REVISION 1

Addendum 2, Revision 1, to the previous BIO updated the consequences for the OF–H accidents. In addition to the previous OF–H accidents consequences, the dose from a postulated criticality accident in the OF–H sumps has been added to the accident analysis. The previous OF–H accident consequences were calculated using the AXAIR89Q Code. Revision 1 used the MACCS Consequence Code with the plutonium nitrate form of the material released. The revised accident consequences calculations use the new site standards noted above in Section 8.2.1.2.7 (e.g., 95% meteorology for the offsite individual and 50% meteorology for the onsite individual). Revision 1 to Addendum 2 of the BIO included the accident analysis for the HEU Blend Down process based on blending DU and HEU. This SAR addendum updates the previous accident analysis to include the EUS Tank in the accident analysis and to incorporate fire scenarios to include the wildland fire scenario. Additionally, to be consistent with current accident analysis methodology the chemical consequences associated with the uranium compounds were included in this SAR addendum. The OF–H accident analysis in Addendum 2 is an improvement to the accident analysis in Addendum 2 of BIO Revision 6. The OF–H accident analysis in BIO Revision 6 Addendum 2 assumed that the stored DU from F–Canyon would be used in the blending operations. Since Natural Uranium (NU) from offsite sources will be used in the blending operations, the consequence analysis was revised to include the NU in the source term also. The accident analysis has been revised as part of the HEU Blend Down Project and will support construction, startup, and operation activities in OF–H and the HEU Project.

8.2.2 ACCIDENT CATEGORIZATION

The PHA event scenarios were evaluated using a risk matrix methodology that identifies each event in terms of risk ranking or "scenario class." This methodology is described in detail in Section 8.2.1.1 – PHA Method, and is based upon guidance provided in DOE–STD–3011–94 (Ref. 10).

Scenario classes are represented by Roman numerals and are defined as shown below:

- Scenario Class I – Major
- Scenario Class II – Serious
- Scenario Class III – Marginal
- Scenario Class IV – Negligible

Scenario class is a function of frequency and consequence. The "Risk Matrix" shown on the next page is used to qualitatively assign scenario class rankings to each event. Broad frequency and consequence bins aid in comparing the relative risks of events. Specific standard frequency ranges are assigned to each bin. Consequence levels (high, medium, and low) are shown on the "Consequence Matrix." Scenario classes are identified based on offsite, onsite, and facility worker consequences using the SAR guideline.

Section 8.3 contains a summary of the results of the binning process. Consequences are identified in terms of the impact to facility workers, onsite workers, and the public, as applicable. The Scenario Class I and II accident scenarios are described in Section 8.3.2.

PHA CONSEQUENCE MATRIX

Consequence Level	Type	Offsite	Onsite (600 meters)	Facility Worker
High	Radiological	>5 rem at site boundary	>25 rem at 600 meters	Potential for prompt death
	Chemical	>ERPG–2 at site boundary	>ERPG–3 at 600 meters	Potential for prompt death
Medium	Radiological	>0.1 rem at site boundary	>0.5 rem at 600 meters	Potential for serious injury
	Chemical	Not applicable	Not applicable	Potential for serious injury
Low	Radiological	<Medium	<Medium	<Medium
	Chemical	<High	<High	<Medium

RISK MATRIX

Frequency	Consequence		
	Low	Medium	High
Anticipated (above 1.0E–02/yr)	III	I	I
Unlikely (1.0E–04 to 1.0E–02/yr)	III	II	I
Extremely Unlikely (1.0E–04 to 1.0E–06/yr)	IV	III	II

8.3 ACCIDENT ANALYSIS

8.3.1 DOMINANT ACCIDENTS

A summary of the H–Canyon operating risks, documented in the H–Canyon PHA (Ref. 8), is provided in Table 8.3–1. The "bins" selected for accidents listed in the table are based upon the PHA methodology described in Section 8.2.1.1 and the accident categorization criteria described in Section 8.2.2. Dominant PHA accidents were reevaluated, crediting ACs, active engineered controls, and other DFs, not included in the PHA. The evaluation results are summarized in Table 8.3–1. The PHA (Appendix H) evaluation results for dominant radiological and chemical events are included in Table 8.3–1. Those postulated events that exceeded the Evaluation Guidelines (EGs) used in the Appendix H of the PHA are included in the following text discussion.

The Dominant Accidents identified in the PHA as Scenario Class I or II are those having a high risk with unacceptable consequences to either the facility worker, on–site worker, or the offsite public. The Scenario Class I and II accidents were identified for additional evaluation in a more formal accident analysis than the PHA process. This additional evaluation will identify active engineered features, SSCs, or ACs necessary to prevent or mitigate the accident. These active features or ACs together with the passive features identified in the PHA are used to determine the risk (frequency and consequence) associated with the accident. The dominant accidents for H–Canyon, OF–H and HEU Blend Down are identified and described in Section 8.3.2 and are summarized in Table 8.3–2.

The hazard analysis in this SAR was completed using the guidance in DOE–STD–3011–94 (Ref. 10), in which the consequences to the onsite worker were estimated at 640 meters from the hazardous material release point. The controls identified in the accident evaluation of this SAR ensure that the consequences to the OEP at 640 are within the WSRC guidelines for onsite workers. The conclusions reached in the PHA analysis and the accident evaluation in this SAR remain valid for the offsite public and the OEP at 640 meters. To ensure consistency in the functional classification of SSC, WSRC chose to calculate the OEP consequences at 100 meters from the radioactive material release or the plume touchdown point, whichever gives the greater consequences. These consequences are reported in the accident analysis (frequency and

consequence analyses) addenda to this SAR. The higher consequences associated with the 100–meter OEP do not invalidate the assumptions or controls previously identified in the Accident Analysis Section. The accident evaluation section (Section 8.3) was not revised to reflect the 100–meter OEP. Instead, it still reflects the 640–meter OEP and the offsite public for all events: H–Canyon, OF–H and HEU Blend Down. The SAR addenda report the higher consequences for the 100–meter OEP instead of the 640–meter OEP.

Safety controls for each dominant accident are described in the subsequent text. This text also includes controls for operations not currently authorized (e.g., FWR is in a deactivated state) for historical purposes. The required controls for current and proposed missions are depicted in the subsequent Summary Table of Controls for H–Canyon and Outside Facilities H–Area Dominant Accident and Section 8.4 tables.

8.3.2 DOMINANT ACCIDENT SCENARIO DESCRIPTIONS

8.3.2.1 Loss of Containment

8.3.2.1.1 COIL AND TUBE FAILURE TO SEGREGATED AND CIRCULATED COOLING WATER RETURN SYSTEMS

The H–Canyon PHA (Ref. 8) (PHA Events DV–07, DV–09, HE–07, HE–08, SE–08, SE–09, EV–09, EV–10, IE–09, IE–14, and WD–07) considers a possible coil and tube failure in the heating and cooling coils used in H–Canyon process vessels. The failure mechanism generally starts as a pinhole leak from corrosion of the heating or cooling coil and applies to both the Segregated and the Circulated Water Return Systems. The frequency of this event was classified as Anticipated and the consequences were classified as medium, resulting in a Scenario Class I event for some processes (e.g., Dissolving, Head End, and solvent extraction). For other processes (e.g., Solvent Recovery, A–Line, ARU, and most OF–H processes) the event was classified as Anticipated with a low consequence resulting in a Scenario Class III event. The difference in the event consequences for the different processes is based on the radioisotopes and concentration of the isotopes in the solution. A major difference in the consequences can be explained by the presence or absence of the actinide isotopes, particularly Pu–238. For the Class I events, the only passive, engineered features considered to prevent the event were the coil design and the material of construction. The only passive mitigators are the retention and delaying basins on the water systems, thus the medium consequences. When the active systems and ACs are considered (described below), the consequences are reduced to low and the frequency to Unlikely for Segregated and Extremely Unlikely for the CCW Systems (Ref. 23, 130) The event becomes a Scenario Class III for the SCW System, and a Class IV for the CCW System.

8.3.2.1.1.1 Normal and Independent Cooling Water Supply

Cooling water is pumped to H–Canyon from the cooling tower reservoir (285–H) by up to three pumps operating in parallel. An additional auxiliary steam driven turbine pump, which

automatically starts if pressure decreases in the main cooling water header, is provided. These pumps discharge to a 36–inch diameter header, which splits into a 30–inch normal cooling water header and a 20–inch Independent Cooling Water (ICW) header. If cooling water pressure decreases to a preset limit, an automatic valve in the 30–inch header downstream of the 20–inch independent header branch closes to divert all available water to the independent header. This maintains a cooling water supply to essential equipment. Under normal operating conditions, the ICW header maintains positive pressure on unheated process tank coils. This minimizes the potential for the radioactive solution in the tank from entering the cooling water return system in case of a failed cooling water coil. However, under abnormal conditions, the entire cooling water system, including the ICW, could be inoperable. The ICW system is a DiD system. Although it can minimize the amount of radioactive material that enters the water systems if a leak develops, the ICW is neither recognized nor credited in the accident analysis as either a preventer or mitigator of the event. Note that in the slug and guillotine break scenarios described below, a total loss of cooling water system pressure is assumed which indicates the ICW is not credited in the accident analysis.

8.3.2.1.1.2 Circulated Cooling Water Return

H–Canyon process vessel cooling water leaves the canyon in either the Segregated or the Circulated system. The Segregated and CCW System designs are different in that the Segregated System returns to two separate delaying basins for monitoring while the Circulated Delaying Basin is serpentine.

The Circulated Return System accumulates cooling water from compressors, chillers, and canyon vessel coils that are supplied by cooling water only. The cooling water is from both the normal and ICW supply systems. The water flows through an underground header to the 281–4H monitor building, where the water is continuously monitored for alpha and beta–gamma by redundant on–line monitors. The water then flows through the 281–1H Delaying Basin to the 281–2H Pump Basin and to the 285–H Cooling Tower. Excess water overflows the cooling tower reservoir to Four Mile Creek. The remaining water is circulated back to the cooling water supply system. The 281–1H Delaying Basin provides a minimum of 22.3 minutes retention (delay) time at the maximum CCW System flow rate of 10,350 gpm. At lower flow rates, the retention time is longer. At full flow, water flows through the Delaying Basin for approximately two minutes before the automatic water monitor sampler will alarm if contamination is detected based on the time to transfer the sample to the cell. This means only twenty minutes are available to completely divert the cooling water to the ETF if the monitor detects contamination. Actions required by the high activity cooling water monitor alarm response procedure ensure that if rapid sample analysis results (completed by Rad Con) are not received within 16 minutes after receiving the initial on–line monitor alarm, the potentially contaminated water is diverted to the ETF. The 16–minute limit for receiving the rapid sample analysis results ensures that actions can be taken to divert the cooling water before the minimum basin delay time of 22.3 minutes is reached. An automatic timer has been added to the monitor system that will automatically divert the cooling water before the minimum basin delay time is reached unless the timer is manually reset by the operator. Response procedures to a high activity alarm require facility operations and radiation control personnel to respond and manually sample the cooling water to ensure that contamination is present in the cooling water. If there is radioactive material in the cooling

water above prescribed limits, the water will be diverted manually or automatically by the timer. If the contamination is below prescribed limits, the operator manually resets the timer preventing the automatic diversion of uncontaminated water. The automatic timer is a part of the Cooling Water System. The equipment list in Table 8.4–1 has been updated to include the automatic timer on the CCW System Monitors.

If both on–line monitoring systems are inoperable, operating procedures require Rad Con personnel to take and analyze grab samples of the cooling water periodically and analyze the results to determine if activity is in (or increasing in) the return water system. Rad Con sampling of the water continues until the on–line system is returned to an operable condition and verified to be working properly. The manual sampling by Rad Con personnel is considered to be as effective for a short time as are the on–line monitors in determining if activity is in the water. An alternative to manual sampling involves loss of the remote alarm function in the H-Canyon Control Room only. If the monitors are still functioning properly and only the signal to the H-Canyon Control Room is lost, then monitoring of the local alarms in the 281–4H Monitor Building is an acceptable method of ensuring that any contaminated water detected can be diverted. Upon loss of the Canyon Control Room alarm monitors, the monitors and the local monitor house alarms shall be verified to be functioning properly. Personnel shall be stationed where they can monitor the local alarms and divert any contaminated water.

8.3.2.1.1.3 Segregated Cooling Water Return

The Segregated Return System accumulates cooling water and steam condensate from canyon vessel coils that are supplied by both cooling water and steam. The cooling water is from both the normal and independent supply systems. This system is segregated from the Circulated System because of a higher potential for failure of coils that are alternately heated and cooled. SCW flows through an underground header to the 281–6H Monitor Building, where the water is monitored for alpha and beta–gamma activity by redundant on–line monitors. The water then flows into either the 281–5H East half or the 281–5H West half of the Delaying Basin where samples are taken for laboratory analysis after the basin is full and before the water is discharged to the creek. The water flowing into and out of the East and West half of the Basins is controlled by Basin Inlet and Outlet valves. These valves have (noncredited) interlocks to assure that both Inlet valves are never closed at the same time and that the Inlet and Outlet valves of the same basin (East or West) are never open at the same time. If the laboratory analysis indicates the Delaying Basin activity levels are within release guidelines, the water is released to Four Mile Creek. If contamination above discard limits is detected, the water is diverted to the ETF retention basin. The only time limit on retaining water in the segregated system delaying basin is time it will take to fill the other (East or West) half of the Delaying Basin.

As with the Circulated System, if the on–line monitors fail, Rad Con personnel take grab samples of the Segregated Return water. However, on the Segregated System these samples, like the on–line monitors, are primarily for early warning of a potential release into the Segregated System. The final decision on whether to release the water to Four Mile Creek or divert it to the ETF Retention Basin is based on the RCO analysis results of the sample taken after the Delaying Basin is full. An alternative to manual sampling involves loss of the remote alarm function in the H-Canyon Control Room only. If the monitors are still functioning properly and only the

signal to the H-Canyon Control Room is lost, then monitoring of the local alarms in the 281–6H Monitor Building is an acceptable method of ensuring that any contaminated water detected can be diverted to ETF. Upon loss of the alarm monitors in the Canyon Control Room, the monitors and the local alarms in the monitor house shall be verified to be functioning properly. Personnel must be stationed where they can monitor the local alarms so any contaminated water can be diverted.

The Segregated Basin is divided into equal East and West Basins by a central wall. The wall between the East and West Basins was a modification to the original design and the wall was simply placed in a shallow groove in the bottom of the basin. Because there were no special provisions made to seal the bottom of the wall, seepage between the East and West Basins occurs. If contamination were to be released into one of the basins, it is possible that under-wall seepage could transport some contamination to the other basin. Seepage occurring during the release of water has the potential to provide a means for contamination to be released to the creek. However, this scenario is an extension of the coil and tube slug leak scenario already analyzed in which the entire slug is released. The presence of leakage between the East and West Basins does not impact the frequency of the event since the presence of contamination would be the result of a coil or tube leak (Ref. 124). The consequence cannot exceed the whole slug release and therefore is bounded by that leak. (Ref. 125). Therefore, the leakage between the basin walls would be bounded by the release due to a slug and is less than the evaluation guidelines.

8.3.2.1.1.4 Release Pathways and Scenarios

There are two release pathways for this accident type: 1) a liquid release from the Segregated or Circulated System to Four Mile Creek, and 2) an airborne release from the CCW System Cooling Tower to the atmosphere. Because there are no onsite users of the cooling water other than for process purposes, liquid releases impact only offsite individuals. Airborne releases impact both onsite and offsite individuals.

There are two basic types of coil failures applicable to the CCW and the SCW Systems: 1) a hole in the coil, and 2) a guillotine break of the coil. In the first case (a hole in the coil), it is assumed that the cooling water flow (if present and at higher pressure) proceeds substantially across the hole, with some amount of water leaking from the coil into the tank and with the potential for in–leakage of process solution from the tank into the coil due to turbulent mixing at the hole interface. Also, in the absence of cooling water pressure, process solution may seep into the coil, eventually resulting in a slug of process solution approximately equal in volume to the volume of the coil. This slug will be pushed out into the return line when cooling water pressure is returned. In the second case (a guillotine break), the coil is completely severed, and any flow of cooling water present is deposited directly into the tank. In this case, the two release mechanisms for introducing solution into the cooling water return line are pressurization of the tank contents due to blockage of vents, and siphoning of the solution out of the tank by the return line.

The first two scenarios are solution entrainment and slug formation, and are classified in the PHA as a Scenario Class I accident, based on the Anticipated frequency category and a medium

consequence offsite. For solution entrainment, it is assumed that a small hole develops in the cooling coil, allowing turbulent mixing at the cooling water/solution interface. The release scenarios assume no credit for tank level detection because of the size of the hole. The initiating event is followed by on–line activity monitor failure or failure to divert cooling water to Waste Management. For slug formation, it is assumed that a medium–sized hole develops in the cooling coil coincident with the loss of coil pressure. This allows solution to seep into the coil, displacing the cooling water to the extent approximately equal to the submerged volume of the coil, typically about 180 liters. When the cooling water flow is restored, the process solution in the cooling coil is pushed out of the coil as a "slug" and enters the cooling water return header. This slug release scenario sequence is also followed by failure of the on–line activity monitor and failure to divert cooling water because the contamination in the water was not detected, or by detection of the contamination by the on–line sampling or manual sampling systems followed by a failure to divert the water. As a mitigator for radiation monitor failure, SCW is sampled for activity when the basin is full and before water is released to the stream. Sampling provides a means of detecting contamination of the CCW System (which feeds the Segregated Water System) in case of failure of both the SCW and CCW Monitors. An alternative to manual sampling involves loss of the remote alarm function in the H-Canyon Control Room only. If the monitors are still functioning properly and only the signal to the H-Canyon Control Room is lost, then monitoring of the local alarms in the 281–4H or the 281–6H Monitor Buildings is an acceptable method of ensuring that any contaminated water detected can be diverted. Upon loss of the alarm monitors in the Canyon Control Room, the monitors and the local monitor house(s) alarms shall be verified to be functioning properly. Personnel shall be stationed where they can monitor the local alarms and divert any contaminated water.

A continuation of the release scenarios to the SCW System involves a leaking Segregated Water Basin Outlet Valve. The Outlet Valve to Four Mile Creek can leak and release activity to the environment if there was a leak or slug release of radioactive material to the Segregated Water System. The event involves a small leak through the Outlet Valve as the Segregated Water Basin is being filled up. If activity is in the Segregated Water System, it will leak to Four Mile Creek along with the water in the basin. Note that this event is a subset or a continuation of the tube and coil failure (entrainment and slug) scenarios, or inadvertent transfer to the Segregated Water System (transfer error described in the next section). Calculation M–CLC–A–00136 (Ref. 18) determined that only a fraction of the activity that enters the Segregated Water Basin would actually be released if the Outlet Valve does leak. Calculations S–CLC–H–00581 and S–CLC–H–00584 (Ref. 19, 20) evaluated the consequences of this type leak. Since only a fraction of the water and any activity in the water which enters the Segregated Water Basin leaks out, the consequences to the offsite public would be less than the bounding case of a release of the entire slug scenario to Four Mile Creek.

Although the accident analysis for the entrainment leak, slug release or inadvertent transfer to the SCW System assumes that the valve has no leakage, there is a probability that the valve will leak at times. The TSRs require a test of valve operability to include a leak check. A positive method to visually determine or measure if the valve is leaking has not been determined. Calculations have been completed which establish a "no leak" rate of 10 gpm for the valves based on the measurement uncertainty in measuring the basin water level. This measurement uncertainty is 2 inches of water height in the basin, which equates to 2,400 gallons of water. The generic method

of determining if the valves are operable (do not leak) is to close the Outlet Valves to Four Mile Creek and then fill both halves of the basin. When the basin is full, the water height is measured and the system is allowed to sit idle for a period of about 4 hours. Then the water level is measured again. Because of wave action and other phenomena the difference in the initial and final measurements can be as much as 2 inches without any indication that water is leaking through the Outlet Valves or from the basin by other means. Since the 2–inch uncertainty measurement equates to 2,400 gallons of water in the basin and the test is conducted over a four hour period, the uncertainty measurement equates to a potential Outlet Valve leak rate of 10 gpm. Therefore, the "no leak" criteria of the Segregated Water Basin Outlet Valves to Four Mile Creek is defined to be less than or equal to 10 gpm.

The third PHA Scenario Class I event, is a tank pressurization which forces radioactive solution from the tank into the cooling coil. This situation is created when a guillotine break of the cooling coil occurs, the cooling water flow is maintained, and the vents and overflow lines on the tank are plugged. This scenario causes the tank to be pressurized by the addition of the cooling water. The tank solution is forced out the return side of the cooling coil by the pressure in the tank and the supply side of the cooling coil.

The fourth scenario identified in the PHA as a Scenario Class I accident was a siphoning of the entire contents of a tank and releasing the tank contents to the environment. The scenario envisioned in the PHA included a guillotine break of the cooling coil exacerbated by a pluggage of the cooling water return header vent lines. Additionally, the cooling water return on–line activity monitors had to fail, and a failure to divert the contaminated water to the ETF had to occur to allow a release of radioactive materials to the environment.

An analysis of a potential guillotine break of the tank cooling coils for both F & H–Canyons has been completed in EPD–SSA–94–0227 and reanalyzed in engineering calculation T–CLC–F–00022 (Ref. 21, 22). The analysis conclusion was "the postulated instantaneous cooling coil Double Ended Guillotine Break pipe–break scenario is not considered credible." Since a guillotine break of the cooling coils is a BEU event and is the initiating event for tank pressurization and for siphoning material from the tanks, the tank pressurization and siphoning scenarios postulated in the PHA are BEU event.

8.3.2.1.1.5 Preventive and Mitigative Features

For all process tanks, cooling water coil design and material of construction are a SC DF. The design and material of construction (e.g., stainless steel and inconel) of the cooling coils prevent the guillotine break of the coils. This prevents releasing the entire tank contents (e.g., pressurizing the tank or siphoning the tank contents) and limits the amount of material released to the maximum slug in the cooling coil. The controls that prevent or mitigate these events are: 1) alpha and beta–gamma monitoring devices and alarms on the CCW and the SCW Systems, 2) the use of delaying and retention basins, and 3) the use of diversion systems.

CCW System SC items that prevent or mitigate this event include the 281–4H CCW Monitors and Alarms, the automatic timer, and the 281–1H CCW Diversion Valves with the associated motor operators. The CCW Diversion Valves may be operated both electrically and manually.

Electric motor operation, which may be initiated by either the automatic timer or the process operator, is the preferred method of valve operation. Diversion to the ETF is successfully completed upon closure of the valve that ensures water flow to the cooling tower is stopped. ACs that mitigate a release to the CCW Systems are the Emergency Response Procedures for a cooling water activity monitor alarm, concentration of stored solutions are limited to a maximum of 1.0 g/l Pu–238 for high content Pu–238 solutions, and the amount (mass) of Pu–238 in any single process tank is limited to less than or equal to 5.0 kg. An SS DF is the Delaying Basin Overflow Line that drains to the ETF. This DF ensures that if the Outlet Valves are closed, potentially contaminated water will go to the ETF rather than to the environment.

An analysis of the CCW System Coil and Tube Leak in which a slug of radioactive solution is released from the FWR process to the cooling tower has been completed. The analysis, S–CLC–H–00704, Rev 1 (Ref. 23), shows that releasing a slug of highly contaminated water from a FWR cooling coil leak is a BEU event. The coil and tube slug release event is still a credible accident for all other H–Canyon processes. To make the event BEU for FWR, two additional ACs are required. The two ACs are deleted from Table 8.3–2, but identified in this section for historical information since the FWR or high content Pu–238 solutions are not authorized for operation. The ACs are: 1) pressure checking the coils after a total loss of cooling water pressure to any FWR tank, and 2) taking flow measurement readings on the ICW supply to the FWR tanks at least once per shift. Since these controls are specific to the FWR process, they will have to be implemented only for FWR or for any other high Pu–238 content solutions that are received, stored, or processed in H–Canyon. High content Pu–238 solutions are defined to be those solutions with a Pu–238 content greater than that given for the 3000 day cooled Mk–22 fuel source term in NMS–ETS–98–0089 (Ref. 4).

The tube and coil slug release for all other H–Canyon processes remains a credible event for both the CCW System and the SCW System. Addendum 1 reports the frequency and consequences for a tube and coil slug release with the maximum source term available to the onsite and offsite receptors. Additionally, the addendum reports the consequences for a much smaller release of 600 Curies of Pu–238 for the FWR and other high content Pu–238 solutions.

SCW System SC systems, which will prevent or mitigate the event, are the 281–5H Delaying Basin and the 281–5H Delaying Basin Outlet Valves. SS systems, which mitigate the event, are the 281–6H SCW Activity Monitors and Alarms and the 281–6H SCW Diversion Valves. The SCW Diversion Valves may be operated either automatically or manually. Remote electronic operation of the valve from three remote locations is a GS function. Local manual operation of the Diversion Valves is an SS function. The holdup provided by the Delaying Basin provides adequate time to operate the Diversion Valves by local manual means, if necessary. The SC AC which mitigates the release is the requirement to sample the water in the 281–5H Delaying Basin and ensure the activity levels in the sample are within the guidelines for discharging the water to the creek before the water is released. An AC that mitigates a release to the SCW System includes the Emergency Response Procedures for a cooling water activity monitor alarm. A DF which will mitigate the event is the 281–5H Delaying Basin Overflow Drains which flow directly to the ETF Retention Basin and not to the environment. The cooling coil design and material of construction is a DF, which will prevent the event by preventing a guillotine break of the cooling coils. Facility personnel initiate appropriate actions as defined in the alarm response

procedures, to mitigate releases from the cooling coils. These controls are summarized in Table 8.3–2 and in the TSRs. Water pressure in the cooling coils is maintained during operation and shutdown by the ICW system and by the CASH Air Regulator System for the vessel coils that can be heated or cooled.

Passive vents such as the vessel overflow lines, are SC DFs that serve as escape outlets for pressure or liquid buildup in the tanks. The liquid which could enter the tank from a broken steam or cooling water coil is expected to exit the vessel from the passive vent feature before the vessel can become pressurized. Because of the passive vent present on the vessels, the third scenario, pressurization of the storage tank, has been determined to be a BEU event. The DF is the tank design that requires the passive vents (especially the liquid overflow lines) to be present.

The additional engineering and ACs reduce the frequency of the slug formation event from Anticipated to Unlikely for the SCW System and from Anticipated to Extremely Unlikely for the CCW System. (Refs. 23 & 130) The consequences are reduced to low for all receptors. The event is reduced from a Scenario Class I to a Scenario Class III for the SCW System and to a Scenario Class IV for the CCW System.

The quantitative frequencies and consequences for the solution entrainment and slug formation scenarios for Tank 7.3–1 are provided in Addendum 1 to this SAR.

8.3.2.1.2 INADVERTENT TRANSFER TO EITHER THE SEGREGATED OR THE CIRCULATED COOLING WATER SYSTEM

The H–Canyon PHA (Ref. 8) (PHA Event HC–03) considers a potential inadvertent transfer of the contents of a process vessel to either the SCW or the CCW Return Systems. For all canyon processes except Solvent Recovery, the frequency of this event was classified Unlikely and the consequences were classified as high, resulting in a Scenario Class I. For Solvent Recovery, the Frequency was classified as Unlikely with the consequences classified as low resulting in a Scenario Class III event. The difference in the event consequences for the different processes is based on the radioisotopes and concentration of the isotopes in the solution. A major difference in the consequences can be explained by the presence or absence of the actinide isotopes, particularly Pu–238. In this classification, the only passive, engineered feature considered (but not credited in the analysis) as a preventer was the design of the canyon piping system. Since this event involves a radioactive material release outside the confines of the canyon walls, there are no passive engineered features available to mitigate the event consequences. When the active systems and ACs are considered (described below), the frequency of the event becomes BEU.

8.3.2.1.2.1 Release Pathways and Scenarios

This scenario postulates an inadvertent transfer of process solution to either the SCW or CCW Systems. The cause of this event is a piping error in which a flexible jumper is connected to an open, unused cooling water return line nozzle on the canyon wall. This event could result in the transfer of a large volume of process solution outside the canyon to the environment. Use of

rigid jumpers will not allow connection to the wrong nozzle because rigid jumpers are designed and manufactured to go from a specific tank connection to a specific wall nozzle location, therefore, the scenario involves making erroneous connections using only flexible jumpers.

The scenario involves making the wrong connection using a flexible jumper followed by a failure of the independent verification to notice that the jumper was connected to the wrong nozzle. The transfer is started and the radioactive material in the tank is transferred to the cooling water return system. For an unmitigated release to occur, the contaminated cooling water is not diverted to ETF. Failure to divert the contaminated cooling water results from a failure of the monitoring systems (on–line or manual sampling) or from a failure to divert the cooling water after the sampling systems detect contamination in the cooling water.

At least one event has occurred in H–Canyon in which a flexible jumper from a tank transfer line was connected to a cooling water return nozzle. Radioactive process solution was not released to the environment because the cooling water return line was blanked off outside the canyon wall. For the CCW System, a frequency analysis indicated that for the as found condition the frequency for an event in which radioactive material is actually released to the environment is 4.25E-05/year from calculation S–CLC–H–00302 (Ref. 24). The analysis identified administrative and physical controls (the "Enhanced" scenario) which reduce the frequency to less than 1.0E-06/year or to a BEU event. These controls are summarized in Table 8.3–2 and in the TSRs.

8.3.2.1.2.2 Preventive and Mitigative Features

The preventive/mitigative controls include the following:

1. Blanks or blank equivalents shall be installed on unused CCW high vertical and unused CCW horizontal return line nozzles. These blanks or blank equivalents shall be inspected every 18 months. A special dummy or other device used to prevent inadvertent connection to a canyon nozzle is the equivalent of a blank. The device must be designed such that inadvertent removal would require an error other than misidentification (i.e., a special or different size tool from that used on normal canyon jumper connectors). AC requirements ensure that the blanks have been installed outside the canyon walls on the designated nozzles. The blanking devices are controlled as SC systems.

2. Independent verification of correct connections for **ALL** flexible jumper installations and **ALL** piping route changes**.** This control is satisfied by including the requirement for independent verification in **ALL** piping change procedures. Preparation of piping change procedures is itself governed by a procedure that specifies that independent verification requirements must be incorporated.

3. The 281–1H Delaying Basin provides a minimum of 22.3 minutes retention (delay) time at the maximum CCW System flow rate of 10,350 gpm. Warnings and action steps in CCW activity response procedures ensure that diversion is initiated within 16 minutes and completed within 20 minutes of receiving a high activity alarm from the CCW System monitor, unless a Rapid Analysis result is obtained which shows that activity above diversion limits is not present.

The warnings inform the operator of the requirement for diversion within 20 minutes and of the consequences of not diverting contaminated water, and are placed in strategic locations in the procedure such as immediately prior to the first performance step.

For the SCW System, the potential transfer of an entire tank contents to the SCW System return and subsequent release to the environment was not specifically analyzed but is considered to be a BEU event based on the analysis of the CCW System. Sufficient differences exist between the SCW and CCW Systems to make an event involving the SCW much less likely. These differences are primarily in the design of the system. The CCW nozzles are on the high vertical positions above the cell covers and low horizontal nozzles below the cell covers. The SCW Return nozzles are the low vertical nozzle positions on the canyon wall below the cell covers. Since jetout jumpers discharge process solutions to horizontal nozzles, it would not be possible to attach such a jumper to a low vertical (SCW) nozzle even if it was a flex jetout jumper. To inadvertently connect a flex jumper from a high vertical nozzle or from a flex drop jumper to a SCW low vertical nozzle would require an extreme error by the crane and IV operators since this type of connection is never done. For these reasons, it is not required that the low vertical (SCW) nozzles be blanked. Another design difference is that the CCW Delaying Basin is a flow through basin while the SCW System Delaying Basin is a batch operated basin in which the SCW is held up in one half of the basin. When either half of the SCW Delaying Basin becomes full, the water is diverted to the other half. The full half is sampled to determine if any activity is present in the delaying basin water. (Note the Delaying Basin does not have to be full for the water to be released to Four Mile Creek.) If the sample indicates the water is within release guidelines, the water is released to the environment (Four Mile Creek). If activity above the release guideline limits is present, the water is diverted to the ETF Retention Basins. These factors make release from an inadvertent transfer to the SCW System a BEU event.

The fault tree (Ref. 24) assumes that there will not be any flex jetout jumpers. This assumption would prevent an inadvertent connection to a CCW horizontal nozzle. The controls discussed above to install blanks on the unused CCW horizontal is substituted for the fault tree assumption. Blanks in the unused CCW horizontal nozzles is a stronger control since it also prevents the inadvertent connection of a flex crossover jumper to a CCW horizontal nozzle.

As a general rule, all the controls that prevent or mitigate a tube and coil leak to the cooling water systems will also prevent or mitigate an inadvertent transfer to the cooling water systems. The controls to prevent or mitigate a radioactive material release from a cooling coil leak plus the blanks or blank equivalents (CCW), and the independent verification of piping route are the controls relied upon. The following paragraphs identity the major cooling water systems and controls for this event. SC mitigators of the inadvertent transfer to the CCW System include the 281–4H CCW Monitors and Alarms (remote alarms in the Canyon Control Room and the local monitor house alarms), the 281–1H CCW Diversion Valves and associated motor operators, and the Automatic Timer. The Delaying Basin is a DF that ensures that the contaminated water will be delayed long enough for operators to respond to the high activity alarms. AC mitigators include the high activity alarm response procedures and blanks on unused CCW return nozzles. A DF is the Delaying Basin Overflow Line that drains to the ETF.

The SC mitigator for an inadvertent transfer to the SCW System is the 281–5H SCW Delaying Basin. The Delaying Basin includes the Overflow Line to the ETF and the Outlet Valves on

each half of the basin. The basin is both a SC system and a DF. SS mitigators of the inadvertent transfer of the tank contents to the SCW System include the 281–6H SCW Monitors and Alarms (remote alarms in the Canyon Control Room and the local alarms in the monitor house) and the 281–6H SCW Diversion Valves. ACs include the cooling water activity response procedures and the requirement to sample the basin before releasing the contents to the creek.

Since the inadvertent transfer of canyon process vessel contents to the cooling water systems has been determined to be a BEU event with implementation of the above controls (including mass and concentration controls for Pu–238), this event is not analyzed further in this SAR.

8.3.2.2 Explosion

8.3.2.2.1 EXPLOSION — TBP–NITRIC ACID ("RED OIL") RUNAWAY REACTIONS

The H–Canyon PHA (Ref. 8) (PHA Events RR–02, EV–03, WD–04, AR–01, and HE-03) includes a possible uncontrolled runaway TBP/nitric acid reaction. The highest event frequency was classified Unlikely because of the use of 7.5% TBP by volume in most HM Processes that significantly limits the amount of TBP available for this reaction. The associated event consequences (PHA Events RR-02, EV-03, and WD-04) were classified as high, resulting in a Scenario Class I event. In this classification, the only passive, engineered feature considered was the canyon building, thus the high consequences. When the active systems and ACs are considered (described below), the consequences of the less than 3,000 pound TBP event are reduced to medium with the frequency still classified as Unlikely; the event becomes Scenario Class II. The frequency of a greater than 3,000 pound event is reduced to BEU.

The PHA (Ref. 8) indicated that a red oil event is in the Unlikely frequency category for the canyon liquid waste disposal systems, the evaporators, and the Rerun processes. The Unlikely frequency and the high accident consequences made this a Scenario Class I event. For the Head End process, the PHA identified a red oil reaction as an Extremely Unlikely event with medium consequences for a Scenario Class III event. A red oil reaction in the ARU is an Extremely Unlikely event with high consequences to the facility worker for a Scenario Class II event.

8.3.2.2.1.1 Release Pathways and Scenarios

A brief description of the chemistry of TBP/nitric acid reactions and of previous accidents involving TBP/nitric acid reactions at SRS and elsewhere is given in ECS–SSS–950007 (Ref. 25). In this accident scenario, tri–butyl phosphate (TBP) and nitric acid or TBP and uranyl nitrate are mixed and heated to the autocatalytic temperature of the TBP–nitrate reaction. The autocatalytic temperature, the temperature at which the reaction is self–sustaining, is above 130° C as determined experimentally and reported in WSRC–TR–94–059, DP–526, and WSRC–TR–2000–00427 (Ref. 112, 113, 31). To date none of the red oil reactions that have resulted in explosions originated from an unheated process vessel. All the known reactions have resulted from mixing thermally hot solutions or by applying heat to the TBP–nitrate mixture. Although called a TBP–nitric acid runaway reaction, most of the known explosions in the nuclear industry

have resulted from a mixture of uranyl nitrate and TBP rather than the more simple mixture of TBP and nitric acid. Note that in the remainder of this section, the term nitric acid is used to mean a solution of either nitric acid or uranyl nitrate since either or both of these materials may be mixed with TBP to initiate the red oil reactions and for simplicity the term "red oil" means either a mixture of uranyl nitrate and TBP or nitric acid and TBP.

As the red oil mixture is heated, the TBP starts to decompose. One mole of decomposing TBP produces three moles of the butyl radical and forms butanol. The butanol further decomposes forming hydrocarbons with lower molecular weights. These reaction products further decompose releasing significant quantities of flammable gases that cause the pressure in the vessel to increase rapidly. The increasing pressure causes the temperature to rise, releasing more reaction products, and increasing the pressure in the vessel. Although an external heat source is typically required to initiate the rapid initial reactions, at some point the reaction generates enough heat and pressure to sustain the reaction without an external heat source. This is the autocatalytic or runaway reaction initiation temperature.

In an unvented vessel, the reactions generate a very large and rapid pressure increase. This rapid pressure increase can rupture an unvented vessel releasing the volatile flammable gases into the environment. This type of pressure explosion occurred in the evaporator at the SRS TNX facility and at the Russian Tomsk facility. If an ignition source (e.g., a spark or source to heat the gases above their auto ignition temperature) is present, the gases released from the reaction will explode violently. Two types of explosions are known to have occurred from a TBP–nitrate reaction. One type is the Tomsk (mixing thermally hot solutions, although later data suggests an external steam heat source was applied to the vessel) type explosion in which the initial reaction occurred in an inadequately or improperly vented vessel resulting in an initial pressure explosion of the vessel. The gases released were subsequently ignited and created a secondary explosion extensively damaging the building. The other type of explosion is the one that occurred at SRS (denitrator process vessel contents heated with an external heat source) in which the volatile gases are released from the vessel through vents or other means. These volatile gases then explode as a primary explosion if an ignition source is present.

A red oil explosion can occur in H–Canyon or OF–H by mixing TBP and uranyl nitrate or nitric acid. The resulting mixture has to be heated above the autocatalytic temperature for the reaction to continue. For the material to be heated above the autocatalytic temperature of greater than 130° C, several controls credited in the accident analysis and many DiD features and controls have to fail. The resulting explosion releases radioactive materials and/or hazardous chemicals as airborne respirable materials. Depending upon the location of the red oil explosion, mitigators may be available to reduce the radiological consequences of the event.

There are two levels of red oil explosions considered to be significant in H–Canyon and OF–H. The first is an event involving greater than 3,000 pounds of TBP. The second is an explosion involving less than 3,000 pounds of TBP. A structural analysis, EPD–SE–94–007:63 (Ref. 114), of the canyon has shown that the blast effects of a red oil explosion involving greater than 3,000 pounds of TBP that occurs inside the canyon can cause significant structural damage, if not a complete collapse of the canyon building resulting in an unfiltered ground level release of radioactive material. Because of the potential damage to the canyon structure, controls are established to ensure that a red oil explosion with greater than 3,000 pounds of TBP is a BEU

event. For an explosion involving less than 3,000 pounds of TBP inside the canyon, there is significant equipment damage followed by an airborne radioactive material release to the canyon atmosphere. The outer canyon walls, roof, and the Canyon Exhaust System will survive this smaller blast and will provide secondary confinement of the released radionuclides. The Canyon Exhaust System will pull the airborne radioactive particulate through the sand filters and exhaust the air through the 291–H Stack. Since the canyon structure and exhaust system confine and filter the radionuclides from the exhaust air, these systems mitigate the effects of the less than 3,000 pound TBP red oil explosion.

A red oil explosion that could occur in OF–H has the same release mechanism in that the explosion causes an airborne dispersion of the radionuclides. There are no mitigative features that reduce the accident consequences since the event occurs outside of any secondary confinement.

The radiological consequences to the onsite worker and the offsite population are from an airborne radiological dose. For the facility worker, the major concern is the immediate blast effects (shock wave and ejected chemicals and radionuclides) and potential long–term exposure to radioactive nuclides in the accident clean up process.

The following analysis identifies the AC and SSCs which, when implemented, reduce the frequency of the greater than 3,000 pound TBP event to less than 1.0E–06/year or to a BEU event. These controls are summarized in Table 8.3–2 and in the TSR. The controls necessary to reduce the frequency or mitigate the consequences of the less than 3,000 pound TBP event are also identified and listed in Table 8.3–2 and the TSR.

8.3.2.2.1.2 Preventive and Mitigative Features

There are three basic approaches to prevent a TBP–nitric acid reaction. These basic approaches limit the pressure build up, limit the temperature, and prevent large accumulations of TBP in a single vessel. The methods used to implement these basic approaches in H–Canyon include the following:

1. Maintain an effective vessel vent area that reduces constituent partial pressures in the vessel so that pressure increases do not increase the temperature and related energy release rates and limit evaporative cooling. If the mixture is open to the atmosphere, evaporation of water, diluent, and nitric acid is an efficient heat loss mechanism that limits the temperature of the mixture to the atmospheric pressure boiling point. Also, adequate venting allows the escape of reactants and intermediates from the reaction mixture, and limits the extent of the reaction. In contrast, a closed or inadequately vented system allows the pressure to increase as gaseous reaction products accumulate, which raises the boiling point, suppresses the heat loss due to evaporation, and retains partially reacted intermediates that continue to react and generate heat.

2. Prevent mixtures of TBP and nitric acid from reaching high temperature by controlling the heat sources and ensuring cooling mechanisms are capable of removing the heat being generated. The reaction will run away only if the temperature exceeds some

critical value (dependent on TBP mass and vessel heat removal mechanisms), above which the rate of heat generation exceeds the rate of heat loss.

3. Limit the mass of TBP present. This is accomplished by isolating the TBP from some process tanks or by the use of decanters. The total amount of heat and gases generated will be proportional to the amount of TBP that is reacted. With limited amounts of TBP, uncontrolled reactions can be accommodated with minimal consequences.

Not all of these basic approaches can be used in all process areas or with all process equipment. In some cases, application of only one approach is sufficient to prevent the runaway red oil reaction. In other cases, different combinations of these approaches are required to prevent the event. The following sections describe the approach to preventing a red oil reaction in various process areas or equipment types. The sections also derive the controls and basis for the controls.

Outside Facilities H–Area

Pure TBP and segregated solvent (TBP/n–paraffin mixture) are stored in tanks in OF–H. Specifically, the 30 vol. % TBP solvent for the Second Product Cycle is stored in OF–H tanks on a semi–permanent basis. Strong nitric acid is also stored in OF–H. There are no external heat sources attached to the pure TBP storage tanks and there is no identifiable method by which the pure TBP and any strong nitric acid could be mixed. Therefore, there is no potential for a red oil reaction involving the pure TBP stored in OF–H tanks. There is also no identifiable method by which the segregated solvent can be mixed with strong nitric acid. Although, there is some nitric acid entrained in the segregated solvent, tank design and the natural heat removal mechanisms will reduce, if not completely eliminate, the potential for a red oil reaction. An external heat source must be available to initiate the red oil reaction. Originally, an AC required that blanks be installed and maintained in the steam lines to the Segregated Solvent Tank coils. The steam lines to the steam coils in the Segregated Solvent Tanks in OF–H have been physically removed. An air gap, a DF, now exists between the steam lines and the steam coils in the tanks. Since steam can no longer be applied to the Segregated Solvent Tanks, there is no method available to heat the organic material above the 130° C minimum temperature at which a runaway TBP–nitric acid reaction will occur. Therefore, the AC to maintain a blank or blank equivalent in the steam lines to the Segregated Solvent Tanks has been deleted as a red oil prevention control. If, for any reason, the steam lines are reconnected to the Segregated Solvent Tanks or the tanks containing TBP, this would be a physical change to the facility that is controlled by the Configuration Control Program, and will be evaluated by the USQ Process.

Based on the lack of a significant heat source, excellent natural heat removal mechanisms, passive vents, and very limited, if any, potential to mix the TBP and strong nitric acid, it is judged that it is BEU for a red oil reaction to occur in the clean TBP storage tanks or in the stored segregated solvent. Note that this conclusion is based on existing conditions and DFs, and not on any specific instruments, active features, or ACs.

The only two process areas in OF–H in which a potential red oil explosion has been identified as a credible event are in the GP Evaporator and the ARU. This is because these evaporators may evaporate acidic aqueous solutions that have been in contact with and may contain TBP. The

steam heat source used to evaporate the solution in the evaporators can heat the solutions to greater than 130°C without adequate controls.

A red oil reaction can only occur when TBP is in the presence of strong nitric acid (i.e., acid with concentration greater than 2.5M [Ref. 32]). Experimental results have shown that the red oil reaction will not occur in aqueous solutions that are neutral (water) or caustic (basic). A pH of greater than, or equal to, 7.0 is sufficient to ensure that a red oil reaction will not occur. The GPE is used to evaporate rainwater and other low contamination aqueous solutions that have a very small potential to have come into contact with TBP. This evaporator is operated as a caustic evaporator with an aqueous feed solution pH greater than 7.0. The control that prevents a red oil reaction in the GPE is:

1. An AC that requires all aqueous feed to a caustic evaporator (e.g., the GPE) shall have a pH greater than or equal to 7.0 except during acid flush.

   Basis: This control ensures that conditions can never be reached in which a red oil explosion is a credible event.

This single control is sufficient to prevent a red oil explosion in any caustic evaporator. Additional controls are not required to prevent or mitigate a potential red oil reaction in a caustic evaporator if the solution being evaporated is neutral or caustic (pH ≥ 7.0).

The ARU is used to concentrate the overheads from the acidic evaporators inside the canyon. Calculation X–CLC–H–00478 determined that the overall acidity of the feed to the ARU is typically 4–6 wt. % nitric acid or about 1M (Ref. 109). This weak acid is concentrated to approximately 10M in the ARU. The ARU feed may contain TBP from the canyon processes. SRNL experimental studies, WSRC–TR–2000–00158 (Ref. 115), determined than TBP in the canyon evaporators is steam stripped along with the nitric acid. Because some TBP is entrained in the aqueous feed to the canyon evaporators, a small amount of TBP may be present in any batch evaporator run. Decanter upset conditions may allow some TBP to be fed to the evaporators. The potential exists to collect the TBP in the canyon evaporator overheads tanks and feed the TBP to the ARU where it could react with the strong nitric acid resulting in a red oil explosion.

The ARU may have all of the conditions necessary for a red oil runaway reaction and explosion: TBP in the presence of strong nitric acid and an external heat source capable of heating the mixture to the runaway initiation temperature. Therefore, controls must be selected to prevent the red oil explosion in the ARU.

There is a small radiological source term based on the Material at Risk (See SAR Addendum 2) in the ARU and a significant amount of nitric acid. The amount of the radiological material and nitric acid and the dispersion of these materials during an explosion do not result in significant radiological or chemical consequences to the off–site public or the 100–meter worker. The red oil reaction runaway initiation temperature in most scenarios is 130°C. This is true for the ARU and other evaporators when the evaporator is operating and active boiling is occurring. Because of the mixing during the boiling, the heat removal mechanisms are sufficient to ensure that the 130°C temperature of the bulk solution is not exceeded and a red oil reaction will not occur. The

ARU and other evaporators are not credited with having sufficient vent capability to prevent excessive pressures from occurring during operation. Colven in DPST–56–243, initially established a maximum temperature of 120°C in the evaporators to prevent a red oil explosion (Ref. 29). Smith and Cavin in WSRC–TR–94–0540 (Ref. 28) reinforced the 120°C temperature limit in the evaporators by showing that at least one foot of aqueous would protect six feet of organic in the evaporator at temperatures up to 121°C. With aqueous always in the evaporator when TBP could be present, the experimental results indicated the bulk solution temperatures will remain below 120° C. Smith's and Cavin's work covers a two–phase system in which the organic layer is on top of the aqueous layer. Based on the references, the safe temperature to prevent a red oil explosion in the canyon acidic evaporators and the ARU is 120°C.

Because a red oil explosion in the ARU does not have any significant offsite consequences, SC controls are not required. Additionally, a red oil explosion in the ARU does not have any significant consequences to the 100–meter onsite worker. A red oil explosion in the ARU will have significant consequences to the facility worker immediately adjacent to the hazard and therefore, SS controls are required to prevent a red oil explosion in the ARU. The potential hazard to the facility worker, which results in a high consequence, is the violent release of hazardous chemicals (strong acid) and radioactive materials from the evaporator and potential shrapnel from destruction of the ARU. The following controls are selected to prevent a red oil explosion in the ARU.

1. To prevent exceeding the 120°C temperature in the ARU, the ARU reboiler high temperature–steam flow interlock is credited as a SS feature.

   Basis: Prevents exceeding the red oil runaway reaction initiation temperature.

2. The low liquid level pump cutoff interlock on the ARU feed tank.

   Basis: Prevents feeding excess TBP to the ARU by stopping the feed before any organic floating on top of the ARU feed tank is fed to the evaporator. Since the feed tank is unagitated, the Low Liquid Level Pump Cutoff Interlock normally prevents accumulated organic from being fed to the ARU.

3. An AC requires a periodic inspection of the ARU feed tank for a continuous layer of organic shall be completed annually. Continuous layers of organic shall be removed by flushing or skimming.

   Basis: Allows detection and removal of the organic before it is fed to the ARU.

The controls for the ARU will ensure that the frequency of red oil event in the ARU is in the Extremely Unlikely frequency range. These controls are sufficiently robust that they provide adequate protection for the facility worker. As DiD, the normal process operations, steam stripping in the ARU, and the WSRC process systems provide additional robust controls to prevent a red oil explosion in the ARU from impacting the facility worker.

The control and DiD items noted above reduce the frequency of the accident and mitigate the consequences to the facility worker. With a medium consequence and Extremely Unlikely frequency, the red oil explosion in the ARU remains a Scenario Class II event.

Inoperable Canyon Processes and Areas Where TBP is not Used

Organic solvents are not used in the Dissolving and Head End processes. Although TBP is not routinely used in Head End, the Head End Evaporator 11.3E evaporates rerun solution, which may contain TBP. This section refers to normal Head End operations. The controls to prevent a red oil reaction in 11.3E are included in the later discussion on the evaporators. Since TBP is not used in the Dissolving and Head End processes, the normal process flow sheet dictates that a red oil reaction is not an event of concern in these process areas. If TBP were to be used in these areas, it would be a change to the process that will be evaluated by the USQ process. The USQ process will determine if a red oil reaction is a credible event in these process areas.

Another process area in which there is a significantly reduced potential for a red oil explosion is in the spent solvent wash cycle. This is because of the nature of the solvent wash process in which a carbonate solution is used as the primary wash solution and a dilute nitric acid solution is also used in the process. A SRNL review, SRT–CTS–95–0021 (Ref. 32), was completed to determine the minimum nitric acid concentration at which it is possible to have a red oil reaction. This report shows that a low reaction rate and the low boiling point of the weaker nitric acid solution makes the probability of a runaway TBP and nitric acid reaction for nitric acid concentrations below 2.5 Molar (M) negligible. Although the TBP that is sent to the solvent wash cycle contains some entrained nitric acid, the overall molarity of the acid in the process ensures that a red oil reaction will not occur. The weak acid coupled with the passive vents on the solvent wash tanks are adequate to prevent a red oil explosion in these vessels. No specific credit is taken for maintaining a minimum nitric acid concentration in the solvent washers or for ensuring vents are available. The normal process flow sheet and the design of vessels installed in the solvent wash areas are robust enough to prevent a red oil reaction in the solvent wash areas.

The H-Canyon Structure and the Canyon Exhaust System are credited with mitigating the consequences of a red oil explosion involving less than 3,000 pounds of TBP that occurs inside the canyon. This very robust system reduces the potential consequences of the event to the offsite public and the 100–meter onsite worker to significantly below the evaluation guidelines. The canyon structure, which will withstand the effects of the less than 3,000 pound explosion also provides adequate protection to the facility worker. This single robust control is sufficient to mitigate the event consequences to all receptors such that the risks are minimal.

The FWR Process and the Second Product Cycle are not authorized for operation. The FWR process did not use organic material such as TBP in the process and a red oil explosion in the FWR process was judged to be BEU. Although TBP was used in the Second Product Cycle, since this process is not authorized for operation, and is not expected to be authorized for operation, the solvent from this process has been removed from the equipment and stored in tanks in OF–H. The impact of removing the solvent from this inactive process is analyzed in the sections that follow in the greater than 3,000 pound red oil explosion in the evaporators. Since

this process is inactive and is not authorized for operation, it will not be considered further in this analysis.

> **If the Second Product Cycle is authorized for operation, during the start up activities, the process will be analyzed and the controls required to ensure safe operation, including the red oil controls, will be identified and submitted to DOE for approval. (C)**

Canyon Processes Where TBP is Present

For the remaining canyon processes and vessels, the analysis will be broken down into two groupings with two sections per group. The first group will be the storage tanks and the second group will be the evaporators. Each of these groups will include the greater than and less than 3,000 pound TBP events as separate sections.

GREATER THAN 3,000 POUND TBP RED OIL EXPLOSION

General. There are areas in H–Canyon and OF–H where greater than 3,000 pounds of TBP is present. As noted in the analysis above, for those areas in OF–H where it is possible to have greater than 3,000 pounds of TBP, a red oil explosion is a BEU event because there is no mechanism to mix the TBP with nitric acid and have an external heat source at the same time. Inside the canyon, there are two potential mechanisms to have greater than 3,000 pounds of TBP present in a single location. The first is when the Second Product Cycle is in operation and 30 vol. % TBP is used in the solvent extraction process. The second is when pure (100%) TBP is added to the solvent to reconstitute the solvent consumed in the First Cycle and Second Uranium Cycle Processes.

An analysis was completed to determine the ability of the canyon structure to withstand the effects of a red oil explosion. The analysis (Ref. 114) indicated that for explosions involving less than 3,000 pounds of TBP, if the pressure generated by the deflagration was less than 6 psi, then the canyon structure would remain intact. Additional analyses determined that a red oil explosion involving greater than 3,000 pounds of TBP would cause a blast pressure that would exceed 6 psi. To prevent structural damage and potential failure of the canyon structure, red oil explosions that can contain greater than 3,000 pounds of TBP are prevented. Therefore, controls that make this event BEU were developed.

A single canyon tank can contain more than 3,000 pounds of TBP if 30 vol. % TBP is used. However, as noted above, the Second Product Cycle is not authorized for operation and all of the 30 vol. % TBP has been removed from the canyon. Therefore, specific controls are not required for Second Product Cycle operations. However, controls are necessary to ensure that greater than 3,000 pounds of TBP are not introduced to the canyon vessels.

The first controls are required to ensure that the 30 vol. % TBP is not inadvertently transferred to the canyon from the OF–H storage location. When the 30 vol. % TBP was removed from H–Canyon, physical passive barriers and administrative controls were established to ensure that this material could not be inadvertently transferred to the canyon tanks. These barriers consisted of physical disconnects (e.g., physically removing a pipe section so that an air gap exists between

the ends of the pipes) in the OF–H Tank transfer out piping. Additionally, physical disconnects were established between the H–Canyon Third Level Head Tanks that could receive the 30 vol. % TBP and the tanks inside the canyon to which the material could be transferred. These physical disconnects are treated as passive DFs and were placed under the Configuration Control Program. Any changes to these physical disconnects will be a change to the facility configuration and will have to be evaluated by the USQ Program. A fault tree analysis, S–CLC–H–00227, Rev. 1 (Ref. 88), was completed to determine the adequacy of these controls to prevent a red oil explosion involving greater than 3,000 pounds of TBP inside H–Canyon. Although Reference 88 looked specifically at a potential red oil explosion in the evaporators, it can be applied to any tank inside H–Canyon simply because before the 30 vol. % TBP can be fed to any evaporator, it will go through multiple canyon tanks where the potential to detect the excess TBP will exist. Since the 30 vol. % TBP has to be fed to a canyon tank before it goes to the evaporator, the physical disconnects and programmatic controls prevent transferring the TBP to the canyon tanks and prevent exceeding 3,000 pounds of TBP in a single tank from an inadvertent transfer of the 30 vol. % TBP.

The second mechanism by which greater than 3,000 pounds of TBP can accumulate in a single canyon tank or an evaporator is from inadvertently adding too much pure TBP to the process tanks during reconstitution (make up) of the 7.5 vol. % TBP solution used in the operational solvent extraction processes. Although this make up TBP is introduced into the Solvent Wash Cycle tanks to replenish TBP consumed (by hydrolysis or radiolysis) during operations, the TBP could reach a single canyon tank or the evaporators. The most likely scenario for exceeding 3,000 pounds of TBP in a single tank or evaporator is from a spill or other release of the pure TBP to the canyon cell floor and then accumulation in the sump receipt tank(s) and evaporator. The fault tree analysis in Reference 88 included exceeding 3,000 pounds of TBP in an evaporator (and hence a single canyon tank) from transferring too much pure TBP into the canyon during solvent make up operations. There were no physical DFs or other SSCs that were identified that would prevent transferring excessive TBP into the canyon. The only control identified to prevent exceeding 3,000 pounds of TBP in a single tank was a process specific AC that limited the amount of pure TBP that could be transferred into the canyon to 750 pounds. This AC, which may be verified in various ways, (e.g., using the normal GS instruments on the OF–H transfer tank, the receipt tank on the Canyon Third Level, the sump liquid level, and the sump receipt tank) is adequate to prevent exceeding 3,000 pounds of TBP in a single tank or evaporator from an inadvertent transfer of pure TBP into the canyon.

The controls, which make a red oil explosion BEU with a frequency of 1.6E–08/year in the canyon tanks and evaporators, are:

1. The DF of a physical disconnect (e.g., air gap) on the transfer piping for the tanks used to store the used 30 vol. % TBP in OF–H to ensure that the 30 vol. % TBP solvent cannot be transferred back into the canyon.

2. The DF of a physical disconnect (e.g., air gap) on the transfer piping for the Canyon Third Level Head Tanks used to transfer 30 vol. % TBP to the canyon vessels to ensure that 30 vol. % TBP cannot be transferred to the canyon vessels.

3. The WSRC Configuration Control Program as described in WSRC Procedure Manual 7E and the WSRC Engineering Manual, WSRC Procedure Manual 1E. Compliance with this program will require that any potential changes to the physical disconnects be subjected to multiple reviews.

4. The WSRC USQ Program as described in WSRC Procedure Manual 11Q, Procedure 1.05. Compliance with the USQ Program requires that any permanent or temporary changes to the facility, process, or equipment, be reviewed by the USQ process to determine the potential impact on the SB.

5. A process specific AC. Limit the single transfer amount of pure TBP into the canyon to 750 pounds.

   Basis: The controls are established to ensure that 3,000 pounds or more TBP cannot reach the evaporators so that a red oil explosion involving 3,000 pounds of TBP is a BEU event. The most likely way for this to happen is by transferring too much pure TBP into the canyon during the solvent make up operations. The basis for this AC is that the fault tree assumes that a maximum of 1,500 pounds of pure TBP is transferred to a single vessel. This 1,500 pounds can be in a single transfer or in multiple transfers. Because the greatest risk is from having the 1,500 pounds of pure TBP present at one time in a vessel, such that an additional transfer can cause the 3,000 pound TBP limit to be exceeded, the fault tree assumes that all 1,500 pounds is received in a single transfer. The intent is to limit the amount of pure TBP transferred into the canyon in a single transfer to significantly less than (e.g., 750 pounds) 1,500 pounds analyzed in the fault tree. Based on the very infrequent transfers (typically one transfer per year) of pure TBP into the canyon, this will ensure that 3,000 pounds of pure TBP are not present in the canyon at one time regardless of the number of transfers actually made.

Tanks. There are no other specific ACs, SSCs, or DFs that are required to prevent a greater than 3,000 pound red oil explosion in the H–Canyon process tanks. However, WSRC Procedure Manual E7, Procedure 2.25 requires additional level of control to support the SC controls noted above. The following controls are identified as the SS controls that support the SC controls identified above.

Tanks 12.6, 12.8, 13.5, 13.8, 14.6, 14.8, 15.1, and 15.3 have an unused nozzle designated as a Red Oil Vent (ROV). The ROVs were established based on an experimental investigation and analysis, ECS–SSS–950007 (Ref. 25), that demonstrated that the PVV and vessel overflow piping provide sufficient vent area for most canyon vessels. Vessels that have small diameter overflow pipes, typically tanks that are smaller than 10 feet x 11 feet, need additional vent area and have one spare nozzle opened and specifically designated as a ROV nozzle, a DF. The minimum vent area of 6.44 square inch (in^2) that is sufficient to relieve the pressure from a red oil reaction was derived from the Fauske and Company experiments included in WSRC–TR–94–0501 (Ref. 116). This reference identifies those H–Canyon vessels for which adequate venting exists. The vessels noted above that required additional venting to prevent a red oil explosion involving greater than 3,000 pounds of TBP are identified in X–CLC–H–00304, Rev. 0 (Ref. 89). Dust covers with special markings were installed on the Hot and Warm Canyon vessels that required additional vent area. The specially marked dust covers keep dust, dirt, and

other debris out of the process vessel. The dust cover allows adequate pressure relief and venting of the tank. Periodically, the presence of the dust covers is verified by visual inspection using the canyon cranes and procedures that identify which vessels have the ROV nozzles. The ROVs are SS items that support the SC controls identified above.

One method to prevent a red oil reaction is to prevent mixtures of TBP and nitric acid from reaching a high temperature by ensuring cooling mechanisms are capable of removing the heat being generated. The reaction will run away only if the temperature exceeds some critical value (dependent on TBP mass and vessel heat removal mechanisms), above which the rate of heat generation exceeds the rate of heat loss. Heat removal from the tanks is an effective method to prevent a red oil reaction.

The canyon air exhaust system, a SC system, maintains sufficient airflow to provide adequate heat removal through the tank walls provided the tank contents are thoroughly mixed and a two phase layer system does not exist. Initial studies (Ref. 25) indicated that the agitator provides sufficient fluid motion for the necessary heat transfer although an unmixed organic layer may be present in certain circumstances. Reference 25 indicated agitation is required only when there is a mechanism for heating the top layer of solution in the tank, (e.g., steam jetting solution into the tank). After the transfer has been completed, agitation can be stopped.

In the original studies, indication of agitation for vessels, which could contain 3,000 pounds of TBP, was designated as an additional SC system based on a review of the Russian TBP incident at the Tomsk reprocessing facility. WSRC–RP–98–00171, Rev. 1 (Ref. 27), reports subsequent experiments and analyses results that demonstrate adequate mixing and heat transfer is available to prevent overheating the top organic layer without agitation in the tank even if the steam jet is left on for an extended period after all the liquid solution is transferred. Reference 27 proves that if the steam jet is left on without agitation being present, the maximum theoretical temperature the organic layer will reach is 128° C, still below the 130° C limit at which the runaway red oil reaction is assumed to occur in the safety analysis. Since agitation is not required to ensure that the organic layer will not exceed the 130° C limit, the requirement for SC indication of agitation on tanks that can contain greater than 3,000 pounds of TBP is removed.

DPST–56–243 (Ref. 29) was used to establish 130° C as the always–safe temperature to prevent red oil explosions in the H–Canyon evaporators. This temperature was below the approximately 135° C minimum temperature at which initiation of a runaway reaction between TBP and concentrated (70–wt. %) nitric acid was observed to occur (Ref. 29). Previous experimental results had demonstrated that initiation did not occur until the temperature exceeded 135° C. For example, initiation of the TBP–nitric acid runaway reaction was observed to start at temperatures above 140° C for an acid concentration of 50–wt. %, which is the maximum acid concentration typically used in the canyon processes. Literature data indicates that a runaway red oil reaction is not initiated in an open (vented to atmosphere) vessel below 135° C. The H–Canyon vessels have at least one passive vent to the canyon atmosphere.

SRNL completed experimental analyses to verify the 130° C reported in Reference 29. The SRNL experiments also determined the effects of inextractable solids on the red oil runaway reaction initiation temperature. These SRNL experiments are summarized in WSRC–TR–2000–

00427 (Ref. 31), concluded that "The runaway reaction initiation temperatures for TBP in contact with nitric acid solutions containing no dissolved solids were in good agreement with the data from the 1950s." The minimum initiation temperature, 137° C, measured at 14–15M nitric acid was consistent with previously measured values in the 132 – 137° C range at nominally 15.7M nitric acid. The initiation temperature measured with TBP in contact with nitric acid solutions containing 5, 10, and 20 wt. % dissolved solids depicted a small dependence on the solids concentration; however, the temperatures were well above the minimum value for no dissolved solids." Data from Table 2 of this report shows that the minimum initiation temperature observed was 139° C with the lowest average initiation temperature for each group being 137° C.

Reference 31 also concludes "To obtain a runaway TBP/nitric acid reaction, it was necessary to seal the RSST™ containment vessel at atmospheric pressure prior to initiation of an experiment." This conclusion supports literature data and experimental evidence that in an open vented system, such as the H–Canyon process vessels, a runaway TBP/nitric acid reaction will not occur. The SRNL report supports the conclusion that with no agitation in the H–Canyon tanks, there is sufficient venting and a safe margin between the maximum theoretical temperature of 128° C in the tank and the actual TBP/nitric acid initiation temperature in excess of 130° C.

The above analysis indicates that the only SS control required to back up the SC controls, which prevent a greater than 3,000 pound TBP explosion, are as follows:

1. The DF of those tanks for which the liquid overflow line and the PVV nozzle provide adequate vent area to relieve the pressure associated with the red oil decomposition reactions. OR

2. ROVs on Tanks 12.6, 12.8, 13.5, 13.8, 14.6, 14.8, 15.1, and 15.3.

Evaporators. Similar to the tank discussion above, there are no other controls required to prevent a red oil explosion involving greater than 3,000 pounds of TBP in the H–Canyon evaporators. However, per the WSRC Procedure Manual E7 at least one additional SS level of control is required as DiD to support the SC controls. The analysis and basis for this additional level of control follows.

There are two potential methods to provide significant DiD to the SC controls required to prevent the greater than 3,000 pound TBP red oil explosion. The first method is to limit the temperature of the bulk solution in the evaporator and the second method is to limit the mass of TBP that can enter the evaporator. Either of these methods will be effective in preventing the red oil explosion. Since the thrust of the SC controls identified above is to prevent exceeding the 3,000 pound limit in any canyon vessel, a control that limits the amount of TBP fed to the evaporator provides adequate DiD to serve as the SS back up control to the identified SC controls.

The control selected will limit the mass of TBP present in the evaporators by use of decanters. The total amount of heat and gases generated will be proportional to the TBP mass that is reacted. With limited amounts of TBP, uncontrolled reactions can be accommodated with minimal consequences. The tank decanters prevent the accumulation of excessive organic in the

evaporators where red oil involving greater than 3,000 pounds of TBP is a concern. This feature, combined with the maximum 8.5 vol. % TBP in the operational HM processes and the limit on the amount of pure TBP introduced to the canyon on a yearly basis, limit the amount of organic that can be fed to a particular vessel or evaporator.

Report WSRC–RP–98–00556 (Ref. 33) demonstrated that the box decanters used in H–Canyon are at least 98% efficient in separating the aqueous and organic phases. Other experiments and operational experience have shown that the tank decanters are at least 98% efficient in separating the organic and aqueous phases. This analysis assumes that the decanters are at least 90% efficient in separating the two phases and allowing only the aqueous phase to be fed to the evaporators. The decanter efficiency of 90% was chosen in the accident analysis as a conservative analytical limit to protect the actual expected decanter efficiency of >98%. As the expected efficiency of the decanter decreases, the probability increases that large amounts of solvent will enter the evaporator feed streams. This 90% efficiency limit is applicable to any decanter that is used to limit organic levels in the evaporators to prevent red oil explosions. Therefore, the SS DiD control for the canyon evaporators to prevent a greater than 3,000 pound TBP red oil explosion is:

1. An AC ensures that all acidic evaporator feed which has been in contact with organic solutions shall be processed through a decanter prior to evaporation.

An aqueous heel is required for the box decanters to work properly. The steam to the transfer jets that transfer aqueous from Box Decanters 13.6–1S and 16.1–1S are blanked off to prevent the removal of aqueous to ensure proper operation of the decanters. There are physical characteristics that are necessary for the tank decanters to work properly also. This analysis assumes that the decanters are operating correctly when they are in use. The analysis assumes that the decanters are operational based on nothing more than the normal physical characteristics of the equipment and piping and the routine operating and maintenance procedures for use of the decanters in the process. In other words, no specific requirements are established to ensure that the decanters are operational.

The secondary level of control, based on the WSRC Procedure Manual E7, Procedure 2.25 requirements, to prevent the greater than 3,000 pound TBP red oil explosion is the SS temperature instruments required to prevent the less than 3,000 pound TBP event.

LESS THAN 3,000 POUND TBP RED OIL EXPLOSION

Although the greater than 3,000 pound TBP red oil explosion is a BEU event based on the controls analyzed above, a red oil explosion involving less than 3,000 pounds of TBP is a credible, but Unlikely, event with a frequency of 1.0E–04/year (Ref. 88). Since TBP and strong nitric acid are used in the HM–Process and an external heat source is available in most areas where a red oil reaction is possible, the small red oil explosion is a significant event.

The previous red oil explosions that have occurred at SRS have involved limited quantities of TBP (e.g., for the TNX evaporator explosion it was about 40 liters or 80 pounds of TBP). Since red oil explosions involving small quantities of red oil challenge the safety systems and barriers

that protect the offsite public, the onsite workers, and the environment, adequate controls must be identified to prevent or mitigate the results of a potential red oil explosion.

The mitigated consequences of events with a mass less than 3,000 pounds of TBP are less than the Evaluation Guideline for radiological doses to the onsite worker and the offsite public. Since the canyon structure, the sand filter and canyon exhaust system are expected to survive the effects of a red oil explosion involving less than 3,000 pounds of TBP, the accident consequences are mitigated by these SC systems. These mitigative systems reduce the event consequences from a high category to a medium category. Also since this event occurs within the canyon, the radiological doses from this event are expected to be less than the doses received from a transfer error to outside or a release to the cooling water systems. The consequences for a red oil explosion involving less than 3,000 pounds of TBP are in the consequence section of Addendum 1 to this SAR. The red oil explosion is not the bounding consequence event in the Unlikely frequency category.

If a red oil explosion involving less than 3,000 pounds of TBP were to occur inside the canyon, the canyon building structure is credited with surviving the explosion without significant structural damage. The building structure will provide secondary containment for the released radionuclides and hazardous chemicals. The building structure also provides protection to the facility worker from the immediate blast effects (e.g., shrapnel and burning vapor cloud) of the explosion. The Canyon Exhaust System will rapidly remove the radionuclides released in the explosion and limit the effects of the release. It is assumed that the Canyon Exhaust System will maintain or very rapidly restore a vacuum in the Hot and Warm Canyons and the Exhaust Tunnel. By maintaining the air flow, the Canyon Exhaust System ensures that all of the released radionuclides are pulled through the sand filter rather than being released as a ground level, unfiltered release. This has a significant mitigative effect on the accident consequences.

The SC control that mitigates the radiological and chemical consequences of a red oil explosion involving less than 3,000 pounds of TBP is:

1. The H-Canyon Building Structure and the Canyon Exhaust System and its support SSCs.

This single control reduces the offsite public and onsite worker consequences to small fractions of the respective evaluation guidelines. An AC that also supports this control to mitigate the consequences is the Structural Integrity Program.

Tanks. Since First Cycle and Second Uranium Cycle are the only operational solvent extraction banks, there is very limited potential to accumulate significant TBP in the canyon tanks in the presence of strong nitric acid. Since some TBP can accumulate in the tanks, controls or physical characteristics of the process are relied upon to prevent a red oil explosion in the tanks.

For agitated and unagitated tanks, the airflow provided by the Canyon Exhaust System is a sufficient heat removal mechanism to ensure that a runaway red oil reaction does not occur in the vented H–Canyon tanks. See the discussion above on this scenario in the discussion on the greater than 3,000 pound event. If it is assumed that an organic layer is on top of the aqueous layer in the H–Canyon tanks, there is still no potential for a red oil reaction to occur. If it is assumed that after a transfer is completed that the steam jet is left on for a significant period of

time, a red oil reaction will not occur even if the raw steam is blowing on the organic layer. The heat removal mechanisms (e.g., condensation of the steam, heat loss through the tank walls) will prevent the bulk solution temperature in the vented tank from exceeding 128°C (Ref. 27), well below the actual runaway initiation temperature of in excess of 130°C.

There have not been any other mechanisms identified by which a red oil reaction could be initiated in the vented H–Canyon process tanks. The DF of the tanks (passive PVV nozzle and overflow line) and where applicable, the ROVs, are the secondary controls that will prevent a red oil explosion in the process tanks. The ROV nozzles do not prevent or limit the amount of TBP that can accumulate in the tank. Instead, they ensure that the passive vent area of the tank is sufficient to allow effective venting of the vessel based on the total amount of TBP that can be in the tank under the worst case conditions. The determination if a ROV is required is based on the assumption that the tank is capable of containing sufficient solvent such that a runaway reaction of concentrated nitric acid saturated TBP could occur if additional vent area is not provided. The only vessels that meet this criteria are canyon vessels associated with the solvent recovery system. The passive design of these vents plus the natural chemical and physical attributes of the system will adequately prevent a red oil explosion involving less than 3,000 pounds of TBP in the H–Canyon Tanks. The single control applied to the tanks that will prevent a red oil explosion is as follows:

1. The DF of those tanks for which the liquid overflow line and the PVV nozzle provide adequate vent area to relieve the pressure associated with the red oil decomposition reactions. OR

2. ROVs on Tanks 12.6, 12.8, 13.5, 13.8, 14.6, 14.8, 15.1, and 15.3.

Note that either or both of these controls may be applied as necessary to support operations and to reflect the physical plant conditions.

Evaporators. TBP can be fed to the evaporators as part of the evaporator feed. The TBP could accumulate in the evaporator during the batch operations. Additionally, TBP degradation products can be fed to the evaporator, thereby increasing the equivalent TBP mass in the evaporator and increasing the potential effects of a red oil explosion.

TBP degrades to Dibutyl Phosphate (DBP) and Monobutyl Phosphate (MBP) from radiolysis and hydrolysis of the TBP and DBP molecules. Because the degradation products, DBP and MBP, have a significant negative impact on the efficiency of the solvent extraction processes and also contribute to criticality concerns by complexing with Pu and U, the DBP/MBP are removed from the used solvent in the Solvent Recovery Cycle. The DBP/MBP are removed in a carbonate solution wash and a weak nitric acid (<2.5M) washing process. DBP and MBP are highly soluble in the carbonate solution. The waste products from the solvent wash process are typically fed to an evaporator for concentration before the concentrated solution is sent to the HLW Tank Farms for ultimate disposal. The carbonate and weak acid waste solution can be neutralized and sent directly to the HLW Tanks without being processed through an evaporator. Operational experience indicates that a maximum of about 100 pounds of DBP/MBP will be removed from the used solvent during a single solvent wash cycle. This is based on using

"fresh" solvent that has not been "sitting around" in process tanks and has not been used in a long time.

A natural phenomena of the evaporation process prevents excessive accumulation of TBP in the evaporators. This is the steam stripping of the TBP during the evaporation cycle. Pierce in Reference 115 demonstrated that natural physical process of steam stripping is effective in removing TBP from the evaporator bulk liquid contents. Pierce and Thompson in WSRC–TR–99–00040 demonstrated that DBP and MBP do not steam strip from the evaporator bulk solution (Ref. 117). The reference concluded "Additionally, boiling DBP in the presence of nitric acid appears to cause gradual DBP degradation via acid hydrolysis." The destruction of the DBP and MBP by acid hydrolysis is consistent with literature results and operational experience in both F–Canyon and H–Canyon. Therefore, it is concluded that the process of concentrating the evaporator feed and the high acid in the evaporator bottoms degrades the DBP/MBP during the evaporation process so that the DBP/MBP does not accumulate sufficiently in an evaporator to cause a red oil concern. The natural processes of steam stripping the TBP and the hydrolysis of the DBP/MBP prevent accumulation of red oil type organic compounds in the evaporators. No controls are identified for this mechanism other than the normal canyon evaporator operating conditions.

As previously noted, all aqueous feed that has been in contact with organic material will be processed through a decanter prior to being fed to the evaporators. The decanters, when they are operating properly, prevent feeding significant (e.g., bulk quantities) of organic (TBP) to the evaporator. However, since the decanters are not 100% efficient (assumed to be 90% efficient in this analysis), some entrained and small amounts of organic liquid will be fed to the evaporator. For the very small amounts of entrained organic fed to the evaporators, the steam stripping of the TBP from the bulk solution will prevent excessive accumulation of TBP in the evaporator. However, the small amount of entrained TBP or a large slug of TBP that passes through the decanter could cause a red oil explosion in the evaporator. Although it is nearly impossible to get more than a few hundred pounds of TBP at a single instance in the evaporator from decanter upsets or entrainment, a sufficiently large amount of TBP could challenge the barriers to preventing a radioactive material release from a red oil explosion.

As previously shown, Smith and Cavin in Reference 28 demonstrated that one foot of aqueous in a unagitated, vented vessel, such as the evaporators, is sufficient to maintain evaporative cooling and prevent a red oil explosion. The cooling effect is from the transport of water from the underlying aqueous phase to the TBP phase, which is sufficient to maintain continuous evaporation and a net cooling of the solution. This conclusion covers temperatures up to 120° C and organic depths to at least 6 feet.

The two mechanisms for loss of aqueous from an evaporator are evaporation and displacement. By controlling the evaporator temperature and the loss of organic to the aqueous stream (decanter controls), the fraction of the evaporator contents that is aqueous will be indirectly controlled. With aqueous always in the evaporator when TBP could be present, the experimental results in WSRC–TR–94–0540 (Ref. 28) indicated temperatures will remain below 120° C. At these temperatures runaway reactions cannot occur. To prevent a potential problem, the following are required for evaporation of acidic solvent extraction waste and products in the H–Canyon batch evaporators. Solvent extraction wastes may be neutralized and discarded without

evaporation, if necessary. These features limit the evaporator temperatures, limit the organic that could enter the evaporator, and ensure that sufficient aqueous is present to provide the evaporative cooling necessary to prevent a red oil reaction in the evaporators. These controls are major contributors to defense-in-depth as required by the WSRC Procedure Manual E7, Procedure 2.25. Note that the tertiary control is the same as the one for preventing a red oil explosion involving greater than 3,000 pounds of TBP in the evaporators. The controls, which are active SSCs as instrumented interlocks and an AC, are as follows:

1. Evaporator temperature sensors and interlocks on Evaporators 6.8E, 7.6E, 7.7E, 9.1E, 9.2E, 11.3E, 17.2E, 17.6E, and 17.8E that will maintain the evaporator bulk solution temperature equal to or less than 120° C are SS. The temperature sensor will be interlocked to the steam flow to the evaporator so that the steam flow will be shutdown if a high temperature conditions in the bulk solution is determined.

2. An AC ensures that all acidic evaporator feed which has been in contact with organic solutions shall be processed through a decanter prior to evaporation.

These two preventive controls are sufficient to ensure that a red oil explosion involving less than 3,000 pounds of TBP in the canyon evaporators is an Unlikely, if not Extremely Unlikely event. As such, they are effective controls in ensuring that a red oil explosion does not occur in the evaporators.

Recent operating experience in some H–Canyon evaporators has shown a higher than expected failure frequency of the temperature sensor required by the first control above. It had previously been assumed that the temperature sensor, a RTD, had only one failure mode in which it failed high giving a high and, therefore, a conservative temperature indication. The recent RTD failures have resulted in the RTD failing in a non–conservative mode, such that a low temperature reading was obtained. The non–conservative temperature indication has the potential to cause a red oil explosion in the evaporators by allowing the bulk solution temperature to exceed the 120°C limit. The failure mode detected was the nitric acid attack on the thermowell housing. The nitric acid would corrode the thermowell to the point that moisture and nitric acid could enter the thermowell and cause erratic or low readings of the RTD. Although the accident analysis assumes that the RTD will fail and that the failure will be detected prior to or during operation of the evaporator, because of the significance of the RTD failure, special actions are required to verify operability of the RTD. These actions include an inspection or replacement of the RTD a maximum of every 18 months.

The control implemented as a TSR SR is:

1. The structural integrity of the thermowell housing for the RTD in the Canyon Acidic Evaporators and the ARU shall be inspected or replaced on a periodic basis not to exceed 18 months.

The requirement to inspect or replace the RTD every 18 months applies to the canyon evaporators and the ARU reboiler temperature sensors. This AC or TSR surveillance provides additional assurance that a failed RTD will not go undetected by ensuring that the structural integrity of the thermowell housing of the RTDs in the acidic evaporator and the ARU is

maintained. This requirement protects against a failed RTD giving a low temperature reading, which may cause the upper temperature limit of 120°C to be exceeded. Normally a SR or test such as this has a 25% grace period in which to complete the surveillance before a TSR violation occurs. For the RTD inspection, the 25% grace period does not apply and the inspection or replacement must occur within the 18 month interval. If a RTD is found to be or suspected to be inoperable or does not pass the inspection criteria, only those components of the instrument loop that are determined to be inoperable must be repaired or replaced.

To provide further assurance that a non–conservative failure of the RTD will be detected during operation of the acidic evaporators and ARU, operating procedures require that the temperature readings be taken periodically. These temperature readings are compared against a known temperature that is expected during boiling conditions in the evaporators and the ARU. If the temperature reading is less than the comparison value or is not consistent with the other process operating parameters, an evaluation of the abnormal temperature is completed to determine the appropriate actions to take (e.g., continue operations or shut down the process). These procedural actions are not credited in the fault tree or the accident analysis and are simply process related and good conduct of operations activities that provide defense in depth to ensure that a RTD failure will be detected.

A DiD control to the temperature sensor and interlock on the acidic evaporators is the high steam coil pressure–steam flow interlock. The evaporators are heated with nominally 25 psig steam. The temperature of 25 psig steam is 130°C. By sensing a high steam coil pressure and shutting down the steam flow rapidly, this interlock provides additional assurance that the bulk solution in the evaporator will not be overheated such that a runaway red oil reaction could occur in the evaporator. Note that this is an indirect method of controlling the bulk liquid temperature in the evaporator. The steam coil pressure interlock plus other instruments and interlocks on the evaporators, although not credited in this analysis, provide significant DiD against a red oil explosion involving any amount of TBP. These other GS interlocks and alarms along with the normal operation of the evaporator provide multiple independent barriers that must fail before a red oil explosion could occur in the evaporator. There are many different SSCs, physical and chemical barriers, and normal operational controls that provide significant DiD against a red oil explosion.

Conclusion

The controls identified do not move the frequency of the event involving less than 3,000 pounds of TBP from the Unlikely category.

- An Unlikely frequency with medium consequences makes the red oil explosion with less than 3,000 pounds of TBP a Scenario Class II event.

8.3.2.2.2 EXPLOSION – ANION RESIN

NOTE: Planned missions for H–Canyon do not require FWR operations. Therefore, the controls described below are included in this SAR for information only, and implementation or complete reference is not warranted/required. **Prior to start up of any future FWR**

operations, the TSRs and this SAR will be revised as necessary to ensure the appropriate controls are identified and implemented before process operations begin. (C)

The H–Canyon PHA, (Ref. 8) (PHA Events IE–04 and IE–05) considers a potential explosion involving the anion resin in the ion exchange column in the FWR Process to be a significant event because Pu–238 can be released to the environment. Since several anion resin column explosions have occurred in the nuclear industry with closed (i.e., unvented) columns, the frequency of a resin explosion is classified as Extremely Unlikely, because the SRS column contains a passive vent (open column). The consequences of a resin explosion to offsite and onsite receptors are classified as high. The consequences to a facility worker are classified as low. The combination of an Extremely Unlikely frequency and a high consequence result in a Scenario Class II event. When the active systems and ACs are considered (described below), the consequences are reduced to medium for the onsite and offsite receptors. The event then becomes a Scenario Class III event based on an Extremely Unlikely frequency and a medium consequence.

8.3.2.2.2.1 Release Pathways and Scenarios

The anion resin column explosion scenario assumes that the ion exchange column is a closed (unvented) system from which the chemical reaction degradation products cannot escape. The rapid build up of the gaseous degradation products leads to a rapid pressure rise in the closed system. The rapid pressure rise is released as an explosion involving the column and its contents. Even though the H–Canyon resin column is vented, the scenario for an anion resin explosion in H–Canyon has as an initiating event an extended loss of cooling solution flow to the column while loaded with the Pu–238 isotope. After the initiating event, the scenario occurs in three phases: 1) heat generated by decay of the Pu–238 heats the solution remaining in the column to boiling; 2) boiling continues until the solution is driven off and the resin is dry; and 3.a) the dry nitrated resin spontaneously ignites, burns inside the ion exchange column and pressurizes the column until the column explodes, OR 3.b) the dry nitrated resin is contacted by strong (greater than 9M) nitric acid. If strong (greater than 9M) nitric acid comes into contact with anion exchange resin that has been previously exposed to the nitrate ion, the resin reacts violently generating a tremendous amount of volatile gases and a very rapid pressure increase in the vessel. For an explosion to occur both Phases 1 and 2 have to occur then either one of the actions listed in Phase 3 has to occur. Boiling of the aqueous solution in the anion resin column begins about 1.5 hours after the initial loss of cooling solution flow to the column.

The accident analysis assumes that the anion resin is fully loaded with a maximum of 800 g Pu–238. The resulting explosion releases the 800 g Pu–238 to the canyon atmosphere as an airborne particulate. The anion exchange column explosion will not significantly damage the canyon building structure or other SC or SS systems; therefore, the majority of the radioactive material released would remain within the confines of the canyon. Any material escaping the canyon will be exhausted through the 291–H stack after filtration through the sand filter. The consequence analysis assumes that there is a maximum of 5 kg Pu–238 in any single FWR process tank.

8.3.2.2.2.2 Preventive and Mitigative Features

The controls that prevent or mitigate an anion exchange resin column explosion are the same for either type of explosion described above. Essentially these controls are designed to prevent the column from ever reaching a dry state.

The following ACs are for information only (since the FWR process is not authorized for operation), and may not be included in other DSA documentation:

- Limit the type of anion resin used in the ion exchange process
- Limit the type and concentration of the chemicals that can come into contact with the resin
- Limit column temperature
- Limit flow interruption to the column during periods when actinides are loaded on the column and the ion exchange process is operating
- Limit the concentration (molarity) of the nitric acid in the column feed tank to 9M. The acid in the feed tank is sampled before it is fed to the ion exchange column
- Limit the Pu loaded on the column resin to a maximum of 800 g Pu–238 for processing operations with a maximum of 5 kg Pu–238 in a single tank
- Limit the concentration of the stored solutions to a maximum of 1.0 g/l Pu–238 based on a mass limit of 5 kg Pu–238 in a single tank

SRTC–CTS–95–0076, Rev 1 (Ref. 34) shows that the always open passive vent area (DF) at the top of the column is of sufficient size to relieve pressure generated by the boiling solution inside the column. It is expected this vent area is also sufficient to relieve pressure generated by reaction/combustion products after resin dryness, however, this conclusion has not been documented. Note that when the accident was postulated, the explosion occurred in an unvented column that allowed the pressure to increase to the point an explosion could occur. This passive vent will relieve some if not all of the pressure generated during the reactions preceding the explosion. Although no credit was taken for the vent in the accident analysis, it is recognized that this is a passive DF that would help prevent the anion resin explosion event.

Because of the process vent, it is expected that the loaded resin will start to burn before an explosion occurs because sufficient pressure will not build up in the column to create an explosive condition. The controls to prevent a resin explosion are the same as the controls to prevent the resin fire. Some passive, engineered features that prevent a resin fire and explosion are the design of the column and head tanks; gravity feed to the column from head tanks located on Third Level; the jackleg that ensures the resin bed remains covered with solution during any temporary loss of solution flow; and the vessel and piping design that prevents spilling resin to the canyon floor or the tops of other vessels. The SC system which prevents an anion resin explosion is the seismically qualified Third Level Head Tank 18A and associated piping and valves that feed liquid from the head tank to the ion exchange column to cool the resin.

The SS engineered control that prevents a resin explosion is the column temperature instruments. ACs which prevent a resin explosion are: 1) resin bed temperature limits, 2) a 15–minute flow interruption time limit when the column is loaded with Pu–238, and 3) resin specifications.

The passive engineered feature that mitigates the consequences of a resin explosion is the canyon building. The SC engineered control that mitigates the resin explosion is the canyon exhaust system (which includes the sand filter, the SC 292–H Exhaust Fans (including Fan Damper Air System), the H-Canyon Canyon Exhaust Vacuum/Supply Fan Interlock, and the canyon exhaust tunnel). An AC that mitigates the consequences of a resin explosion is the 800 g Pu–238 resin loading limit. The Tank 16.4 Liquid Level transmitter and chart recorder, which measures the amount of Pu–238 being loaded on the column, is a SC system. The combination of the administrative and engineered controls is sufficient to ensure that the frequency of an anion resin explosion in the ion exchange column remains Extremely Unlikely. It is noted that these same controls make the earthquake–induced anion resin fire in FWR (discussed later) a BEU event. Since a fire is expected to occur in the ion exchange column after an extended loss of flow event BEFORE an explosion will occur, it is thought that an explosion in the ion exchange column is also BEU. However, for the purposes of this SAR, it is assumed that an anion resin explosion is a credible event in the Extremely Unlikely frequency category.

Consequence calculations take credit for the canyon exhaust system (including the sand filter) and the 800 g Pu–238 resin loading limit. An explosion is expected to have higher consequences than a fire because an explosion is a high–energy event and a fire is a medium energy event. However, even if the resin explosion consequences are increased by a factor of 10, the resulting doses to the offsite and onsite receptors would still be classified as medium.

The combination of an Extremely Unlikely frequency and a medium consequence reduces the Scenario Class from II to III.

8.3.2.2.3 EXPLOSION – FLAMMABLE GAS/VAPOR DEFLAGRATION DUE TO CHEMICAL REACTION OR RADIOLYSIS

The H–Canyon PHA (Ref. 8) (PHA Events DV–01, HE–04, SE–05, EV–04, WD–02, RR–04, AL–02, and IE–03 considers a potential flammable gas/vapor explosion (deflagration) in H–Canyon. In those canyon processes where flammable gas/vapor was identified as a hazard in the PHA, the deflagration frequency was determined to be an Anticipated event. For the A–Line process where hydrogen was identified as a hazard, the hydrogen deflagration was determined to be an Extremely Unlikely event. In determining the event consequences in the PHA, the sand filter or other filtration systems were not credited because the ventilation system (fans [including damper air systems] and power supplies) is considered an active engineered feature. The consequences of a deflagration in the canyon processes are classified as high to the offsite and onsite receptors. The consequences to a facility worker are classified as low. An Anticipated frequency and high consequences makes this a Scenario Class I event. For the A–Line process, the facility worker consequences are considered to be high while the onsite and offsite consequences are low. The onsite and offsite consequences are low because of the limited dose potential from the uranium material in A–Line. The combination of an Extremely Unlikely frequency and a high consequence result in a Scenario Class of II for the A–Line event. When

the active systems and ACs are considered (described below) the frequency of a deflagration in the canyon is reduced to Extremely Unlikely and the consequences are reduced to low for the various receptors. Therefore, for the canyon the event becomes a Scenario Class IV event. Mitigation features reduce the consequences of a hydrogen deflagration from high to low for A–Line. The event then becomes a Scenario Class IV event based on an Extremely Unlikely frequency and a low consequence.

One PHA (Appendix H) event (NU–5) discussed the release of radiological material due to a hydrogen deflagration of radiolysis gases in the NU trailer as a medium chemical consequence event to the facility worker and a potential facility worker fatality from shrapnel. The radiological and chemical consequences for both the onsite and offsite receptors and radiological consequences for the facility worker were low. The PHA determined the frequency of a hydrogen deflagration in the NU Trailer to be BEU. This event will not be further discussed in this SAR.

8.3.2.2.3.1 Release Pathways and Scenarios

Flammable gas/vapor can be generated in H–Canyon as follows: 1) hydrogen during dissolution in the dissolver and by radiolysis of water, 2) ammonia during waste neutralization, and 3) organic vapor when solvent is present (Ref. 158). Accumulation of hydrogen gas in either the dissolver, evaporator, or other canyon vessels, the generation of ammonia during waste neutralization, or the presence of organic vapor, with an ignition/spark source, can result in a deflagration. Flammable gas/vapor is generated in the dissolver during operation by the chemical reactions involved in the dissolution process. Hydrogen generation by radiolysis in H-Canyon is a concern only in those process areas where there are significant amounts of high-energy gamma radiation emitting fission products or in those processes with high–specific activity alpha particle emitters such as plutonium. Typically, uranium solutions, after the fission products, plutonium, and neptunium have been removed, do not generate significant amounts of hydrogen even in highly concentrated solutions. The low hydrogen generation rate by radiolysis of water in uranyl nitrate solutions is the reason for the Extremely Unlikely frequency for the A-Line tanks. The hydrogen generation rate in these vessels at the worst case concentration of uranium is so low that it will take months, if not years, to generate enough hydrogen to exceed the LFL of a hydrogen–air mixture in these tanks. Ammonia generation is only a concern during and after waste neutralization. In acidic solutions ammonia is present as ammonium, which is not volatile. Hydrogen and ammonia contribute to flammable gas/vapor for neutralized waste solutions. The decanters downstream of the mixer-settlers are designed to remove solvent that is carried into the aqueous streams. The decanters can contain a solution generating hydrogen radiolytically and a solvent which generates flammable vapor, and impact the Composite Lower Flammability Limit (CLFL). Small amounts of solvent may also be entrained in the aqueous streams that have been in contact with solvents and contribute organic vapor to flammable gas/vapor further down stream.

For a deflagration accident, the accident analysis assumes the canyon process vessels are closed systems (i.e., no passive or active ventilation features are considered) and any hydrogen generated in the process vessels, and any ammonia or organic vapor present, accumulates as flammable gas/vapor until the CLFL of a flammable gas/vapor–air mixture is exceeded.

Although active ignition sources (e.g., open flames, exposed electrical connections, or spark producing equipment) are not present, it is assumed that a static electricity spark or a spark generated by maintenance activities in which metal strikes metal will ignite the flammable gas/vapor inside the tank. The accident consequence analysis assumes that a deflagration has two source terms. The first is the material that is aerosolized during the initial deflagration. The second part of the source term comes from the assumption that contents of the tank in which the deflagration occurs are released to the canyon cell floor to add an evaporative source term to the original aerosol source term. However, the radioactive material aerosolized in the deflagration is assumed to escape to the canyon atmosphere through the passive vents that are on the process vessels. Once the airborne aerosol is released to the canyon atmosphere, it is transported by the canyon exhaust system through the sand filter where a portion of the radioactive material is released to the environment through the exhaust stack.

The actual reaction expected to occur is a deflagration because of the large volume in the process vessels. However, the consequences from a deflagration in the canyon and OF–H process vessels are modeled based on a hydrogen detonation model. Ammonia and organic contributions to deflagration are bounded by the stoichiometric hydrogen detonation model used. The actual model used is a tri–nitro toluene (TNT) equivalent model in which the energy from the postulated hydrogen detonation involving a stoichiometric hydrogen-air mixture is converted to pounds equivalent TNT. The amount of radioactive material solution released is equivalent to the pounds of TNT identified in the TNT equivalent model. Since the detonation model used in the consequence calculations will give a much larger release of the radioactive material than that from a deflagration, the consequences of the deflagration are very conservative to all receptors.

Hydrogen in either Dissolver 6.1D or 6.4D is generated by the chemical reaction between the aluminum and the nitric acid. The hydrogen generated is maintained to less than 60% of the LFL of a hydrogen offgas mixture by the dissolver sparge/purge air system. The purge air system sweeps the hydrogen and other gases evolved during the target dissolution out the dissolver offgas system. The SS dissolver Low Air Purge Steam Interlock will shut down the steam supply if the air purge flow rate drops below a certain setpoint. When the heat is removed, the chemical reactions and, therefore, hydrogen evolution stops. The dissolver offgas does not go through the sand filters. Instead, it goes directly out the stack as an unfiltered release. In the Extremely Unlikely event that a hydrogen deflagration were to occur in the dissolver during dissolving operations, the force of the deflagration would lift the dissolver charging hatch enough to release the pressures generated by the deflagration. The charging hatch, a DF of the dissolver, is not bolted down and has a much greater surface area than the dissolver offgas nozzle does. Because of this much larger area and the loose fit of the hatch in the dissolver body, the deflagration pressure will cause the hatch to lift releasing the pressure to the canyon cell. It is estimated that the dissolver charging hatch will lift and relieve the internal pressure on the dissolver when an internal force of 1 psi is applied to the dissolver charging hatch. Since most of the force of the deflagration will be released to the canyon cell through the dissolver charging hatch, the majority of the radionuclides released as an aerosol will also be released through the hatch. Since these radioactive particles will be in the canyon exhaust air stream and filtered by the Sand Filter, a hydrogen deflagration in the dissolver will not result in a major unfiltered radioactive material release.

8.3.2.2.3.2 Preventive and Mitigative Features

The passive, engineered features that prevent a deflagration are the process vessel and electrical system designs. Process vessels are designed to eliminate spark/ignition sources inside the tanks and to provide a passive vent system that allows any flammable gas/vapor generated in the vessel to escape to the canyon atmosphere. The electrical system design places the motors, wires, and electrical connections outside the tanks. The wires are in conduit or electrical junction boxes rated for NFPA 70 Class I Division 2 Group D atmospheres. Motors are rated for this same service. While the canyon electric jumpers are not rated to any particular national standard, they are designed to be resistant to electrical sparks. The process vessel and canyon electrical system design, although passive DFs, are specifically identified as additional levels of control to prevent a deflagration in all the canyon process vessels. The DFs section of the H–Canyon TSR identifies the process vessel design as preventing deflagrations by venting hydrogen and the canyon electrical system design as preventing explosions or deflagrations and organic fires by suppressing electrical sparks. Passive DFs that mitigate the consequences of a deflagration are the H–Canyon building structure and the process vessel construction.

The TSRs contain controls to limit the hydrogen in the evaporators and dissolvers during non-operation, and all other vessels to 25% of the CLFL of a flammable gas/vapor–air mixture. For clarification, the LFL is assumed to be 4 vol. % H_2, which is the LFL of a hydrogen–dry air mixture in those areas where radiolytically generated H_2 is a concern. During waste neutralization, the flammable gas/vapor is a mixture of hydrogen and ammonia, which is maintained less than or equal to 25% of the CLFL. In the decanters the flammable gas/vapor is a mixture of hydrogen and n-paraffin, which is maintained less than or equal to 25% of the CLFL.

Tank decanters are the only area in the canyon that can potentially have a flammability vapor issue with solvent and radiolytically generated hydrogen. There are four areas in the H-Canyon which contain measurable quantities of solvent; solvent washing and storage, mixer-settlers, tank decanters, and box decanters. The only vapor space associated with the mixer-settlers (chimneys) is and box decanters is insignificant (Ref. 158). The source term used for determining the hydrogen generation rates for solvent washing and storage, based on the SAR quantities, is on the same order of magnitude as uranium solutions. A calculation shows that the hydrogen generation rate is negligible and can be ignored in the contribution to a CLFL (Ref. 101). Therefore, the only controls required for mixer-settlers, solvent washing and storage is the temperature control to ensure the tank contents remain below the flash point of the diluent in the solvent or 90 degrees C.

The radionuclide concentration and the nitric acid (nitrate ion) concentration determine the hydrogen generation rate from the radiolysis of water. For a given source term, the hydrogen generated by radiolysis increases as the nitric acid concentration or molarity decreases. If the PVV system becomes inoperable, the minimum time it will take to reach the 1 vol. % hydrogen level is 16 hours based on the smallest tank (Ref. 101). With the radiolytic generation of hydrogen and waste neutralization generation of ammonia, a conservative time to 25% of the CLFL is 9 hours (Ref. 90). With the radiolytic generation of hydrogen and with the presence of organic vapor, a conservative time to 25% of the CLFL is 19 hours (Ref. 100). Therefore, the TSR was modified to reflect the shortest time (9 hours) necessary to restore the PVV system to an operational status or to take other compensatory measures. The generation of ammonia is

limited by restricting the ammonia in neutralized waste solutions to less than or equal to 1500 mg/L. The organic contribution to the CLFL during and after the neutralization of waste solutions is reduced to negligible quantities by processing waste that has been in contact with organic solutions through an evaporator prior to neutralization.

The SS engineered control for the dissolver that prevents a deflagration is the dissolver Purge System and the Low Air Purge/Steam Interlock that stops the dissolution reaction by closing the steam valve if the purge rate is too low. The minimum required purge rate is 40 standard cubic feet per minute (scfm) (2,400 scfh) for either dissolver, regardless of size. This rate was established based on experimental studies that indicated gases generated by aluminum dissolution in nitric acid contain hydrogen concentrations greater than the LFL. The 40 scfm (2,400 scfh) rate is the minimum required to maintain the hydrogen concentration in Dissolver 6.4D and Dissolver 6.1D to less than 60% of the LFL (Ref. 119). DiD is provided by air inleakage into the dissolver around the charging port hatches (due to the dissolver off–gas vacuum) that further reduces the hydrogen concentration. The dissolver off–gas system removes the diluted hydrogen gas from the dissolver but this function is not considered a DSA control. Dissolver purge system interlock failure requires compensatory actions to include stopping steam flow to the dissolver. These actions are described in the H–Canyon TSRs and implemented in operating procedures.

The Low Air Purge/Steam Interlock is an active automatic system that shuts down the dissolving operations and therefore the H_2 generation. Because this is an automatic feature, NPFA 69 allows H_2 accumulation up to 60% of the LFL when the interlock is active and active dissolution (i.e., steam is applied to the dissolver heating coils) is occurring. Note that the 60% limit only applies during dissolver operation. If the dissolver is used to temporarily store radioactive solutions in which H_2 is generated by radiolysis, then the limit of 25% of the LFL must be maintained. When the dissolver is used for temporary storage of solutions (i.e., active dissolution is not occurring), the LFL is assumed to be 4 vol. % H_2 in the dissolver. However, during active dissolution operations, the LFL increases (see below) based on the evolved off–gas mixture.

The 40 scfm purge air flow rate noted above protects against exceeding 60% of the LFL in the dissolver during operation if no more than 72 scfm of off–gases are generated during the dissolving process. The off–gas generation rate is based on several things, but primarily is controlled by the wetted surface area of the aluminum–uranium fuel being dissolved, the nitric acid concentration in the dissolver, and the mercury catalyst concentration. Exceeding the values or limits of any of the parameters, particularly the mercury concentration, used in the calculation (Ref. 119) to determine the 72 scfm could increase the evolved off–gas flow rate. An increased off–gas flow rate could contain sufficient H_2 such that the 40 scfm purge air flow rate would not maintain 60% of the LFL during normal dissolution operations. Additionally, any other material to be dissolved that was not analyzed in Reference 119 could exceed the 72 scfm of evolved off–gas. Therefore, the maximum 72 scfm of evolved gas must be maintained during normal dissolution operations. An AC to ensure that the H_2 concentration in the dissolver off gas system remains at or below 60% of the LFL when dissolving fuel is to establish, via an approved calculation, maximum limits for the submerged (wetted) surface of the fuel being dissolved, the

nitric acid concentration, and the mercury catalyst concentration that will limit the off–gases evolved during the dissolution process to a maximum of 72 scfm.

An additional control that will prevent exceeding the LFL in the dissolver is an AC that prevents excessive hydrogen evolution during dissolving operations and from radiolysis is the minimum limit of 0.3M nitric acid. During dissolution operations, the minimum nitric acid concentration prevents a weak acid solution in which the H_2 generation reactions become dominant over the other reactions which generate primarily NO_x in the off–gas. During the time radioactive solutions are stored in the dissolver, the minimum nitric acid concentration prevents excessive H_2 generation from the radiolysis of water by the scavenging effects of the nitrate ions in the solution.

During active dissolution, there is essentially no LFL in the dissolver itself because the water vapor in the dissolver vapor space inerts the atmosphere so that under the conceivable conditions a hydrogen deflagration is not a credible scenario. Additional information on water vapor inerting is in Reference 123. However, downstream of the dissolver condenser in the dissolver off–gas system where much of the water vapor and some of the NO_x are removed by the condenser, a LFL must be established.

The dissolver off–gas stream is composed of varying amounts of H_2, NO, NO_2, N_2O, N_2, N_2O_4, and H_2O from the dissolution reactions and air from inleakage and the intentionally added purge (dilution) air. The composition of these gases from the dissolution is a function of the design and operation of the dissolver system. The off–gas composition for the H–Canyon dissolvers is based on the TNX semi–works scale development program, which defined the equipment and operating parameters for the H–Canyon dissolvers. Hydrogen and other components of the off–gas were measured during the fuel processing development tests to form the basis for the knowledge of the off–gas composition. Off–gas compositions reported for laboratory testing, as well as INEEL fuel dissolvers, were consistent with the compositions reported for the semi–works testing for nitric acid aluminum dissolution.

An evaluation of the literature on LFL found actual flammability tests were performed for a gas composition that matches the off–gas that is generated during the dissolution of aluminum with nitric acid (Ref. 119). The flammability data for the H_2–NO–N_2O–Air gas mixture showed that the mixture can have LFLs significantly higher than that for the two component H_2–Air system (4 vol.% H_2), previously used to define purge air requirements. This flammability data was produced by the Bureau of Mines for the INEEL fuel reprocessing facility. The INEEL facility used the information for the analysis of operational hazards. The gas mixture is unique in that two of the oxidants, NO and Air, react in a non–combustible reaction to produce NO_2, which acts as a combustion inhibitor. The resulting flammability mixture shows LFLs greater than 7 vol.% H_2 over a wide range of compositions. The dissolver off–gas compositions including dilution purge air defined for the dissolution operations in the H–Canyon dissolvers were found to fall within this higher LFL region.

Based on the similarity of the literature data and the INEEL fuel dissolution off–gas data to that from the H–Canyon dissolvers, a calculation was completed to determine the temperature attenuated LFL for the H–Canyon dissolver off–gas system. It was determined that for selected processing conditions (e.g., four overpacked Mk–22 fuel bundles, up to 7 vol. % H_2 in the off–

gas and a maximum evolved off–gas rate of 72 scfm) the LFL in the off–gas system was increased significantly. After the high temperature effects were included, the LFL was determined to be greater than 11.5 vol.% H_2 (Ref. 119). The temperature attenuated LFL in the dissolver off–gas system (and in the dissolver) is at least 11.5 vol.% H_2 based on the water vapor and other gases in the system. Reference 119 also demonstrated that a purge air flow rate of 40 scfm was sufficient to maintain 60% of the LFL during normal dissolution operations. The purge air calculation is conservative since no credit has been taken for additional flame inhibition from the water vapor, N_2, and NO_2 produced from aluminum dissolution.

Systems that mitigate the consequences of a hydrogen deflagration in a dissolver include the canyon building structure and the canyon exhaust system (Exhaust Air Tunnel, Sand Filters, Canyon Exhaust/Supply Fan Interlock, 254–19H Generators, Canyon Exhaust Fans (including Fan Damper Air System), the 254–19H/292–H Building Structure, and the 291–H Stack and Stack Liner). An AC that mitigates the consequences of a hydrogen deflagration is the Structural Integrity Program. The DF that mitigates a hydrogen deflagration in Dissolver 6.4D or Dissolver 6.1D is the design of the dissolver with the charging hatch. An AC ensures that the charging hatch is not bolted, weighted or fastened down when radioactive material solutions are in the dissolver.

For those process vessels where radiolytically generated hydrogen is a concern, DFs that prevent a hydrogen deflagration are the vessel passive vent features (e.g., liquid overflow line and open nozzles).

The primary engineered control for prevention of a deflagration for canyon vessels, except the evaporators and the dissolvers during non–operation, where hydrogen generation by radiolysis is a concern, is the PVV System (SS system). Sufficient air is pulled through the vent system to prevent chemical fumes, steam, and radioactivity from escaping from the vessel into the canyons. The air pulled into the vessel vent system is filtered to remove particulate radioactivity and is then exhausted into the canyon air exhaust tunnel.

The PVV System has two 18 inch vent headers and two Filter Inlet Low Vacuum Alarms, one each in the Hot Canyon and Warm Canyon Air Exhaust Tunnels. Each canyon cell module has a wall nozzle connected to the vent header. Pipe jumpers connect the vented equipment to the wall nozzle. The Hot Canyon Vent Header connects to fiberglass Filter 7.2F. The Warm Canyon Vent Header connects to fiberglass Filter 5.7F. Both hot and warm vent headers enter section 5 of the Warm Canyon where they join and connect to the vessel vent exhausters. One exhauster runs and the other is on standby. The exhausters discharge through the Warm Canyon air exhaust tunnel to the sand filters and stack.

Determination of purge rates necessary to maintain the flammable gas/vapor at less than or equal to 25% of the CLFL indicates that the air pulled through the PVV System is greater than the minimum necessary to prevent deflagration (Ref. 90, 100, 101). Preventing the accumulation of flammable gas/vapor to greater than 25% of CLFL value effectively prevents deflagration. Field measurements were conducted to determine the airflow through the PVV jumper for typical canyon vessels connected to the PVV system. (Refs. 35 and 159).

The current engineered control for evaporators (which are vented through bubble cap trays and therefore have no air sweep) and the dissolvers (when a solution containing radioactive material is in the dissolver and there is no sparge air flow) is a continuous purge accomplished by the normal instrument air flow through the dissolver and evaporator instrument dip legs. The flowrate is based on the hydrogen generation rates in References 156 and 157. This control applies to Evaporators 6.8E, 7.6E, 7.7E, 9.1E, 9.2E, 11.3E, 17.8E, Dissolver 6.1D, and Dissolver 6.4D. The required purge air flow can be obtained by using the instrument dip leg tubes by ensuring that the air flow rate is greater than or equal to 2.3 scfh through the instrument dip legs. Air flow to these vessels is indicated by rotameters, while a loss of air flow through the instrument dip leg tubes is indicated by the Instrument Air Low Pressure Alarm in the Canyon Control Room (SS system). Because of different process conditions, Evaporators 17.2E and 17.6E do not contain solutions with high–energy gamma or high specific activity alpha emitting isotopes so hydrogen generation is not a hazard. At an air flow of 2.3 scfh, the hydrogen concentration in an evaporator will not exceed 25% of LFL within 3 days of the loss of purge air flow (Ref. 156). The hydrogen generation rates in References 101, 156, and 157 are generally based on Mk–22 fuel that has been cooled a minimum of 3,650 days. Any fuel charged to the dissolver must be verified to have hydrogen generation rates equal to or less than the 3,650 day cooled Mk–22 fuel. Ammonia generation is based on less than or equal to 1500 mg/L ammonia in neutralized waste solutions and the concentration must be verified prior to waste solution neutralization. Waste that has been in contact with organic solutions must be processed through an evaporator prior to neutralization to make the organic component negligible.

The engineered controls and ACs described for dissolvers, evaporators, and remaining canyon vessels reduce the frequency of a deflagration event from Anticipated to Extremely Unlikely. The engineered control that mitigates the consequences of a deflagration is the canyon exhaust system (including the sand filter). The availability of the exhaust system and sand filter reduces the consequences from high to low. Reducing the frequency from Anticipated to Extremely Unlikely and consequence from high to low will reduce hydrogen deflagration from Scenario Class I to IV.

The hydrogen generation rate in the A–Line and EUS storage tanks is extremely slow since uranium solutions are stored in these tanks. The slow hydrogen generation rate, combined with the passive vent features (e.g., liquid overflow lines and/or conservation vent), make it very difficult to generate enough hydrogen to exceed the LFL. The Hanford Containers, HM–Trailers or similar type containers (e.g., Consani Containers) used to store DU in OF–H are purged annually or continuously vented through a HEPA or equivalent filter to prevent excessive hydrogen buildup in the containers. Either the annual purge or the continuous venting will prevent the hydrogen concentration in these vessels from exceeding 25% of the LFL of hydrogen–air mixture. If installed, the HEPA or equivalent filters shall be inspected/replaced annually. Additionally, the absence of an active ignition source, coupled with the generation rate and passive design vent features, make the frequency of a hydrogen deflagration in the A–Line or the EUS tanks an Extremely Unlikely event. A defense-in-depth item that reduces the frequency of a hydrogen deflagration in these tanks is the RVV System. Because of the type of material and rugged construction of these tanks, these tanks are expected to withstand the pressure effects of a hydrogen deflagration without failing catastrophically. If the tank does not fail, it will mitigate the hydrogen deflagration affect by reducing the amount of radioactive

material released in the event. Additionally, it will mitigate the facility worker hazards by reducing the potential for shrapnel from a ruptured tank. Reducing the frequency of the event makes it Extremely Unlikely while the mitigative items noted reduce the consequences from high to low. This event becomes a Scenario Class IV event.

8.3.2.2.4 EXPLOSION – AMMONIUM NITRATE IN PROCESS VESSEL VENT FILTERS

The H–Canyon PHA (Ref. 8), (PHA Event VE–04) considers a potential AN explosion in the PVV filters. No passive features were identified which would prevent this event. The AN is generated through process chemical reactions at a fairly slow rate; therefore, a potential AN explosion in the PVV filters was determined to be in the Unlikely frequency category. The passive feature that mitigates the event is the canyon structure. However, significant radioactive material is expected to escape the building confinement; therefore, the consequences of this event were determined to be high to all onsite and offsite receptors. The combination of an Unlikely frequency and high consequences makes this a Scenario Class I. When the active systems and ACs (described below) are considered, the event frequency is reduced to Extremely Unlikely and the consequences to medium for all receptors. The event is reduced from a Scenario Class I to a Scenario Class III.

8.3.2.2.4.1 Release Pathways and Scenarios

During 1975, large quantities, (about 2,000 pounds) of AN were detected in the vessel vent filter systems of the canyon buildings. The presence of large quantities of AN is a potential explosion hazard. A large explosion in the PVV filter could damage the canyon and result in an unfiltered release. The hazard of AN arises from its exothermic decomposition to produce gaseous products, which under certain circumstances can lead to an explosion.

Acidic waste from the solvent extraction process is neutralized using sodium hydroxide before being transferred to the Waste Tank Farm. Ammonia gas is formed during waste neutralization by the reaction of AN with sodium hydroxide. Ammonia scrubbers located in the tank vent jumper of the waste neutralization tanks keep the ammonia gas from entering the PVV system. Water, fed to the top of the scrubber, dissolves the ammonia gas and flushes it back into the tank. Failure or inefficiency of the scrubbers would allow ammonia gas into the PVV system where it could combine with dilute nitric acid vapors to form and accumulate AN crystals on the PVV filters.

In the Separations canyons, AN explosions would most likely result from direct impact events or exposure to high temperatures. AN is not very sensitive to impact. A 30 kilobar shock wave is required to initiate a detonation; thus a rifle bullet fired into a charge will not set it off. It was determined that an impact large enough to cause AN to detonate could not occur in the Canyon. The only identified event with sufficient energy to shock/impact and explode the AN is a red oil explosion. When the active and passive preventive features and ACs are considered, the red oil explosion is an Extremely Unlikely event. The red oil event is discussed in Section 8.3.2.2.1.

Exposure to high temperatures could be from self–heating or a fire. The decomposition of pure AN was examined in detail by Reference 105 with the following results.

With the PVV fans operating normally, over 30,000 kg of pure AN could reside on the PVV filter without the AN forming an uncontrolled self–heating decomposition reaction. If the PVV fans were shut down and the AN was only able to cool from conduction, over 1,200 kg would be safe from self–heating. This assumes an initial temperature of 80°C. If a more realistic temperature of 60°C is used, 13,000 kg of AN would be safe from an uncontrolled reaction. If the PVV system were shut down and the PVV filter became completely insulated, it would take at least 40 days for AN to self–heat out of control. Again, this assumes an initial temperature of 80°C. If a more realistic temperature of 60°C is used, it would take 1.2 years until AN would rise to an unsafe temperature.

Three scenarios involving a fire in the Canyon were examined by Reference 105. These were fire in a solvent tank, fire in a cell, and fire in the vessel vent header. All of the scenarios assume that the PVV System is operating normally. If a fire in a solvent tank were to occur, a temperature increase of approximately 56°C would result. Even if the original temperature was 80°C, over 10,000 kg of AN would still be at a safe temperature.

The second fire scenario examined was a solvent fire on the cell floor. It was found that the PVV filter temperature could range from 93°C to 210°C; but would realistically be closer to 93°C due to the increased temperature decreasing the air density and flow rate of the air. This less dense air would not carry as much heat into the PVV Filter. Therefore, a solvent fire on the floor would result in the PVV filter reaching about 93°C. At this temperature, over 30,000 kg of AN would be safe from an uncontrolled reaction. Even if a more conservative stance is taken and a temperature of 152°C is used, over 2,500 kg of AN would be safe from an uncontrolled reaction.

The final scenario considered was a fire in the vessel vent header assuming that 7.5 kg of AN are burning in the header. In this case, a maximum temp of 58°C was expected to enter the filter. At this temperature over 30,000 kg of AN would be safe from an uncontrolled reaction. Even if this temperature was doubled to be conservative, over 2,500 kg of AN would be safe.

Although Reference 105 was conservative when examining possible explosion hazards of pure AN, the AN on the PVV filters is most likely in contact with impurities. AN has been shown to be less stable when it is in the presence of certain impurities (Ref. 106). It is almost certain that the AN on the PVV filters is exposed to impurities (most likely organics and radionuclides) due to normal Canyon processing.

The behavior of AN in the presence of impurities was examined in detail in Reference 107. This study examined AN fuel oil (ANFO) mixtures loaded on fiberglass filters with dust and uranyl nitrate impurities present. Tests were performed to determine under what conditions the samples would sustain detonation or be capable of a thermal runaway reaction. It was concluded that the overall loading density of ANFO (total mass of ANFO divided by the volume over which it is deposited) would have to be greater than 11 lb/ft^3. Deposition of particulate matter on the H–Canyon PVV filters has been examined in Reference 108. It reports a plugging mass of 661 lbm for one half of the filter where plugging is considered the point at which air is blocked from

flowing through the filter. The maximum loading density of particulate on the filter layers at that point will be 10.04 lb/ft^3. If it is assumed that all of the particulate loaded was ANFO, it would still be a lower loading than the amount required to sustain a detonation as reported in Reference 107. To test for thermal runaway reactions, loadings of up to 11 lb/ft^3 of ANFO were exposed to an acetylene torch for a period of over ten minutes to examine the response of ANFO when exposed to sudden high temperatures. No explosions or violent reactions were experienced. Therefore, this study suggests that even if the filter was loaded until it plugs with ANFO, it would be safe from an uncontrollable reaction or detonation from the accumulation of AN.

8.3.2.2.4.2 Preventive and Mitigative Features

AN that contains impurities starts to become unstable at temperatures of 225°F (107°C) or higher for prolonged periods of time (e.g., 48 hours). It will eventually undergo rapid decomposition. AN in the PVV system is safe because the canyon air temperature does not normally exceed 50°C. The decomposition of AN proceeds at a finite rate (even at room temperature). If no heat is removed, the temperature will increase at an ever–increasing rate until a dangerous reaction ensues. Conditions necessary for such self–heating to occur in the vessel vent filter have been calculated for normal operating conditions and for the case where ventilation is shut down and heat must be transferred by conduction alone to the walls of the filter. These calculations are summarized below.

- The volume of AN that can be contained in the PVV filter was calculated as a cylinder ($\pi r^2 h$). The PVV filter is inside a canyon vessel that is 8 feet in diameter and 15 feet 7 inches high. The inside of the vessel is divided and sealed into two separate sections, upper and lower, each approximately 7 feet 9 inches high. The packing depth of the filter material in each section is 4 feet 7 inches; the packing is located about equally distant from the top and bottom of the section. The maximum amount of AN which could be contained on the filter was calculated by multiplying the filter volume by the specific gravity of AN (1.3E+07 cm^3 x 1.7 g/cm^2) to obtain 22,200 kg.

- With PVV airflow: Under normal operating conditions the temperature of the inlet air (approximately 50°C) to the PVV filter is sufficient to prevent heating of large quantities (greater than 30,000 kg) of pure AN.

- Without PVV airflow: Self heating is not a problem with the amount of AN that can be contained in the filter for temperatures likely to occur in the canyon buildings (normally up to 50° C). The heat generated by the decomposing AN is transmitted to the PVV filter vessel walls by conduction and then to the canyon atmosphere by convection.

- Without PVV airflow: The minimum time required to heat the PVV filter to a dangerous level is at least 40 days with an initial temperature of 80°C and 1.2 years with an initial filter temperature of 60°C (which is still higher than normal canyon temperature).

Since self–heating from AN decomposition will not generate enough heat to cause the AN to explode, this initiating event is considered to be BEU, and will not be discussed further in this SAR.

Martino in X–TRT–H–00001 (Ref. 118) reviewed the factors involved in a potential AN explosion on the H–Canyon PVV Filters. This calculation determined that an accumulated mass of up to 600 kg AN on the PVV filters was safe. However, for conservatism, the safe mass in Reference 118 was limited to 545 kg AN for accumulation. Flushing is required before this limit is reached.

The AN explosion is considered to be an Extremely Unlikely event based on the two most probable initiating events. An AC used to prevent the AN explosion is the requirement to have the ammonia scrubbers on the waste tanks in use during required waste neutralization operations. The ammonia scrubbers limit the amount of AN that can be deposited on the PVV filters. Since AN accumulation on the PVV filters is a function of the number of waste batches neutralized and the amount of ammonia precursor chemicals in the waste, the ammonia scrubbers on Waste Tanks 8.4, 8.6, 9.8, and 16.1 reduce the amount of AN deposited on the PVV filters each time a waste batch is neutralized. By limiting the amount of AN deposited on the PVV filters and performing an annual calculation to determine if the PVV filters require flushing or replacing, it takes longer to accumulate a hazardous amount of AN (e.g., enough for a major explosion) on the filter. There are two exceptions to the use of a scrubber jumper. If a scrubber jumper is not able to be used or if continued use of the scrubber will overflow the tank, then the scrubber is not required and no credit will be taken for ammonia reduction in the calculation.

A large solvent fire inside the canyon, which was classified as an Unlikely event, has the potential to cause an AN explosion. This event, and the passive/active preventive and mitigative features for a large solvent fire, are discussed in Section 8.3.2.3.3. With these controls, the frequency of a large solvent fire remains in the Unlikely category. Even if a large solvent fire were to occur, additional DiD passive DFs that mitigate the heating effect on the PVV filters are the curbs between the canyon sections and the distance between the filters and the canyon cell(s) where the fire would occur. In the Hot Canyon, the PVV filter is in Section 7; the nearest solvent operation is in Section 13, a distance of about 240 feet. In the Warm Canyon, the PVV filter is in Section 5 and the nearest solvent operation is in Section 10, a distance of about 200 feet.

Based on the Extremely Unlikely frequency of the initiating events (large solvent fire or red oil explosion), the frequency of the AN explosion in the PVV system is classified as Extremely Unlikely.

The consequences associated with an AN explosion were classified as high to all receptors because of the potential to damage the canyon exhaust system and cause an unfiltered release. The consequences for an AN explosion are included in the consequence section of SAR Addendum 1.

A defense-in-depth measure that prevents an AN explosion is adding sodium nitrite to the waste tanks to destroy ferrous sulfamate and hydrazine ammonia precursors before they can react to form ammonia. Sodium nitrite is also added to raffinate solutions containing ferrous sulfamate and hydrazine in Tank 18.5 prior to evaporation in Evaporator 17.8E.

Another conservatism that is provided in the AN explosion calculations is the 95% efficiency of the ammonia scrubbers. The calculation performed to determine the amount of AN on the PVV

filters takes into account the amount of ammonia precursors present in the waste stream. This calculation takes credit for the efficiency of the ammonia scrubbers at 95% and the destruction efficiency of sodium nitrite addition. This is a conservative value; laboratory tests on the scrubbers used in Separations facilities and on the ammonia scrubbers used in the chemical industry indicate these scrubbers are typically >99% efficient in removing ammonia from the air stream passing through the scrubbers.

The engineered controls that mitigate the consequences of an AN explosion are the canyon building and exhaust system (including the sand filter). An AC that mitigates the consequences of an AN explosion is the Structural Integrity Program.

The controls ensure the frequency of the AN explosion is Extremely Unlikely and the consequences are reduced to medium for all receptors. The Scenario Class is reduced from I to III.

8.3.2.2.5 EXPLOSION – ORGANIC VAPOR DEFLAGRATION IN THE ENRICHED URANIUM STORAGE TANK OR AN A–LINE TANK VAPOR SPACE

The H–Canyon PHA (Ref. 8), (PHA Event AL–01) considers an organic vapor deflagration in the EUS or A–Line tanks to be a significant event. Passive features identified which prevent this event include no known ignition sources, the passive vents (e.g., liquid overflow lines) on the A–Line tanks, and the Conservation Vent on the EUS Tank.

Large quantities of organic material can be inadvertently introduced to the A–Line or EUS tanks if the upstream control systems that prevent transferring organic to these tanks fail. Additionally, it is assumed that small quantities (i.e., below sample detectable limits) can be transferred to and accumulate in these tanks during normal process transfers. The PHA determined an organic vapor deflagration event in these tanks was in the Unlikely frequency category. The passive feature, which prevents the event, is the tank design (liquid overflow lines or Conservation Vent). The event consequences were determined to be high to the facility worker and low to all other onsite and offsite receptors. The Unlikely frequency and high consequence combination makes this a Scenario Class I. When the active systems and ACs (described below) are considered, the event frequency is reduced to Extremely Unlikely. The consequences to the facility worker remain high. An Extremely Unlikely frequency and a high consequence reduce the event from a Scenario Class I to a Scenario Class II.

8.3.2.2.5.1 Release Pathways and Scenarios

Uranyl nitrate solution (UN) is produced by H–Canyon using a solvent extraction process. The UN solution is decanted in the Warm Canyon Tank 15.7. The decanter tank is designed to separate aqueous UN and any organic solvent present. After separation, the aqueous UN solution is concentrated and evaporated in Evaporator 17.2E, then transferred to B3 basin tanks, where it is sampled If the sample shows the solution to be within specifications, then the solution is transferred to the A–Line facility. Even though the UN and solvent naturally separate into two distinct phases in the decanter and Tank 14.5, small amounts of solvent will be

entrained in the UN solution. Although tests have shown that evaporation will readily strip any dissolved TBP, this analysis assumes that steam stripping is not performed. Storing UN solution for long periods allows the entrained solvent to separate from the UN solution. If sufficient heat is applied to the tank contents, the solvent will evaporate creating an organic vapor–air mixture in the tank. If the organic vapor concentration reaches or exceeds the LFL of the organic vapor–air mixture, the vapors could be ignited. The most probable scenario is the vapors will burn rapidly creating a vapor phase deflagration. A detonation (high–energy explosion) is not expected to occur in these tanks. The inadvertent transfer to, or accumulation of, solvent in the A–line tanks is the basis for the solvent vapor deflagration scenario. From the A–Line tanks, the UN is transferred to the EUS Tank for long term storage.

8.3.2.2.5.2 Preventive and Mitigative Features

A solvent vapor deflagration requires solvent in the A–Line or EUS Tanks, heat, and an ignition source. Enough organic material must be present to vaporize and fill the vapor space in the tank to the Lower Explosive Limit (LEL). The explosive limit for an n–paraffin–air mixture ranges from 0.7 vol. % (LEL) to 7.0 vol. % (UEL) of n–paraffin vapors. The high partial vapor pressure of the n–paraffin diluent prevents reaching the LEL at normal ambient temperatures of the solution stored in the A–Line or EUS tanks. An ambient atmospheric temperature of 110ºF (43° C) will not cause enough of the n–paraffin diluent to vaporize to exceed the 0.6 vol. % LEL simply based on the n–paraffin vapor pressure. For H–Canyon process solvent (TBP–n–paraffin), the LEL can only be reached if the solvent is heated above the flashpoint of the diluent (greater than 90° C). Therefore, one control (i.e., AC 5.7.2.16.a) necessary to prevent a solvent vapor deflagration is a control that ensures the solvent temperature does not exceed the minimum flashpoint of 90° C. The only method available to heat the tank contents above 90° C is steam heat. To prevent overheating any organic material, the steam line for the EUS Tank Heat Exchanger (DF) has been disconnected. The only HA–Line tanks with steam heat are Tanks E1–1 and E4–2. Steam heat has been physically disconnected from the EUS Tank Heat Exchanger. The steam was removed to ensure that a criticality from fast evaporation in the EUS tank is an incredible event. The other tanks have electrical heat tracing instead of steam heat. The tanks that have electrical heat tracing for a heating mechanism cannot heat the tank contents above 90° C. Therefore, the controls in this section apply only to those tanks which use steam heating (i.e., E1–1 and E4–2). The passive features that prevent the presence of solvent in A–Line tanks are the inherent material property of aqueous and organic mixtures to separate, design of the decanter tank inside the canyon, and design of A–Line tanks. The decanter tank is designed to facilitate the natural separation of organic and aqueous phases. The A–Line tanks are designed to locate electrical systems/instruments outside the tanks. This significantly reduces the potential ignition sources inside the tanks. The remaining potential ignition source would be static electricity. Based on these passive controls, the frequency of this event is classified as Unlikely.

The TSRs contain upper temperature limits to ensure the tank temperature remains below the organic diluent flash point. Detecting and removing any organic material in these tanks prevents transferring the organic to other OF–H tanks. In addition, TBP is steam stripped to evaporator overheads in H–Canyon, which prevents it from being transferred to A–Line Tanks. If the 90° C flashpoint of the n–paraffin diluent is exceeded, a very small amount (estimated to be less than

10 gallons) of the liquid n–paraffin will generate enough vapors to exceed the LEL. Even if 10 gallons of liquid n–paraffin were the maximum amount of material necessary to exceed the LEL in a 10 foot diameter tank, this would be 0.2 inches of organic on top of the aqueous layer. An organic layer of this depth would be extremely difficult to detect using the existing inspection methods or by rodding the tank. Inspecting the tank to determine when sufficient organic is present to exceed the LEL if the flashpoint is exceeded is not a reliable and effective method to use to prevent the event.

SS systems, which prevent the solvent vapor deflagration in these tanks, are High Temperature Alarms for the steam heated E1–1, and E4–2 tanks. DFs, which prevent an organic vapor deflagration by allowing the vapors to escape before an explosive mixture is reached, are the vessel design, including the overflow lines, and the EUS Tank Conservation Vent. The RVV System is a defense-in-depth system that reduces the event frequency. This system runs continuously removing any solvent vapors in the tank. These additional controls reduce the frequency of this event to Extremely Unlikely.

It is assumed that a solvent vapor deflagration will rupture the A–Line tank in which it occurs. The double wall design and construction of the EUS Tank will not be breached in a potential deflagration, thereby mitigating the event consequences. Destructive tank failure could cause a fatal injury to nearby facility workers. Based on this assumption, the consequence class remains high to the facility worker. Defense-in-depth passive features that limit the consequences to the co–located worker and offsite population include the containment dikes and curbs, which would contain the radioactive liquid released in the event.

The combination of an Extremely Unlikely frequency and a high consequence to the facility worker reduces the Scenario Class from I to II.

8.3.2.2.6 UNCONTROLLED REACTION/FIRE – RESIN DIGESTION

The H–Canyon PHA (Ref. 8) does not address a potential uncontrolled reaction/fire involving spent resin from the ion exchange column in HB–Line Phase II. The consequences of a spent resin uncontrolled reaction/fire to offsite receptors are classified as Low. The consequences to the onsite and facility workers are classified as High. The combination of an Unlikely frequency and High consequences result in a Scenario Class I. When the passive and active systems and ACs are considered (described below), the consequences are reduced to Low for the onsite and facility workers. The event then becomes a Scenario Class III event based on an Unlikely frequency and a Low consequence.

8.3.2.2.6.1 Release Pathways and Scenarios

The spent resin uncontrolled reaction/fire scenario assumes that if the ion exchange column spent resin dries out, an exothermic reaction between the nitric acid and the resin occurs. Heat generated by the Pu–239 adsorbed on the resin heats the nitric acid and spent resin slurry. The nitric acid in the tank starts to boil and continues to boil until the liquid solution is driven off and the dry resin can spontaneously ignite.

The accident consequence analysis assumes that the spent resin was fully loaded with a maximum of 450 g total Pu. The resulting uncontrolled reaction/fire releases the 450 g total Pu to the canyon atmosphere as an airborne particulate. The spent resin uncontrolled reaction/fire will not significantly damage the canyon building structure or other SC or SS systems; therefore, the majority of the radioactive material released would remain within the confines of the canyon. Any material escaping the canyon will be exhausted through the 291–H Stack after filtration through the Sand Filters.

8.3.2.2.6.2 Preventive and Mitigative Features

Engineering calculation S–CLC–H–00845 (Ref. 38) delineates that the bounding quantity of plutonium (i.e., equal to an entire batch of 450 g total Pu being dropped to H–Canyon) does not require SC controls. The bounding amount of Pu is protected by DSA controls in HB–Line. The unmitigated release offsite is less than 5.0E–01 rem in the Anticipated frequency category for this bounding case. Therefore, SC controls are not required to protect the offsite public. Based on the bounding case, the dose to the onsite worker (i.e., 2.66E+01 rem) does not exceed the evaluation guidelines (1.0E+02 rem), therefore, SS controls are not required to protect the onsite population.

Calculation number X–CLC–H–00144 (Ref. 39) shows that even the H–Canyon bounding case scenario (i.e., 450 g Pu–239) does not appreciably increase the rate of nitric acid evaporation above that from ambient conditions. It would take approximately 45 days to reach the boiling point for a planned single batch and risk drying out the resin. If the HB–Line control was used in this calculation, the time to reach the boiling point would increase by over 10%, or an additional five days. The maximum grams of Pu–239 (i.e., total Pu of 501 g) described in the calculation is under the "ever safe" number for Pu–239 when converted to total Pu (i.e., 510 g). The heat generated is conservatively assumed to go entirely into the slurry and is not transferred to the steel tank walls, the resin, or the canyon atmosphere. Based on the length of time required to reach boiling, much less dry out the resin, other indicators would alert the operator to a potential problem with this tank. The Conduct of Operations Program and the related daily operator roundsheet readings of the liquid level in the tank is a non–credited DiD control that will reduce the frequency of the event. Other non–credited DiD measures would include the agitation provided by the liquid level and specific gravity instrument bubblers and tank vent. The net effect is a reduction in the heat of the solution, although these measures are not credited in Reference 39.

The controls that mitigate a spent resin uncontrolled reaction/fire release are essentially designed to prevent exposure to the facility and onsite workers. The H–Canyon structure confines the uncontrolled reaction/fire. An AC that mitigates the consequences of a spent resin uncontrolled reaction/fire is the Structural Integrity Program. Airborne contamination is exhausted through the H–Canyon Exhaust System. This system includes the Sand Filter, the SC 292–H Exhaust Fans (including Fan Damper Air System), H-Canyon Exhaust Vacuum/Supply Fan Interlock, and Canyon Exhaust Tunnel. These existing SC controls are not required as SC controls but are credited with the SS function of protecting the onsite and facility workers. These systems are classified as SC to remain consistent with the classification used throughout the rest of this document. Since the uncontrolled reaction or fire scenarios do not exceed the offsite safety

criteria, additional controls are not needed per WSRC Procedure Manual E7 (Ref. 14). The credited confinement and ventilation systems reduce the consequences to the onsite workers from High to Low.

There are defenses credited in the H–Canyon and HB–Line DCAs to prevent a criticality scenario in Tank 5.2. These controls are robust and satisfy the double contingency principle. None of the controls identified have resulted in any common mode equipment failure or in the identification of any specific active engineered features that are relied upon to prevent a criticality. Therefore, none of these controls are identified as SS controls. The controls that will prevent a criticality are also effective, but not credited, in preventing an anion resin fire or uncontrolled reaction in Tank 5.2 (e.g., Tank 5.2 will receive mass–controlled receipts from HB–Line not to exceed 450 g total Pu [“ever safe” CSL mass]).

Proposed use of Tank 5.2 is also bounded by the previous accident analysis for FWR operations. Previously, only the use of Pu–238 was analyzed for FWR. The proposed transfer of material into H–Canyon Tank 5.2 from HB–Line is now 450 g total Pu. With a degree of conservatism already included for the Pu–238 analysis, the use of Pu–239 (basically all of the transferred Pu from HB–Line) increases the safety posture.

When the preventive and mitigative controls identified above are considered a potential anion resin fire or uncontrolled reaction in Tank 5.2 is reduced from a Scenario Class I to a Scenario Class III event. Only the building and exhaust confinement systems are credited with reducing the consequences.

8.3.2.3 Fire

8.3.2.3.1 FIRE – ANION RESIN

Planned H–Canyon missions do not require FWR operations. Therefore, the controls described below are included in this SAR for information only, and implementation is not required. See note at start of Section 8.3.2.2.2.

The H–Canyon PHA (Ref. 8) (PHA Event IE–01) considers a loaded ion exchange column resin fire as a significant event. Passive features identified that prevent this event include the design of the column and piping, and the position of the Jackleg on the RC–16 column. The PHA determined a fire in the ion exchange column was in the Anticipated frequency category. The passive feature that mitigates the event is the canyon building structure. The consequences of this event were determined to be low to the facility worker and high to all other receptors onsite and offsite. An Anticipated frequency and high consequences makes this a Scenario Class I event. When the active systems and ACs (described below) are considered, the event frequency is reduced to Unlikely. The consequences are reduced to medium for the onsite and offsite receptors. An Unlikely frequency and a medium consequence reduce the event from a Scenario Class I to a Scenario Class II.

8.3.2.3.1.1 Release Pathways and Scenarios

There are two scenarios for a resin fire in the canyon, which result in a radioactive material release. The first scenario is a release of loaded resin from the ion exchange column and the second is a loss of solution flow to a loaded resin bed in the ion exchange column.

The first scenario can result in either unloaded resin or loaded resin being released from the column. The difference in the two is that the unloaded resin fire will result in releasing only minor amounts of contamination from the vicinity of the fire. The loaded resin will release both the radioactive material loaded on the resin plus the contamination in the vicinity of the fire. The 200 Area Fault Tree Data Bank has two entries documenting the release of resin from the F–Canyon ion exchange column during resin addition. These two entries involved the release of unloaded resin (absence of Pu) during transfer of resin to/from the column. Loaded resin (i.e., resin with a radioactive isotope loaded on it) can also be released from the RC–16 Ion Exchange Column. Both the loaded and unloaded resin released from the column can fall to the canyon floor or to the top of other vessels where it can dry out and spontaneously ignite. Since radioactive isotopes are not introduced to the ion exchange column until it has been verified that the resin level in the column is within operational limits, there are only three postulated methods to get loaded resin out of the column. The first method is by resin leaking from the column due to column failure. The second method is to eject loaded resin through the open vent at the top of the column by an uncontrolled reaction. The third method is to overflow the column with the pipe to Tank 16.1 plugged. If either loaded or unloaded resin is released from the column, it cannot start a fire unless the resin is allowed to dry out. Based on this information, the frequency of this event is classified as Anticipated.

The second scenario is a loss of flow to the resin column. Loss of liquid flow to the column could occur due to operator error, equipment failure or malfunction, jumper or piping failure, external impacts, or natural phenomena events that damage the column or piping. The 800 g of Pu–238 loaded on the column generate about 400 watts of heat. After the initiating event occurs, the accident scenario continues in three phases:

1. Heat generated by the Pu–238 heats the solution remaining in the column to boiling. The time to initiate solution boiling is calculated to be about 1.5 hours.

2. Boiling continues until the solution is gone and the resin is dry.

3. The dry nitrated resin spontaneously ignites and burns inside the ion exchange column. There is a passive vent area at the top of the column of sufficient size to relieve pressure generated by the boiling solution inside the column.

The loss of flow scenario was considered by the PHA to be an Anticipated event.

8.3.2.3.1.2 Preventive and Mitigative Features

The passive DFs that prevent a resin fire include the following:

- Design of the column and head tanks and the liquid flow system from the Third Level head tanks to the column;
- Gravity feed from head tanks located on Third Level to the column;
- Position of the jackleg on the column ensures the resin bed remains covered with solution during any temporary loss of solution flow;
- Vessel and piping design prevents resin from spilling to the canyon floor or to the tops of other canyon vessels.

Active controls that prevent an ion exchange fire include the RC–16 Column Temperature Measurement and High Temperature Alarm and the RC–16 Column Level Transmitter and High Level Alarm.

The ACs given in Section 8.3.2.2.2 for prevention of an Anion Resin Explosion also prevent an Anion Resin Fire. ACs that prevent the event include the Emergency Response Procedures to a liquid flow loss to the column. Other ACs include the following:

1. Resin bed temperature limits,

2. A 15–minute flow interruption time limit when Pu–238 is loaded on the column, and

3. Resin specifications to include controls on what type acid and concentration (e.g., <9M nitric acid) which can contact the resin.

These controls reduce the event frequency from the Anticipated category to the Unlikely category for both resin fire scenarios. The consequences of a loaded (Pu present) resin fire to offsite and onsite receptors are classified as high. The consequences to a facility worker are low.

Engineered features that mitigate the resin fire consequences include the canyon building (passive feature), the Canyon Exhaust System (including, the Sand Filter, Stack and Stack Liner, and Fan Damper Air System) and the liquid level detection transmitter and chart recorder on Tank 16.4. ACs, for example, include the verification of Pu removal from the resin before the resin is removed from the column and the 800 g Pu–238 resin column loading limit. These controls reduce the resin fire consequences to the offsite and onsite receptors from high to medium. The combination of an Unlikely frequency and a medium consequence reduces the Scenario Class from I to II.

8.3.2.3.2 EARTHQUAKE – INDUCED RESIN FIRE OR EXPLOSION IN FRAME WASTE RECOVERY

Planned H–Canyon missions do not require FWR operations. Therefore, the controls described below are included in this SAR for information only, and implementation is not required. See note in Section 8.3.2.2.2.

The H–Canyon PHA (Ref. 8), (PHA Event HC–11) considers an earthquake induced resin fire due to a loss of liquid flow to the loaded column or an explosion in the FWR ion exchange column to be a significant event. Passive features identified which prevent this event include the column and piping design, the open vent area on the top of the column, and the jackleg position on the RC–16 column. The PHA determined an ion exchange column fire or explosion after an earthquake was in the Unlikely frequency category. The passive feature that mitigates the event is the canyon building structure. The event consequences were determined to be low to the facility worker and high to all other receptors onsite and offsite. The combination of an Unlikely frequency and high consequences makes this a Scenario Class I event. When the active systems and ACs (described below) are considered, the event frequency becomes BEU.

8.3.2.3.2.1 Release Pathways and Scenarios

The postulated event has a 0.2g horizontal ground motion (Blume) DBE as the event initiator. It is assumed that the canyon exhaust system is unavailable to mitigate the consequences of earthquake induced events for 48 hours after the earthquake. Except for the stack liner, the canyon exhaust system will withstand a DBE. The canyon exhaust system is conservatively assumed to be unavailable for up to 48 hours after a DBE because of the expected collapse of the brick stack liner. If the stack liner collapses, actions may have to be initiated to allow airflow through the exhaust system (e.g., remove rubble from the exhaust stack or open the stack plenum ports). It is assumed that the canyon building will remain intact with only minor cracks after a DBE.

Two potential scenarios were considered for an earthquake–induced resin fire. Both scenarios are the same as the ion exchange fire described in the previous section. The initiating event is the only difference in this scenario and the anion resin fire described earlier. The first scenario involves an event in which the resin is released from the ion exchange column, dries out, and spontaneously ignites. The resin can be released from the column if the column overturns and fails structurally, or if material is released from the column by some other mechanism. The seismic analyses, S–CLC–H–00274 (Ref. 40), show that this scenario will not occur; therefore, it is not considered further in this evaluation. The second scenario is a situation where the resin column remains intact and upright but there is a loss of liquid flow to the column when the column is loaded with 800 g of Pu–238. The 800 g of Pu–238 loaded on the column generate about 400 watts of heat. This scenario occurs in three phases:

1. Heat generated by the Pu–238 heats the solution in the column to boiling. The time to initiate boiling of solution in the ion exchange column is calculated to be about 1.5 hours (Ref. 34).

2. Boiling continues until the solution is gone and the resin is dry.

3. The dry nitrated resin spontaneously ignites and burns inside the stainless steel ion exchange column. Therefore, if solution flow is restored to the resin bed within 1.5 hours of the loss of liquid flow to the column, a resin fire will be prevented.

The resin can explode if the loaded resin is allowed to dry out. The two resin explosion scenarios described in Section 8.3.2.2 are the same explosions that can occur after an earthquake. However, it is probable that a resin fire will occur before the resin explodes after an earthquake. The controls that will prevent or mitigate an earthquake–induced resin fire will also prevent or mitigate a potential explosion after an earthquake.

8.3.2.3.2.2 Preventive and Mitigative Features

Passive DFs that prevent this event include the Ion Exchange Column and Hot Canyon process vessels, the Elution Solution Head Tank (18A), and associated piping and valves. These features ensure the resin remains in the column and that a flow path remains open for the elution solution. However, these DFs do not ensure the column is supplied with the elution solution. This is a significant post earthquake facility worker action implemented by ACs in the emergency response procedure.

SC preventive systems for this event include:

- Structural features of Resin Column RC–16 and associated piping which makes them seismically qualified.
- Structural features of Head Tank 18A and associated piping and valves to the RC–16 anion exchange resin column, which makes them seismically qualified.

SS preventive systems for this event include:

- RC–16 Column Temperature Measurement and High Temperature Alarm.
- RC–16 Column Liquid Level Transmitter and High Level Alarm.

The ACs given in Section 8.3.2.2.2 for prevention of an Anion Resin Explosion also prevent an Anion Resin Fire. ACs that prevent this event include:

- Limiting the maximum number of ion exchange runs to 144 per calendar year.
- A dedicated seismic emergency response procedure to ensure the eluant supply is provided or restored to the ion exchange column after a seismic event.
- Operating procedures require Wall Nozzle Valve 23A (16H) and Tank Valve 18A–3 remain in the open position at all times when Pu–238 is loaded on the resin column.
- Additional ACs are delineated in Table 8.3–2 of this SAR that are designated as preventive ACs.

These ACs are designed to ensure that the column remains wet and, if necessary, to elute the Pu–238 from the column and eliminate the hazard. The ACs, SC and SS systems, and DFs documented in Table 8.3–2 as event preventers were determined to be sufficient to reduce the frequency of an earthquake resin fire from Unlikely to BEU (Ref. 40).

The passive engineered features that mitigate the consequences of this event are the canyon building structure. No additional mitigative control discussion is required since this is a BEU event. The preventive controls identified above make the event BEU. This event has been reduced from a Scenario Class I event to a BEU event.

8.3.2.3.3 FIRE – ORGANIC OR SOLVENT MATERIAL

The H–Canyon PHA (Ref. 8) (PHA Events SE–01, SE–02, SE–03, RR–01, WD–01, SS–02, FO–11, LS–1, FO–12a and NU–1) consider a fire involving solvent or other organic material in either H–Canyon or OF–H to be a significant event. Passive features identified in the PHA which prevent this event include the process vessel design, and the design and construction of the canyon and OF–H electrical systems. The H–Canyon PHA determined a solvent fire to be in the Unlikely frequency category. The passive feature that mitigates the event is the canyon building structure and the canyon cell design. The consequences of this event were determined to be low to the facility worker for a fire inside the canyon and medium to the facility worker for a fire in OF–H. For the co–located worker and offsite public the canyon fire is considered to have high consequences from a solvent extraction fire and medium consequences from a fire in Rerun or Waste Disposal Operations. A fire in OF–H will have medium consequences to all receptors. The combination of an Unlikely frequency and high consequences makes this a Scenario Class I event for solvent extraction. An Unlikely frequency and medium consequences make this a Scenario Class II event for Rerun, Waste Disposal and OF–H.

H-Canyon has in its inventory several sealed radioactive sources that are tracked in the Sealed Radioactive Source Database. These sources are not specifically identified as source terms in the H-Canyon SAR. An evaluation was conducted (Ref. 129) that shows a very conservative treatment of the sources does not significantly increase the amount of radioactive material released from the H-Canyon analyzed in a solvent fire event in either First or Second Cycle (i.e., the only events in which a sealed source could be anticipated to fail).

Appendix H of the H-Canyon PHA determined that a fire could be in the Unlikely frequency category. The chemical consequences of this fire scenario were determined to be low to the offsite and onsite receptors and medium to the facility worker. The radiological consequences for a fire were low to all receptors. The combination of an Unlikely frequency and medium chemical consequences makes this a Scenario Class II event for HEU Blend Down facility worker.

When the active systems and ACs (described below) are considered, the event frequency remains Unlikely. The H–Canyon PHA consequences are reduced to medium for the co–located worker and offsite public for solvent extraction operations and to low for Rerun, Waste Disposal, and OF–H. An Unlikely frequency and a medium consequence reduce the solvent extraction fire event from a Scenario Class I to a Scenario Class II. An Unlikely frequency and low consequences reduce a fire event in Rerun, Waste Disposal, and OF–H from a Scenario Class II to a Scenario Class III. Appendix H of the H-Canyon PHA chemical consequences are reduced to low for the facility worker when the ACs (described below) are considered. An Unlikely frequency and low consequences reduce the HEU events from Scenario Class II to III.

Additional controls are described in the Wildland Fire scenario that would further reduce the external fire (i.e., caused by a wildland/brush fire) to Scenario Class IV (see Section 8.3.2.3.4).

An HEU Blend Down Project event (FO–12a) postulated a tanker truck carrying flammable liquid impacting A–Line storage or transfer tanks. The spilled flammable liquid and truck fuel ignite and supply sufficient heat to cause significant boiling of the aqueous liquids in the A–Line tanks. Excessive boil off of the liquid in the A–Line Tanks could cause the concentration CSL to be exceeded, which could result in a fire induced criticality. A frequency calculation was generated to determine if the event was credible. Calculation S–CLC–H–00928 (Ref. 41) concluded that a large organic fire in or near the A–Line Tanks has a frequency of 2.7E–08/year and that a fire induced criticality is a BEU event.

8.3.2.3.3.1 Release Pathways and Scenarios

The occurrence of a solvent fire in either H–Canyon or OF–H assumes that solvent is present, the solvent is heated above the specified n–paraffin flash point of 90° C, and an ignition source is present. The WSRC procurement specifications call for a minimum flash point of 90° C for the n–paraffin diluent purchased for use on SRS. The actual material received has a closed cup flash point of 97° C per the Material Safety Data Sheet sent with the material. The primary heat source in both the canyon and OF–H is steam, which can heat the solvent above its flash point but not above the pure n–paraffin autoignition temperature of 230° C. The liquid solvent will not burn; however, the vapor will burn vigorously. The most credible solvent fire scenario is thought to be the release of overheated solvent from primary confinement (process vessels, tanks, and piping) in the presence of an ignition or heat source. As the solvent burns, any radioactive material in the solvent is vaporized and released in the smoke from the fire. Additionally, if an aqueous layer is present, the burning solvent will cause some of the radioactive material in the aqueous layer to volatilize and be released. In the canyon, the vaporized material is transported by the canyon ventilation system through the sand filter and out the exhaust stack. For a fire in OF–H, the radioactive material is released as an unfiltered, ground level release.

A fire in the vessels is considered a BEU event due to the lack of an ignition source and limited vapor space in the vessels.

8.3.2.3.3.2 Description of a Potential Fire in First Cycle Solvent Extraction

Figure 8.3–1 shows the two potential solvent fire scenario initiating events for the First Solvent Extraction Cycle. The original SAR fire accident analysis assumed heated solvent could occur anywhere in the First Cycle and overheating a single feed stream (either solvent or aqueous) to the banks would overheat the solvent in the bank and cause a fire if the solvent was released from primary confinement. Scenario 1 schematically shows one initiating event for the existing SAR and the previous SAR analyzed solvent fire accident. For this scenario, the words “mixer–settler” can be replaced with process vessel and this scenario will apply to the generic solvent fire description given above. The description and analysis that follows specifically are for the

First Cycle for the first scenario. However, they are applicable to the Second Solvent Extraction Cycles as well.

The second scenario is specific to the solvent extraction cycles only. Again it is described in terms of the First Cycle but is applicable to the Second Solvent Extraction Cycles as well. It is another initiating event for the original BIO solvent fire. The difference between this scenario and the original BIO accident analysis is that the original BIO analysis assumed a single overheated stream would cause a solvent fire, whereas the second scenario described in Figure 8.3–1 assumes more than one feed stream has to be overheated to overheat the solvent in the bank. The second scenario is based on calculations, SE–970008 (Ref. 42), that show that at least two (e.g., 1BS and 1BX) feed streams have to be overheated to overheat the bulk liquid and therefore the solvent in the banks.

The following event description is not meant to imply that the original BIO and SAR accident analysis which assumed only one feed stream had to be overheated to overheat the solvent in the bank is incorrect. The following description shows how the two different initiating events are subsets of the original BIO scenario.

The first scenario involves heating a single solvent stream to a temperature at or above the flash point, releasing the hot solvent stream, creating a flammable vapor concentration, and igniting the vapor by an unidentified ignition source. It is assumed that there is no credible fire scenario inside any of the process vessels, especially the mixer–settlers. This assumption is made because a credible ignition source inside the process vessels is highly improbable. The mixer–settlers are completely full of liquid during operation and a vapor space does not exist. The only credible fire scenario is one in which the hot solvent is released to the canyon cells outside the primary confinement of the process vessels and piping.

The analysis concerns fires of two sizes, differing by the amount of solvent available as fuel. One is the large "SAR fire" analyzed in the addenda to this SAR. The other fire is a smaller fire that affects only part of the solvent available in any particular process. The SAR fire bounds the smaller fires in terms of consequence. For example, the First Cycle source term used in the consequence analysis given in Addendum 1 is based on releasing 37,350 pounds of solvent from the 1A Bank onto the cell floor as noted in S–CLC–H–00289 (Ref. 43). Additionally one full tank of 1AF feed from Tank 12.3 or 65,410 pounds is released to the cell floor. The solvent has a source term based on extracted neptunium, uranium, and some fission products of 0.29 Ci/lb. The 1AF feed source term is based on SRS reactor fuel that has been exposed for 1,200 megawatt days per assembly and cooled for 2,500 days before it is charged to the dissolver. The 1AF source term has been concentrated to the maximum solubility limit of aluminum nitrate and contains 364 Ci/lb. The source terms, which are additive in the consequence calculations, are the maximum possible limits that can be achieved.

For the SAR fire, it is assumed that either or both of the aqueous and solvent source terms are instantly released to the canyon cell floor. If both organic solvent and an aqueous solution are released, the solvent and aqueous separate into layers and the solvent ignites. The fire is assumed to burn all the organic solvent and, boil all the aqueous solution, if present. No specific time is given in the SAR accident consequence calculation for how long the fire will burn (e.g., less than or greater than two hours). However, the consequence analysis assumes the

radionuclides are released over a 30–minute period. This assumes the fire burns with enough intensity to consume all the solvent and releases the maximum amount of radionuclides to the canyon atmosphere.

In the case where the "process vessel" is the mixer–settler, the solvent feed stream to the mixer–settler banks, which originates in the canyon Third Level head tanks, flows through the mixer–settler, and is released to the canyon cell. The accident analysis assumes that the solvent feed stream is released from the 1A Mixer–Settler bank. The 1A Bank was chosen because it has the highest source term of the three banks in the First Cycle.

Assuming all the liquid (source term) above is released; then, for the SAR fire to occur, two other conditions must be present. The first is that the n–paraffin must volatilize and form enough vapors to exceed the LFL of the n–paraffin vapor–air mixture. There is also an upper flammability limit for the n–paraffin vapors. The flammability range for n–paraffin vapors in air is from 0.7 to 7.0 vol. %.

The second condition that must occur is that a credible ignition source must be available to ignite the solvent. The autoignition temperature of the n–paraffin is approximately 230° C (from the original H–Canyon SAR). There is no known heat source in the canyon cell or in the heat exchanger for the solvent stream that will heat the solvent to its autoignition temperature. The heat exchanger uses 15 psig saturated steam as a heat source with a temperature of approximately 122° C, which is well below the autoignition temperature. Even if the 150 psig steam used in the transfer jets is available, this steam has a temperature of approximately 185° C still well below the autoignition temperature of 230° C. Therefore, there does not appear to be any reliable heat source capable of heating the solvent to or above its autoignition temperature.

Another potential ignition source is an electrical spark. A single static electricity spark is an unlikely initiator since water vapor will also be present in the solvent vapor. The electric motors and other electrical connections are located on top of the process equipment (including the mixer–settlers) and are well above the solvent liquid pool. Since the solvent vapors are heavier than air, they will not rise and the canyon exhaust that sweeps across the cell will tend to pull them down to and out the bottom of the cell. Additionally the motors and other electrical equipment are rated as NFPA 70 Class I Division 2 Group D equipment. This is equipment designed and manufactured to suppress electrical sparks during operation and is rated for use in the canyon atmosphere. For the Stack Liner collapse scenario, an analysis was completed to see if an electrical jumper would start a solvent fire. This analysis assumed the longest electrical jumper used in the canyon was broken off at its worst point (connector closest to the process vessel) and all the bends in the jumper were straightened out so the jumper hung straight down toward the cell floor. It was shown that the ends of any wire protruding from the jumper would be at least 12 inches above the height of the dikes at the cell ends, and therefore, the top of the solvent layer. It was concluded that this situation would not cause an electrical spark to start a solvent fire.

As indicated above, there does not appear to be any credible sources to ignite any spilled solvent anywhere in the canyon or near the First Cycle mixer–settler banks. However, S–CLC–H–00646 (Ref. 44) assumed there is a 1.2E–3/demand probability that an unknown and unidentified

ignition source is available to start a solvent fire. Therefore, it is assumed that some unidentified ignition source will ignite any spilled solvent that is at or above its flashpoint.

It is assumed that if the solvent is not heated to or above its flashpoint and an ignition source is available, a solvent fire will not occur. "Cool" solvent released from primary confinement will be treated in the accident analysis as a spill or inadvertent transfer rather than a fire event.

The description given for the first initiating fire scenario in Figure 8.3–1 describes the large "SAR Fire" and the smaller solvent fire described in Reference 44. This smaller fire requires a single overheated solvent feed stream be fed to the mixer–settler (or any other process vessel). The reference shows that the fire analyzed in SAR Addendum 1 bounds the smaller fire in terms of consequence. The only difference in the two fires is the size of the source term. Both fires release radioactive material over a two–hour period. The fire analyzed in Reference 44 has a much smaller source term than the large SAR fire (Ref. 43) because the mass of material is less. The source term is a function of material (solution) concentration and mass. Both analyses use the same radionuclide concentrations in the solvent and aqueous streams, but the mass of material released in the large SAR fire is more than an order of magnitude greater than the mass released in the smaller fire. The small fire is more likely to occur than the large SAR fire. A conservative estimate would be that the small fire would be an order of magnitude more frequent than the large fire.

Based on the unmitigated consequences of the large SAR fire and the expected Unlikely frequency of this fire, controls are required to prevent or mitigate the event. The unmitigated consequences of the large SAR fire exceed the DOE guidelines for determining if SC controls are required to prevent or mitigate the fire. The canyon building structure and the canyon exhaust system are designated as SC systems to mitigate other events that can occur in the canyon. The SAR consequence analysis takes credit for the Sand Filter as a SC system to mitigate a solvent fire. The Sand Filter brings the accident consequences below the DOE guidelines for determining if controls are required. However, the WSRC Procedure Manual E7 (Ref. 14) requires another level of control be added when a SC control is used. WSRC chose a preventer as the secondary level of control for a solvent fire. This secondary level of control is the temperature monitor interlock on all the feed streams to the mixer–settlers.

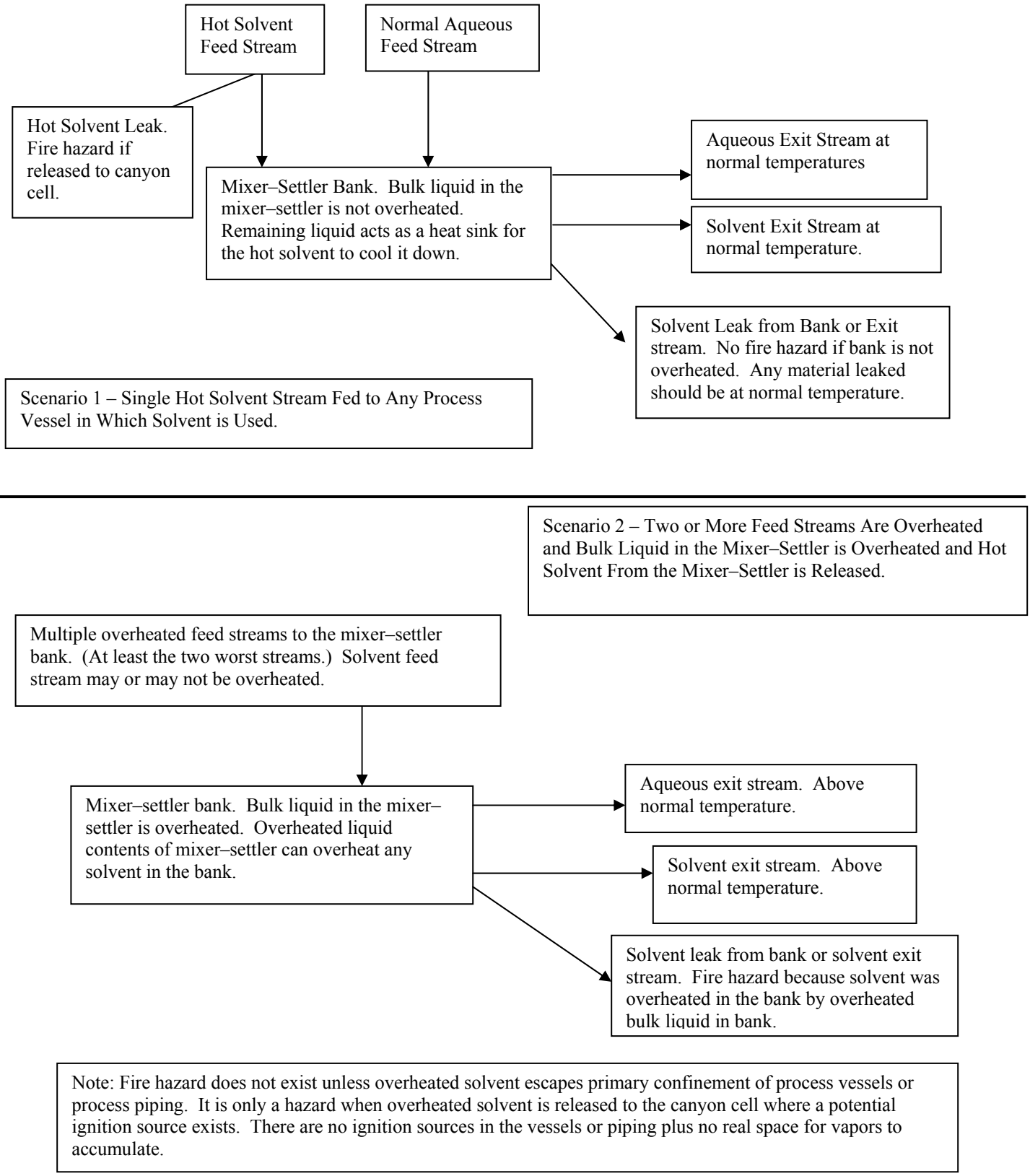

Figure 8.3–1 Solvent Fire Initiating Scenarios for the First Solvent Extraction Cycle

Reference 44, which uses maximum concentration solutions and releases less mass, shows that neither SC nor SS controls are required to prevent or mitigate the small solvent fire. The calculation results in Reference 44 do not negate the requirements to provide appropriate controls to prevent or mitigate the large fire analyzed in the SAR addendum. Controls are required because the analysis has not been completed to prove that the large fire analyzed in the SAR addendum is a BEU event. The controls must be applied to prevent or mitigate the SAR event. Note that using temperature controls on the solvent feed stream will also serve as a preventer for the small fire analyzed in Reference 44 thereby lowering the expected frequency of this fire.

The second scenario described in Figure 8.3–1 is a subset of the original single stream accident analysis. The only difference is the initiating event for overheating the solvent. In the first scenario, it is assumed that a single solvent stream can be overheated in components external to or in the actual canyon process vessels. In addition to thermally hot feed streams to the canyon process vessels, the vessels may have other heat sources (e.g., steam or hot water coils). In those cases where solvent is present, the heat applied to the process vessel contents must be analyzed to determine if it is capable of overheating the solvent. Again it is conservatively assumed that if the solvent can be overheated by the process (or in the process vessel), the thermally hot solvent will escape primary confinement in the presence of an ignition source and be ignited. This could result in a large SAR fire or in the smaller fire analyzed in Reference 44. Those cases where the solvent can be heated by other thermally hot process streams or through heat coils must be evaluated as potential initiators of a solvent fire.

Reference 42 evaluated the potential for overheating the bulk liquid in the First Cycle Mixer–Settler Banks. If the bulk liquid in the mixer–settler is overheated, the solvent in the mixer–settler would also be heated above the solvent flashpoint. Reference 42 evaluated all the feed streams to the First Cycle Mixer–Settler Banks and determined that as a minimum it would take at least two overheated feed streams to overheat the bulk liquid in the mixer–settler. For example, in the 1B Bank the two streams that had to be overheated simultaneously were the 1BS and 1BX streams. This is a very conservative calculation because it takes no credit for heat transfer from the large mixer–settler surface area to the canyon atmosphere or for other cooling mechanisms available. It conservatively assumed that any heat applied to the mixer–settler remained in the bank unless it was removed by one of the exiting process streams.

Reference 42 did not assume that one of the overheated streams had to be the solvent stream. The calculation shows that overheating more than one aqueous feed stream could overheat the bulk liquid and solvent in the bank. Reference 42 evaluated the First Cycle banks at the nominal flow sheet stream flows. A correction was made to have the stream flows at the maximum or minimum limit of the acceptable range. Each stream was maximized or minimized as necessary to ensure the worst case heat transfer characteristics in the banks. The calculation evaluated the worst case conditions for nominal flow rates.

Reference 42 demonstrated that the mixer–settler feed streams required controls to prevent overheating the solvent in the bank because overheating the bulk liquid in the bank can overheat the solvent. The temperature controls were functionally classified as SS and are controlled by the PLC. To protect the first scenario, as a minimum, solvent feed stream temperature control is

required. To protect the second scenario, the temperature of all the feed streams must be controlled, because in a worst case scenario, two or all the feed streams could be overheated.

The analysis above although describing conditions for a fire in the First Cycle also applies to both Second Solvent Extraction Cycles. A description of a solvent fire in one mixer–settler bank or solvent extraction cycle is generically applicable to all the mixer–settlers and solvent extraction cycles.

Overheating the solvent in the mixer–settlers is a subset of the original SAR accident analysis and is another initiator of a potential solvent fire. The difference is the location of the release points for the hot solvent. Instead of before the process, it is after the process. The same conditions for releasing hot solvent, creating a flammable solvent vapor concentration, and the presence of an ignition source apply to this scenario exactly like they do to the first scenario. There is nothing in the second scenario that negates the single solvent stream control required in the first scenario. Instead of having to control a single feed stream, the requirement in the second scenario is to control the temperature of all the feed streams to prevent overheating the single exiting solvent stream.

Potential effect of a solvent fire on the mixer–settler banks. Both the original SAR consequence calculation and the consequence calculations in Reference 44 include the mixer–settler inventory in the consequence calculations. For the large SAR fire, the solvent and aqueous solutions are not specifically assumed to flow through the mixer–settler. However, the entire radioactive source term that could flow through the mixer–settler during the particular process run is assumed to be released to the canyon floor. Since the analysis assumes the entire source term is released to the canyon floor, it explicitly would include any potential part of the 1AX and 1AF streams previously fed to the mixer–settler. For the small fire, the source term is composed of the mixer–settler source term plus the amount pumped (fed) to the mixer–settler for a two–hour period.

8.3.2.3.3.3 Preventive and Mitigative Features

The passive engineered feature that prevents a fire in the H–Canyon and OF–H is vessel design. Vessel design includes locating electrical agitator motors outside the vessel away from process solutions. Adherence to electrical standards that are rated for NFPA 70 Class I Division 2 Group D atmospheres suppresses inadvertent sparks or excessive heating from the electrical components. This significantly reduces the potential ignition sources inside the vessels. While the canyon electric jumpers are not rated to any particular national standard, they are designed to be resistant to electrical sparks. Design and construction of the electrical jumpers in the canyon ensures that even the longest jumper cannot reach a pool of liquid solvent that is the same height as the dikes separating the canyon cells. The passive features that mitigate the occurrence of a fire in H–Canyon are the building, to include the cell design and construction, and the canyon exhaust system. The building contains the fire while the cell curbs are a DiD DF that minimizes the liquid solvent spreading to the adjacent cells.

SS engineered controls that prevent an H–Canyon solvent fire are the solvent extraction (mixer–settler) Feed Operations High Temperature Interlocks. Originally, the high temperature interlock

for Tanks 16.8, 14.6 and 15.3 were required to prevent a solvent fire in these tanks because the tank contents were heated by steam coils. The steam lines to the coils in Tanks 16.8, 14.6 and 15.3 have been disconnected and steam is no longer applied to these tanks, therefore, the high temperature interlock is not required to prevent overheating any organic solvent in the tanks. Control of the steam line configuration will be maintained by the facility Configuration Management Program. If for any reason the steam line is reconnected to any of Tanks 14.6, 15.3 or 16.8, this would be a physical change to the facility that is controlled by the Configuration Control Program and will be evaluated by the USQ Process. Originally, to prevent a fire in the Segregated Solvent Tanks, blanks, or blank equivalents, were required to be installed in the steam lines to the tanks. The steam lines to the steam coils in the Segregated Solvent Tanks in OF–H have been physically removed. An air gap now exists between the steam lines and the steam coils in the tanks. Since steam can no longer be applied to the Segregated Solvent Tanks, there is no method available to heat the organic solvent above the 90° C minimum flashpoint or to the much higher autoignition temperature at which a fire will occur. Therefore, the AC to maintain a blank or blank equivalent in the steam lines to the Segregated Solvent Tanks has been deleted as a solvent fire prevention control. If for any reason the steam lines are reconnected to the Segregated Solvent Tanks, this would be a physical change to the facility that is controlled by the Configuration Control Program and will be evaluated by the USQ Process. See Table 8.3–2 for a specific listing of the engineered controls used. ACs to prevent a solvent fire in H–Canyon and OF–H include limiting operating temperature to at least 5° C (i.e., 85° C) below the 90° C flash point required by the diluent purchase specifications. Another AC ensures that only n–paraffin that meets the minimum purchase specification flash point is used in H–Canyon and OF–H.

The First Cycle high temperature interlocks are controlled by a PLC. See the First Cycle process description (Section 2.6.1) for a description of the PLC based system. The PLC, the recorder, and the instrument loops are the SS components of the instruments and controls required to prevent a fire in the First Cycle. The PLC has been shown as reliable as the previous control system in WSRC–RP–97–00941, Rev 1 (Ref. 45). S–CLC–H–00603 (Ref. 46) showed that the frequency of a fire will not significantly change as a result of the new PLC control system. Although the stream temperature control method has changed, the stream temperature limits have not changed. Other factors involved in determining the First Cycle solvent fire frequency have not changed, so the overall frequency of the event has not changed and it remains in the Unlikely frequency category.

For fire prevention, the PLC process control system must maintain the 1AS–Acid, 1AX, 1BS, 1BX, and 1CX temperatures equal to or less than the 85° C limit required to reach the flash point of the n–paraffin diluent. The normal operating temperatures for the streams are 60° C for 1CX and 40° C or below for the 1AS–Acid, 1AX, 1BS, and 1BX streams. The solvent temperatures are monitored by Resistance Temperature Detectors (RTDs). The solvent temperature limits are enforced by high–high alarms and interlocks set at 80° C, which is 5° C below 85° C limit. For each process stream, the interlock function closes the steam supply valve to the associated heat exchanger when the TSR limit is reached.

The fire prevention controls (interlocks or alarms) for the Second Uranium Cycle are hardwired with the exception that they pass through the input/output cards of a programmable component

(e.g., DCS) in the instrument loop. These interlocks are activated by another programmable component (e.g., the Yokagawa Recorder). Reference 46, although completed for the First Cycle, is applicable to the Second Uranium Cycle instrument loop programmable components because of the similarity of the input/output cards and other electronic components used in this system. The frequency of a fire in the Second Uranium Cycle will not significantly change as a result of using a programmable component in the Second Uranium Cycle temperature instrument loops and the event frequency remains in the Unlikely frequency category.

The analysis in Reference 46 is very conservative and did not include several DiD items that help prevent a solvent fire in the First Cycle. Among these conservatisms are the following that pertain to a solvent fire in the First Cycle:

- Probability of 1.0 that if the streams become overheated (i.e., heated above 85° C TSR limit) that they will exceed the 90° C flash point. Additionally, a 1.0 probability that the overheated solvent will escape the primary confinement of the vessels and piping and that an ignition source is available to ignite the heated solvent vapor. Even if the solvent is overheated, it will not necessarily escape the process vessels and piping. If overheated solvent were to be released from the primary confinement, an ignition source must still be available to ignite the solvent since the solvent will not be heated to its 230° C autoignition temperature. No known ignition sources, other than static electricity sparks, are available in the canyons.

- Failures are undetected and result in greatest potential consequences. For the fire scenario, all temperature change sensing was assumed lost and multiple steam valves were assumed to be driven to the maximum open position with no indication of the loss of the controlled condition.

- No credit given for the presence of the high alarms (temperature) on both the PLC and the Yokogawa recorder. The High alarm will activate and alert the operator to take action before the PLC takes automatic action upon activation of the High–High alarm setpoint.

- No credit for independent operator actions in response to signals and alarms indicating high temperature on the Yokogawa recorder.

- No credit for the operator detecting failures in the PLC and acting to prevent dangerous conditions.

Some of the major defense-in-depth activities and controls not credited in the analysis include the following:

- Temperature measurement loops go through the Yokogawa recorder and will still indicate the process solution temperatures even if the PLC fails. The ability to read the process solution temperatures manually will allow the Second Level operator to manually close the steam block valves to the heat exchanger for any stream that is experiencing a high temperature.

- The alarms are routed through a programmable electronics system (e.g., a Yokogawa recorder), which sends the alarm signal.
- Alarm Response Procedures tell the operator to manually shutdown the system by closing steam isolation valves, shutting down feed jets, and stopping the feed pumps.
- Operator round sheet readings from other instruments are taken and recorded to provide early indication of potential problems and allow the operators to take corrective actions regardless of the status of the PLC.

The engineered features that mitigate the consequences of a solvent fire in H–Canyon are the H–Canyon Exhaust System (including, for example, the Sand Filter, Stack and Stack Liner and Fan Damper Air System), the canyon structure, and the process vessel design. An AC that mitigates the consequences of a solvent fire is the Structural Integrity Program. Defense-in-depth features that mitigate the consequences of a fire in the canyons include the sump liquid level instruments for Hot Canyon Sumps 13H through 15H and Warm Canyon Sumps 10W through 16W. Operator response to the high sump level readings or alarms will reduce the amount of material available to burn in a fire by initiating actions to return the spilled material to a canyon vessel.

There are no engineered controls that mitigate the consequences of a fire in the OF–H segregated solvent facility. ACs that mitigate the consequences of a solvent fire in OF–H are the gamma activity limits for the washed segregated solvent. These gamma activity limits established in calculation, X–CLC–H–00404 (Ref. 103), are: First Cycle 3.0E+8 dpm/ml; Second Product Cycle 1.0E+7 dpm/ml; and Second Uranium Cycle 2.0E+7 dpm/ml.

The basins in the OF–H are a DiD feature that limit the fire size by limiting the spilled solvent surface area. Another DiD feature is the tank material that acts as a barrier to protect the hazardous materials from direct impingement by a fire while providing a confinement function.

The mitigating ACs for the other events are the Fire Protection Program (e.g., Control of Ignition Sources or Combustibles) and the Emergency Response Program that define the actions and policies to minimize injuries, damage to property, and impacts to the environment.

The additional engineering and ACs listed for H–Canyon and OF–H do not change the solvent fire frequency from the Unlikely frequency category.

The consequences of a solvent fire are reduced to medium to the offsite and onsite receptors for the H–Canyon Solvent Extraction unit operation, and low to the offsite and onsite receptors for the Rerun, Waste Disposal, and OF–H. For Solvent Extraction, the Scenario Class is reduced from I to II. For HEU Blend Down chemical consequences (see Appendix H of the H-Canyon), the Scenario Class is reduced from II to III. For Rerun, Waste Disposal, and OF–H, the Scenario Class is reduced from II to III.

8.3.2.3.4 FIRE – WILDLAND OR OTHER EXTERNAL FIRE

Based on the wildland fires that posed a threat to other DOE sites and facilities, an external fire (wildland fire) is evaluated for potential impacts to H–Canyon and OF–H. A small and

controlled wildland fire is an Anticipated event because of natural causes (e.g., lightning strikes) and the potential for controlled burns to escalate to an uncontrolled wildland fire. However, a wildland fire that could spread to one of the nuclear facilities is an Unlikely event. The radiological and chemical consequences to the offsite public, the onsite and facility workers are considered low for a wildland fire that could impact the H–Canyon hardened structure. The PHA (Appendix H) estimates the radiological consequences to be low for all receptors and the chemical consequences to be low for the offsite public and the onsite worker at 600 meters and medium to the facility worker. The combination of an Unlikely frequency and a medium consequence for the OF–H facility worker makes this a Scenario Class II event. When the engineered systems and administrative controls described below are considered, the event frequency becomes BEU for H–Canyon (hardened structure) and Extremely Unlikely for OF–H. The consequences remain low for the canyon events and become low for the OF–H events. The Extremely Unlikely frequency and low consequences reduces the event from a Scenario Class II to a Scenario Class IV for OF–H.

8.3.2.3.4.1 Release Pathways and Scenarios

The wildland fire scenario assumes that there is combustible material in the forests and grasslands around the H–Canyon and OF–H Facilities. An ignition source, either natural or manmade, ignites the combustible material. The wildland fire becomes an uncontrolled fire that has the potential to spread to other facilities or areas by various means. The two most likely methods of igniting other combustible material from such an uncontrolled fire are a flaming brand or the heat wave from the original fire. A flaming brand (e.g., burning pine cone, branch, or other flaming item) can be carried several hundred yards from the fire by the winds associated with the fire. This burning brand is the most likely method by which an external fire can spread to the nuclear facilities because it can land in or near combustible materials and ignite them. A thermal heat wave from an external fire has significant energy that could ignite some unprotected combustible materials by heating them above their autoignition temperature or flashpoint. Another potential ignition method would be the ventilation systems pulling in a burning brand into the ventilation system and igniting materials in the ventilation system.

If an external fire can ignite combustible materials in either H–Canyon or OF–H, the resulting fire could release radiological or hazardous materials. The most likely scenario is one in which combustible liquids (e.g., the Segregated Solvent in OF–H or the solvent in the solvent extraction cycles in the canyon) are ignited and the radioactive materials contained in the solvents are released as an airborne release. Another potential release path is the heating of aqueous solutions by the fires started in H–Canyon or OF–H. If the aqueous solutions are heated to boiling, some of the radioactive materials in the solutions will be released as an airborne particulate. For any radioactive material released in the canyon, the canyon structure and ventilation system will contain the airborne radiological material and any liquid releases that might result. The results of a fire in the canyon should be a sand filtered stack level release. In OF–H, there are no structures or ventilation systems that will mitigate the release, therefore, any OF–H release will be a ground level, unfiltered release.

Calculation F–CLC–G–00025 (Ref. 47) determined a generic frequency for a wildland fire that could threaten the H–Canyon and OF–H Separations Facilities. Reference 47 also determined

the frequency of a wildland fire occurring on SRS as being in the Unlikely Frequency Range with a 2.0E–03/year frequency. The frequency of a fire in OF–H (6.1E–04/year) is in the Unlikely Frequency Range.

Using a conservative probability of 2.5E–01 (25%) (Reference 47) that a wildland or external fire will ignite some material in OF–H, the frequency for a wildland fire igniting a secondary fire in OF–H is 5.0E–04/year (2.5E–01 * 2.0E–03). This is the frequency for any secondary fire in the Outside Facilities even if it is a small fire that will not impact the Outside Facilities tanks or transfer lines (i.e., will not rupture the tanks or piping or cause significant boiling of the tank contents). The tanks and materials in Outside Facilities are separated by distance and physical barriers (e.g., tanks themselves, curbs, roadways, and sidewalks). There is a very limited amount of exposed combustible material in OF–H. Because of the separation and barriers between the tanks and the limited amount of combustible material available, 1.0E–01 is the estimated probability that a small fire will propagate into a fire with sufficient energy to damage the tanks or pipes or cause significant boiling of the tank contents. If the secondary fire cannot damage the OF–H storage tanks or transfer lines or cause the tank contents to boil, then the fire will not cause a radioactive material or hazardous chemical release. Using the conservative probability of 1.0E–01 that an external fire will cause a OF–H radioactive material or hazardous chemical release from tank or piping damage or boiling the tank contents gives a release frequency of 5.0E–05/year (5.04E–04 * 1.0E–01) or an Extremely Unlikely event. These conservative conditional probabilities indicate that the wildland fire induced frequency of a hazardous chemical or radioactive material release in OF–H is less than the analyzed fire event frequency.

A radioactive material release frequency for H–Canyon was calculated using information from Reference 47. This is a generic computation applicable to all Separations hardened facilities including the processing facilities and supporting facilities such as the 292–H or 292–F Fan Houses, the sand filters, the exhaust stacks, and other hardened (concrete or metal building) structures. The frequency for an external fire causing a radioactive material or hazardous chemical release from any hardened Separations Facility is:

$$f = (2.0E–03 * 2.5E–01 * 3.0E–03 * 1.0E–01) = 1.5E–07/yr$$

where:

- f is the frequency of wildland fires impacting any hardened structure that could cause a radioactive material or hazardous chemical release
- 2.0E–03 is the frequency of a wildland fire occurring anywhere on SRS (Ref. 47)
- 2.5E–01 is the probability that a fire ignites significant combustible material on, adjacent to, or near a hardened structure (Ref. 47)
- 3.0E–03 is the probability a secondary fire (from other combustible material) will propagate into the hardened structure (Ref. 47)
- 1.0E–01 is the probability that any fire, which gets inside the hardened structure, will propagate throughout the facility causing a radioactive material or hazardous chemical release (estimate based on engineering judgment).

The frequency with which a wildland fire will cause a radioactive material or hazardous chemical release from the H–Canyon hardened structure is 1.5E–07/year or BEU. Since the frequency is BEU, consequences for an external fire that propagates into the hardened H–Canyon or the support structures will not be determined.

8.3.2.3.4.2 Preventive and Mitigative Features

Many preventive and mitigative systems will prevent or mitigate the effects of an external or wildland fire.

The H-Canyon structure, the Canyon Exhaust System exposed hardened structures, the 294–H and 294–1H Sand Filters, the 292–H Fan House, and the 254–19H DG Buildings provide protection from flaming brands and the wildland fire heat wave. These structures make a fire spreading into these facilities BEU.

Conversely, if it were credible for a wildland fire to propagate into the canyon, the H-Canyon structure and the Canyon Exhaust System mitigate a radiological or hazardous chemical release by filtering any airborne particulates from the exhaust stream. Additionally, the Canyon Exhaust System will release the exhaust stream high into the air where it will be dispersed, thereby reducing the amount of radioactive or hazardous materials to which the receptors are exposed during or after an accident. Programmatic controls that will mitigate an external fire that propagates into OF–H are the Emergency Preparedness and Emergency Response Programs for all three receptors.

A wildland fire can disrupt the electrical power system for H–Area. Specifically, it could destroy the normal electric utility power lines thereby preventing H–Canyon and OF–H from receiving power from the site electrical power grid. Although it is BEU for the wildland fire to propagate into the hardened structure where the standby and emergency DGs are located, a wildland fire can affect the operation of the DGs. This effect can be by one of two methods. The first is that the location and size of the fire prevents refueling of the DG fuel tanks. Without fuel, the diesels will shut down, thereby eliminating the emergency power to the SC/SS systems. The second method by which a wildland fire could affect the DGs is the smoke from the wildland fire. The smoke could enter the DG air supply and will eventually blind the air filter for the diesel engine. This could cause the DG to shut down.

A total loss of the normal utility and emergency electrical power systems will cause a loss of the canyon ventilation system and could cause the pressures inside the canyon to reach atmospheric pressure. If the pressure in the canyons exceeds that of the outside atmosphere, then a ground level, unfiltered release of radioactive material will occur. Although the wildland fire will not affect the canyon structure, a leak path may exist that will allow radioactive material to escape from the canyons. Since there are no other postulated accidents that could occur simultaneously with a wildland fire, the only radioactive material that could escape would be the normal airborne activity in the canyons. The amount of radioactive material released from a total loss of electrical power or the Canyon Exhaust System because of a wildland fire will be much less than the amount released during an earthquake. For the earthquake event, radioactive solutions are released from the tanks, which greatly increases the amount of airborne material available for

release over normal operations. Since there is not other simultaneous releases of radioactive material because of a wildland fire, the source term from a wildland fire will be less than that of an earthquake. Additionally, the ground level unfiltered release from an earthquake occurs over a 48–hour period. For a wildland fire, it is expected that the release duration will be much shorter, if there is a release at all. Since the release duration is shorter and the Material at Risk is lower for the wildland fire, the consequences of a total loss of power event as a result of a wildland fire event are bounded by the consequences associated with the DBE.

Specific preventive actions to prevent a wildland fire from spreading to the H–Canyon and OF–H Facilities include the SRS Forest Service Forest Management Program, which consists of controlled burns and mechanical thinning of the underbrush to limit or prevent a wildland fire spreading out of control. Additionally, the SRS Fire Department response to any fire including a wildland fire will help prevent an external fire from spreading into the canyon and OF–H. Note that neither of these programs are under the direct control of the H–Canyon Facility Manager and are noted for information only.

The Fire Protection Program requires maintaining control of and limiting transient combustible materials in all nuclear facilities and placing limits on the combustible material allowed in the facilities. Additionally, the Emergency Response and Emergency Preparedness Programs assist in preventing an external fire from propagating into the nuclear facilities and evacuation of personnel from any area that is at risk of being over–run by the wildland fire.

The Configuration Control Program is credited with:

- Ensuring that a non–combustible material of construction (e.g., concrete) is used for the Canyon structure and the basins and curbs in OF–H.
- Ensuring that the tanks are generally of carbon or stainless steel and therefore prevent rupturing or burning in a fire.
- Ensuring that bird and rodent screens with a mesh size no larger than 0.5” on a side will be available on all the inlets to the various air supplies for the H–Canyon and supporting structures and facilities. The small mesh size ensures that a flaming ember or brand large enough to start a fire will not be pulled into the building air intake systems.

The controls noted above ensure that an external fire that could spread into the hardened structures and cause a subsequent release is a BEU event and that the frequency of an external fire that propagates to the OF–H Facilities is an Extremely Unlikely Event. The controls ensure that the radiological and chemical consequences to all receptors are low. The combination of an Extremely Unlikely frequency and a low consequence reduces the Scenario Class from II to IV.

8.3.2.4 Inadvertent Nuclear Criticality

The H–Canyon PHA (Ref. 8), (H–Canyon PHA Events VE–12, VE–13, VE–14, TS–04, AL–07, AL–08, GP–11, GP–12, OF–12, OF–13, SE–14, SE–16, SR–08, SR–10, EV–12, RR–10, WD–13, and HC–05) and (PHA Appendix H Events RA–15 and NU–11) consider an inadvertent criticality to be a significant event. The canyon and OF–H tanks, process vessels, and sumps, except the HEU Blend Down LEU Measuring Tank E1–2 including insulation jacket drain hole,

and LEU shipping container, are not geometrically favorable to prevent a criticality. Therefore, no specific passive features identified prevent this event for most vessels in H–Canyon and OF–H. These two DFs (i.e., LEU Measuring Tank E1–2 with insulation jacket drain hole) and LR 230 Transport Unit Package (i.e., Shipping Container) are discussed in more detail below.

The PHA determined that a criticality in H–Canyon and OF–H was in the Anticipated frequency category for the solvent extraction cycles, Solvent Recovery, evaporators, Rerun, waste disposal, and the Hot and Warm Canyon Sumps. A criticality is in the Unlikely frequency category for the canyon exhaust system, and in the Extremely Unlikely frequency category for Fuel Transfer and Storage, Dissolving, Head End, and all OF–H locations. Both HEU Project criticality events have a frequency of Beyond Extremely Unlikely. The NU event is not discussed further because NU solutions cannot go critical with light water per ANSI/ANS Standards. The different frequency categories for the various processes are based on the amount of fissile material that is expected to be in the unit operation where the criticality can occur. Additionally some unit operations have more than one place where a criticality can occur (e.g., in solvent extraction a criticality can occur in the mixer–settler and in the cell sumps). Since the most likely cause of a criticality is exceeding the concentration limits, those solutions with lower fissile material concentrations will take longer to reach a critical concentration.

A fire event (FO–12a) that postulated a tanker truck carrying flammable liquid impacting A–Line storage or transfer tanks resulting in a fire induced criticality was evaluated (see Section 8.3.2.3.3) (Ref. 41). The Reference 41 evaluation concluded that a large organic fire-induced criticality is a BEU event.

The passive feature that mitigates the event is the canyon building structure for all events inside the canyon. There are no passive features that will mitigate a criticality in OF–H. The dose to the facility worker is based primarily on the expected prompt gamma and neutron dose the facility worker will receive. For the co–located worker and offsite public, the dose was based on the noble and halogen gaseous fission products produced during the criticality. Regardless of where the criticality occurs, the expected consequences to the onsite worker and the offsite public are low. Based on the location of the criticality, the consequences to the facility worker were classified as low for the Hot Canyon. The consequences were determined to be medium to the facility worker for all criticality events in the Warm Canyon and the canyon ventilation system. All criticality events in OF–H have a high consequence to the facility worker. Depending on the location of the criticality, the event is classified as a Scenario Class I (e.g., solvent extraction) or II (e.g., A–Line or Railroad Tunnel) event. When the active systems and ACs (described below) are considered, the event frequency is reduced to either the Unlikely or the Extremely Unlikely frequency category. The event becomes either a Scenario Class II or Class III event depending upon the location or process involved.

NCSE N-NCS-H-00179 (Ref. 36) documented the double contingency analysis for the receipt, storage, neutralization, and disposition of discarded HB-Line fissile material solutions in H-Canyon crediting gadolinium as a neutron absorber. The NCSE developed the necessary controls to ensure that receipt of fissile solutions from HB-Line in Tank 11.1 and transfers to Tanks 12.1, 16.1, and 16.3 are poisoned with gadolinium before neutralization and transfer to high level waste.

The H–Canyon PHA and DCAs identify areas where an inadvertent criticality can occur in H–Canyon and OF-H (Ref. 8, 36, 37). Using the methodology described in References 36 and 37, the DCA development utilized a team of facility experts to evaluate all potential criticality scenarios. The potential criticality scenarios evaluated as incredible are documented in the DCA appendices, along with the bases for their selection as incredible scenarios (Ref. 36, 37). The credible criticality scenarios, the bases for their selection as credible, and the double contingency controls employed to protect against the scenario are documented in the DCA (Ref. 36, 37).

The DCA CSLs are listed in Section 5 (i.e., ACs Section) of the TSR.

8.3.2.4.1 Release Pathways and Scenarios

For a criticality to occur, a critical mass and configuration of fissile material (e.g., U–235 or Pu–239) must be achieved. If either a critical mass or configuration is not achieved, an inadvertent criticality cannot occur. The fissile material form (e.g., solid [as in irradiated or unirradiated targets, fuel rods, or assemblies] or a liquid in a solution) determines the method by which a critical mass and configuration are reached. The discussion below bounds the other HEU Blend Down criticality scenarios.

Typically, in the cask cars, the Fuel Receipt and Storage Area, and in movement from the Fuel Receipt and Storage Area to the Dissolver, the most likely criticality scenarios are as follows:

- Multiple fuel elements melt and form a critical mass and configuration. The fuels can melt from a loss of coolant or from being hot targets (inadequate cooling time) from the reactors;

- Multiple fuel bundles or targets are dropped from the crane or cask car and accumulate until a critical mass and configuration is reached;

Since the SRS reactor fuel has cooled for over 3,000 days, it does not contain enough high activity fission products to melt the fuel if the cask car or storage basin coolant was lost. WSRC–RP–94–207 (Ref. 49) and SRT–CMA–9300074 (Ref. 50) show that melting fuel will not create a criticality in the cask car or in dry storage conditions. Since melting fuel will not create a criticality in the cask car, it will not create the conditions necessary for a criticality in the canyon fuel storage area. Because of the absence of high activity fission products, there is no longer a criticality concern in the Fuel Storage Area from melting of the SRS reactor or the offsite fuels which will be processed in H–Canyon. Therefore, although wet storage of the SRS and offsite fuel in the H–Canyon Fuel Storage Area is the preferred option, dry storage of the fuels is allowed provided the fuel has cooled for at least 3,000 days based on the last SRS fuel being removed from the SRS reactors in 1988. Fuel cooled this long eliminates the concern about melting of the fuel from self–heat generated by decay of the high activity fission products in the fuel. T–CLC–H–00329, Revision 1 (Ref. 51), is a structural analysis of the bundle storage racks. The seismically qualified fuel bundle storage racks (a passive DF), which are inspected every 10 years, were designed and constructed to ensure that stored fuel bundles are separated to the minimum safe distance necessary to prevent a criticality using 150–day cooled fuel.

None of the scenarios described above resulted in a credible scenario in which a critical mass or configuration was formed in the Fuel Bundle Storage Area, the Railroad Tunnel, or the cask car. Therefore, a nuclear criticality event in the Railroad Tunnel, Fuel Bundle Storage Area, or the 70–ton cask car is a BEU event, and will not be considered further in this SAR.

When the fissile material is in a liquid form (solution) the most probable methods of creating a critical mass and configuration include:

- Exceeding the concentration limits in a single vessel or sump;
- Precipitation of the fissile material;
- Slow undetected fissile material accumulation (e.g., from a small process pipe leak) that evaporates forming a critical mass and configuration;
- Gradual concentration of the fissile material solution by evaporation, or
- Accumulation of fissile material due to reflux in the solvent extraction banks.

The reflux conditions in the solvent extraction mixer–settler banks can be caused by several different mechanisms. Some of the mechanisms identified include flow ratios that are out of tolerance limits, low TBP concentration in the 1AX feed stream for the First Cycle and in the 1DX feed stream for Second Uranium Cycle, and low acid feed streams. The various potential causes of a reflux, and their effects are documented in WSRC–RP–98–01247 (Ref. 54). The controls necessary to prevent or control the reflux conditions were given in the JCO, WSRC–RP–98–01248 (Ref. 55). The basis for the review of the events that could cause a reflux condition in the mixer–settler banks was a PISA identified for the First Cycle. This PISA was declared because it was determined that a low TBP concentration in the 1AX feed stream to the First Cycle A–Bank could cause a reflux condition in the bank. This condition was not included in the H–Canyon DCA, N–NCS–H–00037 (Ref. 37). The conditions identified in the PISA were evaluated to determine if an USQ existed for this operation.

During the evaluation of the PISA for the low TBP concentration in the First Cycle Mixer–Settler Banks, it was discovered that the neutron monitors might not be effective in detecting all reflux conditions in the banks. The neutron monitors are relied upon in the SAR, TSR, and DCA to detect an increase in the neutron flux in a mixer–settler stage if a reflux condition exists. A reflux condition exists when the fissile material (U–235) is not completely removed from the banks into either the product or waste streams. For a reflux to occur, typically one or more of the process parameters are out of limits. This allows fissile material to accumulate in the bank (i.e., reflux). As the fissile material concentration increases in the bank, the neutron flux given off by the fissile material increases. The neutron monitor will detect the increased neutron flux and go into an alarm condition indicating there is a probable reflux condition in the bank.

The neutron monitors are located on the bank stages in the most likely location for a reflux condition to occur. The evaluation of the low TBP concentration scenario indicated that a low TBP concentration would cause a reflux condition in the 1A Mixer–Settler Bank several stages away from the neutron monitor location. Because of the limited range of the neutron monitor, the neutron monitor would not detect a reflux caused by a low TBP concentration before the

fissile material concentration for the bank or some stages in the bank was exceeded. A PISA was declared for this condition and an evaluation of the scenario was completed. All potential scenarios for which the neutron monitors would not detect a reflux condition in the banks for the First Cycle and the Second Uranium Cycle were identified by an independent technical analysis team. Compensatory controls were identified for the low TBP concentration and those scenarios for which the neutron monitors were not an acceptable second defense. The First Cycle JCO contained the compensatory controls for these scenarios that were applicable until revisions to incorporate the controls in the permanent DSA documents were completed.

The compensatory controls identified in the JCO were evaluated to determine if they would be classified as controls (defenses) in the DCA or included in the SAR and TSR as SS controls. For the First Cycle JCO, it was determined that four additional SS equipment systems, one AC, and one DF should be included in the SAR and TSR to prevent a potential criticality event in the mixer–settlers. All the identified controls are necessary to prevent a reflux condition in the First Cycle Mixer–Settler Banks in those stages where the neutron monitors would not detect the reflux condition. The neutron monitors will detect a reflux condition in certain mixer–settler stages. The new controls prevent the conditions necessary for a reflux condition from occurring. These controls involve controlling the temperature of selected feed streams to the mixer–settlers, the flow rates of selected feed streams, and the acid concentration of the feed streams. The controls on the individual streams are established to protect the temperature and acid concentration in the bulk liquid in the mixer–settlers. Both low and high temperatures and flow rates must be protected. The specific streams to be protected and the necessary controls are identified in the preventive and mitigative features section (Section 8.3.2.4.2).

In addition to ensuring that the flow rates to the mixer–settlers are within limits, a control was developed to prevent significant leaks downstream of the flow measuring instruments from causing a low flow condition to the mixer–settlers. This additional measure is necessary to prevent a common mode failure that could defeat one or more of the criticality controls identified in this SAR or in the DCA. This additional control will allow detection of an increased liquid level in the canyon sumps and require action be taken to ensure that the feed streams to the mixer–settlers are within established limits.

Based on the Second Uranium Cycle review, one additional neutron monitor has been added to both the 1D and 1E Mixer–Settler Banks. Both banks are now required to have two separate functional pairs of neutron monitors on each mixer–settler. On the 1D Bank, the neutron monitor pairs are located on Stages 2 and 5 while the neutron monitor pairs are located on Stages 11 and 12 of the 1E Bank.

A criticality accident is possible in Decanter 15.7 if there is an upset in the 2nd Uranium Cycle operation allowing highly concentrated fissile solution to reach Decanter 15.7. The accident would occur as the highly concentrated solution is transferred into 15.7. However, if the cycle is not operating, Decanter 15.7 would not be a potential site for a nuclear criticality accident.

An event occurred in the F–Canyon Second Plutonium Cycle mixer–settlers in which the valve failed that controls the air pressure on the aqueous outlet weir in the mixer–settlers. The failed weir pressure control allowed a reflux condition to occur in the banks. This event was evaluated for the H–Canyon mixer–settlers as a PISA based on an unanalyzed failure scenario that could

lead to a criticality. It was determined that an USQ existed, USQ–HCAN–2002–02402 (Ref. 120). The malfunctioning weir pressure interface controller created another criticality scenario in the mixer–settlers. Controls were developed to prevent this scenario.

8.3.2.4.2 Preventive and Mitigative Features

The accident analysis assumes that, if an inadvertent criticality occurs, the noble and halogen gaseous products created are the primary dose contributors to the co–located worker and the offsite public. Since these are gases, the sand filter has no effect on them, and the canyon ventilation system is not credited as a mitigator for a criticality. The canyon building structure is assumed to mitigate the effects of the prompt neutron and gamma dose generated during the criticality event.

WSRC considers all inadvertent criticalities the same regardless of the location and scenario class. Therefore, a criticality in the Hot Canyon that is normally rated a Scenario Class III event in the PHA will receive the same level of protection and the same SS controls as a Scenario Class I or II event which occurs in the Warm Canyon or OF–H. The controls that prevent or mitigate an inadvertent criticality include but are not limited to the following:

1. Limits on the concentrations of fissile material in solutions

2. Limits on the total amount of fissile material in any designated vessel

3. Limits on the solution acidity (to prevent fissile material precipitation)

4. The shielding provided by the canyon structure and the control of personnel entry into the warm and hot canyon areas

5. Geometrical constraints (e.g., storage racks, pipe size, LEU Measuring Tank design (including insulation jacket drain hole), and dissolver inserts, and LR 230 Shipping Container)

6. Active engineered controls (e.g., neutron monitors, and uranium analyzers) and

7. Compensatory measures such as those described in SAR Section 6.5.9.3 or those that may be contained in the Radiation Protection or Configuration Management Programs.

Inadvertent criticality prevention controls for H–Canyon and OF–H were identified in the DCA (Ref. 37) and include both engineered and ACs. See the section below on the development of the criticality safety controls. Table 8.3–2 contains the engineered controls and identifies the applicable process equipment. Examples from Table 8.3–2 of H–Canyon and OF–H criticality prevention engineered controls include Dissolver inserts that are inspected each time they are installed, Nuclear Safety Blanks (NSBs), Neutron Monitors and Interlocks, Reactor Fuel Storage Racks that are inspected every 10 years, the jacketed transfer line from HB–Line to Tank 11.1 (when installed), the Head End Strike Tank Low Liquid Level and High Temperature Steam Cutoff Interlocks, the Head End Evaporator Low Liquid Level and High Specific Gravity Steam Cutoff Interlocks, the Evaporator 17.2E/17.6E Low Level Interlocks, Dissolver 6.1D/6.4D Condenser Cooling Water Interlocks (Ref. 132, 133) and the 1CU and 1EU Uranium Analyzer

Interlock. A DF that prevents an inadvertent criticality in the dissolvers is the location of the upper heating coil in Dissolvers 6.1D and 6.4D. An AC that prevents a nuclear criticality is that approval by both the H-Completion Projects Chief Engineer and the HCP Manager is required for the installation or removal of a NSB. The NSBs are inspected every 10 years to ensure they meet specified minimum requirements. If steam can be directly applied to the NSBs, they are inspected every five years per the guidance in WSRC–TR–2003–00418 (Ref. 111). If steam can be prevented (e.g., block valve, process line blank, etc.) from being in direct contact with the NSB, the five year inspection requirement is not required.

Two HEU Blend Down Project SS DFs that prevent a criticality in the OF–H are the geometrically favorable design LEU Measuring Tank E1–2, including insulation jacket drain hole, for loading the TVA shipping containers and the LR 230 Transport Unit Package. In addition, the LEU Measuring Tank is sized to prevent overfilling the TVA shipping containers. These two DFs and their incredible scenarios are further discussed in the HEU Blend Down Loading Station and Measuring Tank NCSE, N–NCS–H–00126 (Ref. 56). The Eco–Pak® Liqui–Rad (LR) 230 Transport Unit Package is a geometrically favorable design for offsite transport of LEU solutions containing less than or equal to 5.0 weight percent U–235 enrichment and licensed by the Nuclear Regulatory Commission. This Type B shipping container design precludes a criticality from occurring due to over concentration by freezing or evaporation by accounting for the upstream control of the uranyl nitrate concentration and enrichment levels, maximum volume, and non U–235 fissile impurity levels. This shipping container is designed to minimize releases by providing a barrier that withstands external impacts, fires, and protects against damage due to internal pressurization. No nuclear criticality safety controls are required during onsite transfer and/or offsite transport of this container, other than those stipulated in the SAR for Packaging for the Eco–Pak® Liqui–Rad Transport Unit, Revision 5, dated August 2002. This report also concludes that no additional shielding is required because the design provides more than adequate shielding for the LEU material. Dose rates on the surface of the shipping container are a fraction of the limits specified in 10 CFR 71. Any number of shipping containers (e.g., an infinite array) containing uranyl nitrate (i.e., LEU material) at the maximum enrichment and concentration with the maximum quantities of allowable impurities remains subcritical with optimum interspersed hydrogenous moderation under normal and hypothetical accident conditions.

The following controls have been identified as SS items to prevent a reflux condition and potential criticality in the First Cycle Mixer–Settlers. The basis for these controls were developed in the First Cycle JCO (Ref. 55) and in a white paper issued on the acid concentrations in the mixer–settler banks (Ref. 57). The controls include the following:

- High Flow Alarm on the 1AF Feed Stream
- Low Flow Alarm on the 1AX Feed Stream
- High Temperature Alarms for the 1BS and 1BX Feed Streams
- Low Temperature Alarms for the 1BX and 1CX Feed Streams
- 1AS–FS Flow System design that limits flow to 2.8 liters/minute

- Canyon Section 13H Sump High Liquid Level Alarm
- 1CU Conductivity Meter and Interlock
- A walk down of the Second Level to look for leaks in the 1AX Feed Stream each time the process is started up.

The neutron monitor, conductivity, and colorimeter interlocks and the temperature and flow alarms on the First Cycle Solvent Extraction Process are controlled by a PLC. See the First Cycle process description (Section 2.6.1) for a description of the PLC based system. The PLC, the recorder, and the instrument loops are the SS components of the instruments and controls required to prevent a criticality in the First Cycle.

The fault tree for a criticality in First Cycle cites data for the expected neutron monitor failure rates used to calculate the overall frequency for an inadvertent criticality in the First Cycle. The calculation in Reference 46 compared the loss of neutron monitoring capability caused by a PLC failure to the previously identified neutron monitor failure rates and showed there was no significant change in the loss of neutron monitoring failure rates between the two systems. The assumption was made that any other factors that could cause a criticality event would be the same for both systems and that the only variable was replacing the method of controlling the neutron monitor functions and interlocks. The PLC has been shown to be as reliable as the original control system in preventing an inadvertent nuclear criticality and the frequency of a criticality will not significantly change as a result of the new PLC control system (Ref. 45, 46). Although the method of controlling the neutron monitor, conductivity meter, and colorimeter interlocks has changed, the concentration and mass limits placed on the mixer–settler banks have not changed. Other factors involved in determining the frequency of a criticality in First Cycle have not changed so the overall frequency of the event remains in the Unlikely frequency category.

For criticality prevention, the PLC process control system maintains the fissile material concentration in the mixer–settler banks and the 1CU receipt tank below the concentration limits specified in the DCA. For each mixer–settler bank, the interlock function SCRAMs the system when the fissile material limit is reached.

The criticality controls (interlocks or alarms) for the Second Uranium Cycle are hardwired with the exception that they pass through the input/output cards of a programmable component (e.g., DCS) in the instrument loop. These interlocks are activated by another programmable component (e.g., the Yokagawa Recorder). Reference 46, although completed for the First Cycle, is applicable to the Second Uranium Cycle instrument loop programmable components because of the similarity of the input/output cards and other electronic components used in this system. The frequency of a criticality in the Second Uranium Cycle will not significantly change as a result of using a programmable component in the Second Uranium Cycle temperature instrument loops and the event frequency remains in the Unlikely frequency category.

The analysis in Reference 46 is very conservative and did not include several DiD items that help prevent a criticality. Among these conservatisms are the following that pertain to a criticality in the First Cycle:

- Failures were undetected and resulted in the greatest potential consequences. For a criticality, this assumed the loss of any ability to detect a change in neutron flux.

- Other TSR/SAR/DCA controls available to prevent or mitigate a reflux condition in the mixer–settler banks were not considered in the analysis. A reflux condition must exist in the mixer–settlers to have a criticality. Only the neutron monitoring capability was considered as the means of detecting and/or mitigating a reflux condition.

- No credit given for the presence of the neutron monitor high alarms on both the PLC and the Yokogawa recorder. The High alarm will activate and alert the operator to take action before the PLC takes automatic action upon activation of the High–High alarm setpoint.

- No credit for independent operator actions in response to signals and alarms indicating criticality potential on the Yokogawa recorder.

- No credit for the operator detecting failures in the PLC and acting to prevent dangerous conditions.

- No credit for the potential for the PLC to detect criticality potential from the uranium concentration monitor.

Some of the major DiD activities and controls not credited in the analysis for criticality prevention include the following:

- The alarms and neutron monitor readings are routed through a programmable electronics system (e.g., a Yokogawa recorder) that sends the alarm signal. The neutron monitor readings can be taken manually directly from the Yokogawa strip chart.

- The operator can read a digital display on the colorimeter to get the appropriate readings if the PLC fails. Additionally the colorimeter readings and status are fed to the Yokogawa recorder where the operators can take the readings manually.

- Alarm Response Procedures tell the operator to manually hit the SCRAM button in the control room. Then the operator(s) are to manually shutdown the system by closing steam isolation valves, shutting down feed jets, and stopping the feed pumps.

- The control room operator can manually SCRAM the system at any time by activating the SCRAM button in the control room.

- Operator round sheet readings from other instruments are taken and recorded to provide early indication of potential problems and allow the operators to take corrective actions regardless of the status of the PLC.

- Head tank depletion levels, which are used to calculate the flow ratios, can be read manually and corrective actions taken by the operators to bring any stream out of tolerances back into the accepted limits or to shut the stream flow down.

Plutonium solutions stored in Tank 18.3 were discarded in the 2002 timeframe. The H–Canyon DCA (Ref. 37) establishes a concentration limit of 11.5 g/l U, based on Tanks 18.3 and 18.4 containing only uranium solutions, in Appendix A containing the TSs.

An inadvertent criticality can occur from overconcentration of fissile material during either process operations or long term storage of a fissile material solution. The fissile materials stored and processed in H–Canyon and OF–H are significantly below the maximum fissile material concentration limits given in the DCA. During processing operations short–term storage of the fissile material solution is required in various tanks. The tanks used for interim storage do not have an external heat source (e.g., steam) and the fissile material solution is normally very dilute (per flowsheet requirements) in these tanks. Additionally the fissile material concentration limits are very conservative, and no criticality events have occurred in either F–Canyon or H–Canyon during processing operations. Therefore, an inadvertent criticality from overconcentration by natural evaporation only of the fissile material in those tanks without an external heat source during the short–term process storage stage is considered a BEU event.

Concentration of a fissile material solution by evaporation is a very slow process. The dilute fissile material solutions stored and processed in H–Canyon and OF–H take weeks to concentrate enough to exceed the always safe concentration limits in the DCA (Ref. 37). The DCA identified specific controls to prevent overconcentration from natural evaporation of the stored solutions. These controls are applicable to the tanks where the fissile material is held in long–term storage.

Short–term process storage is defined as storage in a single process vessel (tank) or a series of process vessels for a maximum of 70 days between processing steps based on the natural evaporation rates in the tanks (Ref. 37). The 70–day period starts when the fissile material solution is removed from one of the discrete processing operations (e.g., Dissolving, Head End, or the solvent extraction cycles). The 70–day period ends when the fissile material solution is processed in one of the discrete processing operations and the 70–day cycle starts over. Short–term processing specifically does not mean or allow storing a fissile material solution in a process vessel for up to 70 days, then moving it to another storage location and starting the clock again. If the fissile material is stored in a single tank or series of tanks for more than 70 days, the appropriate DCA or TSR controls shall be applied. The appropriate DCA or TSR controls shall always be in place for long term storage (above 70 days). The criticality prevention controls are required only for those tanks that contain greater than the ever safe fissile mass (i.e., 700 g U–235 and 450 g Pu–239 or the equivalent in mixed isotopes).

Overconcentration is a concern only for those tanks that contain greater than the ever safe fissile material mass. For those tanks without steam heat in which the fissile material solution is held for short–term storage between process stages, overconcentration by natural evaporation is not a significant concern because of the very slow nature of the process. Additionally, normal process operations and procedures require monitoring of the tanks and tank contents. This normal process monitoring requirement will indicate potential overconcentration of the fissile material solution so that appropriate preventive measures can be taken to maintain the fissile material concentration below the acceptable limits. Since overconcentration of the fissile material by natural evaporation will not occur during short–term process storage, any TSR and DCA controls specified for those tanks will not be required or implemented. It is important to note that the

controls (typically sampling, liquid level or specific gravity instruments) which would be designated as DSA level controls in the TSR will still be available and operational. However, for short–term process storage, these controls will not be designated as TSR (i.e., DSA level) controls. The TSR identifies all tanks that will be used for storage of fissile material solutions and the appropriate controls for these tanks if they will store material longer than 70 days. Tanks that are currently used and others that will be used for long term storage have and will continue to have the appropriate DSA level controls applied to them. For example, a new LCO (i.e., Plutonium Tank Instrumentation, LCO 3.1.18) was developed to address a potential common mode failure for calculating the correct mass of plutonium solids. This LCO specifies controls necessary to prevent a criticality in the Canyon Plutonium Tanks 11.1, 12.1, 16.3, and 18.3 by ensuring reliable liquid level instrumentation is used to determine the amount of Pu–239 solids mass in the tanks. The Tank Liquid Level Instrumentation is used to determine the solution volume (concentration per liter times number of liters) in the tank.

A new LCO (3.1.19) was added to address a specific criticality scenario for 1C Bank after a potential occurrence in similar equipment in F–Canyon. In order to prevent this type of occurrence, a weir pressure interlock has been installed that will stop the 1AF feed to the bank, preventing the possibility of a reflux condition.

Previously, the DCA (Ref. 37) discussed scenarios in which a leak develops in the transfer pipe trough through which solutions containing Pu–239 are transferred from HB–Line to the H–Canyon tanks. Additional tanks in H–Canyon will be used to support HB–Line Phase II operations with the controls necessary for each tank delineated in the appropriate DCA revision. The DCA scenario requires conditions where a slow undetectable leak develops and the Pu–239 gradually builds up until a critical mass and configuration are reached. N–NCS–H–00074 (Ref. 60) evaluated the probability of a small leak reaching a criticality in the pipe trough as a BEU event. This old pipe trough (duct) is being abandoned for fissile material transfers and replaced with four new jacketed pipelines. The jacketed pipe is composed of a jacket surrounding a transfer pipe as a pipe–in–pipe design, which is listed as a DF in this SAR. The outer pipe (i.e., jacket) has a maximum diameter less than the single parameter maximum cylinder diameter limit, for which no potential criticality scenario is identified.

Mitigators that reduce the potential consequences of an inadvertent criticality include the NIMs and Remote Bells. Facility modifications and operations, or current facility design (e.g., lack of NIMs in a specific location) may affect the NIM Bell audibility or otherwise interfere with the ability of the operators to detect the NIM alarm signals or to know a criticality has occurred. Therefore, facility modifications must be controlled as specified in Section 6.5.9.3 of this SAR. Compensatory administrative controls such as those described in Section 6.5.9.3 for inaudible or missing NIMs (e.g., painted floor markings in the Hot Crane walkway and the Section 15 Personnel Tunnel) are considered to be controls that limit facility worker personnel exposure to ionizing radiation during a criticality. The controls that limit worker exposure within the 12–Rad zones are usually controlled by other programs (e.g., Rad Con or Configuration Management). Specific controls to prevent worker exposure in a 12–Rad zone include administrative controls to 1) prevent personnel access to the affected areas of the Section 15 Personnel Tunnel during either the 15H or 15W Sump flushing operations; 2) prevent personnel access to the Section 5W Cell Covers during neutralization operations in Tank 9.8; and 3) verify that Fire Curtains are in place between Sections 6W and 7W, and between Sections 7W and 8W when access is permitted

to the Section 5W Cell Covers. This third AC is applicable only when a credible criticality scenario exists in Tanks 8.8, 9.5 or 9.6. Also, another AC restricts personnel access to the Warm Canyon Crane Access Walkway and Warm Crane Cab when the crane is in Sections 2W–18W, which are defined as "Areas Not Normally Occupied" per reference 102. Personnel who are granted access to an area defined as "Areas Not Normally Occupied" shall be equipped with alarming personnel dosimeters capable of quickly detecting and alarming to a nuclear criticality. Another control that prevents worker exposure within a 12–Rad zone is the use of NIMs in the Section 9 Personnel Tunnel below the Section 9H and 9W Sumps. These NIMs alert personnel to a criticality event in one of the sumps. A DiD system that will mitigate a criticality in OF–H A–Line is the OF–H NIM/A–Line Pump interlocks. The canyon building structure is a mitigator because the concrete walls of the canyon building serve as a shield to protect facility workers from the radiation exposure. An AC that also mitigates the consequences of a criticality event is the Structural Integrity Program. The consequences of a criticality in H–Canyon or OF–H to offsite and onsite receptors are classified as low. The consequences of a criticality in the Warm Canyon or the exhaust air tunnel to the facility worker are classified as medium. The consequences to the facility worker of a criticality in OF–H are classified as high. The outside facilities do not have adequate shielding to mitigate radiation exposure to the facility worker.

The DCA has specific concentration and mass limit controls for the H–Canyon and OF–H processes. Calculation S–CLC–H–00601 (Ref. 61) determined that by applying the upstream mass and concentration controls , a criticality in the GP evaporator systems is a BEU event. Calculation X–CLC–H–00478, which addresses the ARU system, concludes that a criticality is considered an incredible event by applying the upstream concentration, sampling, and mass controls (Ref. 109). Since an inadvertent criticality in these systems is BEU, mitigating devices and a criticality detection and alarm system (e.g., NIMs) are not required.

The EUS Tank operation was reviewed to determine if a criticality was a credible event. The cumulative frequency of all identifiable initiating sources, including short and long–term evaporation, was estimated to be BEU (Ref. 110). Criticality safety is provided by the following:

- Controlling the uranium concentration of the uranyl nitrate solutions.
- Allowing no precipitating agents in any of the tanks or in the sumps.
- Controlling the organic (TBP) content in the uranyl nitrate storage tanks.
- Preventing the solutions from freezing.
- Disconnecting the steam (DF) to the heat exchanger to prevent rapid evaporation and overconcentration of the HEU solution.

The identified preventive or mitigative controls reduce the Scenario Class I event frequency or consequences. For those criticality events designated as Scenario Class III in the PHA, the preventive and mitigative features will not further reduce this event category. In those areas where the consequences are expected to be high (e.g., OF–H), the frequency is expected to be in the Extremely Unlikely category for a Scenario Class II event. For those cases where the frequency is expected to be in the Unlikely category (e.g., Hot or Warm Canyons), the consequences are medium to the facility worker resulting in a Scenario Class II event.

8.3.2.5 Loss of Containment

8.3.2.5.1 LOSS OF CONTAINMENT – TRANSFER ERROR TO OUTSIDE FACILITIES

The H–Canyon PHA (Ref. 8) (PHA Events DV–04, HE–10, SE–07, EV–11, IE–12, RR–08, and WD–11) considers a transfer error to Outside Facilities to be a significant event because radiological materials are released to the environment. There are a very limited number of direct piping routes from the canyon to the Outside Facilities. The PHA determined a transfer error to Outside Facilities was in the Unlikely frequency category. The event consequences were determined to be medium for all onsite and offsite receptors for all processes except Solvent Recovery. For Solvent Recovery, the consequences are low to all receptors. The difference in the event consequences for the different processes is based on the radioisotopes and concentration of the isotopes in the solution. A major difference in the consequences can be explained by the presence or absence of the actinide isotopes, particularly Pu–238. An Unlikely frequency and medium consequences make this a Scenario Class II event for all processes except Solvent Recovery where an Unlikely frequency and low consequences makes it a Scenario Class III event. When the active systems and ACs (described below) are considered, the event frequency remains Unlikely. The consequences remain medium for all receptors. The transfer error to outside event remains a Scenario Class II event.

8.3.2.5.1.1 Release Pathways and Scenarios

Inadvertent transfers of highly radioactive solutions from H–Canyon to the Outside Facilities represent a significant release pathway due to the elimination of the mitigation provided by the canyon structure and ventilation system. Transfer errors are defined as the movement of a material to an unintended location. A transfer error to the outside can occur when canyon transfer piping is incorrectly connected to a pipe route that leads to process equipment in the Outside Facilities. In this scenario, the process tank with the highest source term in each unit operation is inadvertently transferred to a basin tank in the outside facilities, which is assumed to overflow. Radioactive material is released primarily through evaporation of the spilled liquid and the aerosol created when the spilled liquid splashes on the concrete basin floor. For FWR, the event is a transfer of the contents of Hot Canyon Tank 7.3–1 to the B1–2 Basin Tank without a subsequent liquid release from the basin tank. This event is postulated because the B1–2 Tank has the capacity to hold the entire contents of Tank 7.3–1 without exceeding the 10 inch freeboard limit maintained in Basin Tank B1–2.

No single human error or equipment failure has been identified that can result in the transfer of H–Canyon solutions to OF–H. Multiple mistakes and/or equipment failures are required before a transfer error to outside can occur. Piping is normally in place; however, the piping (jumper) is occasionally removed to replace vessels, repair leaks, relieve pluggage, or reroute flows. Jumpers have not always been replaced in the proper configuration, especially flexible type jumpers. Improper recovery from overflows, leaks, or spills to the canyon floor can place highly radioactive materials into vessels that normally would contain low level material and that are piped directly to the OF–H.

8.3.2.5.1.2 Preventive and Mitigative Features

The most likely scenario is that the material will be inadvertently transferred to one of the B–Basin tanks or the F1-6 Basin tanks and overflow to the basin. As long as the radioactive material is still in the basin tank, it is still in primary confinement and has not been released to the environment. ACs that prevent transfer errors are the independent verification of all flexible jumper installations and all piping route changes in the canyon and the Configuration Control Program. DiD controls, such as piping system design, improved conduct of operations and strengthened procedural compliance assist in preventing transfer errors to Outside Facilities. As previously mentioned, multiple errors are required for a transfer error to Outside Facilities to occur.

The engineered controls that mitigate the consequences of a transfer error to Outside Facilities are the SS B–Basins and the SC F1-6 Basin, which contain the spilled liquid until the material can be recovered. B-Basins are below grade and a transfer error to the B-Basins could not result in a liquid release to the surface waters but does result in an unfiltered ground level airborne release which could impact workers. The F1-6 Basin is above grade and prevents a release of radioactive liquid to the offsite environment from an overflow involving Tank F1-3 or F1-4. A release to the F1-6 Basin does result in an unfiltered ground level airborne release which could impact workers. A liquid release to offsite is qualitatively assumed to challenge the offsite EG of 25 rem. Additionally, containing the spilled liquid prevents it from forming a larger evaporative pool that would increase the impact on workers. The F1-6 Basin has a sufficient free volumetric capacity that it will contain the spilled liquid preventing it from reaching the surface waterways. Another SC system that prevents a spill or release during a transfer of waste solution during transfers from H–Canyon to the HLW Tanks consists of the Exterior Waste Header Connection Legs and the Concrete (Mummy) Casing which surrounds the connection legs. These features prevent a release of highly concentrated waste solution during a transfer to the HLW tanks. ACs that mitigate the consequences include: a limit of 1 g/l Pu–238 in solutions, a FWR anion column load limit of 800 g Pu–238, and a maximum of 5 kg Pu–238 in any single tank to protect the source term; spill response procedures; evacuation of the OF–H area if a spill occurs; and wearing of prescribed protective clothing as detailed in the appropriate procedures.

These additional engineered and Administrative Controls do not reduce the transfer error to OF–H frequency and the event remains in the Unlikely frequency category. The consequences remain medium to all receptors. A medium consequence with an Unlikely frequency remains a Scenario Class II event.

Planned missions for H–Canyon do not require FWR operations. Therefore, the controls described below are included in this SAR for information only, and implementation is not required. See the note at the start of Section 8.3.2.2.2.

The engineered control that mitigates the consequences of a transfer error to OF–H from FWR operations is the B–1 Basin. An SS system that prevents overflow of FWR solution to the B-1 Basin is the Tank B1–2 Liquid Level Measurement and High Liquid Level Alarm. An AC that prevents the event for FWR is the procedural requirement to maintain a 10–inch minimum freeboard in the tank. These controls mitigate the event by alerting operators to a potential inadvertent transfer and allowing some room in the OF–H Basin Tank to collect some

erroneously transferred material before the material escapes the basin tank to the basin floor. By containing some or all of the radioactive solution in the B1–2 Tank, the amount of material that can become airborne is reduced, which reduces the accident consequences.

8.3.2.5.2 LOSS OF CONTAINMENT – UNCONTROLLED REACTION – RUTHENIUM VOLATILIZATION

The H–Canyon PHA (Ref. 8) (PHA Events DV–05 and HE–06) considers an uncontrolled reaction in the H–Canyon dissolver and Head End tanks to be a significant event because radioactive materials are released. Note that the PHA identifies these events as Hazard Category III events based on an Anticipated frequency and low consequences to all receptors. Even though Category III events are not required to be carried forward to the SAR, since the previous analysis of this event used a historical release of 30 Ci Ru–106 while a new analysis used a maximum release of 136 Ci Ru–106, it is included in the SAR to establish the necessary controls to prevent or mitigate the event. When the active systems and ACs (described below) are considered, the event frequency remains in the Anticipated category. The consequences remain low for all receptors. An uncontrolled reaction ruthenium volatilization in the dissolver or Head End tanks remains a Scenario Class III.

8.3.2.5.2.1 Release Pathways and Scenarios

Because of the extended cooling time of the SRS reactor fuels, greater than 2,500 days, most of the ruthenium (Ru–103 and Ru–106) has decayed away. The Ru–103 has gone through over 10 half–lives based on a half–life of 39.3 days. The Ru–106 has gone through over 9 half–lives based on a half–life of 368.2 days and the actual cooling time of the fuel. Note that the Ru–106 has gone through approximately seven half–lives based on the minimum cooling time of 2,500 days. After seven half–lives over 99% of the radioactive material is gone. There is very little ruthenium (i.e., no Ru–103 and very little Ru–106) left in any of the fuels remaining to be processed in H–Canyon.

In addition to the ruthenium loss from decay, one of the conditions necessary for a ruthenium volatilization accident is no longer present in H–Canyon. To have a ruthenium volatilization accident in Head End, a permanganate strike must occur. H–Canyon is presently not doing and does not plan to do permanganate strikes in the future. This eliminates one condition necessary for this type accident.

A permanganate strike may be completed on new fuels containing Ru–106 processed in future H–Canyon operations. Therefore, this accident analysis is left in the SAR for completeness and to ensure that the controls necessary to prevent the accident are recognized and maintained.

A ruthenium volatilization event can occur in Dissolving or Head End. The volatilization reaction will only occur in conditions that cause the ruthenium to oxidize, e.g., in a highly oxidizing solution. In the dissolver, boiling nitric acid (>3M), without uranium dissolution occurring, creates the oxidizing condition to form volatile ruthenium oxides. Under normal conditions, uranium dissolution creates nitrogen oxides that prevent the oxidizing condition from

forming. If the uranium dissolution is not occurring, the reducing agents such as the nitrogen oxides are not present in sufficient quantity to prevent the ruthenium from oxidizing to a more volatile state. In the Head End process, the necessary conditions are typically created by adding the permanganate solution to the strike tank first or by excess permanganate. The oxidation reaction proceeds slowly from the normal ruthenium valance state of Ru^{+3} to Ru^{+4}. From the +4 state the oxidation proceeds rapidly through the Ru^{+6} to the Ru^{+8} state where it reacts with oxygen to form the very volatile compound RuO_4 The RuO_4 is then released as a gaseous effluent through the dissolver off–gas system if the reaction occurs in the dissolver, or through the PVV System and the canyon exhaust system through the sand filter if the reaction occurs in Head End. The difference between the release pathways is that the dissolver offgas system does not go through the sand filter while any material released from Head End goes through the sand filter. Both release points are at the top of the 291–H stack. DPST–80–254 (Ref. 62) describes the ruthenium chemistry based on a 30 Ci ruthenium release from the F–Canyon dissolver in 1978. Other SRS ruthenium releases are documented in the 200 Area Databank.

8.3.2.5.2.2 Preventive and Mitigative Features

The two isotopes of ruthenium which are radioactive contaminants if they are released to the environment are Ru–103 and Ru–106. Because of its short half–life, the Ru–103 has decayed to insignificant quantities in the SRS reactor fuel that will be processed in H–Canyon. Since most of the offsite fuels to be processed have cooled for an extended period, most of the Ru–103 in the offsite fuels has also decayed away. Therefore, Ru–103 will not be considered further in this evaluation. Since the SRS reactor fuels have cooled longer that 2,500 days, S–CLC–H–00583 (Ref. 63) indicates that the worst case assembly which will be processed in H–Canyon will contain a maximum of 136 Ci Ru–106 in a dissolver charge. Addendum 1 to this SAR gives the consequences for processing this fuel as a worst case event. Since the Ru is released as a volatile gas, there are no SC or SS systems that will prevent or mitigate this event in the canyon dissolvers. The only control that will mitigate the event is an AC that limits the maximum number of curies of ruthenium allowed in a single dissolver charge. For a ruthenium volatilization event in Head End, the canyon exhaust system may provide some mitigation. Note that permanganate strikes are no longer included in the H–Canyon Head End operations. This eliminates one of the conditions necessary for a ruthenium volatilization accident.

DiD measures which will prevent or mitigate the event include the normal process controls on dissolver acidity and chemical addition steps and acidity levels in the Head End tanks. Other DiD systems include the ruthenium filter on the Head End strike tank when permanganate is added to the strike tank.

The identified preventers and mitigators will not reduce the event frequency and it remains in the Anticipated category. The mitigators do not reduce the consequences from low for any receptor. Therefore, the event remains a Scenario Class III event.

8.3.2.5.3 LOSS OF CONTAINMENT – UNCONTROLLED REACTION HYDROXYLAMINE NITRATE AND NITRIC ACID

The H–Canyon PHA (Ref. 8) identified the class of uncontrolled reactions from various chemicals on the Third Level that could cause serious injury to the facility worker. However, it did not specifically call out the potential for an uncontrolled reaction from HAN and nitric acid, which would be included in the more generic class, identified in the PHA. Because of the significance of the HAN–Nitric acid reaction event (May 1997) at the Hanford site, the potential for a more significant consequence (e.g., worker fatality) is now receiving additional emphasis as a significant event in H–Canyon. If the PHA had considered this reaction, it would have been determined to be in the Anticipated frequency category. The passive feature that mitigates the event is the canyon building structure. The consequences of this event would be high to the facility worker and low to all other receptors onsite and offsite. The combination of an Anticipated frequency and high consequences makes this a Scenario Class I event. When the active systems and ACs (described below) are considered, the event frequency is reduced to BEU.

8.3.2.5.3.1 Release Pathways and Scenarios

Under certain conditions when HAN and nitric acid are mixed together, the HAN can and will decompose autocatalytically. The rate of the HAN decomposition is based on several factors including the nitric acid strength and the solution temperature. If the uncontrolled reaction rate is rapid enough, the decomposing HAN has the potential to overpressurize the vessel in which the solution is stored. If the vessel is not adequately vented to relieve the pressure from the gaseous products generated in the reaction, a pressure type explosion could occur in the vessel. Since the process starts out as an uncontrolled reaction, preventing the conditions that lead to the autocatalytic reaction or having sufficient vent area on the process vessels will prevent the pressure type explosion that could be created.

8.3.2.5.3.2 Preventive and Mitigative Features

All the HAN has been removed from H–Canyon and OF–H. There are also no plans to use HAN in the HM Process in H–Canyon for the remaining fuels to be processed. The HAN was used in the Second Product Cycle during the recovery of plutonium. There are no plans to recover plutonium in Second Product Cycle in the future. Since HAN is no longer available in H–Canyon and OF–H and will not be used in the HM Process, it is not credible to have the HAN–Nitric Acid uncontrolled reaction in H–Canyon and OF–H. An AC that requires that HAN not be stored or used in either H–Canyon or OF–H protects the BEU frequency of the event in H–Canyon and OF–H.

Since the HAN–nitric acid uncontrolled reaction is a BEU event; specific mitigators are not required for this event.

8.3.2.5.4 LOSS OF CONTAINMENT – UNCONTROLLED REACTION ON THIRD LEVEL

The H–Canyon PHA (Ref. 8) (PHA Event CF–05) considers an uncontrolled reaction in the H–Canyon Third Level Head Tanks to be a significant event because hazardous chemicals are released. The passive engineered feature that prevents this event is configuration control of the ferrous sulfamate piping that prevents reactive chemicals from mixing. Although this event has occurred previously, the facility worker consequences have been low in all recorded events. It is postulated that a more energetic or larger reaction could occur that would have medium (serious injury but no fatality) consequences to the facility worker. This more energetic event is expected to be in the Unlikely frequency category. An Unlikely frequency and medium consequences make this a Scenario Class II event. When the active systems and ACs (described below) are considered, the event frequency remains in the Unlikely category. The consequences remain medium for the facility worker. An uncontrolled reaction in the Third Level Head Tanks remains a Scenario Class II.

8.3.2.5.4.1 Release Pathways and Scenarios

The dominant hazards are nitrous oxide and nitrogen dioxide from unintentional reactions of concentrated nitric acid with a variety of chemicals. A number of such reactions have occurred in the past as a result of mixing incompatible materials, inadequate rate of addition control, inadequate concentration control, inadequate temperature control, inadequate agitation, reverse order of chemical additions, or transfer error. Many of these reactions occurred in the decontamination solution makeup tank, Tank 5E. Tank 5F has since been converted to decon solution makeup to lessen the probability that incompatible chemicals will be mixed. When the incompatible chemicals are mixed, hazardous materials are released as gases or as liquids. These reactions are not expected to create sufficient pressure to cause the tank to rupture, and release the entire contents of the tank. Vapors from these reactions can be released directly into the Third Level corridors. Some liquids are normally released as a result of an eructation or burping action of the uncontrolled reactions. Liquids can splash through vents into the Second Level. Both of these areas are normally occupied by personnel. Injuries that have been experienced include skin or eye irritation or minor chemical burns. SRS experiences with uncontrolled reactions are documented in S–CLC–H–00221 (Ref. 2) and in WSRC–TR–94–0552 (Ref. 64) and the 200 Area Data Bank.

8.3.2.5.4.2 Preventive and Mitigative Features

An AC that prevents this event is the requirement for independent verification of the valve lineups before chemicals are transferred to the Third Level Head Tanks, where the possibility for incompatible chemicals to mix exists. An AC that prevents this event is configuration control of the ferrous sulfamate piping system design and construction. The piping system is designed, constructed, and controlled so chemicals that can react with one another are not normally piped to the same tank. DiD controls to prevent this event are improved conduct of operations to include increased awareness of the need for verbatim procedure compliance and improved valve labeling.

ACs that mitigate the event include Third Level spill response procedures, the Radiation Protection program that requires the use of Personal Protective Equipment (PPE) and evacuation plans for facility workers. Other PSM programs, such as IH, that include PPE and escape routes also mitigate the event. It is assumed that facility workers will evacuate the area of their own volition shortly after initial exposure because nitric oxides are strong respiratory irritants. The RVV System is a DiD control which will mitigate the event. Another DiD feature that will mitigate this event is the Third Level drain lines which drain any spilled liquid directly to the appropriate drain tank on the canyon First Level.

The identified preventers will not reduce the event frequency and it remains in the Unlikely category. The mitigators do not reduce the consequences from medium for the facility worker. Therefore the event remains a Scenario Class II event.

8.3.2.5.5 LOSS OF CONTAINMENT – UNCONTROLLED REACTION IN OUTSIDE FACILITIES

The H–Canyon PHA (Ref. 8) (PHA Event CP–02) considers an uncontrolled reaction in OF–H to be a significant event because hazardous chemicals are released. The AC that prevents this event is configuration control of the ferrous sulfamate piping. The engineered features that prevent this event include separation of the facilities which makes it difficult to inadvertently mix incompatible chemicals, and different tanks, lines, pumps, and unloading stations used for different chemicals. Although this event has occurred previously, the consequences to the facility worker have been low in all recorded events. It is postulated that a more energetic or larger reaction could occur that would have medium (serious injury but no fatality) consequences to the facility worker. This more energetic event is expected to be in the Unlikely frequency category. An Unlikely frequency and medium consequences make this a Scenario Class II event. When the active systems and ACs (described below) are considered, the event frequency remains in the Unlikely category. The consequences remain medium for the facility worker. The uncontrolled reaction event in OF–H remains a Scenario Class II event.

8.3.2.5.5.1 Release Pathways and Scenarios

The dominant hazards are nitrous oxide and nitrogen dioxide from unintentional reactions of concentrated nitric acid with a variety of chemicals. A number of such reactions have occurred in the past from mixing incompatible materials, inadequate rate of addition control, inadequate concentration control, inadequate temperature control, inadequate agitation, reverse order of chemical additions, or transfer error. When the incompatible chemicals are mixed, hazardous materials are released as gases or as liquids. These reactions are not expected to create sufficient pressure to rupture the tank, and release the entire contents of the tank. Vapors from these reactions are released directly into the outside atmosphere through open vents on the tanks. Some liquids are normally released as a result of an eructation or burping action of the uncontrolled reactions. Liquids can splash into the dike areas around the tanks. The OF–H Cold Feed Preparation area and other areas in OF–H are normally occupied by personnel. Injuries that have been experienced include skin or eye irritation or minor chemical burns. SRS experience with uncontrolled reactions are documented in (Ref. 2, 64) and the 200 Area Data Bank.

8.3.2.5.5.2 Preventive and Mitigative Features

An engineered control that prevents this event is the OF–H Basin design. An AC that prevents this event is configuration control of the OF–H ferrous sulfamate piping design and construction. The piping is designed so that only certain chemicals are pumped to certain tanks (e.g., chemicals that are reactive are not normally pumped to the same tank). In case of a tank overflow, the tanks containing chemicals, which will react to produce large NO_x volumes, overflow to different OF–H Basins and sumps. Overflowing to different basins and sumps prevents mixing of the reactive chemicals. An AC that prevents this event is the requirement for independent verification of the valve lineups before chemicals are transferred to or from the OF–H tanks. DiD controls to prevent this event are related to improved conduct of operations to include increased awareness of the need for verbatim procedure compliance and improved valves labeling.

A feature that mitigates the consequences of an uncontrolled reaction in OF–H is that the facility is located outside, which will assist in the rapid dispersion of the toxic vapors produced in the reaction. A DiD system that will mitigate the event is the RVV system. This system pulls vapors from the affected tank reducing the vapor concentration and personnel exposure to the vapors. ACs that mitigate the event include periodic (every 18 months) inspections to ensure the integrity of the OF–H Basin (curbs and dikes around tanks) where the uncontrolled reactions can occur, OF–H spill response procedures, the use of PPE as necessary for work in OF–H, and evacuation plans for facility workers. It is assumed that facility workers will evacuate the area of their own volition shortly after initial exposure because nitric oxides are strong respiratory irritants.

The identified preventers will not reduce the event frequency and it remains in the Unlikely category. The consequences remain medium for the facility worker. The event remains a Scenario Class II event.

8.3.2.5.6 LOSS OF CONTAINMENT – RELEASE OF ENTIRE CONTENTS OF ONE OR MORE TANKS IN BULK CHEMICAL STORAGE OR ACID RECOVERY UNIT IN OUTSIDE FACILITIES

The H–Canyon PHA (Ref. 8) (PHA Events AR–05 and BC–05) considers the release of the entire contents of one or more of the chemical storage tanks in the Bulk Chemical Storage or ARU in OF–H to be a significant event because hazardous chemicals are released to the environment. The passive engineered feature that prevents this event is the OF–H tank design. The H–Canyon PHA determined the release of the entire contents of one or more tanks was in the Unlikely frequency category. The consequences of this H–Canyon event were determined to be high for the facility worker and low to the onsite worker and offsite public.

An Unlikely frequency and high consequences make this a Scenario Class I event for H–Canyon. When the active systems and ACs (described below) are considered, the event frequency remains in the Unlikely category. The H–Canyon consequences are reduced to medium for the facility worker, and the event becomes a Scenario Class II.

8.3.2.5.6.1 Release Pathways and Scenarios

The Bulk Chemical Storage Facility and the ARU were identified because of the concentration and quantity of chemicals present. The event of concern is a catastrophic leak or spill of chemicals from causes other than external impacts or natural phenomena events. Releases of chemicals due to external impact and natural phenomena are described in Sections 8.3.2.6 and 8.3.2.7. The initiating events or causes for this event include tank corrosion, catastrophic failure of a transfer line, valving error, equipment malfunction, and operator error. Other events may contribute or cause a release of the entire contents of one of the 9 feet by 36 feet bulk storage tanks in Bulk Chemical Storage or the ARU. The scenario assumes that an initiating event occurs and that the entire contents of the tank are released to the environment (basins and concrete pads in OF–H). The chemical evaporates or vaporizes and contributes a respiratory dose to the receptor. For the facility worker, the liquid chemical can splash or spray the worker causing chemical burns or ingestion of the chemicals. Some chemicals (e.g., strong nitric acid, and sodium hydroxide) could cause a fatality if the worker breathes the fumes or gets sprayed or splashed with enough of the material.

8.3.2.5.6.2 Preventive and Mitigative Features

The passive engineered feature that prevents leaks and spills is the tank design. The Bulk Chemical Storage tanks containing aluminum nitrate and nitric acid are constructed of stainless steel. The remaining Bulk Chemical Storage tanks (caustic and solvent) are constructed of carbon steel. Process vessels and tanks in the ARU are constructed of stainless steel. Other preventive engineered features or ACs that would prevent the event have not been identified.

DFs that mitigate the consequences of a chemical leak or spill are the 600 Basin and the Cold Chemical Storage Area Basins. ACs that mitigate the event include periodic (every 18 months) inspections to ensure the integrity of the OF–H Basin (curbs and dikes around tanks) where the chemical leaks or spills can occur, the wearing of personnel protective equipment when working with chemicals, evacuation of OF–H, and spill response procedures when a spill occurs. These additional controls will reduce the consequences to a facility worker from high to medium. Consequences to offsite and onsite receptors remain the same.

The controls identified will not prevent the event and the frequency category remains Unlikely. ACs and passive DFs reduce the consequences to the facility worker to a medium consequence. A medium consequence with an Unlikely frequency reduces this event from a Scenario Class I to a Scenario Class II.

8.3.2.6 Inadvertent Personnel Exposure to Ionizing Radiation

8.3.2.6.1 SAMPLE AISLE INTERNAL EXPOSURE

The H–Canyon PHA (Ref. 8) (PHA Event MA–07) considers potential internal exposure in the Sample Aisle to be a significant event because the facility worker could receive a significant internal radiological material dose from a puncture wound. The PHA determined the puncture

wound scenario to be in the Anticipated frequency category. The consequences of this event were determined to be high for the facility worker and low to the co–located worker and offsite public. An Anticipated frequency and high consequences make this a Scenario Class I event. When the ACs are considered, the event frequency is reduced to Unlikely. The consequences remain high to the facility worker, and the event remains a Scenario Class I.

8.3.2.6.1.1 Release Pathways and Scenarios

Canyon samplers are used to draw a small volume of solution from a process vessel for subsequent analysis for chemical and radionuclide content and properties. Sample Aisles are located on the Third Level and run on either side of the Feed Tank Gallery. Samples are pulled by vacuum created by an air jet through a supply needle to the sample vial in a sampling box. RCO personnel take readings to ensure that operators are not exposed to high levels of radiation.

The most likely scenario that would expose a facility worker to high levels of radiation or contamination is a puncture wound from a sample needle. The 200 Area Data Bank documents two puncture wounds caused by sample needles. These events occurred in 1957 and 1968 during maintenance operations. There have been no subsequent puncture wounds. The event is most likely to occur when the needle shroud is missing or broken, when damaged needles are being replaced, or when damaged or broken sample vials are being removed from the sampler. The sharp needle pierces the operator's protective clothing and skin. Radioactive contamination remaining on the needle is injected into the operator's hands or arm where the needle penetrated the body. Injection of even small amounts of Pu–238 solution into the blood stream of a facility worker could lead to a fatality. Therefore, the puncture wound consequences were classified as high. Puncture wounds from other process solutions containing Pu–239, Np–237, or uranium are less severe because of lower specific activities for these isotopes.

The other potential exposure mechanism for the Sample Aisle operator is from the high radiation (i.e., beta–gamma) field generated by the high activity fission products in the Hot Canyon. This scenario is typically present only in the Hot Sample Aisle when processing irradiated HEU because of the requirement to sample these Hot Canyon solutions. It is assumed that the appropriate shielding (e.g., doorstop) is not available or the operator is too close (distance) to the exposed sample vial or solution. The high radiation field associated with the Hot Canyon samples exposes the operator to the potential to receive a high radiation dose. Fatalities are not expected from the exposure. However, the operator might receive a serious injury (i.e., require hospitalization). Radiation rates from processing unirradiated HEU are much lower and the consequences of an exposure are low.

8.3.2.6.1.2 Preventive and Mitigative Features

ACs require verification of the presence and operability of the sampler needle shrouds or doorstops. For direct sampling, a plastic shroud is installed to cover the sample needles. The sampler needle shroud provides a physical barrier between the needles and an operator's hand. The sampler doorstop is a shielded container that provides a remote method for obtaining samples. The doorstop shielding protects the operator from the beta–gamma radiation, from the

fission products in the Hot Canyon, and from the high neutron fields from other isotopes. If the high radiation fields or high neutron sources are not present, the doorstop is not required during sampling. Either the doorstop or the needle shroud is used each time a sample is taken. These features are verified to be present each time a sample is taken by the H–Canyon sampling procedures. ACs include verification of a shroud or doorstop prior to sampling and instructions on how to obtain a sample. Neither peer nor independent verification of the presence of an operable needle shroud or a doorstop is required. The operator verification of an operable or unbroken shroud or doorstop is all that is required to meet the AC.

ACs that prevent puncture wounds during sampler maintenance are personal protective clothing (leather gloves for working near unprotected needles). Additionally, H–Canyon procedures provide instructions on how to change the sample needles using a special needle replacement wrench. The wrench has a cup that covers the needle while it is being removed or replaced. Operators must be trained on this procedure per the Training Program described in Section 6.0 of this SAR before they are allowed to perform this operation.

These ACs will lower the frequency of the event from the Anticipated to the Unlikely category.

The Radiation Protection Program described in Section 6.10 of this SAR provides guidance about RCO personnel presence during sampling operations. The presence of RCO personnel will minimize the consequences of a puncture wound by ensuring prompt action to cleanse the wound and swift transport to medical facilities for chelation treatments. Other Rad Con controls require the use of protective personal clothing and equipment. The protective clothing and equipment mitigate the event by limiting the ability of the needle to penetrate deeply into the body. These controls, while effective, are not considered sufficient to reduce the consequences of a sample needle puncture wound to the worker; therefore, the consequences remain high for the facility worker. A DiD item that limits personnel exposure to the ionizing radiation are facility procedures and access requirements that limit access to the Sample Aisles.

WSRC completed an evaluation of this scenario for the F–Canyon SAR to determine if additional cost–effective controls could reduce the severity of this event. This evaluation is documented in NMP–ENG–94–0182 (Ref. 65) and concluded that existing measures are effective in minimizing the risk to personnel from sample needle punctures. No cost–effective means were identified for any further reduction of risk. This report is also applicable to H–Canyon.

These controls reduce the puncture wound frequency to Unlikely. However, because very small amounts of solution will expose an operator to unacceptable internal exposure levels, the consequences cannot be reduced further and the consequence remains high. Therefore, this event remains Scenario Class I.

8.3.2.6.2 INADVERTENT PERSONNEL RADIATION EXPOSURE IN GANG VALVE CORRIDOR DUE TO SUCKBACK OF RADIOACTIVE MATERIAL CONTAINED IN GANG VALVE PIPING

The H–Canyon PHA (Ref. 8) (PHA Events DV–08, HE–09, SE–11, EV–06, RR–07, and WD–10) considers an inadvertent radiation exposure in the GVC from a suckback to be a significant event because the facility worker will receive a significant radiological dose. The PHA determined the event to be in the Anticipated frequency category. The consequences of this event were determined to be medium for the facility worker and low to the co–located worker and offsite public. An Anticipated frequency and medium consequences make this a Scenario Class I event. When the AC (described below) is considered, the event frequency remains in the Anticipated category. The consequences are reduced to low for the facility worker and the event becomes a Scenario Class III event.

Processing of unirradiated HEU has shown a reduction of about two orders of magnitude in the gamma radiation from process solutions. Accordingly, this reduction is sufficient to conclude that the consequences are reduced to low for the facility worker and the event becomes a Scenario Class III event when processing unirradiated fuel. Therefore, no ACs are required to protect the facility worker from external radiation.

8.3.2.6.2.1 Release Pathways and Scenarios

There is a separate GVC serving each of the Hot and Warm Canyons. The principal purpose of the gang valves, most of which are remotely operated from the control room, and all of which can be manually operated, is to provide a motive force (steam) to the canyon jets to transfer process solution. The GVCs are located above the canyon air exhaust tunnels and run parallel to the Hot and Warm Canyons from Section 4 to Section 18. This discussion focuses on the HGVC because the consequences of events in the HGVC are higher than the consequences of similar events in the WGVC. If process air is not applied to air blow the steam–to–jet transfer line after a solution transfer has been completed, suckbacks of radioactive material to the gang valves are possible.

Suckbacks are caused by steam condensing in the steam–to–jet transfer lines associated with the gang valves after the transfer is completed. As the steam condenses, the partial vacuum created in the transfer line draws radioactive liquids into these lines up to the gang valve in the GVC. The usual result of a suckback is a localized, but possibly intense, radiation field in the GVC. Suckbacks can be caused by valve failures, air blow failures, or process air failures.

The H–Canyon SAR (Ref. 16) reports a nominal value of 175 R/hr at a distance of 3 inches (about 7.6 centimeters), and a maximum value of 500 R/hr at a distance of 5 inches (about 12.7 centimeters) for Mk–16B/22 spent fuel. In an effort to verify the values reported in the SAR, ESH–HPT–94–0277 (Ref. 66) reports the results of new exposure calculations performed for Mk–16B and Mk–22 fuel solutions scheduled for processing in H–Canyon. A new study, S-CLC-H-01006 (Ref. 67), completed in September 2003, revised the exposure rates associated with this event.

The results of the 1994 study (Ref. 66) are summarized as follows:

Source Term	Distance to Piping	R/hr
Nominal Head End	5 cm	255
(6.5 Year Decay)	30 cm	67
	100 cm	19
	3 m	6

The results of the 2003 study (Ref. 67) are summarized as follows:

DISTANCE FROM PIPING	Bounding Irradiated Mk–22 Fuel (Rem/Hr)	Bounding Irradiated Mk–16B Fuel (Rem/Hr)	*Bounding Unirradiated Mk–22 Fuel (Rem/Hr)
5 cm	2.24E+02	1.39E+02	6.0E-03
30 cm	5.9E+01	3.6E+01	2.0E-03

* K14.1 charge only

The exposure rates given in Reference 67 are based on nominal source terms, and are intended as guides only to give the nominal values expected if a suckback occurs. The value for the K14.1 charge (slightly irradiated) will bound unirradiated fuel. The values from References 66 and 67 given above are not bounding consequence or exposure numbers if a suckback occurs. These radiation levels may injure facility workers, particularly if direct contact (e.g., hand contact) is made with the piping containing the solution. However, this radiation level is not sufficient to cause a fatality under reasonable assumptions of exposure time. The consequences of a suckback event with irradiated fuel cooled more than 3,650 days are classified as medium to the facility worker. The consequences of a suckback event with unirradiated HEU are classified as low to the facility worker. Consequences to offsite and onsite receptors are low.

8.3.2.6.2.2 Preventive and Mitigative Features

A DiD DF that prevents the suckback event is the air blow feature of the gang valve and the fact that the gang valve will only operate in a certain sequence due to the way the cam is designed and operated. The cam will not allow the gang valve to be placed in the vent position immediately after steam is passed through the valve. After the valve is placed in the jet position, it must be placed in the air blow position before it can be placed in the vent position.

The following engineered controls to prevent suckback in the gang valves are provided as DiD controls. These controls are not credited with reducing the frequency of suckback events.

1. After the transfer has been completed, process air is used to purge the steam lines to prevent suckbacks.

2. Timing devices are in place that cause process airflow to continue for 5 minutes after a solution transfer has been completed.

3. Vacuum breaker seal pots are installed on all high activity gang valves where suckbacks are likely to occur to relieve vacuum.

An AC for irradiated fuel that prevents the event requires that process airflow be initiated and maintained for a minimum of 5 minutes after completing any steam jet solution transfer.

ACs that mitigate the suckback consequences for irradiated fuel are provided in the Radiation Control Manual, WSRC Procedure Manual 5Q (Ref. 68). When sampling or transferring material with the potential for severe exposure as a result of the suckback event (i.e., dissolved raw material, Head End, First Cycle feed and waste, and HAW evaporation and neutralization solutions), personnel entering the HGVC or the Hot Sample Aisle shall be required to either wear audible dosimetry or be accompanied by RCO personnel. Access to both the HGVC and WGVC and the Hot and Warm Sample Aisles shall be controlled at all times and limited to properly trained and qualified personnel for unrestricted access. Visitors or untrained personnel are not allowed access to the GVC unless they are with a properly trained and qualified person. This access is controlled because the GVC is a radiological area as defined in the WSRC Procedure Manual 5Q. In addition, GA–6 monitors are provided as DiD to alert personnel to changing radiation fields and mitigate consequences.

The ACs that mitigate a suckback event for irradiated fuel will reduce the consequences to the facility worker to a low consequence. Therefore, the Scenario Class of a suckback event is reduced from a Scenario Class I to a Scenario Class III event.

WSRC completed evaluations of this scenario, NMP–ENG–94–0182 (Ref. 65) and NMP–ENG–95–0008 (Ref. 69), for the F–Canyon SAR to determine if additional cost effective controls could reduce the severity of this event. The evaluation concluded that existing measures are effective in minimizing the risk to personnel from GVC exposure. No cost–effective means were identified for any further reduction of risk. This work also applies to H–Canyon.

8.3.2.6.3 INADVERTENT PERSONNEL RADIATION EXPOSURE IN GANG VALVE CORRIDOR OR SAMPLE AISLES DUE TO A LIQUID RADIOACTIVE MATERIAL RELEASE IN THE GANG VALVE CORRIDORS OR THE SAMPLE AISLES

The H–Canyon PHA (Ref. 8) (PHA Events MA–03 and MA–04) considers an inadvertent radiation exposure in the GVC or the Sample Aisles from a liquid radioactive material release in these areas to be a significant event because the facility worker may receive a significant radiological dose. The PHA determined the event to be in the Anticipated frequency category. The consequences of this event were determined to be medium for the facility worker and low to the co–located worker and offsite public. An Anticipated frequency and medium consequences make this a Scenario Class I event. When the AC (described below) is considered, the event frequency remains in the Anticipated category. The consequences are reduced to low for the facility worker and the event becomes a Scenario Class III.

Processing of unirradiated HEU has shown a reduction of about two orders of magnitude in the gamma radiation from process solutions. This radiation profile is judged sufficient to reduce the consequences to low for external exposure. However, several tanks may still contain high alpha radiation levels (e.g., Pu and Np storage or concentrated LAW). Consequences would be medium for alpha internal exposures from high alpha solutions.

8.3.2.6.3.1 Release Pathways and Scenarios

This discussion is similar to Section 8.3.2.6.2, Suckbacks in the GVC. The difference is that in Section 8.3.2.6.2, the radioactive material is contained within the gang valve piping, and radiation exposure from neutrons and/or gamma rays is the primary concern. This scenario postulates that radioactive solution leaks from the piping/valves or cooling water lines in these areas. The radioactive material source can be suckbacks into the gang valve piping, contamination in the SCW Return piping that passes through the GVC, or leaks from the Sample Aisle piping or samplers. For leaks, the primary concerns are exposure and contamination.

The event described in this section is essentially the same as the events described in the PHA for a radioactive material release in the Sample Aisles (PHA Event MA–05) and a release of contaminated cooling water in the GVC (PHA Event MA–04) and a radiological release in the GVC (PHA Event MA–03). In these events, a radioactive liquid release to the GVC or the Sample Aisle results in an inadvertent personnel radiation exposure or a radioactive material assimilation by the facility worker. The following scenario is applicable to the Sample Aisle Scenario and the controls to prevent or mitigate the event in the GVC will be applicable to the Sample Aisle event.

Leaks can be caused by mechanical failures, valve failures, pipe failures, etc. Leaks can result in the release of process solution from the canyon to the GVC. Sample Aisle leaks are from leaks in the sampler process lines, or by spilling radioactive liquid from the sampler or sample vial when sampling, or by any other leak into the Sample Aisle. Leaks of highly radioactive solution may cause injury, but not a fatality, to facility workers either by assimilation or by direct contact. Consequences to offsite and onsite receptors are not applicable. Therefore, the consequences of a leak event of irradiated HEU solution are classified as medium to the facility worker. The consequences of a leak of unirradiated HEU is low for external exposure and medium for internal exposure from high alpha solutions.

8.3.2.6.3.2 Preventive and Mitigative Features

Suckbacks are one of the initiating events for releasing radioactive liquids to the GVC. The engineered controls that prevent a suckback in the gang valves are provided as DiD controls. These controls are the same ones identified in Section 8.3.2.6.2 for preventing a suckback in that scenario. Please refer to that section for a description of the controls. An AC that prevents the event for irradiated HEU processing requires process airflow continue for a minimum of 5 minutes after completing any transfer using the gang valves.

A DiD DF that mitigates the consequences of a leak event is the GVC floor drains which lead to the Gang Valve Catch Tank, which is located in the air exhaust tunnel. This tank is designed to collect liquid from leaks or water from washdowns. If the Gang Valve catch tank should fill, it overflows to the air tunnel rather than backing up into the Gang Valve corridor.

For irradiated HEU processing, ACs that mitigate the consequences of a suckback event are provided in the Radiation Controls Manual, WSRC Procedure Manual 5Q (Ref. 68). When taking samples or transferring materials with the potential for severe exposure if a significant radiological material release occurs (i.e., dissolver solution, Head End, First Cycle feed and waste, and HAW evaporation and neutralization solutions), personnel entering the HGVC or the Hot Sample Aisle shall be required to either wear audible dosimetry or be accompanied by RCO personnel. Access to both the HGVC and WGVC and the Hot and Warm Sample Aisles shall be controlled at all times and limited to properly trained and qualified personnel for unrestricted access. Visitors or untrained personnel are not allowed access to the GVC or the Sample Aisle unless they are with a properly trained and qualified person. This access is controlled because the GVC and the Sample Aisle are radiological areas as defined in the WSRC Procedure Manual 5Q.

As stated above, processing of unirradiated HEU does not require any ACs for external exposure events. Internal exposure events resulting from tanks containing high alpha radiation levels (e.g., Pu and Np storage or concentrated LAW) remain a medium consequence. Therefore, controls commensurate with the potential hazard to facility workers from internal alpha contamination must be addressed. Considering the relatively small number of tanks that contain high alpha radiation levels, the appropriate level of control to mitigate the consequences of an exposure event is met by the air monitoring practices and the RWP based access controls as defined in the Radiation Control Program.

The Sample Box Drains, DiD features, drain directly to the canyon cell floor (sumps) and provide limited mitigation for this event. The drains allow any spilled radioactive solution to drain directly to the canyon. In addition, GA–6 monitors are provided as DiD. These monitors alert personnel to changing radiation fields and mitigate consequences. Other DiD controls that mitigate the radioactive material release consequences in these areas include the requirement to evacuate the area if the air monitors alarm, operator round sheets in which unusual events such as leaks are noted, and adherence to good Rad Con and ALARA practices. For the Sample Aisle, the controls that prevent or mitigate a puncture wound also mitigate the effects of a liquid radioactive material release. The mitigators noted reduce the event consequences from medium to low for the facility worker.

An Anticipated frequency and low consequences make this a Scenario Class III.

8.3.2.6.4 INADVERTENT PERSONNEL RADIATION EXPOSURE IN THE HOT CANYON FROM FUEL HANDLING OPERATIONS IN THE RAILROAD TUNNEL

The H–Canyon PHA (Ref. 8) (PHA Event TS–03) considers an inadvertent radiation exposure in the Railroad Tunnel Airlock to be a significant event because the facility worker will receive a significant radiological dose. There are no passive engineered features that will prevent this

event. The PHA determined the event to be in the Anticipated frequency category. The consequences of this event were determined to be high for the facility worker and low to the co–located worker and offsite public. An Anticipated frequency and high consequences make this a Scenario Class I event. When the active systems and ACs (described below) are considered, the event frequency moves to the Unlikely category. The consequences are reduced to medium for the facility worker and the event becomes a Scenario Class II.

8.3.2.6.4.1 Release Pathways and Scenarios

The postulated event occurs when the Railroad Tunnel or Hot Crane Maintenance Area Shielding Door is inadvertently opened while radioactive material is exposed in the Railroad Tunnel fuel transfer area. For this event to occur, two conditions must be met; the first is that fuel or targets with a large amount of gamma, high energy beta radiation, or a high neutron source must be outside the cask car or the Fuel Storage Area (i.e., irradiated HEU). The second condition is that personnel must be in the Railroad Tunnel Airlock or the Hot Crane Maintenance Area when the shielding door is inadvertently opened during fuel transfers. This event does not include exposure to radiation from residual contamination or specific work activities involving high radiation in these areas (e.g., cleaning up after dropping a fuel bundle, decontaminating cask car, or handling contaminated equipment in the railroad tunnel).

The initial scenario for this event included only personnel in the Railroad Tunnel or Railroad Tunnel Airlock. A WSRC review determined this scenario applied to personnel in the Hot Crane Maintenance Area also. The Hot Crane Maintenance Area Shielding Door was added as a SS system to protect workers in the Hot Crane Maintenance Area when fuel handling operations are occurring in the Fuel Receipt and Storage Area of the Railroad Tunnel.

The review indicated the potential for workers in either the Hot Canyon Shop or the Swimming Pool Decontamination Facility to be exposed to ionizing radiation from fuel transfer operations (i.e., when fuel bundles are being handled by the Hot Canyon Crane). The fuel bundles are transferred directly over these facilities and personnel in the facilities could receive an inadvertent exposure if the cell covers over the Hot Shop or Swimming Pool are off. The only personnel exposed to any radiation from the fuel handling operations are personnel who inadvertently enter either area. The intent is not to have personnel in these areas during fuel handling operations. Therefore, personnel access to these areas is controlled.

A new study was completed in September 2003 of the exposure rates associated with this event. The results of the 2003 study (Ref. 67) for hanging fuel assemblies in the Railroad Tunnel are summarized as follows:

Distance from Fuel Assembly	Bounding Irradiated Mk–22 Fuel (rem/hr)	Bounding Irradiated Mk–16B Fuel (rem/hr)
45 feet	2.3E+01	2.1E+01
90 feet	5.8E+00	5.1E+00

The exposure rates given in Reference 67 are based on nominal source terms and are intended to be guides to give the nominal values expected in the event personnel are exposed to fuel bundles in the Railroad Tunnel or the Hot Crane Maintenance Area. The numbers from Reference 67 in the table above are not bounding consequence or exposure numbers if personnel are inadvertently exposed to the fuel bundles during fuel handling activities.

These radiation levels may injure facility workers, particularly if an extended exposure to the hanging fuels assemblies occurs. However, this radiation level is not sufficient to cause a fatality under reasonable assumptions of exposure time. The consequence from an inadvertent exposure event in the railroad tunnel with these radiation levels is classified as medium to the facility worker. There are no consequences to offsite and onsite receptors.

8.3.2.6.4.2 Preventive and Mitigative Features

The SS engineered features that prevent this event are the permission switches for the Railroad Tunnel Shielding Door and the Hot Crane Maintenance Area Shielding Door**.** These are key lock switches, and control of the permission keys is maintained by the SOM in the 4th Level Canyon Control Room. To open the shielding door inadvertently, the permission switch has to be inoperative or manually overridden. Manually overriding the permission control switch requires specific actions by several personnel that would require multiple errors to inadvertently open the shielding door. Although not credited in this SAR, the independent verification of procedural activities and other improvements in the H–Canyon conduct of operations tend to reduce the frequency of inadvertently opening the shielding door. The improved conduct of operations is a DiD measure to prevent the event.

ACs that prevent the event require the Railroad Tunnel and Hot Crane Maintenance Area Shielding Door Permission Switches to be operable (i.e., activated in such a manner that the switch prevents opening the door) when fuel transfer operations are being conducted in the Railroad Tunnel. The Switches shall be tested for proper operation every 18 months. Another AC is that the SOM shall maintain positive control of the Permission Switch key. When fuel bundles are being unloaded, personnel access to the Railroad Tunnel Airlock shall be controlled. The access control program controls personnel access to H–Canyon at all times and to specific areas (e.g., Railroad Tunnel) during specific process operations. The purpose of the access control program is to prevent unauthorized personnel access to H–Canyon. The access control program also has provisions to ensure personnel with H–Canyon access do not enter specific areas of the canyon during processing activities. For example, to ensure personnel access to the Railroad Tunnel is controlled during fuel handling operations, procedures require an announcement be made over the H–Canyon Public Address system that fuel handling activities are about to occur in the Fuel Handling and Storage Areas (Railroad Tunnel) and that personnel should evacuate this area. Another example of the access control program is that operators make a visual search of the area before fuel handling activities occur. Note that these aspects of the access control program are cited as examples only since the access control program is constantly reviewed and upgraded to ensure personnel safety in H–Canyon and in the future better controls than these examples may be developed and implemented. These additional controls (permission switch and personnel access control) reduce the frequency of this event from Anticipated to Unlikely.

The access control program and the Radiation Protection Program are the only identified controls, which prevent personnel entering the Hot Canyon Shop and Swimming Pool Decon Facility when fuel transfer operations are occurring. The intent is to prevent personnel from being in these areas during fuel handling operations. Since it will take an overt act by personnel (opening the access door to the Hot Shop or Swimming Pool and entering the area) to expose anyone to ionizing radiation from the fuel handling operations, the normal facility access control program and RCO program is sufficient to prevent or mitigate the event.

A DF of the building structure (mitigator) that protects the facility worker is the physical distance from the fuel transfer operations and cask car to the Railroad Tunnel Airlock, the Hot Canyon Shop, and the Swimming Pool Decon Facility**.** The Radiation Protection Program also mitigates the event consequences by requiring personal to wear protective equipment while in these areas. When fuel bundles are being unloaded, personnel required in the Railroad Tunnel Airlock or the Hot Crane Maintenance Area shall either wear audible dosimetry or be accompanied by RCO personnel. These mitigators are sufficient to lower the consequences to the facility worker to a medium consequence. GA–6 monitors that alert facility personnel to high radiation are provided as DiD, but are not credited with reducing the consequences of this event. Immediate response to the high radiation monitors that requires evacuation of the area will further reduce the event consequences.

An Unlikely frequency and a medium consequence reduce this event from a Scenario Class I to a Scenario Class II.

8.3.2.6.5 INADVERTENT PERSONNEL RADIATION EXPOSURE IN THE CLEAN AREAS OF THE CANYON–LIQUID RADIOACTIVE MATERIAL RELEASED INSIDE THE FIRST LEVEL OR THE PERSONNEL TUNNEL

The H–Canyon PHA (Ref. 8) (PHA Event MA–06) considers an inadvertent radiation exposure in the clean areas of the canyon to be a significant event because the facility worker could receive a significant radiological dose. The passive engineered feature that prevents this event is the design and construction of the canyon building structure. The PHA determined the event to be in the Anticipated frequency category. The consequences of this event were determined to be medium for the facility worker and low for the onsite worker and offsite public. An Anticipated frequency and medium consequences make this a Scenario Class I event. When the active systems and ACs (described below) are considered, the event frequency remains in the Anticipated category. The consequences are reduced to low for the facility worker and the event becomes a Scenario Class III event.

8.3.2.6.5.1 Release Pathways and Scenarios

This scenario postulates leaks of process solutions through the building expansion joints from either the Hot or Warm Canyon to clean areas on the canyon First Level. Solutions from the Hot Canyon are of greater concern because Hot Canyon solutions are those that contain the Pu–238 and the fission products that produce a much greater dose consequence than the uranium, Pu–239 or Np–237 processed in the Warm Canyon. All the high content Pu–238 solutions have been

processed through the canyon. There is neither Pu–238 solution remaining nor any plans to process this material. The leak into the clean areas is usually caused by migration of radioactive process liquids from the canyons to the clean areas typically through the expansion joints between the canyon sections. The initiating event is a spill or other release of radioactive materials in the canyons. The spill overflows the sump in the affected cell and spreads across the cell floor until it reaches the expansion joints between the canyon sections. If the seals between the expansion joint have deteriorated or are otherwise damaged, the radioactive liquid can enter the expansion joint and migrate to the walls or floor of the Center Section of the canyon First Level. When the radioactive material reaches the clean area of the canyon, it becomes a hazard to personnel occupying these areas.

Highly radioactive solution leaks may cause injury, but are not expected to cause a fatality, to a facility worker by either radiation shine, assimilation, or direct contact. Because this release occurs inside the canyon building, consequences to offsite and onsite receptors are low. The consequences of this event to the facility worker are classified as medium.

A new study of the exposure rates associated with this event was completed in September 2003. The new exposure rates are included in Reference 67. The results of the 2003 study (Ref. 67) are summarized as follows:

Distance from spill	Bounding Irradiated Mk–22 Fuel (rem/hr)	Bounding Irradiated Mk–16B Fuel (rem/hr)
5 cm	2.41E+02	1.49E+02
30 cm	2.3E+01	1.4E+01

The exposure rates given in Reference 67 are based on nominal source terms, and are intended to be guides to give the nominal values expected if a radioactive solution is leaked to the occupied areas of the canyon. The numbers from Reference 67 in the table above are not bounding consequence or exposure numbers for an inadvertent exposure to ionizing radiation in the occupied areas of the canyon. These radiation levels may injure facility workers, particularly if an extended exposure to the spilled radioactive liquid occurs. However, this radiation level is not sufficient to cause a fatality under reasonable assumptions of exposure time. The consequence from an inadvertent exposure event in the clean areas with these radiation levels is classified as low to the facility worker. There are no consequences to offsite and onsite receptors.

8.3.2.6.5.2 Preventive and Mitigative Features

An engineered DiD control that prevents this event is the sump level detectors in the Hot Canyon Sumps and the Warm Canyon Sumps. The DiD AC that prevents this event is the sump level increase response procedure for releases inside the canyon. This AC (response to indication of high liquid levels in the sumps) prevents the event by limiting the amount of radioactive material released to the sump. If the material cannot overflow the sump to reach the expansion joint

between the canyon sections, it cannot leak into the clean areas of the canyon central section. The sump liquid level instruments, alarms, and required operator response actions to an increased sump liquid level are not sufficient to reduce the event frequency to the Unlikely frequency category.

ACs are effective in mitigating the event consequences. These ACs include the Emergency Response Program and Rad Con Program. Leaks discovered in the clean areas are cleaned up per the Emergency Response Program spill response procedures. The following controls are examples of how the Rad Con program is currently applied. Procedures that mitigate the accident consequences include those that limit access to the area where the spill or release occurred, requires protective clothing or equipment, and specifies actions to take to clean up the spill promptly. Routine Rad Con surveys of the First Level, air monitors, and requirements to evacuate the area if radiation levels exceed certain limits are additional DiD measures to mitigate the event consequences. The Rad Con Program and spill response procedure reduce the consequences of this event to the facility worker to low.

The combination of an Anticipated frequency and low consequences reduces the event from a Scenario Class I event to a Scenario Class III event.

8.3.2.6.6 INADVERTENT PERSONNEL RADIATION EXPOSURE IN OLD HB–LINE

This entire section has been deleted from the H–Canyon SAR and is now addressed in the HB–Line SAR.

8.3.2.7 External Impact Events

The H–Canyon PHA (Ref. 8) (PHA Events AR–08, BC–07, and TR–4) considers an external impact or tanker truck explosion in the canyon/adjacent area (i.e., sample returns tanker truck explodes on its way to or in the Warm Canyon Truckwell Airlock) or OF–H to be a significant event because the facility worker and the co–located worker could receive a significant injury from the explosion, radiological dose, and/or exposure to hazardous chemicals. No external impact events exceeded the EGs for the HEU Blend Down (PHA Appendix H). For OF–H there are no passive engineered features that will prevent this event; for H-Canyon the structure will prevent an impact on process equipment from sources outside the canyon walls. The original PHA determined the events (AR–08 and BC–07) to be in the Extremely Unlikely frequency category for aircraft impacts and the latest PHA revision determined an Unlikely frequency for the sample return tanker truck explosion event (TR–04). The H–Canyon consequences for the impact event were determined to be high for the facility worker and the co–located worker and low to the offsite public. An Extremely Unlikely frequency and high consequences for the aircraft impact make this a Scenario Class II event. When the active systems and ACs (described below) are considered, the event frequency remains Extremely Unlikely. The consequences are reduced to medium for the facility worker, and the event becomes a Scenario Class III event. The H–Canyon tanker truck explosion event consequences were determined to be high to the facility worker, moderate to the co–located worker, and negligible to the offsite public. An Unlikely frequency and high consequences make this a Scenario Class I event. When the passive

DF and mitigative ACs (described below) are considered, the event frequency decreases to Extremely Unlikely and the consequences are reduced to moderate for the facility worker, while the co–located worker consequences are low. The event becomes a Scenario Class III event.

The HEU Project PHA identifies several external impact events. Among them are a train derailment, vehicle crash, or vehicle crash with subsequent fire events. PHA events FO–13, NU–4, and FO–12a, are typical of these external impact events. These events are from operator error (includes errors associated with fuel which causes an impact release) or mechanical failures, which cause a collision with, and damage to, transfer or hold tanks, tank trailers, or shipping containers. The combination of an Extremely Unlikely frequency and medium consequences makes these events a Scenario Class III. The HEU Project PHA helicopter impact events (FO–16, LS–18, NU–17, and ST–11) due to pilot error or mechanical failure, with an Extremely Unlikely frequency combined with medium consequences are Scenario Class III events. The HEU PHA aircraft impact events (LS–17, NU–16, and ST–10) due to aircraft mishap, pilot error, or mechanical failure are BEU for frequency with no Scenario Class listed. The chemical consequences to the facility worker are medium with all other consequences low to the receptor groups. If the events are determined to be Scenario Class III, IV, or BEU events, these events do not require either SC or SS controls to protect any receptor. Other than the accident frequency and consequence analyses discussed below and in Addendum 2, these events are not considered further in this SAR. The frequency and consequence analyses were completed to show the total risk associated with this generic accident family.

8.3.2.7.1 RELEASE PATHWAYS AND SCENARIOS

Most accident events result from failures within the system. It is possible to damage a system as the result of some occurrence in an adjacent system. External explosion or impact events evaluated in the PHAs include, but are not limited to, dropped cell covers, impacts from railroad cask cars, impacts from vehicles or cranes, train derailments, and impacts from helicopters or other aircraft. These impacts may breach the primary confinement of the process tanks or piping and result in a liquid release of radioactive liquids or hazardous chemicals. The explosion scenario may be caused by leaking truck fuel being ignited from lightning or vehicle impact with release of sample returns.

8.3.2.7.2 PREVENTIVE AND MITIGATIVE FEATURES

Dropped cell covers and impacts from railroad cask cars occur within the confines of the canyon building. These events are documented in the 200 Area Fault Tree Data Bank and the frequency is classified as Anticipated. These events do not result in significant consequences to the offsite or onsite receptors or the facility worker so the consequences are classified as low. The combination of an Anticipated frequency and low consequences results in a Scenario Class of III. These impact events are not considered further.

There are no passive engineered features that prevent the occurrence of an impact event. The passive engineered feature that mitigates impact or explosion events for H–Canyon is the building structure. The building is a Class I explosion proof Maximum Resistance Construction

structure designed to withstand pressures of 1,000 lb/ft^2. The building is constructed of reinforced concrete walls. The outside walls of the radioactive reprocessing cells are 48 inches thick for the most highly radioactive process, and 34 inches thick for the process involving the lesser radioactive process. The roofs over the two process areas are 42 inches and 30 inches thick, respectively. An AC that also mitigates the consequences of an impact event is the Structural Integrity Program. It is concluded that impact from vehicles, helicopters, and small aircraft will have no significant effect on the canyon structure.

The (non–credited) passive engineered feature that prevents the tanker truck explosion from releasing the sample returns is the tanker design. These trailers (i.e., LR–56 or HAWTT) are not subject to most of the Normal Conditions of Transport package performance requirements because they are not subject to conditions, which would give rise to these hazards. In particular, they are not subject to dropping as addressed by the usual conditions of transport drop requirements, because they are not unloaded from the trailer. The trailers do not have to withstand the water spray test, because it is a metal structure, not subject to having its strength reduced as a result of becoming wet. They do not have to withstand compression because they are not subject to stacking. Internal heat generation associated with radioactive decay is a fraction of a watt making the effect of heat generation negligible. A release of radioactive inventory sufficient to give an offsite receptor a 0.5 rem dose during routine conditions of transport is not credible, given the radiological controls in place. The shielding at a minimum is less than 1% of the 10 CFR 71.47 radiation limits and the contents are fissile exempt (Ref. 121, 122).

This robust design of either trailer combined with the (non–credited) Transportation Program prevent impacts to or by the trailers by using escorts that create moving traffic barriers, controlling the speed and routes during movement, and following detailed requirements for traversing sections of the routes which pose increased hazards. In addition, the (non–credited) Transportation Program prevents occurrence of the event by ensuring the tanker truck is structurally sound and operated in accordance with site policy.

The H-Canyon Building structure mitigates the explosion if it occurs in the airlock, but is also not credited. Two SS ACs that mitigate the consequences of a tanker truck explosion event are the emergency response (including both fire and spill response procedures) and radiation protection programs. Another non–credited, mitigative AC is the IH program addressing the identification, evaluation, and control of these hazards; this program is implemented as a facility control. A combination of an Extremely Unlikely frequency category and moderate consequences reduces the event from a Scenario Class II to a Scenario Class III.

The frequency of an impact event was classified as Anticipated (vehicle) to Unlikely (crane mishap) to Extremely Unlikely or BEU (helicopter or small aircraft) based on engineering judgment. The H–Canyon PHA consequences of an impact by a vehicle, helicopter, or small aircraft were classified as low to the offsite and onsite receptors and the facility worker based on the design and construction of the canyon building. The combination of an Anticipated event with a low consequence results in a Scenario Class of III. These impact events are not considered further.

A large aircraft crash could significantly impact the canyon. A study of the probability of aircraft crashes into an SRS reactor building was made and is applied to the Canyon and Outside Facilities (Ref. 16). The results of the original study have been modified to account for the removal of the restrictions on air traffic over SRS. The Canyon and Outside Facilities are located sufficiently far away from airports to conclude that the probability of an aircraft crash on the facilities is only slightly influenced by airport activity, and is more directly related to enroute operations. Studies related to power reactors, based on U.S. Civil Aviation data, indicate that, beyond 5 miles distance from an airport runway, the expected frequency of an aircraft crash approached an essentially constant value ($3x10^{-9}$/flight–mi^2 for commercial and $7x10^{-9}$/flight–mi^2 for general aviation flights). If these expected frequencies are assigned to the flights that are estimated to occur within the SRS airspace (4,000/yr), the expected frequency of an aircraft crash anywhere within the site boundaries is $3x10^{-5}$/yr–mi^2. Assuming that the Canyon and the Outside Facilities each present a "target" area of 0.004 mi^2, the expected frequency of an aircraft crash onto either facility is about $1.8x10^{-11}$/hr (8.76E–8/yr). This frequency, less than one in one million years, is BEU. Therefore, a large aircraft impact event is not considered further.

The Outside Facilities are more vulnerable to impact events than the Canyon building. For example, tanks are subject to vehicle impact; overhead piping is subject to impact from tall loads and from crane booms or mishaps; and derailment of a rail car delivering bulk chemicals could impact the Chemical Storage area, for example. In general, the chemical storage tanks were not designed or constructed to withstand an impact type event.

The passive engineered feature that prevents vehicle impact events from rupturing the tanks are the OF–H curbs/dikes/basins that surround the radiological/chemical tanks of concern in OF–H. These non–credited barriers (only the 600 Basin and Cold Chemical Storage Area Basins are credited) prevent a direct vehicle impact into the tanks that would result in a large, instantaneous release of process solutions. Instead, this event postulates a release due to shearing of process piping or puncture of a tank by the vehicle. There are no passive engineered features that prevent a crane, helicopter, or aircraft impact events. As previously stated, the frequency of an impact event was classified as Anticipated (vehicle) to Unlikely (crane) to Extremely Unlikely (helicopter and small aircraft) based on engineering judgment. The vehicle impact event consequences were classified as low to offsite, onsite receptors, and to the facility worker. The consequences to the facility worker were judged to be low because the postulated scenario of a vehicle impact event would allow the facility worker time to evacuate the area and thus minimize exposure. The H–Canyon consequences of a helicopter or small aircraft impact event were classified as low to offsite receptors and as high to onsite receptors and the facility worker. For H–Canyon, the Anticipated frequency and low consequence combination results in a Scenario Class of III for vehicle impacts in the Outside Facilities. The combination of an Extremely Unlikely frequency and a high consequences to onsite receptors and the facility worker results in a Scenario Class of II for helicopter and small aircraft impacts in OF–H.

DiD ACs that can prevent vehicle impact events are adherence to standard driver safety rules. Engineered controls that mitigate the consequences of a vehicle impact event are the 600 Basin (ARU) and the Cold Chemical Storage Area Basins in OF–H. ACs that mitigate the consequences of a vehicle impact event are the emergency response program and spill response

procedures that require area evacuation and actions to limit the size of the spill. The vehicle impact consequences are low to all receptors.

Engineered controls that mitigate the consequences of an aircraft impact event are containment curbs/dikes/basins around the OF–H tanks. The 600 Basins and Cold Chemical Storage Area Basins are the only credited controls. ACs that mitigate the consequences of an aircraft impact event are the emergency response program and spill response procedures.

These ACs reduce the consequences of an aircraft or other external impact on OF–H tanks to medium for the facility worker and low for the co–located worker. A combination of an Extremely Unlikely frequency category and medium consequences reduces the event from a Scenario Class II to a Scenario Class III.

Subsequent to the qualitative analysis provided above, additional quantitative analysis (Ref. 127) was conducted in 2002 to determine the frequencies of aircraft impact for selected SRS facilities in accordance with DOE-STD-3014-96 (Ref. 128). Bounding aircraft impact frequencies were calculated for selected SRS facilities, including H-Canyon and OF-H. The results are summarized in Reference 127.

The consequence analyses provided in the PHA discussed above are still valid and meet the intent of the guidance provided in DOE-STD-3014-96. The frequencies for most impacts are BEU (i.e., less than 1.00E-06). The remaining impacts are a combination of an Extremely Unlikely frequency category and medium to low consequences which reduces the impact events from a Scenario Class II to a Scenario Class III.

8.3.2.8 Natural Phenomena

8.3.2.8.1 EARTHQUAKE

The H–Canyon PHA (Ref. 8) (PHA Events HC–11 and HC–12) considers an earthquake affecting the canyon or OF–H to be a significant event because the facility worker, the co–located worker, and the offsite public could receive a significant radiological dose or exposure to hazardous chemicals. There are no passive engineered features that will prevent this event. The H–Canyon building structure and the EUS storage tank in OF–H are passive engineered features that mitigate the consequences of an earthquake. The PHAs determined the events are in the Unlikely frequency range. The H–Canyon event consequences were determined to be high for all receptors. An Unlikely frequency and high consequences make this a Scenario Class I event. When the active systems and ACs (described below) are considered, the event frequency remains in the Unlikely category. The consequences are reduced to medium, and the event becomes a Scenario Class II for H–Canyon. The PHA Appendix H events (LS–21, NU–20, and ST–14) were determined to be low (Scenario Class III) for all receptors and are not discussed further. The other remaining PHA (Appendix H) earthquake events (Bundle Off–Loading Station [RA–24] and Outside Facilities, Storage and Blend Tanks [FO–17]) are covered by an existing H–Canyon PHA event.

8.3.2.8.1.1 Release Pathways and Scenarios

A DBE is assumed to occur during processing operations in which canyon and OF–H processes are operating at the same time (except for second product cycle and FWR). Note, for conservatism it is assumed that all are operating simultaneously. The DBE applicable to H–Canyon per the latest DOE guidance is a PC–3 event, as defined in WSRC–TM–95–1 (Ref. 70). The scenario assumes that a process line connected to the largest tank in the individual process is broken and the entire tank contents are released to the canyon floor. For OF–H, the largest tank in each OF–H process is assumed to rupture, releasing the contents to the OF–H curbs and dikes. The largest vessel in the process is filled to maximum capacity with a solution assumed to be at the maximum concentration allowed by ACs (e.g., for the canyon processes the maximum concentration allowed by criticality controls). The canyon process vessels are expected to remain upright and intact based on the results of previous seismic studies. With the appropriate process, i.e., non–DSA level, liquid level controls, the EUS Tank is qualified to PC–3 NPH conditions as documented in "PC–3 Qualification of Uranyl Nitrate Storage Tank (U)" (Ref. 71).

The scenario assumes that the canyon exhaust system is inoperable for a maximum of 48 hours, primarily due to stack liner collapse. The canyon structure, the exhaust system including the SC Canyon Exhaust Fans (including Fan Damper Air System), the 292–H Fan House, the Exhaust Tunnel, the 254–19H DGs (SC systems), and the stack (SS system) are assumed to remain essentially intact after the earthquake. The stack will withstand the PC-3 seismic loads but the brick stack liner will collapse and partially or completely block airflow through the stack (Ref. 147). The canyon building remains intact with minor cracks in the walls. The exhaust duct from 299-H breaches at the point it enters the exhaust tunnel and the old HB-Line ventilation exhaust duct breaches as it enters 292-H. The 254–19H SC Diesel Generators will provide power for the exhaust system after an earthquake. Note that after a DBE, the safety analysis assumes that any one of the four fans can be returned to operation within 48 hours, thereby pulling a minimum vacuum on the canyon.

Calculation F-CLC-H-00128 (Ref. 135) determined that a seismically induced fire in 292-H/292-2H sufficient to jeopardize canyon exhaust for operation is BEU.

Calculation T-CLC-H-00792 (Ref. 136) determined that utility poles near 254-19H would withstand a PC-3 earthquake and not jeopardize DG operation. Calculation F-CLC-H-00127 (Ref. 134) determined that a seismically induced fire sufficient to jeopardize DG operation is BEU.

The released liquids evaporate creating airborne radionuclide particulates. Since the canyon exhaust is inoperable, the canyon pressure will go static or slightly positive with respect to the outside atmospheric pressure.

A structural analysis T–CLC–G–00071 (Ref. 73), concluded the canyon expansion joints would fail (crack) at only three locations in H–Canyon during a DBE. These cracks occur at the joints between Sections 1 and 2, Sections 4 and 5, and Sections 17 and 18 on the exterior walls of both the Hot and Warm Canyons. The analysis concluded that "a reasonable upper limit width of each through wall crack would be 0.10 inches" and that each crack is postulated to extend from the top of the GVC to the roof for an approximate crack length of 44 feet. The structural analysis

further concluded that "it is reasonable to assume that the distress in the pre–molded filler would not result in any significant through joint flow paths in the saw tooth joints." The previous analysis assumed that the expansion joint cracks were the only leak path.

In response to a Potential Inadequacy in the Safety Analysis (PISA) (Ref. 148), three USQEs were developed to address multiple issues in the PISA. Only one of the USQEs became a Discovery USQ (Ref. 149). The Discovery USQ, USQ-HCA-2006-00119 evaluated the basis for the release of radioactive material with all canyon exhaust fans inoperable for a period of 48 hours after a DBE. The Discovery USQ discussed the recent computer modeling of the canyon ventilation system that identified additional leak paths through the canyon ventilation air supply inlet, a breach of the 299-H duct as it enters the canyon exhaust tunnel, and a breach in the old HB-Line ventilation duct as it enters 292-H. These leak paths were in addition to the earthquake induced cracks in the canyon walls. These additional release pathways increased the areas available for release from 2 square feet (expansion joint cracks) to 130 square feet representing a 65 times increase in areas subject to an unfiltered release. An increase of 65 times for the areas subject to an unfiltered release demonstrates that a penetration factor (or leak path factor) of 1.0 be used in the consequence assessment.

The previous earthquake analysis (Ref. 150) assumes that the second product Cycle and FWR are operational. However, these operations are currently not authorized by the H-Canyon safety basis documents. Based on the results of PISA PI-06-04 (Ref. 149), calculation S-CLC-H-01085 (Ref. 151) evaluated the consequences to the MOI and OEP by increasing the penetration factor (leak path factor) from 0.1 to 1.0, reducing the airborne release rate (ARR) from 4.0E-07 to 4.0E-08, and assuming that the second product cycle and FWR are not used. The results show that the consequences are 21.9 rem to the OEP and 0.459 rem to the MOI. These consequences represent an increase to the MOI by a factor of 2.6 and an increase to the OEP by a factor of 1.8 over that previously analyzed in Reference 151. The consequences reported in Reference 152 are still well below the SRS evaluation guidelines of 100 rem for the OEP and 25 rem for the MOI.

For OF–H, the tank contents are assumed to be released to the concrete pads and dikes surrounding OF–H tanks and processes. Some of the material (i.e., 50%) escapes to storm drains in the area by overflowing the curbs/dikes and is released as a liquid release to Four Mile Creek and the Savannah River. The remaining material is contained within the curbs/dikes, where a portion of it evaporates creating an airborne particulate release. It is assumed that structural cracks will occur after the DBE and allow some leakage (included in the 50% liquid material release) through a tortuous path before the 48 hour cleanup period.

WSRC completed an analysis, T–CLC–F–00072 (Ref. 74), of the canyon structure and its ability to withstand a DBE level earthquake. The structural analysis concluded that H–Canyon will withstand the postulated PC–3 seismic ground motion. The analysis also concluded the onset of cyclic structural degradation of the building that can lead to building failure is associated with a seismic ground motion having an annual probability of exceedance of 1.8E–4, or a return period of 5,555 years. The results of the structural analysis were evaluated in a USQE (Ref. 75). The USQE concluded that an USQ does not exist for H–Canyon since the damage estimated in the structural analysis is equal to or less than the damage from a DBE estimated in the H–Canyon SAR (Ref. 16) or Addendum 1 to this SAR.

An analysis of the potential effects of a 0.04g horizontal ground motion earthquake on the stack liner has been completed. The frequency for a 0.04g earthquake is one event every 50 years at SRS. The stack liner is assumed to collapse in the 0.04g earthquake. The collapse of the stack liner will not affect the concrete stack. For conservatism the brick liner collapse is assumed to block the exhaust air flow in the stack. To compensate for the loss of airflow through the stack, earthquake response procedures have been developed to remove the access doors from each fan resulting in a ground level, filtered release. The consequences of all potential earthquakes between the 0.04g (once per 50 year event) to the PC–3 event (once per 2,000 years) are bounded by the consequences for these two events.

8.3.2.8.1.2 Preventive and Mitigative Features

The following subsections evaluate the frequency and consequences of five earthquake–induced events: release of process solutions, solvent fire, anion resin fire, nuclear criticality, and hydrogen deflagration. These sections provide details beyond those in the generic scenario description above. The sections provide specific features to mitigate the event consequences.

There are no SC or SS passive engineered features that prevent a DBE. SC DFs that prevent a liquid release from the process tanks during an earthquake and mitigate the event consequences are the DFs of the canyon vessels, which prevent their overturning or rupturing during an earthquake. The passive engineered features that mitigate the DBE consequences are described in the respective subsections. The PHA established potential high consequences to onsite, offsite and facility worker receptors. The frequency and a more accurate consequence are also described in each subsection.

8.3.2.8.1.3 Earthquake Induced Release of Process Solution

Seismic analysis for the canyon vessels indicates that instability–type overturning will not occur, but some line breaks may occur, resulting in a loss of process solution from primary containment. Therefore, the release sequence evaluated in Addendum 1 to this SAR is an earthquake occurring while a transfer in six separate unit operations are in progress, rupture or breakage of the transfer lines, loss of the radioactive solution from the transfer lines to the canyon cell floor, and escape of air borne contamination through cracks in the building structure and other leak paths in the event of ventilation loss. The amount of process solution released is assumed to be the contents of the largest tank in each unit operation. This release sequence results in an airborne release at ground level; no credit is taken for the canyon exhaust system. Therefore, rather than the filter penetration factor of 4.9E–03, a penetration factor (leak path factor) of 1.0 is assumed for escape through the building cracks, the canyon air supply inlet, a breach in the 299-H exhaust duct as it enters the canyon exhaust tunnel, and a breach in the old HB-Line exhaust duct as it enters 292-H.

Passive engineered features that mitigate the consequences of a DBE–induced release of process solutions are the canyon building structure and process vessels. The ACs that mitigate this event are the Emergency Response Program (spill response procedures) and the Structural Integrity

Program. Based on these mitigators, the consequences are classified as medium to offsite and onsite receptors and facility workers.

In general, tanks in the Outside Facilities are not designed to withstand a DBE. The exception is the EUS Tank, with the proper process (non–DSA level) liquid level controls containing UN solution. Therefore, it is assumed that for a DBE (and Design Basis Tornado [DBT]) the following vessels/tanks (i.e., up to 18 Hanford Containers or their equivalent in HM–Trailers (or similar containers such as Consani Containers), all A–Line Tanks including the new HEU Blend Down Project Tanks and the NU trailer), at a realistic maximum concentration, are released. The passive engineered features that mitigate the consequences of a DBE induced process solution release are the curbs and dikes around the ARU and Cold Chemical Storage Areas. Structural cracks in the curbs and dikes are assumed to occur after the DBE and allow some leakage through a tortuous path. The ACs that mitigate this event are the Emergency Response Program (spill response procedures) and the Structural Integrity Program. The consequences are classified as medium to the onsite, offsite, and facility worker receptors.

8.3.2.8.1.4 Earthquake Induced Solvent Fire

During a DBE, it is assumed that process solution from the largest solvent extraction tank is released via transfer lines to the canyon cells. Ignition of the process solution requires both heating the process solution above its flashpoint and an ignition source (see S–CLC–H–00273 [Ref. 76] and SAR Section 8.3.2.3.3). The spilled process solution is a mixture of aqueous solution and organic solvent. Normal operating temperature for this process solution is about 50° C. The n–paraffin organic diluent flash point specified in the purchase specifications is a minimum of 90° C. Such a mixture of aqueous and organic would require more heat and higher temperatures to ignite. Additionally, the release of the warm process solution to the cooler canyon cell floors would cool the process solution.

The only identified energy source capable of heating and igniting the process solution is canyon electrical power. The canyon electrical power supplies are not designed to withstand a DBE. As a result, it is likely electrical power will be lost. However, even if the electrical power is still available, failed electrical connections have to reach the pool of spilled process solution in the canyon cells to start a fire. The longest rigid power jumper in H–Canyon is 19 feet, 10 inches long, and the longest flexible electrical jumper is 20 feet long. The distance from the electrical wall nozzle to the canyon cell floor is 22 feet 6 inches. Therefore, any electrical jumper still energized and stretched to its maximum length, would still be over 2 feet away from the canyon floor. Spillover to adjacent cells occurs at a depth of about 1 foot 6 inches, so the electrical jumpers will never be able to contact the process solution. The canyon steam supplies are not designed to withstand a DBE. As a result, it is likely the south steam station will be lost, and in the event the station is not destroyed, the steam is not sufficient to heat the solvent to ignition. Based on the previous qualitative discussion, it is concluded that an earthquake induced solvent fire is a BEU event.

A solvent fire in the Outside Facilities also requires both heating of the solvent and an ignition source. The solvent in the Segregated Solvent tanks has an average temperature of about 30° C. A high–energy heat/ignition source such as a vehicle impact with fire is necessary to start the

solvent burning. A DBE with an accompanying high–energy heat/ignition source is Extremely Unlikely. The consequences of an earthquake induced fire in OF–H are classified as low to the offsite receptor, and medium to the onsite receptor and facility worker because of the quantity of solvent available to burn and the activity in the solvent.

8.3.2.8.1.5 Earthquake Induced Resin Fire

Since FWR operations are not authorized, the following information is provided for information only. During a DBE, the FWR RC–16 resin column is susceptible to a loss of cooling capacity. If a DBE occurs that results in the loss of coolant flow when the column is loaded with Pu–238, the solution covering the resin will begin to boil off. Unless cooling flow can be restored to the column, at some point, the column will boil dry, and the resin will ignite and burn. A detailed discussion of this scenario, the engineered features and ACs, and the Scenario Class is provided in Section 8.3.2.3.2, Earthquake Induced Resin Fire or Explosion.

This event is not applicable to Outside Facilities.

8.3.2.8.1.6 Earthquake Induced Nuclear Criticality

The irradiated fuel storage racks (SS DF item) in the bundle storage area, which are seismically qualified (Ref. 51), will prevent fuel bundles from falling and forming a critical mass during or immediately after an earthquake.

ACs that prevent an inadvertent nuclear criticality during and after a DBE are the Emergency Response Program and the emergency shutdown procedure. Loss of process solutions to the canyon floor from process line breaks after a DBE would not immediately lead to a concentration that would exceed the CSL concentrations for fissile material. On the contrary, because higher concentration process solutions would be combined with lower concentration process solutions, the potential of a nuclear criticality would be reduced.

In addition, adherence to emergency shutdown procedures would place all operations into a safe shutdown condition. Evaporation of process solutions would occur over an extended period and could lead to overconcentration in the sump and eventually to a nuclear criticality. However, because facility personnel have days to prevent/mitigate concentration of process solutions, the frequency of this event is Extremely Unlikely. The consequences of an earthquake induced criticality are low because there will be time to evacuate personnel or take other actions to prevent the criticality. This discussion is also appropriate to uranyl nitrate solutions in the Outside Facilities.

8.3.2.8.1.7 Earthquake Induced Hydrogen Deflagrations

The PVV system is assumed to fail during the DBE. Therefore, hydrogen will initially accumulate inside process vessels. If operating, some FWR process vessels will generate sufficient hydrogen to exceed the LFL within a few hours, but the other process vessels require days or weeks to generate sufficient hydrogen to reach the LFL (Ref. 36). See Section 8.3.2.2.3

for additional information on the engineered and ACs that prevent or mitigate a hydrogen deflagration. The engineered features and ACs that prevent a hydrogen deflagration during normal process operations will also prevent or mitigate the event after an earthquake. The passive, engineered feature that prevents a hydrogen deflagration is the process vessel and electrical system design that eliminates spark/ignition sources inside the tanks (i.e., motors and electrical connections are located outside the tank). The remaining potential ignition source is static electricity. The conditional probability of static electricity is estimated in WSRC–TM–90–13 (Ref. 77) to be 6.4 E–04. The earthquake frequency and the conditional probability of a spark/ignition source result in an earthquake induced hydrogen deflagration frequency of 1.3 E–07 per year (a BEU event).

8.3.2.8.1.8 Earthquake – Induced Uncontrolled Reactions on Third Level

In general, equipment located on the canyon Third Level is not seismically qualified to withstand a DBE. The exception is Head Tank 18A and associated piping that prevent the Earthquake Induced Resin Fire or Explosion in FWR described in Section 8.3.2.3.2. Therefore, it is assumed that all the chemical head tanks are destroyed and their contents, at a realistic maximum concentration, are released. Consequences to offsite and onsite receptors are classified as low and the facility worker consequences are classified as medium (serious injury, but no fatality).

Generally, the mitigative features noted in the scenarios noted above combined with the DFs of the building, vessels, and the jumpers will reduce the consequences of an earthquake to the medium classification.

An Unlikely frequency and medium consequences reduce the event from a Scenario Class I event to a Scenario Class II event.

8.3.2.8.2 TORNADO/HIGH WIND LOADING

The H–Canyon PHA (Ref. 8) (PHA Event HC–12) considers straight winds or a tornado which affects OF–H to be a significant event because the facility worker and the onsite worker could receive a significant radiological dose or exposure to hazardous chemicals. The passive engineered feature that mitigates this event is the design and double walled construction of the EUS Tank. The PHA determined the event to be in the Unlikely frequency category. The consequences of this event were determined to be high for the facility worker and the co–located worker. An Unlikely frequency and high consequences make this a Scenario Class I event. There are no engineered features or ACs to prevent this event. Therefore, the event frequency remains in the Unlikely category. ACs reduce the event consequences to medium, therefore the event becomes a Scenario Class II.

All PHA Appendix H events (LS–19, LS–20, NU–18, NU–19, ST–12 and ST–13) were low consequence and either Scenario Class III or IV and will not be discussed further in this section. Two remaining events (RA–23 and FO–18) were addressed in the H–Canyon PHA. Addendum 2 contains the frequency and consequences for a DBT that causes a radiological material release in OF–H. No additional controls are required to prevent or mitigate this event.

During an Operation Assessment of the H-Canyon ventilation system, the potential for the 291-H stack failing during high winds or tornados was questioned. Structural evaluations in calculations T-CLC-H-00130, Revision 0 and T-CLC-H-00312, Revision 2 indicated that the 291-H concrete stack may fail in PC-3 level high winds or tornadoes. If the stack failed in high winds, it has the potential for falling on the 292-H Fan House resulting in a loss of the Canyon exhaust fans. USQ-HCA-2006-00701 (Ref. 144) evaluated failure of the 291-H stack under both high wind and tornado conditions. The USQ concluded that there are no credible high wind or tornado events by which a stack failure would cause a total loss of the H-Canyon Ventilation System or result in an increase in consequences from accidents within the canyon.

8.3.2.8.2.1 Release Pathways and Scenarios

The two types of winds considered are straight winds, including hurricanes, and whirling type winds normally associated with tornadoes. Straight winds in the range of 100 – 180 mph are considered credible at SRS. Straight winds in excess of 180 mph are BEU and are not considered further.

Tornadoes are the bounding wind accidents for SRS. The DBT is defined as a tornado having a rotational speed of about 178 mph for three seconds (Ref. 70). Most damage caused by winds occurs as the result of wind generated missiles. Therefore, for accident evaluations, straight winds are considered equivalent to tornado winds. The missile is postulated to hit one of the vessels or process piping, thereby rupturing the piping or the vessel and releasing the vessel contents to the environment.

High winds or tornado events causing failure of the 291-H stack would not simultaneously cause accidents inside the canyon nor would there be credible accident scenarios whereby events inside the canyon would occur immediately after collapse of the stack. Since a high wind or tornado does not cause a release inside the canyon, the stack is not required to mitigate a potential release following collapse.

8.3.2.8.2.2 Preventive and Mitigative Features H–Canyon Building

There are no passive engineered features that prevent the occurrence of a tornado. The passive engineered feature that mitigates the impact of a tornado is the SC building structure. The building is a Class I explosion proof Maximum Resistance Construction structure designed to withstand pressures of 1,000 lb/ft^2. The H–Canyon structure was designed to withstand a DBT. The adequacy of the building to resist the DBT was verified by the EDAC analysis (Ref. 78). An AC that mitigates the consequences of a tornado event is the Structural Integrity Program.

Uncontained equipment such as ventilation ducts, electrical services, and exposed pipelines are vulnerable to missiles; however, no release of activity in liquid or finely divided solid form is expected due to this event.

Calculation T-CLC-H-00312 (Ref. 145) has shown that in winds stronger than PC-2 but less than PC-3 levels, the concrete 291-H stack will fail at about the 68-foot level. If the stack fails at the

68-foot level, it will not hit any part of the H-Canyon Ventilation System such that it will cause a complete loss of the ventilation system. Calculation T-CLC-H-00799 (Ref. 146) determined that the stack falling from the 68-foot height will collapse part of the 292-H roof, but will not affect the ventilation fans, the air tunnels under 292-H, the 292-2H fan house, or the 294-H sand filter. Also, with the failure point at the 68-foot level, the falling stack will not hit the EUS tank since the tank is outside the fall radius of the stack. If there is rubble (e.g., failed stack liner) inside the failed stack following collapse, rubble can be cleared or duct access doors can be opened inside 292-H to establish ventilation discharge at ground level.

Calculation T-CLC-H-00792 (Ref. 136) determined that utility poles near 254-19H would not withstand a PC-3 tornado. Calculation S-CLC-H-01071 (Ref. 137) determined that it is BEU that a utility pole falling due to a tornado/high wind would jeopardize DG operation.

The frequency of a DBT is classified as Extremely Unlikely. The consequences of a DBT are classified as low. The combination of an Extremely Unlikely frequency and a low consequence results in a Scenario Class of III for H–Canyon.

8.3.2.8.2.3 Preventive and Mitigative Features H–Area Outside Facility

In general, process vessels in the Outside Facilities are not designed and constructed to withstand design basis wind events. An exception is the EUS Tank. One of the primary processes in Outside Facilities is the transfer of UN product solution from the canyon to the UN storage facility. The largest of the seven tanks is the 163,195–gallon, double–walled, stainless steel EUS Tank. This tank provides interim storage for the liquid UN product from H–Canyon until the UN is processed for offsite shipment or final onsite disposition. The design and construction of this tank are in compliance with the General Design Criteria contained in DOE Order 6430.1A (Ref. 79). Tornado wind loads were addressed in this evaluation and are documented in WSRC–TR–92–251 (Ref. 80). This tank was not considered further in this evaluation.

The other process tanks in OF–H are not designed to withstand the effects of a tornado or extremely strong straight winds. Therefore, the analysis in the SAR Addendum assumes that the largest tank in each unit operation fails during a high wind event. This is considered a sufficiently bounding assumption without the requirement to complete a high wind hazards analysis.

A detailed analysis of the structural damage of the OF–H systems from high winds has not been completed. Review of information in the 200 Area Fault Tree Data Bank indicates that the threshold for reportable damage is a wind speed of about 50 mph. For this evaluation, it was assumed that significant damage (breach of tank containment) will not occur until 100 mph. At this speed, the wind will generate missiles that will strike and puncture unprotected tanks and cause a loss of confinement (Ref. 77). The evaluation assumed that at 100 mph the contents of the largest tank in each unit operation would be lost during a wind event creating an unfiltered ground level release. The OF–H Basins are the passive engineered features that will survive the wind event and mitigate the consequences of the wind event.

It is Unlikely that onsite receptors and facility workers would be at the site of the release during the wind event. In addition, the wind that causes the release is assumed to provide some initial dispersion of the released solutions. The onsite receptor and the facility worker are more likely to be exposed after the wind has passed and an assessment of damage has been initiated. The frequency of a wind event is classified as Unlikely. The consequences of a wind event to the onsite receptor and facility worker are classified as high. The consequences of a wind event to the offsite receptor are low. The combination of Unlikely frequency and high consequence results in a Scenario Class I.

The ACs that mitigate the consequences of a wind event are the Segregated Solvent Activity Limits, the emergency response program and related spill response procedures. These controls provide instructions regarding cleanup of radioactive and chemical spills. Their use during cleanup operations should reduce the consequences of the wind event to medium. A reduction of consequences results in a revised Scenario Class II.

8.3.2.8.3 EXTREME WEATHER–EXTREME HIGH OR LOW TEMPERATURES

The H–Canyon PHA (Ref. 8) (PHA Event AL–07) considers temperature extremes that affect the solution temperature in OF–H process vessels to be a significant event because the facility worker could receive a significant radiological dose or exposure to hazardous chemicals from an inadvertent criticality caused by over–concentration of the fissile material in the A–Line tanks.

A passive engineered feature that prevents this event is the design and double walled construction of the EUS Tank in the H–Canyon analysis. The other A–Line Tanks do not have passive engineered features that will prevent the event. The H–Canyon PHA determined the event to be in the Extremely Unlikely frequency category. The H–Canyon event consequences were determined to be high for the facility worker and low to all other receptors. An Extremely Unlikely frequency and high consequences make this a Scenario Class II event.

There are no engineered features or ACs to prevent this event. Therefore, the H–Canyon event frequency remains in the Extremely Unlikely category and the event consequences remain high. Therefore, the event remains a Scenario Class II.

The HEU Blend Down (PHA Appendix H) considers a severe snow/ice storm event (FO–21) that could exceed the structural load capacity of a tank causing a breach of the tank and resulting in a hazardous material release. All receptors are low for radiological consequences. The chemical consequences are low for onsite and offsite receptors, but are medium for the facility worker. An Extremely Unlikely frequency combined with medium consequences is Scenario Class III. No additional discussion is necessary in this SAR.

8.3.2.8.3.1 Release Pathways and Scenarios

There are two scenarios by which the fissile material in the A–Line tanks can be over–concentrated. The first is by long term evaporation from high ambient temperatures. As the water in the fissile material solution evaporates, the fissile material can concentrate above the

concentration limits. When the fissile material exceeds the concentration limit, an inadvertent criticality may occur.

The other mechanism is over–overconcentration of the fissile material by freezing. As the water in the solutions freezes, it is assumed that the freezing water selectively concentrates the fissile material (typically U–235) into the unfrozen part of the water. The freezing scenario projects that the solution will start freezing at the tank walls and slowly work toward the center of the tank. As the volume of liquid in the center of the tank becomes smaller, the fissile material in the liquid concentrates until the critical concentration is exceeded and a criticality occurs.

The PHA (Appendix H) flooding events (FO–19 and NU–22) due to heavy rain are BEU for frequency with no Scenario Class listed. The radiological consequences to the onsite receptor and the chemical consequences to the facility worker are medium with all other consequences low. These PHA (Appendix H) events are not considered further in this SAR section (Ref. 9).

8.3.2.8.3.2 Preventive and Mitigative Features H–Canyon Building

Temperature extremes due to weather are typically not a problem inside the H–Canyon structure, even in the processing canyons. Therefore, preventive or mitigative features to prevent a criticality from overconcentration of fissile material solutions are not required for H–Canyon because the temperatures in the canyons do not approach either freezing or extremely high temperatures.

8.3.2.8.3.3 Preventive and Mitigative Features H–Area Outside Facility

For most processes in OF–H, the only effect of freezing conditions and solutions will be process equipment damage and loss of production. There are no controls identified that are necessary to prevent or mitigate freezing of process solutions in any OF–H vessels except for the A–Line Tanks.

For the A–Line Tanks in OF–H, there has not been any credible identified scenario for over–concentrating the fissile material solutions by extremely high temperatures caused by variations in the weather. The normal programmatic and procedural controls (e.g., roundsheet readings of liquid level and specific gravity) are sufficient to prevent over–concentration of the solution from high temperatures. Additionally, at the highest expected summertime temperatures, it would take many days to cause the solutions in the A–Line or the EUS Tanks to over–concentrate. Because of the expected slow concentration from high temperatures, there are no SAR or TSR level controls required. The DCA contains the necessary controls to prevent a criticality from this scenario.

Overconcentration due to freezing is also expected to be a long–term event. For the EUS Tank, a calculation, S–CLC–H–00481 (Ref. 81), determined that freezing of the tank contents was a BEU event. For the other A–Line Tanks, it is judged to be Extremely Unlikely that the weather will remain cold enough for a sufficiently long period to cause the contents of these tanks to freeze. The normal programmatic controls required to protect the equipment and process

solutions from freezing are sufficient to prevent over–concentration of the fissile material solutions in the A–Line Tanks from freezing. The H–Canyon DCA (Ref. 37) specifies controls that will prevent the A–Line fissile material solutions from over–concentration from freezing.

A criticality from freezing in the A–Line Tanks is expected to remain as an Extremely Unlikely event with high consequences to the facility worker. Therefore, this event remains a Scenario Class II event.

8.3.3 CONTINUED OPERATION WITH THE ABANDONED OLD HB–LINE EXHAUST DUCT

8.3.3.1 Background and Description of the Old HB–Line Exhaust Duct

The Old HB-Line Exhaust Fans located in the 292-H Fan House have been replaced by the Third/Fourth Level HB-Line Exhaust Fans located in Room 307 of H-Canyon. The new exhaust fan system was installed by Project CL03002 in 2006. The new system includes two HEPA filter banks and two exhaust fans downstream of the filters. The fans discharge directly into the Warm Canyon through the wall on the north side of Room 312. The fans will normally operate with one fan running and one fan in stand-by. The fans are interlocked to allow the standby fan to start under a low vacuum condition. The PLC logic delays the start of the stand-by fan, so that the fan in "run" will have time to come on line and restore vacuum. Both fans have emergency power available through the H-Canyon Emergency DG. There is also an interlock between the exhaust fans and the Canyon Supply Fans. If a low vacuum condition exists at the HEPA filter inlet duct, a pressure switch will activate the relay within the Canyon Supply system controls on the Second Level of H-Canyon that will shut down the running Canyon Supply fans and activate a visual/audible alarm in the H-Canyon Control Room. The system belongs to HB-Line.

The H–Canyon and HB–Line accident analyses assume that for any accident that occurs inside H–Canyon or HB–Line, any airborne particulates released in the event remain suspended in the glovebox, room, or canyon exhaust air streams. The basic assumption is that the airborne radioactive particulates remain in the canyon exhaust air stream and are filtered by the sand filters before release to the environment from the top of the 291–H Stack. The accident analysis assumes that if an accident occurs in these facilities that there is not a significant unfiltered release pathway to the environment. The OHBL Exhaust Fans in 292-H have been abandoned in place and the exhaust duct has been isolated. The OHBL ductwork and fan housings upstream of the HEPA filter housing remained under a vacuum from the Canyon Exhaust System and continued to be used as the flow path from the HEPA Filter Room exhaust and the RVV System exhaust to the Canyon Exhaust Tunnel. In 2006 Project CL03002 installed the new exhaust fan system and the OHBL Exhaust fans abandoned in place with both sides of the ductwork isolated by blanks installed in the HEPA filter housing and under vacuum from the Canyon Exhaust System.

8.3.3.2 Controls for the Old HB–Line Exhaust Duct

The risk of a leak into the OHBL Exhaust Duct involves the potential for a ground level, unfiltered release of radioactive material. A ground level, unfiltered release could have an adverse impact on the OEP, more commonly called the collocated worker, and the MOI. This risk is reduced by preventing the ground level, unfiltered release or mitigating the radiological and hazardous chemical consequences of the leak. With the completion of Project CL03002, the potential for an unfiltered release of canyon air through the OHBL exhaust duct has been eliminated. Based on process knowledge and radiological surveys, residual contamination remains in the abandoned ductwork, however, this material will not represent a significant hazard and source term if it is released to the atmosphere in 292-H. If the structural integrity of the abandoned OHBL Exhaust System components in 292–H is not compromised, there will not be a release to the environment because the abandoned OHBL Exhaust System is isolated and remains under a vacuum. Therefore, no Canyon Exhaust air will enter the abandoned OHBL exhaust duct and no residual contamination can be released. The Structural Integrity program is used to confirm integrity of the OHBL exhaust ducts.

For the tornado, Calculation T-CLC-H-00312 (Ref. 145) has shown that in winds stronger than PC-2 but less than PC-3 levels, the concrete 291-H stack will fail at about the 68-foot level. Calculation T-CLC-H-00799 (Ref. 146) determined that the stack falling from the 68-foot height will collapse part of the 292-H roof. The collapsed roof would damage or fail the OHBL duct and filter housing in 292-H, but the legacy residual contamination inside the OHBL duct does not represent a significant hazard and source term if it is released to the atmosphere in 292-H.

With the completion of Project CL03002, the original OHBL Exhaust Fans in 292-H have been abandoned in place and the exhaust pathway from the leaking ductwork located in the Canyon Exhaust Tunnel has been isolated by removing the HEPA filters and installing blanks in the filter housings in the 292-H OHBL Filter Room. In addition, the power supply for the original fans located in 292-H has been disconnected as part of Project CL03002. The ductwork downstream of the HEPA filter housing in Building 292-H remains under vacuum and is used as the flow path to the Canyon Exhaust for the HEPA Filter Room exhaust and for the RVV System exhaust. Therefore, the controls that were in place prior to the completion of Project CL03002 have been removed.

The previous controls requiring signs to be posted around the abandoned OHBL Exhaust System and periodic visual inspections of the abandoned OHBL Exhaust System in 292-H are no longer required. The abandoned OHBL duct does not represent a significant hazard and the source term if released to the atmosphere in 292-H would result in negligible consequences. Also, a release of the residual contamination would require a breach in the duct and a failure of the canyon ventilation system. The likelihood of these events occurring together is considered to be extremely low.

8.3.3.3 Accident Analysis for the Abandoned Old HB–Line Exhaust Duct

The OHBL exhaust fans in 292-H have been abandoned in place, and the exhaust duct has been isolated from 292-H by the removal of the HEPA filters in the 292-H OHBL filter room and

installation of blanks in the filter housings as a result of the completion of Project CL03002. The power supply for the original fans located in 292-H has been disconnected.

The postulated event for this system is the release of any radioactive source term that has accumulated on the abandoned OHBL Exhaust System components in 292–H. The original analysis (i.e., before the OHBL Exhaust System was abandoned and the HEPA filters were still in place) assumed that the most likely accidental release scenario was the release of a puff of radioactive materials from an impact with, or from dropping, the HEPA filters and a fire around the OHBL Exhaust System HEPA filters or fans that causes a radiological material release. The source term from a fire would be significantly greater than that expected from an impact on the HEPA filters; therefore, the fire was considered the bounding scenario. Since the completion of Project CL03002, the OHBL HEPA filters have been removed from 292-H and there is only a residual radioactive source term remaining in the abandoned OHBL Exhaust System components. A fire in Building 292–H, potentially affecting the HEPA filters, was assessed qualitatively. Based on the conservative estimates of the filter loading, extended for prolonged filter change periods, less than 1.4E–02 grams of radioactive material would have been released from a HEPA fire event. Accordingly, consequences of a single fire event that affects the HEPA filters, including radioactive material held up in the ventilation ducts in 292–H, was judged to be bounded by the existing analysis for H–Canyon and OF-H.

The OHBL exhaust fans in 292-H have been abandoned in place and the OHBL HEPA filters have been removed from 292-H; therefore, there should be no releases from the abandoned OHBL Exhaust System in 292-H during routine operations. Two or more Canyon Exhaust Fans will normally be running which will ensure that the abandoned OHBL Exhaust System components in 292-H will remain under a vacuum.

The RVV System takes chemical fumes from a number of cold feed tanks in Buildings 221-H and 211-H and exhausts the chemical fumes into the OHBL duct downstream of the abandoned OHBL exhaust fans (blanked upstream in the filter housing) before the OHBL duct enters the exhaust tunnel. The RVV fans are located in 292-H and are assumed to remain operable following a DBE. Upon the loss of the Canyon exhaust fans, the RVV fans will slightly pressurize the abandoned OHBL duct and filter housing and exhaust into the canyon exhaust tunnel. In the event the abandoned duct downstream of the OHBL exhaust fans fails in a DBE, the RVV system chemical fumes and the residual contamination that remains in the abandoned OHBL duct will not represent a significant hazard and source term if it is released to the atmosphere in 292-H.

8.3.3.3.1 EVENT FREQUENCIES FOR THE ABANDONED OLD HB–LINE EXHAUST LEAK

This section evaluates the frequency for a ground level, unfiltered release following any analyzed accident in either H–Canyon or HB–Line. This section also evaluates the potential for a ground level, unfiltered release during facility operations against a facility standby condition.

The accidents that could be affected by the leak into the abandoned OHBL Exhaust Duct are those accidents that depend upon the canyon exhaust system to mitigate the accident

consequences. Specifically for H–Canyon, these accidents are a fire, hydrogen deflagration, TBP/Nitric Acid Runaway Reaction (Red Oil explosion), a PVV Filter explosion, and a criticality. The other analyzed events are either liquid releases or are already modeled as ground level airborne release events. The only H–Canyon events that will be considered are these five events.

8.3.3.3.1.1 Impact on Accident Frequencies in the Documented Safety Analysis

An air leak into the abandoned OHBL Exhaust Duct from the Canyon Exhaust Tunnel does not affect the frequency of any analyzed accident in either the H–Canyon or HB–Line.

8.3.3.4 Conclusion for the Abandoned Old HB-Line Exhaust

Based on process knowledge and radiological surveys the risk evaluation shows that the additional risks of a ground level, unfiltered release of radioactive material from the abandoned OHBL Exhaust Duct is very small.

8.3.4 WASTE REPACKAGING

The Consolidated Hazards Analysis (CHA) (Ref. 138) for the Repackaging of Solid Waste Boxes inside H–Canyon identifies several potential significant accidents (deflagration, fire, spill, and impact). The CHA determined that the deflagration event is BEU and the other events are Category B events. Because the unmitigated consequences of the impact event are assumed to challenge the evaluation guidelines for the 100–meter onsite worker, the repackaging operations are carried forward into the SAR for additional analysis. Additionally, controls were determined to be needed to protect the assumptions concerning deflagrations. The CHA determined the unmitigated impact and spill events to be Anticipated events and the fire to be Unlikely. The worst case unmitigated event consequences were classified as high to the facility worker, moderate to the collocated worker, and negligible to the offsite public. In the unmitigated CHA evaluation, no passive or active controls were considered that would mitigate or prevent the events. When the active systems and ACs are considered (described below), the consequences of the events that occur inside the canyon are reduced to negligible for the collocated and facility workers. There is no mitigation available for those events that occur outside the canyon. For simplicity, the numerical frequency (mitigated) assigned to the three events is the low end of the Anticipated Range and the midpoint of the Unlikely Range. These are conservative assumptions to use but do not indicate a significant frequency shift by considering the controls so that the event frequencies remain Anticipated or Unlikely.

8.3.4.1 Release Pathways and Scenarios

The CHA evaluated four different scenarios. The first scenario evaluated was an explosion (expected to be a deflagration) from hydrogen accumulation or the accumulation of Volatile Organic Compounds (VOCs) that exceed the LFL of these compounds in air. Hydrogen is generated by radiolysis and the VOCs from broken or leaking containers of organic liquids that may be in the LSBs. A deflagration could release radioactive materials as an airborne particulate

or cause physical impacts to the facility worker. The CHA determined that a deflagration from either hydrogen or VOC accumulation was an incredible event. This conclusion was based on the presence of filters on the SLB or LSB that allow the hydrogen and VOCs to diffuse from the SLBs and LSBs and the sampling of the LSB headspace. Since it was determined that vented LSBs and SLBs will not exceed the LFL of the flammable gases or vapors, and the headspace of the LSBs will be sampled prior to receipt by H-Canyon, the CHA determined that an explosion was a BEU event.

The second event evaluated was a fire that involved the LSB or SLB. The combustible material in or around the SLB/LSBs could be ignited and the resulting fire would release the radioactive material as airborne particulates. The fire could be initiated from any source, e.g., static electricity sparks, sparks generated during box lid removal or installation, movement of the items inside the boxes, sparks from impacts or material handling activities, open flames or radiant heat from a nearby fire, and other potential ignition sources.

The third event evaluated in the CHA was an impact event. This could be during transportation or movement of the SLB or LSB, material handling activities, dropped materials or components, forklift impacts, shaking or movement from natural phenomena events, vehicle crashes, and many other events that could result in an external impact to the boxes or items being repackaged. The CHA determined that an impact event would release radioactive material as airborne particulates.

The final event evaluated in the CHA was a spill or leak of liquids packaged in the LSBs or SLBs. In this event, the liquid is released to the Canyon floors or the lag storage pad. There would be an initial splash term and an evaporative resuspension term in determining the consequences. Again, the radioactive material would be released as an airborne particulate.

In all cases the CHA assumed all of the MAR, i.e., 1600 Plutonium Equivalent Curies (PEC) (equivalent Pu-239) was involved in the event. The damage ratio, leak path factor, and airborne release rate and RFs changed depending upon the accident type evaluated. In the mitigated analysis, the only difference in the scenarios or release pathways is the inclusion of the confinement offered by the Canyon Structure and the Canyon Exhaust System for those events occurring inside the canyon. These systems, which are credited safety systems for other H–Canyon accident scenarios, significantly reduce the leak path factor and therefore, the source term for the accident. If the accident occurs outside the H–Canyon facility, there is no mitigation available and the leak path factor is one. The combined result of the sand filter and the stack release height is to reduce the source term by a factor of about 400 for the offsite public. This is a conservative factor to apply to the onsite worker at 100-meters also since the actual stack effect will give a slighter higher source reduction factor for the onsite worker. With all other parameters being equal (e.g., MAR, DR, airborne release fraction, RF), the consequences from an accident inside the canyon will be about a factor of 400 less than the consequences for the same accident that occurs outside the confines of the canyon.

8.3.4.2 Preventive and Mitigative Features

Since the consequences of the impact event to the facility and onsite (100–meter) workers are assumed to challenge the evaluation guidelines, it has been determined appropriate to designate existing H–Canyon programmatic controls and systems as providing a SS function to protect these receptors. Additionally, to protect the assumptions related to ensuring that a deflagration in the SLB and LSB remains BEU, new SACs have been developed to protect the assumptions used in the CHA related to these events.

For the evaluated events the Emergency Response Program and the Rad Con Program are credited with mitigation. The Rad Con Program provides mitigation by ensuring that radiological exposures and doses to all personnel are maintained ALARA and by providing job specific instructions to the facility workers on the PPE to use to reduce their exposure potential. The Emergency Preparedness Program mitigates the accident consequences by ensuring that the appropriate organizations (e.g., Fire Department, Operations, Medical, Security, etc.) are available to respond to emergency situations and take the appropriate actions to recover from the event while reducing the spread of contamination and protecting personnel. For events inside H–Canyon, the Canyon Exhaust System and the confinement provided by the Canyon Structure mitigate the consequences to the onsite workers and the offsite public by ensuring airborne radioactive particulates are filtered before being released to the environment.

Programmatic controls that prevent the event are the Rad Con Program, and the Hoisting and Rigging Program. The Rad Con Program prevents a radiological exposure by ensuring the facility workers wear the appropriate PPE and are fully qualified to perform the required tasks in a radiological work area. The Hoisting and Rigging Program prevents the event by ensuring that all lifting is done by accepted procedures that minimize the potential for the lifted object to fall.

Vented LSBs and SLBs have been shown to be non-flammable (Ref. 139, 140, 141). Therefore, a hydrogen or VOC deflagration is not credible for containers that have one or more filter vents installed. Before the LSBs can be moved from SWMF or the SLBs removed from H–Canyon, it is an initial condition that the filter vents have to be installed on the LSB/SLB. As long as one filter vent is installed, there is no potential for a hydrogen or VOC deflagration in the waste boxes. Additionally, only LSBs that have sample data to verify that the headspace is less than 10% of the LEL will be accepted at H-Canyon. See the CHA for additional details (Ref. 138).

Based on the minimum hydrogen diffusivity through the SWMF approved and analyzed filter vents, it has been demonstrated that one filter vent is sufficient to remove the hydrogen generated by 2400 PEC. The LSBs and SLBs have at least one installed filter vent and are limited to a maximum of 1600 PEC-239. Therefore, the accumulation of hydrogen above flammable concentrations in an LSB or SLB is not a credible hazard.

The concern with VOCs is that containers with liquid organics may leak and evaporate, causing the atmosphere inside the boxes to reach a flammable VOC–air mixture. A broad sampling of the head space gases in the SLBs has not shown a flammable atmosphere in any of the sampled boxes. Therefore, the CHA has concluded that the boxes will not reach a flammable atmosphere based on the samples taken. Reference 129 confirms that sampling of head space gases of waste containers outside inner layers of confinement are representative of the entire void space of the

container. It is assumed that normal "breathing" of the boxes because of temperature and atmospheric pressure changes will dilute the VOCs in the box head space such that a flammable mixture will not be available in the boxes.

This analysis assumes that the filter vents provide the vent capability to ensure that a flammable mixture does not accumulate in the SLB or LSB head space. This analysis also assumes that it is an initial condition that before a LSB is received in H–Canyon that the LSB will have at least one filter vent installed. Additionally, it is assumed that H–Canyon will install a filter vent on SLBs to ensure that when the SLBs are returned to SWMF that the boxes are vented to prevent the accumulation of a flammable mixture inside the boxes. To protect these initial conditions, two SACs were identified to verify that at least one filter vent is installed on each LSB/SLB and one SAC was identified to ensure that only LSBs with headspaces less than 10% of the LEL are accepted at H-Canyon. The filter vent has to be installed on the LSB. The following SACs are identified:

- Prior to beginning the Repackaging activities or movement to lag storage, verify that the received LSB has at least one filter vent installed.
- Prior to closure of a SLB after the Repackaging activities, verify that the SLB has at least one filter vent installed.
- Only LSBs that have sample data to verify that the headspace is less than 10% of the LEL will be accepted at H-Canyon

Because of the expected short time the LSBs and SLBs will be in H–Area, including lag storage time, there is no potential for a flammable atmosphere to develop in the LSBs/SLBs while they are in H–Area. Therefore, there is no requirement for a periodic inspection of the filter vents or resampling by H-Area of the LSB headspace.

There are no other specific controls required for repackaging the LSB items to a SLB within H–Canyon.

Table 8.3–1 Summary Table of Results of Preliminary Hazards Analysis Risk Matrix Binning for H–Canyon Operations

		CREDITING PASSIVE DESIGN FEATURES ONLY			CREDITING PREVENTIVE AND MITIGATIVE FEATURES			
Scenario	**See Accident Description**	**Scen –ario Class**	**Consequence**	**Frequency**	**Scen –ario Class**	**Consequence**	**Frequency**	**Receptor**
Loss of Containment – Coil and Tube Failure from Dissolving, Head End, Solvent Extraction, Evaporation and FWR to SCW Return System	8.3.2.1.1	I	Medium	Anticipated	III	Low	Unlikely	Offsite
Loss of Containment – Coil and Tube failure from Dissolving, Head End, Solvent Extraction, Evaporation, FWR, and Waste Disposal to the Circulating Cooling Water Return System	8.3.2.1.1	I	Medium	Anticipated	IV	Low	Extremely Unlikely	Facility Worker, Onsite, Offsite
Loss of Containment – Transfer Error to either Cooling Water System from any Canyon Process	8.3.2.1.2	I	High	Unlikely	NA	Medium	BEU	Facility Worker, Onsite, Offsite
Explosion – TBP/Nitric Acid Uncontrolled Reaction in Evaporators, Rerun, and Waste Disposal	8.3.2.2.1	I	High	Unlikely	II	Medium	Unlikely	Facility Worker, Onsite, Offsite
Explosion – TBP/Nitric Acid Uncontrolled Reaction in A–Line	8.3.2.2.1	I	High	Unlikely	II	Medium	Unlikely	Facility Worker

Table 8.3–1 Summary Table of Results of PHA Risk Matrix Binning for H–Canyon Operations (Continued)

		CREDITING PASSIVE DESIGN FEATURES ONLY			CREDITING PREVENTIVE AND MITIGATIVE FEATURES			
Scenario	**See Accident Description**	**Scen –ario Class**	**Consequence**	**Frequency**	**Scen –ario Class**	**Consequence**	**Frequency**	**Receptor**
Explosion – TBP/Nitric Acid Uncontrolled Reaction in ARU	8.3.2.2.1	II	High	Extremely Unlikely	II	Medium	Extremely Unlikely	Facility Worker
Explosion – TBP/Nitric Acid Uncontrolled Reaction in Head End	8.3.2.2.1	III	Medium	Extremely Unlikely	III	Medium	Extremely Unlikely	Onsite, Offsite
Explosion – Anion Resin in FWR	8.3.2.2.2	II	High	Extremely Unlikely	III	Medium	Extremely Unlikely	Onsite, Offsite
Explosion – Hydrogen Deflagration in Dissolver	8.3.2.2.3	I	High	Anticipated	IV	Low	Extremely Unlikely	Onsite, Offsite
Explosion – Flammable Gas/Vapor Deflagration from Radiolysis of Water in Head End, Solvent Extraction, FWR, Evaporation, Waste Disposal and Rerun; ammonia generated by waste solution neutralization; and organic vapor	8.3.2.2.3	I	High	Anticipated	IV	Low	Extremely Unlikely	Onsite, Offsite

Table 8.3–1 Summary Table of Results of PHA Risk Matrix Binning for H–Canyon Operations (Continued)

		CREDITING PASSIVE DESIGN FEATURES ONLY			CREDITING PREVENTIVE AND MITIGATIVE FEATURES			
Scenario	**See Accident Description**	**Scen –ario Class**	**Consequence**	**Frequency**	**Scen –ario Class**	**Consequence**	**Frequency**	**Receptor**
Explosion – Hydrogen Deflagration from Radiolysis of Water in EUS Tank and A–Line Tank	8.3.2.2.3	II	High	Extremely Unlikely	IV	Low	Extremely Unlikely	Facility Worker
Explosion – AN in PVV Filters	8.3.2.2.4	I	High	Unlikely	III	Medium	Extremely Unlikely	Facility Worker, Onsite, Offsite
Explosion – Organic Vapor Deflagration in the EUS Tank or an A–Line Tank Vapor Space	8.3.2.2.5	I	High	Unlikely	II	High	Extremely Unlikely	Facility Worker
Uncontrolled Reaction/Fire – Resin Digestion	8.3.2.2.6	I	High	Unlikely	III	Low	Unlikely	Facility Worker
Fire – Anion Resin in FWR	8.3.2.3.1	I	High	Anticipated	II	Medium	Unlikely	Onsite, Offsite
Natural Phenomena – Earthquake Induced Resin Fire in FWR	8.3.2.3.2	I	High	Unlikely	N/A	Medium	BEU	Onsite, Offsite
Fire – Organic or Solvent Material in Solvent Extraction Cycles	8.3.2.3.3	I	High	Unlikely	II	Medium	Unlikely	Onsite, Offsite

Table 8.3–1 Summary Table of Results of PHA Risk Matrix Binning for H–Canyon Operations (Continued)

		CREDITING PASSIVE DESIGN FEATURES ONLY			CREDITING PREVENTIVE AND MITIGATIVE FEATURES			
Scenario	**See Accident Description**	**Scen –ario Class**	**Consequence**	**Frequency**	**Scen –ario Class**	**Consequence**	**Frequency**	**Receptor**
Fire – Organic or Solvent Material in Rerun, Waste Disposal, and Segregated Solvent	8.3.2.3.3	II	Medium	Unlikely	III	Low	Unlikely	Facility Worker, Onsite, Offsite
Fire – Organic or Solvent Material	8.3.2.3.3	II	Medium	Unlikely	III	Low	Unlikely	Facility Worker
Fire – Wildland or Other External Fire – OF–H/ A–Line	8.3.2.3.4	II	Medium	Unlikely	IV	Low	Extremely Unlikely	Facility Worker
Inadvertent Criticality in Canyon Unit Ops.	8.3.2.4	I	Medium	Anticipated	II	Medium	Unlikely	Facility Worker
Inadvertent Criticality in Canyon Ventilation Sys.	8.3.2.4	II	Medium	Unlikely	III	Medium	Extremely Unlikely	Facility Worker
Inadvertent Criticality in Canyon Railway Tunnel	8.3.2.4	II	High	Extremely Unlikely	N/A	High	BEU	Facility Worker

Table 8.3–1 Summary Table of Results of PHA Risk Matrix Binning for H–Canyon Operations (Continued)

	CREDITING PASSIVE DESIGN FEATURES ONLY				CREDITING PREVENTIVE AND MITIGATIVE FEATURES			
Scenario	**See Accident Description**	**Scen –ario Class**	**Consequence**	**Frequency**	**Scen –ario Class**	**Consequence**	**Frequency**	**Receptor**
Inadvertent Criticality in Outside Facilities Ops.	8.3.2.4	II	High	Extremely Unlikely	II	High	Extremely Unlikely	Facility Worker
Inadvertent Criticality in Outside Facilities Basin	8.3.2.4	II	High	Extremely Unlikely	II	High	Extremely Unlikely	Facility Worker
Loss of Containment – Transfer Error to Outside Facilities from Dissolving, Head End, Solvent Extraction, Evaporation, Waste Disposal, FWR, and Rerun	8.3.2.5.1	II	Medium	Unlikely	II	Medium	Unlikely	Facility Worker, Onsite, Offsite
Loss of Containment – Uncontrolled Reaction Ruthenium Volatilization	8.3.2.5.2	III	Low	Anticipated	III	Low	Anticipated	Onsite, Offsite, Facility Worker
Loss of Containment – Uncontrolled Reaction HAN – Nitric Acid	8.3.2.5.3	I	High	Anticipated	N/A	High	BEU	Facility Worker
Loss of Containment – Uncontrolled Reaction on Third Level	8.3.2.5.4	II	Medium	Unlikely	II	Medium	Unlikely	Facility Worker
Loss of Containment – Uncontrolled Reaction in Outside Facilities	8.3.2.5.5	II	Medium	Unlikely	II	Medium	Unlikely	Facility Worker

Table 8.3–1 Summary Table of Results of PHA Risk Matrix Binning for H–Canyon Operations (Continued)

		CREDITING PASSIVE DESIGN FEATURES ONLY			CREDITING PREVENTIVE AND MITIGATIVE FEATURES			
Scenario	**See Accident Description**	**Scen –ario Class**	**Consequence**	**Frequency**	**Scen –ario Class**	**Consequence**	**Frequency**	**Receptor**
Loss of Containment – Release of Entire Contents of One or More Tanks in OF–H Bulk Chemical Storage and ARU	8.3.2.5.6	I	High	Unlikely	II	Medium	Unlikely	Facility Worker
Sample Aisle Internal Exposure	8.3.2.6.1	I	High	Anticipated	I	High	Unlikely	Facility Worker
Inadvertent Personnel Radiation Exposure in the GVC due to Suckback in GV Piping (irradiated HEU processing)	8.3.2.6.2	I	Medium	Anticipated	III	Low	Anticipated	Facility Worker
Inadvertent Personnel Radiation Exposure in the GVC or Sample Aisle due to Liquid Radioactive Material release (high alpha solution)	8.3.2.6.3	I	Medium	Anticipated	III	Low	Anticipated	Facility Worker
Inadvertent Personnel Radiation Exposure in the Railroad Air Lock due to Open Shielding Door	8.3.2.6.4	I	High	Anticipated	II	Medium	Unlikely	Facility Worker

Table 8.3–1 Summary Table of Results of PHA Risk Matrix Binning for H–Canyon Operations (Continued)

	CREDITING PASSIVE DESIGN FEATURES ONLY				CREDITING PREVENTIVE AND MITIGATIVE FEATURES			
Scenario	**See Accident Description**	**Scen –ario Class**	**Consequence**	**Frequency**	**Scen –ario Class**	**Consequence**	**Frequency**	**Receptor**
Inadvertent Personnel Radiation Exposure in the Clean Areas of the Canyon, Liquid Radioactive Material Released in the First Level or the Personnel Corridor	8.3.2.6.5	I	Medium	Anticipated	III	Low	Anticipated	Facility Worker
External Events – Vehicle Crash Outside Facility	8.3.2.7	I	High	Anticipated	III	Low	Anticipated	Facility Worker, Onsite
External Events – Aircraft Crash Outside Facility	8.3.2.7	II	High	Extremely Unlikely	III	Medium	Extremely Unlikely	Facility Worker, Onsite
External Events – Tanker Truck Explosion in H–Canyon or Outside Facility	8.3.2.7	I	High	Unlikely	III	Medium	Extremely Unlikely	Facility Worker, Onsite
Natural Phenomena – Earthquake, High Winds, or Tornado Affects H–Canyon Process	8.3.2.8	I	High	Unlikely	II	Medium	Unlikely	Facility Worker, Onsite, Offsite
Natural Phenomena – Earthquake, Tornado, Straight Winds affect Outside Facilities	8.3.2.8	I	High	Unlikely	II	Medium	Unlikely	Facility Worker, Onsite

Table 8.3–2 Summary Table of Controls for H–Canyon and Outside Facilities H–Area Dominant Accidents

Scenario	Preventers	Mitigators
Coil and Tube Failure Release to the SCW System (Section 8.3.2.1.1) (Scenario Class I)	**Safety Class Systems:** • None. **Safety Significant Systems:** • None. **Technical Safety Requirements:** **LCOs:** • None. **Administrative Controls:** • None. **Design Features:** • Cooling Coil design and material of construction. • Vessel Design to include liquid overflow line (Passive vent feature). NOTE: When the term alarm or interlock is used in this and the other SAR tables which designate SC or SS SSCs (specifically Table 8.3–2 and the 8.4–X tables), it refers to the alarm or interlock and all associated components in the instrument loop that are required to function for the alarm or interlock to function correctly.	**Safety Class Systems:** • 281–5H SCW Delaying Basin Outlet valves. • 281–5H SCW Delaying Basin to include overflow lines to ETF. **Safety Significant Systems:** • 281–6H SCW Activity Monitors and Alarms (includes both local monitor house and remote Canyon Control Room alarms). • 281–6H SCW Diversion Valves. **Technical Safety Requirements:** **LCOs:** • 3.2.1 SCW System. **Administrative Controls:** • (SAC) 5.7.2.10.g. SCW shall not be released to Four Mile Creek with alpha or beta-gamma levels greater than 8000 d/m/ml.. • Emergency Response Program. Cooling Water Activity Response Procedures. **Design Features:** • 281–5H SCW Delaying Basin to include overflow line to ETF.

DF B.1.23, Fail–Safe Design of Canyon SC/SS Control Systems, although not specifically cited in the accident analysis, is considered a generic control that will prevent most accidents since the instruments are typically designed to fail in a safe manner.

Table 8.3–2 Summary Table of Controls for H–Canyon and Outside Facilities H–Area Dominant Accidents (Continued)

Scenario	Preventers	Mitigators
Coil and Tube Failure Release to CCW System (Section 8.3.2.1.1) (Scenario Class I)	**Safety Class Systems:** • None.	**Safety Class Systems:** • 281–4H CCW Monitors and Alarms and Automatic Timer (includes both local monitor house and remote Canyon Control Room alarms). • 281–1H CCW Diversion Valves and Motor Operators. • 281–1H CCW Delaying Basin to include overflow line to ETF.
	Safety Significant Systems: • None.	**Safety Significant Systems:** • None.
	Technical Safety Requirements: **LCOs:** • None.	**Technical Safety Requirements:** **LCOs:** • 3.2.2 CCW System.
	Administrative Controls: • None.	**Administrative Controls:** • (SAC) 5.7.2.15.c When processing or storing Pu-238, limit the amount of Pu–238 in any single FWR process tank to less than or equal to 5.0 kg. (Protects source term assumption in accident analysis.) • Emergency Response Program. Cooling Water Activity Response Procedures.
	Design Features: • Cooling Coil design and material of construction. • Vessel Design to include liquid overflow line (Passive vent feature).	**Design Features:** • 281–1H CCW Delaying Basin to include overflow line to ETF.

DF B.1.23, Fail–Safe Design of Canyon SC/SS Control Systems, although not specifically cited in the accident analysis, is considered a generic control that will prevent most accidents since the instruments are typically designed to fail in a safe manner.

Table 8.3–2 Summary Table of Controls for H–Canyon and Outside Facilities H–Area Dominant Accidents (Continued)

Scenario	Preventers	Mitigators
Inadvertent Transfer to the SCW System	**Safety Class Systems:** • None.	**Safety Class Systems:** • 281–5H SCW Delaying Basin Outlet Valves. • 281–5H SCW Delaying Basin to include overflow lines to ETF.
(Section 8.3.2.1.2) (Scenario Class I)	**Safety Significant Systems:** • None.	**Safety Significant Systems:** • 281–6H SCW Activity Monitors and Alarms (includes both local monitor house and remote Canyon Control Room alarms). • 281–6H SCW Diversion Valves.
	Technical Safety Requirements: **LCOs:** • None. **Administrative Controls:** • (SAC) 5.7.2.10.b. All flexible jumper installation and all piping route changes shall require independent verification of correct installation.	**Technical Safety Requirements:** **LCOs:** • 3.2.1. SCW System. **Administrative Controls:** • (SAC) 5.7.2.10.g. SCW shall not be released to Four Mile Creek with alpha or beta-gamma levels greater than 8000 d/m/ml.. • Emergency Response Program. Cooling Water Activity Response Procedure.
	Design Features: • None.	**Design Features:** • 281–5H SCW Delaying Basin to include overflow lines to ETF.

DF B.1.23, Fail–Safe Design of Canyon SC/SS Control Systems, although not specifically cited in the accident analysis, is considered a generic control that will prevent most accidents since the instruments are typically designed to fail in a safe manner.

Table 8.3–2 Summary Table of Controls for H–Canyon and Outside Facilities H–Area Dominant Accidents (Continued)

Scenario	Preventers	Mitigators
Inadvertent Transfer to the CCW System (Section 8.3.2.1.2) (Scenario Class I)	**Safety Class Systems:** • Blanks or blank equivalents on all unused high vertical cooling water return lines in the Hot and Warm canyons. **Safety Significant Systems:** • None. **Technical Safety Requirements:** **LCOs:** • None. **Administrative Controls:** • (SAC) 5.7.2.10.a. Blanks or blank equivalents shall be installed on CCW high vertical and horizontal return line nozzles. These blanks or blank equivalents shall be inspected every 18 months. • (SAC) 5.7.2.10.b. All flexible jumper installation and all piping route changes shall require independent verification of correct installation. **Design Features:** • None.	**Safety Class Systems:** • 281–4H CCW Monitors and Alarms and Automatic Timer (includes both local monitor house and remote Canyon Control Room alarms). • 281–1H CCW Diversion Valves and Motor Operators. • 281–1H CCW Delaying Basin Design to include overflow line to ETF. **Safety Significant Systems:** • None. **Technical Safety Requirements:** **LCOs:** • 3.2.2 CCW System. **Administrative Controls:** • (SAC) 5.7.2.15.c When processing or storing Pu-238, limit the amount of Pu–238 in any single FWR process tank to less than or equal to 5.0 kg. (Protects source term assumption in accident analysis.) • Emergency Response Program. Cooling Water Activity Response Procedure. **Design Features:** • 281–1H CCW Delaying Basin Design to include overflow line to ETF.

DF B.1.23, Fail–Safe Design of Canyon SC/SS Control Systems, although not specifically cited in the accident analysis, is considered a generic control that will prevent most accidents since the instruments are typically designed to fail in a safe manner.

Table 8.3–2 Summary Table of Controls for H–Canyon and Outside Facilities H–Area Dominant Accidents (Continued)

Scenario	Preventers	Mitigators
Explosion–TBP–nitric acid runaway reaction (Section 8.3.2.2.1) (Scenario Class I)	**Safety Class Systems:** • None.	**Safety Class Systems:** • H-Canyon Building Structure. • H-Canyon Exhaust Air Tunnel. • Sand Filters 294–H and 294–1H. • H-Canyon Supply Fan Interlock, for low Canyon Exhaust Air Tunnel vacuum. • Canyon Exhaust Fans and Fan Damper Air System. • 254–19H/292–H/292-2H Building Structure. • 254–19H DG System.
	Safety Significant Systems: • ROV Nozzles for Tanks 12.6, 12.8, 13.5, 13.8, 14.6, 14.8, 15.1, and 15.3. • High Temperature Interlocks on Evaporators 6.8E, 7.6E, 7.7E, 9.1E, 9.2E, 11.3E, 17.2, 17.6, and 17.8E. • ARU High Temperature Interlock. • Low Liquid Level Pump Cutoff Interlock on ARU Feed Tank.	**Safety Significant Systems:** • 291–H Stack and Stack Liner.
	Technical Safety Requirements: **LCOs:** • 3.1.4 Evaporator Temperature Instrumentation. • 3.1.12 ARU Temperature and Feed Tank Level Instrumentation.	**Technical Safety Requirements:** **LCOs:** • 3.3.1 H–Canyon Exhaust Ventilation System. • 3.3.3 Fan Damper Air System. • 3.4.1 254–19H DG.

Table 8.3–2 Summary Table of Controls for H–Canyon and Outside Facilities H–Area Dominant Accidents (Continued)

Scenario	Preventers	Mitigators
	Administrative Controls: • (SAC) 5.7.2.11.a. All acidic evaporator feed that has been in contact with organic solutions shall be processed through a decanter prior to evaporation. • (SAC) 5.7.2.11.b. Continuous layers of organic (TBP) shall not be fed to the ARU evaporator. • (SAC) 5.7.2.11.g. An inspection shall be completed every 18 months to ensure the ROV Nozzles are properly installed. • (SAC) 5.7.2.11.j. All aqueous feed to a caustic evaporator (e.g., the GPE) shall have a pH greater than or equal to 7.0 except during acid flush. • (SAC) 5.7.2.11.k. Limit the single transfer amount of pure TBP into the canyon to 750 pounds. • Configuration Control Program. • USQ Program.	**Administrative Controls:** • None

Table 8.3–2 Summary Table of Controls for H–Canyon and Outside Facilities H–Area Dominant Accidents (Continued)

Scenario	Preventers	Mitigators
Explosion–TBP–nitric acid runaway reaction (Continued) (Section 8.3.2.2.1) (Scenario Class I)	**Design Features:** • ROV Nozzles. • PVV System (nozzle area). • Vessel Design to include liquid overflow line (Passive vent feature). • Box and Tank Decanter Design ensures an efficiency greater than 90% in the decanters. • Physical disconnects (e.g., air gap) on the transfer piping for the tanks used to store the used 30 vol. % TBP in OF-H to ensure that the 30 vol. % TBP solvent cannot be transferred back into the canyon. • Physical disconnects (e.g., air gap) on the transfer piping for the Canyon Third Level Head Tanks used to transfer 30 vol. % TBP to the canyon vessels to ensure that 30 vol. % TBP cannot be transferred to the canyon vessels. • Physical disconnect (e.g., air gap) on the steam lines to the OF–H Segregated Solvent Tanks (includes Segregated Solvent and stored 30 vol. % TBP tanks).	**Design Features:** • Canyon Building and Exhaust System Design.

DF B.1.23, Fail–Safe Design of Canyon SC/SS Control Systems, although not specifically cited in the accident analysis, is considered a generic control that will prevent most accidents since the instruments are typically designed to fail in a safe manner.

.

Table 8.3–2 Summary Table of Controls for H–Canyon and Outside Facilities H–Area Dominant Accidents (Continued)

Scenario	Preventers	Mitigators
Anion Resin Explosion (Section 8.3.2.2.2) (Scenario Class I) **Note:** FWR operations are not authorized.	**Safety Class Systems:** • None. **Safety Significant Systems:** • None. **Technical Safety Requirements:** **LCOs:** • None. **Administrative Controls:** • None. **Design Features:** • None.	**Safety Class Systems:** • None. **Safety Significant Systems:** • None. **Technical Safety Requirements:** **LCOs:** • None. **Administrative Controls:** • None. **Design Features:** • None.

Table 8.3–2 Summary Table of Controls for H–Canyon and Outside Facilities H–Area Dominant Accidents (Continued)

Scenario	Preventers	Mitigators
Hydrogen Deflagration in Dissolver (Section 8.3.2.2.3) (Scenario Class I)	**Safety Class Systems:** • None.	**Safety Class Systems:** • H-Canyon Building Structure. • H-Canyon Exhaust Air Tunnel. • Sand Filters 294–H and 294–1H. • H-Canyon Supply Fan Interlock, for low Canyon Exhaust Air Tunnel vacuum. • Canyon Exhaust Fans and Fan Damper Air System. • 254–19H/292–H/292-2H Building Structure. • 254–19H DG System.
	Safety Significant Systems: • Dissolver 6.4D Air Purge System, to include the Low Air Purge/Steam Interlock. • Dissolver 6.1D Air Purge System, to include the Low Air Purge/Steam Interlock. • Instrument Air Rotameters to Dissolvers 6.1D and 6.4D and Evaporators 9.1E, 9.2E and 11.3E to include the Low Instrument Air Pressure Alarm in the Hot Canyon Control Room.	**Safety Significant Systems:** • 291–H Stack and Stack Liner.
	Technical Safety Requirements: **LCOs:** • 3.1.8 Evaporator and Dissolver Air Purge. • 3.1.9 Dissolver Air Sparge and Purge.	**Technical Safety Requirements:** **LCOs:** • 3.3.1 H–Canyon Exhaust Ventilation System. • 3.3.3 Fan Damper Air System. • 3.4.1 254–19H DG.

Table 8.3–2 Summary Table of Controls for H–Canyon and Outside Facilities H–Area Dominant Accidents (Continued)

Scenario	Preventers	Mitigators
Hydrogen Deflagration in Dissolver (Section 8.3.2.2.3) (Scenario Class I) (Continued)	**Administrative Controls:** • (SAC) 5.7.2.12.a. A minimum nitric acid concentration of 0.3M shall be maintained in the dissolver at all times when radioactive materials are present to prevent excessive hydrogen evolution. • (SAC) 5.7.2.12.e. Limit the off–gases evolved during the dissolution process to a maximum of 72 scfm. • (SAC) 5.7.2.12.k. The nitric acid concentration in Dissolvers 6.1D or 6.4D shall be greater than or equal to 2.0M at all times when Super Kukla Metals materials are present to prevent excessive hydrogen evolution. • (SAC) 5.7.2.12.l. The nitric acid concentration in Dissolvers 6.1D or 6.4D shall be greater than or equal to 3.0M at all times when Pu/Be Material is present to prevent excessive hydrogen evolution.	**Administrative Controls:** • (SAC) 5.7.2.12.d. The dissolver charging hatch shall not be bolted, weighted, or fastened down in such a manner as to prevent it lifting to relieve excessive pressure in the dissolver. • 5.7.2.19 Structural Integrity Program.
	Design Features: • Canyon and OF–H Vessel Design. • Electrical System Design.	**Design Features:** • Dissolver Design including Charging Hatch. • Canyon Building and Exhaust System Design.

DF B.1.23, Fail–Safe Design of Canyon SC/SS Control Systems, although not specifically cited in the accident analysis, is considered a generic control that will prevent most accidents since the instruments are typically designed to fail in a safe manner.

Table 8.3–2 Summary Table of Controls for H–Canyon and Outside Facilities H–Area Dominant Accidents (Continued)

Scenario	Preventers	Mitigators
Flammable Gas/Vapor Deflagration due to Radiolysis; and organic or ammonia vapor (Section 8.3.2.2.3) (Scenario Class I)	**Safety Class Systems:** • None.	**Safety Class Systems:** • H-Canyon Building Structure. • H-Canyon Exhaust Air Tunnel. • Sand Filters 294–H and 294–1H. • H-Canyon Supply Fan Interlock, for low Canyon Exhaust Air Tunnel vacuum. • Canyon Exhaust Fans and Fan Damper Air System. • 254–19H/292–H/292-2H Building Structure. • 254–19H DG System.
	Safety Significant System: • PVV System Fans and Filter Inlet Low Vacuum Alarms. • Instrument Air Rotameters to Dissolvers 6.1D and 6.4D and Evaporators 6.8E, 7.6E, 7.7E, 9.1E, 9.2E, 11.3E and 17.8E to include the Low Instrument Air Pressure Alarm in the Hot Canyon Control Room.	**Safety Significant System:** • 291–H Stack and Stack Liner.
	Technical Safety Requirements: LCOs: • 3.1.8 Evaporator and Dissolver Air Purge. • 3.3.2 PVV System.	**Technical Safety Requirements:** **LCOs:** • 3.3.1 H–Canyon Exhaust Ventilation System. • 3.3.3 Fan Damper Air System. • 3.4.1 254–19H DG.

Table 8.3–2 Summary Table of Controls for H–Canyon and Outside Facilities H–Area Dominant Accidents (Continued)

Scenario	Preventers	Mitigators
Flammable Gas/Vapor Deflagration due to Radiolysis; and organic or ammonia vapor (Section 8.3.2.2.3) (Scenario Class I) (Continued)	**Administrative Controls:** • (SAC) 5.7.2.12.a. A minimum nitric acid concentration of 0.3M shall be maintained in the dissolver at all times when radioactive materials are present to prevent excessive hydrogen evolution . • (SAC) 5.7.2.12.b. Any material charged to the dissolver shall have hydrogen generation rates less than or equal to the 3,650 day cooled Mk–22 fuel. • (SAC) 5.7.2.12.c When stored at the OF-H facility, Hanford Containers, HM–Trailers and other similar type containers (e.g., Consani Containers) that contain material that will generate hydrogen by radiolysis shall be HEPA or equivalent filter vented or purged annually. If installed, the HEPA or equivalent filters shall be inspected/replaced annually. • (SAC) 5.7.2.12.i The ammonia concentration in H-Canyon tanks 5.2, 8.4, 9.8, or 16.1 shall be less than or equal to 1500 mg/L in neutralized waste. • (SAC) 5.7.2.12.j Waste that has been in contact with organic solutions shall be processed through an evaporator prior to neutralization.	**Administrative Controls:** • (SAC) 5.7.2.12.d. The dissolver charging hatch shall not be bolted, weighted, or fastened down in such a manner as to prevent it lifting to relieve excessive pressure in the dissolver. • (SAC) 5.7.2.15.c When processing or storing Pu-238, limit the amount of Pu–238 in any single FWR process tank to less than or equal to 5.0 kg. (Protects source term assumption in accident analysis.) • 5.7.2.19 Structural Integrity Program.
	Design Features: • Canyon and OF–H Vessel Design including overflow lines. • EUS Tank Conservation Vent. • Electrical System Design.	**Design Features:** • Canyon and OF–H Vessel Design (strength). • EUS Tank Design. • Canyon Building and Exhaust System Design.

DF B.1.23, Fail–Safe Design of Canyon SC/SS Control Systems, although not specifically cited in the accident analysis, is considered a generic control that will prevent most accidents since the instruments are typically designed to fail in a safe manner.

Table 8.3–2 Summary Table of Controls for H–Canyon and Outside Facilities H–Area Dominant Accidents (Continued)

Scenario	Preventers	Mitigators
Explosion – AN in the PVV Filters (Section 8.3.2.2.4) (Scenario Class I)	**Safety Class Systems:** • None.	**Safety Class Systems:** • H-Canyon Building Structure. • H- Canyon Exhaust Air Tunnel. • Sand Filters 294–H and 294–1H. • H-Canyon Supply Fan Interlock, for low Canyon Exhaust Air Tunnel vacuum. • Canyon Exhaust Fans. • 254–19H/292–H/292-2H Building Structure. • 254–19H DG System.
	Safety Significant Systems: • None.	**Safety Significant Systems:** • 291–H Stack and Stack Liner.
	Technical Safety Requirements: **LCOs:** • None.	**Technical Safety Requirements:** **LCOs:** • 3.3.1 H–Canyon Exhaust Ventilation System. • 3.3.3 Fan Damper Air System. • 3.4.1 254–19H DG.
	Administrative Controls: • (SAC) 5.7.2.13.a. The PVV filters shall be flushed or replaced prior to reaching the maximum limit of 545 kg Ammonium Nitrate. • (SAC) 5.7.2.13.b. An ammonia scrubber shall be in the vent jumper and operated, as required, during waste neutralization for reducing the amount of ammonia being deposited on the Process Vessel Vent (PVV) filter.	**Administrative Controls:** • 5.7.2.19 Structural Integrity Program.
	Design Features • Ammonia scrubber design ensures the ammonia scrubbers are at least 95% efficient.	**Design Features:** • Canyon Building and Exhaust System Design.

DF B.1.23, Fail–Safe Design of Canyon SC/SS Control Systems, although not specifically cited in the accident analysis, is considered a generic control that will prevent most accidents since the instruments are typically designed to fail in a safe manner.

Table 8.3–2 Summary Table of Controls for H–Canyon and Outside Facilities H–Area Dominant Accidents (Continued)

Scenario	Preventers	Mitigators
Explosion–Organic Vapor Deflagration in the EUS Tank or an A–Line Tank Vapor Space (Section 8.3.2.2.5) (Scenario Class I)	**Safety Class Systems:** • None. **Safety Significant Systems:** • High Temperature Alarms on E1–1 and E4–2 Tanks. **Technical Safety Requirements:** **LCOs:** • 3.1.13 A–Line Tank Temperature Instrumentation. **Administrative Controls:**. • (SAC) 5.7.2.16.a. Limit Operating Temperatures to at least 5° C (i.e., 85° C) below the minimum 90° C flash point required by the diluent (n–paraffin) purchase specifications. **Design Features:** • Decanter Design. • Vessel Design, including overflow lines. • Conservation Vent on the EUS Tank. • Physical disconnect (e.g., air gap) on the steam line to the EUS Tank Heat Exchanger.	**Safety Class Systems:** • None. **Safety Significant Systems:** • None. **Technical Safety Requirements:** **LCOs:** • None. **Administrative Controls:** • None. **Design Features:** • EUS Tank Design

DF B.1.23, Fail–Safe Design of Canyon SC/SS Control Systems, although not specifically cited in the accident analysis, is considered a generic control that will prevent most accidents since the instruments are typically designed to fail in a safe manner.

Table 8.3–2 Summary Table of Controls for H–Canyon and Outside Facilities H–Area Dominant Accidents (Continued)

Scenario	Preventers	Mitigators
Uncontrolled Reaction/Fire–Resin Digestion (Section 8.3.2.2.6) (Scenario Class II)	**Safety Class Systems:** • None.	**Safety Class Systems:** • H-Canyon Building Structure. • H-Canyon Exhaust Air Tunnel. • Sand Filters 294–H and 294–1H. • H-Canyon Supply Fan Interlock, for low Canyon Exhaust Air Tunnel vacuum. • Canyon Exhaust Fans and Fan Damper Air System. • 254-19H/292-H/292-2H Building Structure. • 254-19H DG System
	Safety Significant Systems: • None.	**Safety Significant Systems:** • None.
	Technical Safety Requirements: **LCOs:** • None.	**Technical Safety Requirements:** **LCOs:** • 3.3.1 H–Canyon Exhaust Ventilation System. • 3.3.3 Fan Damper Air System. • 3.4.1 254–19H DG.
	Administrative Controls: • None.	**Administrative Controls:** • HB–Line criticality controls. • 5.7.2.19 Structural Integrity Program.
	Design Features: • None.	**Design Features:** • None.

DF B.1.23, Fail–Safe Design of Canyon SC/SS Control Systems, although not specifically cited in the accident analysis, is considered a generic control that will prevent most accidents since the instruments are typically designed to fail in a safe manner.

Table 8.3–2 Summary Table of Controls for H–Canyon and Outside Facilities H–Area Dominant Accidents (Continued)

Scenario	Preventers	Mitigators
Anion Resin Fire (RC–16) (Section 8.3.2.3.1) (Scenario Class I) **Note:** FWR operations are not authorized.	**Safety Class Systems:** • None. **Safety Significant Systems:** • None. **Technical Safety Requirements:** **LCOs:** • None. **Administrative Controls:** • None. **Design Features:** • None.	**Safety Class Systems:** • None. **Safety Significant Systems:** • None. **Technical Safety Requirements:** **LCOs:** • None. **Administrative Controls:** • None. **Design Features:** • None.

Table 8.3–2 Summary Table of Controls for H–Canyon and Outside Facilities H–Area Dominant Accidents (Continued)

Scenario	Preventers	Mitigators
Natural Phenomena Event–Earthquake Induced Resin Fire in FWR (Section 8.3.2.3.2) (Scenario Class I) **Note:** FWR operations are not authorized.	**Safety Class Systems:** • None. **Safety Significant Systems:** • None. **Technical Safety Requirements:** **LCOs:** • None. **Administrative Controls:** • None. **Design Features:** • None.	**Safety Class Systems:** • None. **Safety Significant Systems:** • None. **Technical Safety Requirements:** **LCOs:** • None. **Administrative Controls:** • None. **Design Features:** • None.

Table 8.3–2 Summary Table of Controls for H–Canyon and Outside Facilities H–Area Dominant Accidents (Continued)

Scenario	Preventers	Mitigators
Organic or Solvent Fire (Section 8.3.2.3.3) (Scenario Class I)	**Safety Class Systems:** • None. **Safety Significant Systems:** • Mixer–Settler Feed High Temperature Interlocks. **Technical Safety Requirements: LCOs:** • 3.1.3 Mixer–Settler Temperature Instrumentation. **Administrative Controls:** • (SAC) 5.7.2.16.a. Limit Operating Temperatures to at least 5° C below the minimum 90° C flash point (i.e., 85° C) required by the diluent (n–paraffin) purchase specifications. • (SAC) 5.7.2.16.b. Ensure that only n–paraffin that meets the minimum 90° C flash point is used in the H–Canyon and OF–H processes. **Design Features:** • Canyon and OF–H Vessel Design to include liquid overflow lines. • Electrical System Design for canyon cells where solvent is present (includes electrical jumper length and placement of motors).	**Safety Class Systems:** • H-Canyon Building Structure. • H-Canyon Exhaust Air Tunnel. • Sand Filters 294–H and 294–1H. • H-Canyon Supply Fan Interlock, for low Canyon Exhaust Air Tunnel vacuum. • Canyon Exhaust Fans and Fan Damper Air System. • 254–19H/292–H/292-2H Building Structure. • 254–19H DG System. **Safety Significant Systems:** • 291–H Stack and Stack Liner. **Technical Safety Requirements:** **LCOs:** • 3.3.1 H–Canyon Exhaust Ventilation System. • 3.3.3 Fan Damper Air System. • 3.4.1 254–19H DG. **Administrative Controls:** • (SAC) 5.7.2.11.d. Segregated Solvent Gamma Activity Limits shall not exceed the following limits: 1st Cycle 3.0E+8 d/m/ml; 2nd Product Cycle 1.0E+7 d/m/ml; and 2nd Uranium Cycle 2.0E+7 d/m/ml. • Emergency Response Program. • Fire Protection Program. • 5.7.2.19 Structural Integrity Program. **Design Features:** • Canyon Building and Exhaust System Design.

DF B.1.23, Fail–Safe Design of Canyon SC/SS Control Systems, although not specifically cited in the accident analysis, is considered a generic control that will prevent most accidents since the instruments are typically designed to fail in a safe manner.

Table 8.3–2 Summary Table of Controls for H–Canyon and Outside Facilities H–Area Dominant Accidents (Continued)

Scenario	Preventers	Mitigators
Fire – Wildland or Other External Fire (Section 8.3.2.3.4) (Scenario Class II)	**Safety Class Systems:** • None. **Safety Significant Systems:** • None. **Technical Safety Requirements:** **LCOs:** • None. **Administrative Controls:** • Fire Protection Program. • Configuration Control Program. **Design Features:** • None.	**Safety Class Systems:** • None. **Safety Significant Systems:** • None. **Technical Safety Requirements:** **LCOs:** • None. **Administrative Controls:** • Emergency Response Program. • Emergency Preparedness Program. **Design Features:** • None.

DF B.1.23, Fail–Safe Design of Canyon SC/SS Control Systems, although not specifically cited in the accident analysis, is considered a generic control that will prevent most accidents since the instruments are typically designed to fail in a safe manner.

Table 8.3–2 Summary Table of Controls for H–Canyon and Outside Facilities H–Area Dominant Accidents (Continued)

Scenario	Preventers	Mitigators
Inadvertent Criticality (Section 8.3.2.4) Inside the Canyon (Scenario Class I) Outside Facilities–H (Scenario Class II)	**Safety Class Systems:** • None. **Safety Significant Systems:** • Mark XII, HFIR, Ten–Well Dissolver Inserts with Positional Plugs and Mark XII Insert Spacers. • NSBs. • Neutron Monitors and Interlocks on Mixer Settlers 1A, 1B, 1C, 1D, and 1E. • Reactor Fuel Storage Racks. • Head End Strike Tank 10.2 Low Level Steam Cutoff Interlock. • Head End Strike Tank 10.2 High Temperature Interlock. • Head End Evaporator 11.3 Low Level Steam Cutoff Interlock. • Head End Evaporator 11.3E High Specific Gravity Interlock. • 1CU Evaporator 17.6E Low Level Interlock. • Evaporator 17.2E Low Level Interlock. • Minimum Level of Upper Heating Coil in Dissolvers 6.1D and 6.4D. • Dissolver 6.1D and Dissolver 6.4D Condenser Cooling Water Interlock. • 1CU and 1EU Uranium Analyzer Interlocks. • High Flow Alarm on the 1AF feed stream. • Low Flow Alarm on the 1AX feed stream. • High Temperature Alarms for the 1BS and 1BX feed streams. • Low Temperature Alarms for the 1BX and 1CX feed streams. • Canyon Section 13H Sump High Liquid Level Alarm. • 1CU Conductivity Meter and Interlock. • Canyon Pu Tank Liquid Level Instrumentation for Tanks 11.1, 12.1, 16.3, and 18.3. • Weir Pressure Interlock for the 1C Bank Mixer–Settler. • Jacketed Transfer Pipes for Fissile Material Transfer.	**Safety Class Systems:** • H-Canyon Building Structure. **Safety Significant Systems:** • NIM Alarm Systems. **Preventers - Safety Significant Systems (continued)** • Ten-Well Dissolver Insert (Super Kukla Metals) • Mk XII Dissolver Insert and Spacers (Pu/Be Metals) • Pu/Be Charging Bundle (Pu/Be Metals) • Pu/Be Outer Can (Pu/Be Metals)

Table 8.3–2 Summary Table of Controls for H–Canyon and Outside Facilities H–Area Dominant Accidents (Continued)

Scenario	Preventers	Mitigators
Inadvertent Criticality (Section 8.3.2.4) Inside the Canyon (Scenario Class I) Outside Facilities–H (Scenario Class II) (Continued)	**Technical Safety Requirements:** **LCOs:** • 3.1.5 Head End Strike Tank Instrumentation. • 3.1.6 Evaporator Level and Specific Gravity Instrumentation. • 3.1.7 Uranium Concentration and Neutron Monitor Instrumentation. • 3.1.10 Dissolver Condenser Cooling Water Instrumentation. • 3.1.14 Mixer–Settler Stream Flow Alarms. • 3.1.15 1CU Conductivity Meter Instrumentation. • 3.1.16 Canyon Section 13H Sump High Liquid Level Alarm. • 3.1.17 Mixer–Settler Flow Stream Temperature Alarms. • 3.1.18 Canyon Plutonium Tank Liquid Level Instrumentation. • 3.1.19 Weir Pressure Interlock for 1C Bank. **Administrative Controls:** • NCSP. DCA Program. • (SAC) 5.7.2.3.c Both the Project Manager and the Projects Chief Engineer shall approve either the installation or the removal of an NSB. • (SAC) 5.7.2.3.d A physical inspection shall be performed on each NSB at an interval not to exceed 10 years. This inspection shall include inspection of the barrier surface. If steam is applied directly to the NSB, the inspection interval shall be no greater than five years (see WSRC–TR–2003–00418). If other devices (e.g., valves or process blanks) block or prevent direct steam application to the NSB, the five year limit does not apply.	**Technical Safety Requirements:** **LCOs:** • 3.2.4 NIM Alarm Systems. **Administrative Controls:** • (SAC) 5.7.2.3.e. Facility modifications and activities that impact NIM coverage areas require compensatory measures as identified in the H–Canyon SAR Section 6.5.9.3 and TSR paragraph 5.7.2.3.f. • (SAC) 5.7.2.3.j. Prevent personnel access to the affected areas of the Section 15 Personnel Tunnel during Section 15H or 15W Sump flushing operations. • (SAC) 5.7.2.3.k. Prevent personnel access to the Section 5W Cell Cover areas during neutralization operations in Tank 9.8. • (SAC) 5.7.2.3.l. A Fire Curtain shall be in place between Sections 6W and 7W, and between Sections 7W and 8W when personnel are allowed to access the Section 5W Cell Cover areas. This AC is only required if a credible criticality scenario exists in Tanks 8.8, 9.5 or 9.6.

Table 8.3–2 Summary Table of Controls for H–Canyon and Outside Facilities H–Area Dominant Accidents (Continued)

Scenario	Preventers	Mitigators
Inadvertent Criticality (Section 8.3.2.4) Inside the Canyon (Scenario Class I) Outside Facilities–H (Scenario Class II) (Continued)	**Administrative Controls: (Continued)** • (SAC) 5.7.2.3.g Verify that no visible leaks exist in the First Cycle 1AX stream piping on the H–Canyon Second Level prior to initiation of hot feed. • (SAC) 5.7.2.3.h An inspection of the structural integrity of the Reactor Fuel Storage Racks being used with any fissile material shall be completed on an interval not to exceed 10 years. • (SAC) 5.7.2.3.i An inspection of the structural integrity of the Dissolver inserts shall be completed each time the inserts are inserted into the Dissolver.	**Administrative Controls: (Continued)** • (SAC) 5.7.2.3.m. Restrict personnel access to the Warm Canyon Crane Access Walkway and the Warm Crane Cab when the crane is in Sections 2W–18W as "Areas Not Normally Occupied," as defined in N–TRT–G–00001. Personnel who are granted access to these areas shall be equipped with alarming personnel dosimeters capable of quickly detecting and alarming to a nuclear criticality. • 5.7.2.19 Structural Integrity Program
	Design Features: • Reactor Fuel Storage Racks. • Minimum level of the upper heating coil in Dissolvers 6.1D and 6.4D. • Mark XII, HFIR, Ten – Well Dissolver Inserts with Positional Plugs and Mark XII Insert Spacers. • NSBs. • 1AS–FS Flow System. • Jacketed Transfer Pipes for Fissile Material Transfer. • LEU Measuring Tank E1–2 Geometrically Favorable Design, including insulation jacket drain hole. • LR 230 Shipping Container Geometrically Favorable Design. • Physical disconnect (e.g., air gap) on the steam line to the EUS Tank Heat Exchanger.	**Design Features:** • H-Canyon Building Structure.

DF B.1.23, Fail–Safe Design of Canyon SC/SS Control Systems, although not specifically cited in the accident analysis, is considered a generic control that will prevent most accidents since the instruments are typically designed to fail in a safe manner.

Table 8.3–2 Summary Table of Controls for H–Canyon and Outside Facilities H–Area Dominant Accidents (Continued)

Scenario	Preventers	Mitigators
Loss of Containment Transfer Error from Canyon to Outside Facilities (Liquid spills to ground) (Section 8.3.2.5.1) (Scenario Class II) **NOTE**: FWR operations are not authorized.	**Safety Class Systems:** • Exterior Waste Header Connection Legs and Concrete (Mummy) Casing. **Safety Significant Systems:** • None. **Technical Safety Requirements:** **LCOs:** • None. **Administrative Controls:** • (SAC) 5.7.2.10.b. All flexible jumper installation and all piping route changes shall require independent verification of correct installation. • Configuration Control Program. **Design Features:** • Exterior Waste Header Connection Legs and Concrete (Mummy) Casing.	**Safety Class Systems:** • F1-6 Basin. **Safety Significant Systems:** • B Basins (B1, B2, B3, and B4). **Technical Safety Requirements:** **LCOs:** • None. **Administrative Controls:** • Emergency Response Program. Spill Response Procedure. • Radiation Protection Program. • (SAC) 5.7.2.15.c When processing or storing Pu-238, limit the amount of Pu–238 in any single FWR process tank to less than or equal to 5.0 kg Pu–238. (Protects source term assumption in accident analysis.) **Design Features:** • B-Basins (B1, B2, B3, and B4). • F1-6 Basin

DF B.1.23, Fail–Safe Design of Canyon SC/SS Control Systems, although not specifically cited in the accident analysis, is considered a generic control that will prevent most accidents since the instruments are typically designed to fail in a safe manner.

Table 8.3–2 Summary Table of Controls for H–Canyon and Outside Facilities H–Area Dominant Accidents (Continued)

Scenario	Preventers	Mitigators
Loss of Containment Ruthenium Volatilization (Section 8.3.2.5.2) (Scenario Class III)	**Safety Class Systems:** • None. **Safety Significant Systems:** • None. **Technical Safety Requirements:** **LCOs:** • None. **Administrative Controls:** • None. **Design Features:** • None.	**Safety Class Systems:** • None. **Safety Significant Systems:** • None. **Technical Safety Requirements:** **LCOs:** • None. **Administrative Controls:** • (SAC) 5.7.2.10.i. For offsite reactor fuels processed, limit the Ru–106 to 136 Ci per Dissolver charge. **Design Features:** • None.

DF B.1.23, Fail–Safe Design of Canyon SC/SS Control Systems, although not specifically cited in the accident analysis, is considered a generic control that will prevent most accidents since the instruments are typically designed to fail in a safe manner.

Table 8.3–2 Summary Table of Controls for H–Canyon and Outside Facilities H–Area Dominant Accidents (Continued)

Scenario	Preventers	Mitigators
Loss of Containment Uncontrolled Reaction HAN – Nitric Acid (Section 8.3.2.5.3) (Scenario Class I)	**Safety Class Systems:** • None. **Safety Significant Systems:** • None. **Technical Safety Requirements:** **LCOs:** • None. **Administrative Controls:** • (SAC) 5.7.2.9.d. Prohibit the storage or use of HAN in H–Canyon or OF–H. **Design Features:** • None.	**Safety Class Systems:** • None. **Safety Significant Systems:** • None. **Technical Safety Requirements:** **LCOs:** • None. **Administrative Controls:** • None. **Design Features:** • None.

DF B.1.23, Fail–Safe Design of Canyon SC/SS Control Systems, although not specifically cited in the accident analysis, is considered a generic control that will prevent most accidents since the instruments are typically designed to fail in a safe manner.

Table 8.3–2 Summary Table of Controls for H–Canyon and Outside Facilities H–Area Dominant Accidents (Continued)

Scenario	Preventers	Mitigators
Loss of Containment Uncontrolled Reaction on 3rd Level (Section 8.3.2.5.4) (Scenario Class II)	**Safety Class Systems:** • None. **Safety Significant Systems:** • None. **Technical Safety Requirements:** **LCOs:** • None. **Administrative Controls:** • (SAC) 5.7.2.10.e. Valve lineups shall be independently verified for correctness for tanks with the potential for uncontrolled reactions. • (SAC) 5.7.2.10.h. Ferrous sulfamate piping changes shall ensure that this chemical cannot be inadvertently mixed with concentrated nitric acid in either the canyon Third Level or OF–H. • Configuration Control Program. **Design Features:** • None.	**Safety Class Systems:** • None. **Safety Significant Systems:** • None. **Technical Safety Requirements:** **LCOs:** • None. **Administrative Controls:** • Emergency Response Program. Spill Response Procedure. • Radiation Protection Program. **Design Features:** • None.

DF B.1.23, Fail–Safe Design of Canyon SC/SS Control Systems, although not specifically cited in the accident analysis, is considered a generic control that will prevent most accidents since the instruments are typically designed to fail in a safe manner.

Table 8.3–2 Summary Table of Controls for H–Canyon and Outside Facilities H–Area Dominant Accidents (Continued)

Scenario	Preventers	Mitigators
Loss of Containment Uncontrolled Reaction in Outside Facilities. (Section 8.3.2.5.5) (Scenario Class II)	**Safety Class Systems:** • None. **Safety Significant Systems:** • None. **Technical Safety Requirements:** **LCOs:** • None. **Administrative Controls:** • (SAC) 5.7.2.10.e. Valve lineups shall be independently verified for correctness for tanks with the potential for uncontrolled reactions. • (SAC) 5.7.2.10.h. Ferrous sulfamate piping changes shall ensure that this chemical cannot be inadvertently mixed with concentrated nitric acid in either the canyon Third Level or OF–H. • Configuration Control Program. **Design Features:** • OF–H Basins.	**Safety Class Systems:** • None. **Safety Significant Systems:** • None. **Technical Safety Requirements:** **LCOs:** • None. **Administrative Controls:** • (SAC) 5.7.2.10.f. Inspections of the structural integrity of the OF–H Basins and curbs shall be performed at least every 18 months. (600 Basins and Cold Chemical Storage Area Basins only.) • Emergency Response Program. Spill Response Procedure. **Design Features:** • None.

DF B.1.23, Fail–Safe Design of Canyon SC/SS Control Systems, although not specifically cited in the accident analysis, is considered a generic control that will prevent most accidents since the instruments are typically designed to fail in a safe manner.

Table 8.3–2 Summary Table of Controls for H–Canyon and Outside Facilities H–Area Dominant Accidents (Continued)

Scenario	Preventers	Mitigators
Loss of Containment: Release of Entire Contents of One or More Tanks in Bulk Chemical Storage or NU Loading/ Unloading or ARU in Outside Facilities (Section 8.3.2.5.6) (Scenario Class I)	**Safety Class Systems:** • None. **Safety Significant Systems:** • None. **Technical Safety Requirements:** **LCOs:** • None. **Administrative Controls:** • None. **Design Features:** • Vessel design – materials of construction.	**Safety Class Systems:** • None. **Safety Significant Systems:** • None. **Technical Safety Requirements:** **LCOs:** • None. **Administrative Controls:** • (SAC) 5.7.2.10.f. Inspections of the structural integrity of the OF–H Basins and curbs shall be performed at least every 18 months. (600 Basins and Cold Chemical Storage Area Basins only.) • Emergency Response Program. Spill Response Procedure. **Design Features:** • OF–H Basins. 600 Basins. Cold Chemical Storage Area Basins.

DF B.1.23, Fail–Safe Design of Canyon SC/SS Control Systems, although not specifically cited in the accident analysis, is considered a generic control that will prevent most accidents since the instruments are typically designed to fail in a safe manner.

Table 8.3–2 Summary Table of Controls for H–Canyon and Outside Facilities H–Area Dominant Accidents (Continued)

Scenario	Preventers	Mitigators
Sample Aisle Internal Exposure (Section 8.3.2.6.1) (Scenario Class I)	**Safety Class Systems:** • None. **Safety Significant Systems:** • Sampler Needle Shrouds. • Sampler Doorstops. **Technical Safety Requirements:** **LCOs:** • None. **Administrative Controls:** • (SAC) 5.7.2.14.b. A shroud shall be present that extends below the tip of the sample needle or a doorstop shall be used when taking the sample. • (SAC) 5.7.2.14.c. Leather gloves and protective equipment shall be used when working near an unprotected needle. • (SAC) 5.7.2.14.d. H–Canyon sampling procedures shall provide instructions on how to obtain a sample. • Radiation Protection Program. **Design Features:** • None.	**Safety Class Systems:** • None. **Safety Significant Systems:** • None. **Technical Safety Requirements:** **LCOs:** • None. **Administrative Controls:** • Radiation Protection Program. **Design Features:** • None.

DF B.1.23, Fail–Safe Design of Canyon SC/SS Control Systems, although not specifically cited in the accident analysis, is considered a generic control that will prevent most accidents since the instruments are typically designed to fail in a safe manner.

Table 8.3–2 Summary Table of Controls for H–Canyon and Outside Facilities H–Area Dominant Accidents (Continued)

Scenario	Preventers	Mitigators
Inadvertent Personnel Radiation Exposure in the GVC Due to a Suckback—Radioactive Material contained in Gang Valve Piping (Section 8.3.2.6.2) (Scenario Class I)	**Safety Class Systems:** • None. **Safety Significant Systems:** • None. **Technical Safety Requirements:** **LCOs:** • None. **Administrative Controls:** • (SAC) 5.7.2.14.a. When processing irradiated fuel, the gang valves shall be in the air blow position to allow process airflow to continue for 5 minutes after completing any steam jet solution transfer. **Design Features:** • None.	**Safety Class Systems:** • None. **Safety Significant Systems:** • None. **Technical Safety Requirements:** **LCOs:** • None. **Administrative Controls:** • Radiation Protection Program. • (SAC) 5.7.2.14.i. When taking samples or transferring materials when processing irradiated fuel with the potential for severe exposure in the event of a significant radiological material release (i.e., dissolved raw material, Head End, First Cycle feed and waste, and HAW evaporation and neutralization solutions), personnel entering the HGVC or taking samples in the Hot Sample Aisle shall be required to either wear audible dosimetry or be accompanied by RCO personnel. • (SAC) 5.7.2.14.j. When processing irradiated fuel, unaccompanied access to the HGVC WGVC, or the Sample Aisles shall be limited to properly trained and qualified personnel. **Design Features:** • None.

DF B.1.23, Fail–Safe Design of Canyon SC/SS Control Systems, although not specifically cited in the accident analysis, is considered a generic control that will prevent most accidents since the instruments are typically designed to fail in a safe manner.

Table 8.3–2 Summary Table of Controls for H–Canyon and Outside Facilities H–Area Dominant Accidents (Continued)

Scenario	Preventers	Mitigators
Inadvertent Personnel Radiation Exposure in the GVC or Sample Aisle Due to a Liquid Radioactive Material Release inside the GVC or Sample Aisle (Section 8.3.2.6.3) (Scenario Class I)	**Safety Class Systems:** • None. **Safety Significant Systems:** • None. **Technical Safety Requirements:** **LCOs:** • None. **Administrative Controls:** • (SAC) 5.7.2.14.a. When processing irradiated fuel, the gang valves shall be in the air blow position to allow process air flow to continue for 5 minutes after completing any steam jet solution transfer. **Design Features:** • None.	**Safety Class Systems:** • None. **Safety Significant Systems:** • None. **Technical Safety Requirements:** **LCOs:** • None. **Administrative Controls:** • Radiation Protection Program. • (SAC) 5.7.2.14.i. When taking samples or transferring materials when processing irradiated fuel with the potential for severe exposure in the event of a significant radiological material release (i.e., dissolved raw material, Head End, First Cycle feed and waste, and HAW evaporation and neutralization solutions), personnel entering the HGVC or taking samples in the Hot Sample Aisle shall be required to either wear audible dosimetry or be accompanied by RCO personnel. • (SAC) 5.7.2.14.j. When processing irradiated fuel, unaccompanied access to the HGVC WGVC, or the Sample Aisles shall be limited to properly trained and qualified personnel. **Design Features:** • None.

DF B.1.23, Fail–Safe Design of Canyon SC/SS Control Systems, although not specifically cited in the accident analysis, is considered a generic control that will prevent most accidents since the instruments are typically designed to fail in a safe manner.

Table 8.3–2 Summary Table of Controls for H–Canyon and Outside Facilities H–Area Dominant Accidents (Continued)

Scenario	Preventers	Mitigators
Inadvertent Personnel Radiation Exposure in the Hot Canyon from Fuel Handling Operations in the Railroad Tunnel (Section 8.3.2.6.4) (Scenario Class I)	**Safety Class Systems:** • None. **Safety Significant Systems:** • Railroad Tunnel Shielding Door Permission Switch. • Hot Crane Maintenance Area Shielding Door Permission Switch. **Technical Safety Requirements:** **LCOs:** • None. **Administrative Controls:** • Procedures Program. • Radiation Protection Program. • (SAC) 5.7.2.14.e. The Permission Switches shall prevent the Railroad Tunnel and Hot Crane Maintenance Area Shielding Doors from opening when irradiated fuel transfer operations are being conducted in the Railroad Tunnel. The switches shall be tested for proper operation every 18 Months. • (SAC) 5.7.2.14.f. When irradiated fuel bundles are being handled by the crane, the SOM shall maintain positive control of the key for the Railroad Tunnel and Hot Crane Maintenance Area Shielding Door Permission Switches. • (SAC) 5.7.2.14.g. When irradiated fuel bundles are being handled by the crane, personnel access to the Railroad Tunnel Airlock, Hot Crane Maintenance Area, Hot Canyon Shop, and Swimming Pool Decontamination Facility shall be restricted to personnel required for fuel handling operations. **Design Features:** • None.	**Safety Class Systems:** • None. **Safety Significant Systems:** • None. **Technical Safety Requirements:** **LCOs:** • None. **Administrative Controls:** • Radiation Protection Program. • (SAC) 5.7.2.14.h. When irradiated fuel bundles are being handled by the crane, personnel required to be in the Railroad Tunnel Airlock and the Hot Crane Maintenance Area shall either wear audible dosimetry or be accompanied by RCO personnel. **Design Features:** • H-Canyon Building Structure.

DF B.1.23, Fail–Safe Design of Canyon SC/SS Control Systems, although not specifically cited in the accident analysis, is considered a generic control that will prevent most accidents since the instruments are typically designed to fail in a safe manner.

Table 8.3–2 Summary Table of Controls for H–Canyon and Outside Facilities H–Area Dominant Accidents (Continued)

Scenario	Preventers	Mitigators
Inadvertent Personnel Radiation Exposure in the Clean Areas of the Canyon—Liquid Radioactive Material Released inside the 1st Level or the Personnel Tunnel (Section 8.3.2.6.5) (Scenario Class I)	**Safety Class Systems:** • None. **Safety Significant Systems:** • None. **Technical Safety Requirements:** **LCOs:** • None. **Administrative Controls:** • None. **Design Features:** • H-Canyon Building Structure design.	**Safety Class Systems:** • None. **Safety Significant Systems:** • None. **Technical Safety Requirements:** **LCOs:** • None. **Administrative Controls:** • Emergency Response Program. Spill Response Procedure. • Radiation Protection Program. **Design Features:** • None.

DF B.1.23, Fail–Safe Design of Canyon SC/SS Control Systems, although not specifically cited in the accident analysis, is considered a generic control that will prevent most accidents since the instruments are typically designed to fail in a safe manner.

Table 8.3–2 Summary Table of Controls for H–Canyon and Outside Facilities H–Area Dominant Accidents (Continued)

Scenario	Preventers	Mitigators
External Impact Event: Aircraft (Helicopter) Crash or Vehicle Impact OF-H Process (Section 8.3.2.7) (Scenario Class II)	**Safety Class Systems:** • None. **Safety Significant Systems:** • None. **Technical Safety Requirements:** **LCOs:** • None. **Administrative Controls:** • None. **Design Features:** • OF–H Basins. 600 Basins. Cold Chemical Storage Area Basins.	**Safety Class Systems:** • H-Canyon Building Structure. **Safety Significant Systems:** • None. **Technical Safety Requirements:** **LCOs:** • None. **Administrative Controls:** • Emergency Response Program (Fire/Spill Response Procedure). • Radiation Protection Program. • 5.7.2.19 Structural Integrity Program. **Design Features:** • OF–H Basins. • 600 Basins. • Cold Chemical Storage Area Basins. • H-Canyon Building Structure.

DF B.1.23, Fail–Safe Design of Canyon SC/SS Control Systems, although not specifically cited in the accident analysis, is considered a generic control that will prevent most accidents since the instruments are typically designed to fail in a safe manner.

Table 8.3–2 Summary Table of Controls for H–Canyon and Outside Facilities H–Area Dominant Accidents (Continued)

Scenario	Preventers	Mitigators
Natural Phenomena Event: Earthquake, Straight Winds or Tornado, H–Canyon Process (Section 8.3.2.8) (Scenario Class I)	**Safety Class Systems:** • None.	**Safety Class Systems:** • H-Canyon Building Structure. • H-Canyon Exhaust Air Tunnel. • Sand Filters 294–H and 294–1H. • H-Canyon Supply Fan Interlock, for low Canyon Exhaust Air Tunnel vacuum. • Canyon Exhaust Fans and Fan Damper Air System. • 254–19H/292–H/292-2H Building Structure. • 254–19H DG System.
	Safety Significant Systems: • None.	**Safety Significant Systems:** • Reactor Fuel Storage Racks. • 291–H Stack and Stack Liner.
	Technical Safety Requirements: **LCOs:** • None.	**Technical Safety Requirements:** **LCOs:** • 3.3.1 H–Canyon Ventilation Exhaust. • 3.3.3 Fan Damper Air System. • 3.4.1 254–19H DG.
	Administrative Controls: • None.	**Administrative Controls:** • Emergency Response Program, Spill Response Procedures. • 5.7.2.19 Structural Integrity Program.
	Design Features: • None.	**Design Features:** • Design of building, vessels, and electrical system to include the jumpers. • Design and Installation Features of the Canyon Vessels (strength) that prevent them from overturning during an earthquake. • Reactor Fuel Storage Racks. • Canyon Building and Exhaust System Design.

DF B.1.23, Fail–Safe Design of Canyon SC/SS Control Systems, although not specifically cited in the accident analysis, is considered a generic control that will prevent most accidents since the instruments are typically designed to fail in a safe manner.

Table 8.3–2 Summary Table of Controls for H–Canyon and Outside Facilities H–Area Dominant Accidents (Continued)

Scenario	Preventers	Mitigators
Natural Phenomena Event: Earthquake, Straight Winds or Tornado OF-H Process (Section 8.3.2.8) (Scenario Class I)	**Safety Class Systems:** • None. **Safety Significant Systems:** • None. **Technical Safety Requirements:** **LCOs:** • None. **Administrative Controls:** • None. **Design Features:** • None.	**Safety Class Systems:** • None. **Safety Significant Systems:** • None. **Technical Safety Requirements:** **LCOs:** • None. **Administrative Controls:** • Emergency Response Program. Spill Response Procedure. • (SAC) 5.7.2.11.d. Segregated Solvent Gamma Activity Limits shall not exceed the following limits: 1st Cycle 3.0E+8 d/m/ml; 2nd Product Cycle 1.0E+7 d/m/ml; and 2nd Uranium Cycle 2.0E+7 d/m/ml. • 5.7.2.19 Structural Integrity Program. **Design Features:** • EUS Tank Design. • OF–H Basins. 600 Basins. Cold Chemical Storage Area Basins.

DF B.1.23, Fail–Safe Design of Canyon SC/SS Control Systems, although not specifically cited in the accident analysis, is considered a generic control that will prevent most accidents since the instruments are typically designed to fail in a safe manner.

Table 8.3–2 Summary Table of Controls for H–Canyon and Outside Facilities H–Area Dominant Accidents (Continued)

Scenario	Preventers	Mitigators
Release from the Abandoned OHBL Exhaust Duct Leak (Section 8.3.3) (Scenario Class N/A)	**Safety Class Systems:** • None. **Safety Significant Systems:** • None. **Technical Safety Requirements:** **LCOs:** • None. **Administrative Controls:** • Fire Protection Program. Combustible Loading. • 5.7.2.19 Structural Integrity Program. **Design Features:** • None.	**Safety Class Systems:** • None. **Safety Significant Systems:** • None. **Technical Safety Requirements:** **LCOs:** • None. **Administrative Controls:** • None. **Design Features:** • None.

DF B.1.23, Fail–Safe Design of Canyon SC/SS Control Systems, although not specifically cited in the accident analysis, is considered a generic control that will prevent most accidents since the instruments are typically designed to fail in a safe manner.

Table 8.3–2 Summary Table of Controls for H–Canyon and Outside Facilities H–Area Dominant Accidents (Continued)

Scenario	Preventers	Mitigators
Support for Other Facility SB (Section 8.6) (Scenario Class N/A)	**Safety Class Systems:** • None. **Safety Significant Systems:** • None. **Technical Safety Requirements:** **LCOs:** • None. **Administrative Controls:** • 5.7.2.17 When necessary, H–Canyon will ensure activities necessary to protect another FACILITY's SB are implemented, even if the activity is not required to protect the H–Canyon SB. Requirements that protect another FACILITY SB will be implemented in H–Canyon in a manner consistent with methods used to implement H–Canyon SB requirements. In these cases, the FACILITY protected by H–Canyon activities shall identify the appropriate SB and/or process control limits to H–Canyon. **Design Features:** • None.	**Safety Class Systems:** • None. **Safety Significant Systems:** • None. **Technical Safety Requirements:** **LCOs:** • None. **Administrative Controls:** • None. **Design Features:** • None.

DF B.1.23, Fail–Safe Design of Canyon SC/SS Control Systems, although not specifically cited in the accident analysis, is considered a generic control that will prevent most accidents since the instruments are typically designed to fail in a safe manner.

Table 8.3–2 Summary Table of Controls for H–Canyon and Outside Facilities H–Area Dominant Accidents (Continued)

Scenario	Preventers	Mitigators
Waste Repackaging (Section 8.3.4) (Scenario Class B)	**Safety Class Systems:** • None. **Safety Significant Systems:** • None. **Technical Safety Requirements:** **LCOs:** • None. **Administrative Controls:** • Radiation Protection Program. • Hoisting and Rigging Program • (SAC) 5.7.2.12.f Prior to beginning the Repackaging activities or movement to lag storage, verify that the received LSB has at least one filter vent installed. • (SAC) 5.7.2.12.g Prior to closure of a SLB after the Repackaging activities, verify that the SLB has at least one filter vent installed. • (SAC) 5.7.2.12.h Only LSBs that have sample data to verify that the headspace is less than 10% of the LEL will be accepted at H-Canyon. **Design Features:** • None.	**Safety Class Systems:** • None. **Safety Significant Systems:** • 221–H-Canyon Building Structure. • 221–H-Canyon Exhaust Air Tunnel. • Sand Filters 294–H and 294–1H. • 221–H-Canyon Supply Fan Interlock, for low Canyon Exhaust Air Tunnel vacuum. • Canyon Exhaust Fans and Fan Damper Air System. • 254–19H/292–H/292-2H Building Structure. • 254–19H DG System. • 291–H Stack and Stack Liner. **Administrative Controls:** • Emergency Response Program. • Radiation Protection Program. **Design Features:** • None.

8.4 SAFETY CLASS AND SAFETY SIGNIFICANT DESCRIPTION APPROACH

8.4.1. BACKGROUND

CBU identified the H–Canyon SC and SS SSCs. These SSCs were identified according to the guidance in the WSRC Procedure Manual E7 (Ref. 14) Procedure 2.25 Functional Classification. The guidance in Reference 14 and the safety analysis defined controls were used to develop the H–Canyon SC and SS Functional Classification List contained in WSRC–TR–2001–00038 (Ref. 82).

8.4.2. INTEGRATION OF FUNCTIONAL CLASSIFICATION AND FACILITY SAFETY BASES

The H-Canyon SC and SS systems have been designated in the FCR (Ref. 82). Since the lists of the SC and SS SSCs and attributes are included in this SAR, which is part of the SB, the USQ process will be used to ensure that changes to the SC/SS system listing do not adversely affect the facility safety envelope. Proposed activities or discoveries that identify the need for a system to be added to the SC or SS list for these facilities will be reviewed through a USQ Screening/Evaluation. The results of each Screening/Evaluation will be managed as follows:

- If a USQ does not exist, the new system will be added to the DSA/TSR as soon as practical.
- If a USQ exists for a proposed activity that has not been implemented, the DSA/TSR will be revised prior to beginning the activity.
- If a USQ exists for an activity that is already part of facility operation, the situation will be reported to DOE, and the applicable WSRC Procedure Manual 11Q procedures will be followed (Ref. 15).
- The SC and SS lists will be consistent with the DOE approved facility DSA/TSR.

8.4.3. DESIGNATION OF SAFETY CLASS AND SAFETY SIGNIFICANT SYSTEMS FOR H–CANYON AND OUTSIDE FACILITIES H–AREA

Tables that define the SC and SS SSCs for H–Canyon and OF–H are included in this section. Additionally, the tables indicate during which process operation the SSC is considered to be SC or SS. Table 8.4–1 identifies the SC SSCs while Table 8.4–2 identifies the SS SSCs. Both tables indicate the TSR LCO or AC for the SSC. Table 8.4–3 lists the DFs, and Table 8.4–4 lists the ACs referenced in this SAR. These tables identify the SRs, if a SR is applicable to the DF or AC.

The information in the tables is the basis for the functional classification list in Reference 82.

8.4.4. SURVEILLANCE REQUIREMENTS

Any surveillances associated with the H–Canyon FWR Process shall not be required to be completed until any future restart of this process. This restriction applies strictly to any surveillances required solely for FWR operations.

Tables 8.4–1 and 8.4–2 reference the appropriate TSR AC, DF, or LCO for the H–Canyon and OF–H SC and SS systems. A tracking system (typically a database) is used to control the surveillances to ensure the required surveillances are completed before the surveillance interval expires.

DOE Guide 423.1–1, Implementation Guide for Use in Developing TSRs (Ref. 84), provides guidance on the application of surveillances to designated safety equipment used to protect the DSA. This section states that application of the surveillances shall follow four basic rules. The second rule states: "Each SR shall be performed within the specified interval, with a maximum extension of 25 percent of the interval between any two consecutive surveillances. (This extension is intended to provide operational flexibility both for scheduling and for performing surveillances. It should not be relied upon as a routine extension of the specified interval.)" The 25% grace period, described in the TSR (Section SR 4.0.2), is applicable to the SAR and DCA SRs, as well as the TSR SRs.

8.4.5 SPECIFIC ADMINISTRATIVE CONTROL BASIS

8.4.5.1 Large Steel Box Verifications (TSR 5.7.2.12.f)

Prior to beginning the Repackaging activities or movement to lag storage, verify that the received LSB has at least one filter vent installed.

8.4.5.1.1 SAFETY FUNCTION

This AC is designated as an SAC because it provides a SS safety function that cannot be performed by an engineered safety system. This SAC protects an assumption made in the CHA for the Repackaging of Waste Stored in LSBs into SLBs in H-Canyon. The CHA assumes that a deflagration in a LSB is an incredible event since the VOCs and hydrogen that may form in the headspace escape through one or more vents in the container such that the LFL of the gases is not exceeded. The safety function of this SAC is: To ensure that all received LSBs have at least one filter vent installed prior to beginning the Repackaging Process or moving it to lag storage to prevent a flammable gas concentration that exceeds the LFL. Performance of this safety function prevents an unanalyzed condition (see CHA events BB1-5 and BB2-3).

8.4.5.1.2 SPECIFIC ADMINISTRATIVE CONTROL DESCRIPTION

The accident analysis does not postulate a deflagration in a LSB due to the accumulation of VOCs and hydrogen in the container because it is assumed that all LSBs have at least one filter

vent installed. To protect that assumption, all received LSBs must have at least one filter vent installed to prevent a flammable gas concentration that exceeds the LFL. Filter vents authorized for use in the LSBs have a minimum hydrogen diffusivity of 1.65E-04 moles/second/mole fraction (Ref. 138). Administrative controls shall be in place to ensure that all received LSBs have at least one filter vent installed prior to beginning the Repackaging Process or movement to lag storage to prevent a flammable gas concentration that exceeds the LFL.

8.4.5.1.3 FUNCTIONAL REQUIREMENTS

The functional requirements for this SAC are to ensure that LSBs received for repackaging have at least one filter vent installed to prevent a flammable gas concentration that exceeds the LFL. This verification must be completed prior to beginning the Repackaging Process or movement to lag storage. Written procedures must be provided to ensure these verifications are performed.

8.4.5.1.4 SPECIFIC ADMINISTRATIVE CONTROL EVALUATION

The LSB verification described in section 8.4.4.1.2 is implemented by written procedures to ensure the reliability of this SAC. All received LSBs must have at least one filter vent installed to prevent a flammable gas concentration that exceeds the LFL. Based on the minimum hydrogen diffusivity through the filter vents, one filter vent is sufficient to remove the hydrogen generated by 2400 PEC (Ref. 143). Because the LSBs have at least one installed filter vent and are limited to a maximum of 1600 PEC, which is two thirds of the amount analyzed, the accumulation of sufficient hydrogen to exceed the LFL in a LSB is not a credible hazard. Also, the natural “breathing” of the container, due to local temperature and pressure changes dilutes any VOCs present such that the LFL is not exceeded.

Because of the expected short time the LSB and SLB will be in H-Area, including lag storage time, there is no potential for a flammable atmosphere to develop in the LSB/SLBs while they are in H-Area. Therefore, there is no requirement for a periodic inspection of the filter vents.

8.4.5.2 Standard Large Box Verification (TSR 5.7.2.12.g)

Prior to closure of a SLB after the Repackaging activities, verify that the SLB has at least one filter vent installed.

8.4.5.2.1 SAFETY FUNCTION

This AC is designated as an SAC because it provides a SS safety function that cannot be performed by an engineered safety system. This SAC protects an assumption made in the CHA for the Repackaging of Waste Stored in LSBs into SLBs in H-Canyon. The CHA assumes that a deflagration in a SLB is an incredible event since the VOCs and hydrogen that may form in the headspace escape through one or more vents in the container such that the LFL of the gases is not exceeded. The safety function of this SAC is: To ensure that all repackaged SLBs have at least one filter vent installed prior to closure of the SLB after the Repackaging Process to prevent

a flammable gas concentration that exceeds the LFL. Performance of this safety function prevents an unanalyzed condition (see CHA events BB2-3, and BB7-4).

8.4.5.2.2 SPECIFIC ADMINISTRATIVE CONTROL DESCRIPTION

The accident analysis does not postulate a deflagration in a SLB due to the accumulation of VOCs and hydrogen in the container because it is assumed that all SLBs have at least one filter vent installed. To protect that assumption, all repackaged SLBs must have at least one filter vent installed to prevent a flammable gas concentration that exceeds the LFL. Filter vents authorized for use in the SLBs have a minimum hydrogen diffusivity of 1.65E-04 moles/second/mole fraction (Ref. 143). Administrative controls shall be in place to ensure that all repackaged SLBs have at least one filter vent installed prior to closure of the SLB after the Repackaging Process to prevent a flammable gas concentration that exceeds the LFL.

8.4.5.2.3 FUNCTIONAL REQUIREMENTS

The functional requirement for this SAC is to ensure that all repackaged SLBs have at least one filter vent installed to prevent a flammable gas concentration that exceeds the LFL. This verification must be completed prior to closure of the SLB after the Repackaging Process. Written procedures must be provided to ensure these verifications are performed.

8.4.5.2.4 SPECIFIC ADMINISTRATIVE CONTROL EVALUATION

The SLB Filter Vent Verification described in section 8.4.4.2.2 is implemented by written procedures to ensure the reliability of this SAC. All repackaged SLBs must have at least one filter vent installed to prevent a flammable gas concentration that exceeds the LFL. Based on the minimum hydrogen diffusivity through the filter vents, it has been has demonstrated that one filter vent is sufficient to remove the hydrogen generated by 2400 PEC (Ref. 143). Because the SLBs have at least one installed filter vent and are limited to a maximum of 800 PEC based on meeting SWMF acceptance criteria, which is one third of the amount analyzed, the accumulation of sufficient hydrogen to exceed the LFL in a SLB is not a credible hazard. Also, the natural "breathing" of the container, due to local temperature and pressure changes dilutes any VOCs present such that the LFL is not exceeded.

Because of the expected short time the LSB and SLB will be in H-Area, including lag storage time, there is no potential for a flammable atmosphere to develop in the LSB/SLBs while they are in H-Area. Therefore, there is no requirement for a periodic inspection of the filter vents.

8.4.5.3 Large Steel Box Verifications (TSR 5.7.2.12.h)

Only LSBs that have sample data to verify that the headspace is less than 10% of the LEL will be accepted at H-Canyon.

8.4.5.3.1 SAFETY FUNCTION

This AC is designated as an SAC because it provides a SS safety function that cannot be performed by an engineered safety system. This SAC protects an assumption made in the CHA for the Repackaging of Waste Stored in LSBs into SLBs in H-Canyon. Verification by H-Canyon that LSBs shipped from SWMF have sample data that demonstrates that the headspace is less than 10% of the LEL helps ensure that the LEL of VOCs is not exceeded. The safety function of this SAC is: To ensure that all LSBs accepted by H-Canyon have sample data that verifies that the headspace of the LSB is less than 10% of the LEL. Performance of this safety function prevents an unanalyzed condition (see CHA events BB1-5 and BB2-3).

8.4.5.3.2 SPECIFIC ADMINISTRATIVE CONTROL DESCRIPTION

The accident analysis does not postulate a deflagration in a LSB due to the accumulation of VOCs and hydrogen in the container because it is assumed that along with the installed filter vents discussed above, that the LSBs are also verified to have headspaces less than 10% of the LEL prior to being accepted by H-Canyon. To protect this assumption, all received LSBs must have sample data available that demonstrates the headspace is less than 10% LEL. Administrative controls shall be in place to ensure that all received LSBs have sample data that demonstrates a headspace less than 10% of the LEL prior to accepting the LSB to ensure flammable gas concentration do not exceed the LEL.

8.4.5.3.3 FUNCTIONAL REQUIREMENTS

The functional requirements for this SAC are to ensure that LSBs received for repackaging have sample data available that indicates a headspace less than 10% LEL. This verification must be completed prior to receiving the LSB from SWMF. Written procedures must be provided to ensure these verifications are performed.

8.4.5.3.4 SPECIFIC ADMINISTRATIVE CONTROL EVALUATION

The LSB verification described in section 8.4.4.3.2 is implemented by written procedures to ensure the reliability of this SAC. All received LSBs must have sample data that indicates the headspace is less than 10% LEL. As discussed above, because of the expected short time the LSBs will be in H-Area, including lag storage time, there is no potential for a flammable atmosphere to develop in the LSBs while they are in H-Area. Therefore, there is no requirement for a periodic headspace sample for flammability.

8.4.5.4 Nuclear Criticality Safety Program - Inadvertent Criticality Mitigation (TSR 5.7.2.3.c)

Both the Project Manager and the Projects Chief Engineer shall approve installation or removal of a Nuclear Safety Blank (NSB).

8.4.5.4.1 SAFETY FUNCTION

This AC is designated as an SAC because it serves an SS safety function that cannot be performed by an engineered safety system. The NSBs are passive design features installed in certain process lines to ensure that the conditions necessary for a nuclear criticality event cannot occur. The NSBs are installed in locations designated in the DCA. To ensure that the blanks are properly specified and not inadvertently removed as part of routine operations, this SAC requires specific management review and approval of any NSB removal or installation. This SS safety function minimizes the potential for inadvertent installation or removal of the NSBs (DSA Section 8.3.2.4).

8.4.5.4.2 SPECIFIC ADMINISTRATIVE CONTROL DESCRIPTION

Fissile material solutions are processed in H–Canyon and OF–H. The DCA identifies controls to prevent an inadvertent criticality in the H–Canyon and OF–H processes. One of the credited controls to prevent a criticality is the installation of the NSBs on designated process or cold chemical feed lines. One example is blanks on those lines where caustic solutions could be introduced to fissile solutions. This may lead to precipitation of the fissile material, creating conditions favorable for an inadvertent criticality.

8.4.5.4.3 FUNCTIONAL REQUIREMENTS

The requirement is to ensure that the NSBs are not added to or removed from H–Canyon and OF–H without the appropriate management review and approval. The functional requirement is to provide a positive mechanism to ensure the installation and removal of NSBs are controlled and approved by the appropriate management levels. The inspections shall ensure the NSBs are installed or removed in such a manner that the NSBs are capable of meeting their credited safety function of preventing a criticality event in H–Canyon or OF–H.

8.4.5.4.4 SPECIFIC ADMINISTRATIVE CONTROL EVALUATION

This SAC provides a positive mechanism to ensure the NSBs remain installed in the locations credited in the DCA. This SAC along with SAC 5.7.2.3.d is effective in preventing or minimizing the potential for an inadvertent criticality in H–Canyon and OF–H.

8.4.5.5 Nuclear Criticality Safety Program - Inadvertent Criticality Mitigation (TSR 5.7.2.3.d)

A physical inspection shall be performed on each NSB at an interval not to exceed 10 years. This inspection shall include an inspection of the barrier surface. If steam is applied directly to the NSB, the inspection interval shall be no greater than five years (see WSRC–TR–2003–00418). If other devices (e.g., valves or process blanks) block or prevent direct steam application to the NSB, the five-year limit does not apply.

8.4.5.5.1 SAFETY FUNCTION

This AC is designated as an SAC because it serves an SS safety function that cannot be performed by an engineered safety system. The NSBs are passive design features installed in certain process lines to ensure that the conditions necessary for a nuclear criticality event cannot occur. The NSBs are installed in locations designated in the DCA. Typically, the NSBs are or have been installed in these locations for an extended period. Because of the corrosive environment to which these NSBs are exposed, the NSBs must be inspected and/or replaced on a periodic frequency to ensure the passive blanks are capable of their credited safety function. This SS safety function ensures that the blanks will minimize the potential for an inadvertent criticality in H–Canyon and OF–H (DSA Section 8.3.2.4).

8.4.5.5.2 SPECIFIC ADMINISTRATIVE CONTROL DESCRIPTION

Fissile material solutions are processed in H–Canyon and OF–H. The DCA identifies controls to prevent an inadvertent criticality in the H–Canyon and OF–H processes. One of the credited controls to prevent a criticality is the installation of the NSBs on designated process or cold chemical feed lines. One example is blanks on those lines where caustic solutions could be introduced to fissile solutions. This may lead to precipitation of the fissile material, creating conditions favorable for an inadvertent criticality. The SAC requires an inspection of the blanks to ensure the blanks are properly installed and that the blanks are structurally sound so that they block the flow of liquids or steam through the lines on which they are installed.

8.4.5.5.3 FUNCTIONAL REQUIREMENTS

The requirement is to ensure that the NSBs are in place and are capable of meeting their intended and credited safety function by ensuring the NSBs do not leak or have other failures that could impact their safety function. The functional requirement is to provide an inspection of the NSBs. As noted in the SAC, the inspections shall not exceed a period of 10 years if steam is not applied directly to the NSBs. If steam is applied to the NSBs, the inspection shall not exceed a period of 5 years. In both cases the inspection is to include an inspection of the barrier surface for damage (e.g., corrosion, pitting, other damage). The inspection periods are based on technical reports from SRNL and engineering judgment and are based on the service to which the blank is subject. The inspections shall ensure the NSBs are capable of meeting their credited safety function or are replaced with a new NSB as necessary.

8.4.5.5.4 SPECIFIC ADMINISTRATIVE CONTROL EVALUATION

This SAC ensures that the NSBs are capable of performing their credited safety function to prevent a criticality. By preventing an inadvertent criticality, a potential personnel exposure to ionizing radiation is prevented. This SAC along with SAC 5.7.2.3.c, is effective in preventing or minimizing the potential for an inadvertent criticality in H–Canyon and OF–H.

8.4.5.6 Nuclear Criticality Safety Program - Inadvertent Criticality Mitigation (TSR 5.7.2.3.e)

Facility modifications and activities that impact NIM coverage areas require compensatory measures as identified in the H-Canyon SAR Section 6.5.9.3. and TSR paragraph 5.7.2.3.f.

8.4.5.6.1 SAFETY FUNCTION

This AC is designated as an SAC because it serves an SS safety function that cannot be performed by an engineered safety system. There are no SSCs that can ensure that activities or modifications in the facility do not impact the NIM coverage areas. The NIMs are a credited SSC that automatically alarm if a criticality in their coverage area occurs. The purpose of the NIM is to alert personnel to evacuate the area as rapidly as possible or to remain outside the area in which the criticality has occurred. By ensuring personnel evacuate or remain outside the area, the NIMs mitigate the potential consequences of a criticality event to the facility worker. Experience has shown that some activities that generate a lot of noise (e.g., CAMs) or modifications to the facility may reduce or eliminate the area in which the NIM signal can be seen or heard. Because many of the activities that can impact the effective NIM alarm coverage area (e.g., visual or audible signals) cannot be altered to ensure that effective NIM coverage can be maintained, compensatory measures must be instituted to ensure personnel in the affected area can be immediately alerted if a NIM alarms in that area. The referenced SAR and TSR sections give some, but not necessarily all, good examples of compensatory measures to provide adequate protection to alert personnel if a NIM occurs. This SAC requires the establishment of compensatory measures. This SAC ensures that the mitigative function provided by the NIMs are maintained for all personnel in the area (Section 8.3.2.4).

8.4.5.6.2 SPECIFIC ADMINISTRATIVE CONTROL DESCRIPTION

If an inadvertent criticality occurs in H–Canyon, personnel, primarily the facility operators, could be exposed to extremely high levels of ionizing radiation. This is particularly true if personnel are unaware of the criticality and remain in the area where subsequent criticality bursts will increase personnel exposure to the ionizing radiation. The purpose of the NIMs (LCO 3.2.4) is to detect the first burst in a criticality event and automatically alarm to alert personnel to evacuate or not enter the affected area. If the NIM alarm cannot be seen or heard, it is ineffective in providing its credited mitigative safety function. Because necessary conditions may arise that cause the NIM alarm coverage area to be reduced or the alarms to be ineffective, this SAC was developed to require the implementation of the appropriate compensatory measure to ensure personnel exposure to ionizing radiation is minimized. Most of the compensatory measures developed under this SAC are expected to be administrative efforts to detect an alarming NIM and alert other personnel who cannot see or hear the NIM alarm. This control is designated as a TSR SAC because it is a primary control in mitigating the consequences of a criticality if the NIM alarm cannot be seen or heard. A criticality in selected locations in H–Canyon or OF–H could present a significant radiological exposure hazard to the facility worker.

8.4.5.6.3 FUNCTIONAL REQUIREMENTS

The requirement is to ensure the effectiveness of the NIM alarms in alerting personnel to evacuate or not enter an area where an inadvertent criticality is occurring. The functional requirement is to ensure that adequate compensatory measures are implemented that will detect an alarming NIM and alert other personnel who may be in the area. By establishing the appropriate compensatory measures, the consequences of an inadvertent criticality to the facility worker will be minimized. The compensatory measures are implemented by H–Canyon procedures.

8.4.5.6.4 SPECIFIC ADMINISTRATIVE CONTROL EVALUATION

This SAC ensures that a positive mechanism exists to detect NIMs that are in an alarm condition and to alert personnel who cannot see or hear the NIM alarm to evacuate or not enter the affected area. By alerting personnel to the occurrence of an inadvertent criticality, a potential inadvertent personnel exposure to ionizing radiation is minimized. This SAC along with the credited NIM LCO is effective in minimizing the potential consequences from an inadvertent criticality in H–Canyon. This SAC supplements but is not a required action as identified in LCO 3.2.4. LCO 3.2.4 Required Action B is for an inoperable NIM alarm indicator and is specifically related to a condition in which the NIM alarm is found to be inoperable. This SAC assumes the NIM alarms are operable but that a planned activity impairs the ability of the workers in the area to hear or see the alarm. This SAC is not a LCO required action and there is no other LCO required action necessary.

8.4.5.7 Nuclear Criticality Safety Program - Inadvertent Criticality Prevention (TSR 5.7.2.3.g)

Verify that no visible leaks exist in the First Cycle 1AX stream piping on the H–Canyon Second Level prior to initiation of hot feed.

8.4.5.7.1 SAFETY FUNCTION

This AC is designated as an SAC because it serves an SS safety function that cannot be performed by an engineered safety system. This SAC mitigates a common mode failure identified in the H–Canyon DCA. The engineered safety feature supporting the first defense of a criticality scenario identified in the DCA is the measurement of the solvent flow to the 1A Bank and the 1AX low flow TSR interlock. The DCA administrative control providing the second defense for the identified scenario is the calculation of a minimum Third Level head tank depletion rate. However, a common mode exists in these identified defenses. A leak on Second Level of H–Canyon downstream of both the 1AX flow indication and the head tank level determination would indicate that a minimum flow is being maintained when the solution is not getting to the 1A Bank. There are no SSCs that can perform the leak inspection. If a minimum solvent flowrate to the 1st Cycle Mixer–settler 1A Bank is not maintained, a reflux condition could be created in the banks such that the fissile material (Uranium) is not removed from the banks. Eventually, the fissile material could accumulate to the point that the mass limit is exceeded and a criticality could occur in the 1A Bank. This SAC requires an inspection at every

startup prior to hot feed to determine if there are leaks in the 1AX piping system that could cause an insufficient solvent flow to the 1st Cycle that could lead to a reflux and inadvertent criticality (Section 8.3.2.4). This verification is only performed during startup of cold streams and is not required during hot feed operation.

8.4.5.7.2 SPECIFIC ADMINISTRATIVE CONTROL DESCRIPTION

Fissile material solutions are processed in H–Canyon and OF–H. NCSEs and the DCA contain controls to prevent an inadvertent criticality in the H–Canyon and OF–H processes. One of the credited controls to prevent a criticality is to ensure that favorable conditions for a reflux or criticality scenario are not created in the 1st Cycle Mixer–settlers. One item in this suite of controls is to ensure that a sufficient quantity of solvent is fed to the mixer–settler to maintain the solutions in the banks in an optimum range. Other DCA and TSR controls also protect against a criticality in the mixer–settlers. This control is designated as a TSR SAC because it addresses and mitigates a common mode failure for an identified DCA scenario. Common mode failures are required to be protected by TSR level controls.

8.4.5.7.3 FUNCTIONAL REQUIREMENTS

The requirement is to ensure that the 1st Cycle Mixer–settler 1A Bank solvent flow is within the required operating range to prevent an inadvertent criticality in the banks. The functional requirement is to ensure that significant leaks in the 1AX stream piping that could alter the solution characteristics in the 1A Bank are detected and repaired prior to start up and operation of the banks on hot feed. This control is only required during startup of cold streams and is not required during hot feed operation. The inspections are implemented by H–Canyon procedures.

8.4.5.7.4 SPECIFIC ADMINISTRATIVE CONTROL EVALUATION

This SAC ensures that a positive mechanism exists to detect changes (from leaks) in the solvent flow to the 1st Cycle Mixer–settler 1A Bank that could lead to an inadvertent criticality. This SAC along with the other TSR and DCA controls is effective in minimizing the potential for an inadvertent criticality in the H–Canyon 1st Cycle Banks.

8.4.5.8 Nuclear Criticality Safety Program - Inadvertent Criticality Prevention (TSR 5.7.2.3.h)

An inspection of the structural integrity of the Reactor Fuel Storage Racks being used with any fissile material shall be completed on an interval not to exceed 10 years.

8.4.5.8.1 SAFETY FUNCTION

This AC is designated as an SAC because it serves an SS safety function that cannot be performed by an engineered safety system. There are no SSCs that can perform the structural integrity inspection. The fuel storage racks are a credited passive DF that prevents a criticality from the fissile material stored in the racks. The DF of the racks is the spacing between the

storage locations that prevents two or more fissile material masses from coming into close proximity with each other. One method to prevent a criticality from solid fissile material is to keep the material separated to reduce neutron interactions between the fissile material locations. The fuel storage racks maintain this minimum required spacing between any stored fissile material. Damage or long term degradation to the fuel storage racks could decrease the distance between the storage locations thereby allowing the neutrons from the two (or more) stored fissile material locations to have increased interactions. This interaction could lead to an inadvertent criticality in the Reactor Fuel Storage Racks. The inspection required by this SAC ensures that there has not been any damage to the fuel storage racks that has decreased the minimum spacing provided by the rack design and construction. The inspection frequency is based on operational history and engineering judgment and the robust construction of the racks. This SS safety function minimizes the potential for inadvertently creating the conditions necessary for a criticality in the H–Canyon Reactor Fuel Storage Racks in the Railroad Tunnel (Section 8.3.2.4).

8.4.5.8.2 SPECIFIC ADMINISTRATIVE CONTROL DESCRIPTION

Solid reactor fuel rods, bundles, and assemblies can be stored in the Reactor Fuel Storage Racks. This stored fissile material is lag storage to support dissolver operations and unloading of the material in the Railroad Tunnel. Since the Reactor Fuel Storage Racks are a passive DF, they are credited in the SAR and the DCA with preventing a criticality. The fuel storage racks prevent a criticality by maintaining a minimum spacing between the stored material to ensure the fuel does not get close enough for neutronic interactions between the fissile material locations that could lead to an inadvertent criticality. Cranes are used to load and unload the fuel storage racks and there is the potential for dropped loads and other factors (e.g., other accidents or corrosion) to affect the structural integrity of the racks such that the minimum spacing provided by the racks may be reduced. To ensure that the minimum spacing is not reduced because of changes in the structural integrity of the racks, this SAC requires an inspection of the racks to ensure the credited DF is capable of meeting its intended safety function of providing a minimum spacing between any fissile material stored in the rack. This control is designated as a TSR SAC because it is a primary control in preventing a criticality in the reactor fuel storage racks.

8.4.5.8.3 FUNCTIONAL REQUIREMENTS

The requirement is to ensure that the potential for an inadvertent criticality in the fuel storage racks is minimized. The functional requirement is to ensure that the racks are inspected at least every 10 years to ensure that the structural integrity of the rack has not been compromised and that the racks maintain a minimum space (distance) between the adjacent fissile material storage positions. The inspections are implemented by H–Canyon procedures.

8.4.5.8.4 SPECIFIC ADMINISTRATIVE CONTROL EVALUATION

This SAC ensures that a positive mechanism exists to detect changes in the fuel storage racks that could lead to an inadvertent criticality. This SAC along with the credited DF of the Reactor Fuel Storage Rack minimum spacing is effective in minimizing the potential for an inadvertent criticality in the H–Canyon Reactor Fuel Storage Racks.

8.4.5.9 Nuclear Criticality Safety Program - Inadvertent Criticality Prevention (TSR 5.7.2.3.i)

An inspection of the structural integrity of the Dissolver Inserts shall be completed each time the inserts are inserted into the Dissolver.

8.4.5.9.1 SAFETY FUNCTION

This AC is designated as an SAC because it serves an SS safety function that cannot be performed by an engineered safety system. There are no SSCs that can perform the structural integrity inspection. The various dissolver inserts are a credited passive DF that prevents a criticality in the dissolver. The DF of the inserts is the spacing between the insert wells that prevents two or more fissile masses from coming into close proximity with each other and maintains the necessary spacing to ensure criticality safety for fissile masses in an aqueous solution. Additionally, the dissolver inserts ensure that as the fissile material dissolves, the solid fragments and highly concentrated solution at the dissolving fissile mass surface do not interact with the fissile material in adjacent wells so that conditions favorable for a criticality cannot occur. Damage to the dissolver inserts could decrease the distance between the insert wells thereby allowing the fissile mass to increase interaction. This interaction could lead to an inadvertent criticality in the H–Canyon dissolvers. The inspection required by this SAC ensures that there has not been any damage to the dissolver inserts that has decreased the minimum spacing provided by the insert design and construction. This SS safety function minimizes the potential for inadvertently creating the conditions necessary for a criticality in the H–Canyon dissolvers (Section 8.3.2.4).

8.4.5.9.2 SPECIFIC ADMINISTRATIVE CONTROL DESCRIPTION

Fissile material is dissolved in the H–Canyon dissolvers. The solid fissile material charged to the dissolver must be physically separated from other fissile masses charged to the dissolver to prevent a criticality during the charging operations. Also, as the fissile material dissolves, fissile masses may accumulate on the bottom of the dissolver depending upon the dissolution rate of the material. Additionally, at the interface of the fissile solids and the nitric acid solution, there is a very high fissile mass concentration in the aqueous phase from the dissolution process. The dissolver inserts prevent an interaction of the fissile mass and concentrated fissile solution in an insert well with those in adjacent wells. The dissolver inserts are used for specific fuel types and are removed and replaced in each dissolver depending upon the fuel being dissolved. Inside the dissolver, there is very little potential for structural damage to the inserts. However, the inserts are removed and placed into the dissolvers via remote crane operation and the inserts are stored in between uses. During the insertion, removal, or handling processes, the inserts could be damaged in such a manner they would decrease the spacing between the wells. This could lead to conditions that could create a criticality in the dissolvers. To ensure that the minimum spacing is not reduced because of changes in the structural integrity of the inserts, this SAC requires an inspection of the inserts prior to the inserts being inserted into the dissolver to ensure the credited DF is capable of meeting its intended safety function. This control is designated as a TSR SAC because it is a primary control in preventing a criticality in the dissolver.

8.4.5.9.3 FUNCTIONAL REQUIREMENTS

The requirement is to ensure that the potential for an inadvertent criticality in the dissolver is minimized. The functional requirement is to ensure that the inserts are inspected prior to being inserted into the dissolver to ensure that the structural integrity of the insert has not been compromised and that the insert maintain a minimum space (distance) between the fuel in adjacent wells of the insert. The inspections are implemented by H–Canyon procedures.

8.4.5.9.4 SPECIFIC ADMINISTRATIVE CONTROL EVALUATION

This SAC ensures that a positive mechanism exists to detect changes in the inserts that could lead to an inadvertent criticality. This SAC along with the credited DF of the insert minimum spacing is effective in minimizing the potential for an inadvertent criticality in the H–Canyon dissolvers.

8.4.5.10 Nuclear Criticality Safety Program - Inadvertent Criticality Mitigation (TSR 5.7.2.3.j)

Prevent personnel access to the affected areas of the Section 15 Personnel Tunnel during Section 15H or 15W Sump flushing operations.

8.4.5.10.1 SAFETY FUNCTION

This AC is designated as an SAC because it serves an SS safety function that cannot be performed by an engineered safety system. There are no SSCs that can ensure that personnel are not in the Personnel Tunnel since this tunnel is used by personnel involved in routine daily canyon operations. The personnel tunnel runs under Section 15 of both the Hot and Warm Canyons. The Hot and Warm Sumps in Section 15 of the canyons are directly over the personnel tunnel. The limited amount of concrete in the sump floor/personnel tunnel roof do not provide adequate shielding against the ionizing radiation from an inadvertent criticality in the sumps. The most likely scenario for a criticality in the sumps is during the sump and/or cell flushing operations in which the fissile mass or concentration limits for the sump could be exceeded. If personnel are in the personnel corridor within an area a few feet either side of the affected sump centerline, the personnel could be exposed to a high radiation area (greater than 12–Rads) (Ref. 153). A NIM alarm could be used to evacuate personnel, however none are currently installed. Restricting access to the personnel tunnel is an acceptable control to protect canyon personnel. By restricting personnel access to the personnel tunnel when the sumps are being flushed, the potential consequences of an inadvertent criticality are minimized or prevented. Since there are no automatic SSCs to prevent personnel entering the personnel tunnel, this SAC requires the establishment of other compensatory measures to prevent personnel access to the tunnel during the highest risk events (i.e., sump flushing operations). This SAC minimizes the consequences of an inadvertent criticality in H–Canyon Section 15 Hot and Warm Sumps (Section 8.3.2.4).

8.4.5.10.2 SPECIFIC ADMINISTRATIVE CONTROL DESCRIPTION

If a criticality event occurs in one of the Section 15 Hot and Warm Sumps when personnel are in the Section 15 Personnel Tunnel, the personnel could be exposed to dangerously high levels of radiation. To be in this high radiation area, the personnel would have to be within a few lineal feet of the centerline of the sump. The sump is located directly over the personnel tunnel and the concrete of the sump floor is the roof of the personnel tunnel. Although this concrete barrier provides significant mitigation of the radiation associated with the criticality event, it does not provide sufficient protection to prevent the worker from being exposed to a 12–Rad or higher ionizing radiation field. The most credible scenario for a criticality in the sumps is during the sump/cell flushing activities when the fissile mass or concentration limits in the sump could be exceeded. To prevent exposing personnel to potentially dangerously high radiation levels, H–Canyon implements procedural controls to ensure personnel do not enter the personnel tunnel during the sump flushing operations. This control is designated as a TSR SAC because it is a primary control in mitigating the consequences of a criticality in the Section 15 Hot and Warm Sumps.

8.4.5.10.3 FUNCTIONAL REQUIREMENTS

The requirement is to minimize potential personnel exposure to ionizing radiation from a criticality in the H–Canyon Section 15 Hot or Warm Sumps. The functional requirement is to ensure that adequate measures are implemented that will prevent personnel from entering the Section 15 Personnel Tunnel during the time of highest risk for a criticality in the sumps, which is during the sump flushing activities. By establishing the appropriate access control measures, the consequences of an inadvertent criticality to the facility worker will be minimized. The compensatory measures are implemented by H–Canyon procedures.

8.4.5.10.4 SPECIFIC ADMINISTRATIVE CONTROL EVALUATION

This SAC ensures that a positive mechanism exists to minimize personnel exposure to dangerously high levels of ionizing radiation that occurs during a criticality. By preventing personnel from entering the personnel tunnel during sump flushing operations in the 15H and 15W Cells, a potential inadvertent personnel exposure to ionizing radiation is minimized. This SAC is effective in minimizing the potential consequences from an inadvertent criticality in the H–Canyon Section 15 Hot and Warm Sumps.

8.4.5.11 Nuclear Criticality Safety Program - Inadvertent Criticality Mitigation (TSR 5.7.2.3.k)

Prevent personnel access to the Section 5W Cell Cover areas during neutralization operations in Tank 9.8.

8.4.5.11.1 SAFETY FUNCTION

This AC is designated as an SAC because it serves an SS safety function that cannot be performed by an engineered safety system. There are no SSCs that can ensure that personnel are not on the Section 5W Cell Cover since this area is often used by personnel involved in routine canyon operations. The cell covers are over the Section 5 cells in the Warm Canyon. The Section 5 Cell Covers are in a direct line of sight of Tank 9.8. There is minimal shielding between the Section 5 Cell Covers and Tank 9.8. Therefore, the Cell Covers are within the 12–Rad zone of a criticality event for this tank. The most likely scenario for a criticality in Tank 9.8 is during the waste neutralization operations in the tank. If personnel are on the Section 5W Cell Covers, the personnel could be exposed to a high radiation area (greater than 12–Rads) (Ref. 154). A NIM alarm could be used to evacuate personnel, however none are currently installed. Restricting access to the Section 5W Cell Covers is an acceptable control to protect canyon personnel. By restricting personnel access to the Section 5W Cell Covers when neutralization operations are being conducted in Tank 9.8, the potential consequences of an inadvertent criticality are minimized or prevented. Since there are no automatic SSCs to prevent personnel being on the cell covers, this SAC requires the establishment of other compensatory measures to prevent personnel access to the cell covers during the highest risk events, i.e., neutralization operations. This SAC minimizes the consequences of an inadvertent criticality in H–Canyon Tank 9.8 (Section 8.3.2.4).

8.4.5.11.2 SPECIFIC ADMINISTRATIVE CONTROL DESCRIPTION

If an inadvertent criticality occurs in H–Canyon, personnel, primarily the facility operators, could be exposed to extremely high levels of ionizing radiation. If a criticality event occurs in Tank 9.8 when personnel are on the Section 5W Cell Covers, the personnel could be exposed to dangerously high levels of radiation because they would be in a direct line of sight of the criticality event in the tanks. There is no significant shielding or other barriers between the potential criticality site and personnel on the Section 5W Cell Covers. The only mitigation available for personnel on the designated cell covers is the distance from the criticality which provides some mitigation. However, it does not provide sufficient protection to prevent the worker from being exposed to a 12–Rad or higher ionizing radiation field. The most credible scenario for a criticality in Tank 9.8 is during the neutralization operations when the fissile mass or concentration limits in the tank could be exceeded. To prevent exposing personnel to potentially dangerously high radiation levels, H–Canyon implements procedural controls to ensure personnel do not access the Section 5W Cell Covers during the neutralization operations. This control is designated as a TSR SAC because it is a primary control in mitigating the consequences of a criticality in Tank 9.8.

8.4.5.11.3 FUNCTIONAL REQUIREMENTS

The requirement is to minimize potential personnel exposure to ionizing radiation from a criticality in the H–Canyon Tank 9.8. The functional requirement is to ensure that adequate measures are implemented that will prevent personnel from accessing or being on the Section 5W Cell Covers during the time of highest risk for a criticality in the tank, which is during the

neutralization operations. By establishing the appropriate access control measures, the consequences of an inadvertent criticality to the facility worker will be minimized. The compensatory measures are implemented by H–Canyon procedures.

8.4.5.11.4 SPECIFIC ADMINISTRATIVE CONTROL EVALUATION

This SAC ensures that a positive mechanism exists to minimize personnel exposure to dangerously high levels of ionizing radiation that occurs during a criticality. By preventing personnel from being on the Section 5W Cell Covers during neutralization operations in Tank 9.8, a potential inadvertent personnel exposure to ionizing radiation is minimized. This SAC is effective in minimizing the potential consequences from an inadvertent criticality in H–Canyon Tank 9.8.

8.4.5.12 Nuclear Criticality Safety Program - Inadvertent Criticality Mitigation (TSR 5.7.2.3.l)

A Fire Curtain shall be in place between Sections 6W and 7W, and between Sections 7W and 8W when personnel are allowed to access the Section 5W Cell Cover areas. This AC is only required if a credible criticality scenario exists in Tanks 8.8, 9.5 or 9.6.

8.4.5.12.1 SAFETY FUNCTION

This AC is designated as an SAC because it serves an SS safety function that cannot be performed by an engineered safety system. There are no SSCs that can ensure that the Fire Curtains between Sections 6W and 7W and Sections 7W and 8W are in place when personnel are on the Section 5W Cell Covers since this area is often used by personnel involved in routine canyon operations. The cell covers are over the Section 5W cells in the Warm Canyon. The Section 5 Cell Covers are in a direct line of sight of tanks in Section 9W where a criticality is credible. Some canyon operations will result in credible criticality scenarios in these tanks (see the DCA for credible scenarios) There is minimal shielding between the Section 5W Cell Covers and the applicable tanks. Therefore, the Cell Covers are within the 12–Rad zone of a criticality event in these tanks. If personnel are on the Section 5W Cell Covers, they could be exposed to a high radiation area (greater than 12–Rads) (Ref. 154). By ensuring the listed fire curtains are in place when personnel are on the Section 5W Cell Covers when there is a credible criticality in tanks in Section 9W, the potential consequences of an inadvertent criticality are minimized or prevented. Since there are no automatic SSCs to ensure the designated fire curtains are in place, this SAC requires the establishment of procedural controls to ensure the fire curtains are in place when personnel are on the Section 5W Cell Covers. This SAC minimizes the consequences of an inadvertent criticality in H–Canyon Tanks 8.8, 9.5, and 9.6 (Section 8.3.2.4).

8.4.5.12.2 SPECIFIC ADMINISTRATIVE CONTROL DESCRIPTION

If an inadvertent criticality occurs in H–Canyon, personnel, primarily the facility operators, could be exposed to extremely high levels of ionizing radiation. If a criticality event occurs in

one of applicable tanks when personnel are on the Section 5W Cell Covers, they could be exposed to dangerously high levels of radiation because they would be in a direct line of sight of the criticality event in the tanks. There is no significant shielding or other barriers between the potential criticality site and personnel on the Section 5W Cell Covers other than the Fire Curtains between Sections 6W and 7W and Sections 7W and 8W. The fire curtains are made of concrete, which provides the credited shielding capability. The fire curtains are removed on a very infrequent basis. Because of the construction of the fire curtains and the fact they are removed infrequently, they are effective shielding against a criticality that occurs in the tanks in Section 9W. Without the fire curtains, the only mitigation available for personnel on the designated cell covers is the distance from the criticality which provides some mitigation. However, it does not provide sufficient protection to prevent the worker from being exposed to a 12–Rad or higher ionizing radiation field. The Fire Curtains between Sections 6W and 7W and Sections 7W and 8W provide additional shielding that will reduce the radiation area to less than a 12–Rad zone. To prevent exposing personnel to potentially dangerously high radiation levels, H–Canyon implements procedural controls to ensure the Fire Curtains between Sections 6W and 7W and Sections 7W and 8W are in place when personnel are on the Section 5W Cell Covers. This control is designated as a TSR SAC because it is a primary control in mitigating the consequences of a criticality in tanks in Section 9W.

8.4.5.12.3 FUNCTIONAL REQUIREMENTS

The requirement is to minimize potential personnel exposure to ionizing radiation from a criticality in the H–Canyon tanks in Section 9W. The functional requirement is to ensure that shielding (i.e., the designated fire curtains) is in place to prevent personnel on the Section 5W Cell Covers from being in a 12–Rad zone from an inadvertent criticality in the tank. By ensuring the Fire Curtains between Sections 6W and 7W and Sections 7W and 8W are in place, the consequences of an inadvertent criticality to the facility worker will be minimized. The control is implemented by H–Canyon procedures.

8.4.5.12.4 SPECIFIC ADMINISTRATIVE CONTROL EVALUATION

This SAC ensures that a positive mechanism exists to minimize personnel exposure to dangerously high levels of ionizing radiation that occurs during a criticality. By ensuring the Fire Curtains between Sections 6W and 7W and Sections 7W and 8W are in place when personnel are on the Section 5W Cell Covers, a potential inadvertent personnel exposure to ionizing radiation is minimized. This SAC is effective in minimizing the potential consequences from an inadvertent criticality in H–Canyon tanks in Section 9W.

8.4.5.13 Nuclear Criticality Safety Program - Inadvertent Criticality Mitigation (TSR 5.7.2.3.m)

Restrict personnel access to the Warm Canyon Crane Access Walkway and Warm Crane Cab when the crane is in Sections 2W-18W as “Areas Not Normally Occupied,” as defined in N-TRT-G-00001). Personnel who are granted access to these areas shall be equipped with alarming personnel dosimeters capable of quickly detecting and alarming to a nuclear criticality.

8.4.5.13.1 SAFETY FUNCTION

This AC is designated as an SAC because it serves an SS safety function that cannot be fulfilled by a SSC. There are no SSCs that can control personnel access to the Warm Canyon Crane Access Walkway or Cab or ensure that personnel wear the appropriate dosimetry. There is the potential for a criticality in several sections of the Warm Canyon. Even in those sections where there is little or no potential for a criticality, the Warm Crane Cab and Access Walkway could be within the 12–Rad zone of a criticality event in another Warm Canyon section. If personnel are in the Warm Canyon Crane Access Walkway or Warm Crane Cab, the personnel could be exposed to a high radiation area (greater than 12–Rad) (Ref. 155). A NIM alarm could be used to evacuate personnel, however none are currently installed. Restricting access to the above areas or requiring appropriate dosimetry are acceptable controls to protect canyon personnel. By restricting personnel access or ensuring personnel wear the appropriate dosimetry in these potential high radiation areas, the potential consequences of an inadvertent criticality are minimized or prevented. Since there are no automatic SSCs to ensure the required actions are completed, this SAC requires the establishment of procedural controls to implement the required actions. This SAC minimizes the consequences of an inadvertent criticality in the Warm Canyon (Section 8.3.2.4).

8.4.5.13.2 SPECIFIC ADMINISTRATIVE CONTROL DESCRIPTION

If an inadvertent criticality occurs in H–Canyon, personnel, primarily the facility operators, could be exposed to extremely high levels of ionizing radiation. If a criticality event occurs in one of the Warm Canyon Cells when personnel are on the Warm Canyon Crane Access Walkway or in the Warm Crane Cab, the personnel could be exposed to high levels of radiation because they would be in a direct line of sight of the criticality event. There is no significant shielding or other barriers between the potential criticality site and personnel in the area designated in the SAC. Without shielding, the only mitigation available for personnel in the designated areas is the distance from the criticality which provides some mitigation. However, it does not provide sufficient protection to prevent the worker from being exposed to a 12–Rad or higher ionizing radiation field. Preventing unauthorized personnel access to the Warm Canyon Crane Access Walkway or the Warm Crane Cab minimizes the potential for personnel to be exposed to the high radiation from a criticality. Ensuring the personnel authorized to access these areas wear the proper alarming dosimetry ensures that personnel will not enter or will immediately evacuate any potential high radiation area. This control is designated as a TSR SAC because it is a primary control in mitigating the consequences of a criticality in the Warm Canyon which would present a significant radiological exposure hazard to the facility worker in the designated areas.

8.4.5.13.3 FUNCTIONAL REQUIREMENTS

The requirement is to minimize potential personnel exposure to ionizing radiation from a criticality in the Warm Canyon. The functional requirement is to ensure that personnel access is restricted to authorized personnel and to ensure the authorized personnel in the designated areas wear the proper alarming dosimetry. By ensuring these actions are in place, the consequences of

an inadvertent criticality to the facility worker will be minimized. The control is implemented by H–Canyon procedures.

8.4.5.13.4 SPECIFIC ADMINISTRATIVE CONTROL EVALUATION

This SAC ensures that a positive mechanism exists to minimize personnel exposure to high levels of ionizing radiation that occurs during a criticality. By ensuring personnel access to the Warm Canyon Crane Access Walkway and the Warm Crane Cab is controlled so that unauthorized personnel do not enter the area and ensuring authorized personnel in these areas wear the correct alarming dosimetry, a potential inadvertent personnel exposure to ionizing radiation is minimized. This SAC is effective in minimizing the potential consequences from an inadvertent criticality in the Warm Canyon.

8.4.5.14 Chemical Inventory Program (TSR 5.7.2.9.d)

Prohibit the storage or use of HAN in H–Canyon or OF–H.

8.4.5.14.1 SAFETY FUNCTION

This AC is designated as an SAC because it serves an SS safety function that cannot be fulfilled by a SSC. The Chemical Inventory Program is designated an SAC because it serves a SS safety function that cannot be performed by an engineered safety system. This SS safety function prohibits the storage or use of HAN in H–Canyon or OF–H, which eliminates the potential for a HAN-Nitric acid reaction event.

8.4.5.14.2 SPECIFIC ADMINISTRATIVE CONTROL DESCRIPTION

Under certain conditions when HAN and nitric acid are mixed together, the HAN will decompose auto-catalytically. The decomposing HAN has the potential to over-pressurize the vessel in which the solution is stored. If the vessel is not adequately vented to relieve the pressure from the gaseous products generated in the reaction, a pressure type explosion could occur in the vessel.

8.4.5.14.3 FUNCTIONAL REQUIREMENTS

When the HAN has been removed from H-Canyon and OF-H and the SAC is in place to prohibit the storage or use of HAN in H–Canyon or OF–H, the frequency of a HAN-nitric acid event is reduced to BEU.

8.4.5.14.4 SPECIFIC ADMINISTRATIVE CONTROL EVALUATION

All the HAN has been removed from H-Canyon and OF-H. There are also no plans to use HAN in the H-Modified Process in H-Canyon for the remaining fuels to be processed. Since HAN is

no longer available in H-Canyon and OF-H and will not be used in the HM Process, it is not credible to have the HAN-Nitric Acid uncontrolled reaction in H-Canyon and OF-H. An SAC that requires that HAN not be stored or used in either H-Canyon or OF-H protects the BEU frequency of the event in H-Canyon and OF-H.

8.4.5.15 Process Controls that Address Inadvertent Transfers and Releases, and Loss of Containment - Inadvertent Transfer (TSR 5.7.2.10.a)

Blanks or blank equivalents shall be installed on unused CCW high vertical and horizontal return line nozzles. These blanks or blank equivalents shall be inspected every 18 months.

8.4.5.15.1 SAFETY FUNCTION

This AC is designated as an SAC because it serves an SC safety function that cannot be performed by an engineered safety system. The blanks, although a passive feature, have to be installed on the proper routes and verified to be in place on a periodic basis. The SC safety function prevents an inadvertent transfer of the radioactive solution in an H–Canyon tank to the CCW System and is part of the control suite that prevents an airborne radioactive release that impacts the onsite worker and the offsite public.

8.4.5.15.2 SPECIFIC ADMINISTRATIVE CONTROL DESCRIPTION

A transfer error in which a jumper, probably a flexible jumper, is connected to an unused cooling water return line can allow the contents of a canyon tank to be released to the CCW System. Without controls to prevent this event, the radioactive solution in the canyon tank could reach the CCW System Cooling Tower where it would be released as an airborne radioactive material source with significant radiological consequences to the offsite public and the onsite worker. The accident scenario requires the outlet piping of the tank to be connected to a high vertical or horizontal CCW return nozzle on the canyon wall and then the tank contents be transferred to the cooling water system. There are no controls that will mitigate this event; therefore, only preventive controls are available to reduce the event risk. The installation of the blanks or blank equivalents on the designated nozzles prevents an inadvertent release of radioactive material to the environment via the CCW System.

8.4.5.15.3 FUNCTIONAL REQUIREMENTS

The functional requirement is to minimize the potential for connecting the outlet piping from an H–Canyon tank to the CCW return nozzle so that an inadvertent transfer of the tank contents to the cooling water system is prevented. The blanks or blank equivalents on the routes prevent the event by ensuring that the blanks or blank equivalents are identified and installed. The 18 month inspection requirement ensures that the blanks or blank equivalents remain in place or are replaced correctly if a cooling water route is returned to or removed from service.

8.4.5.15.4 SPECIFIC ADMINISTRATIVE CONTROL EVALUATION

There are no other controls, other than the design of the canyon and tank nozzle arrangement, that will prevent the inadvertent transfer through the wrong route. Another SAC (TSR 5.7.2.10.b) and engineered controls identified in LCO 3.2.2 and the DF of the delaying basin and overflow line are available that help prevent an inadvertent transfer of the radioactive solutions to the CCW Return System with a subsequent airborne release of radioactive material. This AC is the first control in the control set that makes an airborne release from the cooling tower a BEU event. This is an SC SAC and redundancy is provided by the requirement to independently verify any piping changes in the canyon process routes. The LCO and DF provide additional support, independence, and diversity of controls necessary to provide an adequate level of protection to prevent the accident. The Crane Operators in the H-Canyon are adequately trained and qualified to perform the installation, removal, and inspection requirements of this SAC without any additional qualification or analysis.

8.4.5.16 Process Controls that Address Inadvertent Transfers and Releases, and Loss of Containment - Inadvertent Transfer (TSR 5.7.2.10.b)

All flexible jumper installations and all piping route changes shall require independent verification of correct installation.

8.4.5.16.1 SAFETY FUNCTION

This AC is designated as an SAC because it serves an SC safety function that cannot be performed by an engineered safety system. Jumper and piping routes are often changed to support H-Canyon operations. There is no automatic system that will ensure the jumpers, especially flexible jumpers, are connected to the right nozzle to ensure the radioactive solutions will be transferred to the intended receipt tank. Operators must install the jumpers and make the piping route changes, and only another operator can independently verify the correct route is established. The SC safety function prevents an inadvertent transfer of the radioactive solution in an H–Canyon tank to the SCW System or the CCW System or an inadvertent transfer outside H–Canyon. The SC control prevents a release of the radioactive solution to the offsite public as a liquid release if an inadvertent transfer occurs to the SCW System and to the OF–H tanks and an airborne release for inadvertent transfers to the CCW System and to an OF–H Tank. The SAC helps prevent any type transfer error associated with piping route and jumper changes inside H–Canyon.

8.4.5.16.2 SPECIFIC ADMINISTRATIVE CONTROL DESCRIPTION

A transfer error occurs when process solutions are transferred to unintended locations. H–Canyon operations require many pipe and jumper route changes to efficiently use the flexibility in the canyon design and process layout. Transfer errors have occurred from connecting jumpers or pipes in the wrong configuration. The SAC requires independent verification of any piping or jumper changes to minimize the potential for establishing an incorrect transfer route. Since the

transfer route changes are implemented by facility personnel, there are no automatic controls or equipment that will prevent or minimize the inadvertent connections. The SAC will help minimize this event by requiring an independent verification of jumper installation and piping route changes to ensure the correct route is established. The blanks on the unused cooling water nozzles as required by SAC 5.7.2.10.a also help to prevent the inadvertent transfer and provide some independence and redundancy in the control set.

8.4.5.16.3 FUNCTIONAL REQUIREMENTS

The requirement is to minimize the number of inadvertent transfer errors by preventing the establishment of the incorrect piping route before the transfer is started. The requirement for independent verification of the piping (jumper) route changes helps to prevent the transfer error by ensuring that the jumpers are connected correctly. By requiring independent verification, the potential for a single human error that could lead to an inadvertent connection is reduced.

8.4.5.16.4 SPECIFIC ADMINISTRATIVE CONTROL EVALUATION

Although there are SC and SS systems on the Segregated and CCW Systems to automatically monitor for increased radioactivity in the cooling water, these systems will only divert the water to the ETF. As noted, other SACs are controls that will prevent inadvertent transfers to the OF–H. The purpose of the SAC is to prevent connecting the jumpers to the wrong nozzles to minimize the potential for a transfer error to occur. This SC SAC is implemented prior to any transfer being initiated and as such is a significant factor in reducing the potential for an inadvertent transfer. There are no independent or diverse controls that will support this SAC. The redundancy is provided by the independent verification requirement which requires a second operator check the route setup after the first operator has completed the setup. The H-Canyon crane operators are adequately trained and qualified to perform the route setups and the independent verification. No additional training or qualification or reliability analysis is required to support the SAC.

8.4.5.17 Process Controls that Address Inadvertent Transfers and Releases, and Loss of Containment - Loss of Containment Uncontrolled Reaction on H–Canyon Third Level or in Outside Facilities H–Area (TSR 5.7.2.10.e)

Valve lineups shall be independently verified for correctness for tanks with the potential for an uncontrolled reaction.

8.4.5.17.1 SAFETY FUNCTION

This AC is designated as an SAC because it serves an SS safety function that cannot be performed by an engineered safety system. The SS safety function prevents an inadvertent mixing of chemicals that could lead to an uncontrolled reaction in either the Third Level of H–Canyon or OF–H.

8.4.5.17.2 SPECIFIC ADMINISTRATIVE CONTROL DESCRIPTION

Mixing certain chemicals used in H–Canyon and OF–H, especially nitric acid and ferrous sulfamate, can lead to vigorous uncontrolled reactions that release chemical vapors (e.g., NOx) that could present a life–threatening situation to the facility worker in the immediate vicinity of where the reaction occurs. These type events have occurred in H–Canyon, particularly in the Third Level Head Tanks, as the result of adding the wrong chemicals to a tank. Although reactions between 64% nitric acid and 40% ferrous sulfamate are the primary reactions of concerns, there are other chemicals that when mixed can produce an uncontrolled reaction with a large heat or vapor release or cause hazardous chemicals to be ejected from the tank vents. The valve lineups and piping route verification are completed by facility personnel. There are no automated systems that will prevent the inadvertent mixing of the chemicals. The SAC helps prevent the inadvertent mixing of the incompatible chemicals to prevent the uncontrolled reaction by independently verifying valve lineups for correctness. There are no controls that will mitigate this event; therefore, only preventive controls are available to reduce the event risk.

The only tanks with the potential for mixing strong nitric acid and ferrous sulfamate are Tanks 8C,14C, and 17G (Ref. 152). The mixing of these chemicals is prevented by isolating 64% nitric acid from 3rd level. Isolation of 64% nitric acid from the 3rd level head tanks ensures that there are no tanks with the potential for uncontrolled reaction from the mixing of ferrous sulfamate and 64% nitric acid.

8.4.5.17.3 FUNCTIONAL REQUIREMENTS

The requirement is to ensure that the valve lineups for chemical transfers are implemented correctly to prevent mixing incompatible chemicals that when mixed will undergo an uncontrolled reaction. The functional requirement of this control is to prevent an injury to the facility worker from the inadvertent mixing of incompatible chemicals that could lead to the uncontrolled reaction.

8.4.5.17.4 SPECIFIC ADMINISTRATIVE CONTROL EVALUATION

Independent verification of correct valve lineups for the various transfer routes helps prevent the inadvertent mixing of incompatible chemicals that could lead to an uncontrolled reaction that could release toxic chemicals that could be hazardous to the facility worker. The configuration control program and this SAC minimize the risk of inadvertently mixing the incompatible chemicals.

8.4.5.18 Process Controls that Address Inadvertent Transfers and Releases, and Loss of Containment - Loss of Containment Uncontrolled Reaction in Outside Facilities H–Area and the Release of the Entire Contents of One or More Tanks in Bulk Chemical Storage or the Acid Recovery Unit in Outside Facilities H–Area (TSR 5.7.2.10.f)

Inspections of the structural integrity of OF–H Basins and Curbs shall be performed at least every 18 months. (600 Basins and Cold Chemical Storage Area Basins only)

8.4.5.18.1 SAFETY FUNCTION

This AC is designated as an SAC because it serves an SS safety function that cannot be performed by an engineered safety system. The OF-H 600 Basins and Cold Chemical Storage Area Basins are designated as SS passive DFs to prevent mixing incompatible chemicals that could lead to an uncontrolled reaction in OF–H or release to the environment. The SS safety function of this SAC is to ensure the integrity of the OF–H Basins so that the DFs can fulfill their designated SS safety function.

8.4.5.18.2 SPECIFIC ADMINISTRATIVE CONTROL DESCRIPTION

Leaks, spills, transfer errors, or other events can cause a release of incompatible chemicals in OF–H that could lead to uncontrolled chemical reactions that cause a serious injury or life–threatening situation to the facility worker in OF–H or release to the environment. The release of the entire contents of one or more of the chemical storage tanks in the Bulk Chemical Storage or ARU in OF-H is a significant event because hazardous chemicals are released to the environment. The designated SS DF basins (600 Basins and Cold Chemical Basins) will hold the contents of the tank(s) expected to be released in the bounding accident scenario. Additionally, the basins will prevent the mixing of the incompatible chemicals and establish a containment barrier to prevent significant releases to the environment. Transfer errors, tank failures, leaks, spills, and natural phenomena events are the primary contributors to the release of the incompatible chemicals. This SAC ensures that the SS DFs of the basins are inspected every 18 months to ensure the basins are structurally sound and capable of preventing the mixing of any released chemicals. The 18-month inspection frequency was selected based on engineering judgment.

8.4.5.18.3 FUNCTIONAL REQUIREMENTS

The requirement is to ensure that designated SS passive DFs of the basins are capable of completing their credited function of containing any released liquid chemicals to prevent mixing that can result in an uncontrolled reaction that releases toxic fumes or a release to the environment. The functional requirement of this control is to prevent an injury to the facility worker from the inadvertent mixing of incompatible chemicals that could lead to the uncontrolled reaction and to prevent a release to the environment.

8.4.5.18.4 SPECIFIC ADMINISTRATIVE CONTROL EVALUATION

The structural integrity of the designated basins ensure that the basins are capable of fulfilling the assumed confinement safety function of the basins after chemicals are released to the basins. The inspection program as implemented by this SAC in conjunctions with the Configuration Control Program maintains the integrity of the basins to minimize the risk of inadvertently mixing incompatible chemicals.

8.4.5.19 Process Controls that Address Inadvertent Transfers and Releases, and Loss of Containment - Coil and Tube Failure Release to the Segregated Cooling Water System and Inadvertent Transfer to the Segregated Cooling Water System (TSR 5.7.2.10.g)

SCW shall not be released to Four Mile Creek with alpha or beta-gamma levels greater than 8000 d/m/ml.

8.4.5.19.1 SAFETY FUNCTION

This AC is designated as an SAC because it serves an SC safety function that cannot be performed by an engineered safety system. The cooling water is monitored by an automatic system before it reaches the delaying basin. The final sample taken by RadCon personnel verifies that the alpha and beta-gamma levels in the water are each less than the 8000 d/m/ml for releasing the water to Four Mile Creek (Ref. 160). The SC safety function prevents an inadvertent release to the offsite surface waterways of radioactive solution from an H–Canyon tank that is sent to the SCW System Delaying Basins. This prevents exposing the offsite public to radiological consequences from releasing potentially contaminated water from the SCW System.

8.4.5.19.2 SPECIFIC ADMINISTRATIVE CONTROL DESCRIPTION

There are two methods by which radioactive solutions from the H-Canyon tanks can be sent to the SCW Delaying Basins and released to the offsite public. The first is from a leak in the cooling coils in a tank through which radioactive solution enters the SCW return system. The second is a transfer error in which a jumper, probably a flexible jumper, is connected to an unused cooling water outlet nozzle that allows the contents of a canyon tank to be released to the SCW System. Without controls to prevent this event, the radioactive solution in the canyon tank could be released to the offsite surface waterways, including the Savannah River, and result in a significant radiological consequence to the offsite public. There are no controls that will mitigate this event: therefore, only preventive controls are available to reduce the event risk. LCO 3.2.1 and the DF of the delaying basin support this SAC.

8.4.5.19.3 FUNCTIONAL REQUIREMENTS

The requirement is to ensure that the SCW released to the offsite surface waterways has alpha and beta-gamma levels each less than or equal to 8,000 d/m/ml. The manual sample required by this SAC ensures that the water activity level is below the minimum limits for a direct release to the surface waterways and if not below the limit ensures that contaminated water is sent to the Effluent Treatment Project for treatment. The functional requirement of this control is to manually sample and analyze the SCW to prevent an inadvertent release of contaminated water to the offsite surface waterways.

8.4.5.19.4 SPECIFIC ADMINISTRATIVE CONTROL EVALUATION

There are ACs which help prevent inadvertently connecting the wrong jumper to the unused cooling water nozzles on the canyon walls. However, there are no controls, other than the DF of the cooling coil material of construction, that will prevent a leak from developing in the cooling coils.

There are SC and SS SSCs on the SCW System to automatically monitor for increased radioactivity in the cooling water and divert the water to the ETF. It is possible that contamination in the cooling water may be below the minimum detectable limits of the monitors. The purpose of 5.7.2.10.g is to provide a manual back up to the cooling water monitors to ensure that any radioactive solution containing alpha or beta-gamma levels greater than 8000 d/m/ml is detected before the water is released offsite. This SAC combined with other SACs and with the credited instrumented systems ensure that an inadvertent release of the SCW System to the offsite surface waterways is a BEU event. This AC is the last control in the control set that makes the release to the surface waterways a BEU event. This SAC along with SAC 5.7.2.10.a, LCO, and DF provide controls to ensure that an inadvertent transfer or cooling coil leak to the SCW System with a subsequent release to the offsite surface waterways is a BEU event. This is an SC SAC and redundancy is not available since only one sample is required to verify if the activity in the cooling water is below the minimum level that will allow release to the offsite waterways. The LCO and DF provide additional support, independence, and diversity of controls necessary to provide an adequate level of protection to prevent the accident. The RadCon Operators in H-Canyon are adequately trained and qualified to perform the sampling and test requirements of this SAC without any additional qualification or analysis.

8.4.5.20 Process Controls that Address Inadvertent Transfers and Releases, and Loss of Containment - Loss of Containment Uncontrolled Reaction on H–Canyon Third Level or in Outside Facilities H–Area (TSR 5.7.2.10.h)

Ferrous sulfamate piping changes shall ensure that this chemical cannot be inadvertently mixed with concentrated nitric acid either in the canyon third level or OF–H.

8.4.5.20.1 SAFETY FUNCTION

This AC is designated as an SAC because it serves an SS safety function that cannot be performed by an engineered safety system. The piping configuration can be changed during normal canyon operations and the piping configuration must be controlled carefully to prevent mixing incompatible chemicals. The SS safety function prevents an inadvertent mixing of chemicals that could lead to an uncontrolled reaction in either the Third Level of H–Canyon or OF–H.

8.4.5.20.2 SPECIFIC ADMINISTRATIVE CONTROL DESCRIPTION

Mixing concentrated nitric acid (64% nitric acid) and 40% ferrous sulfamate, will lead to a vigorous uncontrolled reaction that may release a copious quantity of chemical vapors (e.g.,

NOx) that could present a life–threatening situation to the facility worker in the immediate vicinity of where the reaction occurs. These type events have occurred in H–Canyon as the result of adding the wrong chemicals to a tank. The reaction between concentrated nitric acid and 40% ferrous sulfamate are the primary reactions of concern, because these reactions generate the most NOx fumes. The piping route configuration is completed and controlled by facility personnel. There are no automated systems that will prevent changing the piping configuration that will allow the inadvertent mixing of the chemicals. The SAC helps prevent the inadvertent mixing of the incompatible chemicals to prevent the uncontrolled reaction. There are no controls that will mitigate this event; therefore, only preventive controls are available to reduce the event risk.

8.4.5.20.3 FUNCTIONAL REQUIREMENTS

The requirement is to ensure that the piping routes for the ferrous sulfamate transfer lines are under configuration control to ensure that piping route changes are not made that will allow the inadvertent mixing of concentrated nitric acid and 40% ferrous sulfamate. The functional requirement of this control is to prevent an injury to the facility worker from the inadvertent mixing of incompatible chemicals that could lead to the uncontrolled reaction.

8.4.5.20.4 SPECIFIC ADMINISTRATIVE CONTROL EVALUATION

Control of the ferrous sulfamate piping configuration and the requirement to independently verify the valve lineups (SAC 5.7.2.10.e) for the chemical transfers help prevent the inadvertent mixing of the incompatible chemicals. The configuration control of the piping as implemented by this SAC and the related SAC on independent verification of valve lineups minimize the risk of inadvertently mixing the incompatible chemicals.

8.4.5.21 Process Controls that Address Inadvertent Transfers and Releases, and Loss of Containment - Loss of Containment Ruthenium Volatilization (TSR 5.7.2.10.i)

For offsite reactor fuels processed, limit the Ru-106 to 136 Ci per Dissolver charge.

8.4.5.21.1 SAFETY FUNCTION

This AC is designated as an SAC because it serves an SS safety function that cannot be performed by an engineered safety system. The SS safety function is to prevent a potential ruthenium volatilization event that could cause a ^{106}Ru release above that currently analyzed in the SAR accident analysis. There is no SSC that can ensure that the fuel charged to the dissolver contains less than the specified amount of ^{106}Ru. Therefore, this control must be implemented by an SAC with Engineering personnel verifying that the fuel does not exceed the specified ^{106}Ru content prior to charging the fuel to the dissolver(s).

8.4.5.21.2 SPECIFIC ADMINISTRATIVE CONTROL DESCRIPTION

Certain conditions in the Dissolvers and Head End can create highly oxidizing conditions. If any ruthenium is present in the dissolver, the highly oxidizing conditions can cause the ruthenium to very rapidly oxidize to the very highly volatile RuO_4 compound. The RuO_4 is then released as a gaseous product through the dissolver off gas system or through the sand filters and the Canyon Exhaust Stack. The ruthenium, as a radioactive isotope in an airborne release, can have significant consequences to the onsite worker so that SS controls are required to prevent or mitigate the event. The SAR accident analysis assumes that the SRS reactor fuel being processed when the accident analysis was completed contained a maximum of 136 Ci ^{106}Ru based on the cooling time of the fuel when it was being processed in the canyon. Ruthenium volatilization reactions have occurred and resulted in airborne releases of the volatile RuO_4 (F–Area). Because of the potential to have the highly oxidizing conditions during both normal and abnormal H–Canyon operations, the SAR assumed the event would occur if offsite fuels containing ruthenium were processed. A control was developed to protect the accident analysis assumption of 136 Ci ^{106}Ru and to mitigate (minimize) the potential consequences of a ruthenium volatilization event in future processing campaigns.

8.4.5.21.3 FUNCTIONAL REQUIREMENTS

The requirement is to protect the SAR consequence analysis assumption of a maximum of 136 Ci ^{106}Ru in any future irradiated fuel processed in H–Canyon. The control ensures that any future irradiated fuel that is processed in H–Canyon will be reviewed by the USQ process to ensure that the batching operation for a dissolver charge does not contain greater than 136 Ci ^{106}Ru. Note that it is assumed that there will not be any ^{103}Ru in the fuel to be processed. If ^{103}Ru is present, the combined consequences of the ^{103}Ru and ^{106}Ru must be less than the consequences associated with a maximum release of 136 Ci ^{106}Ru.

8.4.5.21.4 SPECIFIC ADMINISTRATIVE CONTROL EVALUATION

This control is implemented prior to the fuel being charged to the dissolver. By verifying that the fuel to be processed contains less than 136 Ci ^{106}Ru in a single dissolver batch, the source term assumption used in the accident analysis is protected. This limits the potential radiological consequences to the onsite worker from a ruthenium volatilization accident.

8.4.5.22 Deleted.

8.4.5.23 Deleted

8.4.5.24 Process Controls Required to Prevent Organic Vapor and Red Oil Explosions - Explosion – TBP–Nitric Acid Runaway Reaction (TSR 5.7.2.11.a)

All acidic evaporator feed that has been in contact with any organic shall be processed through a decanter prior to evaporation.

8.4.5.24.1 SAFETY FUNCTION

This AC is designated as an SAC because it serves an SS safety function that cannot be performed by an engineered safety system. The safety function is to prevent the potential for a TBP–Nitric Acid Runaway Reaction (red oil explosion) in the canyon evaporators. This SAC works in conjunction with active and passive SSCs to prevent a red oil explosion in the evaporators. This SC safety function minimizes the potential for a red oil explosion in the evaporators by limiting the amount of organic (TBP) that can be fed to the evaporators (Section 8.3.2.2.1).

8.4.5.24.2 SPECIFIC ADMINISTRATIVE CONTROL DESCRIPTION

A red oil explosion occurs when TBP and nitric acid are heated above a minimum temperature without sufficient vent capability to remove the gaseous products formed during the process which rapidly increases the pressure. Since the evaporators are heated and organic material is typically present in the evaporators, the goal is to minimize the amount of organic that can be fed to the evaporators. Limiting the amount of organic fed to the evaporators limits the mass of material available for a runaway reaction. The decanters separate the aqueous and organic phases so that only the aqueous phase (with limited entrained organic material) is fed to the evaporators. This SAC ensures that any aqueous solution that has been in contact with organic solutions, is passed through a decanter prior to sending the aqueous solution to the evaporator. There are no automatic or passive SSCs that control the process flow to ensure this control is met, therefore, the SAC must be implemented to ensure decanting of the solutions prior to evaporation to minimize the potential for introduction of organics into the evaporator that could result in a red oil explosion.

8.4.5.24.3 FUNCTIONAL REQUIREMENTS

The requirement is to ensure that all feed solutions to acidic evaporators in which organic and aqueous have been in contact are processed through a decanter prior to being fed to the evaporators. The functional requirement is to provide, via procedures, a positive method to minimize the introduction of organic (TBP) into the H–Canyon evaporators.

8.4.5.24.4 SPECIFIC ADMINISTRATIVE CONTROL EVALUATION

This SAC ensures that the potential for feeding bulk quantities of organic solution to the evaporator is minimized. This reduces the potential for a red oil explosion in the evaporator. This SAC is implemented by H–Canyon operating procedures. This SAC is one of a control set that minimizes the potential for a red oil explosion in the evaporator. Other controls that prevent a red oil explosion are the LCO on temperature controls and interlocks (LCO 3.1.4) for the evaporators. Mitigative controls include the Canyon Building Structure and the Canyon Exhaust System and related LCOs and DFs. The combined controls are effective in preventing or minimizing a red oil explosion in the H–Canyon evaporators.

8.4.5.25 Process Controls Required to Prevent Organic Vapor and Red Oil Explosions - Explosion – TBP–Nitric Acid Runaway Reaction (TSR 5.7.2.11.b)

Continuous layers of organic shall not be fed to the ARU evaporator.

8.4.5.25.1 SAFETY FUNCTION

This AC is designated as an SAC because it serves an SS safety function that cannot be performed by an engineered safety system. The safety function is to prevent the potential for a TBP–Nitric Acid Runaway Reaction (red oil explosion) in the ARU. This SAC works in conjunction with active SSCs to prevent a red oil explosion in the ARU evaporator. This SS safety function minimizes the potential for a red oil explosion in the ARU by limiting the amount of organic (TBP) that can be fed to the ARU (Section 8.3.2.2.1).

8.4.5.25.2 SPECIFIC ADMINISTRATIVE CONTROL DESCRIPTION

A red oil explosion occurs when TBP and nitric acid are heated above a minimum temperature without sufficient vent capability to remove the gaseous products formed during the pressure. Since the ARU is heated and organic material may be present in the ARU, the goal is to minimize the amount of organic that can be fed to the ARU. Limiting the amount of organic fed to the ARU limits the mass of material available for the runaway reaction. The solution fed to the ARU is transferred from inside the canyon to the ARU feed tank. There is typically some small amount of entrained organic in the solutions transferred to the ARU for processing. Additionally, it is possible for a process upset condition to allow a large amount of organic to be transferred to the ARU feed tank. Any entrained or bulk organic will separate in the ARU feed tanks (essentially decant to separate the two solutions) and form an organic layer on top of the aqueous solution. The only practical method of determining if there is any appreciable organic in the ARU feed tank is to periodically inspect the inside of the tank to determine if there is an organic layer on top of the aqueous layer. If a continuous layer of organic is detected during the annual inspections, the organic layer is removed from the tanks by flushing or skimming. This SAC ensures that little or no organic material is fed to the ARU and thereby minimizes the potential for a red oil explosion in the ARU. There are no automatic or passive SSCs that control the process flow to ensure this control is met, therefore, the SAC must be implemented to ensure no significant quantity of organic material is present in the solution fed to the ARU.

8.4.5.25.3 FUNCTIONAL REQUIREMENTS

The requirement is to detect via annual inspections any significant (continuous layer) organic material in the ARU feed tanks and to remove the organic, by flushing or skimming, prior to feeding the solution to the ARU for evaporation. The functional requirement is to provide, via procedures, a positive method to detect and remove any organic in the feed tank to minimize the introduction of organic (TBP) into the ARU.

8.4.5.25.4 SPECIFIC ADMINISTRATIVE CONTROL EVALUATION

This SAC ensures that little or no organic is fed to the ARU, which minimizes the potential for a red oil explosion. This SAC is implemented by H–Canyon procedures. This SAC is one of a control set that minimizes the potential for a red oil explosion in the ARU. The other control that prevents a red oil explosion in the ARU is the LCO on temperature controls interlock and the Low Liquid Level Pump Cutoff Interlock on the ARU Feed Tank (LCO 3.1.12). The combined controls are effective in preventing or minimizing a red oil explosion in the ARU.

8.4.5.26 Process Controls Required to Prevent Organic Vapor and Red Oil Explosions - Segregated Solvent Gamma Activity Limit (TSR 5.7.2.11.d)

Segregated Solvent Gamma Activity shall not exceed the following limits: First Cycle–3.0E+8 d/m/ml; Second Product Cycle–1.0E+7 d/m/ml; and Second Uranium Cycle–2.0E+7 d/m/ml.

8.4.5.26.1 SAFETY FUNCTION

This AC is designated as an SAC because it serves an SS safety function that cannot be performed by an engineered safety system. The safety function of the SAC is to protect the source term used in the consequence analysis for organic fires in the Segregated Solvent Tanks in OF–H and a release of the segregated solvent during NPH events such as an earthquake or tornado. The accident analysis determined the accident consequences based on the maximum expected inventory in the Segregated Solvent Tanks. To protect the inventory assumed in the accident analysis, a control must be in place to limit the radionuclide concentrations in the segregated solvent in OF–H

8.4.5.26.2 SPECIFIC ADMINISTRATIVE CONTROL DESCRIPTION

Solvent that has been used in the solvent extraction cycles in the canyons is washed and sent to the Segregated Solvent Area of OF–H for further processing and temporary storage. The accident analysis assumes that a fire can occur that involves the organic liquid in the Segregated Solvent Tanks. Additionally, the segregated solvent can be released from tank failures during NPH events such as a tornado or an earthquake. Input to the accident analysis assumed the segregated solvent gamma activity limits shall be maintained less than or equal to the following limits: 1st Cycle 3.0E+8 d/m/ml; 2nd Product Cycle 1.0E+7 d/m/ml; and 2nd Uranium Cycle 2.0E+7 d/m/ml (Ref. 101). It is noted that the 2nd Product Cycle solvent is not sampled as the

system is stagnant and not in use at this time. H-Canyon operating procedures require quarterly samples of the other segregated solvent systems be taken and compared against the procedural gamma activity limits. The procedural limits are well below the accident analysis limits. Any increases in the accident analysis activity limits will increase the accident consequences above those reported in the SAR. Increasing the activity limits in these tanks can increase the consequences to the facility worker, the onsite worker, and the offsite public.

8.4.5.26.3 FUNCTIONAL REQUIREMENTS

The requirement is to protect the accident analysis input limits by ensuring the inventory of the material in the Segregated Solvent Tanks is controlled to the maximum concentrations noted in the SAC. The functional requirement is to control the inventory limits and minimize the consequences to the facility worker, the onsite worker, and the offsite public.

8.4.5.26.4 SPECIFIC ADMINISTRATIVE CONTROL EVALUATION

This SAC ensures that the activity limit assumed in the accident analysis is protected. There is no automatic control or SSC that will ensure that the solvent sent to the Segregated Solvent System in OF–H is below the limits assumed in the accident analysis. This control is an effective control to protect the inventory limits assumed in the SAR accident analysis.

8.4.5.27 Process Controls Required to Prevent Organic Vapor and Red Oil Explosions - Explosion – TBP–Nitric Acid Runaway Reaction (TSR 5.7.2.11.g)

An inspection shall be completed every 18 months to ensure the red oil nozzle vents are properly installed. The tanks within H-Canyon that contain ROV nozzles to be inspected are: Tanks 12.6, 12.8, 13.5, 13.8, 14.6, 14.8, 15.1, and 15.3.

8.4.5.27.1 SAFETY FUNCTION

This AC is designated as an SAC because it serves an SS safety function that cannot be performed by an engineered safety system. The safety function is to ensure that the passive vents (called ROV) are present and properly installed on designated tanks in H–Canyon to prevent the potential for a TBP–Nitric Acid Runaway Reaction (red oil explosion) in the tanks. This SAC requires the tanks to be inspected to ensure proper installation of the passive ROVs to prevent a red oil explosion. This SS safety function minimizes the potential for a red oil explosion in the tanks by providing a passive vent to relieve the pressures generated during a runaway TBP–nitric acid reaction (Section 8.3.2.2.1).

8.4.5.27.2 SPECIFIC ADMINISTRATIVE CONTROL DESCRIPTION

A red oil explosion occurs when TBP and nitric acid are heated above a minimum temperature without sufficient vent capability to remove the gaseous products formed during the reactions.

Releasing the gaseous products relieves the pressure in the system and helps keep the temperature below the runaway reaction initiation temperature. Some H–Canyon tanks have the capability to be heated and contain significant quantities of organic and aqueous (nitric acid) solutions. Research has shown that if sufficient venting capability is available to relieve the pressure and release the gaseous products formed during the reactions that it is very difficult, if not impossible, to initiate a runaway red oil reaction. To ensure sufficient vent capability is available, designated H–Canyon tanks have special covers, the ROV, placed over unused nozzles on the tanks. The always open nozzle in conjunction with other passive vents, e.g., the liquid overflow line, ensure that sufficient vent capability is available to relieve the pressures generated during a red oil reaction. This prevents a pressure increase, which would cause higher temperatures, an increased reaction rate, and a potential explosion. To ensure that the ROVs remain in place on the designated tanks, an inspection of the ROVs is conducted every 18 months to ensure they are properly installed on the designated tanks. Ensuring the ROVs are in place, via the inspection, ensures sufficient passive vent area is available to minimize the potential for a red oil explosion in the canyon tanks. The inspection frequency is based on engineering judgment and canyon operational history.

8.4.5.27.3 FUNCTIONAL REQUIREMENTS

The requirement is to verify via inspections every 18 months that the ROVs are properly installed and have not been removed from the designated tanks. The functional requirement is to provide, via procedures, a positive method to ensure the ROVs remain in place to provide the minimum required passive vent area for the designated tanks.

8.4.5.27.4 SPECIFIC ADMINISTRATIVE CONTROL EVALUATION

This SAC ensures that the minimum passive vent area for the designated tanks is available. The 18 month inspection ensures that the ROVs that are necessary to provide the passive vent area are properly installed on the designated tanks. Ensuring the availability of the minimum passive vent area on the tanks, minimizes the potential for a red oil explosion in the tanks. This SAC is implemented by H–Canyon procedures. This SAC is one of a control set that minimizes a red oil explosion in Tanks 12.5, 12.8, 13.5, 13.8, 14.6, 14.8, 15.1, and 15.3. This SAC ensures the ROV nozzles, which are a credited DF, are present and properly functioning. This SAC combined with the ROV nozzle DF are effective in preventing or minimizing a red oil explosion in the canyon tanks.

8.4.5.28 Process Controls Required to Prevent Organic Vapor and Red Oil Explosions - Explosion – TBP–Nitric Acid Runaway Reaction (TSR 5.7.2.11.j)

All aqueous feed to a caustic evaporator (e.g., the GPE) shall have a pH greater than or equal to 7.0 except during acid flush.

8.4.5.28.1 SAFETY FUNCTION

This AC is designated as an SAC because it serves an SS safety function that is presently not performed by an engineered safety system. The safety function is to ensure that the potential for a red oil explosion in a caustic evaporator (i.e., the GPE) is minimized by ensuring that nitric acid is not present in the evaporator (i.e., the aqueous feed pH is greater than or equal to 7.0). This SS safety function minimizes the potential for a red oil explosion in the GPE by preventing the mixing of nitric acid and TBP in the evaporators (Section 8.3.2.2.1).

8.4.5.28.2 SPECIFIC ADMINISTRATIVE CONTROL DESCRIPTION

A red oil explosion occurs when TBP and nitric acid are heated above a minimum temperature without sufficient vent capability to remove the gaseous products formed during the reactions. A red oil reaction cannot occur in a basic or caustic environment even if TBP is mixed with the caustic solution and the temperature is greater than the initiation temperature for a runaway reaction involving TBP and nitric acid. By ensuring that only a caustic solution (pH greater than or equal to 7.0) is fed to the GPE during normal operations, the conditions necessary for a red oil reaction cannot occur and the subsequent explosion is prevented. Note that during cleaning of the GPE, an acid flush is used to clean the evaporator. There will be very little if any TBP present during the flush cycle and the temperature will be controlled to below the runaway reaction initiation temperature. This SAC is effective in ensuring only caustic solutions are fed to the GPE because the solution is confirmed to be a caustic solution in the feed tank before it is fed to the evaporators. This SAC ensures that only a known solution is in the evaporator feed tanks prior to startup of the evaporator operations. Therefore, the SAC must be implemented to ensure that only caustic solutions are fed to the caustic evaporators.

8.4.5.28.3 FUNCTIONAL REQUIREMENTS

The requirement is to ensure the pH of the aqueous feed solution to the GPE is a caustic solution with a pH greater than or equal to 7.0 during normal evaporator operations. The functional requirement is to provide, via procedures, a positive method to ensure the solutions in the caustic evaporator feed tanks contains only caustic solutions during normal operations. Note that this SAC does not apply during evaporator cleaning and flushing operations when nitric acid will be used to flush the evaporator.

8.4.5.28.4 SPECIFIC ADMINISTRATIVE CONTROL EVALUATION

This SAC ensures that the conditions necessary for a red oil explosion cannot be developed in the GPE. A red oil reaction cannot occur when TBP is heated in a caustic (pH > 7.0) solution. Ensuring only a caustic solution is fed to the evaporator minimizes the potential for a red oil explosion. This SAC is implemented by H–Canyon procedures.

8.4.5.29 Process Controls Required to Prevent Organic Vapor and Red Oil Explosions - Explosion – TBP–Nitric Acid Runaway Reaction (TSR 5.7.2.11.k)

Limit the single transfer amount of pure TBP into the canyon to 750 pounds.

8.4.5.29.1 SAFETY FUNCTION

This AC is designated as an SAC because it serves an SC safety function that cannot be performed by an engineered safety system. The safety function is to ensure that the potential for a red oil explosion involving greater than 3,000 pounds of TBP inside H–Canyon is prevented. This SC safety function minimizes the potential for a red oil explosion involving greater than 3,000 pounds of TBP by limiting the amount of bulk pure TBP to 750 pounds that can be transferred into the canyon in a single transfer (Section 8.3.2.2.1).

8.4.5.29.2 SPECIFIC ADMINISTRATIVE CONTROL DESCRIPTION

A red oil explosion occurs when TBP and nitric acid are heated above a minimum temperature without sufficient vent capability to remove the gaseous products formed during the reactions. A red oil explosion involving greater than 3,000 pounds of TBP is postulated to have sufficient energy to cause a failure of the canyon roof and wall structure. The only possible mechanisms to have greater than 3,000 pounds of TBP in a single process vessel is to use a 30% TBP solution in the process areas or to transfer more than 3,000 pounds of bulk TBP into the canyon. All of the 30% TBP solution has been removed from H–Canyon and the process (i.e., 2nd Product Cycle) that uses 30% TBP is not authorized for operation. This removes the potential for accumulating more than 3,000 pounds of TBP in a single vessel from operation of the 2nd Product Cycle. A small amount of TBP is lost during normal operations of the 1st Cycle and 2nd Uranium Cycle. These cycles use a nominal 7.5% TBP solution and it is physically impossible to accumulate more than 3,000 pounds of TBP (at 7.5 vol%) in any single process vessel associated with these cycles. However, because of the routine TBP losses, additional TBP must be brought into the canyon to replenish the TBP lost during operations. The makeup TBP is transferred into H–Canyon as pure TBP in a bulk transfer. By limiting the amount of bulk TBP that can be transferred from the OF–H tanks to inside the canyon, it will take at least four (4) independent failures (separated by time and space) by both the OF–H and H–Canyon operators to allow four transfers in a very short time such that 3,000 pounds of TBP could accumulate in a single H–Canyon process vessel. The bulk TBP is transferred into the canyon infrequently on an as needed basis. Because of the infrequent nature of the bulk TBP transfers and the transfer routes, no SSCs have been identified that would be effective in preventing transferring greater than 750 pounds of TBP in a single transfer. This SAC is effective in preventing transferring greater than 3,000 pounds of TBP into the canyon because it requires verification of the amount to be transferred prior to initiation of the transfer. Therefore, the SAC must be implemented to limit the amount of bulk TBP to be transferred.

8.4.5.29.3 FUNCTIONAL REQUIREMENTS

The requirement is to ensure that greater than 3,000 pounds of TBP cannot accumulate in a single tank inside H–Canyon. The functional requirement is to provide, via procedures, a positive method to limit the amount of bulk TBP transferred in a single transfer to only 25% of the 3,000 pound limit such that multiple transfers and errors must occur before 3,000 pounds of TBP can accumulate in any single canyon vessel. The requirement is to ensure prior to transferring the bulk TBP from OF–H to the canyon tanks that only a known mass of less than or equal to 750 pounds of TBP will be transferred.

8.4.5.29.4 SPECIFIC ADMINISTRATIVE CONTROL EVALUATION

This SAC ensures that the conditions necessary for a red oil explosion involving greater than 3,000 pounds of TBP inside a canyon vessel cannot be obtained. The SAC, which is implemented prior to the transfer of the bulk TBP, limits the mass of TBP that can be transferred to 25% of the 3,000 pound limit (i.e., 750 pounds). This SAC in conjunction with the DFs of the air gaps and physical disconnects on the potential 30 vol% TBP transfer routes ensure that conditions are not credible inside the canyon such that 3,000 pounds of TBP can accumulate in a single process vessel. There are no active SSCs that will prevent this scenario. The DFs and this SAC prevent introduction and accumulation of greater than 3,000 pounds of TBP into a single canyon vessel. This SAC is implemented by H–Canyon and OF–H procedures.

8.4.5.30 Flammable Gas/Vapor Dilution Process Controls - Hydrogen Deflagration in the Dissolver (TSR 5.7.2.12.a)

A minimum nitric acid concentration of 0.3M shall be maintained in the dissolver at all times when radioactive materials are present to prevent excessive hydrogen evolution.

8.4.5.30.1 SAFETY FUNCTION

This AC is designated as an SAC because it serves an SS safety function that cannot be performed by an engineered safety system. The safety function is to ensure that a minimum nitric acid concentration is maintained to ensure the hydrogen generation rate is below that assumed in the accident analysis. There are instruments (e.g., conductivity meters) that can measure the nitric acid concentration, however, it is not practical to use them in the H–Canyon dissolvers. This control is implemented and verified by ensuring that both the HNO_3 concentration and amount in the Third Level Head Tanks is above the level that will ensure that the acidity endpoint concentration remains $\geq$ 0.3M in the dissolver at the end of the dissolution process. This SS safety function minimizes the potential for excessive H_2 generation that could lead to a hydrogen deflagration in the H–Canyon dissolvers (Section 8.3.2.2.3).

8.4.5.30.2 SPECIFIC ADMINISTRATIVE CONTROL DESCRIPTION

Hydrogen is generated in the dissolvers from chemical reactions and by the radiolysis of water. The chemically generated H_2 occurs primarily in the dissolvers from the dissolution of the aluminum cladding on the fuel. Hydrogen generation from the radiolysis of water occurs in all the H–Canyon and OF–H process vessels where there is radioactive material in contact with water. In the dissolvers the chemically generated H_2 is the primary concern. The acid molarity (concentration) is an important factor in limiting H_2 generation rates from chemical reactions. As the acid concentration decreases, more free H_2 is generated based on the reactions occurring in the dissolver. Some of the hydrogen ions generated will react with any free NO_3^- radicals in the solution. Controlling the acid concentration ensures a minimum nitrate ion concentration, which provides the nitrate ions to react with the H^+ ion. This helps ensure the amount of H_2 actually generated is less than that calculated in the hydrogen calculations. This control ensures that the conservative hydrogen generation calculation used for chemically generated H_2 is protected.

8.4.5.30.3 FUNCTIONAL REQUIREMENTS

The requirement is to ensure the acid concentration in the H–Canyon dissolvers remains above a minimum value to limit the amount of H_2 released in the reactions. By ensuring a minimum HNO_3 concentration is maintained, the SAC reduces the potential to exceed the LFL of a hydrogen–air mixture and thereby helps prevent a hydrogen deflagration in the dissolvers. The functional requirement is to provide, via procedures, a minimum nitric acid concentration in the dissolvers when radioactive material is present.

8.4.5.30.4 SPECIFIC ADMINISTRATIVE CONTROL EVALUATION

This SAC ensures that a positive mechanism exists to minimize the potential for a hydrogen deflagration in the H–Canyon dissolvers. This SAC is implemented by H–Canyon operating procedures. This SAC and SACs 5.7.2.12.b, 5.7.2.12.d, and 5.7.2.12.e, are effective in preventing or minimizing the consequences of a hydrogen deflagration and release of radioactive material in the H–Canyon dissolvers.

8.4.5.31 Flammable Gas/Vapor Dilution Process Controls - Hydrogen Deflagration in the Canyon Process Tanks (TSR 5.7.2.12.b)

Any material charged to the dissolver shall have hydrogen generation rates less than or equal to the 3,650 day cooled Mk–22 fuel.

8.4.5.31.1 SAFETY FUNCTION

This AC is designated as an SAC because it serves an SS safety function that cannot be performed by an engineered safety system. The safety function is to ensure that any fuel charged to the dissolver and processed through H–Canyon and OF–H has a H_2 generation rate equal to or

less than Mk–22 fuel that has been cooled for a minimum of 3,650 days. This control is implemented prior to bringing the fuel into H–Canyon for dissolution and processing. This SS safety function minimizes the potential for excessive H_2 generation that could lead to a hydrogen deflagration in the H–Canyon process vessels (Section 8.3.2.2.3).

8.4.5.31.2 SPECIFIC ADMINISTRATIVE CONTROL DESCRIPTION

The hydrogen generation rate from radiolysis is primarily influenced by the high energy gamma radiation from the fission products and the alpha radiation from the actinides. With fuel that has cooled a minimum of 10 years, many of the fission products have decayed to a negligible value and their contribution to the hydrogen generation rate from the radiolysis of water is negligible. The current H_2 generation rates for the analysis in the SAR is based on Mk–22 fuel that has cooled for a minimum of 10 years (3,650 days) (Ref. 101). Reference 101 determines the amount of time that it would take for H_2 gas to build up to 1.0% by volume (25% LFL) in the vapor space above the canyon process vessels in the case of a PVV system failure or shutdown. It also supports the response time of 9 hours in TSR LCO 3.3.2 for the PVV system based on the H_2 generation rate for the 10-year cooled fuel. Using the maximum source terms for 10-year cooled fuel, Reference 101 shows that the required time between purges can be up to 16 hours and still remain within safe operating conditions. With the radiolytic generation of hydrogen and generation of ammonia from waste neutralization (organics are restricted by SAC 5.7.2.12.j), a conservative time to 25% of the CLFL is 9 hours (Ref. 90). With the radiolytic generation of hydrogen and with the presence of organic vapor (ammonia is restricted by SAC 5.7.2.12.i), a conservative time to 25% of the CLFL is 19 hours (Ref. 100). By ensuring that any irradiated fuel to be processed has a H_2 generation rate equivalent to or less than the H_2 generation rate of 10 year cooled Mk–22 fuel, the H_2 generation rate from radiolysis is protected. This SAC protects an important assumption in the SAR analysis regarding the H_2 generation rate and the time to reach the LFL of a hydrogen–air mixture in the H–Canyon and OF–H process vessels. This control helps ensure the amount of H_2 actually generated is less than that calculated in the hydrogen calculations.

8.4.5.31.3 FUNCTIONAL REQUIREMENTS

The requirement is to ensure that prior to introduction of the fuel feedstock into H–Canyon, any irradiated fuel has been verified to have a H_2 generation rate equal to or less than Mk–22 fuel that has been cooled for at least 3,650 days. By ensuring the H_2 generation rate of the fuel to be processed is less than that analyzed in the accident analysis (10 year cooled Mk–22 fuel), the SAC reduces the potential to exceed the LFL of a hydrogen–air mixture and thereby helps prevent a hydrogen deflagration in the process vessels.

8.4.5.31.4 SPECIFIC ADMINISTRATIVE CONTROL EVALUATION

This SAC ensures that a positive mechanism exists to minimize the potential for a hydrogen deflagration in H–Canyon and OF–H. This SAC is implemented by H–Canyon operating procedures. The PVV System (LCO 3.3.2) and this SAC and SACs 5.7.2.12.a, 5.7.2.12.d, and

5.7.2.12.e, are effective in preventing or minimizing the consequences of a hydrogen deflagration and release of radioactive material in the H–Canyon process vessels.

8.4.5.32 Hydrogen Dilution Process Controls - Hydrogen Deflagration in the Containers Stored in Outside Facilities H–Area (TSR 5.7.2.12.c)

When stored at the OF-H facility, Hanford Containers, HM–Trailers or similar type containers (e.g., Consani Containers) that contain material that will generate hydrogen by radiolysis shall be HEPA or equivalent filter vented or purged annually. If installed, the HEPA or equivalent filters shall be inspected or replaced annually.

8.4.5.32.1 SAFETY FUNCTION

This AC is designated as an SAC because it serves an SS safety function that cannot be performed by an engineered safety system. The safety function is to ensure that sufficient H_2 cannot accumulate in the containers used to store uranyl nitrate solutions in OF–H to exceed the LFL of a hydrogen–air mixture, which could result in a H_2 deflagration. This SS safety function minimizes the potential for a hydrogen deflagration in the identified uranyl nitrate storage containers in OF–H (Section 8.3.2.2.3).

8.4.5.32.2 SPECIFIC ADMINISTRATIVE CONTROL DESCRIPTION

Hydrogen is generated by the radiolysis of water in the containers used to store uranyl nitrate in OF–H. These containers are, for all practical purposes, closed systems with little potential for any H_2 generated to escape the containers. The H_2 concentration can increase until it exceeds the LFL of a hydrogen–air mixture. If sufficient H_2 is present to exceed the LFL and an ignition source is available, a hydrogen deflagration can occur. The containers are not connected to an active credited ventilation system, therefore, it is assumed that the generated H_2 accumulates in the containers. Because the solutions in the containers consist primarily of ^{235}U or ^{238}U, the H_2 generation rate is very low and it will take several years to reach the LFL of the hydrogen–air mixture even if the containers were completely sealed systems. Since there is no credited or available active ventilation or purge system, a passive vent or periodic purge is needed to ensure that 25% of the LFL is not exceeded. The annual purge or passive vent inspection/replacements required by this SAC are as effective in ensuring the H_2 level is always less than 25% of the LFL as an active ventilation system considering the very low H_2 generation rate. This control is a preventive control to prevent a H_2 deflagration in the containers.

8.4.5.32.3 FUNCTIONAL REQUIREMENTS

The requirement is to ensure that a passive vent is always available (i.e., HEPA filters are inspected or replaced annually) or that the containers are purged on an annual basis. The purpose is to prevent exceeding 25% of the LFL in the containers. The functional requirement is to provide the means (e.g., passive vent or annual purge) to ensure that a H_2 deflagration will not occur.

8.4.5.32.4 SPECIFIC ADMINISTRATIVE CONTROL EVALUATION

This SAC ensures that frequency of a H_2 deflagration in the containers is minimized by limiting H_2 accumulation either through passive filter venting or purging on an annual basis. This SAC is effective in preventing a hydrogen deflagration and release of radioactive material from the identified containers.

8.4.5.33 Hydrogen Dilution Process Controls - Hydrogen Deflagration in the Dissolver (TSR 5.7.2.12.d)

The dissolver charging hatch shall not be bolted, weighted, or fastened down in such a manner as to prevent lifting to relieve excessive pressure in the dissolver.

8.4.5.33.1 SAFETY FUNCTION

This AC is designated as an SAC because it serves an SS safety function to ensure a passive relief system is available to rapidly relieve the pressure if a H_2 deflagration occurs in the dissolver. The safety function is to ensure that in the event of a H_2 deflagration in the dissolver that the charging hatch will lift relieving the pressure and allowing the airborne radionuclides to release to the Hot Canyon atmosphere. This SS safety function minimizes the potential consequences from a hydrogen deflagration in the H–Canyon dissolvers (Section 8.3.2.2.3).

8.4.5.33.2 SPECIFIC ADMINISTRATIVE CONTROL DESCRIPTION

If sufficient H_2 is present to exceed the LFL and an ignition source is available, a hydrogen deflagration can occur in the dissolvers. The dissolvers are not connected to the PVV System or directly to the Canyon Exhaust System. The off–gases from the dissolution operation are released directly into the base of the 291–H Stack such that the dissolver off–gases bypass the accident analysis credited Canyon Exhaust System and the sand filters. To minimize the potential consequences of a hydrogen deflagration in the dissolver, the released radionuclides must go through the sand filter. This SAC ensures that the dissolver charging hatch will lift during a deflagration in the dissolver, thereby releasing the airborne radionuclides to the Hot Canyon atmosphere. The Hot Canyon atmosphere is exhausted through the Canyon Exhaust System and the sand filters. By ensuring the radioactive material released to the canyon atmosphere is filtered by the sand filter, the source term that is released from the top of the stack is significantly reduced and the accident consequences to the collocated onsite worker and the offsite public are reduced. This control is a mitigative control to minimize the potential consequences of a H_2 deflagration in the dissolver.

8.4.5.33.3 FUNCTIONAL REQUIREMENTS

The requirement is to ensure the dissolver charging hatch is not bolted, weighted or fastened down when radioactive material is in the dissolver. The functional requirement is to ensure that the dissolver charging hatch is free to lift during a potential H_2 deflagration in the dissolver. The

functional requirement is to ensure that any airborne radioactive material is released to the Hot Canyon atmosphere instead of being released from the dissolver off–gas system. This ensures that releases from the dissolver after a deflagration are filtered by the sand filter, whereas, a release through the dissolver off–gas system is not filtered through a credited filtration system.

8.4.5.33.4 SPECIFIC ADMINISTRATIVE CONTROL EVALUATION

This SAC ensures that potential consequences of a H_2 deflagration in the dissolvers are minimized. This SAC and SACs 5.7.2.12.a, 5.7.2.12.b, and 5.7.2.12.e, are effective in preventing or minimizing the consequences of a hydrogen deflagration and release of radioactive material in the H–Canyon dissolvers.

8.4.5.34 Hydrogen Dilution Process Controls - Hydrogen Deflagration in the Dissolver (TSR 5.7.2.12.e)

Limit the off–gases evolved during the dissolution process to a maximum of 72 scfm.

8.4.5.34.1 SAFETY FUNCTION

This AC is designated as an SAC because it serves an SS safety function that cannot be performed by an engineered safety system. The safety function is to ensure that those parameters that can cause significant chemical H_2 generation in the dissolver, primarily from the dissolution of the aluminum cladding on the fuel, are controlled to prevent excessive H_2 generation. This SS safety function minimizes the potential for excessive H_2 generation that could lead to a hydrogen deflagration in the H–Canyon dissolvers (Section 8.3.2.2.3).

8.4.5.34.2 SPECIFIC ADMINISTRATIVE CONTROL DESCRIPTION

Hydrogen is generated in the dissolvers from chemical reactions and by the radiolysis of water. The chemically generated H_2 occurs primarily in the dissolvers from the dissolution of the aluminum cladding on the fuel. During the dissolution process, in addition to H_2 other gases and vapors are generated. The generated gases are called the off–gases. By limiting the parameters that will control the total off–gas generation rate to less than or equal to 72 scfm, the total volume of H_2 in the off–gases will be less than 60% of the LFL as required by NFPA 69. This can be ensured via an approved calculation that establishes maximum limits for the submerged (wetted) surface of the material being dissolved, the nitric acid concentration, and the mercury catalyst concentration that will limit the off–gases evolved during the dissolution process to a maximum of 72 scfm. During normal dissolution operations, the TSR LCO limit that requires a minimum purge flow rate of 40 scfm ensures that the H_2 level does not exceed 60% of the LFL. The purpose of this control is to ensure the offgas generation rate with the associated H_2 generation rate does not exceed the 72 scfm so that the 40 scfm purge is effective in maintaining the H_2 level at less than 60% of the LFL. Additionally, this control ensures that if a process upset occurs during the dissolution and the process is shut down, the H_2 generation rate from chemically generated H_2, which is a function of the boiling solution in the dissolver, does not

exceed 60% of the LFL until the dissolver solution cools down to the point where there in insignificant H_2 generation. This SAC ensures that the parameters that affect the total off–gas generation rate are identified and the correct values (e.g., submerged depth of fuel, HNO_3 concentration, mercury catalyst concentration, etc.) related to these parameters are known so they can be accurately implemented in the procedures. The purpose is to limit the H_2 in the off–gas to ≤60% of the LFL during normal operation such that if a process upset occurs, the LFL will not be exceeded before the dissolving operation can be safely shut down.

8.4.5.34.3 FUNCTIONAL REQUIREMENTS

The requirement is to ensure the parameters that contribute to H_2 and off–gas generation during dissolution are calculated and implemented procedurally prior to the fuel being charged to the dissolvers. By ensuring the parameters are known and maintained, the SAC reduces the potential to exceed the LFL of a hydrogen–air mixture and thereby helps prevent a hydrogen deflagration in the dissolvers.

8.4.5.34.4 SPECIFIC ADMINISTRATIVE CONTROL EVALUATION

This SAC ensures that the parameters that most significantly contribute to the off–gas and H_2 generation rates are known and protected prior to charging fuel to the dissolver. This SAC is implemented by operating procedures in H–Canyon. This SAC and SACs 5.7.2.12.a, 5.7.2.12.b, and 5.7.2.12.d, are effective in preventing or minimizing the consequences of a hydrogen deflagration and release of radioactive material in the H–Canyon dissolvers.

8.4.5.35 Process Controls Required to Prevent an Ammonium Nitrate Build - Explosion (TSR 5.7.2.13.a)

The PVV filters shall be flushed or replaced prior to reaching the maximum limit of 545 kg Ammonium Nitrate.

8.4.5.35.1 SAFETY FUNCTION

This AC is designated as an SAC because it serves as an SC safety function that cannot be performed by an engineered safety system. The SC safety function prevents an AN explosion in the PVV filters. The safety function is to ensure that the maximum limit of 545 kg AN does not accumulate on the PVV filters.

8.4.5.35.2 SPECIFIC ADMINISTRATIVE CONTROL DESCRIPTION

Ammonia is generated in various canyon processes, particularly the waste neutralization processes, in varying amounts. The ammonia is normally released as a vapor which is pulled through the PVV System to the PVV filters. The ammonia accumulates as AN on the PVV filters. Several scenarios have been identified in the safety analysis that could result in an

explosion of the AN on the PVV filters. The resulting explosion would result in a release of radioactive material to the environment and potentially do significant structural damage to the canyon structure. The amount of ammonia generated is a function of the type of material being processed in H–Canyon and the processing rate. The ammonia generation rate and AN accumulation rate on the PVV filters can be calculated within a reasonable limit. Since there is not enough AN generated to require a specific periodic flush of the PVV filters, the amount of AN generated based on the materials processed is calculated at least annually. Based on the cumulative total of the AN calculated to be generated, the PVV filters are flushed before the SAR analyzed limit of 545 kg AN can accumulate on the PVV filters. The calculation is updated as necessary to determine the flushing frequency.

8.4.5.35.3 FUNCTIONAL REQUIREMENTS

The requirement is to ensure that an always safe mass of AN is maintained on the PVV filters, such that an AN explosion is prevented. Below a minimum mass of 545 kg, an AN explosion in the PVV filters is not a credible scenario. Therefore, the functional requirement is to ensure the AN mass remains below the 545 kg limit.

8.4.5.35.4 SPECIFIC ADMINISTRATIVE CONTROL EVALUATION

This SAC is an SC SAC. There are no redundant controls or diverse or independent controls that will materially assist in preventing the event. This SAC, which does not require any special training or qualifications, is implemented by H–Canyon Engineering on an annual basis to determine the AN mass on the PVV filters. Because of the fairly slow accumulation rate of the AN on the PVV filters, the conservative value (much less than the 545 kg limit in the SAR) at which the PVV filters are flushed, and the conservatism used in the calculations, this control is adequate to prevent an AN explosion on the PVV filters. This SAC, SAC 5.7.2.13.b, and the ammonia scrubbers as a DF will ensure that sufficient AN does not accumulate on the PVV filters to present an explosive hazard.

8.4.5.36 Process Controls Required to Prevent an Ammonium Nitrate Buildup - Explosion (TSR 5.7.2.13.b)

An ammonia scrubber shall be in the vent jumper and operated, as required, during waste neutralization for reducing the amount of ammonia being deposited on the Process Vessel Vent (PVV) filter.

8.4.5.36.1 SAFETY FUNCTION

This AC is designated as an SAC because it serves as an SS safety function that cannot be performed by an engineered safety system. The SS safety function helps to prevent an AN explosion in the PVV filters by ensuring the DF ammonia scrubber jumper is available if there is the potential for AN generation during waste neutralization activities. The safety function is to ensure that the maximum limit of 545 kg AN does not accumulate on the PVV filters.

8.4.5.36.2 SPECIFIC ADMINISTRATIVE CONTROL DESCRIPTION

Ammonia is generated in various canyon processes, particularly the waste neutralization processes, in varying amounts. The ammonia is normally released as a vapor which is pulled through the PVV System to the PVV filters. The ammonia accumulates as AN on the PVV filters. Waste neutralization activities are the most significant ammonia generation activities in the H–Canyon processes, primarily due to the decomposition of ferrous sulfamate (FS). Impurities in the waste stream from cold chemicals are also a contributor to ammonia generation and requires use of the scrubber jumper. This SAC ensures the ammonia scrubber jumper is in place when waste neutralization will generate ammonia and the jumper is required to minimize AN accumulation on the PVV filters. This SAC is an effective method of preventing an AN explosion while allowing operational flexibility in H–Canyon. There are two exceptions to the use of a scrubber jumper. If a scrubber jumper is not able to be used, or if continued use of the scrubber will overflow the tank, then the scrubber jumper is not required and no credit for use of the scrubber for that batch of waste will be used for the calculation performed for SAC 5.7.2.13.a.

8.4.5.36.3 FUNCTIONAL REQUIREMENTS

The requirement is to ensure that an always safe mass of AN is maintained on the PVV filters such that an AN explosion is prevented. This functional requirement of this SAC is to ensure the ammonia scrubber is available to minimize AN accumulation on the PVV filters if the material being processed through the waste neutralization processes has the potential to generate AN except as noted in 8.4.5.36.2.

8.4.5.36.4 SPECIFIC ADMINISTRATIVE CONTROL EVALUATION

The ammonia scrubbers are a passive DF that remove some of the AN from the waste neutralization tank offgas streams. By ensuring the ammonia scrubbers are in place and in use when there is a AN generation potential except as noted in 8.4.5.36.2, this SAC helps prevent an AN explosion on the PVV filters. The combination of this SAC, SAC 5.7.2.13.a, and the ammonia scrubbers as a DF will ensure that sufficient AN does not accumulate on the PVV filters to present an explosive hazard.

8.4.5.37 Process Controls Required to Limit Personnel Exposure - Inadvertent Personnel Radiation Exposure (TSR 5.7.2.14.a)

When processing irradiated fuel, the gang valves shall be in the air blow position to allow process air flow to continue for 5 minutes after completing any steam jet solution transfer.

8.4.5.37.1 SAFETY FUNCTION

This AC is designated as an SAC because it serves an SS safety function that cannot be performed by an engineered safety system. The safety function of the air blow of the gang

valves is to introduce air to the steam jet transfer piping to prevent forming a vacuum in the piping as the steam condenses. This SS safety function prevents the facility worker from receiving an inadvertent radiation exposure from radioactive solution sucked back into the pipe if a vacuum is formed in the pipe by the condensing steam. This SS SAC prevents an inadvertent radiation exposure in those cases where the radioactive solution sucked into the gang valve piping remains in the piping (Section 8.3.6.2) or where the radioactive solution is released as a spilled liquid (leaks) in the GVC (Section 8.3.6.3).

8.4.5.37.2 SPECIFIC ADMINISTRATIVE CONTROL DESCRIPTION

Most of the solutions in H–Canyon are transferred by steam jet. The steam jets are controlled by the gang valves in the GVCs. After a steam jet transfer, the gang valves are manipulated such that they may be closed. If the valves are closed immediately after the transfer, steam may be trapped in the transfer lines from the tanks to the GVC. As the steam condenses, it will create a vacuum in the piping that can allow radioactive solution to be sucked into the GVC piping located in the GVCs. If personnel were not aware of the radioactive solution in the gang valves, they could inadvertently be exposed to a strong radiation field around the gang valve containing the solution. Two scenarios are possible. The first is when the radioactive solution remains in the gang valve and the other is from a leak of the radioactive solution to the GVC floor. Either scenario exposes the worker to a potentially high radiation source. The gang valves have an air blow position on the valve cam. Putting the gang valve in this position and providing an air flow into the gang valve piping for 5 minutes purges the steam and allows the pipes to cool down without creating the vacuum necessary for the suckback scenario to occur. The 5 minutes is based on operating experience as being an adequate time to ensure the steam has fully condensed and to prevent the possibility of a suckback. In those events where the radioactive solution remains in the gang valve piping, the only hazard is from gamma emitting radioisotopes since the piping and gang valve structure will not stop gamma radiation. There is no significant danger from alpha or beta emitting radioisotopes if the solution remains inside the gang valves. Therefore, this scenario applies only to the HGVC when irradiated fuel is being processed. If the solution is pulled into the gang valve and is released (e.g., leaks) to the GVC floor, the hazard to the worker is primarily from alpha emitting radioisotopes. There0fore, this scenario applies to both the HGVC and WGVC during processing of irradiated fuel.

8.4.5.37.3 FUNCTIONAL REQUIREMENTS

The requirement involves verification that after each steam jet transfer the manual gang valves are put into an air blow position with air introduced to the system for at least five (5) minutes. Since an automatic timer is available to control the air blow time, the requirement is to ensure that the air blow lasts for at least 5 minutes. These controls are implemented through H-Canyon procedures that provide instructions to ensure the appropriate gang valve is placed in the air blow position and that air is introduced to the system for at least 5 minutes.

8.4.5.37.4 SPECIFIC ADMINISTRATIVE CONTROL EVALUATION

This SAC ensures that an air blow of at least 5 minute duration is initiated after each steam jet transfer. The 5-minute air blow allows the transfer piping to cool down and any steam in the piping to condense without creating a vacuum that will lead to a suckback of radioactive solution to the GVCs. By preventing the suckback, the potential inadvertent personnel exposure to ionizing radiation is prevented. This SAC along with SACs 5.7.2.14.i and 5.7.2.14.j, and the sampling procedures and equipment (e.g., doorstops) are effective with preventing or minimizing the consequences of an inadvertent personnel exposure to ionizing radiation.

8.4.5.38 Process Controls Required to Limit Personnel Exposure - Sample Aisle Internal Exposure (TSR 5.7.2.14.b)

A shroud shall be present that extends below the tip of the sample needle or a doorstop shall be used when taking the sample.

8.4.5.38.1 SAFETY FUNCTION

This AC is designated as an SAC because it serves an SS safety function that cannot be performed by an engineered safety system. The shroud and doorstop are engineered features; however, they can be removed, broken, or otherwise made ineffective in preventing the event. This SAC ensures that an operational shroud is available immediately before the operator takes the sample or that an operational doorstop is used in the sampling process. This SS safety function prevents the facility worker from receiving a significant internal radiological material dose from a puncture wound.

8.4.5.38.2 SPECIFIC ADMINISTRATIVE CONTROL DESCRIPTION

The scenario that would expose a facility worker to high levels of radiation or contamination is a puncture wound from a sample needle. The event is most likely to occur when the needle shroud is missing or broken, when damaged needles are being replaced, or when damaged or broken sample vials are being removed from the sampler. The sharp needle pierces the operator's protective clothing and skin. Radioactive contamination remaining on the needle is injected into the operator's hands or arm where the needle penetrated the body. Controls are required to ensure the operator does not receive a puncture wound during the sampling process to prevent injecting radioactive solutions into the operator. This SAC works in conjunction with SACs 5.7.2.14.c and 5.7.2.14.d to prevent a potential puncture wound when working in the samplers. This SAC verifies each time a sample is taken that the shroud is present and extends below the tip of the sample needle or that a doorstop is used exclusively in taking the sample.

8.4.5.38.3 FUNCTIONAL REQUIREMENTS

The requirement involves verification each time a sample is taken that the shroud is present and extends below the tip of the sample needle or that a doorstop is used exclusively in taking the

sample. This control prevents the facility worker taking a sample from potentially receiving consequences from a puncture wound. These controls are implemented through H-Canyon sampling procedures that provide instructions on how to obtain a sample.

8.4.5.38.4 SPECIFIC ADMINISTRATIVE CONTROL EVALUATION

This SAC ensures that equipment that can fail or be changed out during maintenance activities is in place prior to the operator actually taking the sample. WSRC has completed an evaluation of this scenario to determine if additional cost effective controls could reduce the severity of this event. This evaluation, documented in NMP-ENG-94-0182 (Ref. 65), concluded that existing measures are effective in minimizing the risk to personnel from sample needle punctures. No cost effective means, to include SSCs, were identified for any further reduction of risk.

8.4.5.39 Process Controls Required to Limit Personnel Exposure - Sample Aisle Internal Exposure (TSR 5.7.2.14.c)

Leather gloves and protective equipment shall be used when working near an unprotected needle.

8.4.5.39.1 SAFETY FUNCTION

This AC is designated as an SAC because it serves an SS safety function that cannot be performed by an existing engineered safety system. The SAC requires the use of PPE to ensure that the operator does not receive a puncture wound when working near an unprotected sampling needle. This SS safety function prevents the facility worker from receiving a significant internal radiological material dose from a puncture wound.

8.4.5.39.2 SPECIFIC ADMINISTRATIVE CONTROL DESCRIPTION

The scenario that would expose a facility worker to high levels of radiation or contamination is a puncture wound from a sample needle. The event is most likely to occur when the needle shroud is missing or broken, when damaged needles are being replaced, or when damaged or broken sample vials are being removed from the sampler. The sharp needle pierces the operator's protective clothing and skin. Radioactive contamination remaining on the needle is injected into the operator's hands or arm where the needle penetrated the body. This SAC ensures that PPE is used to minimize the potential for a puncture wound from a contaminated needle during operations involving the canyon samplers. This SAC works in conjunction with SACs 5.7.2.14.b and 5.7.2.14.d to prevent a potential puncture wound when working in the samplers. This SAC ensures protective clothing (leather gloves) and equipment is used when working near an unprotected (e.g., missing or broken shroud) needle.

8.4.5.39.3 FUNCTIONAL REQUIREMENTS

H-Canyon procedures require the use of personal protective clothing (leather gloves) and equipment (special needle replacement wrench). The leather gloves and needle replacement wrench minimize the potential for the facility worker to receive consequences from a puncture wound. These controls are implemented through H-Canyon procedures.

8.4.5.39.4 SPECIFIC ADMINISTRATIVE CONTROL EVALUATION

WSRC has completed an evaluation of this scenario to determine if additional cost effective controls could reduce the severity of this event. This evaluation is documented in NMP-ENG-94-0182 (Ref. 65) and concluded that existing measures effectively minimize the risk to personnel from sample needle punctures. No cost effective means were identified for any further reduction of risk.

8.4.5.40 Process Controls Required to Limit Personnel Exposure - Sample Aisle Internal Exposure (TSR 5.7.2.14.d)

H–Canyon sampling procedures shall provide instructions on how to obtain a sample.

8.4.5.40.1 SAFETY FUNCTION

This AC is designated as an SAC because it serves an SS safety function that cannot be performed by an engineered safety system. This SS safety function prevents the facility worker from receiving a significant internal radiological material dose from a puncture wound.

8.4.5.40.2 SPECIFIC ADMINISTRATIVE CONTROL DESCRIPTION

The scenario that would expose a facility worker to high levels of radiation or contamination is a puncture wound from a sample needle. The event is most likely to occur when the needle shroud is missing or broken, when damaged needles are being replaced, or when damaged or broken sample vials are being removed from the sampler. The sharp needle pierces the operator's protective clothing and skin. Radioactive contamination remaining on the needle is injected into the operator's hands or arm where the needle penetrated the body. This SAC works in conjunction with SACs 5.7.2.14.b and 5.7.2.14.c to prevent a potential puncture wound when working in the samplers. This SAC simply requires the reinforcement in the procedures of the activities required by the other two SACs and also includes other good practices to take the samples.

8.4.5.40.3 FUNCTIONAL REQUIREMENTS

Procedures shall be used to implement the SACs and include instructions on how to obtain a sample.

8.4.5.40.4 SPECIFIC ADMINISTRATIVE CONTROL EVALUATION

The procedures implement the program to ensure the needle shroud is in place and other good practices to protect the worker from a puncture wound are implemented in the sampling procedures. WSRC has completed an evaluation of this scenario to determine if additional cost effective controls could reduce the severity of this event. This evaluation, documented in NMP-ENG-94-0182 (Ref. 65), concluded that existing measures are effective in minimizing the risk to personnel from sample needle punctures. No cost effective means were identified for any further reduction of risk.

8.4.5.41 Process Controls Required to Limit Personnel Exposure - Inadvertent Personnel Radiation Exposure in the Hot Canyon from Fuel Handling Operations in the Railroad Tunnel (TSR 5.7.2.14.e)

The Permission Switches shall prevent the Railroad Tunnel and Hot Crane Maintenance Area Shielding Doors from opening when irradiated fuel transfer operations are being conducted in the Railroad Tunnel. The switches shall be tested for proper operation every 18 months.

8.4.5.41.1 SAFETY FUNCTION

This AC is designated as an SAC because it describes the functional requirements of the SS safety function performed by an engineered safety system. Although the Permission Switches prevent the doors from opening, this SAC ensures the Permission Switches are in place and the function of the switch is not changed from that credited in the safety analysis. The SAC is an acceptable control since it is for facility worker protection and the Permission Switches are only required when irradiated fuel is being handled in the Railroad Tunnel. The safety function is to prevent inadvertent personnel entry into the Railroad Tunnel when irradiated fuel is being handled and moved in the Railroad Tunnel. This SS safety function prevents the facility worker from receiving an inadvertent radiation exposure from the gamma radiation emitted by the fission products from irradiated fuel handling operations in the Railroad Tunnel (Section 8.3.2.6.4).

8.4.5.41.2 SPECIFIC ADMINISTRATIVE CONTROL DESCRIPTION

Both irradiated and unirradiated fuels are handled in the Railroad Tunnel. The irradiated fuel contains significant fission products, many of which emit high energy gamma radiation. The unirradiated fuel does not have fission products associated with it and there is little gamma radiation from the unirradiated fuel. The potential hazard to the facility worker is from the high energy gamma radiation emitted by the irradiated fuel when the fuel is outside of the shipping container (e.g., shipping cask). Inside the shipping container, the fuel is sufficiently shielded such that there is little exposure potential to the facility worker. Therefore, this scenario applies only to the Railroad Tunnel when irradiated fuel is being handled or moved outside the shipping containers.

8.4.5.41.3 FUNCTIONAL REQUIREMENTS

The requirement is to ensure that the Railroad Tunnel and Hot Crane Maintenance Shielding Doors are not inadvertently opened to allow personnel to enter the Railroad Tunnel when irradiated fuel is outside the shipping container inside the Railroad Tunnel. With the permission switches in the lockout position, the shielding doors cannot be inadvertently opened. The functional requirement is to provide a positive mechanism to prevent inadvertent opening of the shielding doors. The switches shall be tested for proper operation every 18 months. The test cycle is based on engineering judgment. The tests shall ensure that when the switches are in the "locked" positions, pushing the switch shall not allow the shielding door to open.

8.4.5.41.4 SPECIFIC ADMINISTRATIVE CONTROL EVALUATION

This SAC ensures that a positive mechanism exists to prevent inadvertently opening the Railroad Tunnel and Hot Crane Maintenance Shielding Doors when irradiated fuel bundle transfer operations are being conducted in the Railroad Tunnel (e.g., bundles are outside the shipping containers). By preventing personnel from inadvertently entering the Railroad Tunnel, a potential inadvertent personnel exposure to ionizing radiation is prevented. This SAC along with SACs 5.7.2.14.f, 5.7.2.14.g, and 5.7.2.14.h, are effective in preventing or minimizing the consequences of an inadvertent personnel exposure to ionizing radiation.

8.4.5.42 Process Controls Required to Limit Personnel Exposure - Inadvertent Personnel Radiation Exposure in the Hot Canyon from Fuel Handling Operations in the Railroad Tunnel (TSR 5.7.2.14.f)

When irradiated fuel bundles are being handled by the crane, the SOM shall maintain positive control of the key for the Railroad Tunnel and Hot Crane Maintenance Area Shielding Door Permission Switches.

8.4.5.42.1 SAFETY FUNCTION

This AC is designated as an SAC because it serves an SS safety function to ensure positive control over the keys during fuel handling operations. The safety function is to prevent inadvertent personnel entry into the Railroad Tunnel when irradiated fuel bundles are being handled by the crane and moved in the Railroad Tunnel. This SS safety function prevents the facility worker from receiving an inadvertent radiation exposure from the gamma radiation emitted by the fission products from irradiated fuel handling operations performed in the Railroad Tunnel (Section 8.3.2.6.4).

8.4.5.42.2 SPECIFIC ADMINISTRATIVE CONTROL DESCRIPTION

The Permission Switches must be pushed and held to operate the Railroad Tunnel and Hot Crane Maintenance Shielding Doors. To ensure the switches are activated only at certain times, the operation of the Permission Switches can be controlled in the H–Canyon Control Room by

locking the switches into the off or inoperable position. Since the Permission Switches are only required to be inactive when irradiated fuel is being handled by the crane, a positive control of the keys is required to ensure the Permission Switches are locked in the inoperable position. By ensuring the switches are locked out, the ability to inadvertently open the shielding doors when irradiated fuel is present is minimized. Both irradiated and unirradiated fuels are handled in the Railroad Tunnel. The irradiated fuel contains significant fission products, many of which emit high energy gamma radiation. The unirradiated fuel does not have fission products associated with it and there is little gamma radiation from the unirradiated fuel. The potential hazard to the facility worker is from the high energy gamma radiation emitted by the irradiated fuel when the fuel is outside of the shipping container (e.g., shipping cask). Inside the shipping container, the fuel is sufficiently shielded such that there is little exposure potential to the facility worker. Therefore, this scenario applies only to the Railroad Tunnel when irradiated fuel is being handled or moved by the crane outside the shipping containers.

8.4.5.42.3 FUNCTIONAL REQUIREMENTS

The requirement is to ensure that the Railroad Tunnel and Hot Crane Maintenance Shielding Doors are not inadvertently opened to allow personnel to enter the Railroad Tunnel when irradiated fuel is outside the shipping container inside the Railroad Tunnel. With the permission switches in the lockout position and the keys that will unlock the permission switches under the positive control of the SOM, the shielding doors cannot be inadvertently opened. The functional requirement is to provide a positive mechanism to control the keys to prevent inadvertent opening of the shielding doors.

8.4.5.42.4 SPECIFIC ADMINISTRATIVE CONTROL EVALUATION

This SAC ensures that a positive mechanism exists to prevent inadvertently opening the Railroad Tunnel and Hot Crane Maintenance Shielding Doors when irradiated fuel bundles are being handled by the crane outside the shipping containers. By preventing personnel from inadvertently entering the Railroad Tunnel, a potential inadvertent personnel exposure to ionizing radiation is prevented. By ensuring the switches are locked out, the ability to inadvertently open the shielding doors when irradiated fuel is present is minimized. This SAC is implemented by H–Canyon operating procedures. This SAC along with SACs 5.7.2.14.e, 5.7.2.14.g, and 5.7.2.14.h, are effective in preventing or minimizing the consequences of an inadvertent personnel exposure to ionizing radiation.

8.4.5.43 Process Controls Required to Limit Personnel Exposure - Inadvertent Personnel Radiation Exposure in the Hot Canyon from Fuel Handling Operations in the Railroad Tunnel (TSR 5.7.2.14.g)

When irradiated fuel bundles are being handled by the crane, personnel access to the Railroad Tunnel Airlock, Hot Crane Maintenance Area, Hot Canyon Shop, and Swimming Pool Decontamination Facility shall be restricted to personnel required for fuel handling operations.

8.4.5.43.1 SAFETY FUNCTION

This AC is designated as an SAC because it serves an SS safety function that cannot be performed by an engineered safety system. The safety function is to prevent inadvertent personnel entry into the Railroad Tunnel Airlock, Hot Crane Maintenance Area, Hot Canyon Shop, and Swimming Pool Decontamination Facility when irradiated fuel is being handled and moved by the crane from the Railroad Tunnel to the dissolvers in Section 6 of the canyon. This SS safety function prevents the facility worker from receiving an inadvertent radiation exposure from the gamma radiation emitted by the fission products from the irradiated fuel being handled (Section 8.3.2.6.4).

8.4.5.43.2 SPECIFIC ADMINISTRATIVE CONTROL DESCRIPTION

Personnel (e.g., operators) may be in the identified areas doing various tasks when fuel is being moved from the Railroad Tunnel to the dissolvers in Section 6. The fuel will pass directly over some of the identified areas. If shielding is not present (e.g., Hot Crane Maintenance Shielding Doors), personnel in the areas could be exposed to the high energy gamma radiation. Although the personnel will be some distance from the irradiated fuel, the high energy gamma radiation could still result in a significant radiological exposure to personnel in these areas. Both irradiated and unirradiated fuels are moved from the Railroad Tunnel to the dissolvers. The irradiated fuel contains significant fission products, many of which emit high energy gamma radiation. The unirradiated fuel does not have fission products associated with it and there is little gamma radiation from the unirradiated fuel. The potential hazard to the facility worker is from the high energy gamma radiation emitted by the irradiated fuel when the fuel is outside of the shipping container (e.g., shipping cask) or other appropriate shielding. By ensuring personnel access in the identified areas is controlled, personnel not required for fuel handling operations will be far enough away from and shielded by the concrete walls of the canyon structure to prevent a significant exposure to the ionizing radiation. Therefore, this scenario applies only to the noted areas when irradiated fuel is being handled or moved from the shipping containers to the dissolvers.

8.4.5.43.3 FUNCTIONAL REQUIREMENTS

The requirement is to ensure that personnel access to the identified areas is controlled when irradiated fuel is being moved by the crane from the shipping container inside the Railroad Tunnel to the dissolvers in Section 6. The functional requirement is to provide, via procedures, a positive mechanism (e.g., access control, personnel accountability) to control personnel access to these areas when irradiated fuel is present.

8.4.5.43.4 SPECIFIC ADMINISTRATIVE CONTROL EVALUATION

This SAC ensures that a positive mechanism exists to prevent inadvertent exposure to personnel by limiting access to the identified areas when irradiated fuel is being moved by the crane from the Railroad Tunnel to the Section 6 dissolvers. By preventing personnel from being in these areas, a potential inadvertent personnel exposure to ionizing radiation is prevented or minimized.

This SAC is implemented by H–Canyon operating procedures. This SAC along with SACs 5.7.2.14.e, 5.7.2.14.f, and 5.7.2.14.h, are effective in preventing or minimizing the consequences of an inadvertent personnel exposure to ionizing radiation.

8.4.5.44 Process Controls Required to Limit Personnel Exposure - Inadvertent Personnel Radiation Exposure in the Hot Canyon from Fuel Handling Operations in the Railroad Tunnel (TSR 5.7.2.14.h)

When irradiated fuel bundles are being handled by the crane, personnel required to be in the Railroad Tunnel Airlock and the Hot Crane Maintenance Area shall either wear audible dosimetry or be accompanied by RCO personnel.

8.4.5.44.1 SAFETY FUNCTION

This AC is designated as an SAC because it serves an SS safety function that cannot be performed by an engineered safety system. The safety function is to mitigate inadvertent personnel exposure from ionizing radiation when irradiated fuel is being handled by the crane and moved from the Railroad Tunnel to the dissolvers in Section 6 of the canyon. This SS safety function minimizes the potential exposure the facility worker could receive from an inadvertent radiation exposure from the gamma radiation emitted by the fission products from the irradiated fuel being handling (Section 8.3.2.6.4).

8.4.5.44.2 SPECIFIC ADMINISTRATIVE CONTROL DESCRIPTION

Personnel (e.g., operators) may be in the Railroad Tunnel and Hot Crane Maintenance Area doing various tasks when fuel is being moved from the Railroad Tunnel to the dissolvers in Section 6. Moving the irradiated fuel may lead to an exposure to ionizing radiation of the personnel who may be in the areas. The audible dosimetry or RadCon monitoring in the immediate vicinity of the workers will alert the workers to a potentially high radiation area so that they can immediately evacuate the area, thereby limiting the time they are exposed to the ionizing radiation. The RadCon Program is the programmatic control that requires the dosimetry or RadCon technician monitoring with this specific aspect of the program credited with minimizing the potential exposure time to the ionizing radiation. Both irradiated and unirradiated fuels are moved from the Railroad Tunnel to the dissolvers. The irradiated fuel contains significant fission products, many of which emit high energy gamma radiation. The unirradiated fuel does not have fission products associated with it and there is little gamma radiation from the unirradiated fuel. The potential hazard to the facility worker is from the high energy gamma radiation emitted by the irradiated fuel when the fuel is outside of the shipping container (e.g., shipping cask) or other appropriate shielding. By ensuring the essential personnel in the Railroad Tunnel Airlock or the Hot Crane Maintenance Area are either wearing audible dosimetry or are accompanied by RCO personnel, these personnel will be notified when there is potential for a significant exposure to ionizing radiation. Therefore, this scenario applies only to the noted areas when irradiated fuel is being handled by the crane or moved from the shipping containers to the dissolvers or another storage location.

8.4.5.44.3 FUNCTIONAL REQUIREMENTS

The requirement is to ensure that personnel who may be in the identified areas when irradiated fuel is being moved by the crane from the shipping container inside the Railroad Tunnel to the dissolvers in Section 6 either wear alarming dosimetry or be accompanied by RadCon personnel who will be monitoring for increased levels of ionizing radiation in the immediate vicinity of the personnel. By detecting and alerting personnel to increased levels of ionizing radiation (primarily gamma radiation), the SAC minimizes the potential personnel exposure. The functional requirement is to provide, via procedures, a positive mechanism to ensure that the potential for an inadvertent personnel exposure to ionizing gamma radiation when irradiated fuel is present.

8.4.5.44.4 SPECIFIC ADMINISTRATIVE CONTROL EVALUATION

This SAC ensures that a positive mechanism exists to minimize and mitigate inadvertent radiation exposure to personnel in the Railroad Tunnel Airlock or the Hot Crane Maintenance Area by ensuring detection of increased levels of ionizing radiation and alerting personnel. By detecting the increased radiation levels and alerting personnel to evacuate these areas, a potential inadvertent personnel exposure to ionizing radiation is minimized. This SAC is implemented by H–Canyon operating procedures. This SAC along with SACs 5.7.2.14.e, 5.7.2.14.f, and 5.7.2.14.g, are effective in preventing or minimizing the consequences of an inadvertent personnel exposure to ionizing radiation.

8.4.5.45 Process Controls Required to Limit Personnel Exposure - Inadvertent Personnel Radiation Exposure (TSR 5.7.2.14.i)

When processing irradiated fuel with the potential for severe exposure in the event of a significant radiological material release (i.e., dissolved raw material, Head End, First Cycle feed and waste, and HAW evaporation and neutralization solutions), personnel entering the HGVC or taking samples in the Hot Sample Aisle shall be required to either wear audible dosimetry or be accompanied by RCO personnel.

8.4.5.45.1 SAFETY FUNCTION

This AC is designated as an SAC because it serves an SS safety function that cannot be performed by an engineered safety system. The safety function of the SAC is to mitigate the consequences of personnel inadvertently being exposed to ionizing radiation in either the HGVC or the Hot Sample Aisle. This SS SAC mitigates an inadvertent radiation exposure in those cases where the radioactive solution sucked into the gang valve piping remains in the piping (Section 8.3.6.2) or where radioactive solution is released as a spilled liquid (leaks) in the HGVC (Section 8.3.6.3) or to prevent exposure to ionizing radiation in the Hot Sample Aisle during sampling activities (Sections 8.3.6.2 and 8.3.6.3).

8.4.5.45.2 SPECIFIC ADMINISTRATIVE CONTROL DESCRIPTION

If irradiated material is being processed and a suckback event occurs or a sampling evolution is occurring and the solution remains in the piping or is released to the floor, there is a significant potential for a facility worker to be exposed to gamma radiation from the fission products included in the radioactive solution. Since the gamma radiation will be present when irradiated fuel is processed, a method must be available to warn the operator if there is a potential exposure hazard. The Radiation Protection Program is credited as a programmatic control and other aspects of the RadCon Program, e.g., constant air monitors, radiation surveys, etc. are a part of this program. However, these are more general activities that may not provide the worker actually involved in the specific operations the level of protection required. For example, the CAMs may not be present in the immediate work area or are monitoring different areas to alert the operator to airborne radiation. For the "hands on" activities such as GV manipulation, the only practical detection and warning of radiation in the immediate vicinity of the facility worker is personal dosimetry or a RadCon technician who is monitoring the work activities. The Radiation Protection Program, which requires a Rad Con Operator to be present or the appropriate audible dosimetry be worn by the operators to detect ionizing radiation, is the programmatic control that prevents and mitigates a potential exposure. This SAC identifies those specific attributes of the RadCon Program credited with minimizing personnel exposure to potentially high gamma radiation fields during the processing of irradiated fuel containing fission products.

8.4.5.45.3 FUNCTIONAL REQUIREMENTS

The requirement is to ensure that RCO personnel monitor for ionizing radiation or facility personnel entering the HGVC or entering the Sample Aisle during sampling evolutions wear alarming dosimetry so that personnel can immediately evacuate the area if the radiation levels are above a predetermined setpoint established by the RadCon Program. The functional requirement is to provide a warning system to alert personnel to immediately evacuate from a potentially high radiation hazard area. These controls are implemented through H-Canyon procedures that provide instructions to ensure the operators wear the appropriate dosimetry or that a RCO technician is present during these operations.

8.4.5.45.4 SPECIFIC ADMINISTRATIVE CONTROL EVALUATION

This SAC ensures that personnel will be notified and evacuate a high radiation area to minimize the potential exposure of personnel in the HGVC or Sample Aisle to gamma radiation. Other controls that help prevent suckbacks (SAC 5.7.2.14.a) prevent the presence of the ionizing radiation in the HGVC. SAC 5.7.2.14.j, which limits personnel access to this area, the other controls noted, and this SAC, which requires monitoring for the presence of the radiation, are effective controls to prevent or minimize the consequences of an inadvertent exposure to the ionizing radiation.

8.4.5.46 Process Controls Required to Limit Personnel Exposure - Inadvertent Personnel Radiation Exposure (TSR 5.7.2.14.j)

When processing irradiated fuel, unaccompanied access to the HGVC, WGVC, or Sample Aisles shall be limited to properly trained and qualified personnel.

8.4.5.46.1 SAFETY FUNCTION

This AC is designated as an SAC because it serves an SS safety function that cannot be performed by an engineered safety system. The safety function of the SAC is to prevent an inadvertent exposure to ionizing radiation in either the HGVC, WGVC, or Sample Aisles. This SS SAC prevents an inadvertent radiation exposure in those cases where the radioactive solution sucked into the gang valve piping remains in the piping or where the radioactive solution is released as a spilled liquid (leaks) in the GVC (Hot or Warm) or to prevent exposure to ionizing radiation in the Sample Aisles during sampling activities by limiting the number of personnel that can be in these areas during processing operations involving irradiated fuel (Sections 8.3.2.6.2 and 8.3.2.6.3).

8.4.5.46.2 SPECIFIC ADMINISTRATIVE CONTROL DESCRIPTION

If irradiated material is being processed and a suckback event occurs, there is a significant potential for a facility worker to be exposed to gamma radiation from the fission products included in the radioactive solution that remains in the piping or is released to the floor. There is also the potential to expose a facility worker to high levels of gamma radiation during sampling procedures involving irradiated fuel solutions. Doorstops and sampling techniques will reduce the potential exposure in the Sample Aisles. Since the gamma radiation will be present when irradiated fuel is processed, a method must be available to prevent or mitigate the potential exposure hazard. This SAC requires that only properly trained and qualified personnel enter those areas with the greatest potential for exposure to high gamma radiation fields during the processing of irradiated fuel containing fission products.

8.4.5.46.3 FUNCTIONAL REQUIREMENTS

The requirement is to limit unaccompanied access to the HGVC, WGVC, or Sample Aisles to only those personnel properly trained and qualified to perform the required operations or to be present in those areas. This control is implemented through H–Canyon procedures for the processing of irradiated fuel.

8.4.5.46.4 SPECIFIC ADMINISTRATIVE CONTROL EVALUATION

This SAC ensures that only trained and qualified personnel will be present in the Sample Aisles or the GVC (Hot or Warm) if there is potential for exposure to a high gamma radiation field. By limiting access to the HGVC, WGVC, or Sample Aisles during processing operations involving irradiated fuel, an inadvertent personnel exposure to ionizing radiation is prevented. Also

limiting the personnel access to only trained and qualified personnel helps ensure the personnel will take the appropriate actions to minimize exposure. Other controls that help prevent suckbacks (SAC 5.7.2.14.a) prevent the presence of the ionizing radiation in the HGVC or WGVC. The use of doorstops and other sampling techniques and controls on the sampling process prevent or limit the potential for operator exposure during the sampling process. SAC 5.7.2.14.i, which requires monitoring for ionizing radiation during operations in these areas and the other controls noted, along with this SAC minimize the potential for an inadvertent exposure to ionizing radiation during processing of irradiated fuel.

8.4.5.47 Process Controls Required to Protect Source Term Assumption (TSR 5.7.2.15.c)

When processing or storing Pu-238, limit the amount of Pu–238 in any single FWR process tank to less than or equal to 5.0 kilograms.

8.4.5.47.1 SAFETY FUNCTION

This AC is designated as an SAC because it serves a SC safety function that cannot be performed by an engineered safety system. The SC safety function ensures that the source term assumptions used in the FWR accident analysis are protected. It also ensures that the source term assumptions for an inadvertent transfer of the radioactive solution to Outside Facilities, an uncontrolled reaction (hydrogen deflagration) in the process vessels, or an SCW or CCW coil leak are protected. The SAC mitigates the airborne release consequences associated with the above accidents by limiting the source term in any one FWR process vessel to 5.0 kg of Pu-238. The SAC protects the source term assumption and limits the consequences to both the offsite public and the onsite worker.

8.4.5.47.2 SPECIFIC ADMINISTRATIVE CONTROL DESCRIPTION

Inadvertent transfers of the radioactive solution to Outside Facilities, uncontrolled reactions (hydrogen deflagration) in the process vessels, or SCW or CCW coil leaks will result in a release of the radioactive nuclides present. These events could occur during H–Canyon operations. Therefore, to limit the potential consequence of these events, the source term in a single FWR process tank must be limited since it is assumed that a release from an FWR process tank is included in the source term for these events. On a mass basis, Pu-238 provides the highest radiological consequences of any radionuclide in H–Canyon or OF–H operations. There is no equipment or instrument that will limit the amount of Pu-238 in an FWR tank and procedural controls are required to limit the mass of material in the FWR tanks. The SAC will help limit the Pu-238 mass in the FWR tank(s) and therefore protect the accident analysis assumptions.

8.4.5.47.3 FUNCTIONAL REQUIREMENTS

The requirement is to limit the Pu-238 mass in any given FWR tank to less than or equal to 5.0 kg Pu-238 to protect the source term assumptions in the accident analysis. By limiting the Pu-238 mass in the tank, the potential consequences from inadvertent transfers of the radioactive

solution to Outside Facilities, uncontrolled reactions (hydrogen deflagration) in the process vessels, or SCW or CCW coil leaks are minimized.

8.4.5.47.4 SPECIFIC ADMINISTRATIVE CONTROL EVALUATION

There are no other DFs or automatic controls that will limit the amount of Pu-238 in the FWR tanks. This control is implemented before operations begin by Engineering evaluating the material to be processed and procedurally limiting the mass of material that can be present in any single FWR tank. There are no other controls, other than normal processing procedures that will provide redundancy or diversity to support this SAC. This is the only effective control available to protect the accident analysis source term assumptions.

8.4.5.48 Process Controls Required to Prevent an Organic or Solvent Fire (TSR 5.7.2.16.a)

Limit operating temperatures to at least 5°C below the minimum 90°C flash point (i.e., 85°C) required by the diluent (n–paraffin) purchase specifications.

8.4.5.48.1 SAFETY FUNCTION

This AC is designated as an SAC because it serves as a SS safety function that cannot be performed by an engineered safety system. The SS safety function prevents an organic vapor (n–paraffin) deflagration in the EUS Tank or an A-Line Tank vapor space. The SS safety function also prevents a fire involving solvent in either H-Canyon or OF-H. The safety function is based on closed cup flash point of n–paraffin since it has a much lower flash point than TBP.

8.4.5.48.2 SPECIFIC ADMINISTRATIVE CONTROL DESCRIPTION

The explosive limit for an n-paraffin-air mixture ranges from 0.7 vol% (LEL) to 7.0 vol% (UEL) of n–paraffin vapors. For H–Canyon process solvent (TBP/n–paraffin), the LEL can only be reached if the solvent is heated above the flashpoint of the n–paraffin diluent (greater than 90°C). Either the organic fire or explosion results in a release of radioactive material to the environment. This SAC ensures that the solvent temperature does not exceed the minimum flashpoint of 90°C, minimizing the potential to have a flammable organic vapor/air mixture. Ensuring the flammability limit is not exceeded helps prevent a fire or organic vapor explosion if an ignition source is available.

8.4.5.48.3 FUNCTIONAL REQUIREMENTS

The requirement is to ensure that the n–paraffin does not volatilize and form enough vapors to exceed the LFL of the n–paraffin vapor-air mixture. The functional requirement of this control is to ensure the solvent temperature does not exceed the minimum 90°C flash point so that an organic fire cannot occur.

8.4.5.48.4 SPECIFIC ADMINISTRATIVE CONTROL EVALUATION

The combination of this SAC and SAC 5.7.2.16.b will ensure that the n-paraffin will never reach the 90°C flash point in H–Canyon and OF–H process vessels and prevent an solvent fire or organic vapor deflagration.

8.4.5.49 Process Controls Required to Prevent an Organic or Solvent Fire (TSR 5.7.2.16.b)

Ensure that only n–paraffin that meets the minimum 90°C flash point is used in the H–Canyon and OF–H processes.

8.4.5.49.1 SAFETY FUNCTION

This AC is designated as an SAC because it serves as a SS safety function that cannot be performed by an engineered safety system. The SS safety function minimizes the potential for an organic vapor (n-paraffin) deflagration in the EUS Tank or an A-Line Tank vapor space. The SS safety function also minimizes the potential for a fire involving solvent in either H–Canyon or OF–H. The safety function is based on closed cup flash point of n–paraffin since it has a much lower flash point than TBP.

8.4.5.49.2 SPECIFIC ADMINISTRATIVE CONTROL DESCRIPTION

The accident analysis postulates the release of a large quantity of the organic solvent from the H–Canyon or OF–H process vessels. It is assumed that an ignition source is present that could ignite the organic material if the vapors from the organic liquid exceed the flammability limit of the organic vapor/air mixture. The ensuing organic liquid fire results in a radioactive material release.

One method to prevent exceeding a flammable organic vapor concentration is to ensure the organic liquids used in the process have a high flashpoint so that the potential for generating a large amount of organic vapors is minimized. The flammability limit for an n–paraffin–air mixture ranges from 0.7 vol% (LEL) to 7.0 vol% (UEL) of n–paraffin vapors. For H–Canyon process solvent (TBP/n–paraffin), the LFL can only be reached if the solvent is heated above the minimum flashpoint of the diluent (greater than 90°C). This SAC is enforced before the n–paraffin diluent is introduced into the OF–H storage tanks by verification that the n–paraffin meets the minimum purchase specification requirements of at least a 90ºC closed cup flash point test. By ensuring that only n–paraffin that meets the minimum flash point requirements is used in H–Canyon and OF–H, the potential for an organic fire or organic vapor explosion is minimized.

8.4.5.49.3 FUNCTIONAL REQUIREMENTS

The requirement is to ensure that the n–paraffin purchased for use in H-Canyon has a minimum 90ºC flash point.

8.4.5.49.4 SPECIFIC ADMINISTRATIVE CONTROL EVALUATION

The combination of this SAC and SAC 5.7.2.16.a will minimize the potential for a solvent fire or organic vapor deflagration in H-Canyon or OF-H vessels.

8.4.5.50 Ammonia Concentration Verification (TSR 5.7.2.12.i)

The ammonia concentration in H-Canyon Tanks 5.2, 8.4, 9.8, or 16.1 shall be less than or equal to 1500 mg/L in neutralized waste.

8.4.5.50.1 SAFETY FUNCTION

This AC is designated as an SAC because it serves an SS safety function that cannot be performed by an engineered safety system. The safety function of the SAC is to protect the analysis assumption used to determine the time to reach 25% of the CLFL in the event the PVV system fails for H-Canyon waste neutralization tanks during neutralization. To protect the ammonia concentration assumed in the accident analysis, a control must be in place to limit the ammonia concentration to less than or equal to 1500 mg/L in neutralized waste (greater than or equal to pH 7).

8.4.5.50.2 SPECIFIC ADMINISTRATIVE CONTROL DESCRIPTION

Tank 9.8 is routinely used for neutralization in Low Activity Waste (LAW) and Tank 8.4 is routinely used in High Activity Waste (HAW). Waste from neptunium processing is also neutralized in LAW or HAW. Tank 16.1 is used infrequently for neutralization, typically for discard of dissolved scrap materials. Tank 5.2 is used for the rare evolution where HB-Line resin is digested/neutralized. During waste neutralization, radiolytically generated hydrogen is swept from tank vapor spaces by the PVV system. Ammonia vapor is a function of concentration of the ammonia in the solution and temperature of the neutralized solution and is assumed to be unaffected by PVV flow. Normal operation of the PVV system ensures the vapor spaces of the neutralization tanks are maintained well below 25% of the CLFL. Should the PVV system fail, flammable vapors (hydrogen and ammonia) can accumulate in the tank vapor space. LCO 3.3.2 requires that an alternate method of purging these vessels be established within 9 hours to prevent flammable vapors from exceeding 25% of the CLFL in the event the PVV system fails or is inoperable. Input to the analysis that determined the time to reach 25% of the CLFL in the event of a PVV system failure assumed that the ammonia concentration in the neutralized waste is less than or equal to 1500 mg/L (Ref. 90). To ensure the requirements of this SAC are met, H-Canyon operating procedures require that the waste to be neutralized be sampled prior to caustic being added to the tanks. The limit established in operating procedures provides an appropriate margin to meet the Tank Farm waste acceptance criteria and the 1500 mg/L calculated limit. If the sample results indicate that the ammonia concentration in neutralized waste would exceed 1500 mg/L, then appropriate actions will be taken to reduce the ammonia concentration in the neutralized waste. Exceeding the ammonia limit in the neutralized waste invalidates the assumptions used in the calculation (Ref. 90) and may cause the vapor space to exceed 25% of the CLFL in the event of a PVV system failure.

8.4.5.50.3 FUNCTIONAL REQUIREMENTS

The requirement is to protect the calculation input limits by ensuring the concentration of ammonia during neutralization in H-Canyon tanks is controlled to below the maximum concentration noted in the SAC. The functional requirement is to control the ammonia concentration in the vapor space to protect exceeding 25% of the CLFL in the event of a PVV system failure in the time it takes to establish alternate purge flow.

8.4.5.50.4 SPECIFIC ADMINISTRATIVE CONTROL EVALUATION

This SAC ensures that the ammonia limit in the neutralized waste assumed in the calculation to determine time to 25% of the CLFL during a PVV system failure is protected. There is no automatic control or SSC that will ensure that the ammonia concentration in H-Canyon waste neutralization tanks is below the limits assumed in the calculation. This control is an effective control to protect the ammonia limits assumed. The actions taken and procedures used to ensure compliance with this SAC are considered to be routine and that no unique human factors considerations exist. Prior to neutralization, sample results are compared to procedural limits by H-Canyon personnel. This ensures that the safety function of the SAC is met. Laboratory QA practices and sample analysis protocols ensure the validity of associated sample results.

8.4.5.51 Treatment of Organics Prior to Neutralization (TSR 5.7.2.12.j)

Waste that has been in contact with organic solutions shall be processed through an evaporator prior to neutralization.

8.4.5.51.1 SAFETY FUNCTION

This AC is designated as an SAC because it serves an SS safety function that cannot be performed by an engineered safety system. The safety function of the SAC is to protect the calculation assumption that flammable vapor due to organics are negligible.

8.4.5.51.2 SPECIFIC ADMINISTRATIVE CONTROL DESCRIPTION

During waste neutralization, radiolytically generated hydrogen is swept from tank vapor spaces by the PVV system. Due to the nature of the process, waste may have been in contact with organic solutions. Organics are minimized through decanting (See TSR SAC 5.7.2.11.a for decanting) . After decanting, solutions potentially containing trace organics are evaporated to reduce organic content to negligible levels prior to neutralization.

Failure to process waste, other than cake removal streams from centrifuges, that may have been in contact with organic solutions through an evaporator invalidates an assumption (Ref. 90) used in this analysis and may cause the flammable vapor concentration to exceed 25% of the CLFL in the event of a PVV system failure.

Cake removal streams from the centrifuges are not considered to have been in contact with organics as the organics are removed from the cake during centrifuge operations prior to slurrying the cake material from the centrifuges. Therefore, cake removal streams from the centrifuges are not required to be processed through an evaporator prior to neutralization. Any organic entering the centrifuge (e.g. from recycled sump material which has not been evaporated in Head End) will remain with the product solution and will not remain with the centrifuge cakes sent to neutralization tanks. The centrifuge is fed from a collection tank into the bottom of the centrifuge bowl, which is spinning at about 1740 rpm. Centrifugal force causes heavier particles (precipitates) to be trapped by vanes on the inside of the bowl, where they accumulate into a cake. Lighter materials such as the clarified aqueous solution and any organic flow out the top of the bowl and are discharged by gravity to a product tank. Since the organics (process solvent) have a lower density than the aqueous solution, they will preferentially flow to the product tank. In addition, when a feed batch is completed, the centrifuge is skimmed to remove process solution that is trapped in the bowl. The skimmed solution also goes to the product tank. If any organic remained in the bowl, it would be the first material skimmed. At this point, any organic that was originally in the feed would be expected to be in the product tank. In addition, to minimize the amount of fissile material in the cake, the cakes are washed by spraying them with dilute nitric acid at high pressure and the centrifuge skimmed to remove the wash solution to the product tank. The same process which ensures that the cakes contain only negligible fissile material also ensures that the cakes contain negligible organic material. The washed cakes are removed by slowing the centrifuge and spraying with dilute acid to dislodge the cake from the bowl, resulting in a slurry. The slurried cakes can be jetted from the centrifuge bowl to a neutralization tank for discard. Based on normal centrifuge operations as described above, there are negligible organics associated with the cake. The acidic stream that removes the cake has never been in contact with organic solutions.

8.4.5.51.3 FUNCTIONAL REQUIREMENTS

The requirement is to protect the calculation assumption by ensuring that the amount of organic material is negligible during waste neutralization in H-Canyon.

8.4.5.51.4 SPECIFIC ADMINISTRATIVE CONTROL EVALUATION

This SAC ensures that the organic material in waste solution is negligible in the vapor space. There is no automatic control or SSC that will ensure that the amount of organic material in H-Canyon waste neutralization tanks is negligible as assumed in the calculation (Ref. 90). This conclusion is substantiated by a technical report on steam stripping of TBP during evaporation (Ref. 59), and an engineering calculation on general organics stripping by evaporation (Ref. 83) and statistics on process sample analysis. This control is effective to protect the amount of organic material assumed. The actions taken and procedures used to ensure compliance with this SAC are considered to be routine and that no unique human factors considerations exist. This ensures that the safety function of the SAC is met.

8.4.5.52 Flammable Gas/Vapor Dilution Process Controls - Hydrogen Deflagration in the Dissolver During Super Kukla Metal Processing (TSR 5.7.2.12.k)

The nitric acid concentration in Dissolvers 6.1D or 6.4D shall be greater than or equal to 2.0M at all times when Super Kukla Metals materials are present to prevent excessive hydrogen evolution.

See Addendum 4, Section A.4.4.4.1, for additional information related to this SAC (e.g., Safety Function, Description, Functional Requirements, and Evaluation).

8.4.5.53 Flammable Gas/Vapor Dilution Process Controls - Hydrogen Deflagration in the Dissolver During Pu/Be Metal Processing (TSR 5.7.2.12.l)

The nitric acid concentration in Dissolvers 6.1D or 6.4D shall be greater than or equal to 3.0M at all times when Pu/Be Material is present to prevent excessive hydrogen evolution.

See Addendum 5, Section A.5.4.4.1, for additional information related to this SAC (e.g., Safety Function, Description, Functional Requirements, and Evaluation).

Table 8.4–1 Safety–Class Structures, Systems, and Components for H–Canyon/OF–H/HA–Line

System	Component	TSR Reference
Confinement & Ventilation	– Canyon Exhaust Air Tunnel	LCO 3.3.1, DF B.1.2
	– Canyon Exhaust Fans	LCO 3.3.1
	– Sand Filters 294–H and 294–1H	LCO 3.3.1, DF B.1.4
	– H-Canyon Building Structure	DF B.1.1
	– H-Canyon Supply Fan Interlock for low canyon exhaust air tunnel vacuum	LCO 3.3.1
	– 254–19H/292–H/292-2H Building Structure	DF B.1.5
	– Fan Damper Air System	LCO 3.3.3
	– Blanks or blank equivalents shall be installed on unused CCW high vertical and horizontal return line nozzles.	AC 5.7.2.10.a[3]
	– Exterior Waste Header Connection Legs and Concrete (Mummy) Casing	DF B.1.24
	- F1-6 Basin	DF B.1.39
Elect. Power	– 254–19H DG System	LCO 3.4.1
Effluent Monitors And Systems	– 281–4H CCW Monitors and Alarms and Automatic Timer[2]	LCO 3.2.2
	– 281–1H CCW Diversion Valves and Motor Operators	LCO 3.2.2
	– 281–1H CCW Delaying Basin to include Overflow Line to ETF	DF B.1.7
	– 281–5H SCW Delaying Basin to include Overflow Line to ETF	DF B.1.6
	– 281–5H SCW Delaying Basin Outlet Valves	LCO 3.2.1

Notes: 1. The designation AC means an administrative control as associated with this SSC.
2. When the term alarm or interlock is used in this and other SAR tables that designate SC or SS SSCs (specifically Table 8.3–2 and Section 8.4 tables), it refers to the alarm or interlock and all associated instrument loop components required for the alarm or interlock to function correctly.
3. SAC.

Table 8.4–2 Safety–Significant Structures, Systems, and Components for H–Canyon/OF–H/ HA–Line

System	Component	TSR Reference
Confinement	– 291–H Stack and Stack Liner	LCO 3.3.1
	– B–1, B–2, B–3, and B–4 Basin	DF B.1.13
Effluent Monitors and Systems	– 281–6H SCW Activity Monitors and Alarms	LCO 3.2.1
	– 281–6H SCW Diversion Valves	LCO 3.2.1
Nuclear Criticality Detection	– NIM Alarm Systems	LCO 3.2.4
Process Fire Prevention Item	– Mixer–Settler Feed High Temperature Interlocks	LCO 3.1.3
Uncontrolled Reaction Prevention	– ROV Nozzles on Tanks 12.6, 12.8, 13.5, 13.8, 14.6, 14.8, 15.1, and 15.3	AC 5.7.2.11.g[1]
	– Dissolvers 6.1D and 6.4D Air Purge System to include the Low Air Purge/Steam Interlock	LCO 3.1.9
	– PVV System to include filter inlet low vacuum alarms	LCO 3.3.2
	– Instrument Air Rotameters to Dissolvers 6.1D and 6.4D, Evaporators 6.8E, 7.6E, 7.7E, 9.1E, 9.2E, 11.3E, and 17.8E (rotameters and low instrument air pressure alarm in the Hot Canyon Control Room)	LCO 3.1.8
	– High Temperature Alarms on the E1–1 and E4–2 Tanks	LCO 3.1.13
	– High Temperature Interlocks for Evaporators 6.8E, 7.6E, 7.7E, 9.1E, 9.2E, 11.3E, 17.2E, 17.6E, and 17.8E	LCO 3.1.4
	– ARU High Temperature Interlock	LCO 3.1.12
	– Low Liquid Level Pump Cutoff Interlock on the ARU Feed Tank	LCO 3.1.12
Personnel Exposure Prevention Items	– Railroad Tunnel Shielding Door Permission Switch	AC 5.7.2.14.e[1]
	– Hot Crane Maintenance Area Shielding Door Permission Switch	AC 5.7.2.14.e[1]
	– Sampler Needle Shroud	AC 5.7.2.14.b[1]
	– Sampler Door Stops	AC 5.7.2.14.b[1]

Table 8.4–2 Safety–Significant Structures, Systems, and Components for H–Canyon/OF–H/HA–Line (Continued)

System	Component	TSR Reference
Nuclear Criticality Prevention	– Mark XII, HFIR, and Ten–Well Dissolver Inserts with Positional Plugs, and Mark XII Insert Spacers	AC 5.7.2.3.i[1]
	– Reactor Fuel Storage Racks	AC 5.7.2.3.h[1]
	– NSBs	AC 5.7.2.3.c[1] AC 5.7.2.3.d[1]
	– Mixer–Settler Neutron Monitor Interlocks	LCO 3.1.7
	– Minimum Level of Upper Heating Coil in Dissolvers 6.1D and 6.4D	DF B.1.22
	– Head End Evaporator 11.3E Low Level Steam Cutoff Interlock	LCO 3.1.6
	– Head End Strike Tank 10.2 Low Level Steam Cutoff Interlock	LCO 3.1.5
	– Head End Strike Tank 10.2 High Temperature Interlock	LCO 3.1.5
	– Evaporator 17.2E Low Level Interlock	LCO 3.1.6
	– Head End Evaporator 11.3E High SpGr Interlock	LCO 3.1.6
	– 1CU Evaporator 17.6E Low Level Interlock	LCO 3.1.6
	– Dissolver 6.1D and Dissolver 6.4D Condenser Cooling Water Interlock	LCO 3.1.10
	– Flow Alarms for First Cycle feed streams 1AF and 1AX	LCO 3.1.14
	– H–Canyon Section 13H Sump High Liquid Level Alarm	LCO 3.1.16
	– Temperature Alarms for First Cycle feed streams 1BS, 1BX, and 1CX	LCO 3.1.17
	– 1CU and 1EU Uranium Analyzer Interlocks	LCO 3.1.7
	– 1CU Conductivity Meter and Interlock	LCO 3.1.15
	– Canyon Plutonium Tank Liquid Level Instrumentation	LCO 3.1.18
	– Weir Pressure Interlock for 1C Bank	LCO 3.1.19
	– Jacketed Transfer Pipes for Fissile Material Transfer	DF B.1.26
	– Ten-Well Dissolver Insert (Super Kukla Metals)	DF B.1.35
	– Mk XII Dissolver Insert and Spacers (Pu/Be Metals)	DF B.1.36
	– Pu/Be Charging Bundle (Pu/Be Metals)	DF B.1.37
	– Pu/Be Outer Can (Pu/Be Metals)	DF B.1.38

Note: 1. SAC.

Table 8.4–3 Design Features for H–Canyon/OF–H/HA–Line

SAR Section	TSR DF Number	Design Feature Description	FC[1]	Surveillance Requirement
8.3.2.1.1	B.1.21	Cooling Water Coil Design to include material of construction	SC	None
8.3.2.1.1 8.3.2.2.1	B.1.8	H-Canyon Vessel Design to include liquid overflow line as a passive vent feature.	SC	None
8.3.2.2.3 8.3.2.2.5 8.3.2.3.3		OF-H Vessel Design to include liquid overflow line as a passive vent feature.	SS	None
8.3.2.5.6 8.3.2.8	B.1.8	Vessel Design to include materials of construction (strength).	SS	None
8.3.2.1.1 8.3.2.1.2	B.1.6	281–5H SCW Delaying Basin to include overflow line to ETF	SC	None
8.3.2.1.1 8.3.2.1.2	B.1.7	281–1H CCW Delaying Basin to include overflow line to ETF	SC	None
8.3.2.2.1	B.1.11	ROV Nozzles on Tanks 12.6, 12.8, 13.5, 13.8, 14.6, 14.8, 15.1, and 15.3	SS	AC 5.7.2.11.g[4]
8.3.2.2.1	B.1.10	PVV System design to include size of the nozzle vent area	SS	None
8.3.2.2.1 8.3.2.2.5	B.1.17	Box and Tank Decanter Design Efficiency of 90% or greater	SS	None
8.3.2.2.1	B.1.32	Physical disconnects (e.g., air gap) on the transfer piping for the tanks used to store the used 30 vol. % TBP in OF-H to ensure that the 30 vol. % TBP solvent cannot be transferred back into the canyon. Physical disconnects (e.g., air gap) on the transfer piping for the Canyon Third Level Head Tanks used to transfer 30 vol. % TBP to the canyon vessels to ensure that 30 vol. % TBP cannot be transferred to the canyon vessels.	SS	None
8.3.2.2.1	B.1.33	Physical disconnect (e.g., air gap) on the steam lines to the OF–H Segregated Solvent Tanks (includes Segregated Solvent and 30 vol. % TBP tanks).	SS	None
8.3.2.2.5	B.1.34	Physical disconnect (e.g., air gap) on the steam line to the EUS Tank Heat Exchanger.	SS	None

Table 8.4–3 Design Features for H–Canyon/OF–H/HA–Line (Continued)

SAR Section	TSR DF Number	Design Feature Description	FC[1]	Surveillance Requirement
8.3.2.2.1/	B.1.1	H-Canyon Building Structure	SC	
.2/.3/.4/.6	B.1.2	H-Canyon Exhaust Tunnel	SC	
8.3.2.3	B.1.3	291–H Stack and Stack Liner	SS	SR 4.3.1.9
.1/.2/.3	B.1.4	Sand Filters 294–H and 294–1H	SC	SR 4.3.1.8
8.3.2.4 8.3.2.6 .4/.5 8.3.2.7 8.3.2.8	B.1.5	254–19H/292–H/292-2H Building Structure	SC	
8.3.2.2.3	B.1.22	Dissolver Design including Charging Hatch	SS	None
8.3.2.2.3	B.1.9	EUS Tank Conservation Vent	SS	None
8.3.2.2.5 8.3.2.8	B.1.20	EUS Tank Design	SS	
8.3.2.2.3 8.3.2.3.3 8.3.2.8	B.1.19	Electrical System Design that suppresses an electrical spark. Includes electrical jumper length and placement of motors.	SS	None
8.3.2.2.4	B.1.18	Ammonia scrubber design ensures the Ammonia Scrubbers are at least 95% efficient.	SS	None
8.3.2.4 8.3.2.8	B.1.12	Reactor Fuel Storage Racks	SS	AC 5.7.2.3.h[4]
8.3.2.4	B.1.22	Min. level of upper heating coil in Dissolver 6.1D/6.4D	SS	None
8.3.2.4	B.1.15	Mark XII, HFIR, Ten–Well Dissolver Inserts with Positional Plugs and Mark XII Insert Spacers	SS	AC 5.7.2.3.i[4]
8.3.2.4	B.1.16	NSBs	SS	AC 5.7.2.3.d[4]
8.3.2.4	B.1.25	1AS–FS Flow System	SS	None
8.3.2.4	B.1.26	Jacketed Transfer Pipes for Fissile Material Transfer	SS	None
8.3.2.4	B.1.29	LEU Measuring Tank E1–2 Geometrically Favorable Design (including insulation jacket drain hole)	SS	None
8.3.2.4	B.1.31	LR 230 Shipping Container Geometrically Favorable Design	SS	None[2]
8.3.2.5.1	B.1.13	B1, B2, B3, and B4 Basins	SS	None
8.3.2.5.1	B.1.24	Exterior Waste Header Connection Legs and Concrete (Mummy) Casing	SC	None
8.3.2.5.1	B.1.39	F1-6 Basin	SC	None

Table 8.4–3 Design Features for H–Canyon/OF–H/HA–Line (Continued)

SAR Section	TSR DF Number	Design Feature Description	FC[1]	Surveillance Requirement
A.4.4.3.1	B.1.35	Ten-Well Dissolver Insert (Super Kukla Metals)	SS	AC 5.7.2.3.i[4]
A.5.4.3.1	B.1.36	Mk XII Dissolver Insert and Spacers (Pu/Be Metals)	SS	AC 5.7.2.3.i[4]
A.5.4.3.2	B.1.37	Pu/Be Charging Bundle (Pu/Be Metals)	SS	None
A.5.4.3.3	B.1.38	Pu/Be Outer Can (Pu/Be Metals)	SS	None
8.3.2.5.5 8.3.2.5.6 8.3.2.7 8.3.2.8	B.1.14	OF–H Basin Design (Generic Design of Basins) Specifically the 600 Basins and the Cold Chemical Storage Area Basins	SS	AC 5.7.2.10.f[4]
8.3.2.8	B.1.8	Design and Installation features of the Canyon vessels that prevent overturning during an earthquake.	SS	None
All Sections	B.1.23[3]	Fail–Safe Design of Canyon SC/SS Control Systems	SC SS	None

Notes:
1. Functional Classification Designation of DF.
2. Periodic surveillance to maintain Type B designation to be performed by TVA vendor.
3. This DF, although not specifically called out in the accident analysis, is considered a generic control that will prevent most accidents because the instruments fail in a safe manner.
4. SAC.

Table 8.4–4 Specific and Programmatic Administrative Controls for H–Canyon/OF H/HA–Line

SAR Section	TSR SAC/AC Number	Specific or Programmatic Administrative Control	FC[1]	Surveillance Requirement
8.3.2.1.1 8.3.2.1.2	5.7.2.10.g[2]	SCW shall not be released to Four Mile Creek with alpha or beta-gamma levels greater than 8000 d/m/ml.	SC	None
8.3.2.1.2 8.3.2.5.1	5.7.2.10.b[2]	All flexible jumper installation and all piping route changes shall require independent verification of correct installation.	SC	None
8.3.2.1.2	5.7.2.10.a[2]	Blanks or blank equivalents shall be installed on unused CCW high vertical and horizontal return line nozzles. These blanks or blank equivalents shall be inspected every 18 months.	SC	18 Months
8.3.2.2.1	5.7.2.11.a[2]	All acidic evaporator feed that has been in contact with organic solutions shall be processed through a decanter prior to evaporation.	SS	None
8.3.2.2.1	5.7.2.11.b[2]	Continuous layers of organic (TBP) shall not be fed to the ARU evaporator.	SS	Annual
8.3.2.2.1	5.7.2.11.g[2]	An inspection shall be completed every 18 months to ensure the red oil nozzle vents are properly installed. The tanks within H–Canyon that contain ROV nozzles to be inspected are: Tanks 12.6, 12.8, 13.5, 13.8, 14.6, 14.8, 15.1, and 15.3.	SS	18 Months
8.3.2.2.1	5.7.2.11.j[2]	All aqueous feed to a caustic evaporator (e.g., the GPE) shall have a pH greater than or equal to 7.0 except during acid flush.	SS	None
8.3.2.2.1	5.7.2.11.k[2]	Limit the single transfer amount of pure TBP into the canyon to 750 pounds.	SC	None
8.3.2.2.3	5.7.2.12.a2	A minimum nitric acid concentration of 0.3M shall be maintained in the dissolver at all times when radioactive materials are present to prevent excessive hydrogen evolution.	SS	None
8.3.2.2.3	5.7.2.12.d2	The dissolver charging hatch shall not be bolted, weighted, or fastened down is such a manner as to prevent it lifting to relieve excessive pressure in the dissolver.	SS	None

Table 8.4–4 Specific and Programmatic Administrative Controls for H–Canyon/OF H/HA–Line (Continued)

SAR Section	TSR SAC/AC Number	Specific or Programmatic Administrative Control	FC[1]	Surveillance Requirement
8.3.2.2.3	5.7.2.12.b[2]	Any material charged to the dissolver shall have hydrogen generation rates equal to or less than the 3,650 day cooled Mk–22 fuel.	SS	None
8.3.2.2.3	5.7.2.12.c[2]	When stored at the OF-H Facility, Hanford Containers, HM–Trailers, or similar type containers (e.g., Consani Containers) that contain material that will generate hydrogen by radiolysis shall be HEPA or equivalent filter vented or purged annually. If installed, the HEPA or equivalent filters shall be inspected/replaced annually.	SS	Annual
8.3.2.2.3	5.7.2.12.e[2]	Limit the off–gases evolved during the dissolution process to a maximum of 72 scfm.	SS	None
8.3.2.2.3	5.7.2.12.i[2]	The ammonia concentration in H-Canyon tanks 5.2, 8.4, 9.8, or 16.1 shall be less than or equal to 1500 mg/L in neutralized waste.	SS	None
8.3.2.2.3	5.7.2.12.j[2]	Waste that has been in contact with organic solutions shall be processed through an evaporator prior to neutralization.	SS	None
A.4.4.4.1	5.7.2.12.k[2]	The nitric acid concentration in Dissolvers 6.1D or 6.4D shall be greater than or equal to 2.0M at all times when Super Kukla Metals materials are present to prevent excessive hydrogen evolution.	SS	None
A.5.4.4.1	5.7.2.12.l[2]	The nitric acid concentration in Dissolvers 6.1D or 6.4D shall be greater than or equal to 3.0M at all times when Pu/Be Material is present to prevent excessive hydrogen evolution.	SS	None
8.3.2.2.4	5.7.2.13.a[2]	The Process Vessel Vent (PVV) filters shall be flushed or replaced prior to reaching the maximum limit of 545 kg Ammonium Nitrate.	SC	Annually
8.3.2.2.4	5.7.2.13.b[2]	An ammonia scrubber shall be in the vent jumper and operated, as required, during waste neutralization for reducing the amount of ammonia being deposited on the PVV filter.	SS	Each Use
8.3.2.2.5 8.3.2.3.3	5.7.2.16.a[2]	Limit Operating Temperatures to at least 5° C below the minimum 90° C flash point (i.e., 85° C) required by the diluent (n–paraffin) purchase specifications.	SS	None

Table 8.4–4 Specific and Programmatic Administrative Controls for H–Canyon/OF H/HA–Line (Continued)

SAR Section	TSR SAC/AC Number	Specific or Programmatic Administrative Control	FC[1]	Surveillance Requirement
8.3.2.1.1 8.3.2.1.2 8.3.2.2.2 8.3.2.2.3 8.3.2.3.2 8.3.2.5.1	5.7.2.15.c[2]	When processing or storing Pu-238, limit the amount of Pu–238 in any single FWR process tank to less than or equal to 5.0 kg. (Protects source term assumption in accident analysis.)	SC	None
8.3.2.3.3 8.3.2.8	5.7.2.11.d[2]	Segregated Solvent Gamma Activity Limits shall not exceed the following limits: First Cycle 3.0E+8 d/m/ml; Second Product Cycle 1.0E+7 d/m/ml; and Second Uranium Cycle 2.0E+7 d/m/ml.	SS	None
8.3.2.3.3	5.7.2.16.b[2]	Ensure that only n–paraffin that meets the minimum 90° C flash point is used in the H–Canyon and OF–H processes.	SS	None
8.3.2.4	5.7.2.3.e[2]	Facility modifications and activities that impact NIM coverage areas require compensatory measures as identified in the H–Canyon SAR Section 6.5.9.3 and TSR paragraph 5.7.2.3.f.	SS	None
8.3.2.4	5.7.2.3.c[2]	Both the Project Manager and the Projects Chief Engineer shall approve installation or removal of a nuclear safety blank.	SS	None
8.3.2.4	5.7.2.3.d[2]	A physical inspection shall be performed on each NSB at an interval not to exceed 10 years. This inspection shall include inspection of the barrier surface. If steam is applied directly to the NSB, the inspection interval shall be no greater than five years (see WSRC–TR–2003–00418). If other devices (e.g., valves or process blanks) block or prevent direct steam application to the NSB, the five year limit does not apply.	SS	10 Years
8.3.2.4	5.7.2.3.g[2]	Verify that no visible leaks exist in the First Cycle 1AX stream piping on the H–Canyon Second Level prior to initiation of hot feed.	SS	Each time First Cycle is started up

Table 8.4–4 Specific and Programmatic Administrative Controls for H–Canyon/OF H/HA–Line (Continued)

SAR Section	TSR SAC/AC Number	Specific or Programmatic Administrative Control	FC[1]	Surveillance Requirement
8.3.2.4	5.7.2.3.h[2]	An inspection of the structural integrity of the Reactor Fuel Storage Racks being used with any fissile material shall be completed on an interval not to exceed 10 years.	SS	10 Years
8.3.2.4	5.7.2.3.i[2]	An inspection of the structural integrity of the Dissolver inserts shall be completed each time the inserts are inserted into the Dissolver.	SS	Each insertion into the Dissolver
8.3.2.4	5.7.2.3.j[2]	Prevent personnel access to the affected areas of the Section 15 Personnel Tunnel during Section 15H or 15W Sump flushing operations.	SS	None
8.3.2.4	5.7.2.3.k[2]	Prevent personnel access to the Section 5W Cell Cover areas during neutralization operations in Tank 9.8.	SS	None
8.3.2.4	5.7.2.3.l[2]	A Fire Curtain shall be in place between Sections 6W and 7W, and between Sections 7W and 8W when personnel are allowed to access the Section 5W Cell Cover areas. This AC is only required if a credible criticality scenario exists in Tanks 8.8, 9.5 or 9.6.	SS	None
8.3.2.4	5.7.2.3.m[2]	Restrict personnel access to the Warm Canyon Crane Access Walkway and the Warm Crane Cab when the crane is in sections 2W–18W as "Areas Not Normally Occupied," as defined in N–TRT–G–00001. Personnel who are granted access to these areas shall be equipped with alarming personnel dosimeters capable of quickly detecting and alarming to a nuclear criticality.	SS	None
8.3.2.5.2	5.7.2.10.i[2]	For offsite reactor fuels processed, limit the Ru-106 to 136 Ci per Dissolver charge.	SS	None
8.3.2.5.3	5.7.2.9.d[2]	Prohibit the storage or use of HAN in H–Canyon or OF–H.	SS	None
8.3.2.5.4 8.3.2.5.5	5.7.2.10.e[2]	Valve lineups shall be independently verified for correctness for tanks with the potential for uncontrolled reactions.	SS	None

Table 8.4–4 Specific and Programmatic Administrative Controls for H–Canyon/OF H/HA–Line (Continued)

8.3.2.5.4 8.3.2.5.5	5.7.2.10.h[2]	Ferrous sulfamate piping changes shall ensure that this chemical cannot be inadvertently mixed with concentrated nitric acid in either the canyon Third Level or OF–H.	SS	None
8.3.2.5.5 8.3.2.5.6	5.7.2.10.f[2]	Inspections of the structural integrity of the OF–H Basins and curbs shall be performed at least every 18 months. (600 Basins and Cold Chemical Storage Area Basins only.)	SS	18 Months
8.3.3	5.7.2.10.l[2]	Deleted	N/A	N/A
8.3.3	5.7.2.10.n[2]	Deleted.	SS	None
8.3.2.6.1	5.7.2.14.b[2]	A shroud shall be present that extends below the tip of the sample needle or a doorstop shall be used when taking the sample.	SS	None
8.3.2.6.1	5.7.2.14.c[2]	Leather gloves and protective equipment shall be used when working near an unprotected needle.	SS	None
8.3.2.6.1	5.7.2.14.d[2]	H–Canyon sampling procedure shall provide instructions on how to obtain a sample.	SS	None
8.3.2.6.2 8.3.2.6.3	5.7.2.14.a[2]	When processing irradiated fuel, the gang valves shall be in the air blow position to allow process airflow to continue for 5 minutes after completing any steam jet solution transfer.	SS	None
8.3.2.6.2 8.3.2.6.3	5.7.2.14.i[2]	When processing irradiated fuel with the potential for severe exposure in the event of a significant radiological material release (i.e., dissolved raw material, Head End, First Cycle feed and waste, and HAW evaporation and neutralization solutions), personnel entering the HGVC or taking samples in the Hot Sample Aisle shall be required to either wear audible dosimetry or be accompanied by RCO personnel.	SS	None
8.3.2.6.2 8.3.2.6.3	5.7.2.14.j[2]	When processing irradiated fuel, unaccompanied access to the HGVC ,WGVC or the Sample Aisles shall be limited to properly trained and qualified personnel.	SS	None

Table 8.4–4 Specific and Programmatic Administrative Controls for H–Canyon/OF H/HA–Line (Continued)

SAR Section	TSR SAC/AC Number	Specific or Programmatic Administrative Control	FC[1]	Surveillance Requirement
8.3.2.6.4	5.7.2.14.e[2]	The Permission Switches shall prevent the Railroad Tunnel and Hot Crane Maintenance Shielding Doors from opening when irradiated fuel transfer operations are being conducted in the Railroad Tunnel. The switches shall be tested for proper operation every 18 months.	SS	18 Months
8.3.2.6.4	5.7.2.14.f[2]	When irradiated fuel bundles are being handled by the crane, the SOM shall maintain positive control of the key for the Railroad Tunnel and Hot Crane Maintenance Area Shielding Door Permission Switches.	SS	None
8.3.2.6.4	5.7.2.14.g[2]	When irradiated fuel bundles are being handled by the crane, personnel access to the Railroad Tunnel Airlock, Hot Crane Maintenance Area, Hot Canyon Shop, and Swimming Pool Decontamination Facility shall be restricted to personnel required for fuel handling operations.	SS	None
8.3.2.6.4	5.7.2.14.h[2]	When irradiated fuel bundles are being handled by the crane, personnel required to be in the Railroad Tunnel Airlock and the Hot Crane Maintenance Area shall either wear audible dosimetry or be accompanied by RCO personnel.	SS	None
8.6	5.7.2.17	When necessary, H–Canyon will ensure activities necessary to protect another FACILITY's SB are implemented, even if the activity is not required to protect the H–Canyon SB. Requirements that protect another FACILITY SB will be implemented in H–Canyon in a manner consistent with methods used to implement H–Canyon SB requirements. In these cases, the FACILITY protected by H–Canyon activities shall identify the appropriate SB and/or process control limits to H–Canyon.	N/A	None
8.3.4	5.7.2.12.f[2]	Prior to beginning the Repackaging activities or movement to lag storage, verify that the received LSB has at least one filter vent installed.	SS	None
8.3.4	5.7.2.12.g[2]	Prior to closure of a SLB after the Repackaging activities, verify that the SLB has at least one filter vent installed.	SS	None

Table 8.4–4 Specific and Programmatic Administrative Controls for H–Canyon/OF H/HA–Line (Continued)

SAR Section	TSR SAC/AC Number	Specific or Programmatic Administrative Control	FC[1]	Surveillance Requirement
8.3.4	5.7.2.12.h[2]	Only LSBs that have sample data to verify that the headspace is less than 10% of the LEL will be accepted at H-Canyon.	SS	None

Notes: 1. ACs are not Functionally Classified, per WSRC Procedure Manual E7, Procedure 2.25, Revision 13 (Ref. 14). The AC is credited with serving an SC or SS function as denoted in the Table.

2. SACs

8.5 NON–SC/SS DEFENSE–IN–DEPTH CONTROLS

In the past, Non–SC/SS Defense–in–Depth (DiD) accident analysis was a fundamental approach to hazard control for nonreactor nuclear facilities. There was not a minimum number of layers associated with DiD per the graded–approach concept. Each facility was analyzed independently accounting for the implemented SC/SS controls incorporated in the design and operation of the facility. Additionally, a DiD evaluation provided a more realistic estimate of the facility's radiological risks potentially affecting the offsite public than the bounding deterministic analysis documented in typical offsite dose accident analyses.

The DiD evaluation was performed in accordance with previous revisions of Procedure 2.25 of the WSRC E7 Manual (Ref. 14) and DSA Implementing Document 301–01 (Ref. 85). The DiD assessment was a team effort. The team composition was drawn from multiple disciplines (e.g., Safety Documentation, Separations Engineering, Safety Accident Engineering, Regulatory Services, and Operations) representing DOE, WSRC, and WSMS cognizant personnel.

8.5.1 H–CANYON DEFENSE-IN-DEPTH CONTROLS

The H–Canyon DiD evaluation delineated in Reference 14 was completed in two phases. Phase I credited the SC and SS items tabulated in Section 8.3 of this document. Phase II credited the SC, SS, and Hazard Analysis items (from the PHA) for the accident scenarios that exceeded the DSA Implementing Document DiD goals (Ref. 85).

Table 8.5–1, entitled "H–Canyon Non–SC/SS Defense–in–Depth Data," summarized 15 H–Canyon offsite events crediting the SC and SS items. The DiD offsite consequence goals were dependent upon the accident frequencies. The DiD items were selected to ensure that the consequences from accidental releases are less than a fraction of the DOE Evaluation Guideline (EG) which is 2.5E+04 mrem for the three frequencies listed below. The DID Evaluation Goals for the two Unlikely frequencies were 10% of the DOE EG; the Anticipated Frequency DiD goal was 2.0% of the EG.

DiD Offsite Consequence Criteria	Accident Frequency
5.0E+02 mrem	Anticipated
2.5E+03 mrem	Unlikely
2.5E+03 mrem	Extreme Unlikely

If the frequency was less than 1.0E–07, additional DiD controls were not required no matter what the offsite consequences were.

If additional SC/SS DiD controls were required to meet the DiD Offsite Consequence Criteria, they were selected from the mitigators and preventers identified during the hazard analyses. Only the controls not previously selected to provide a SC/SS function were chosen and referred to as Non–SC/SS DiD Controls.

H–Canyon is not required to have any Non–SC/SS DiD Controls. The latest revision of Manual E7, Procedure 2.25 revised the applicable limits for the Unlikely category accident negating the need for the former Non–SC/SS DiD systems in H–Canyon.

If Non–SC/SS DiD Controls are required, they will be functionally designated as GS–D. This unique designation will be used only for those controls specifically credited in the DiD evaluations. Eliminating or modifying a Non–SC/SS DiD control requires either a configuration change or a procedure change as well as a change to the identification of Non–SC/SS DiD controls listed in the DSA documentation.

8.5.2 HB–LINE DID CONTROLS

The following SSCs were credited with a DiD consequence reduction for Old HB–Line Third and Fourth Level events. Detailed write-ups were found in the HB–Line SAR (Ref. 86). They are listed here for information only.

- Old HB–Line Ventilation System (includes HB–Line Exhaust Duct in 292–H)
- H–Canyon Center Section Exhaust HEPA Filter Bank

Table 8.5–1 Former H–Canyon Non–SC/SS DiD Data

NO	Events Identified from DSA	DSA Values Crediting SC/SS Items			
		Offsite Dose (mrem)	Freq. (bin)	Non–SC/SS DiD Eval. Guidelines (mrem)	Eval. Guidelines Met? (Y/N)
1	Fire – Organic or Solvent Material (SE–01) 1st Cycle	4.7E–02	U	2.5E+03	Y
2	Fire – Organic or Solvent Material (SE–02) 2nd U Cycle	1.0E–00	U	2.5E+03	Y
3	Fire – Organic or Solvent Material (SE–03) 2nd Np Cycle	1.0E–00	U	2.5E+03	Y
4	Fire – Organic or Solvent Material (RR–01, WD–01)	1.0E–00	U	2.5E+03	Y
5	Fire – Organic or Solvent Material (SS–02)	5.2E–00	U	2.5E+03	Y
6	Explosion – Hydrogen Deflagration with Expulsion of Material (DV–01)	6.3E–00	EU	2.5E+03	Y
7	Explosion – Hydrogen Deflagration with Expulsion of Material (EV–04, HE–04, IE–03, RR–04, SE–05, WD–02)	9.3E+01	EU	2.5E+03	Y
8	Explosion – TBP/Nitric Acid Runaway Reactions (AR–01, AL–01, EV–03, RR–02, WD–04)	2.2E+02	U	2.5E+03	Y
9	Explosion – Ammonium Nitrate in PVV Filters (VE–04)	1.5E+03	EU	2.5E+03	Y
10	Transfer Error to Outside Facilities (DV–04, EV–11, HE–10, IE–12, RR–08, SE–07,WD–11)	9.1E+02	EU	2.5E+03	Y
11	Inadvertent Transfer of Process Solutions to Segregated or Circulated Cooling Water System (HC–03)	NA	BEU	NA	NA
12	Coil and Tube Failure to Segregated Cooling Water Return System (DV–07, EV–09, HE–07, IE–09, SE–08)	1.1E+03	U	2.5E+03	Y
13	Coil and Tube Failure to Circulated Cooling Water Return System (DV–09, EV–10, HE–08, IE–14, SE–09, WD–07)	3.3E+02	EU	2.5E+03	Y
14	Natural Phenomena – Earthquake (HC–11)	1.8E+02	U	2.5E+03	Y
15	Ruthenium Volatilization (DV–05, HE–06)	3.5E+01	A	5.0E+02	Y

8.6 SUPPORT FOR OTHER FACILITY AUTHORIZATION BASES

The HLW accident analysis for the tank farm makes certain assumptions about the characteristics of the waste received in the HLW tanks. One of these characteristics is the temperature of the liquid waste entering the "organic" designated pump tanks. Section 13.3.4 of X–SD–G–00001 (Ref. 87) requires a maximum 70° C temperature for the liquid waste entering the HLW Tank Farm tanks. To protect the HLW accident analysis requirements for the "organic" designated pump tanks. H–Canyon must ensure that the temperature of the waste transferred from H–Canyon to the HLW Division Tank Farm Pump Tanks is less than the maximum temperature assumed in the HLW accident analysis. This programmatic control is not required to prevent or mitigate any accident in either the HAW or LAW systems in H–Canyon, but it supports the accident analysis for the HLW Waste Tanks. Liquid waste transfers to 'non–organic' waste or pump tanks are limited to only trace quantities of "organics." This equipment is functionally classified as GSs, unless it has a higher classification for some other accident scenario in this SAR. Normal process operations on the waste streams sent to the HLW Divisions Tank Farm limit the temperature to about 50° C. HCP Engineering has no basis to classify the temperature instruments higher than GS.

H–Canyon understands that it has an obligation to protect the DSA requirements for other facilities just as if the other facilities have to protect the H–Canyon DSA. Therefore, when necessary, H–Canyon will ensure activities necessary to protect another facility's DSA are implemented, even if the activity is not required to protect the H–Canyon DSA. Requirements that protect another Facility DSA will be implemented in H–Canyon in a manner consistent with methods used to implement H–Canyon DSA requirements. In these cases, the Facility protected by H–Canyon activities shall identify the appropriate DSA and/or process control limits to H–Canyon.

8.7 REFERENCES

1. Hazard Categorization and Accident Analysis Techniques for Compliance with DOE Order 5480.23, Nuclear Safety Analysis Reports. DOE–STD–1027–92, U.S. Department of Energy, Washington, DC, December 1992.

2. Goetz, T.G. Radiological and Hazardous Material Inventory and Hazardous Categorization for the H Canyon Facility. S–CLC–H–00221, Westinghouse Savannah River Company, Aiken, SC, April 1995.

3. Pickett, C.E. Review of Calc–Note Which Documents the Determination of Accident Consequences for the H–Canyon SAR Addendum Rev 1. NMP–EHA–940205, Rev 1, Westinghouse Savannah River Company, Aiken, SC, December 1994.

4. Chandler, M.C. Revised Source Terms for H–Canyon. NMS–ETS–98–0089, Westinghouse Savannah River Company, Aiken SC, November 1998.

5. Williams, J.C. Input Data for the Outside Facilities H–Area SAR Addendum 1 Revision (U). NMS–SDG–96–0043, Westinghouse Savannah River Company, Aiken, SC, July 1996.

6. SRS Environmental Report. WSRC–IM–91–28, Vol. 1, Westinghouse Savannah River Company, Aiken, SC.

7. Radiation Protection of the Public and the Environment. DOE Order 5400.5, U.S. Department of Energy, Washington, DC, February 1990.

8. H–Canyon Preliminary Hazards Analysis. WSRC–TR–95–0035, Rev. 4, Westinghouse Savannah River Company, Aiken, SC, February 2005

9. Deleted.

10. Guidance for Preparation of DOE 5480.22 (TSR) and DOE 5480.23 (SAR) Implementation Plans. DOE–STD–3011–94, U.S. Department of Energy, Washington, DC, November 1994.

11. Nuclear Safety Analysis Reports. DOE Order 5480.23, U.S. Department of Energy, Washington, DC, April 1992.

12. Toxic Chemical Hazard Classification and Risk Acceptance Guidelines for Use in DOE Facilities. WSRC–MS–92–206, Rev. 1, Westinghouse Savannah River Company, Aiken, SC, April 1993.

13. Safety Analysis and Review Systems. DOE Order 5481.1B, U.S. Department of Energy, Washington, DC, May 1987.

14. Conduct of Engineering and Technical Support. WSRC Procedure Manual E7, Westinghouse Savannah River Company, Aiken, SC.

15. Facility Safety Document Manual (U). WSRC Procedure Manual 11Q, Westinghouse Savannah River Company, Aiken, SC.

16. Safety Analysis 200–Area Savannah River Plant, H–Canyon Operations. DPSTSA–200–10, Supp 5, February 1986.

17. Safety Analysis – 200 Area Savannah River Site Separations Area Operations Building 211–H, Outside Facilities. DPSTSA–200–10, Supp–11, Rev 1, January 1993.

18. Segregated Cooling Water Activity Basin Potential Activity Release Calculations (U). M–CLC–A–00136, Westinghouse Savannah River Company, Aiken, SC, June 1997.

19. Consequence Tables for the Leakage of Low Activity Waste (LAW) in the H–Area Delaying Basin (U). S–CLC–H–00581, Rev 0, Westinghouse Savannah River Company, Aiken, SC, June 1997.

20. Consequence Tables for the Leakage of Frame Waste Recovery (FWR) Effluent in the H–Area Delaying Basin (U). S–CLC–H–00584, Rev 0, Westinghouse Savannah River Company, Aiken, SC, June 1997.

21. Structural Integrity of F and H Canyon Coils in Process and Storage Tanks, EPD–SSA–94–0227. Westinghouse Savannah River Company, Aiken, SC, August 1994.

22. F–Canyon Tank 17.1 and H–Canyon Tank 17.2E Cooling Coil Fracture Analysis (U). T–CLC–F–00022. Westinghouse Savannah River Company, Aiken, SC, August 2001.

23. Lux, C.R. Frequency of Radiological Release Due to H–Canyon Highly Contaminated Cooling Water (U). S–CLC–H–00704, Rev 1, Westinghouse Savannah River Company, Aiken, SC, May 1999.

24. Contamination of Cooling Water by Flexible Jumper Transfer Error (U). S–CLC–H–00302, Westinghouse Savannah River Company, Aiken, SC, July 1995.

25. Uncontrolled TBP–Nitric Acid BIO Risk Analysis. ECS–SSS–950007, Westinghouse Savannah River Company, Aiken, SC, February 1995.

26. (Deleted).

27. Laurinat, J.E., et al. Analysis of Steam Heating of TBP/N–Paraffin/Nitric Acid Mixtures (U). WSRC–RP–98–00171, Rev 1, Westinghouse Savannah River Company, Aiken, SC, July 1998.

28. Isothermal Heat Measurement of TBP–Nitric Acid Solutions. WSRC–TR–94–0540, Westinghouse Savannah River Company, Aiken, SC, December 1994.

29. Colven, Jr. T.J. Nitric Acid Recovery Units Permissible Steam Pressure in Reboilers. DPST–56–243, E. I. du Pont de Nemours & Company, Savannah River Plant, Aiken, SC, April 1956.

30. (Deleted)

31. Rudisill, T.S. and Crooks, W.J. Initiation Temperature for Runaway Tri–n–Butyl Phosphate/Nitric Acid Reaction. WSRC–TR–2000–00427, Rev. 0, Westinghouse Savannah River Company, Aiken, SC, October 2000.

32. Safe Concentration of Nitric Acid Contacted with TBP. SRT–CTS–95–0021, Westinghouse Savannah River Company, Aiken, SC, January 1995.

33. Pierce, R.A. Efficiency Testing of the H–Canyon 13.6–1S and 16.1–1S Decanters. WSRC–RP–98–00556, Westinghouse Savannah River Company, Aiken, SC, July 1998.

34. Kyser, E.A. and Laurinat J.E. FWR Column Resin–Nitric Acid Reaction During Flow Interruptions. SRTC–CTS–95–0076, Rev. 1, Westinghouse Savannah River Company, Aiken, SC, May 1995.

35. Jwayyed, A.M. Memorandum, Process Vessel Vent System Flow Verification. NMS–EFA–99–0056, Westinghouse Savannah River Company, Aiken, SC, September 1999.

36. H-Canyon Nuclear Criticality Safety Evaluation: Double Contingency for Receipt, Storage, and Neutralization of HB-Line Plutonium/Uranium Solutions Poisoned with Gadolinium (U). N-NCS-H-00179, Rev. 1, Westinghouse Savannah River Company, Aiken, SC, April 2005.

37. H–Canyon Double Contingency Analysis (U). N–NCS–H–00037, (Latest Revision), Westinghouse Savannah River Company, Aiken, SC.

38. Vitaliani, E.M. Resin Digestion Tank Uncontrolled Reaction/Fire Bounding Consequence Calculation. S–CLC–H–00845, Rev. 0, Westinghouse Savannah River Company, Aiken, SC, March 2001.

39. Pate, K.J. Tank 5.2 – Plutonium Heat Loading Calculation. X–CLC–H–00144, Rev. 0, Westinghouse Savannah River Company, Aiken, SC, April 2001.

40. Earthquake (0.2g) Induced Resin Column Fire Frequency Fault Tree (U). S–CLC–H–00274, May 1995.

41. Williams, J.C. Fire Induced Criticality in the OF–H A–Line Tanks. S–CLC–H–00928, Rev. 0, Westinghouse Savannah River Company, Aiken, SC, December 2001.

42. Knight, J.C. Unsteady State Temperature Modeling for H–Canyon First Cycle (U). SE–970008, Westinghouse Savannah River Company, Aiken, SC, April 1998.

43. East, J.M. MACCS H–Canyon Addendum 6 Consequence Calculations. S–CLC–H–00289, Rev. 0, Westinghouse Savannah River Company, Aiken, SC, June 1995.

44. Williams, J.C. Consequences of a Small Fire in First Cycle Solvent Extraction (U). S–CLC–H–00646, Rev 0, Westinghouse Savannah River Company, Aiken, SC, April 1998.

45. Williams, J.C. and Hearn, W.H. Comparison of the Programmable Logic Controller (PLC) Control System to the Previous Safety Significant Control Systems in the H–Canyon First Cycle Solvent Extraction Process (U). WSRC–RP–97–00941, Rev 1, Westinghouse Savannah River Company, Aiken, SC, February 1998.

46. Lux, C.R. Safety Impact of the Installation of the H–Canyon First Cycle PLC (U). S–CLC–H–00603, Rev 1, Westinghouse Savannah River Company, Aiken, SC, March 1998.

47. Coutts, D.A. The Building Specific Frequency of Wildland Fire Threats at SRS. F–CLC–G–00025, Westinghouse Savannah River Company, Aiken, SC, August 2000.

48. Gundy, L.M. Nuclear Criticality Safety Evaluation: Revised Mk16B and Mk22 Limits for the 70 Ton Shipping Cask. N–NCS–H–00052, Rev 0, Westinghouse Savannah River Company, Aiken, SC, September 1997.

49. Basis for Interim Operation for K–Reactor in Cold Standby (U). WSRC–RP–94–207, Westinghouse Savannah River Company, Aiken, SC, February 1995.

50. Reed, R.L. 100 Area Irradiated Fuel Consolidation and Horizontal Storage Criticality Concerns (U). SRT–CMA–9300074, Rev 0, Westinghouse Savannah River Company, Aiken, SC, January 1994.

51. Flanders, H.E. H–Canyon Bundle Storage Racks Seismic Analysis (U). T–CLC–H–00329, Rev 1, Westinghouse Savannah River Company, Aiken, SC, October 1997.

52. (Deleted)

53. (Deleted)

54. Campbell, T.G. Nuclear Criticality Safety Controls H–Canyon First Solvent Extraction Cycle. WSRC–RP–98–01247, Rev 0, Westinghouse Savannah River Company, Aiken, SC, October 1998.

55. Justification for Continued Operation: H–Canyon First Cycle Solvent Extraction Operations (U). WSRC–RP–98–01248, Rev 0, Westinghouse Savannah River Company, Aiken, SC, October 1998,

56. Nuclear Criticality Safety Evaluation – HEU Down–Blend Loading Station and Measuring Tank. N–NCS–H–00126, Rev A (August 2001), Westinghouse Savannah River Company, Aiken, SC.

57. Pickett, C.E. Use of 1CU Conductivity Meter to Detect Conditions Causing Uranium Reflux or Loss. NMS–EHA–99–0102, Westinghouse Savannah River Company, Aiken, SC 29808, September 1999.

58. (Deleted).

59. R. A. Pierce. Stripping of Tributylphosphate (TBP) with Steam During Evaporation. WSRC-TR-2000-00158, Westinghouse Savannah River Company, Aiken, SC.

60. Morton, G.R. and Williamson, T.G. NCSE Criticality Analysis for Trough Under the H–Canyon Warm Sample Aisle HB–Line Transfer Pipe. N–NCS–H–00074, Rev 0, Westinghouse Safety Management Solutions, Aiken, SC, January 1998.

61. Lux, C.R. Frequency of a Criticality in the 211–H General Purpose Evaporator (U). S–CLC–H–00601, Rev. 1, Westinghouse Savannah River Company, Aiken, SC, October 2003.

62. Swingle, R.S. Volatile Ruthenium Chemistry An Answer to RTS 925–S, DPST–80–254, E. I. du Pont de Nemours & Company, Savannah River Plant, Aiken, SC, January 1980.

63. H–Canyon Ruthenium Volatilization Consequence Analysis (U). S–CLC–H–00583, Rev 0, Westinghouse Savannah River Company, Aiken, SC, June 1997.

64. F–Canyon Chemical Hazards Assessment. WSRC–TR–94–0552, Westinghouse Savannah River Company, Aiken, SC, February 1995.

65. Dickson, P.W. Sample Aisle & Gang Valve Corridor Reviews. NMP–ENG–94–0182, Westinghouse Savannah River Company, Aiken, SC, December 1994.

66. Burckhalter, L.T. H–Canyon Hot Gang Valve Corridor Suckback Dose Rates. ESH–HPT–94–0277, Westinghouse Savannah River Company, Aiken, SC, December 1994.

67. Taus, L.B. H–Canyon Basis for Interim Operation Dose Rates (U). S–CLC–H–01006, Rev. 0, Westinghouse Savannah River Company, Aiken, SC, September 2003.

68. Radiological Control Manual. WSRC Procedure Manual 5Q, Westinghouse Savannah River Company, Aiken, SC.

69. Dickson, P.W. H–Canyon Gang Valve Exposure and Sample Aisle Exposure. NMP–ENG–95–0008. Westinghouse Savannah River Company, Aiken, SC, January 1994.

70. Manual Standard 01060. WSRC–TM–95–1, Westinghouse Savannah River Company, Aiken, SC, February 1995.

71. McKeel, C.A. PC–3 Qualification of Uranyl Nitrate Storage Tank (U). T–CLC–H–00520, Rev. 1, Westinghouse Savannah River Company, Aiken, SC, June 2001.

72. Shadday, M.A. F–Canyon Seismic Induced Contaminated Release. SRT–EMS–96–0059, Westinghouse Savannah River Company, Aiken, SC, August 1996.

73. Macaraeg, E.B. 221–F and 221–H Canyon Evaluation of Expansion Joints (U). T–CLC–G–00071, Rev. 0. Westinghouse Savannah River Company, Aiken, SC, October 1996.

74. Rawls, G.B. Canyon Fragility Analysis and Annual Probability of Seismic Failure (U). T–CLC–F–00072, Rev. 1. Westinghouse Savannah River Company, Aiken, SC, October 1996.

75. USQ–SEPGEN–96–0004. "Structural Evaluation Of H–Canyon and HB–Line (U)." Westinghouse Savannah River Company, Aiken, SC, September 1996.

76. Ignition Probability Following a Seismic Event and Solvent Spill in H–Canyon. S–CLC–H–00273, Rev. 0. Westinghouse Savannah River Company, Aiken, SC, May 1995.

77. Methodology Manual for Nuclear Processes Safety Analysis. WSRC–TM–90–13, Westinghouse Savannah River Company, Aiken, SC, May 1992.

78. Seismic and Tornado Evaluation of Building 221–H at the Savannah River Plant, Aiken, South Carolina. EDAC–253–030.02, Prepared for E. I. du Pont de Nemours & Co. by Engineering Decision Analysis Company, Inc, Palo Alto, CA, October 1981.

79. General Design Criteria. DOE Order 6430.1A, U.S. Department of Energy, Washington, DC, April 1989.

80. Uranyl Nitrate Storage Tank. WSRC–TR–92–251, DOE Order 6430.1A, Design Compliance Review, Westinghouse Savannah River Company, Aiken, SC.

81. Lux, C.R. Frequency of a Criticality Due to Freezing of New HEU Storage Tank (U). S–CLC–H–00481, Rev 1, Westinghouse Savannah River Company, Aiken, SC, October 1996.

82. Functional Classification Report for the H–Canyon Facility. WSRC–TR–2001–00038, (Latest Revision), Westinghouse Savannah River Company, Aiken, SC.

83. L. R. Canas. Removal of Trace Organics from Laboratory Waste by Evaporation. X-CLC-F-00399, Westinghouse Savannah River Company, Aiken, SC.

84. Implementation Guide for Use in Developing Technical Safety Requirements. DOE Guide 423.1–1, U.S. Department of Energy, Washington, DC, October 2001.

85. Selection of Non–SC/SS Defense–in–Depth Controls. ABID 301–01, Westinghouse Savannah River Company, Aiken, SC, September 1997.

86. HB–Line Safety Analysis Report. WSRC–SA–2001–00009, (Latest Revision), Westinghouse Savannah River Company, Aiken, SC.

87. Waste Acceptance Criteria. X–SD–G–00001, (Latest Revision), Westinghouse Savannah River Company, Aiken, SC.

88. Lux, C.R. Fault Tree Analysis of Red Oil Reactions in H–Canyon Evaporators (U). S-CLC-H-00227, Rev. 1, Westinghouse Savannah River Company, Aiken, SC, October 2003.

89. Dyer, W.G. H–Canyon Vessels Requiring Red Oil Vent (ROV) Nozzles (U). X-CLC-H-00304, Rev. 1, Westinghouse Savannah River Company, Aiken, SC, December 2003.

90. Time to CLFL and Purge Flow Rates for Neutralization Tanks (U), S-CLC-H-01094, Rev. 0, Washington Savannah River Company, Aiken, SC, January 2007.

91. Deleted.

92. Deleted.

93. Scaggs, K.D. Old HB–Line Exhaust Duct Leak Flow Calculation. M–CLC–H–02115, Revision 0, Westinghouse Savannah River Company, Aiken, SC, June 2000.

94. Scaggs, K.D. Old HB–Line Exhaust Duct Leak Flow Calculation. M–CLC–H–02276, Revision 0, Westinghouse Savannah River Company, Aiken, SC, June 2001.

95. Scaggs, K.D. Old HB–Line Exhaust Duct Leak Flow Calculation. M–CLC–H–02332, Revision 0, Westinghouse Savannah River Company, Aiken, SC, November 2001.

96. Scaggs, K.D. Old HB–Line Exhaust Duct Leak Flow Calculation. M–CLC–H–02372, Revision 0, Westinghouse Savannah River Company, Aiken, SC, May 2002.

97. Scaggs, K.D. Old HB–Line Exhaust Duct Leak Flow Calculation. M–CLC–H–02412, Revision 0, Westinghouse Savannah River Company, Aiken, SC, December 2002.

98. HB–Line Double Contingency Analysis (U). N–NCS–H–00120, (Latest Revision), Westinghouse Savannah River Company, Aiken, SC.

99. USQ–SEPGEN–2000–0002. "Evaluation Of A Leak From The H–Canyon Exhaust Tunnel Into The Old HB–Line Exhaust Duct (U)." Westinghouse Savannah River Company, Aiken, SC, June 2000.

100. Time to CLFL and PVV Purge for Tanks 9.7 and 12.4. X-CLC-H-01095, Rev. 0, Washington Savannah River Company, Aiken, SC, January 2007.

101. Dyer, W.G. H–Canyon Hydrogen Generation Rates Due to Radiolysis. X-CLC-H-00361, Rev. 1, Washington Savannah River Company, Aiken, SC, January 2007.

102. Yates, K.R. Technical Basis for the Use of Alarming Personal Criticality Detectors to Augment Permanent Nuclear Incident Monitor (NIM) Systems in Areas Not Normally Occupied. N–TRT–G–00001, Revision 0, Westinghouse Savannah River Company, Aiken, SC, April 2003.

103. Martino, N.S. Gamma Activity Limits for H–Canyon Segregated Solvent (U). X–CLC–H–00404, Rev. 0, Westinghouse Savannah River Company, Aiken, SC, September 2003.

104. Consolidated Hazards Analysis Process (CHAP) Methodology Manual. WSRC–IM–2002–00003, Revision 0, Westinghouse Savannah River Company, Aiken, SC, August 2002.

105. Wallace, R.M. Ammonium Nitrate in the Vessel Vent Systems. DPST–76–421, E. I. du Pont de Nemours & Company, Savannah River Plant, Aiken, SC, November 1976.

106. Oxley, J.C., Kaushik, S.M., and Gilson, N.S. "Thermal Decomposition of Ammonium Nitrate–Based Composites." Thermochimica Acta, Vol. 153, pages 269–286.

107. Walser, R.L. "Purex Filter Safety Analysis Study." Rockwell Hanford Operations. RHO–CD–904, February 1980.

108. Bronikowski, M.G. and Laurinat, J.E. Spatial Distribution of Particulate Material Deposited in the H–Area Process Vessel Vent Filters (U). WSRC–TR–2001–00059, Westinghouse Savannah River Company, Aiken, SC, March 2001.

109. Dyer, W.G. Acid Recovery Unit (ARU) Criticality Incredibility. X–CLC–H–00478, Rev. 0, Westinghouse Savannah River Company, Aiken, SC, October 2003.

110. Roy, B.N. Frequency of Criticality in EUS Tank. S–CLC–H–01010, Rev. 0, Westinghouse Savannah River Company, Aiken, SC, October 2003.

111. Mickalonis, J.I. and Rawls, G.B. Corrosion Assessment and Reliability of Nuclear Safety Blanks: Technical Review (U). WSRC–TR–2003–00418, Rev. 0, Westinghouse Savannah River Company, Aiken, SC, October 2003.

112. Hyder, M. L. Safe Conditions for Contacting Nitric Acid or Nitrates with Tri–N–Butyl Phosphate (TBP). WSRC–TR–94–059, Westinghouse Savannah River Company, Aiken, SC, January 1994.

113. Nichols, G.S. Decomposition of the Tributyl Phosphate – Nitrate Complexes. DP–526, E. I. du Pont de Nemours & Co., Savannah River Laboratory, Aiken, SC, November 1960.

114. Kennedy, W.N. Canyon Structural Analysis for Red Oil Explosion. EPD–SE–94–007:63, Westinghouse Savannah River Company, Aiken, SC, February 1994.

115. Pierce, R.A. Stripping of Tributyl Phosphate (TBP) With Steam During Evaporation (U). WSRC–TR–2000–00158, Westinghouse Savannah River Company, Aiken, SC, May 2000.

116. Fauske, H.K. Tributyl Phosphate–Nitric Acid Reaction and Vent Requirement. WSRC–TR–94–0501 (FAI/94–68), Westinghouse Savannah River Company, Aiken, SC, July 1994. (Fauske and Associates, Inc. Burr Ridge, IL.)

117. Pierce, R.A. and Thompson, M.C. Behavior of TBP and DBP During the Evaporation of Enriched Uranium Solutions (U). WSRC–TR–99–00040, Westinghouse Savannah River Company, Aiken, SC, January 1999.

118. Martino, N.S., Price, M.R. Evaluation of Ammonium Nitrate Accumulations on Process Vessel Vent Filters. X–TRT–H–00001, Rev. 0, Westinghouse Savannah River Company, Aiken, SC, September 2003.

119. Weitz, F.R. H–Canyon Dissolver Hydrogen Dilution Calculations Using Off–Gas Specific Lower Flammability Limit (LFL). X–CLC–H–00473, Rev 0, Westinghouse Savannah River Company, Aiken, SC, October 2003.

120. USQ–HCAN–2002–02402. Mixer–Settler Interface Controller Failure Impact on Safe Operation of the Solvent Extraction Cycles (U). Westinghouse Savannah River Company, Aiken, SC, October 2003.

121. Onsite Safety Assessment for High Activity Waste Tank Trailer. S–OSA–G–00006, Rev. 0, Westinghouse Savannah River Company, Aiken, SC, December 2001.

122. Onsite Safety Assessment for LR–56 Tank Trailer. S–OSA–G–00011, Rev. 0, Westinghouse Savannah River Company, Aiken, SC, October 2002.

123. Dyer, W.G. and Williams, J.C. Impact of Temperature on Hydrogen Lower Flammability for Separations Facilities. WSRC–TR–2003–00313, Rev. 0, Westinghouse Savannah River Company, Aiken, SC, July 2003.

124. Joshi, J.R. Wind/Tornado/Seismic Evaluation of Stack. T-CLC-H-00130, Rev. 0, Westinghouse Savannah River Company, Aiken, SC, May 1995.

125. Specific Administrative Controls. DOE-STD-1186-2004. U. S. Department of Energy, Washington, DC, August 2004.

126. H-Canyon & Outside Facilities Technical Safety Requirements. WSRC-TS-96-19, (Latest revision), Washington Savannah River Company, Aiken, SC.

127. Blanton, C.H. Aircraft Impact Frequencies for SRS Facilities. S–CLC–G–00278, Rev 0, Westinghouse Savannah River Company, Aiken, SC, April 2002.

128. Accident Analysis for Aircraft Crash into Hazardous Facilities. DOE-STD-3014-96, U.S. Department of Energy, Washington, DC, October 1996.

129. Hallman,. D.F. Evaluation of Accountable Sealed Sources in H-Canyon. S-CLC-H-01042, Rev. 0, Westinghouse Savannah River Company, Aiken, SC, June 2005.

130. Sarrack, A. G. Contamination of H-Canyon Segregated Water by Cooling Coil Leaks (U), S-CLC-H-00332, Rev. 0. Westinghouse Savannah River Company, Aiken, SC, August 1995.

131. Hardy, B.J. Hypothetical Release Due to Under-Wall Leakage in the Segregated Cooling Basin. M-CLC-H-02683, Rev.0. Westinghouse Savannah River Company, Aiken, SC, July 2005.

132. Kwon, K.C. 6.4D Dissolver Evaporation and Condenser Column Cooling Calculation. M–CLC–H–02521, Rev. 0. Westinghouse Savannah River Company, Aiken, SC. February 2004.

133. Tufts, J.P. 6.1D Dissolver and Column Cooling Water Flow. M–CLC-H-01897, Rev. 0. Westinghouse Savannah River Company, Aiken, SC, April 1999.

134. Sprankle, R.A. Frequency of a Large Seismically Induced Fire in the 245-19H Diesel Generator Building. F-CLC-H-00127, Rev. 0, Washington Savannah River Company, Aiken, SC, March 2006.

135. Sprankle, R.A. Frequency of a Large Seismically-Induced, or High Wind-Induced Fire in the 292-H and 292-2H Fan House Buildings. F-CLC-H-00128, Rev. 0, Washington Savannah River Company, Aiken, SC, April 2006.

136. Kelley, J.P. 254-19H PC3 Tornado/Seismic Interaction Study. T-CLC-H-00792, Rev.0, Washington Savannah River Company, Aiken, SC, March 2006.

137. Lux, C.R. Frequency of a Utility Pole Striking H-Canyon Diesel Generator Exhaust or Vent Pipe. S-CLC-H-01071, Rev.0. Washington Savannah River Company, Aiken, SC, April 2006.

138. Tran, T.M. Consolidated Hazards Analysis for the Repackaging of Waste Stored in Large Steel Boxes for H-Canyon. WSRC-TR-2004-00609, Rev. 34, Washington Savannah River Company, Aiken, SC, July 2006.

139. Bullington, M.F. Sampling of Black Boxes for VOCs Final Report. OBU-SWO-2005-00051, Westinghouse Savannah River Company, Aiken, SC, August 2005.

140. Potential for Flammable Non-Drum TRU Waste Containers. NI-SWMF-05-005, Washington Savannah River Company, Aiken, SC, May 2005.

141. Non-Flammability of Vented Black Boxes. OBU-TRU-2006-00065, Washington Savannah River Company, Aiken, SC, June 2006.

142. Position for Determining Gas Phase Volatile Organic Compound Concentrations in Transuranic Waste Containers. INEL-95-0109, Rev. 1, Idaho National Engineering Laboratory, Idaho Falls, ID, August 1995.

143. Bullington, M. Maximum PEC vs. Number of Filter Vents Installed, S-CLC-E-00156, Rev. 5, Washington Savannah River Company, March 2007.

144. USQ-HCA-2006-00701, Evaluation of 291-H Stack Failure. Washington Savannah River Company, Aiken, SC. July 2006.

145. Peregoy W. E. T-CLC-H-00312, Rev. 3, 291-H & F Stack PC-2 Seismic Wind Evaluation. Washington Savannah River Company, Aiken, SC. April 2006.

146. Kennedy, W. N. T-CLC-H-00799, Rev. 0, Evaluation of 291-H and 291-F Stack Collapse. Washington Savannah River Company, Aiken, SC. March 2006.

147. Peregoy, W. E. T-CLC-H-00798, Rev. 1, Structural Evaluation of the Effects of 291-H Chimney Liner Collapse. Washington Savannah River Company, Aiken, SC. April 2006.

148. Harris, W. E. M&O-MDO-2006-00217, Submittal for Review the Evaluation of Safety for H-Canyon to Address PISA PI-06-004. Washington Savannah River Company, Aiken, SC. July 2006.

149. Williams, J. C. USQ-HCA-2006-00119, Rev. 0, Evaluation of H-Canyon Ventilation System With Zero or One Exhaust Fan Operating. Washington Savannah River Company, Aiken, SC. July 2006.

150. East, J. M. S-CLC-H-00700, Rev. 0, H Canyon Radiological Source Term and Consequence Analysis (U). Washington Safety Management Solutions, Aiken, SC. April 1999.

151. Cappucci, A. J. S-CLC-H-01085, Rev. 0, PI-06-004 Evaluation of the H-Canyon Consequences for the Design Basis Earthquake (U). Washington Safety Management Solutions, Aiken, SC. October 2006.

152. Strieper, E. L. NMS-EHA-960111, Potential For Uncontrolled Reactions 3rd Level Head Tanks (U). Westinghouse Savannah River Company, Aiken, SC. September 1996.

153. Bartholomay, R. W. & Reed, R. L. N-NCS-H-00145, 12-Rad Zone Analyses of H-Canyon (Building 221-H) (U). Washington Safety Management Solutions, Aiken, SC. May 2003.

154. Reed, R. L. N-NCS-H-00160, 12-Rad Zone Analyses of H-Canyon (Building 221-H): Section 5 Cell Covers and Truck Well of Warm Canyon (U). Washington Safety Management Solutions, Aiken, SC. May 2003.

155. Barnett, M. H. & Biswas, D. N-NCS-H-00153, 12-Rad Zone Analyses of H-Canyon (Building 221-H) Warm Canyon Crane Access Walkway, Crane Cab, and Warm and Hot

Canyon Crane Maintenance Area (U). Washington Safety Management Solutions, Aiken, SC. May 2003.

156. Dyer, W.G. H-Canyon Hydrogen Generation in Evaporators Due to Radiolysis. X-CLC-H-00360, Rev. 1. Washington Savannah River Company, Aiken, SC, January 2007.

157. Dyer, W.G. H-Canyon Hydrogen Generation in Dissolvers Due to Radiolysis. X-CLC-H-00365, Rev. 1. Washington Savannah River Company, Aiken, SC, January 2007.

158. Dyer, W.G., Campbell, T.G., Extent of Condition for Flammable Gasses in H-Canyon Processes, WSRC-TR-2007-00029, Rev. 2, Washington Savannah River Company, Aiken, SC, February 2007.

159. Babineau, W.R., H-Canyon Process Vessel Vent Flow Rate. X-CLC-H-00026, Rev. 0, Westinghouse Savannah River Company, Aiken, SC, March 1995.

160. Dyer, W.G., Segregated and Circulated Cooling Water TSR Limit. S-CLC-H-01013, Rev. 0, Westinghouse Savannah River Company, Aiken, SC, October 2003.

9.0 CONCLUSION

The safety analysis of H–Canyon, OF–H, and its related support facilities indicates that the operation of these facilities to support the current and planned missions does not present undue risk to the general public, site workers, facility workers, or the environment. This conclusion is based on the following:

- The results of the hazard and accident analyses
- The verification of the adequacy of the safety envelope by identification of controls, procedures and/or preventive and mitigative features against release of hazardous materials and
- The implementation of aggressive safety management programs that ensure facility safety by adhering to principles of sound safety engineering and management practices.

This conclusion is further supported by implementation of corrective and compensatory measures to reduce the frequencies and/or consequences of Class I and II accident scenarios.

10.0 DRAWINGS

The following drawings are H–Canyon and OF–H systems and structures at the time this SAR was prepared. However, due to proposed activities, upgrades to the systems, and modifications to support new missions or reduce releases to the environment, the actual system configurations are subject to change. The drawings will provide the reader with an understanding of the basic layout and mode of operation of the various systems. Additionally, the location of the system in relation to other H–Canyon and OF–H systems are shown. These drawings, intended to be a "snapshot in time," will be reviewed and, if necessary, updated with each SAR revision.

The drawings were revised in December 1998, November 1999, October 2001 and June 2002 to reflect conditions current at that time. The drawings were revised to support SAR Revision 1.

Figure Deleted

Figure 10–1 (Deleted)

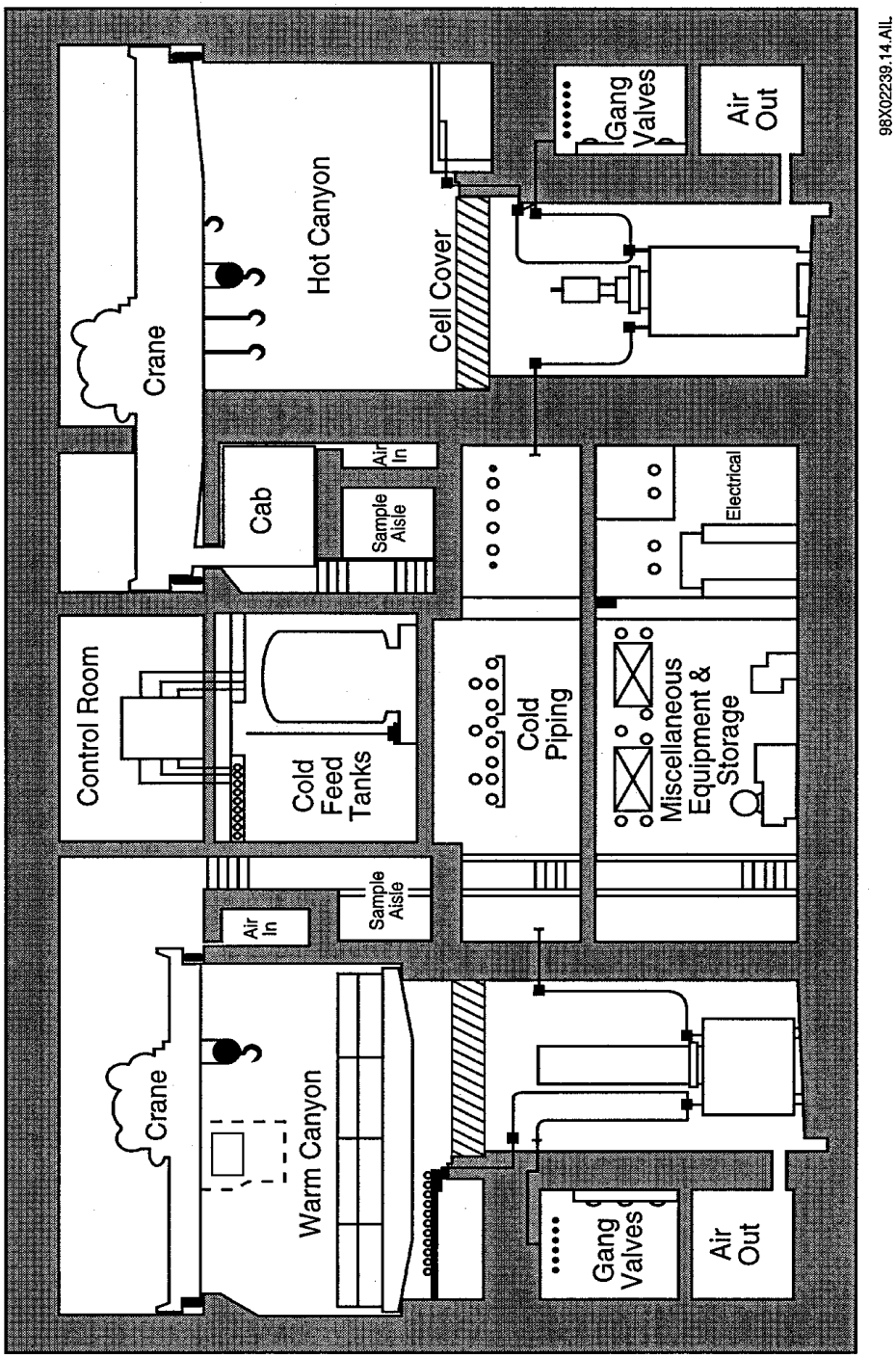

Figure 10–2 Typical Cross Section View of H–Canyon

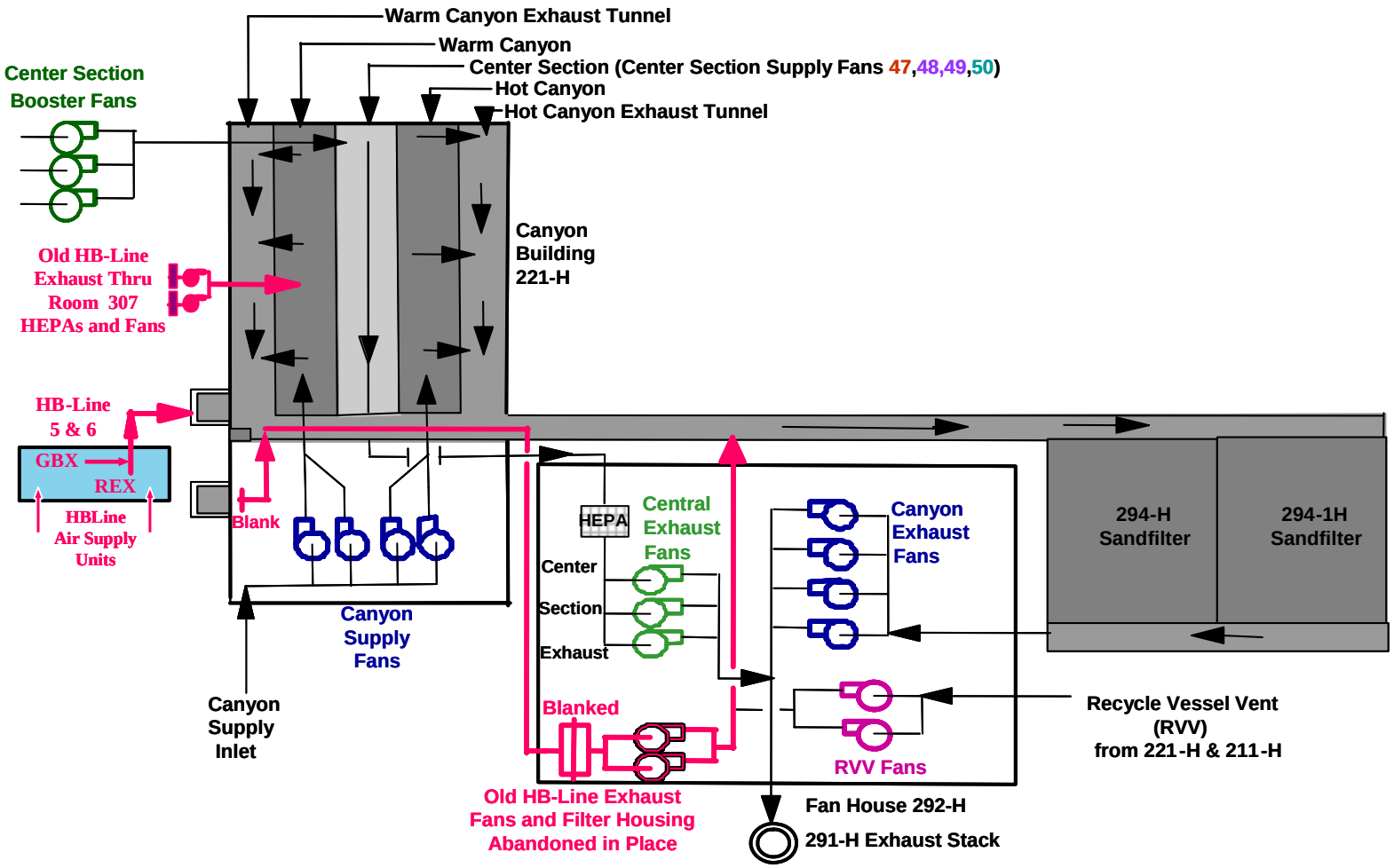

Figure 10–3 Canyon Ventilation System Diagram

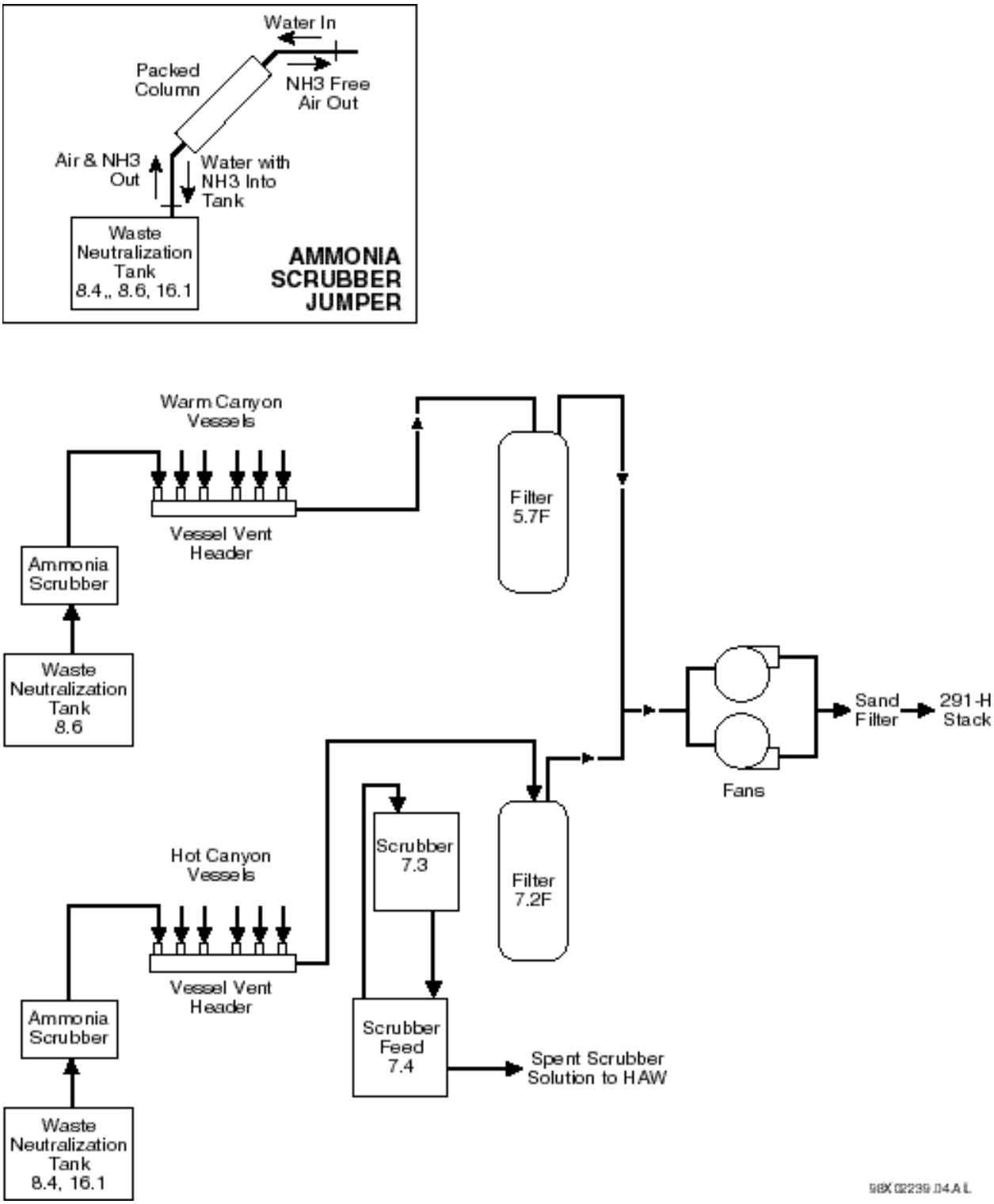

Figure 10–4 Process Vessel Vent System Diagram

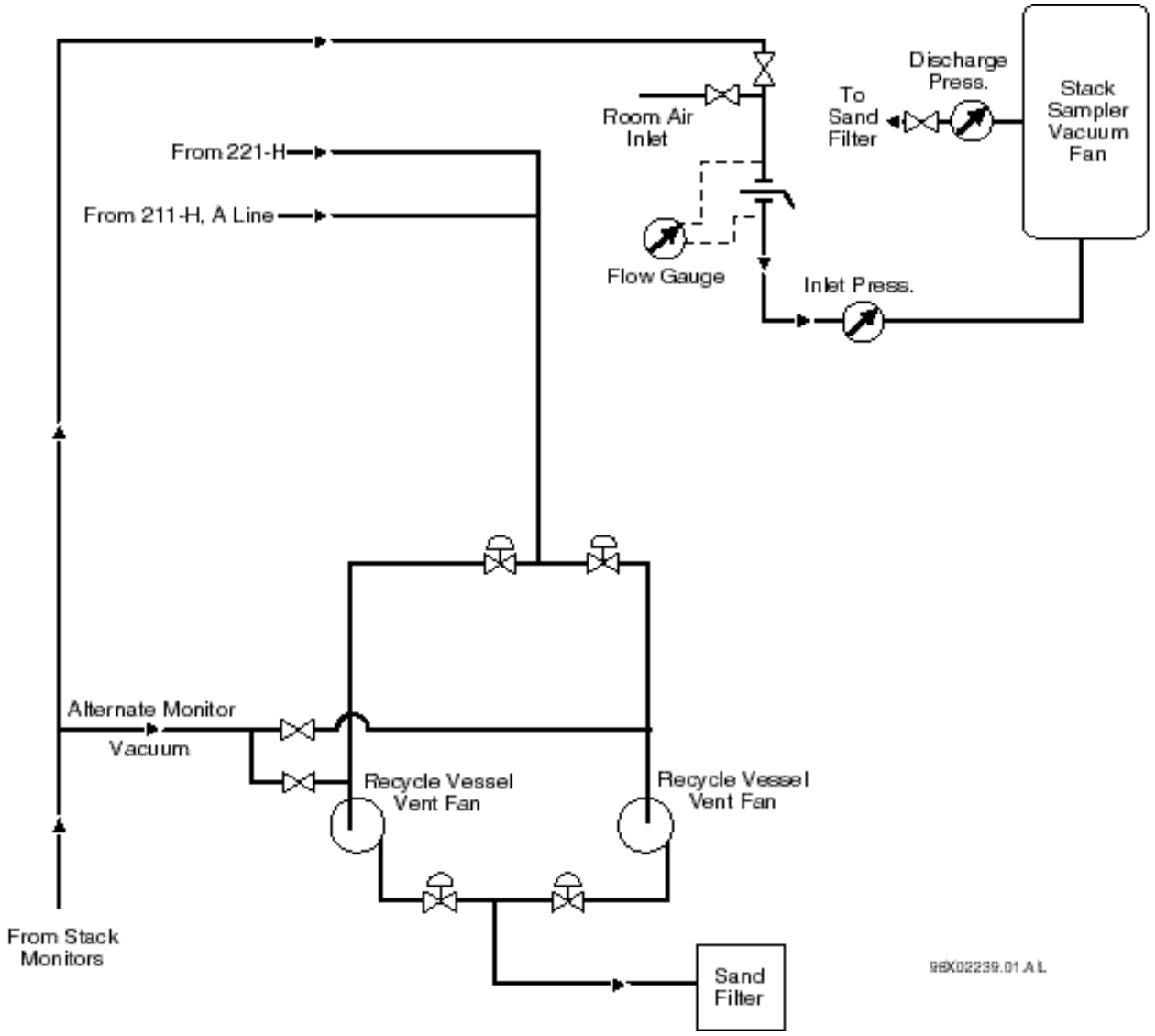

Figure 10–5 Recycle Vessel Vent System in 292–H Showing Stack Monitor Flow

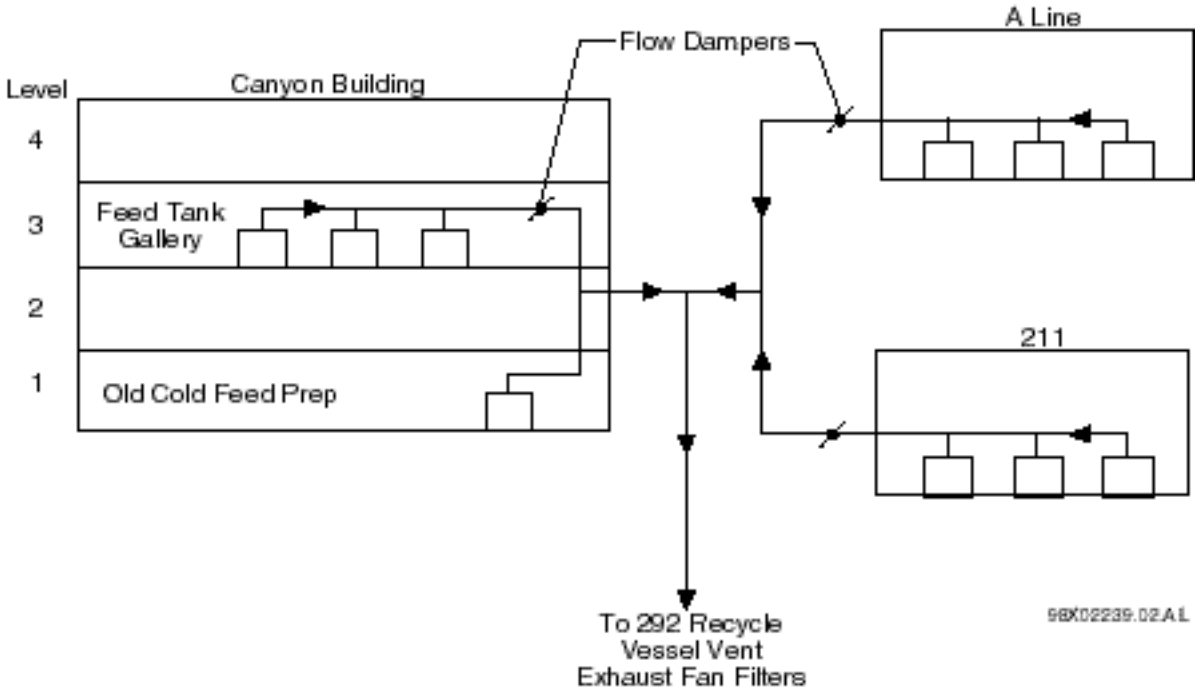

Figure 10–6 Recycle Vessel Vent System Diagram

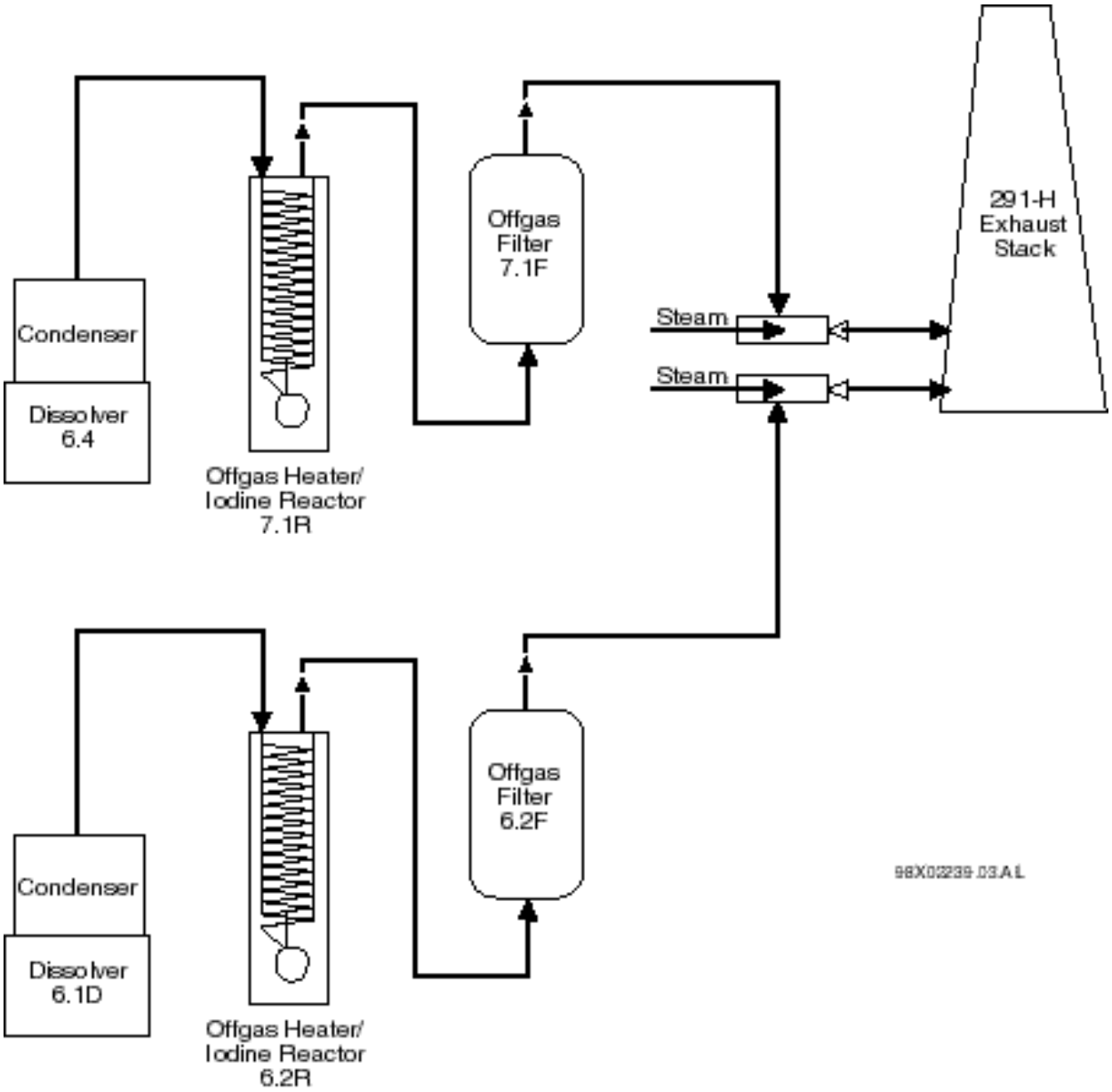

Figure 10–7 Dissolver Offgas System Diagram

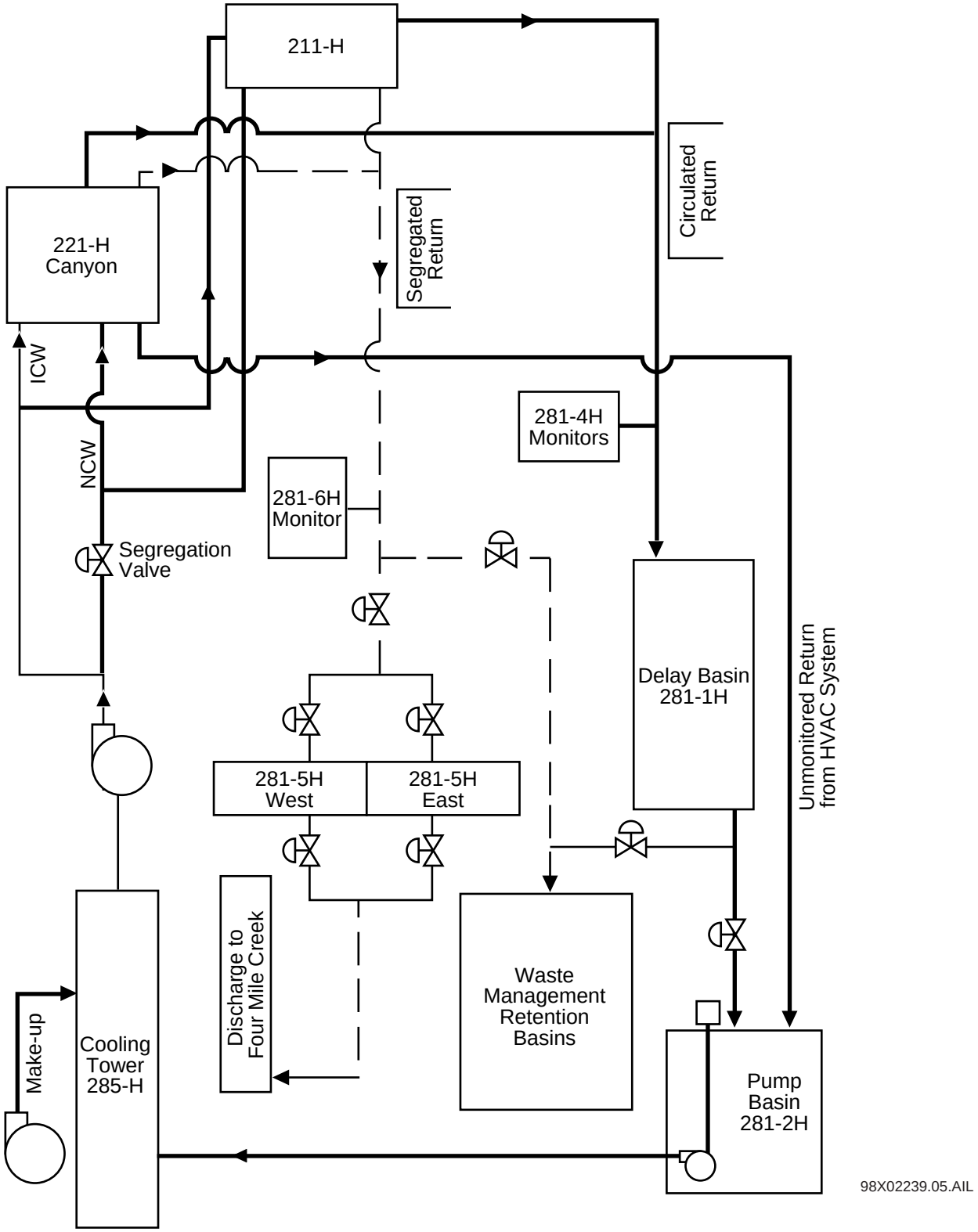

Figure 10–8 Cooling Water Systems

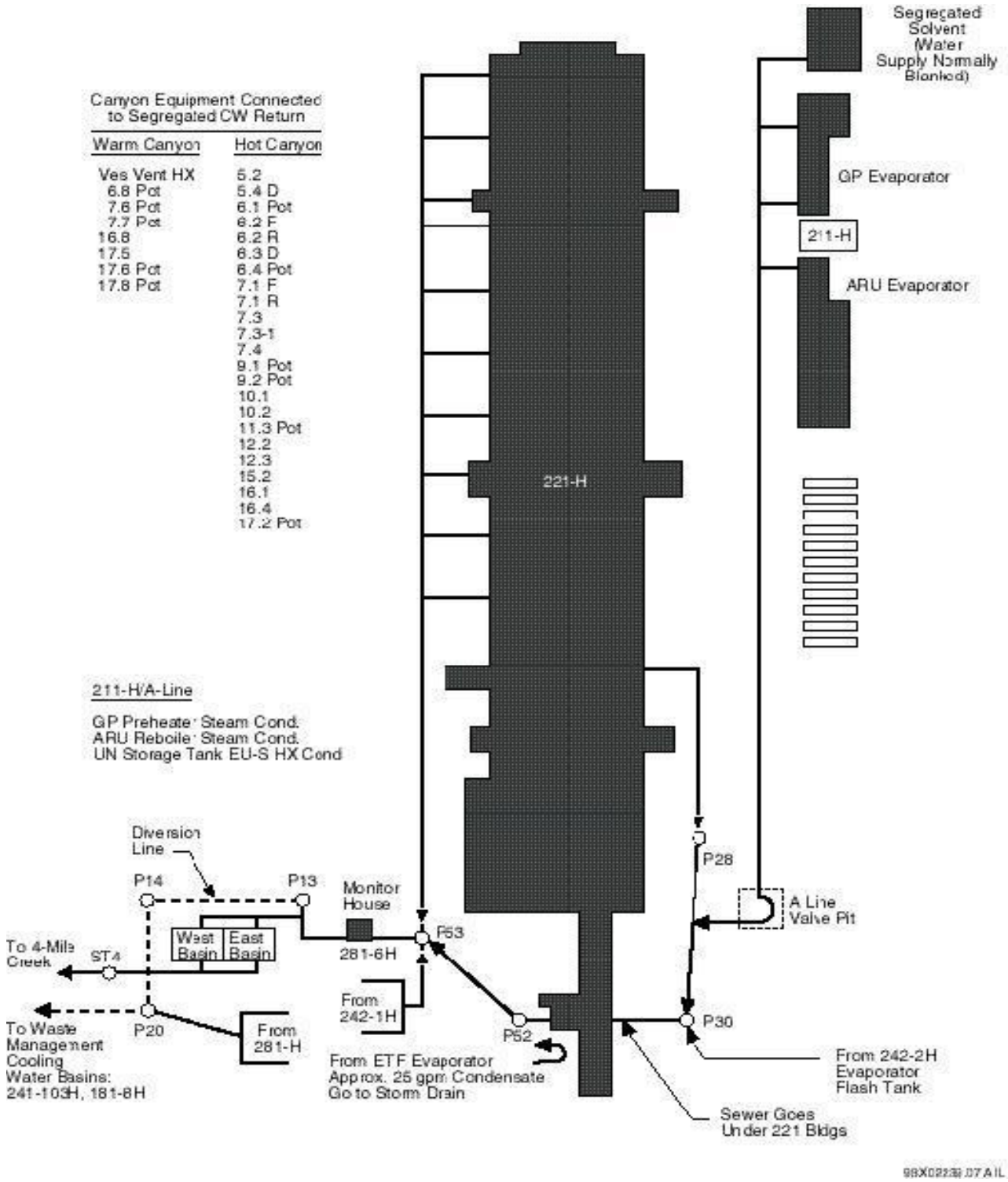

Figure 10–9 Segregated Cooling Water System

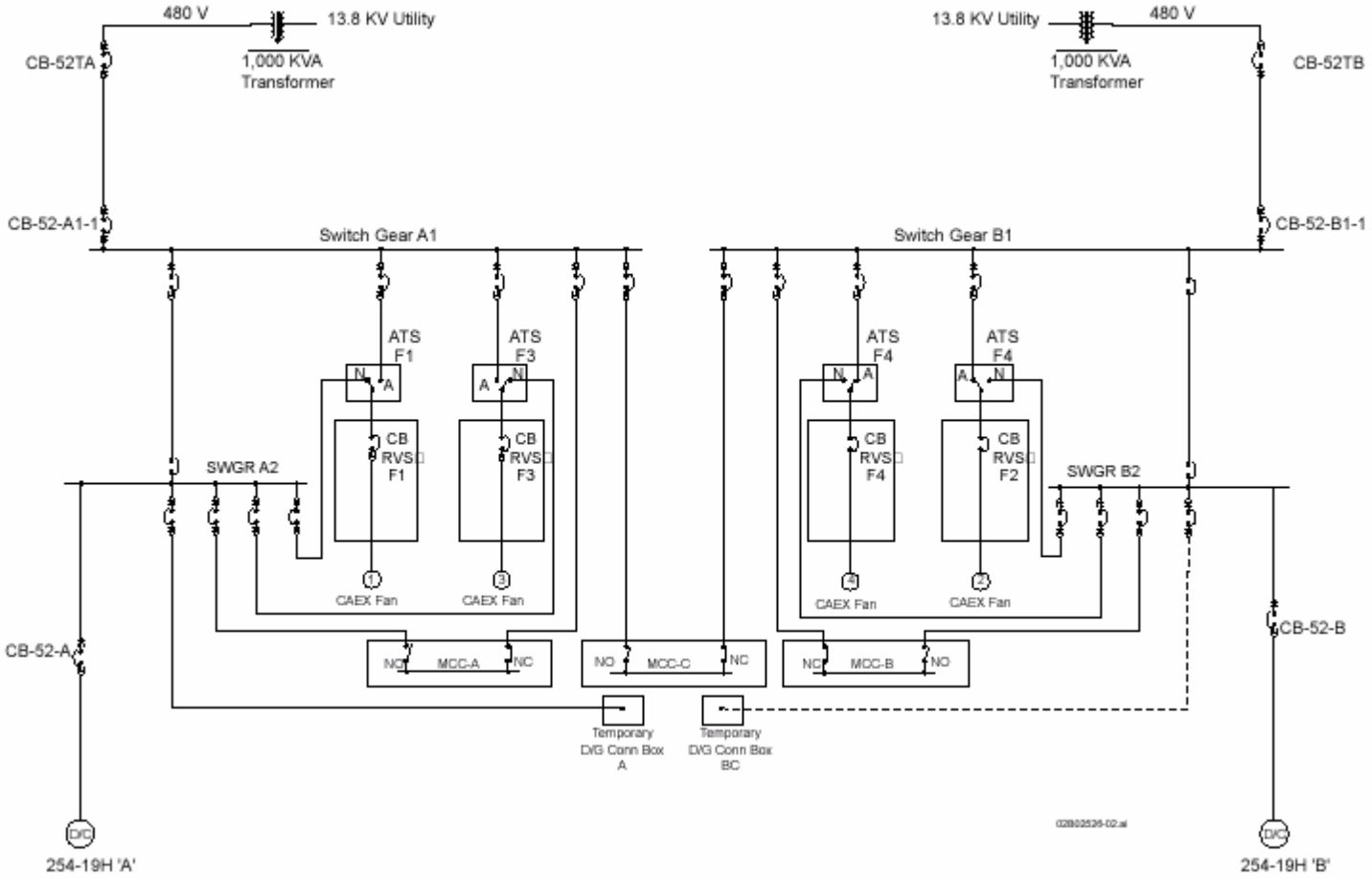

Figure 10–10 S–4404 Line Diagram (at project completion)

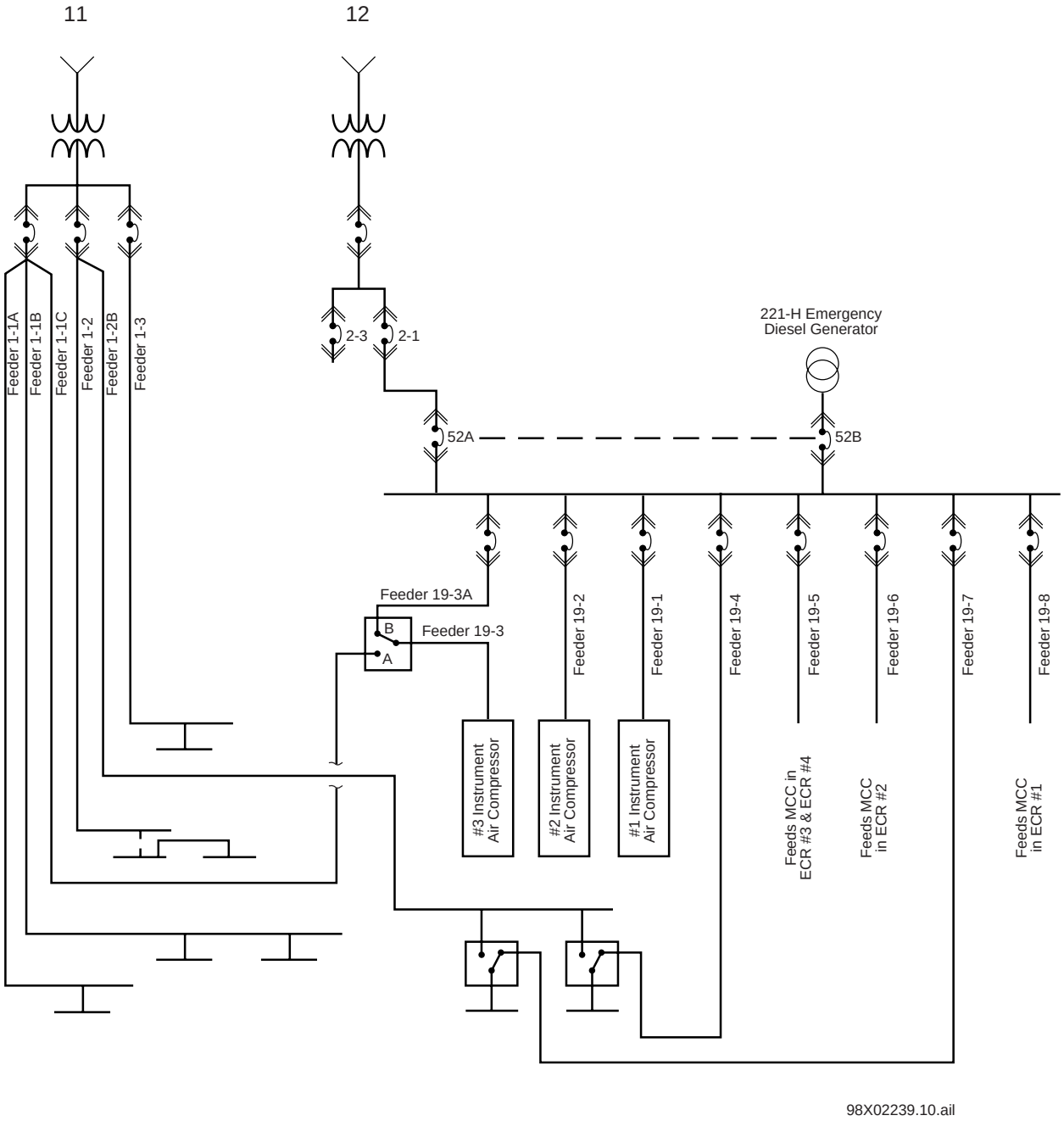

Figure 10–11 H-Canyon T1 and T2 Building Electrical System Single Line Diagram

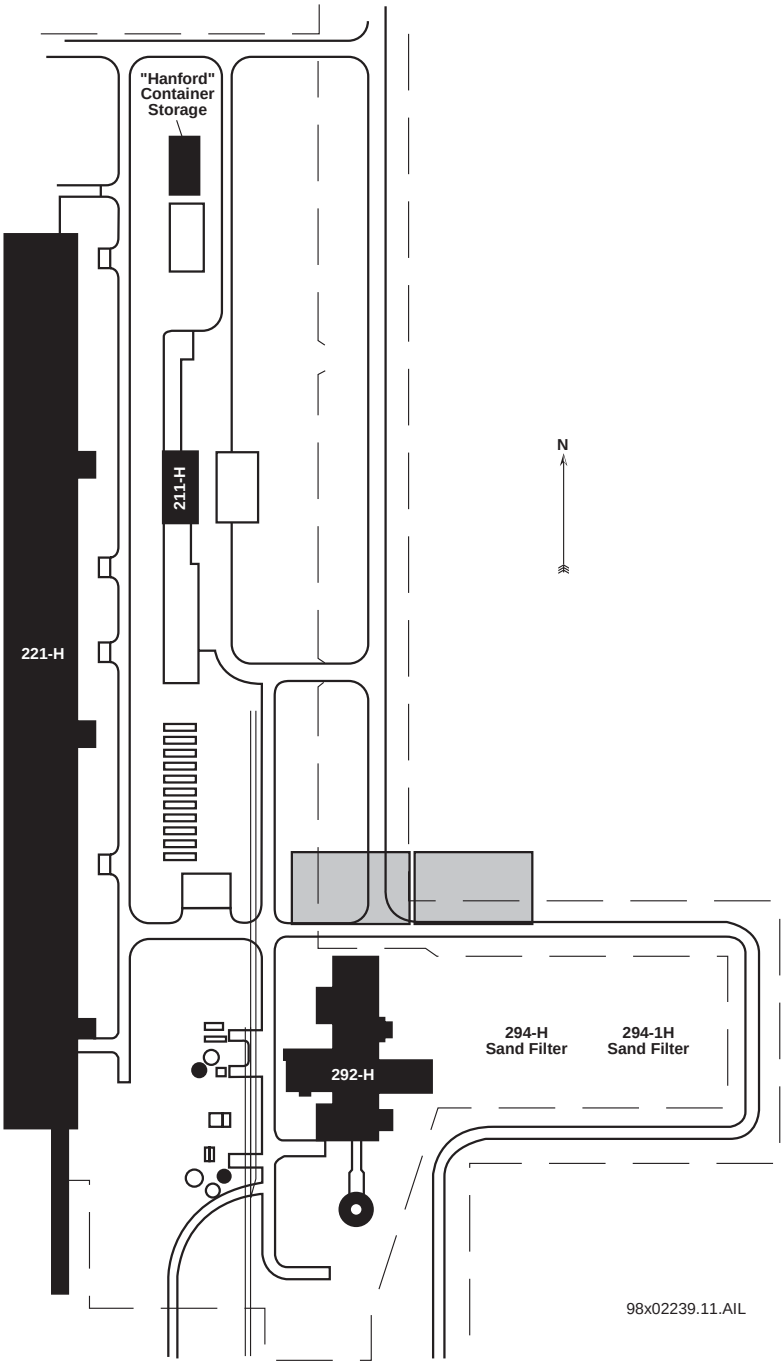

Figure 10–12 Layout of OF–H and the Location of the Hanford Container Storage Area

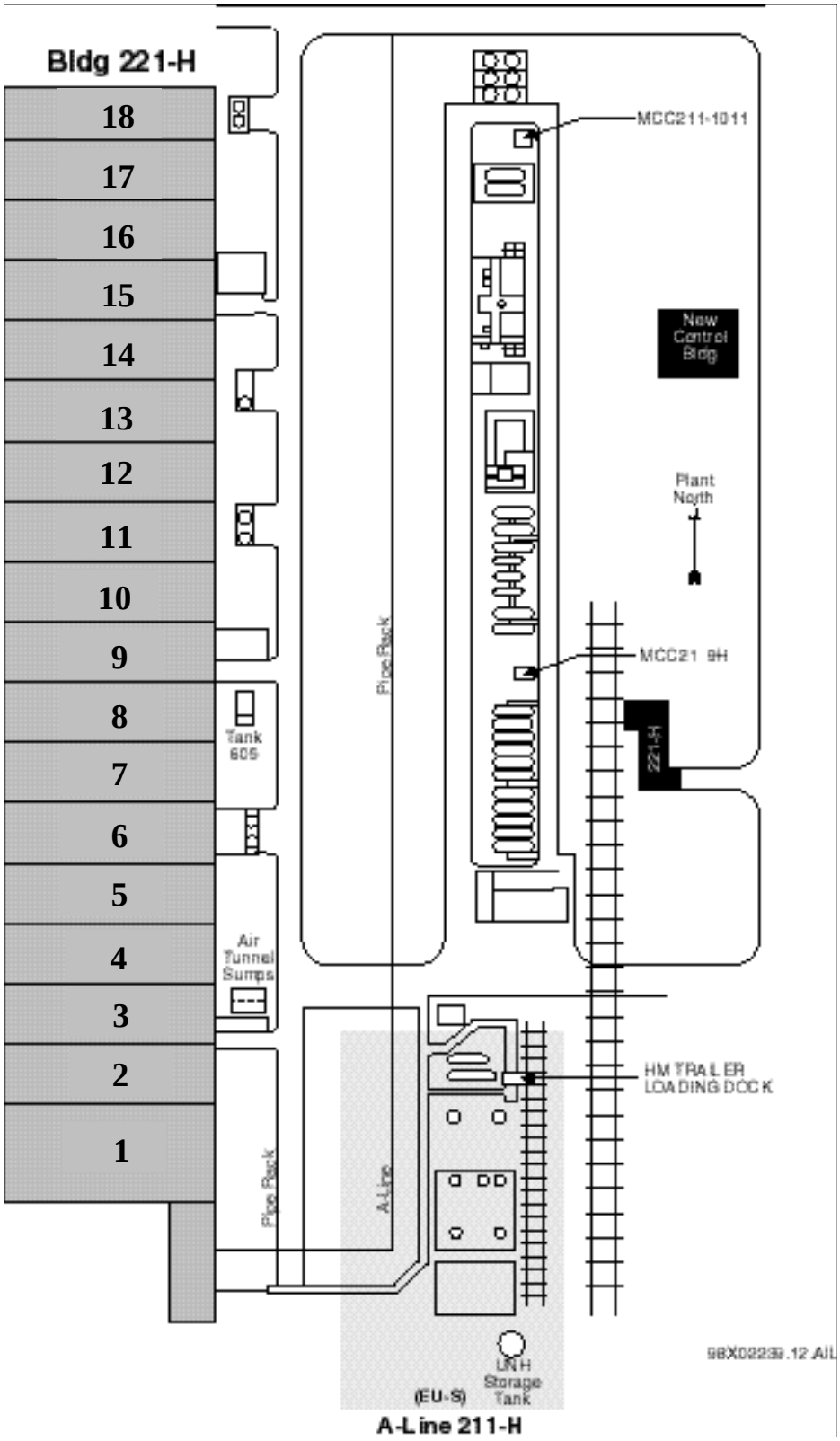

Figure 10–13 H–Area, A–Line Building 211–H Diagram

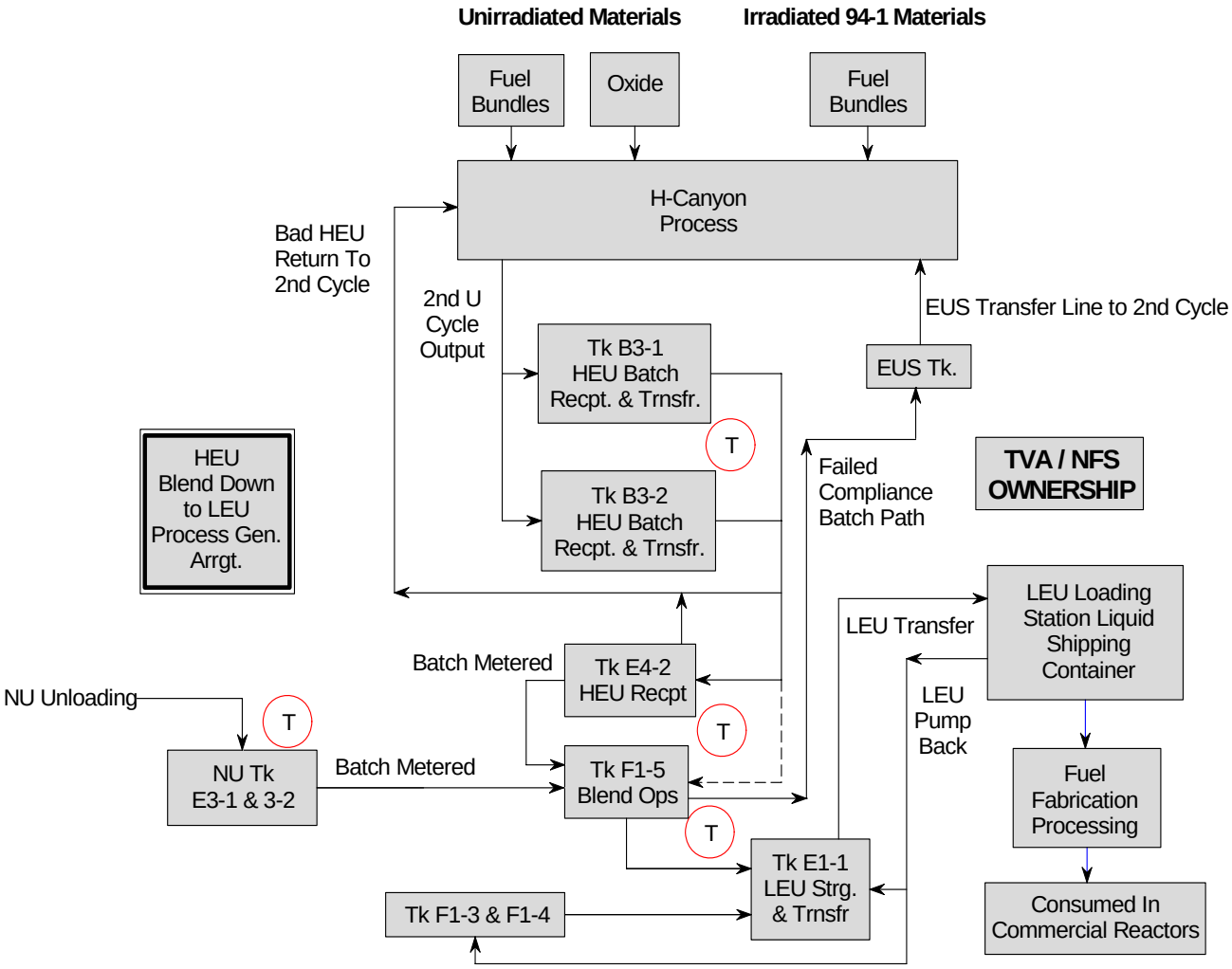

Figure 10–14 Highly Enriched Uranium Blend Down Process Functional Arrangement

H–Canyon
Safety Analysis Report (U)

Safety Analysis
H–Canyon SAR Addendum
Addendum 1, Revision 5

January 2007

H–Canyon Accident Analysis (U)

SAVANNAH RIVER SITE
Aiken, SC 29808 • www.srs.gov

PREPARED FOR THE U.S. DEPARTMENT OF ENERGY UNDER CONTRACT NO. DE-AC09-96SR18500

A.1 H–CANYON ACCIDENT ANALYSIS

A.1.1 SUMMARY

The purpose of this addendum is to evaluate the consequences of applicable Safety Analysis Report (SAR) accidents in H–Canyon from proposed stabilization activities. The stabilization activities are in response to Defense Nuclear Facilities Safety Board (DNFSB) Recommendations 94–1 and 2000–1 and include the stabilization of such materials as the Mark (Mk)–16 and Mk–22 Savannah River Site (SRS) fuels and the offsite reactor fuels. The source terms used in this addendum are based on the radioisotopes contained in the SRS Mk–22 irradiated fuel. This material was chosen for developing a source term because it provides a "bounding" or "worst case" scenario for the accident analysis. The stabilization activities associated with DNFSB Recommendations 94–1 and 2000-1, and other missions, will be evaluated using the Unreviewed Safety Question (USQ) process to ensure that this bounding assumption remains valid.

Ten accident scenarios from the H–Canyon SAR were analyzed. One of the events, a coil and tube leak slug release from Frame Waste Recovery (FWR) was determined to be Beyond Extremely Unlikely (BEU). This addendum reports consequences for all ten of the accident scenarios at maximum concentrations plus a nominal release of 600 Curies (Ci) from the FWR process. The FWR process analysis bounds any other high content Plutonium (Pu)–238 solutions in which the Pu–238 is limited to less than 5 kg total Pu–238 for all accidents except for the earthquake. The earthquake accident analysis assumes that the FWR and second product cycle are not operating. These accidents are the dominant accidents within a given frequency range that lead to significant risk of radiation exposure to the general public offsite or the onsite co–located workers. The accident results which affect the offsite public were plotted on the WSRC 11Q risk acceptance curves (see Figure A.1–1) to demonstrate that operation of the proposed activity within the facility falls beneath the accepted risk values. This figure demonstrates that operation of stabilization processing within H–Canyon poses no undue risk to the offsite individual by plotting consequence and frequency corresponding to the highest facility risk for each accident type. The highest facility risk consists of the expected frequency for the accident type multiplied by the maximum consequences. The analysis results for the co–located worker (located 100 meters from the facility) were plotted to show the risk to the co–located worker from H–Canyon accidents. Since the Department of Energy (DOE) has not published risk acceptance levels for the co–located worker similar to those for the offsite public, a DOE risk acceptance level is not shown on the co–located worker curve. The H–Canyon USQ risk acceptance curve is shown in Figures A.1–1 and A.1–2. For USQ screenings, the highest consequence event in each frequency range (anticipated, unlikely, and extremely unlikely) is plotted.

The values plotted in Figures A.1–1 and A.1–2 are the expected frequency for each accident type and the maximum consequences. In previous versions of the SAR Addendum, the "maximum" risk figures plotted the maximum consequences and a maximum frequency. Per DOE guidance,

this approach is unacceptable because using frequencies that correspond to maximum consequence (i.e., a lower frequency than the expected frequency for the accident type) can result in underestimating the total risk for a particular accident type. Additionally, the calculations of these frequencies corresponding to the maximum consequence events include some inherent assumptions that are not protected as part of the Documented Safety Analysis (DSA). It should be noted that the frequency of the slug formation coil and tube failure event is not the same as the nominal frequency. This is because the slug formation scenario is a different physical mechanism than the previously analyzed pinhole leak entrainment scenario.

Postulated accidents analyzed in the previous H–Canyon BIO addendum included fire, flammable gas/vapor deflagration, transfer error to outside facilities, a failure of the cooling coil in the circulated system that leads to an airborne release, a failure of a cooling coil in the segregated system that leads to a liquid release, criticality, ruthenium volatilization and a seismic event. This addendum analyzes two additional uncontrolled reaction events not included in the previous revision, the tributyl phosphate (TBP)/nitric acid reaction and an ammonium nitrate explosion in the filter of the Process Vessel Vent (PVV) System. This addendum consistently uses the MELCOR Accident Consequence Code System (MACCS) code for atmospheric dispersion, and applies a new maximum source term to the accidents that is based on proposed operational parameters for future stabilization campaigns. Additionally, risks due to nominal consequences are no longer calculated for any accident. Only maximum consequence risks are presented.

Five accident scenarios were previously deleted from the BIO addendum per DOE direction. These include overflow, leak, uncontrolled reaction (0.1-lb. release), external impact, and transfer error to sump. These accidents were deleted because they meet the following criteria:

1) They are classified as Class III accidents in the H–Canyon SAR;
2) They require only passive engineered features to be considered a Class III accident, (e.g., no additional controls or active engineered features are required to maintain these accidents as Class III); and
3) These accidents do not generate sufficient energy to breach the H–Canyon containment building.

One accident that meets these criteria, ruthenium volatilization, remains in the addendum because it is the worst consequence accident in the anticipated frequency range.

The following tables summarize the risks associated with operating the H–Canyon facility for various postulated events. Table A.1.1–1 contains a summation of the risks associated with all the unit operations affected by each representative accident (i.e., the risk associated with each affected unit operation is added together and reported in this table). Table A.1.1–2 contains the consequence and frequency associated with the individual unit operation with the highest consequence for each event, with the exception of earthquake, which shows the total risk. All unit operations are affected simultaneously in the earthquake event. There are two events in which the highest consequence does not equate to the maximum risk for the event. Table A.1.1–2 lists both the highest risk and highest consequence accidents for these two events, transfer error to outside and coil and tube liquid release. The maximum risk case is identified in the receptor column of the table (e.g., Maximum Exposed Offsite Individual [MOI] Risk) without any

indication for the maximum consequence case. In the case of ruthenium volatilization, only two unit operations (Dissolving and Head End) could be affected. Analysis for PVV filter explosion and the TBP/nitric acid reaction was completed at the component level.

Table A.1.1–1 Summary Table of Total Risks for H-Canyon

ACCIDENT	MAXIMUM OFFSITE INDIVIDUAL mrem/yr	OCCUPATIONALLY EXPOSED PERSON[1] mrem /yr
Earthquake	2.3E-01	1.1E+01
Fire	6.2E-02	3.7E-01
Uncontrolled Reactions		
Flammable Gas/Vapor Deflagration	6.9E-02	7.4E-02
TBP/Nitric Acid	6.4E-02	8.7E-02
Process Vessel Vent Explosion[2]	1.5E-02	1.0E-01
Criticality[2]	1.5E-03	2.9E-02
Transfer Error to 211-H	2.1E-01	2.3E+00
Ruthenium Volatilization[2]	6.2E+00	4.4E+01
Coil and Tube Leak – Airborne Release Circulated Cooling Water Cooling Tower	9.7E-02	1.5E+01
Coil and Tube Leak –Liquid Release Segregated Cooling Water System[3]	2.5E-01	N/A

Notes:

1. The onsite occupationally exposed person (OEP) is located 100m from the release point, or at the point of plume touchdown for elevated releases.
2. All accidents except criticality, PVV Filter explosion, and ruthenium volatilization were assessed with nominal source terms for on-site releases.
3. There is no liquid exposure pathway to the co-located worker.

Table A.1.1–2 Summary Table of Risks for H-Canyon

ACCIDENT	CONSEQUENCE (mrem)	FREQUENCY (/yr)	RISK (mrem/yr)	RECEPTOR[1]
Earthquake	4.6E+02	5.0E-04	2.3E-01	MOI
	2.2E+04	5.0E-04	1.1E+01	OEP
Fire (FWR)	5.6E+01	1.1E-03	6.2E-02	MOI
	3.4E+02	1.1E-03	3.7E-01	OEP
Uncontrolled Reactions				
Flammable Gas/Vapor Deflagration (FWR)	9.3E+02	5.3E-05	4.9E-02	MOI
	7.0E+02	5.3E-05	3.7E-02	OEP
TBP/Nitric Acid (Low Activity Waste [LAW])	2.2E+02	1.0E-04	2.2E-02	MOI
	3.1E+02	1.0E-04	3.1E-02	OEP
Process Vessel Vent Explosion[2]	1.5E+03	1.0E-05	1.5E-02	MOI
	1.0E+04	1.0E-05	1.0E-01	OEP
Criticality[2]	3.9E-01	1.6E-03	6.2E-04	MOI
	6.4E+00	1.6E-03	1.0E-02	OEP
Transfer Error to Outside	9.1E+02	9.6E-05	8.7E-02	MOI (Risk)
	1.0E+03	9.1E-06	9.1E-03	MOI
	7.8E+03	9.6E-05	7.5E-01	OEP (Risk)
	3.9E+04	9.1E-06	3.5E-01	OEP
Ruthenium Volatilization[2]	3.5E+01	8.8E-02	3.1E+00	MOI
	2.5E+02	8.8E-02	2.2E+01	OEP
Coil and Tube Leak Airborne Release Circulated Cooling Water Cooling Tower	3.3E+02	7.2E-05	2.4E-02	MOI
	5.1E+04	7.2E-05	3.7E+00	OEP
Coil and Tube Leak –Liquid Release Segregated Cooling Water System[3]	1.1E+03	1.6E-04	1.8E-01	MOI
	N/A	N/A	N/A	OEP

Notes:

1. The onsite exposed person is located 100m from the release point, or at the point of plume touchdown for elevated releases.
2. All accidents except criticality, PVV Filter explosion, and ruthenium volatilization were assessed with nominal source terms for on-site releases.
3. There is no liquid exposure pathway to the co-located worker.

A.1.2 FACILITY DESCRIPTION AND ACCIDENT INITIATORS

A.1.2.1 PROCESS UNIT OPERATIONS AND EQUIPMENT DESIGNATION

Equipment used in the H-Canyon process is discussed in this SAR, the old H–Canyon SAR (Ref. 1), and the System Course Descriptions (Ref. 2). The Unit Operations evaluated are defined to include the vessels listed in Table A.1.2–1. Vessels listed more than once are used by more than one operation.

Table A.1.2–1 H-Canyon Unit Operations

Vessel I.D.s	Unit Operation	Canyon Module
6.1D, 6.4D, 7.4, 8.3	Product – Dissolving	Hot Canyon, Sections 6, 7, 8
10.2, 10.3C, 10.4, 11.2, 11.3E, 11.4	Product - Head End	Hot Canyon, Sections 10, 11
12.2, 12.3, 12.4, 13.1M, 13.4M, 13.3, 14.2, 14.3M, 15.1, 18.4	Product Solvent Extraction-1st Cycle	Hot Canyon, Sections 12, 13, 14, 15, 18
8.5, 8.8, 9.5, 9.6, 12.5, 12.7, 11.5M, 10.6M, 10.8,14.7,17.7, 17.8E, 18.5	Product Solvent Extraction-2nd Product Cycle (not considered in the earthquake analysis)	Warm Canyon, Sections 8, 9, 10, 11, 12, 14, 17, 18
18.7, 17.5, 16.8, 17.7, 17.6E, 16.7, 15.7, 15.5M, 15.8M, 14.5, 17.4, 18.1	Product Solvent Extraction-2nd U Cycle	Warm Canyon, Sections 14, 15, 16, 17, 18
13.7, 13.8, 14.6, 13.5, 12.6, 12.8, 14.8	Recycle Solvent Recovery	Warm Canyon, Sections 12, 13, 14
8.1, 8.2, 8.4, 9.1E, 9.2E, 9.3, 9.4	High Activity Waste	Hot Canyon, Sections 8, 9
6.8E, 7.6E, 7.7E, 7.5, 8.6, 8.7, 9.7, 9.8, 10.5, 11.7, 11.8	Low Activity Waste	Warm Canyon, Sections 6, 7, 8, 9, 10, 11
10.1, 15.2, 15.3, 16.1, 16.2, 16.6, 17.1, 18.2	Rerun Canyon Sump Receipt Product Recovery Waste Evaporator and Disposal	Hot Canyon Sections 15, 16, 17, 18 Warm Canyon Section 16 A–Line HEU
15.4, 17.2E	Uranium Concentration	
RC-16 (16.3-1), 5.2, 5.4, 7.3-1, 16.1, 16.2, 16.1-2, 16.3, 16.4	Frame Waste Recovery (not considered in the earthquake analysis)	Hot Canyon Sections 5, 7, 16
8.5, 9.6, 11.1 12.1, 16.3, 16.4, 18.3	U/Np/Pu Storage	Hot Canyon, Sections 11, 12, 16, 18 Warm Canyon, Sections 8, 9

A.1.2.2 ACCIDENT INITIATORS

Operation of the H-Canyon process is discussed in this SAR. The accidents evaluated that result in a radioactive release and for which consequences are reported in this addendum include:

- Earthquake
- Uncontrolled Reaction (TBP/Nitric Acid Reaction)
- Uncontrolled Reaction (Ammonium Nitrate Explosion in the PVV Filter)
- Criticality
- Fire
- Uncontrolled Reaction (Flammable Gas/Vapor Deflagration)
- Transfer Error to Outside Facilities
- Ruthenium Volatilization
- Coil and tube leak – Airborne release from the Circulated Cooling Water (CCW) Cooling Tower
- Coil and tube leak – Liquid release to the offsite surface water from a liquid release from the Segregated Cooling Water (SCW) System

A.1.3 ANALYSIS METHODOLOGY

A.1.3.1 MAXIMUM PROCESSING RADIONUCLIDE CONCENTRATIONS

This addendum evaluates the consequences of applicable H-Canyon SAR accidents using estimated maximum source terms. The maximum source terms for Dissolving, Head End, 1st Cycle, 2nd Uranium Cycle, 2nd Neptunium Cycle, High Activity Waste (HAW), LAW, Neptunium (Np) and Pu Storage, and FWR are based on information provided by Separations Engineering (Ref. 3). The isotopic maximum concentration was determined for the radionuclides present in each process. The isotopic curie contents include the in growth of Americium (Am)-241 for a 29 year (two half–lives) period. The accident analysis uses four worst-case radionuclide concentrations based on the following process groups:

- Dissolving, Head End, 1st Cycle, and HAW, use Dissolving radionuclide concentration.
- 2nd Neptunium Cycle, 2nd Uranium Cycle, LAW, and processing stored Np–237 and Pu–239, use processing stored Np–237 radionuclide concentration.
- Storage of Np–237 and Pu–239 use stored Np–237 radionuclide concentration.

- FWR, use Pu-238 radionuclide concentration.

Table A.1.3–1 shows the maximum curie content by isotope for the process used in the consequence analysis.

The source terms used in this addendum are based on the SRS Mk–22 reactor fuel that has received 1,100-megawatt days of burn up in the SRS reactors. The fuel has cooled for a minimum of 3,000 days so most of the fission products have decayed to negligible values. Fission products, which have decayed to values less than 1.0E-10 Curies/pound of solution, are not included in the source term. The Mk–22 fuel used in the consequence analysis will bound the Mk–16 (e.g., P9.5) fuel and the offsite reactor fuels to be processed in H–Canyon.

Additional radionuclide concentrations for solvent and resin column loading in FWR were provided in Reference 3 to be used for the fire analysis. Based on this information, two worst-case solvent radionuclide concentrations and one worst-case resin isotopic distribution were determined. Table A.1.2–2 shows these isotopic distributions.

Consequences for the maximum source terms are calculated using the maximum concentrations, along with the overflow volume of the largest tank in the Unit Operation. Consequence calculations for releases were performed using the LADTAP XL and MACCS computer programs. LADTAP XL is described in Reference 4. MACCS is described in References 5-8. Consequences are calculated for a maximally exposed offsite individual and the facility worker located 100 meters from the point of release or the plume touchdown point. Estimated accident frequencies are discussed in Section A.1.3. Risk values were calculated as the product of expected accident frequencies and consequences calculated using the maximum source terms.

A.1.3.2 IMPACTS OF NEW EVALUATION

The MACCS code was used to calculate most doses reported in revision 1 to this addendum. The original analysis using the MACCS code used the plutonium oxide form of the plutonium compounds instead of the plutonium nitrate form. The plutonium nitrate compounds have a greater dose per gram of material ingested or inhaled because of the increased solubility of the nitrate form over that of the oxide form. The plutonium nitrate form of a compound has about a 50% greater dose to a receptor than does the plutonium oxide form. The consequence analysis results reported in this addendum use the more conservative plutonium nitrate compound to determine the accident consequences.

MACCS uses databases for population and meteorology, which have been updated from those used for the original SAR calculations. The offsite population database used in the addendum uses the 1990 U. S. Census data. The onsite population database is based on a typical August 1992 onsite population. The meteorological database is based on 5 one-year periods from 1987-1991. The effect of these changes in input data is not significant.

MACCS version 1.5.11.1 was used to compute Total Effective Dose Equivalent (TEDE) values for airborne emissions of radioactive material. MACCS was developed at Sandia National Laboratory under sponsorship of the U.S. Nuclear Regulatory Commission (NRC) and DOE.

The MACCS code uses the same Gaussian plume methodology and SRS meteorological data as used by the SRS AXAIR model that has been previously used in OF–H accident consequence calculations. MACCS has several advantages over the AXAIR code, including the ability to analyze a wider range of accident conditions, more realistic treatment of site–specific parameters, a larger library of isotopes, and improved computer processing performance. MACCS is the NRC standard assessment methodology and is used throughout the world to make radiological assessments. AXAIR calculates doses to an offsite MOI such that the dose reported is in the 99.5% quantile in the worst sector of exposure. MACCS calculates exposure to the MOI independent of sector, but at the 95% dose level. The sector independent 95% dose quantile doses compare favorably to 99.5% dose quantile doses in the worst sector. In general, MACCS provides more realistic estimates of dose from airborne releases, and will produce a lesser dose under similar conditions compared to the previously used AXAIR code.

MACCS also uses updated dose conversion factors (International Commission on Radiological Protection (ICRP) 30 vs. ICRP 2 used in the original SAR). Additionally, accidents were evaluated using more conservative assumptions for release fractions. Finally, use of the maximum source terms results in larger doses and greater risks than those from accidents previously analyzed with nominal source terms. While doses and risks from maximum source terms result in larger reported values from the previously reported nominal source term results, as can be seen from Figures A.1–1 and A.1–2, these are all within guidance established by Westinghouse Savannah River Company (WSRC) and DOE for safe operation of the facility.

An additional receptor, the onsite worker at 100m was added to the consequence calculations. Previously, H-Canyon SB documents used an onsite receptor co–located at a distance of 640m from the release point as the basis for evaluating doses to onsite workers. This document, upon the recommendation of the AB Steering Committee, changes that receptor distance to 100m from the release point, or in the case of a stack release, the plume touchdown point if it results in a larger dose. For H–Canyon, both elevated stack releases and ground level unfiltered releases are evaluated. The only H–Canyon accidents that have a ground level release are an earthquake, a transfer error to Outside Facilities (OF-H), and an airborne release from the cooling tower from a tube and coil leak. For these three accidents, the 100–meter distance from the release point is used in the consequence calculations. This methodology change will result in elevated doses to the onsite worker when compared to similar events that previously were evaluated at a distance of 640m from the release point.

Table A.1.3-1 Maximum Radionuclide Concentrations for H-Canyon Process Stages for Postulated Accidents Not Involving Fire

	Dissolver, Head End, 1st Cycle, & HAW	2nd Np Cycle, 2nd Pu Cycle, 2nd U Cycle, LAW, and processing stored Np–237 & Pu–239	Storage Np–237 and Pu-239	FWR
Concentration(Ci/lb)	5.70E+00	1.75E+00	2.06E+01	5.73E+01
Isotope	Maximum Curie Content	Maximum Curie Content	Maximum Curie Content	Maximum Curie Content
Sr-90	9.31E-01			
Y-90	9.32E-01			
Ru-106	6.14E-03			
Rh-106	6.14E-03			
Ag-110	7.35E-06			
Sn-123	8.19E-10			
Sb-125	1.22E-02			
Cs-134	1.15E-01			
Cs-137	2.82E+00			
Ce-144	1.27E-02			
Pr-144	1.27E-02			
Pm-147	5.14E-01			
Eu-155	1.89E-02			
U-234	2.01E-04	5.68E-05		
U-235	1.74E-06	8.29E-07		
U-236	5.55E-05	1.26E-05		
U-238	1.49E-07	3.68E-08		
Np-237	3.77E-05	4.92E-02		
Pa-233	0.00E+00	4.92E-02		
Pu-238	1.63E-01	1.63E+00	1.33E+00	5.64E+01
Pu-239	7.84E-04	1.15E-03	3.76E-03	3.79E-02
Pu-240	7.82E-04	7.23E-04	2.16E-01	2.01E-02
Pu-241	1.44E-01	1.63E-02	1.83E+01	8.38E-01
Pu-242	2.54E-06	7.40E-07	1.37E-02	2.69E-05
Am-241	5.88E-03	6.69E-04	7.49E-01	3.44E-02
Total	**5.70E+00**	**1.75E+00**	**2.06E+01**	**5.73E+01**

Table A.1.3-2 Maximum Radionuclide Concentration Used for Fire Accident Analysis for H-Canyon Solvent and Resin Column Loading

	1st Cycle	2nd Np Cycle,	Pu-238
	Solvent	2nd U Cycle Solvent	Resin
	9.56E-04 (Ci/lb)	2.99E-03 (Ci/lb)	1.29E+04 Ci
Isotope	Maximum Curie Content	Maximum Curie Content	Maximum Curie Content
Sr-90	9.95E-05		
Y-90	9.95E-05		
Ru-106	6.55E-07		
Rh-106	6.55E-07		
Ag-110	7.48E-10		
Sb-125	1.30E-06		
Cs-134	1.23E-05		
Cs-137	3.00E-04		
Ce-144	1.35E-06		
Pr-144	1.35E-06		
Pm-147	5.47E-05		
Eu-155	2.01E-06		
U-234	2.14E-04	2.66E-06	
U-235	1.89E-06	2.30E-08	
U-236	5.91E-05	7.34E-07	
U-238	1.59E-07	1.98E-09	
Np-237	3.98E-05	2.99E-03	
Pu-238	3.51E-05		1.27E+04
Pu-239	1.69E-07		9.00E+00
Pu-240	1.69E-07		4.99E+00
Pu-241	3.10E-05		1.88E+02
Pu-242	5.47E-10		0.00E+00
Am-241	1.27E-06		7.72E+00
Total	**9.56E-04**	**2.99E-03**	**1.29E+04**

A.1.3.3 INPUT FOR THE MACCS, AND LADTAP XL COMPUTER PROGRAMS

The MACCS version 1.5.11.1 is described in detail in References 5 through 8. A detailed description of the LADTAP XL computer program is provided in Reference 4. The discussion in this section is limited to the input assumptions for these programs.

The LADTAP XL program calculates individual and offsite population doses via the aquatic pathways for surface water liquid releases. Specifically, LADTAP XL was used to calculate the consequences of a liquid radioactive material release to Four Mile Creek from spills of radioactive solutions. For H-Canyon, the only accident that results in a liquid release is a tube and coil failure in the segregated cooling water system. The parameters and general assumptions that were used in the LADTAP XL program are shown in Table A.1.3–3. For the dose to the MOI receptor, the LADTAP XL methodology conservatively assumes that an entire year's supply of drinking water is taken from the contaminated plume in the river. Under acute accident conditions, it is assumed in this analysis that intervention would limit any individual to drinking no more than a one month supply of river water that is taken from the contaminated plume. There is no liquid release pathway to any onsite receptors.

MACCS was used to calculate the doses associated with accident specific airborne radioactive material releases. MACCS calculates the individual and population radiation doses via inhalation and plume gamma radiation pathways. For this analysis, the MACCS program uses accident specific release times. TEDE values are calculated for the offsite doses using the sector independent 95% dose quantile. TEDE values for the onsite receptor are calculated using the sector independent 50% dose quantile. A table showing the input parameters used for these calculations is provided in Table A.1.3–4. Reference 9 contains additional detail on the assumptions and inputs for the MACCS program used in this accident analysis.

Table A.1.3–3 Parameter and General Assumptions for LADTAP XL

Parameter	Assumption (Ind.)	(Pop.)
Minimum Monthly Savannah River Flow Rate, (ft^3/sec)	3900	4900
Shore Width Factor	0.2	
Transit Time from SRS to Savannah River, (hr)	24	
Water Supply Withdrawn from Plume	1 month	1 month
Water Consumption, (liters/yr)	730	365
Fish Consumption, (kg/yr)	0	
Other Seafood Consumption, (kg/yr)	0	
Shoreline, (hr/yr)	0	
Swimming, (hr/yr)	0	
Boating, (hr/yr)	0	

Table A.1.3–4 Parameters and General Assumptions for MACCS

Parameter	Assumption
Receptor Distances	0.1 km or plume touchdown on site, 11.85 km offsite
Building Wake Dispersion Correction	Included.
Inventory Scaling Factor (Ci to Bq)	Scenario Specific
Source Term	Scenario Specific (based on unit Curie release)
Release Time	Scenario Specific (3 minutes, 30 minutes, 7.5 hours)
Wet Deposition Correction	Disabled
Dry Deposition Correction	Enabled
(Deposition Velocity)	1.0 cm/sec for unfiltered releases
	0.1 cm/sec for stack releases
Sensible Heat Correction	Disabled
Surface Roughness Correction (cm)	100 cm
Dispersion Coefficients	Pascal–Gifford
Breathing Rate (cubic meters per second)	3.33E-04
Shielding Allowance	Disabled
Evacuation/Sheltering Allowance	Disabled

A.1.4 ACCIDENT FREQUENCIES

As stated in Section A.1.2.1 of this Addendum, the release values used in this analysis are based on estimated maximum source terms. The frequencies are expected frequencies derived from the 200–Area Data Bank or from fault tree/event tree analysis.

A.1.4.1 NATURAL PHENOMENA

The only natural phenomenon discussed in the SAR that results in a radiological release is the Design Basis Earthquake (DBE), a PC–3 earthquake. For the SRS area, these earthquakes occur at a frequency of 5.0E-04/year. The release sequence for an earthquake is the loss of radioactive material to the secondary confinement, with subsequent escape through cracks in the building, resulting in airborne releases at ground level.

A.1.4.2 FIRE

The occurrence of a fire requires three constituents: fuel, oxygen, and heat. If any constituent is not present in the proper proportions, then a fire will not occur. If one constituent is sufficiently altered, then the fire goes out. If a fire were to occur in solvent extraction, it would probably occur outside the mixer settlers or centrifugal contractors in the canyon sump. If the solvent is heated to the flash point, a fire can occur if an ignition source is available. Examples of ignition sources are adjacent fires, electrical shorts, friction, and static electricity. The expected frequency of this event is 6.1E-04/yr for each solvent extraction cycle and is based on the event tree in the old SAR (Ref. 1).

The initiating frequency for a mean process fire in the FWR system was based on leakage of resin from the columns with the addition of the high temperature and high level alarms as Safety Significant (SS) equipment. This analysis, performed in Calc. Note S-CLC-H-00463 (Ref. 10), gives a frequency of 1.1E-03/yr.

A.1.4.3 UNCONTROLLED REACTIONS

In the canyons, uncontrolled reactions are the most rapid means of losing control of large volumes of highly contaminated material. The most common uncontrolled reactions include eructations, foaming, boil over, or gassing. The primary causes of uncontrolled reactions are chemical addition errors, procedural errors, and equipment failure. Based on information from the 200–Area Data Bank, these reactions are estimated to occur in canyon operations at frequencies that range from 7.9E-01/yr to 4.4E-04/yr.

Uncontrolled reactions also include deflagrations and explosions. A flammable gas/vapor deflagration is considered the maximum uncontrolled reaction for this addendum. A deflagration releases more energy than the uncontrolled reaction referred to in the old SAR, but is much less frequent. This event assumes hydrogen generation from the radiolysis of the water, loss of the PVV System, and the presence of an ignition source. The estimated frequency of a hydrogen

deflagration is based on fault tree analysis and is estimated to be 5.3E-05/yr for all unit operations (Ref. 11). The fault tree assumes that the LFL is reached in 4 hours. The contribution from ammonia or organic, as applicable, are included in this assumption.

The frequency of an uncontrolled reaction involving less than 3,000 pounds of tributyl phosphate (TBP) and nitric acid is given in the H–Canyon PHA as extremely unlikely. Previously reported frequencies range from 5.0E-04/yr to 8.0E-05/yr for the unheated process tanks. Reference 12 determines the frequency of a less than 3,000 TBP red oil reaction in the evaporators was 1.0E-04/yr. This frequency will be used as the red oil frequency for the LAW and HAW evaporators.

The frequency of the PVV filter explosion is given in the H–Canyon PHA as extremely unlikely. Based on this estimate an arbitrary value of 1.0E-05/yr has been assigned.

A.1.4.4 CRITICALITY

A criticality accident is defined as the release of energy (and radiation) resulting from an inadvertent self-sustaining or divergent nuclear chain reaction. A nuclear chain reaction requires fissile material such as Uranium (U)-235 or Pu-239. In H-Canyon, criticality is prevented through a combination of design and administrative controls that limit or prevent concentration of fissile material. Criticality in H-Canyon Unit Operations was calculated by fault tree analysis, resulting in expected frequencies that range from 1.6E-03/yr to 1.9E-06/yr as reported in Reference 1. A criticality frequency of 1.6E-03/year was used to determine the maximum risk from this event.

A.1.4.5 TRANSFER ERROR TO OUTSIDE FACILITIES

Transfer errors are defined as the intentional movement of a material to an unintended location, premature movement, or excessive movement where the potential for chemical reaction is unlikely. Most transfer errors are the result of personnel errors associated with valve manipulation, piping errors, and premature or excessive transfer. A transfer error to the outside can occur when canyon transfer piping is incorrectly connected to a pipe route that leads to process equipment in the outside facilities. In this scenario, the contents of the largest volume tank in the unit operation, at the maximum concentration, are inadvertently transferred to one of the vessels in 211-H. The transferred material is assumed to overflow the vessel and be contained within the 211-H basin for all unit operations except FWR. FWR has both mass and concentration limits on all tanks. Therefore, for FWR, the smallest tank, at the maximum concentration, is used for the analysis. For FWR, the transferred material is contained within the basin tank and flushed with water. Prevention is based on adherence to operating procedures that require verification of the piping configuration and monitoring the transfer to ensure that material is transferred to the correct location. The frequencies for transfer error that result in a contaminated spill to 211-H range from 1.9E-05/yr. to 9.1E-06/yr (Ref. 13). A transfer error to outside frequency of 9.1E-06/year was used to determine the maximum risk from this event because of the source term associated with the FWR process.

A.1.4.6 RUTHENIUM VOLATILIZATION

Volatile ruthenium is released primarily from solutions or dissolving processes where there is a strongly oxidizing atmosphere and/or high temperatures. Prevention is based on adherence to the operating conditions specified in procedures. The frequency for a maximum release of ruthenium is estimated to be 8.8E-02/yr (Ref. 1).

A.1.4.7 COIL AND TUBE FAILURE

Coil and tube failures that result in maximum source term liquid radioactive releases to the Segregated Cooling Water (SCW) System, with the subsequent failure to divert, have frequencies that range from 1.2E-04/yr to 7.7E-06/year (Ref. 14). A cooling coil leak frequency of 1.6E-04/yr was used to determine the maximum risk from this event.

Reference 15 has determined that for FWR the frequency of an airborne release through the Circulated Cooling Water (CCW) System Cooling Tower of a slug of radioactive liquid is a BEU event with a frequency of 1.4E-07/year. If the same controls are applied to any process vessel that contains any other high content Pu–238 solution, the event will also be incredible. The coil and tube leak frequencies for all other processes are not affected by Reference 15 and remain at 7.2E-05/year (Ref. 1). A much smaller slug of material of approximately 600 Curies is a credible event for FWR and LAP with an expected frequency of 7.2E-05/year.

Reference 16 provides the basis for determining that a double ended guillotine break of the cooling coil will not occur. This will prevent a larger release than a single cooling coil volume to the cooling water systems.

A scenario has been analyzed that postulates an inadvertent transfer of process solution to either the SCW or CCW Systems. This event is a piping error where a flexible jumper is connected to an open, unused cooling water return nozzle on the canyon wall. This event could result in transferring a large volume of process solution outside the canyon to the environment. Rigid jumper use will not allow connection to the wrong nozzle because rigid jumpers are designed and manufactured to go from a specific tank connection to a specific wall nozzle. Therefore, the scenario concerns only flexible jumpers.

At least one event has occurred in F-Canyon in which a tank transfer line was connected to a cooling water return nozzle. Radioactive process solution was not released to the environment because the cooling water return line was blanked off outside the canyon wall. For the CCW System, the analysis indicates that for the as found condition, the expected frequency for an event in which radioactive material is actually released to the environment is 4.3E-05/year (Ref. 17). The analysis identified additional administrative and physical controls which when implemented reduces the frequency to less than 1.0E-06/year or to a BEU event. These controls are summarized in the SAR.

For the SCW System, the potential transfer of an entire tank contents to SCW System return and subsequent release to the environment was not specifically analyzed but is considered to be a BEU event based on the analysis of the CCW System. Sufficient differences exist between the

SCW and CCW Systems to make an event involving the SCW much less likely. The SCW return nozzles inside the canyon are in the horizontal positions on the canyon walls. To access these horizontal nozzles the cell covers must be removed, which adds multiple errors that must occur and fail to be detected by independent verification before a jumper is inadvertently hooked to the wrong nozzle and than used. Also, the SCW System Delaying Basin is a batch operated delaying basin in which the SCW is held up in one half of the basin. When either half of the SCW Delaying Basin becomes full, the water is diverted to the other half. The full half is sampled to determine if any activity is present in the delaying basin water. If the sample indicates the water is within release guidelines, the water is released to the environment (Four Mile Creek). If activity above the release guideline limits is present, the water is diverted to the Waste Management Retention Basins. These factors make an event in which a release from an inadvertent transfer to the SCW System a BEU event. The 281-6H SCW Monitors and the SCW Monitor Diversion Valves are SS items to prevent or mitigate a radioactive material release from the SCW System. Note that neither half of the SCW Delaying Basin has to be completely full for the incoming SCW to be diverted to the other half or for the water in the basin to be sampled and released. The water can be diverted to the other half of the basin or released any time it is convenient to do so.

Since the inadvertent transfer of canyon process vessel contents to the cooling water systems has been determined to be an incredible event with implementation of the above controls, this event will not be analyzed further in this addendum.

A.1.4.8 WASTE HEADER FAILURE

The waste header system consists of four 10–inch diameter, stainless steel headers. These headers lie below grade level along the east side of the canyon and extend from sections 4 to 18. They are arranged in a vertical row and are anchored and embedded from end to end in a solid pour of heavily reinforced concrete to minimize the longitudinal expansion and contraction which normally result from variations of approximately 50°C in header temperature. The rigidity of this construction permits waste lines emerging from the building to be connected directly to headers without expansion loops. Discharge lines from the canyon are welded just outside of the building wall to waste header risers that emerge from the top of the encasement. These 3–inch lines are enclosed in 6–inch diameter stainless steel jackets which extend from the wall to the encasement and drain off any leakage to a 3–inch diameter collection header embedded in the 10–inch headers. Since the discharge lines emerge from the building at the pipe rack level above grade, they are shielded. Heavy removable concrete covers known as “mummy cases” serve this purpose; they are set on the top of the encasement and against the building wall to effectively enclose the hot waste lines.

The only events identified that could impact the waste headers are an earthquake and tornado. A Natural Phenomena Hazards Qualification has shown that the Waste Headers will not fail when subject to earthquake and tornado loads (Ref. 18, 22).

A.1.5 ACCIDENT CONSEQUENCES

Ten accident scenarios were analyzed in this SAR Addendum, based on selection from the dominant accident results in the SAR. The accidents analyzed are earthquake, transfer error to Outside Facilities, liquid release from SCW System cooling coil and tube failure, an airborne release from the CCW System cooling coil and tube failure, uncontrolled reaction involving a flammable gas/vapor deflagration, solvent extraction process fire, criticality, ruthenium volatilization, TBP/nitric acid explosion and an ammonium nitrate (AN) explosion in the PVV System filter (Ref. 9). Dominant accidents were screened to include all events resulting in significant consequences to the general public (the MOI receptor) or to the OEP located 100 meters from the event for ground level releases or at the plume touchdown point for elevated stack releases. Doses to facility workers in the immediate proximity of the event were not considered.

A.1.5.1 NATURAL PHENOMENA

The only natural phenomenon discussed in the SAR that results in a radiological release is the DBE, a PC–3 earthquake. Preliminary seismic analysis of the canyon structures and equipment indicates that overturning of vessels will not occur, but some line breaks may occur, resulting in loss of primary containment (Ref. 19). The building itself will remain intact, with minor cracking of the exterior walls. Therefore, the release sequence for an earthquake is the loss of radioactive material to the secondary confinement, with subsequent escape through cracks in the building, the canyon air supply inlet, a breach in the exhaust duct from 299-H as it enters the canyon exhaust tunnel, and a breach in the old HB-Line exhaust duct as it enters 292-H resulting in airborne releases at ground level. Rather than the filter penetration factor of 4.9E-3, a penetration factor (or leak path factor) of 1.0 was assumed for escape through the building cracks, the canyon air supply inlet, and the exhaust duct breaches discussed above. An earthquake is the only accident where it is appropriate to sum consequences and risks; and this is reflected in the Tables.

For the maximum consequence case, all the contents of the largest volume tank in each Unit Operation, at the maximum concentration, spills to the canyon floor. Both FWR and the second product cycle operations are not considered as these operations are not authorized. For other operations, a spilling Airborne Release Fraction (ARF) of 2.0E-05 is applied to the spilled solution, generating aerosols that fill the cell volume. A uniform release over 30 minutes is assumed from ground level through cracks in the canyon walls. Following the spill, evaporative entrainment of the pooled liquid occurs for the following 48 hours and is also released at ground level through cracks in the canyon walls at a uniform rate. An entrainment Airborne Release Rate (ARR) of 4.0E-08 per hour is applied to the entire inventory. See Tables A.1.5-1 and A.1.5-2 for the maximum curies released at ground level due to a PC–3 earthquake source terms.

The current earthquake analysis (Ref. 9) assumes that the second product Cycle and FWR are operational. However, these operations are currently not authorized by the H-Canyon safety basis documents. Based on the results of PISA PI-06-04, calculation S-CLC-H-01085 (Ref. 25) evaluated the consequences to the MOI and OEP by increasing the penetration factor (leak path factor) from 0.1 to 1.0, reducing the airborne release rate (ARR) from 4.0E-07 to 4.0E-08, and

assuming that the second product cycle and FWR are not used. The results show that the consequences are 21.9 rem to the OEP and 0.459 rem to the MOI (See Tables A.1.6-1A and 1B). These consequences represent an increase to the MOI by a factor of 2.6 and an increase to the OEP by a factor of 1.8 over that previously analyzed in Reference 9. The consequences reported in Reference 25 are still well below the SRS evaluation guidelines of 100 rem for the OEP and 25 rem for the MOI.

A.1.5.2 FIRE

For First Cycle, 2nd Neptunium Cycle, and 2nd U Cycle, the fire analysis assumes both an aqueous and a solvent source term. For the maximum consequence, all the contents of the largest volume tank in the Unit Operation, at maximum concentration, were assumed to be released to the canyon floor, where they are available for ignition. A release fraction of 1.0E-02 (Ref. 20) was assumed for all isotopes during combustion of a solvent layer over a large aqueous layer and burning to self extinguishment. Ventilation is assumed to remain operable, and a leak path factor of 4.9E-03 was applied to the release. Table A.1.5–3 lists the maximum curies released from the H–Canyon stack due to a fire. Note that the Dissolving, Head End, and Np–237 and Pu-239 storage unit operations do not appear in the fire source term tables because they are aqueous and do not burn.

Each process cell could be considered an individual fire area because construction features of the separating, removable walls placed between cells, and the covers placed over cells during processing isolate each cell. Any postulated fire would be contained by these barriers as they provide an equivalent fire-rating of two hours. In addition, a fire must have fuel or solvent to propagate from one fire zone to the next. Dissolving, Head End, and the storage tanks do not contain solvent, therefore a fire in solvent extraction would not propagate to these other unit operations.

An analysis of a solvent fire in the canyons, S-CLC-G-00256 (Reference 23), determined that a large solvent fire would not pressurize the canyon. This assumes that the canyon exhaust system is operating normally. Based on Reference 23, it is conservative to assume the leak path factor for a solvent fire will be 4.9E-03 since the canyon exhaust system will pull any airborne radionuclide particles through the sand filters.

The only combustible in FWR is the ion exchange resin. The source term assumes the maximum resin column loading in curies accumulates outside the column as spilled resin, where it dries out, ignites and burns. An ARF of 7.8E-03 is used (Ref. 20). See Table A.1.5-3 for the maximum curies released from the stack for a resin fire.

H-Canyon has in its inventory several radioactive sources that are tracked in the Sealed Radioactive Source Database. These sources are not specifically identified as source terms in the H-Canyon SAR. An evaluation was conducted (Ref. 24) that shows a very conservative treatment of the sources does not significantly increase the amount of radioactive material released from the H-Canyon analyzed in a solvent fire event (i.e., the only event in which a sealed source is anticipated to fail).

A.1.5.3 UNCONTROLLED REACTION

A postulated hydrogen deflagration uncontrolled reaction event is evaluated for maximum consequences. Ammonia and organic contributions to deflagration are bounded by the hydrogen detonation model used. The actual model used is a tri–nitro toluene (TNT) equivalent model in which the energy from the postulated hydrogen detonation involving a stoichiometric hydrogen-air mixture is converted to mass equivalent TNT. The contributions from ammonia and organics (assumed here to be dodecane) to a deflagration are bounded by hydrogen. This can be shown by calculating the energy released per liter for stoichiometric mixtures of each of these species in air. The stoichiometric concentrations are (29.5%) hydrogen and (21.1%) ammonia. The volume fraction of n-paraffin (dodecane) (0.02%) (Ref. 28) at operating temperature of 45°C (Ref. 26) is approximately fifty times less than the volume fraction at stoichiometric conditions (1.07%). Converting these concentrations to units of moles per liter gives 1.3E-02, 9.4E-03, and 9.06E-06 moles/liter, respectively. Multiplying by the heat of combustion (2.42E+05 J/mole for hydrogen, 3.17E+05 J/mole for ammonia, and 7.51E+06 J/mole for dodecane) (Ref. 27) gives energy releases of 3.2E+03 J/l for hydrogen, 3.0E+03 J/l for ammonia, and 6.8E+01 J/l for dodecane. Therefore, the combustion of a stoichiometric mixture of hydrogen bounds mixtures of hydrogen, ammonia, and organics.

It is assumed for process vessels that the deflagration occurs when 99% of the largest tank volume is filled with H_2, chemically balanced with O_2 from the radiolysis of water in the process liquids. A model (Ref. 21) based on TNT equivalency is used to assess the mass of aerosols generated by the deflagration and distributed in the cell volume. A deflagration is postulated to occur at the point of maximum energy release where the concentration of hydrogen and oxygen is at stoichiometric conditions, with hydrogen making up 30% of the available tank void space. The aerosol activity generated in the deflagration is based on the physical concentration limitation for the various process tanks analyzed. This model is consistent with that used to analyze the hydrogen deflagration event for other canyon processes. It is assumed that the H–Canyon ventilation remains intact, and that the sand filter functions to provide a leak path factor of 4.9E-03. Table A.1.5–4 shows the maximum curies released from the stack due to a hydrogen deflagration uncontrolled reaction.

The consequences of an uncontrolled reaction in H–Canyon that involves less than 3,000 pounds of TBP and additional amounts of nitric acid were calculated. Based on previous analysis as shown in this SAR, there are several tanks in H–Canyon in which both TBP and nitric acid could be present. The accident methodology assumes that a linear fraction of the involved inventory (2.0E-03) is released to the cell volume, and thus the larger the vessel involved in the reaction the greater the amount of aerosol particles generated for the event. This analysis considered the specific vessels in H–Canyon, which contain both TBP and nitric acid. It is assumed that the H–Canyon ventilation remains intact, and that the sand filter functions to provide a leak path factor of 4.9E-03. Table A.1.5–5 shows the maximum curies released from the stack due to a TBP/nitric acid uncontrolled reaction.

The filter for the PVV system collects significant amounts of AN over time. This material presents an explosion hazard, and it is postulated that an explosion in the filter may release radioactive material that has been collected. The source term used in the consequence calculation is given in Table 4 of Reference 9. This source term is based on the inventory of the

surface contamination on the PVV filter. The inventory used in the consequence calculation is based on the February 1997 PVV filter flush. The PVV filter inventory, including all other isotopes in proportion to their activity as listed in Reference 9 is assumed to represent the material at risk. Historical data provided from the facility provides best estimate mass quantities of AN, gross U and gross Pu present on the filter at infrequent maintenance intervals, and indicates that U is selectively adsorbed on the filter, while Pu is present in significantly lesser amounts. The assessment methodology assumes the filter activity is released with a conservative release fraction of 1.0E+00 and a leak path factor of 4.9E-03. Table A.1.5–6 shows the maximum curies released from the stack due to a PVV filter explosion.

A.1.5.4 CRITICALITY

Consequences of a maximum criticality are based on a solution accident that produces 1E19 fissions. Releases are distributed into two time bins, the first being the initial 30 minutes duration, and the second extending until 8 hours from initiation of the accident. A leak path factor of 1.0E+00 is assumed for noble gases, 2.5E-01 for halogens and 5.0E-04 for entrained solution particulates (Ref. 20). See Table A.1.5–7 for the maximum curies released from the stack due to criticality.

A.1.5.5 TRANSFER ERROR TO OUTSIDE FACILITIES

For transfer errors to 211-H, maximum consequences are assumed to be a transfer error to one of the vessels in 221-H of all the contents of the largest volume tank in the Unit Operation, at the maximum concentration. The transferred material is assumed to overflow the vessel and be contained within the 211-H Basin for all unit operations except FWR. The Basin is assumed to contain the spilled material, allowing no escape to surface or ground water. An ARF of 2.0E-05 (Ref. 20) is applied to the spilled solution, generating aerosols that are released from ground level without filtration. A uniform release over 30 minutes is assumed for the spilling segment of the accident, based on the average time required to complete a tank transfer. Following the spill, entrainment of the pooled liquid occurs for the following 24 hours and is also released at ground level at a uniform rate. An entrainment ARR of 4.0E-07/hr (Ref. 20) is applied to the entire inventory. FWR has both mass and concentration limits on all tanks. Therefore, for FWR, the smallest tank, at the maximum concentration, is used for the maximum consequence case. For FWR, the transferred material is contained within the basin tank and flushed with water. See Table A.1.5–8 for the maximum curies released from transfer errors to 211-H.

A.1.5.6 RUTHENIUM VOLATILIZATION

The maximum Ruthenium content of the remaining 5 fuel charges has been estimated and used to calculate a worst case accident involving volatilization. Based on a cooling time of 3,232 days and a batch size of 12 assemblies in the dissolver, and assuming a 1.0 release fraction, 136 Ci of Ru-106 may be released.

A.1.5.7 COIL AND TUBE FAILURE

Historically, the SAR reports mean accident cases in H–Canyon coil and tube failures that result in a release of 17 Ci of process material to the SCW System. The maximum consequence is assumed to be a release of a "slug" of process material to the SCW or CCW Systems, with subsequent failure to divert. For slug formation, it was assumed that a medium size hole develops in the cooling coil coincident with the loss of independent cooling water. Activity contained in the "slug" is based on the volume of the cooling coil and the maximum concentration of process liquid in the vessel. Reference 15 determined that an airborne release from the CCW System Cooling Tower from a coil and tube leak that results in a full coil volume slug of contaminated cooling water for FWR is a BEU event. Therefore, consequences and risks for this scenario will not be reported. However, the consequences for a smaller 600 Ci release are reported for this event. The 600 Ci release is based on operating history in which the largest release from a coil leak has been 300 Ci. The maximum leak observed to date was doubled to the 600 Ci release reported in this addendum for FWR, LAP, and other high content Pu–238 solutions that contain less than 5 kg total Pu–238. Reference 9 used a value of 25,400 Ci and 2,100 Ci for the MOI and the OEP, respectively, as the curies contained in the cooling coil before the contaminated water was released to the cooling tower. Based on the results for a full coil volume slug of Pu–238 solution from Reference 9, the consequences for a 600 Ci release of FWR or other Pu–238 solutions are 1.3E+02 mrem to the MOI and 5.1E+04 mrem to the OEP. The consequences given in Reference 9 will be reported for the airborne and liquid releases for all the other H–Canyon processes.

Similarly, for a liquid release to the environment, Reference 15 determined that a full coil volume slug release was a BEU event. Like the CCW System, a much smaller 600 Ci release from an entrainment scenario is a credible accident for the SCW System. The consequences of this 600 Ci release must be reported for the MOI for a release from the SCW System. There are no onsite receptors for a release from the SCW System since the release is a liquid release. Reference 9 used a value of 15,000 Ci as the maximum amount in the coil for a liquid release from the SCW System. Based on the results of a the coil volume for the slug release in Reference 9, adjusting for a 600 Ci release from this system gives consequences of 4.8E+02 mrem to the MOI.

Tables A.1.6–9 and A.1.6–10 summarize the risks from a coil and tube release for the CCW and the SCW Systems, respectively.

A.1.5.8 WASTE HEADER FAILURE

Because Reference 17 has shown that the Waste Header will not fail when subjected to earthquake and tornado loads, no consequences were calculated.

Table A.1.5-1 Curies Released at Ground Level from the Initial Spill in a PC–3 Earthquake

Bounding (MOI) Analysis Initial Spill			Median (Onsite) Analysis Initial Spill	
Radionuclide	Dissolving, Head End, 1st Cycle, and HAW (Ci)	2nd U, and LAW (Ci)	Dissolving, Head End, 1st Cycle, and HAW (Ci)	2nd U, and LAW (Ci)
Ag-110	9.62E-07		6.56E-09	
Am-241	7.69E-04	7.87E-05	4.28E-06	6.53E-07
Ce-144	1.66E-03		1.32E-05	
Cs-134	1.50E-02		1.35E-04	
Cs-137	3.69E-01		4.09E-03	
Eu-155	2.47E-03		2.54E-05	
Np-237	4.93E-06	5.79E-03	2.54E-08	3.48E-05
Pa-233		5.79E-03		3.48E-05
Pm-147	6.72E-02		6.59E-04	
Pr-144	1.66E-03		1.32E-05	
Pu-238	2.13E-02	1.92E-01	8.53E-05	1.42E-03
Pu-239	1.03E-04	1.35E-04	8.09E-07	1.00E-06
Pu-240	1.02E-04	8.51E-05	5.98E-07	6.28E-07
Pu-241	1.88E-02	1.92E-03	1.05E-04	1.41E-05
Pu-242	3.32E-07	8.71E-08	1.16E-09	6.42E-10
Rh-106	8.03E-04		6.87E-09	
Ru-106	8.03E-04		6.87E-06	
Sb-125	1.60E-03		1.61E-05	
Sn-123	1.07E-10		5.58E-13	
Sr-90	1.22E-01		1.35E-03	
U-234	2.63E-05	6.68E-06	4.02E-07	4.01E-08
U-235	2.28E-07	9.75E-08	5.40E-09	5.86E-10
U-236	7.26E-06	1.48E-06	5.16E-08	8.93E-09
U-238	1.95E-08	4.33E-09	1.40E-10	2.59E-11
Y-90	1.22E-01		1.35E-03	

Table A.1.5-2 Curies Released at Ground Level in the Recovery Phase from a PC–3 Earthquake

Bounding (MOI) Analysis Recovery Phase			Median (Onsite) Analysis Recovery	
Radionuclide	Dissolving, Head End, 1st Cycle, and HAW (Ci)	2nd U, and LAW (Ci)	Dissolving, Head End, 1st Cycle, and HAW (Ci)	2nd U, and LAW (Ci)
Ag-110	9.23E-07		4.20E-07	
Am-241	7.38E-04	7.56E-05	2.74E-04	4.18E-05
Ce-144	1.60E-03		8.43E-04	
Cs-134	1.44E-02		8.66E-03	
Cs-137	3.54E-01		2.61E-01	
Eu-155	2.37E-03		1.62E-03	
Np-237	4.73E-06	5.56E-03	1.62E-06	2.23E-03
Pa-233		5.56E-03		2.23E-03
Pm-147	6.46E-02		4.22E-02	
Pr-144	1.60E-03		8.43E-04	
Pu-238	2.05E-02	1.84E-01	5.46E-03	9.07E-02
Pu-239	9.85E-05	1.30E-04	5.18E-05	6.42E-05
Pu-240	9.82E-05	8.17E-05	3.83E-05	4.02E-05
Pu-241	1.81E-02	1.84E-03	6.72E-03	9.05E-04
Pu-242	3.19E-07	8.36E-08	7.40E-08	4.11E-08
Rh-106	7.71E-04		4.40E-07	
Ru-106	7.71E-04		4.40E-04	
Sb-125	1.53E-03		1.03E-03	
Sn-123	1.03E-10		3.57E-11	
Sr-90	1.17E-01		8.64E-02	
U-234	2.52E-05	6.42E-06	2.57E-05	2.56E-06
U-235	2.19E-07	9.36E-08	3.46E-07	3.75E-08
U-236	6.97E-06	1.42E-06	3.30E-06	5.72E-07
U-238	1.87E-08	4.16E-09	8.94E-09	1.66E-09
Y-90	1.17E-01		8.64E-02	

Table A.1.5-3 Curies Released from 291-H Stack due to Fire

Radionuclide	Bounding (MOI) Analysis			Median (Onsite) Analysis		
	1st Cycle (Ci)	2nd U and 2nd Np (Ci)	FWR (Ci)	1st Cycle (Ci)	2nd U and 2nd Np (Ci)	FWR (Ci)
Ag-110	1.43E-09			3.39E-10		
Am-241	2.32E-06		2.66E-04	4.22E-07		2.03E-04
Ce-144	2.47E-06			6.80E-07		
Cs-134	2.25E-05			7.00E-06		
Cs-137	5.49E-04			2.11E-04		
Eu-155	3.68E-06			1.31E-06		
Np-237	7.28E-05	5.47E-03		1.31E-05	1.22E-05	
Pa-233						
Pm-147	1.00E-04			3.70E-05		
Pr-144	2.47E-06			6.80E-07		
Pu-238	6.42E-05		4.37E-01	8.92E-06		3.54E-01
Pu-239	3.09E-07		3.10E-04	8.44E-08		2.41E-04
Pu-240	3.09E-07		1.72E-04	6.23E-08		1.38E-04
Pu-241	5.67E-05		6.47E-03	1.09E-05		5.26E-03
Pu-242	1.00E-09			1.21E-10		
Rh-106	1.20E-06			3.54E-07		
Ru-106	1.20E-06			3.54E-07		
Sb-125	2.38E-06			8.33E-07		
Sn-123						
Sr-90	1.82E-04			7.00E-05		
U-234	3.92E-04	4.87E-06		2.08E-04	3.22E-08	
U-235	3.46E-06	4.21E-08		2.79E-06	4.33E-10	
U-236	1.08E-04	1.34E-06		2.67E-05	4.14E-09	
U-238	2.91E-07	3.62E-09		7.21E-08	1.12E-11	
Y-90	1.82E-04			7.00E-05		

Table A.1.5-4 Curies Released from 291-H Stack due to Deflagration Uncontrolled Reaction (Initial Aerosol)

Radionuclide	Bounding (MOI) Analysis Deflagration Aerosolization				Median (Onsite) Analysis Deflagration Aerosolization			
	Dissolving, Head End, 1st Cycle, and HAW (Ci)	2nd U, 2nd Np, and LAW (Ci)	Np Storage and Pu Storage (Ci)	FWR (Ci)	Dissolving Head End, 1st Cycle, and HAW (Ci)	2nd U, 2nd Np, and LAW (Ci)	Np Storage and Pu Storage (Ci)	FWR (Ci)
Ag-110	1.22E-06				5.53E-07			
Am-241	9.74E-04	9.97E-05	1.13E-01	2.39E-03	3.62E-04	5.51E-05	2.18E-02	1.81E-04
Ce-144	2.10E-03				1.11E-03			
Cs-134	1.90E-02				1.14E-02			
Cs-137	4.67E-01				3.45E-01			
Eu-155	3.13E-03				2.14E-03			
Np-237	6.24E-06	7.33E-03			2.14E-06	2.93E-03		
Pa-233		7.33E-03				2.93E-03		
Pm-147	8.51E-02				5.56E-02			
Pr-144	2.10E-03				1.11E-03			
Pu-238	2.70E-02	2.43E-01	2.01E-01	3.92E+00	7.20E-03	1.20E-01	3.90E-02	4.91E-01
Pu-239	1.30E-04	1.71E-04	5.68E-04	2.64E-03	6.83E-05	8.46E-05	1.09E-04	3.31E-04
Pu-240	1.30E-04	1.08E-04	3.27E-02	1.40E-03	5.05E-05	5.30E-05	6.27E-03	1.74E-04
Pu-241	2.39E-02	2.43E-03	2.77E+00	5.83E-02	8.86E-03	1.19E-03	5.32E-01	7.28E-03
Pu-242	4.21E-07	1.10E-07	2.07E-03	1.87E-06	9.76E-08	5.42E-08	3.98E-04	2.34E-07
Rh-106	1.02E-03				5.80E-07			
Ru-106	1.02E-03				5.80E-04			
Sb-125	2.02E-03				1.36E-03			
Sn-123	1.36E-10				4.71E-11			
Sr-90	1.54E-01				1.14E-01			
U-234	3.33E-05	8.46E-06			3.39E-05	3.38E-06		
U-235	2.88E-07	1.23E-07			4.56E-07	4.95E-08		
U-236	9.19E-06	1.88E-06			4.35E-06	7.54E-07		
U-238	2.47E-08	5.48E-09			1.18E-08	2.19E-09		
Y-90	1.54E-01				1.14E-01			

Table A.1.5-4 Curies Released from 291-H Stack due to Flammable Gas/Vapor Deflagration Uncontrolled Reaction (Spill) (Continued)

	Bounding (MOI) Spill Analysis				Median (Onsite) Spill Analysis			
Radionuclide	Dissolving Head End, 1st Cycle, and HAW (Ci)	2nd U, 2nd Np, and LAW (Ci)	Np Storage and Pu Storage (Ci)	FWR (Ci)	Dissolving, Head End, 1st Cycle, and HAW (Ci)	2nd U, 2nd Np, and LAW (Ci)	Np Storage and Pu Storage (Ci)	FWR (Ci)
Ag-110	4.71E-08				3.21E-10			
Am-241	3.77E-05	3.86E-06	4.15E-03	3.91E-04	2.10E-07	3.20E-08	1.20E-05	8.30E-06
Ce-144	8.14E-05				6.46E-07			
Cs-134	7.37E-04				6.63E-06			
Cs-137	1.81E-02				2.00E-04			
Eu-155	1.21E-04				1.24E-06			
Np-237	2.42E-07	2.84E-04			1.24E-09	1.70E-06		
Pa-233		2.84E-04				1.70E-06		
Pm-147	3.29E-03				3.23E-05			
Pr-144	8.14E-05				6.46E-07			
Pu-238	1.04E-03	9.40E-03	7.36E-03	6.41E-01	4.18E-06	6.94E-05	2.14E-05	2.25E-02
Pu-239	5.03E-06	6.63E-06	2.08E-05	4.31E-04	3.96E-08	4.91E-08	6.01E-08	1.51E-05
Pu-240	5.01E-06	4.17E-06	1.20E-03	2.28E-04	2.93E-08	3.08E-08	3.45E-06	7.97E-06
Pu-241	9.23E-04	9.40E-05	1.01E-01	9.53E-03	5.14E-06	6.93E-07	2.92E-04	3.33E-04
Pu-242	1.63E-08	4.27E-09	7.59E-05	3.06E-07	5.67E-11	3.15E-11	2.18E-07	1.07E-08
Rh-106	3.94E-05				3.37E-10			
Ru-106	3.94E-05				3.37E-07			
Sb-125	7.82E-05				7.91E-07			
Sn-123	5.25E-12				2.74E-14			
Sr-90	5.97E-03				6.62E-05			
U-234	1.29E-06	3.27E-07			1.97E-08	1.96E-09		
U-235	1.12E-08	4.78E-09			2.65E-10	2.87E-11		
U-236	3.56E-07	7.26E-08			2.53E-09	4.38E-10		
U-238	9.55E-10	2.12E-10			6.84E-12	1.27E-12		
Y-90	5.97E-03				6.62E-05			

Table A.1.5–5 Curies Released from 291-H Stack due to TBP/Nitric Acid Uncontrolled Reaction

	Bounding (MOI) Analysis Deflagration Aerosolization		Median (Onsite) Analysis Deflagration Aerosolization	
Radionuclide	Head End, 1st Cycle, and HAW (Ci)	2nd U, 2nd Np, and LAW (Ci)	Head End, 1st Cycle, and HAW (Ci)	2nd U, 2nd Np, and LAW (Ci)
Ag-110	4.71E-06		1.07E-06	
Am-241	3.77E-03	3.86E-04	7.00E-04	1.07E-04
Ce-144	8.14E-03		2.15E-03	
Cs-134	7.37E-02		2.21E-02	
Cs-137	1.81E+00		6.67E-01	
Eu-155	1.21E-02		4.14E-03	
Np-237	2.42E-05	2.84E-02	4.14E-06	5.68E-03
Pa-233		2.84E-02		5.68E-03
Pm-147	3.29E-01		1.08E-01	
Pr-144	8.14E-03		2.15E-03	
Pu-238	1.04E-01	9.40E-01	1.39E-02	2.31E-01
Pu-239	5.03E-04	6.63E-04	1.32E-04	1.64E-04
Pu-240	5.01E-04	4.17E-04	9.77E-05	1.03E-04
Pu-241	9.23E-02	9.40E-03	1.71E-02	2.31E-03
Pu-242	1.63E-06	4.27E-07	1.89E-07	1.05E-07
Rh-106	3.94E-03		1.12E-06	
Ru-106	3.94E-03		1.12E-03	
Sb-125	7.82E-03		2.64E-03	
Sn-123	5.25E-10		9.12E-11	
Sr-90	5.97E-01		2.21E-01	
U-234	1.29E-04	3.27E-05	6.56E-05	6.54E-06
U-235	1.12E-06	4.78E-07	8.82E-07	9.57E-08
U-236	3.56E-05	7.26E-06	8.42E-06	1.46E-06
U-238	9.55E-08	2.12E-08	2.28E-08	4.24E-09
Y-90	5.97E-01		2.21E-01	

Table A.1.5–6 Curies Released from 291-H Stack due to Ammonium Nitrate Explosion in the PVV Filter Uncontrolled Reaction

Radionuclide	Bounding (MOI) and Median (Onsite) Analysis All Process Units (Ci)
Am-241	2.13E-02
Np-237	8.64E-06
Pu-238	7.67E+00
Pu-239	4.24E-02
Pu-240	1.80E-02
Pu-241	8.54E-01
Pu-242	1.46E-04
U-234	1.05E-04
U-235	1.12E-07
U-236	1.14E-06
U-238	2.84E-08

Table A.1.5–7 Curies Released from 291-H Stack due to Criticality (Plume 1)

	Bounding (MOI) Analysis Plume 1			Median (Onsite) Analysis Plume 1		
Radionuclide	Dissolving, Head End, 1st Cycle, and HAW (Ci)	2nd U and LAW (Ci)	Pu Storage (Ci)	Dissolving, Head End, 1st Cycle, and HAW (Ci)	2nd U and LAW (Ci)	Pu Storage (Ci)
Ag-110	5.56E-09			2.53E-09		
Am-241	4.45E-06	4.55E-07	4.90E-04	1.65E-06	2.52E-07	9.41E-05
Ce-144	9.61E-06			5.08E-06		
Cs-134	8.70E-05			5.21E-05		
Cs-137	2.13E-03			1.58E-03		
Eu-155	1.43E-05			9.78E-06		
I-131	3.86E-01	3.86E-01	3.86E-01	3.86E-01	3.86E-01	3.86E-01
I-132	4.10E+01	4.10E+01	4.10E+01	4.10E+01	4.10E+01	4.10E+01
I-133	5.68E+00	5.68E+00	5.68E+00	5.68E+00	5.68E+00	5.68E+00
I-134	1.51E+02	1.51E+02	1.51E+02	1.51E+02	1.51E+02	1.51E+02
I-135	1.59E+01	1.59E+01	1.59E+01	1.59E+01	1.59E+01	1.59E+01
Kr-83m	1.54E+01	1.54E+01	1.54E+01	1.54E+01	1.54E+01	1.54E+01
Kr-85	1.18E-04	1.18E-04	1.18E-04	1.18E-04	1.18E-04	1.18E-04
Kr-85m	9.88E+00	9.88E+00	9.88E+00	9.88E+00	9.88E+00	9.88E+00
Kr-87	6.03E+01	6.03E+01	6.03E+01	6.03E+01	6.03E+01	6.03E+01
Kr-88	3.26E+01	3.26E+01	3.26E+01	3.26E+01	3.26E+01	3.26E+01
Np-237	2.85E-08	3.35E-05		9.78E-09	1.34E-05	
Pa-233		3.35E-05			1.34E-05	
Pm-147	3.89E-04			2.54E-04		
Pr-144	9.61E-06			5.08E-06		
Pu-238	1.23E-04	1.11E-03	8.69E-04	3.29E-05	5.46E-04	1.69E-04
Pu-239	5.93E-07	7.83E-07	2.46E-06	3.12E-07	3.87E-07	4.73E-07
Pu-240	5.92E-07	4.92E-07	1.41E-04	2.31E-07	2.42E-07	2.71E-05
Pu-241	1.09E-04	1.11E-05	1.20E-02	4.05E-05	5.45E-06	2.30E-03
Pu-242	1.92E-09	5.04E-10	8.95E-06	4.46E-10	2.48E-10	1.72E-06
Rh-106	4.65E-06			2.65E-09		
Ru-106	9.29E-06			5.30E-06		
Sb-125	9.23E-06			6.22E-06		
Sn-123	6.20E-13			2.15E-13		
Sr-90	7.05E-04			5.21E-04		
U-234	1.52E-07	3.87E-08		1.55E-07	1.54E-08	
U-235	1.32E-09	5.64E-10		2.08E-09	2.26E-10	
U-236	4.20E-08	8.58E-09		1.99E-08	3.44E-09	
U-238	1.13E-10	2.50E-11		5.39E-11	1.00E-11	
Xe-131m	1.40E-02	1.40E-02	1.40E-02	1.40E-02	1.40E-02	1.40E-02
Xe-133	3.76E+00	3.76E+00	3.76E+00	3.76E+00	3.76E+00	3.76E+00
Xe-133m	3.10E-01	3.10E-01	3.10E-01	3.10E-01	3.10E-01	3.10E-01
Xe-135	5.71E+01	5.71E+01	5.71E+01	5.71E+01	5.71E+01	5.71E+01
Xe-135m	4.57E+02	4.57E+02	4.57E+02	4.57E+02	4.57E+02	4.57E+02
Xe-138	1.54E+03	1.54E+03	1.54E+03	1.54E+03	1.54E+03	1.54E+03
Y-90	7.05E-04			5.21E-04		

Table A.1.5–7 Curies Released from 291-H Stack due to Criticality (Plume 2) (Continued)

	Bounding (MOI) Analysis Plume 2			Median (Onsite) Analysis Plume 2		
Radionuclide	Dissolving, Head End, 1st Cycle, and HAW (Ci)	2nd U and LAW (Ci)	Pu Storage (Ci)	Dissolving, Head End, 1st Cycle, and HAW (Ci)	2nd U and LAW (Ci)	Pu Storage (Ci)
I-131	2.36E+00	2.36E+00	2.36E+00	2.36E+00	2.36E+00	2.36E+00
I-132	2.51E+02	2.51E+02	2.51E+02	2.51E+02	2.51E+02	2.51E+02
I-133	3.48E+01	3.48E+01	3.48E+01	3.48E+01	3.48E+01	3.48E+01
I-134	9.24E+02	9.24E+02	9.24E+02	9.24E+02	9.24E+02	9.24E+02
I-135	9.74E+01	9.74E+01	9.74E+01	9.74E+01	9.74E+01	9.74E+01
Kr-83m	9.46E+01	9.46E+01	9.46E+01	9.46E+01	9.46E+01	9.46E+01
Kr-85	7.22E-04	7.22E-04	7.22E-04	7.22E-04	7.22E-04	7.22E-04
Kr-85m	6.05E+01	6.05E+01	6.05E+01	6.05E+01	6.05E+01	6.05E+01
Kr-87	3.70E+02	3.70E+02	3.70E+02	3.70E+02	3.70E+02	3.70E+02
Kr-88	1.99E+02	1.99E+02	1.99E+02	1.99E+02	1.99E+02	1.99E+02
Xe-131m	8.60E-02	8.60E-02	8.60E-02	8.60E-02	8.60E-02	8.60E-02
Xe-133	2.30E+01	2.30E+01	2.30E+01	2.30E+01	2.30E+01	2.30E+01
Xe-133m	1.90E+00	1.90E+00	1.90E+00	1.90E+00	1.90E+00	1.90E+00
Xe-135	3.50E+02	3.50E+02	3.50E+02	3.50E+02	3.50E+02	3.50E+02
Xe-135m	2.80E+03	2.80E+03	2.80E+03	2.80E+03	2.80E+03	2.80E+03
Xe-138	9.46E+03	9.46E+03	9.46E+03	9.46E+03	9.46E+03	9.46E+03

Table A.1.5–8 Curies Released at Ground Level due to Transfer Error to 211-H From the Initial Spill

Radionuclide	Bounding (MOI) Spill Analysis				Median (Onsite) Spill Analysis			
	Dissolving, Head End, 1st Cycle, and HAW (Ci)	2nd U, 2nd Np, and LAW (Ci)	Np Storage and Pu Storage (Ci)	FWR (Ci)	Dissolving, Head End, 1st Cycle, and HAW (Ci)	2nd U, 2nd Np, and LAW (Ci)	Np Storage and Pu Storage (Ci)	FWR (Ci)
Ag-110	9.62E-06				6.56E-08			
Am-241	7.69E-03	7.87E-04	8.46E-01	5.22E-03	4.28E-05	6.53E-06	2.44E-03	5.57E-04
Ce-144	1.66E-02				1.32E-04			
Cs-134	1.50E-01				1.35E-03			
Cs-137	3.69E+00				4.09E-02			
Eu-155	2.47E-02				2.54E-04			
Np-237	4.93E-05	5.79E-02			2.54E-07	3.48E-04		
Pa-233		5.79E-02				3.48E-04		
Pm-147	6.72E-01				6.59E-03			
Pr-144	1.66E-02				1.32E-04			
Pu-238	2.13E-01	1.92E+00	1.50E+00	8.57E+00	8.53E-04	1.42E-02	4.37E-03	1.51E+00
Pu-239	1.03E-03	1.35E-03	4.25E-03	5.76E-03	8.09E-06	1.00E-05	1.23E-05	1.02E-03
Pu-240	1.02E-03	8.51E-04	2.44E-01	3.05E-03	5.98E-06	6.28E-06	7.03E-04	5.35E-04
Pu-241	1.88E-01	1.92E-02	2.07E+01	1.27E-01	1.05E-03	1.41E-04	5.97E-02	2.24E-02
Pu-242	3.32E-06	8.71E-07	1.55E-02	4.09E-06	1.16E-08	6.42E-09	4.46E-05	7.19E-07
Rh-106	8.03E-03				6.87E-08			
Ru-106	8.03E-03				6.87E-05			
Sb-125	1.60E-02				1.61E-04			
Sn-123	1.07E-09				5.58E-12			
Sr-90	1.22E+00				1.35E-02			
U-234	2.63E-04	6.68E-05			4.02E-06	4.01E-07		
U-235	2.28E-06	9.75E-07			5.40E-08	5.86E-09		
U-236	7.26E-05	1.48E-05			5.16E-07	8.93E-08		
U-238	1.95E-07	4.33E-08			1.40E-09	2.59E-10		
Y-90	1.22E+00				1.35E-02			

Table A.1.5–8 Curies Released at Ground Level due to Transfer Error to 211-H During Recovery Phase (Continued)

Radionuclide	Bounding (MOI) Recovery Phase				Median (Onsite) Recovery Phase			
	Dissolving, Head End, 1st Cycle, and HAW (Ci)	2nd U, 2nd Np, and LAW (Ci)	Np Storage and Pu Storage (Ci)	FWR (Ci)	Dissolving, Head End, 1st Cycle, and HAW (Ci)	2nd U, 2nd Np, and LAW (Ci)	Np Storage and Pu Storage (Ci)	FWR (Ci)
Ag-110	4.62E-05				3.50E-06			
Am-241	3.69E-02	3.78E-03	4.06E+00	5.02E-03	2.28E-03	3.48E-04	1.30E-01	3.18E-04
Ce-144	7.98E-02				7.03E-03			
Cs-134	7.22E-01				7.21E-02			
Cs-137	1.77E+01				2.18E+00			
Eu-155	1.19E-01				1.35E-02			
Np-237	2.37E-04	2.78E-01			1.35E-05	1.85E-02		
Pa-233		2.78E-01				1.85E-02		
Pm-147	3.23E+00				3.51E-01			
Pr-144	7.98E-02				7.03E-03			
Pu-238	1.02E+00	9.21E+00	7.21E+00	8.22E+00	4.55E-02	7.56E-01	2.33E-01	8.62E-01
Pu-239	4.92E-03	6.49E-03	2.04E-02	5.53E-03	4.31E-04	5.35E-04	6.54E-04	5.80E-04
Pu-240	4.91E-03	4.08E-03	1.17E+00	2.93E-03	3.19E-04	3.35E-04	3.75E-02	3.06E-04
Pu-241	9.04E-01	9.21E-02	9.93E+01	1.22E-01	5.60E-02	7.54E-03	3.18E+00	1.28E-02
Pu-242	1.60E-05	4.18E-06	7.43E-02	3.92E-06	6.17E-07	3.43E-07	2.38E-03	4.11E-07
Rh-106	3.86E-02				3.66E-06			
Ru-106	3.86E-02				3.66E-03			
Sb-125	7.66E-02				8.61E-03			
Sn-123	5.14E-09				2.98E-10			
Sr-90	5.85E+00				7.20E-01			
U-234	1.26E-03	3.21E-04			2.14E-04	2.14E-05		
U-235	1.09E-05	4.68E-06			2.88E-06	3.13E-07		
U-236	3.49E-04	7.12E-05			2.75E-05	4.76E-06		
U-238	9.36E-07	2.08E-07			7.45E-08	1.38E-08		
Y-90	5.85E+00				7.20E-01			

Table A.1.5–9 Curies Released into the Atmosphere from a Coil and Tube Failure in the Circulated Cooling Water System

	Bounding (MOI)						
Radionuclide	Dissolving, and Head End, (Ci)	1st Cycle and HAW (Ci)	2nd U Cycle (Ci)	2nd Np Cycle and LAW (Ci)	Np Storage (Ci)	Pu Storage (Ci)	FWR[1] (Ci)
Ag-110	8.34E-06	8.61E-06					
Am-241	6.67E-03	6.89E-03	6.82E-04	7.05E-04	6.75E-01	8.36E-01	7.35E-04
Ce-144	1.44E-02	1.49E-02					
Cs-134	1.30E-01	1.35E-01					
Cs-137	3.20E+00	3.30E+00					
Eu-155	2.14E-02	2.22E-02					
Np-237	4.28E-05	4.42E-05	5.02E-02	5.19E-02			
Pa-233			5.02E-02	5.19E-02			
Pm-147	5.83E-01	6.02E-01					
Pr-144	1.44E-02	1.49E-02					
Pu-238	1.85E-01	1.91E-01	1.66E+00	1.72E+00	1.20E+00	1.48E+00	1.20E+03
Pu-239	8.89E-04	9.19E-04	1.17E-03	1.21E-03	3.39E-03	4.20E-03	8.10E-04
Pu-240	8.87E-04	9.16E-04	7.37E-04	7.62E-04	1.95E-01	2.41E-01	4.29E-04
Pu-241	1.63E-01	1.69E-01	1.66E-02	1.72E-02	1.65E+01	2.04E+01	1.79E-02
Pu-242	2.88E-06	2.98E-06	7.55E-07	7.80E-07	1.23E-02	1.53E-02	5.76E-07
Rh-106	6.96E-03	7.20E-03					
Ru-106	6.96E-03	7.20E-03					
Sb-125	1.38E-02	1.43E-02					
Sn-123	9.29E-10	9.60E-10					
Sr-90	1.06E+00	1.09E+00					
U-234	2.28E-04	2.36E-04	5.79E-05	5.99E-05			
U-235	1.97E-06	2.04E-06	8.46E-07	8.74E-07			
U-236	6.29E-05	6.50E-05	1.29E-05	1.33E-05			
U-238	1.69E-07	1.75E-07	3.75E-08	3.88E-08			
Y-90	1.06E+00	1.09E+00					

1. Adjusted for an initial 600 Ci slug in the coil.

Table A.1.5–9 Curies Released into the Atmosphere From a Coil and Tube Failure in the Circulated Cooling Water System (Continued)

	Median (Onsite OEP)						
Radionuclide	Dissolving, and Head End, (Ci)	1st Cycle and HAW (Ci)	2nd U Cycle (Ci)	2nd Np Cycle and LAW (Ci)	Np Storage (Ci)	Pu Storage (Ci)	FWR[1] (Ci)
Ag-110	4.51E-05	4.66E-06					
Am-241	2.95E-03	3.05E-03	3.77E-04	3.90E-04	1.30E-01	1.61E-01	4.45E-04
Ce-144	9.07E-03	9.38E-03					
Cs-134	9.31E-02	9.62E-02					
Cs-137	2.81E+00	2.91E+00					
Eu-155	1.75E-02	1.80E-02					
Np-237	1.75E-05	1.80E-05	2.01E-02	2.08E-02			
Pa-233			2.01E-02	2.08E-02			
Pm-147	4.54E-01	4.69E-01					
Pr-144	9.07E-03	9.38E-03					
Pu-238	5.87E-02	6.07E-02	8.19E-01	8.46E-01	2.32E-01	2.88E-01	1.21E+00
Pu-239	5.57E-04	5.75E-04	5.79E-04	5.99E-04	6.52E-04	8.08E-04	8.11E-04
Pu-240	4.12E-04	4.25E-04	3.63E-04	3.75E-04	3.74E-02	4.63E-02	4.27E-04
Pu-241	7.22E-02	7.47E-02	8.17E-03	8.44E-03	3.17E+00	3.93E+00	1.79E-02
Pu-242	7.96E-07	8.23E-07	3.71E-07	3.84E-07	2.37E-03	2.94E-03	5.74E-07
Rh-106	4.73E-06	4.89E-06					
Ru-106	4.73E-03	4.89E-03					
Sb-125	1.11E-02	1.15E-02					
Sn-123	3.84E-10	3.97E-10					
Sr-90	9.30E-01	9.61E-01					
U-234	2.77E-04	2.86E-04	2.32E-05	2.39E-05			
U-235	3.72E-06	3.84E-06	3.39E-07	3.50E-07			
U-236	3.55E-05	3.67E-05	5.16E-06	5.33E-06			
U-238	9.62E-08	9.94E-08	1.50E-08	1.55E-08			
Y-90	9.30E-01	9.61E-01					

1. Adjusted for an initial 600 Ci slug in the coil.

Table A.1.5–10 Curies Released into the Surface Waterways From a Coil and Tube Failure in the Segregated Cooling Water System

	Bounding (MOI)							
Radionuclide	Dissolving (Ci)	Head End (Ci)	1st Cycle, (Ci)	HAW (Ci)	2nd U Cycle (Ci)	2nd Np Cycle (Ci)	LAW (Ci)	FWR[1] (Ci)
Ag-110	4.22E-03	4.09E-03	4.22E-03	6.88E-03				
Am-241	3.38E+00	3.27E+00	3.38E+00	5.50E+00	3.46E-01	5.63E-01	5.63E-01	3.67E-01
Ce-144	7.30E+00	7.06E+00	7.30E+00	1.19E+01				
Cs-134	6.61E+01	6.39E+01	6.61E+01	1.08E+02				
Cs-137	1.62E+03	1.57E+03	1.62E+03	2.64E+03				
Eu-155	1.09E+01	1.05E+01	1.09E+01	1.77E+01				
Np-237	2.17E-02	2.10E-02	2.17E-02	3.53E-02	2.54E+01	4.14E+01	4.14E+01	
Pa-233					2.54E+01	4.14E+01	4.14E+01	
Pm-147	2.95E+02	2.86E+02	2.95E+02	4.81E+02				
Pr-144	7.30E+00	7.06E+00	7.30E+00	1.19E+01				
Pu-238	9.36E+01	9.06E+01	9.36E+01	1.53E+02	8.42E+02	1.37E+03	1.37E+03	6.00E+02
Pu-239	4.50E-01	4.36E-01	4.50E-01	7.34E-01	5.94E-01	9.68E-01	9.68E-01	4.04E-01
Pu-240	4.49E-01	4.35E-01	4.49E-01	7.32E-01	3.74E-01	6.09E-01	6.09E-01	2.14E-01
Pu-241	8.27E+01	8.01E+01	8.27E+01	1.35E+02	8.42E+00	1.37E+01	1.37E+01	8.92E+00
Pu-242	1.46E-03	1.41E-03	1.46E-03	2.38E-03	3.82E-04	6.23E-04	6.23E-04	2.87E-04
Rh-106	3.53E+00	3.41E+00	3.53E+00	5.75E+00				
Ru-106	3.53E+00	3.41E+00	3.53E+00	5.75E+00				
Sb-125	7.01E+00	6.78E+00	7.01E+00	1.14E+01				
Sn-123	4.71E-07	4.55E-07	4.71E-07	7.66E-07				
Sr-90	5.35E+02	5.18E+02	5.35E+02	8.71E+02				
U-234	1.15E-01	1.12E-01	1.15E-01	1.88E-01	2.93E-02	4.78E-02	4.78E-02	
U-235	1.00E-03	9.67E-04	1.00E-03	1.63E-03	4.28E-04	6.98E-04	6.98E-04	
U-236	3.19E-02	3.09E-02	3.19E-02	5.19E-02	6.51E-03	1.06E-02	1.06E-02	
U-238	8.56E-05	8.28E-05	8.56E-05	1.39E-04	1.90E-05	3.10E-05	3.10E-05	
Y-90	5.35E+02	5.18E+02	5.35E+02	8.72E+02				

1. Adjusted for an initial 600 Ci slug in the coil.

A.1.6 RADIOLOGICAL DOSES AND RISKS

Doses from airborne release of radioactive material were calculated with the MACCS computer code (Ref. 5) except where noted otherwise.

A.1.6.1 DOSES AND RISKS DUE TO NATURAL PHENOMENA

The only natural phenomena discussed in the SAR that results in a radiological release is the DBE, a PC–3 earthquake. The release sequence for an earthquake is the loss of radioactive material to the secondary confinement, with subsequent escape through cracks in the building, canyon air supply inlet, and exhaust ducts entering 292-H and leaving 299-H resulting in airborne releases at ground level. Doses and risks for the estimated maximum consequences due to a PC–3 earthquake for MOI and Onsite OEP are tabulated and summed in Tables A.1.6-1A and A.1.6-1B, respectively.

A.1.6.2 DOSES AND RISKS DUE TO PROCESS RELATED OCCURRENCES

For process related occurrences, various events can lead to airborne releases from the stack, ground level airborne releases, and liquid releases to Four Mile Creek. Doses and risks for the estimated maximum consequences due to process related occurrences for MOI and the OEP (e.g., Effective Dose Equivalent [EDE]) are tabulated in Tables A.1.6–2A, and B, through Tables A.1.6–10A and B, respectively.

Table A.1.6–1 Dose and Risk Due to an Earthquake

Table A.1.6–1A Dose and Risk to the Maximum Offsite Individual From an Earthquake with Maximum Source Terms

Unit Operation	Frequency (per year)	Dose to MOI (EDE, mrem)	Risk (mrem/yr)
Dissolving	5.0E-04	2.22E+01	1.11E-02
Head End	5.0E-04	2.22E+01	1.11E-02
1st Cycle	5.0E-04	2.22E+01	1.11E-02
HAW	5.0E-04	2.22E+01	1.11E-02
LAW	5.0E-04	1.85E+02	9.26E-02
2nd U Cycle	5.0E-04	1.85E+02	9.26E-02
Total	5.0E-04	4.59E+02	2.30E-01

Table A.1.6–1B Dose and Risk to the OEP From an Earthquake with Nominal Source Terms

Unit	Frequency (per year)	Dose to OEP (EDE mrem)	Risk (mrem/yr)
Dissolving	5.0E-04	6.52E+02	3.26E-01
Head End	5.0E-04	6.52E+02	3.26E-01
1st Cycle	5.0E-04	6.52E+02	3.26E-01
HAW	5.0E-04	6.52E+02	3.26E-01
LAW	5.0E-04	9.63E+03	4.81E+00
2nd U Cycle	5.0E-04	9.63E+03	4.81E+00
Total	5.0E-04	2.19E+04	1.09E+01

Table A.1.6–2 Dose and Risk Due to a Fire

Table A.1.6–2A Dose and Risk to the MOI From a Fire With Maximum Source Terms

Unit Operation	Frequency (per year)	MOI (EDE, mrem)	Risk (mrem/yr)
1st Cycle	6.1E-04	4.7E-02	2.9E-05
2nd Np Cycle	6.1E-04	1.0E+00	6.1E-04
2nd U Cycle	6.1E-04	1.0E+00	6.1E-04
FWR	1.1E-03	5.6E+01	6.2E-02

Table A.1.6–2B Dose and Risk to the OEP From a Fire With Nominal Source Terms

Unit Operation	Frequency (per year)	Dose to OEP (EDE, mrem)	Risk (mrem/yr)
1st Cycle	6.1E-04	1.1E-01	6.7E-05
2nd Np Cycle	6.1E-04	1.5E-02	9.2E-06
2nd U Cycle	6.1E-04	1.5E-02	9.2E-06
FWR	1.1E-03	3.4E+02	3.7E-01

Table A.1.6–3 Dose and Risk Due to a Hydrogen Deflagration

Table A.1.6–3A Dose and Risk to the MOI From a Hydrogen Deflagration With Maximum Source Terms

Unit Operation	Frequency (per year)	Dose to MOI (EDE, mrem)	Risk (mrem/yr)
Dissolving	5.3E-05	6.3E+00	3.3E-04
Head End	5.3E-05	6.3E+00	3.3E-04
1st Cycle	5.3E-05	6.3E+00	3.3E-04
HAW	5.3E-05	6.3E+00	3.3E-04
2nd Np Cycle	5.3E-05	5.5E+01	2.9E-03
2nd U Cycle	5.3E-05	5.5E+01	2.9E-03
LAW	5.3E-05	5.5E+01	2.9E-03
Np Storage	5.3E-05	9.3E+01	4.9E-03
Pu Storage	5.3E-05	9.3E+01	4.9E-03
FWR	5.3E-05	9.3E+02	4.9E-02

Table A.1.6–3B Dose and Risk to the OEP From a Hydrogen Deflagration With Nominal Source Terms

Unit Operation	Frequency (per year)	Dose to OEP (EDE, mrem)	Risk (mrem/yr)
Dissolving	5.3E-05	1.0E+01	5.3E-04
Head End	5.3E-05	1.0E+01	5.3E-04
1st Cycle	5.3E-05	1.0E+01	5.3E-04
HAW	5.3E-05	1.0E+01	5.3E-04
2nd Np Cycle	5.3E-05	1.5E+02	8.0E-03
2nd U Cycle	5.3E-05	1.5E+02	8.0E-03
LAW	5.3E-05	1.5E+02	8.0E-03
Np Storage	5.3E-05	1.0E+02	5.3E-03
Pu Storage	5.3E-05	1.0E+02	5.3E-03
FWR	5.3E-05	7.0E+02	3.7E-02

Table A.1.6–4 Dose and Risk Due to a TBP/Nitric Acid Reaction

Table A.1.6–4A Dose and Risk to the MOI From a TBP/Nitric Acid Reaction With Maximum Source Terms

Unit Operation	Frequency (per year)	Dose to MOI (EDE, mrem)	Risk (mrem/yr)
Head End	8.0E-05	2.3E+01	1.8E-03
1st Cycle	8.0E-05	2.3E+01	1.8E-03
HAW	1.0E-04	2.3E+01	2.3E-03
2nd Np Cycle	8.0E-05	2.2E+02	1.8E-02
2nd U Cycle	8.0E-05	2.2E+02	1.8E-02
LAW	1.0E-04	2.2E+02	2.2E-02

Table A.1.6–4B Dose and Risk to the OEP From a TBP/Nitric Acid Reaction With Nominal Source Terms

Unit Operation	Frequency (per year)	Dose to OEP (EDE, mrem)	Risk (mrem/yr)
Head End	8.0E-05	2.1E+01	1.7E-03
1st Cycle	8.0E-05	2.1E+01	1.7E-03
HAW	1.0E-04	2.1E+01	2.1E-03
2nd Np Cycle	8.0E-05	3.1E+02	2.5E-02
2nd U Cycle	8.0E-05	3.1E+02	2.5E-02
LAW	1.0E-04	3.1E+02	3.1E-02

Table A.1.6–5 Dose and Risk Due to a PVV Filter Explosion

Table A.1.6–5A Dose and Risk to the MOI From a PVV Filter Explosion With Maximum Source Terms

Unit Operation	Frequency (per year)	Dose to MOI (EDE, mrem)	Risk (mrem/yr)
Any Process (not process specific)	1.0E-05	1.5E+03	1.5E-02

Table A.1.6–5B Dose and Risk to the OEP From a PVV Filter Explosion With Nominal Source Terms

Unit Operation	Frequency (per year)	Dose to OEP (EDE, mrem)	Risk (mrem/yr)
Any Process (not process specific)	1.0E-05	1.0E+04	1.0E-01

Table A.1.6–6 Dose and Risk Due to a Criticality

Table A.1.6–6A Dose and Risk to the MOI From a Criticality With Maximum Source Terms

Unit Operation	Frequency (per year)	Dose to MOI (EDE, mrem)	Risk (mrem/yr)
Dissolving	1.3E-05	2.1E-01	2.7E-06
Head End	1.9E-06	2.1E-01	4.0E-07
1st Cycle	1.6E-03	2.1E-01	3.4E-04
HAW	1.1E-04	2.1E-01	2.3E-05
2nd U Cycle	1.6E-03	3.2E-01	5.1E-04
LAW	1.1E-04	3.2E-01	3.5E-05
Pu Storage	1.6E-03	3.9E-01	6.2E-04

Table A.1.6–6B Dose and Risk to the OEP From a Criticality With Nominal Source Terms

Unit Operation	Frequency (per year)	Dose to OEP (EDE, mrem)	Risk (mrem/yr)
Dissolving	1.3E-05	5.4E+00	7.0E-05
Head End	1.9E-06	5.4E+00	1.0E-05
1st Cycle	1.6E-03	5.4E+00	8.6E-03
HAW	1.1E-04	5.4E+00	5.9E-04
2nd U Cycle	1.6E-03	6.4E+00	1.0E-02
LAW	1.1E-04	6.4E+00	7.0E-04
Pu Storage	1.6E-03	5.9E+00	9.4E-03

Table A.1.6–7 Dose and Risk Due to a Transfer Error

Table A.1.6–7A Dose and Risk to Offsite Maximum Individual From a Transfer Error to 211-H with Maximum Source Terms

Unit Operation	Frequency (per year)	Dose to MOI (EDE, mrem)	Risk (mrem/yr)
Dissolving	9.4E-06	6.4E+01	6.0E-04
Head End	1.5E-05	6.4E+01	9.6E-04
1st Cycle	1.5E-05	6.4E+01	9.6E-04
HAW	1.9E-05	6.4E+01	1.2E-03
2nd Np Cycle	1.3E-05	6.1E+02	7.9E-03
2nd U Cycle	5.0E-06	6.1E+02	3.1E-03
LAW	1.9E-05	6.1E+02	1.2E-02
Np Storage	9.6E-05	9.1E+02	8.7E-02
Pu Storage	9.6E-05	9.1E+02	8.7E-02
FWR	9.1E-06	1.0E+03	9.1E-03

Table A.1.6–7B Dose and Risk to OEP From a Transfer Error to 211-H with Nominal Source Terms

Unit Operation	Frequency (per year)	Dose to (EDE, mrem)	Risk (mrem/yr)
Dissolving	9.4E-06	8.1E+02	7.6E-03
Head End	1.5E-05	8.1E+02	1.2E-02
1st Cycle	1.5E-05	8.1E+02	1.2E-02
HAW	1.9E-05	8.1E+02	1.5E-02
2nd Np Cycle	1.3E-05	1.2E+04	1.6E-01
2nd U Cycle	5.0E-06	1.2E+04	6.0E-02
LAW	1.9E-05	1.2E+04	2.3E-01
Np Storage	9.6E-05	7.8E+03	7.5E-01
Pu Storage	9.6E-05	7.8E+03	7.5E-01
FWR	9.1E-06	3.9E+04	3.5E-01

Table A.1.6–8 Dose and Risk Due to Ruthenium Volatilization

Table A.1.6-8A Dose and Risk to Offsite Maximum Individual From a Ruthenium Volatilization with Maximum Source Terms

Unit Operation	Frequency (per year)	Dose to MOI (EDE, mrem)	Risk (mrem/yr)
Dissolving	8.8E-02	3.5E+01	3.1E+00
Head End	8.8E-02	3.5E+01	3.1E+00

Table A.1.6-8B Dose and Risk to OEP From a Ruthenium Volatilization with Nominal Source Terms

Unit Operation	Frequency (per year)	Dose to OEP (EDE, mrem)	Risk (mrem/yr)
Dissolving	8.8E-02	2.5E+02	2.2E+01
Head End	8.8E-02	2.5E+02	2.2E+01

Table A.1.6–9 Dose and Risk Due to the Circulated Cooling Water Cooling Tower (Airborne Release)

Table A.1.6–9A Dose and Risk to the MOI From a Coil and Tube Leak From a Cooling Tower Airborne Release With Maximum Source Terms

Unit Operation	Frequency (per year)	Dose to MOI (EDE, mrem)	Risk (mrem/yr)
Dissolving	7.2E-05	2.2E+01	1.6E-03
Head End	7.2E-05	2.2E+01	1.6E-03
1st Cycle	7.2E-05	2.2E+01	1.6E-03
HAW	7.2E-05	2.2E+01	1.6E-03
2nd Np Cycle	7.2E-05	1.8E+02	1.3E-02
2nd U Cycle	7.2E-05	1.7E+02	1.2E-02
LAW	7.2E-05	1.8E+02	1.3E-02
Np Storage	7.2E-05	2.6E+02	1.9E-02
Pu Storage	7.2E-05	3.3E+02	2.4E-02
FWR[1]	7.2E-05	1.3E+02[1]	9.4E-03[1]

1. Based on a 600 Curie slug of radioactive material for FWR only.

Table A.1.6–9B Dose and Risk to the OEP From a Coil and Tube Leak From a Cooling Tower Airborne Release With Nominal Source Terms

Unit Operation	Frequency (per year)	Dose to OEP (EDE, mrem)	Risk (mrem/yr)
Dissolving	7.2E-05	2.6E+03	1.9E-01
Head End	7.2E-05	2.6E+03	1.9E-01
1st Cycle	7.2E-05	3.1E+03	2.2E-01
HAW	7.2E-05	3.1E+03	2.2E-01
2nd Np Cycle	7.2E-05	3.3E+04	2.4E+00
2nd U Cycle	7.2E-05	3.3E+04	2.4E+00
LAW	7.2E-05	3.3E+04	2.4E+00
Np Storage	7.2E-05	2.2E+04	1.6E+00
Pu Storage	7.2E-05	2.6E+04	1.9E+00
FWR[1]	7.2E-05	5.1E+04[1]	3.7E+00[1]

1. Based on a 600 Curie slug of radioactive material for FWR only.

Table A.1.6–10 Dose and Risk from a Coil and Tube Release to the Segregated Cooling Water System (Liquid Release to the Surface Waters)

Table A.1.6–10A Dose and Risk to the MOI From a Coil and Tube Leak From a Liquid Release With Maximum Source Terms

Unit Operation	Frequency (per year)	Dose to MOI (EDE, mrem)	Risk (mrem/yr)
Dissolving	9.4E-05	1.1E+02	1.0E-02
Head End	6.1E-05	1.1E+02	6.7E-03
1st Cycle	7.7E-06	1.1E+02	8.5E-04
HAW	8.8E-05	1.9E+02	1.7E-02
2nd Np Cycle	7.2E-05	1.1E+03	7.9E-02
2nd U Cycle	7.7E-06	7.0E+02	5.4E-03
LAW	1.6E-04	1.1E+03	1.8E-01
Np Storage	N/A	N/A	N/A
Pu Storage	N/A	N/A	N/A
FWR	7.7E-06	4.8E+02	3.7E-03

Table A.1.6–10B Dose and Risk to the OEP From a Coil and Tube Leak From a Liquid Release With Nominal Source Terms

Unit Operation	Frequency (per year)	Dose to OEP (EDE, mrem)	Risk (mrem/yr)
There is no impact to the onsite worker from a liquid release to the area surface waters.			

Figure A.1-1 Risk to Maximum Offsite Individual (MOI) from H-Canyon Maximum Accidents

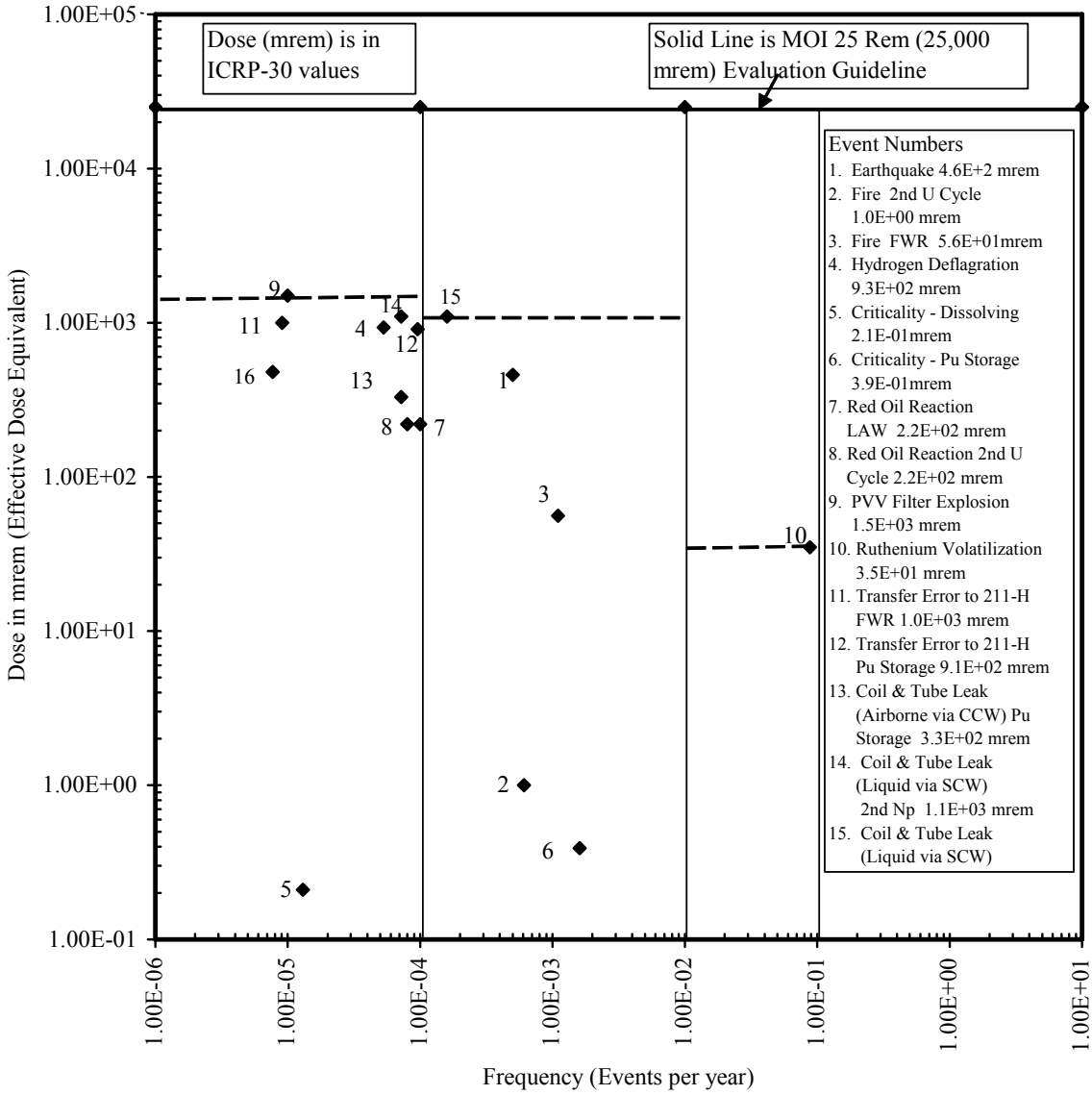

Figure A.1-2 Risk to the Maximum Collocated Worker (OEP) from H-Canyon Accidents

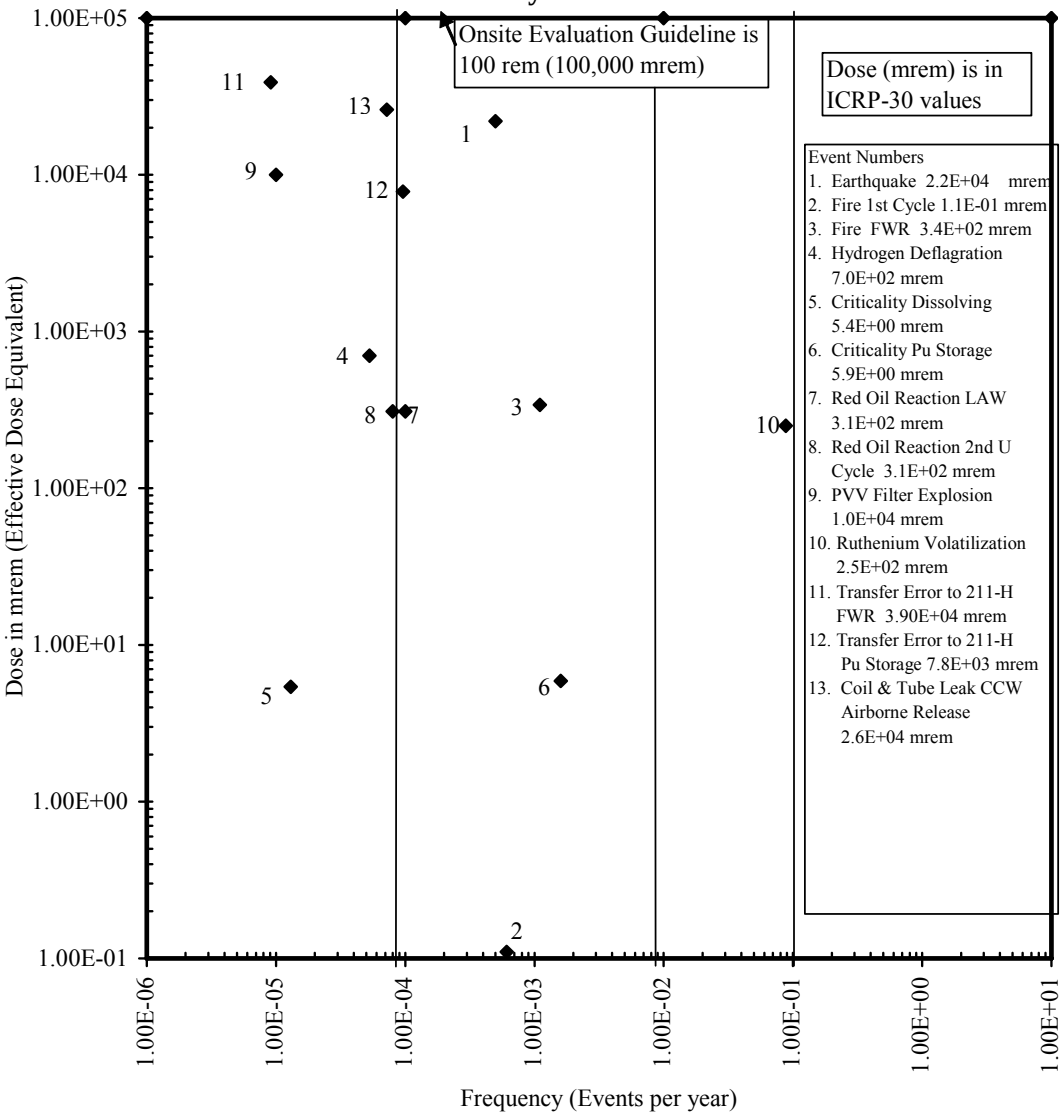

A.1.7 REFERENCES

1. Safety Analysis – 200 Area Savannah River Plant H–Canyon Operations. DPSTA–200–10 SUPP 5, E. I. DuPont du Nemours Company, Aiken, SC, February 1986.

2. F & H Area Technical Staff Training Program Description. Attachment 3a, NMSPTPD01X0104, Rev 4, Westinghouse Savannah River Company, Aiken, SC, November 11, 1997.

3. Chandler, M.C. Revised Source Terms for H–Canyon. NMS–ETS–98–0089, Westinghouse Savannah River Company, Aiken, SC, November 5, 1999.

4. Hamby, D.M. Environmental Dose Assessment Manual (U). WSRC–IM–91–1, December 1991.

5. Chanin, I., Sprung, J.L., Ritchie, L.T., and Jow, H-N. MELCOR Accident Consequence Code System (MACCS), Volume 1, User's Guide. NUREG/CR–4691 (SAND86–1562), Sandia National Laboratory, Albuquerque, NM, February 1990.

6. Jow, H-N., Sprung, J.L., Rollistin, J.A., Ritchie, L.T., and Chanin, D.I. MELCOR Accident Consequence Code System (MACCS), Volume 2, Model Description. NUREG/CR–4691 (SAND86–1562), Sandia National Laboratory, Albuquerque, NM, February 1990.

7. Rollistin, A., Chanin, D.I., and Jow, H-N. MELCOR Accident Consequence Code System (MACCS), Volume 3, Programmer's Reference Manual. NUREG/CR–4691 (SAND86–1562), Sandia National Laboratory, Albuquerque, NM, February 1990.

8. Chanin, I., Rollstin, J.A., Foster, J., Miller, L. MACCS Version 1.5.11.1: A Maintenance Release of the Code. NUCREG–CR–6059 (SAND92–2146), Sandia National Laboratory, Albuquerque, NM, August 1993.

9. East, J.M. H–Canyon Radiological Source Term and Consequence Analysis. S–CLC–H–00700, Rev. 0, Westinghouse Savannah River Company, Aiken, SC, April 1999.

10. Lux, C.R. Frequency of a Resin Fire in H–Canyon FWR (U). S–CLC–H–00463, Rev. 0, Westinghouse Savannah River Company, Aiken, SC, 1996

11. Browne, E.V. Frequency Determination for a Hydrogen Explosion in an H–Canyon Tank (U). S–CLC–F–00165, Rev. 0, Westinghouse Savannah River Company, Aiken, SC, July 1994.

12. Lux, C.R. Fault Tree Analysis of Red Oil Reactions in the H–Canyon Evaporators (U). S–CLC–H–00227, Rev. 2, Westinghouse Savannah River Company, Aiken, SC, December 2005.

13. Morton, G.R. Frequency Estimates of Maximum Transfer Error Amounts in H–Canyon (U). S–CLC–H–00211, Rev 0, Westinghouse Savannah River Company, Aiken, SC, March 1995.

14. Sarrack, A.G. Contamination of H–Canyon Segregated Water by Cooling Coil Leaks (U). S–CLC–H–00332, Rev 0, Westinghouse Savannah River Company, Aiken, SC, 1995.

15. Lux, C.R. Frequency of Radiological Release Due to H–Canyon Highly Contaminated Circulated Cooling Water (U). S–CLC–H–00704, Rev 1, Westinghouse Savannah River Company, Aiken, SC, May 1999.

16. Structural Integrity of F and H–Canyon Cooling Coils in Process and Storage Tanks. EPD–SSA–94–0227, Westinghouse Savannah River Company, Aiken, SC, August 1994.

17. Sarrack, A.G. and Vail, R.E. Contamination of CTW by Flexible Jumper Transfer Error (U). S–CLC–H–00302, Rev 0, Westinghouse Savannah River Company, Aiken, SC, 1995.

18. Bhatt, J.J. 221–H Canyon Dynamic Interaction Analysis (U). T–CLC–H–00278, Rev. 0. Westinghouse Savannah River Company, Aiken, SC, November 1996.

19. Kennedy, W.N., Hoskins, R.S. and B Sumodobila, N. Review of F–Canyon Process Vessels (U). EPD–SE–0023:63, Westinghouse Savannah River Company, Aiken, SC, February 18, 1993.

20. Airborne Release Fractions/Rates and Respirable Fractions for Nonreactor Nuclear Facilities, Volume 1. DOE–HDBK–3010–94, U. S. Department of Energy, Washington, DC, October 1994.

21. Fisk, P.L. Consequences of a Postulated Hydrogen Deflagration in F–Canyon Tank 17.1 (U). SRT–SEP–94–0017, Westinghouse Savannah River Company, Aiken, SC, January 31, 1994.

22. Piping Analysis (U). T–CLC–F–00008, Rev. 0. Westinghouse Savannah River Company, Aiken, SC, March 1998.

23. Salyer, W.D. Pressure Response of the F and H–Canyon Hot Canyons to a Solvent Pool Fire. S–CLC–G–00256, Westinghouse Savannah River Company, Aiken, SC, December 2001.

24. Hallman, D. F. Evaluation of Accountable Sealed Sources in H-Canyon. S-CLC-H-01042, Rev. 0, Westinghouse Savannah River Company, Aiken, SC, June 2005.

25. Cappucci, A. J. S-CLC-H-01085, Rev. 0, PI-06-004 Evaluation of Consequences for the Design Basis Earthquake (DBE) (U). Washington Safety Management Solutions, Aiken, SC. October 2006.

26. Dyer, W.G., Campbell, T.G., Extent of Condition for Flammable Gasses in H-Canyon Processes, WSRC-TR-2007-00029, Rev. 0, Washington Savannah River Company, Aiken, SC, January 2007.

27. E. T. Ketusky, Organic Contribution to CLFL in HLW, S-CLC-G-00270, Rev. 4, Westinghouse Savannah River Company, Aiken, SC, October 2002.

28. J. E. Laurinat, Determination of Vapor Pressure for N-Paraffin at 45°C and Its Effect on the Lower Flammabiliy Limit, X-CLC-H-00634, Rev. 0, Washington Savannah River Company, Aiken, SC, January 2007.

H–Canyon
Safety Analysis Report

Safety Analysis
Outside Facilities H–Area SAR Addendum
Addendum 2, Revision 3

February 2005

Outside Facilities H–Area
Accident Analysis (U)

SAVANNAH RIVER SITE
Aiken, SC 29808 • www.srs.gov

PREPARED FOR THE U.S. DEPARTMENT OF ENERGY UNDER CONTRACT NO. DE-AC09-96SR18500

A.2 OUTSIDE FACILITIES H–AREA ACCIDENT ANALYSIS

A.2.1 SUMMARY

This addendum evaluates the consequences of applicable Safety Analysis accidents in the Savannah River Site (SRS) OF–H in support of planned operations to support stabilization activities. These proposed stabilization activities are in response to Defense Nuclear Facilities Safety Board (DNFSB) Recommendations 94–1 and 2000–1. The construction, start up, and operation of a blending and shipping process to provide an LEU solution to TVA for their use to prepare nuclear reactor fuel are also supported in this addendum.

Seven accidents in six broad categories are analyzed in this addendum based on previous accident analyses. Two distinct pathways to the various receptors are considered in the consequence analysis. These two pathways are an airborne release and a liquid release to the surface water. In general, for all except the fire and criticality scenarios, each accident creates a resuspension source term, and further, if the diked storage pad is unable to contain the liquid spill, a runoff to surface water occurs. In the hydrogen deflagration scenario, an additional aerosol term has been assessed. The solvent fire scenario results in only an airborne exposure pathway. For the criticality scenario, direct radiation dose to the worker at 100 m, as well as the dose due to the airborne release of radioactive material, has been assessed.

OF–H normally stores and handles enriched UN solutions. The enriched UN solution could have a maximum concentration of 11.5 g/l U–235. In this addendum, a single solution is used to represent the possible maximum consequence from the blending and storage operations. The analyzed source term is a maximum source term that bounds the accident consequences involving UN solution over the range of enrichment from DU (approximately 0.2 wt% U–235) to HEU (up to 85 wt% U-235). Because of process changes in F–Canyon, a Pu-239 concentration of 800 Pu parts per billion (ppb) parts U has been conservatively assumed (Ref. 2).

When the original accident analysis and this addendum were completed, plans were to blend the HEU solution with a Depleted Uranium (DU) solution stored in the Hanford Containers and the HM–Trailers. This blend of the HEU and DU solutions was to be the solution shipped to the Tennessee Valley Authority (TVA) to use to make fuel for the TVA power reactors. After the original analysis was completed, it was determined that the DU could not be used as a blend material to make the LEU and Natural Uranium (NU) is being delivered to the site to blend with the HEU to form the LEU. The DU stored in the Hanford Containers and HM–Trailers in Outside Facilities–H Area (OF–H) had been returned to F–Area in 2003 for ultimate disposition. However, to support closure activities in F-Area, DU may be relocated back to OF-H for ultimate disposition. The DU can be stored in Hanford Containers, HM-Trailers, or any other similar container (e.g., Consani Containers). The source term inventory of DU that was credited for storage of DU in OF-H was not removed from the safety basis when the Hanford Containers and HM-Trailers were returned to F-Area in 2003. Therefore, OF-H may continue to receive and store DU as bounded by the original safety basis analyses. For all A–Line accidents analyzed in this addendum, a blended LEU solution using the DU and HEU as the blending materials is used as the Material at Risk. This “off specification” blended material provides a source term that

bounds all of the materials to be stored, used, or blended in A–Line. This is because of the plutonium content in the DU. The use of the DU/HEU isotopic concentration for the HEU Blend Down Project source term provides a reasonably conservative bounding source term that encompasses any existing or projected operations for OF–H. Note that the blended source term is used only for the DU Storage, the NU Storage, the HEU Storage, and the blended material storage. For other OF–H processes (e.g., Segregated Solvent or ARU) reported in this addendum, the isotopic source term appropriate for these processes is used in the accident analysis.

In general, frequencies from the old OF–H SAR (Ref. 1) with updated Material At Risk (MAR) inventory data are used to analyze accidental releases of radioactive material in OF–H. The MAR bounds the LEU blended HEU/NU source terms by assuming a HEU/DU blended product. Shipping is defined to mean any operations related to loading or unloading HM–trailers, Hanford Containers, sample return trailers, NU Tanker, or other approved shipping containers to move the NU/DU, the blended LEU material, and the sample returns into and out of H–Area. Note throughout this addendum, the term “Hanford Containers” is defined to include the Hanford Containers, the HM–trailers and any similar containers (e.g., Consani Containers). The Hanford Containers, the Consani Containers, and the HM–trailers are shipping vessels of approximately 17,500 liters (l) capacity with other similar physical characteristics. Henceforth in Addendum 2, the term "Hanford Containers" will be used for simplicity and any requirements that apply to the Hanford Containers also apply to HM–Trailers and any similar containers (e.g., Consani Containers) that will be used for DU storage at OF-H.

In 2004, H-Canyon began to process laboratory effluent. Laboratory sample returns from CLAB and SRNL are being transferred to H–Canyon because F–Canyon sample return processing operations have been shutdown. The sample returns are delivered to the 221–H Warm Canyon Truck Well Airlock in trailers. Applicable accident scenarios involving the processing of the sample returns have been evaluated.

Packaged Waste activities are analyzed in Appendix 3 of this SAR.

Table A.2.1–1 summarizes the consequence and frequency analysis results for postulated events and risks associated with OF–H operation, including accidents involving the sample return trailers. The analysis demonstrates that depleted and blended uranium solution storage, process and shipping operations, and other OF–H operations pose no undue risk to the public, the facility or onsite workers and the environment. Table A.2.1-1 includes values for both the Maximally Exposed Offsite Individual (MOI) and the Onsite Occupationally Exposed Person (OEP) at 100 meters (m). The accidents in this Addendum were plotted on a risk acceptance graph (see Figures A.2–1 and A.2–2) to demonstrate that operation of the facility falls beneath the accepted risk values. Doses calculated in this Addendum use International Commission on Radiological Protection (ICRP) – 30 based dose factors. Additionally, to update the analysis to the latest available information, the chemical consequences related to storing, transferring, and processing the UN solutions are included in the analyses.

Only bounding accident scenarios were selected in each frequency category and analyzed with new source terms from the OF–H HEU Blending Process. Accident scenarios that are not applicable to the blending and storage process or that are clearly bounded in source terms or

consequences by the analyzed events have not been analyzed. Some of these accident scenarios include leaks, spills, transfer errors (all equivalent to overflows), ruthenium volatilization, uncontrolled reactions (e.g., red oil explosion), overconcentration, and corrosion.

Table A.2.1–1 Summary Table of Bounding Risks from H–Area Outside Facilities Unit Processes

ACCIDENT	CONSEQUENCE (mrem)	FREQUENCY (/yr)	RISK (mrem/yr)	RECEPTOR
PC–3 (MM VIII)* Earthquake	3.9E+02 7.5E+02	5.0E-04 5.0E-04	2.0E-01 3.8E-01	MOI OEP 100 Meters
F–3 Tornado	3.5E+02 4.4E+02	2.7E-05 2.7E-05	9.5E-03 1.2E-02	MOI OEP 100 Meters
External Impact (Hanford Container)	3.6E+00 1.1E+01	3.7E-02 3.7E-02	1.3E-01 4.0E-01	MOI OEP 100 Meters
External Impact (EUS Tank)	3.9E+01 1.0E+02	2.6E-03 2.6E-03	1.0E-01 2.6E-01	MOI OEP 100 Meters
Overflow (EUS Tank)	3.9E+01 1.0E+02	7.0E-02 7.0E-02	2.7E+00 7.0E+00	MOI OEP 100 Meters
Hydrogen Deflagration	1.7E+02 9.4E+03	9.4E-06 9.4E-06	1.6E-03 8.8E-02	MOI OEP 100 Meters
A–Line Fire (large fire)	2.0E+02 2.1E+04	6.1E-05 6.1E-05	1.2E-02 1.2E+00	MOI OEP 100 Meters
Solvent Fire	5.2E+00 5.2E+02	6.1E-04 6.1E-04	3.2E-03 3.2E-01	MOI OEP 100 Meters
Criticality	3.9E-01 5.2E+04	6.6E-05 6.6E-05	2.6E-05 3.4E+00	MOI OEP 100 Meters
OF–H Sample Return Trailer Fire**	1.7E+01 7.6E+03	6.1E-04 6.1E-04	1.0E-02 4.6E+00	MOI OEP 100 Meters
Overflow Sample Return Trailer	5.8E+01 1.2E+03	7.0E-02 7.0E-02	4.1E+00 8.4E+01	MOI OEP 100 Meters
General Impact Sample Return Trailer	1.7E+01 7.6E+03	2.6E-03 2.6E-03	4.4E-02 2.0E+01	MOI OEP 100 Meters

* Performance Category – 3 (Modified Mercalli Index VIII [see page A.2-17])

** The Sample Return Trailer Fire includes the transport truck combustible materials which increase the intensity and/or duration of the fire.

A.2.2 FACILITY DESCRIPTION AND ACCIDENT INITIATORS

A.2.2.1 GENERAL PROCESS DESCRIPTION INFORMATION

Low Enriched Uranium Blending Operations

DOE has an agreement with TVA to blend the Highly Enriched Uranium (HEU) solutions, typically about 70% U–235, and blend it to an enrichment that can be used to make commercial light water reactor fuel for use in the TVA power reactors. The HEU is blended to a nominal 4.95 wt% U–235 enrichment called Low Enriched Uranium (LEU). This section gives a generic description of the LEU blending process in OF–H.

HEU solution is produced in H–Canyon and transferred to Tanks B3–1 or B3–2 where it is sampled to determine if it meets the LEU blending specifications. If it does not meet the blend grade specifications, it is transferred to the EUS Tank for storage. Blend grade HEU solution is transferred from Tanks B3–1 or B3–2 to the E4–2 Tank for storage. From the E4–2 Tank the HEU solution will be transferred to Tank F1–5 for blending with NU to form the LEU solution.

NU is received from an offsite vendor in a nominal 3,500–gallon capacity tanker truck. The NU solution (uranyl nitrate dissolved in nitric acid) is pumped to either Tank E3–1 or E3–2 for storage. From E3–1 or E3–2, the NU solution is pumped to Tank F1–5 to be blended with the HEU solution to form the final 4.95 +0.04 -0.05 weight percent U–235 LEU solution.

From Tank F1–5, the LEU solution is pumped to Tank E1–1 for storage and transfer to Tank E1–2. Excess LEU solution is pumped to Tanks F1–3 or F1–4 for temporary storage. The LEU solution in Tanks F1-3 or F1–4 is subsequently pumped to Tank E1–1 for storage and transfer to the LEU Measuring Tank, Tank E1–2.

A nominal 230 gallons of LEU solution is pumped from Tank E1–1 to Tank E1–2. The LEU Measuring Tank is geometrically favorable for the U–235 enrichment in the LEU solution. From Tank E1–2, the LEU solution is gravity fed directly to the LEU shipping containers, NRC and DOT approved Type B shipping containers, commonly called ECO–Pack Containers, mounted on an over–the–road trailer in the LEU Loading Station. Each LEU shipping trailer contains nine of the Type B LEU shipping containers. From the LEU Loading Station the trailer with the filled containers can be shipped directly to the TVA or moved to a temporary staging area until it is transferred to the TVA. Several of the filled LEU Shipping Trailers can be staged in H–Area simultaneously.

The enriched UN solution currently stored in the OF–H Enriched Uranium Storage (EUS) Tank, will be transferred to Tank 18.1 inside H–Canyon for recycling to remove impurities so that it will meet the TVA specifications for blend grade HEU. The refreshing operations occur inside H–Canyon and are outside the analysis considered in this addendum. The EUS Tank can also receive and store off specification blended LEU if necessary.

Lab Sample Returns

In 2004, H-Canyon began to process laboratory effluent. Laboratory sample returns from CLAB and SRNL, are currently being transferred to H–Canyon because F–Canyon processing operations are shutdown. The sample returns are delivered to the 221–H Warm Canyon Truck Well Airlock in trailers. The sample returns are processed in the canyon evaporators to prepare the solution for disposition. The H–Canyon accident analysis (SAR Addendum 1) adequately covers the accidents postulated for this material inside the canyon. However, the material will be transported into H–Area outside the canyon structure. Therefore, the analysis in this addendum analyzes those accidents appropriate for moving and staging the lab sample return trailers outside the canyon structure. The movement and staging of the trailers are similar to the OF–H chemical and radioactive material receipt and shipping operations, therefore, the accident analysis for receipt of the lab waste samples is included in this addendum.

Two types of sample return trailers can be used depending upon the point of origination. The LR–56 Trailer will be used to transport CLAB returns in approximately 3,785–liter batches. The High Activity Waste Transport Trailer (HAWTT), originating at SRNL, will contain sample return batches averaging around 11,350 l. The Warm Canyon Truck Well Airlock has been modified to accommodate only one LR-56 or HAWTT trailer at a time. Since the trailers are different configurations, a flexible hose is used in the airlock to pump sample returns from the trailers. The pumped sample returns are transferred to a jacketed 304L stainless steel pipeline. The transfer pipeline, which includes an unused Circulated Cooling Water line, is connected to the Sample Return Receipt Tank 10.5, inside H–Canyon.

A.2.2.2 OUTSIDE FACILITIES H–AREA BLENDED URANIUM PROCESS AND EQUIPMENT DESCRIPTION

See SAR Section 2.13 for a generic description of the OF–H process areas. A more detailed description of the OF–H process areas and tanks is found in Reference 1. The System Design Description provides a detailed description of the HEU Blending Process (Ref. 3). This addendum will address only those process areas for which a potential accident involving the release of radioactive material or hazardous chemicals can exceed the WSRC Evaluation Guidelines (EG) for the offsite public or the onsite worker at 100 meters. The hazards associated with the chemical storage and handling activities are considered common chemical industrial hazards and are not analyzed in the SAR. In those cases where there is an accident analyzed or controls implemented by the SAR, they are usually to provide protection to the facility worker rather than for the offsite public or the onsite 100–meter worker.

Although this addendum primarily addresses blending the NU and HEU in A–Line to form the LEU for TVA, the source term in this accident analysis bounds the DU and will bound any product from blending of the DU. Therefore, this Addendum specifically includes and allows blending of the NU/HEU and/or the DU with either NU/HEU or other DU solutions or chemicals to support other activities or missions.

Equipment used in the OF–H process is discussed in the old SAR (Ref. 1). DU solution has been transferred from F–Area A–Line to OF–H. Hanford Containers are used to store or transfer the

DU or any blended product using the DU. The general dimensions of the Hanford Container frames are 8' x 8.5' x 20'. Each Hanford Container can contain a maximum of 17,500 liters of depleted UN solution.

As the largest tank in OF–H, the EUS Tank at 605,653 liters (value used in accident analysis, which corresponds to 160,000 gallons) is typically used in the accident analysis for all postulated accidents except a fire and the natural phenomena events. SAR Figure 10–13 shows the A–Line tank locations in relation to H–Canyon and other OF–H processes and the Hanford Container location.

The design of the Hanford Containers has been reviewed and certified per the American Society of Mechanical Engineers (ASME) Pressure Vessel Code (Ref. 4). The Hanford Containers will be stored on a partially diked, concrete pad located north and adjacent to the H–Area Segregated Solvent facilities. Operations involving the Hanford Containers include moving the containers and trailers, transferring DU or blended product solution into or out of the Hanford Containers to or from OF–H tanks or other storage tanks. Routine surveillance and maintenance include purging or periodic venting of the Hanford Containers to prevent a hydrogen deflagration. SAR Figure 10–13 shows the location of the Hanford Containers relative to H–Canyon, other OF–H processes, and the A–Line Tanks. The Hanford Containers are stored at the north end of the OF–H area while the EUS and A–Line tanks are at the south end. The B3 Basin and Tanks B3–1 and B3–2 are adjacent to the canyon near the north end of Canyon Section 14. The B3 Basin Tanks are physically separated from OF–H and the A–Line Tanks. However, since the B3 Basin Tanks are used to transfer HEU solution, for the purposes of this accident analysis, the B3 Basin Tanks are considered to be a part of A–Line.

Two types of sample return trailers are proposed for use depending upon point of origination. The LR–56 Trailer will be used to transport CLAB returns in approximately 3,785–liter batches. The HAWTT, originating at SRNL, will contain sample return batches averaging around 11,350 liters. The pedigree and maintenance (includes periodic surveillance) associated with the sample return trailers are contained in the CLAB and SRNL safety documentation, respectively.

The Segregated Solvent Tanks in OF–H contain limited quantities of radioisotopes transferred from the solvent extraction processes in the canyons. Because the solvent is flammable, a fire involving these tanks is included in the accident analysis. See SAR Section 2.13 and Reference 1 for additional details on the Segregated Solvent process.

A.2.2.2.1 Accident Initiators

Outside facilities process operations are discussed in the SAR and Reference 1. The accidents included in the OF–H SAR were reviewed to determine the bounding accidents in each frequency category applicable to blending, storage, and shipping of the uranium solutions and the effect of the increased radiological material inventory which results from the blending operations. No new chemical hazards were found to be introduced by the storage and shipping activities. However, to update the analysis, the chemical consequences associated with the uranium stored and processed in OF–H will be included in this accident analysis. Bounding

accidents evaluated that result in a radioactive material or hazardous chemical (e.g., uranium) release include the following:

- Earthquake (Design Basis Earthquake [DBE])
- Tornado (Design Basis Tornado [DBT])
- Loss of confinement (includes overflow, transfer error, spills, leaks)
- Hydrogen Deflagration (bounds other uncontrolled reaction events)
- External Impact (includes a vehicle crash and a dropped crane load impact)
- Fire (includes wildland fire, zone fire, and large gasoline fire in A–Line and fire in the Segregated Solvent Area)
- Criticality.

Until recently, all the HEU solution was stored in the EUS Tank. Based on the tank design and the controls in place to ensure that the concentration was below the always safe concentration limit, it had been judged that a criticality was Beyond Extremely Unlikely (BEU) in the EUS Tank. However, now that the solution is being transferred to other A–Line Tanks, the potential for a criticality must be reviewed. During this review, it was determined that a leak of process solution into the A–Line sumps was a credible mechanism for a criticality event. Previously, as long as the HEU solution was in one tank, the criticality frequency was BEU. A very small undetectable leak from a process pipe or pump during the transfer could lead to an accumulation of fissile material in the sump that could exceed the criticality safety limits resulting in a criticality in the sumps. Since the HEU solution can now be transferred between the A–Line tanks and the A–Line and the Canyon, the criticality accident must be analyzed.

Similarly, the Segregated Solvent Storage area receives contaminated solutions from the Canyon solvent extraction processes. For operations involving the Solvent Storage process, the potential for a fire must be analyzed to determine the accident consequences based on the latest methodology for the consequence analysis. The Segregated Solvent fire is bounded by the consequences for the blending and storage operations for the blended UN solution. Additionally, Appendix H of the H-Canyon Preliminary Hazards Analysis (PHA) (Ref. 5) for the HEU Project identified two different fires that could impact the A–Line Tanks and cause a hazardous chemical or radioactive material release from the A–Line Tanks. These fires were a “small” zone fire that typically would affect only one or two tanks and a much larger fire involving the release of 10,000 gallons of gasoline from a tanker truck that ignites and impinges on the A–Line tanks. Additionally, a helicopter could crash into the A–Line tanks with a subsequent fire. The helicopter crash and fire and the zone fires are bounded by the much larger fire from the 10,000 gallons of gasoline. Therefore, only the large gasoline fire will be considered in the remainder of this analysis.

A.2.3 ANALYSIS METHODOLOGY

A.2.3.1 PROCESS SOURCE TERMS

This addendum evaluates the consequences of applicable OF–H accidents using source terms for the blended product based on blending the DU solution with the HEU solution. This blended product source term has been shown to bound the source term for the unblended HEU, the NU, and the blended NU/HEU product to be shipped to TVA. The source is based on a limit of 11.5 g/l U–235 in the solution. The blended uranium product solution was assessed assuming an isotopic composition of 2.3% U–235. The 2.3% U–235 was assumed to be concentrated to a value of 11.5 g/l with all the other isotopes increased by the same factor (ratio) used to concentrate the 2.3% U–235 to 11.5 g/l. This resulted in a blended product of approximately 500 g/l total U. Actual operations will result in a blended UN product solution of approximately 4.95% U–235 at approximately 125 g/l total U. The NU solution to be received will be approximately 400 g/l total U, while the HEU will have a maximum concentration of approximately 11.5 g/l total U. The 2.3% isotopic composition at 11.5 g/l U-235 per liter bounds all other source term configurations (Ref. 6). The blended UN product solution also includes a Pu–239 component at 800 parts Pu per billion parts U by weight. All the A–Line tanks, including the EUS Tank, are assumed to contain the blended product at 500 g/l total U. Using this blended source term in the accident analysis gives bounding and reasonably conservative consequences for all postulated accidents. All the analyzed accidents except the Segregated Solvent fire and criticality use this source term.

The Segregated Solvent fire source terms are based on the maximum activity limits placed on the Segregated Solvent transferred from the canyon to the Segregated Solvent Tanks. The source term used in the fire consequence calculations for the A–Line Tanks is based on the blended source term described above.

The radionuclide isotopic composition and source terms for the OF–H blending process are listed in Table A.2.3–1A. OF–H normally stores and handles enriched UN solution. The enriched UN feed solution could have a maximum concentration of 11.5 grams U–235 per liter. The DU solution produced in F–Area A–Line has a maximum concentration of 500 g/l total U. For assessment purposes in single tank scenarios, the largest A-Line tank, specifically the EUS Tank, was assumed to be completely full of the blended solution described above.

For the large fire all the A–Line Tanks, except B3–1 and B3–2, were included in the fire consequence analysis. Tanks B3–1 and B3–2 were not considered to be involved in the large fire because of their physical separation distance (approximately 100 meters) from the A–Line Tanks. The consequences from a small fire involving the B3 Basin tanks are bounded by the consequences of the large A–Line fire simply because of the amount of radioactive solution in each location.

For the natural phenomena events, all A–Line Tanks, Hanford Containers, and sample return trailers are assumed to be involved in the event.

Table A.2.3–1A Maximum Source Term Isotopic Distributions for H–Area Outside Facilities Depleted Uranium Storage

OF–H Process Solution	Blended Product Solution	Blended Product Solution
Radioisotope Concentration or Mass	11.5 g/l U-235	
Nuclide	Weight Fraction	Activity Fraction
U–234	2.09E-03	9.38E-01
U–235	2.28E-02	3.54E-03
U–236	6.85E-03	3.18E-02
U–238	9.68E-01	2.33E-02
Pu–239*	8.00E-07	3.56E-03

*Note: Pu-239 is assumed to be present at 800 ppb by weight of U in the DU Storage and Blended U Product Solutions.

U–232 Content of the EUS Tank

A New Information was developed against the OF–H accident analysis based on laboratory sample analysis that determined U–232 was present in the HEU solution stored in the EUS Tank. A calculation (Ref. 20) showed that the accident consequences involving the EUS Tank with the U–232 included as a source term would increase approximately 2%. Some of the INEEL material shipped to SRS that will be dissolved in HB–Line and stored in the EUS Tank contains trace quantities of U–232 also. The U–232 is a daughter product of the alpha decay of Pu–236 and the amount of the U–232 is not expected to increase because of the very short half–life of Pu–236. A scoping calculation shows that the U–232 mass in the EUS Tank is about 6.3E-01 gm with about 1.4E+01 Ci. The INEEL material, based on SRS laboratory analysis, contains about 7.5E-03 gm or 1.66E-01 Ci U–232. The selected U–232 content number (i.e., 2.51E-08 gm U–232/gm U) is the larger of the two laboratory sample analyses. The expected total U–232 that could be in the EUS Tank is approximately 6.5E-01 gm or 1.4E+01 Ci. This U–232 will conservatively increase the calculated accident consequences associated with the EUS Tank by about 3%. Rather than completing a new calculation to specifically include the U–232 in the isotopic mixture, the EUS Tank consequences will be increased by 3%. This is a conservative approach since the existing U–232 is concentrated in the EUS Tank and the EUS Tank is the largest tank with the greatest amount of Material at Risk for a single tank event. By increasing the consequences by 3%, the assumptions related to the MAR, the airborne and respirable fractions and other assumptions in the accident analysis calculations are maintained.

Sample Return Trailers

The radionuclide isotopic composition and source terms for the sample return trailers are listed in Table A.2.3–1B (Ref. 18).

Table A.2.3–1B Maximum Source Term Isotopic Distributions for Sample Return Trailers

Nuclide	Weight Fraction	Activity Fraction
Pu-238	5.08E-02	6.146E-01
Pu-239	8.66E-01	3.80E-02
Pu-240	7.60E-02	1.22E-02
Pu-241	4.60E-03	3.352E-01
Pu-242	2.60E-03	—

Table A.2.3–2 lists the source terms in curies for the isotopes of interest in the Segregated Solvent Storage Tanks. The isotopic content is based on the maximum limits for radioactive contamination in the solvent sent to the Segregated Solvent Tanks from the canyon solvent extraction processes and the radionuclides identified in Reference 1 that were applicable to the Segregated Solvent process. Reference 6 is a previous consequence analysis calculation for the OF–H accidents and contains details about the development of the radionuclides listed in Table A.2.3–2. References 7, 8, and 9 are the consequence analyses that support this addendum and explain how the source terms were used in the accident analysis. The 1st Cycle Segregated Solvent has the highest activity and gives the largest dose in each accident. For completeness, the doses for all three Segregated Solvent Tanks are reported in this addendum.

Table A.2.3–2 Maximum Source Term Isotopic Distributions for H–Area Outside Facilities Segregated Solvent Storage

Radionuclide	Segregated Solvent 1st Cycle (Ci)	Segregated Solvent 2nd Np Cycle (Ci)	Segregated Solvent 2nd U Cycle (Ci)
Nb-95	1.04E+02	9.50E+01	8.35E+00
Zr-95	4.31E+02	4.54E+01	3.48E+01
Ru-103	5.73E+02		4.66E+01
Ru-106	3.45E+03		2.79E+02
Pa–233		6.94E+01	

Waste Containers Temporarily Placed in Storage at OF-H

A representative sample of the potential dose contribution per radionuclide isotopic composition and total inventory stored in waste containers at OF-H is shown in Table A.2.3–3 (Ref. 22). With Pu-238 representing over 99.99% of the dose potential of the total inventory of the waste containers (includes BB69 and 6 LSBs staged for repackaging), only the Pu-238 inventory needs to be carried forward in the accident and consequence analysis for the scenarios considered.

Table A.2.3–3 Isotopic Inventory Dose Contribution for Waste Containers

Nuclide	Total Inventory (g)	Dose Potential Contribution (%)
Am-241	3.948E-03	0.01
Np-237	1.27E-01	<0.01
Pu-238*	1.55E+01	99.99
Pu-241	9.98E-04	<0.01
U-235	3.02E+02	<0.01
U-238	1.26E+03	<0.01

* The Pu-238 represents Pu-238 either identified as Pu-238 or as unidentified plutonium in waste containers.

A.2.3.2 SOURCE TERM INPUT DATA AND ASSUMPTIONS

The mechanisms for release of radionuclides in the postulated accident types given in the Introduction (see Section 1.) of this document include the following:

1. Free-fall spill of the solution during all of the postulated events except for the solvent fire and criticality events,
2. Thermal stress of an organic combustible liquid during the postulated solvent fire event,
3. Entrainment and resuspension during a clean-up phase which follows all initial postulated events except the solvent fire and criticality events,
4. Energetic release of material due to a hydrogen deflagration,
5. Thermal stress on the aqueous solutions stored in the A–Line Tanks or trailers from the heat of a large gasoline fire, and
6. Thermal stress on LAB sample return trailers.

The Airborne Release Fractions (ARFs) and Respirable Fractions (RFs) associated with the listed release mechanisms are given in References 7, 8, and 9 and are summarized in Table A.2.3–3 for both the bounding case and the median case. The bounding case will be used in the analysis of

the MOI while the median case will be used in the analysis of the onsite OEP. The cited references explain how the ARF/RF values are selected and used in the analyses.

The spill height for all releases is assumed to be 10 feet (3 meters) or less. The postulated entrainment and resuspension source terms are based on a clean-up period that is assumed to last for 48 hours. Because the material used in the analysis was assumed to have a concentration of 500 g/l total U, the airborne release rates, respirable fractions, and resuspension rates for a solution with a density of greater than 1.2 g/cc were used for the onsite receptor. For the offsite receptor, a bounding ARF of 2.0E-04 was used.

The hydrogen deflagration will not damage the tank, however, it will cause hazardous chemicals and radioactive materials to be expelled from the tank.

The criticality event is assumed to have 1.0E+19 fissions. The radionuclide yield was calculated using ORIGEN (Ref. 7). This analysis used the bounding results at 0.25 minutes following the criticality. The ARFs for the criticality event were assigned as follows: 1.0E+00 for noble gases, 2.5E-01 for halogens, and 5.0E-04 for all other radionuclides. Applying the ARF of 2.5E-01 to all halogens is conservative since DOE only specifies it for volatile radioiodines. The RF is taken to be 1.0E+00.

For the criticality event, all material is assumed to be available for release into the atmosphere. For the tornado, earthquake, overflow, and crash events, all the material is assumed to be available for the initial spill of material. For all events except the DBE/DBT, all of the released material is assumed to be available for an evaporative (resuspension) source term. For the DBE/DBT, only half of the material is acted upon for release into the atmosphere via liquid pool evaporation and resuspension. The other half of the material is assumed to be released into a storm sewer and will eventually reach the Savannah River for potential uptake by the population downstream.

Table A.2.3–3 Airborne Release Fractions and Respirable Fractions Associated with Each Potential Release Mechanism

Accident Scenario	**Parameter**					
	MOI (maximum values)				**OEP (median values)**	
	Form	**ARF/ARR**	**RF**	**ARF Stress**	**ARF/ARR**	**RF**
External Impact	PL	2.0E-04	0.5	Spill	1.0E-6	0.3
	R	4.0E-06	1.0	Entrainment	4.0E-07	1
Hydrogen deflagration (EUS Tank)	PL	7.0E-4	1.0	Detonation	5.0E-5	1.0
	R	4.0E-06	1.0	Entrainment Deflagration	4.0E-7	1.0
Loss of confinement	PL	2.0E-04	0.5	Spill	1.0E-06	0.3
	R	4.0E-06	1.0	Entrainment	4.0E-07	1.0
Earthquake	PL	2.0E-04	0.5	Spill	1.0E-06	0.3
	R	4.0E-06	1.0	Entrainment	4.0E-07	1.0
Tornado	PL	2.0E-04	0.5	Spill	1.0E-06	0.3
	R	4.0E-06	1.0	Entrainment	4.0E-07	1.0
Fire *	Boiling	1.2E-03 *	1.0	Boiling Liquid	6.0E-04 *	1.0
Fire EUS Tank *	PL	2.0E-05	1.0	Spill	1.0E-06	0.3
	R	1.9E-04	1.0	Entrainment	3.0E-07	1.0
	Boiling	1.5E-04	1.0	Boiling Liquid	3.0E-05	1.0

* The ARF is based on the volume of liquid that is boiled off in a particular tank or trailer. Since the tanks and trailers are various sizes, the ARF for each tank may be different based on the

amount of liquid boiled off. In this table, the ARF values for the large gasoline tanker fire were chosen because they are the bounding values in the analysis. Specifically, for the tanks in which the tank is not assumed to fail, Tank F1-3 was chosen as a representative value for the larger tanks. In the large gasoline fire, the EUS Tank is assumed to fail (see below for details). Please see Table 8 (small fire) and Table 10 (large fire) of Reference 9 for the ARFs applicable to the individual tanks or Reference 18 for the sample return trailers.

A.2.3.3 IMPACTS OF NEW EVALUATION

Computer codes used in the OF–H SAR were RELEASE, AXAIR and LADTAP II. These codes are no longer available for use in safety analysis, having been replaced by later versions. This Addendum uses the MELCOR Accident Consequence Code System (MACCS) version 1.5.11.1 and LADTAP XL to calculate consequences of radioactive releases.

MACCS version 1.5.11.1 was used to compute Total Effective Dose Equivalent (TEDE) values for airborne emissions of radioactive material. MACCS was developed at Sandia National Laboratory under sponsorship of the U.S. Nuclear Regulatory Commission (NRC) and the U.S. Department of Energy. The MACCS code uses the same Gaussian plume methodology and SRS meteorological data as used by the SRS AXAIR model that has been previously used in OF–H accident consequence calculations. MACCS has several advantages over the AXAIR code, including the ability to analyze a wider range of accident conditions, more realistic treatment of site specific parameters, a larger library of isotopes, and improved computer processing performance. MACCS is the NRC standard assessment methodology and is used throughout the world to make radiological assessments. MACCS calculates exposure to the MOI independent of sector, but at the 95% dose level. In general, MACCS provides more realistic estimates of dose from airborne releases than did previous models. MACCS uses a database for population and meteorology, which has been updated from the one used for the original SAR calculations. The meteorological database is based on 5 one–year periods from 1987-1991. MACCS uses ICRP–30 dose conversion factors. Accidents are evaluated using the release fractions from the DOE–HDBK-3010–94 for all receptors. In the accident analysis for this addendum, MACCS was used to determine the rem/Ci values for each isotope of interest based on the accident release mechanism and the height (e.g., ground level versus top of stack) of the release above the ground. The MACCS rem/Ci values are used in various spreadsheet calculations to determine the amount of material in Curies actually released in the accident and the dose resulting from the airborne release.

The use of the maximum source terms results in larger doses and greater risks than those from accidents analyzed with more realistic or nominal source terms. While doses and risks from maximum source terms result in larger reported values, these accidents are all within the guidance and EGs established by WSRC and DOE for safe operation of the facility as depicted in Figures A.2-1 and A.2-2.

An additional receptor, the onsite worker at 100 meters was added to the consequence calculations. Previously, H-Canyon Documented Safety Analysis (DSA) documents have used an onsite receptor co–located at a distance of 640 m from the release point as the basis for evaluating doses to onsite workers. This document, upon the recommendation of the AB

Steering Committee, uses a receptor distance of 100 m from the release point, or in the case of a stack release, the plume touchdown point if it results in a larger dose. For OF–H, all releases are ground level unfiltered releases and the 100–meter distance from the release point is used in the consequence calculations.

In comparing the dose calculations from F–Area to H–Area for the Pu isotopes of concern, Reference 19 used RADSCREEN. The use of these new versions results in no significant changes in the consequences calculated in this Addendum.

A.2.3.4 INPUT FOR THE MACCS, AND LADTAP XL COMPUTER PROGRAMS

MACCS version 1.5.11.1 is described in detail in References 10 through 13. A detailed description of the LADTAP XL computer program is provided in References 14 and 15. This discussion is limited to the input assumptions for these programs. MACCS was used to calculate the doses associated with accident specific airborne radioactive material releases. MACCS calculates the individual and population radiation doses via inhalation and plume gamma radiation pathways. For this analysis, the MACCS program uses accident specific release times. TEDE values are calculated for the offsite doses using the sector independent 95% dose quantile. TEDE values for the onsite receptor are calculated using the sector independent 50% dose quantile. A table showing the input parameters used for these calculations is provided in Table A.2.3–4. Reference 7 (pages 11 – 18) contains additional detail on the assumptions and inputs for the MACCS program used in this accident analysis. As previously noted, MACCS is now typically used to calculate a specific Dose Conversion Factor (DCF) for each radioisotope of interest. This DCF (rem/Ci released) is used in spreadsheet calculations to determine the final dose to the receptor of interest. The dose is based on calculations that determine the amount (mass or Curies) released to the environment as an airborne respirable particle.

The LADTAP XL program calculates individual and offsite population doses via the aquatic pathways for surface water liquid releases. Specifically, LADTAP XL was used to calculate the consequences of a liquid radioactive material release to Four Mile Creek from spills of radioactive solutions in OF–H. For there to be a liquid release, the protective curb system must be breached, either by mechanical destruction of the curb or by overflowing the capacity of the pad. The parameters and general assumptions that were used in the LADTAP XL program are shown in Table A.2.3–5. For the dose to the MOI receptor, the LADTAP XL methodology conservatively assumes that an entire year's supply of drinking water is taken from the contaminated plume in the river. Under acute accident conditions, it is assumed in this analysis that intervention would limit any individual to drinking no more than a one month supply of river water that is taken from the contaminated plume.

Table A.2.3–4 Parameters and General Assumptions for MACCS

Parameter	Assumption
Receptor Distances	0.1 km or plume touchdown on site, 11.5 km offsite.
Building Wake Dispersion Correction	Not included.
Inventory Scaling Factor (Ci to Bq)	3.7E+10
Source Term	Scenario Specific (based on unit Curie release)
Release Time	Scenario Specific (3 minutes, 30 minutes, 10 hours)
Wet Deposition Correction	Disabled
Dry Deposition Correction (Deposition Velocity)	Enabled (1.0) cm/sec for unfiltered releases
Sensible Heat Correction	Disabled
Surface Roughness Correction (cm)	100 cm
Dispersion Coefficients	Pascal–Gifford
Breathing Rate (cubic meters per second)	3.33E-04
Shielding Allowance	Disabled
Evacuation/Sheltering Allowance	Disabled

Table A.2.3–5 Parameters and General Assumptions for LADTAP XL

Parameter	Assumption
Minimum Monthly Savannah River Flow Rate, (ft^3/sec)	3900
Transit Time from SRS to Savannah River, (hr)	36
Water Consumption, (liters/yr)	730
Fish Consumption, (kg/yr)	0
Other Seafood Consumption, (kg/yr)	0
Shoreline, (hr/yr)	0
Swimming, (hr/yr)	0
Boating, (hr/yr)	0

A.2.3.5 CHEMICAL CONSEQUENCES

Chemical consequences are calculated for the sample returns or uranyl nitrate solutions stored, processed, and transferred in or near A–Line. The chemical consequences are developed simultaneously with the radioactive consequences. The amount of hazardous chemicals released in each accident and available as an inhalation source term is the same as that available as an airborne respirable fraction for a radiological consequence.

The chemical consequences are based on exposure to hazardous chemicals. For all non–fire events, in the chemical exposure calculations, it is assumed that all tanks or trailers, except the EUS Tank, release their entire inventories in 15 minutes. For the fire events, because the

duration of the fire is known, the release is ratioed to determine the amount of material released in 15 minutes. This source term for the 15 minute release is used in the chemical consequence analysis. This is because the Temporary Emergency Exposure Limit (TEEL) for chemical exposure is based on the maximum 15 minute concentration of the amount of the chemical released as an airborne particulate. The use of the TEEL values conservatively approximates DOE approved evaluation guidelines using the Emergency Response Program Guidelines (ERPG) limits.

For the EUS Tank, for most accidents, there will not be a catastrophic event that will destroy or damage the double walled tank sufficiently that the entire tank contents could be released in 15 minutes. An alternate method was used to calculate the amount of material released from the EUS Tank. It was assumed that up to 4,000 liters per minute could be released from the EUS Tank. This results in a maximum release of 180,000 liters of process solution from the EUS Tank. For chemical exposures, the concentrations are controlled by the spill rate, not by the duration of the release.

The TEEL chemical exposure guides are given in terms of mg/m^3 of the chemical being analyzed. For the A–Line processes, there are two chemicals of concern. The first is nitric acid and the second is soluble uranium. Since the TEEL threshold values to each receptor for uranium are less than those for nitric acid, only the uranium values will be reported in this addendum.

A.2.4 ACCIDENT FREQUENCIES

The accidents identified in Section A.2.1 were examined to determine the appropriate frequencies for use in this SAR Addendum. Table A.2.4–1 lists the frequencies for each accident. Following the table is a short discussion of each of these frequencies.

Table A.2.4–1 OF–H Operations Accident Frequencies

Accident	Frequency (/year)
MM VIII Earthquake	5.00E-04
Damage to Tank E-4-2	<2.86E-03
F–3 Tornado	2.70E-05
Overflow	7.01E-02
Hydrogen Deflagration	9.40E-06
External Impact – Hanford Container	4.73E-02
External Impact – A–Line Feed & Product Tank or Sample Return Trailer*	2.63E-03
Solvent Fire (Seg. Solvent)	6.13E-04
A-Line (Large fire)	6.13E-05
Criticality (A–Line)	6.60E-05

* The trailer accident occurrences may be EU if all ACs are considered otherwise, the impact frequency is assumed to be the same as for any tank external impact.

A.2.4.1 NATURAL PHENOMENA – EARTHQUAKE

The MM VII earthquake frequency used for the entire site is 5.0E-04/year.

Tank E4–2, the silo tank, is a tall thin cylindrical tank (12 feet diameter by 40 feet high). The HEU will be stored in this tank until it is mixed with the NU in the blending operation. During planning for the blending operations, a concern about the capability of the E4–2 tank to withstand a DBE when completely full was raised. The silo tank is a unique tank in OF–H in that it has a height to diameter ratio of much greater than 1. This high height to diameter ratio is the basis for the seismic concern about this tank. The other upright OF–H tanks (height to diameter ratio of approximately 1) are not a concern. To resolve the concern with the E4–2 tank, a structural analysis was completed.

The structural analysis (Ref. 16) indicates that the E4–2 tank will withstand an earthquake with a return period of 350 years without failing when fully loaded with a high specific gravity solution. The 350–year return period equates to a frequency of 2.86E-03/yr. A greater magnitude earthquake (i.e., return period >350 years or a frequency <2.86E–03/yr) is expected to cause failure of the E4–2 tank piping. The tank itself is not expected to overturn; however, the motion caused by the earthquake could damage the outlet pipes and valves at the bottom of the tank causing the release of the entire tank contents. Therefore, for analysis purposes in this SAR Addendum, the E4–2 Silo Tank and its associated piping is assumed to fail (breach of primary

confinement) with the resultant loss of the total tank contents to the environment in an earthquake with a frequency of 2.86E-03/yr.

Note that the earthquake frequency at which the silo tank fails is considered to be the upper bound frequency of any earthquake which would cause damage or loss of radioactive or chemical materials from the OF–H tanks. The SAR accident analysis has always assumed total loss of any OF–H tank in a PC–3 DBE. In reality any given OF–H tank could fail at any frequency between 2.86E-03/yr (350 year return period) and 5.0E-04/yr (2,000 year return period). Therefore, to show the range from the worst case tank (i.e., Tank E4–2) to the previously analyzed case in which all the OF–H A–Line tanks are assumed to fail, Figures A.2–1 and A.2–2 have both the 350 year (for Tank E4–2 only) and the 2,000 year (for all processes) return period earthquakes plotted along with the resulting consequences. It is noted that E4–2 is a unique tank and is considered to be the tank most likely to fail in a smaller magnitude earthquake.

A.2.4.2 NATURAL PHENOMENA – TORNADO

The F–3 tornado frequency is the frequency used in the old OF–H SAR (Ref. 1) which is the tornado frequency for the entire site. The Silo Tank (Tank E4–2) is not expected to fail in a tornado or straight wind condition less than the design basis tornado. Therefore, further analysis of Tank E4–2 from a tornado or straight winds perspective is not required. The frequency of an F–3 tornado is given as 2.7E-05/year.

A.2.4.3 LOSS OF CONFINEMENT

The loss of confinement accident was envisioned to be one of the typical spill/leak/overflow/transfer error type accidents analyzed in the old SAR (Ref. 1). Therefore, the frequency for the event with the highest consequence, the overflow, was chosen for this accident. This frequency is 7.0E-02/year.

A.2.4.4 HYDROGEN DEFLAGRATION

The old OF–H SAR (Ref. 1) analyzes a major explosion (organic vapor explosion) scenario for the A–Line tanks. A new event, the hydrogen deflagration, is postulated to be a credible accident for the HEU Blending and NU/DU Storage Processes, with different accident initiators and frequency of occurrence from the major explosion analyzed in the SAR. For a deflagration to occur in one of the Hanford Containers, two things must occur: 1) the container must generate enough hydrogen to reach the lower explosive limit and, 2) be ignited. There are no instruments or fans in these containers. Since the containers and trailers remain vented or annually purged, the only opportunities for a hydrogen deflagration require the vent to be clogged or the purging not be performed in an appropriate timeframe, and reaching the explosive concentration of hydrogen combined with an ignition source (such as static electricity). If the containers and trailers are assumed to be continuously vented to maintain the hydrogen level below the LFL, the calculated frequency of a hydrogen deflagration (Ref. 17) is below 1.0E-05/yr. For the vented

A–Line feed and product tanks, no credit is taken for the Recycle Vessel Vent System. For the A-Line tanks, design features (e.g., liquid overflow lines or the opening around the agitator shaft) provide passive vents, which will allow hydrogen removal. A hydrogen deflagration is assumed to be credible in the vented A–Line tanks with a frequency bounded by the Hanford Containers.

Because of the very slow hydrogen generation rate from radiolysis of water from uranium compounds, engineering judgment and experience indicates that it will take years to exceed the LFL in the A–Line Tanks and the LEU Measuring Tank. Based on the process times and the amount of time a uranyl nitrate solution will remain in each tank, it is not credible that the LFL of a hydrogen–air mixture would be exceeded for any A–Line Tank. This conclusion is based on calculations of the hydrogen generation rate of the DU solution stored in the Hanford Containers that shows that it will take longer than ten years to exceed the LFL in the vapor space of the Hanford Containers. Additionally differences in design and construction (e.g., passive vents) and use (long term storage versus short term storage) between the A–Line Tanks and the Hanford Containers, indicate that it is Beyond Extremely Unlikely (BEU) that the LFL could be exceeded in the A–Line Tanks. However, because the LFL could be exceeded in some of the Hanford Containers, used for long term storage, it will be conservatively assumed that a hydrogen deflagration can occur in any of the DU/NU/HEU/LEU storage tanks with a frequency of 9.4E-06/year.

A.2.4.5 EXTERNAL IMPACT

The vehicle crash frequency is assumed to be the frequency of an external impact and is given as 2.63E-03/year in Section 5.3.2.2 of Reference 1. A single Hanford Container contains approximately the same amount of radioactive material and therefore the same source term, except for the E4–2 and EUS Tanks, as any one of the OF–H processes analyzed in the SAR. It is conservatively assumed that each container can be treated as a process. To determine the vehicle crash frequency for stored DU material, the SAR frequency is multiplied by 18 to obtain the DU storage area frequency of 4.73E-02/yr. The frequency for impact of the A–Line feed and product tanks or tanker trucks remains 2.63E-03/yr as given in the existing OF–H SAR. The frequency of a vehicle crash is assumed to be the bounding frequency for any other external impact event such as a dropped crane load into an A–Line Tank.

A.2.4.6 FIRE

A solvent fire was analyzed in the old OF–H SAR (Ref. 1). The frequency of a solvent fire involving the Segregated Solvent Tanks was calculated to be 6.13E-04/year for all six Segregated Solvent Tanks (Ref. 1, Table C-17). The Segregated Solvent fire frequency calculated in Reference 1 was for a nominal fire. This addendum assumes a maximum bounding fire. The frequency of this fire, in which all the Segregated Solvent is released and burned, is judged to be at least an order of magnitude less than that for a nominal fire. However, for consistency and conservatism, the frequency of a nominal fire of 6.13E-04/year as calculated in the SAR was used for the fire in the Segregated Solvent Tank.

The large gasoline tanker fire around the A–Line Tanks is composed of three events. The first is that a commercial tractor–trailer rig with a 10,000 gallon tanker (trailer) full of gasoline impacts the EUS Tank with sufficient energy to breach both walls of the EUS Tank releasing the entire EUS Tank contents. The gasoline trailer then fails structurally so that all 10,000 gallons of gasoline are immediately released. The third part is that there is an ignition source available to ignite the gasoline. The burning gasoline and aqueous solution (170,000 gallons total) stay in the immediate A–Line area (i.e., does not flow away) and the gasoline burns completely. A reasonable argument can be made that the large gasoline tanker fire is a BEU event. However, for conservatism and to include this worst case fire in the accident analysis, it is judged that the large gasoline tanker fire frequency will be at least an order of magnitude less than the nominal Segregated Solvent Fire. The large gasoline tanker fire is judged to have a maximum frequency of 6.1E-05/year with the actual frequency much lower.

A wildland fire has been shown to be in the Unlikely frequency range with a similar frequency to the Segregated Solvent Fire.

A.2.4.7 CRITICALITY

Criticality is a concern for the blending and shipping operations since enriched uranium is used in the process. Criticality is not a concern for DU storage since the amount of U–235 in the DU is significantly less than that present in natural uranium. The blending and shipping operations are essentially the same type operations completed in OF–H and the A–Line tanks throughout the operational life of H–Canyon. The same controls used in the existing SAR, Technical Safety Requirements (TSR), and Double Contingency Analysis (DCA) will be used to prevent a criticality during the blending and shipping operations. The criticality frequency for the A–Line tanks is given in Section 5.3.3.13 and Table C–19 of Reference 1 as 6.60E-05/year. This frequency will not change as a result of the blending, storage, and shipping operations analyzed in this addendum.

A.2.5 ACCIDENT CONSEQUENCES

The information in this introduction to Section A.2.5 applies to all of the accident consequences reported in the sub–sections below. For all of the accident consequences reported below, all of the radiological consequences are below the EGs for the MOI (25 rem) and the OEP (100 rem). Additionally, the consequences do not exceed the minimum EGs required to establish Safety Significant (SS) defense–in–depth controls to protect the offsite public as defined in WSRC E7 Manual Procedure 2.25.

Similarly, none of the chemical consequences, reported in mg/m^3 exceed the EGs for the respective onsite or offsite receptors. The chemical consequences reported are in terms of the maximum concentrations of the chemical (uranium) in air so that the accident induced concentration can be compared to the appropriate TEEL limit for the frequency range in which the accident is postulated to occur.

None of the calculated chemical or radiological doses exceed the appropriate EGs. The use of the 500 g/l source term in the consequence analysis provides additional conservatism to indicate that the actual accident consequences will be much lower than those reported in this analysis.

As previously noted, the consequences for the EUS Tank will be increased by 3% to include the U–232 source term currently in the tank and that expected to be in the INEEL material that will be dissolved and stored in the EUS or A–Line Tanks. The increase in the radiological source term will not have any impact on or increase the chemical consequences previously calculated because of the small amount (6.5E-01 gm) of U–232 present.

A.2.5.1 NATURAL PHENOMENA — EARTHQUAKE

The Performance Category (PC)-3 Earthquake (roughly equivalent to the formerly-analyzed MM VIII Earthquake) is postulated to cause sufficient damage to allow radioactive solutions to escape from their respective tanks, and following a breach in the curbing containment, run into the nearby storm sewer. Subsequently, it is released to Four Mile Creek where it enters the wetlands system and flows to the Savannah River. For the DU storage and HEU Project blending and shipping operations, the consequences were assessed with a 100% loss of solution. This includes all of the Hanford Containers, all A–Line Tanks, the EUS Tank, and the LEU Measuring Tank (Tank E1–2). The original accident consequence analysis assumed that there was the equivalent of 18 Hanford Containers containing 17,500 liters of U solution at a concentration of 500 g/L total U. The U was assumed to contain 800 ppb Pu-239. The EUS and other A-Line Tanks were also assumed to be at their maximum volume containing a U solution at a 500 g/L total U concentration. Based on this analysis, additional Hanford Containers, or their equivalent, can be stored in OF-H and included in the OF-H inventory. This assumes the Pu in the solution is near the 800 ppb concentration assumed in the analysis and the total U concentration is less than 500 g/L. For example, if the total U concentration is 250 g/L (assumes no increase in Pu concentration) and each storage vessel is less than or equal to 17,500 liters, then up to 36 Hanford Containers or their equivalent can be stored in OF-H within the current accident analysis. The EUS Tank is a double walled tank that is seismically qualified to withstand a PC–3 basis earthquake. It is also expected that most if not all of the other A–Line tanks will remaining standing without substantial damage after a DBE. However, the piping for the tanks is not seismically qualified. Therefore, in a DBE, it is assumed that the piping fails and the contents of all of the tanks are released to the A–Line or Hanford Container Storage Area curbs and dikes. It is assumed that the concrete curbs and dikes fail during the earthquake so that they cannot maintain a secondary confinement area for the released radioactive liquids.

There are two separate exposure pathways assessed for the earthquake event: 1) an airborne pathway from the spill and resuspension (or evaporation) of radioactive solutions, and 2) a waterborne pathway from liquid material flowing into the surface water systems. In Section 5.4.1.2 of the old OF-H SAR (Ref. 1), for all systems except the Basin Transfer Tanks (BTT), it is assumed that 50% of the released liquid reaches the surface water system, with the remaining 50% forming a pool or pools and contributing to a resuspension source term. Since the BTT are entirely below grade, there is no release to surface water for this system. The airborne source term is evaluated in two parts. The first of these is the free-fall spill from the tank. The second is the resuspension release, which is assumed to occur over the 48-hour cleanup period. For the

waterborne pathway, no dilution or holdup processes in the intervening wetlands are credited to reduce the radioactive material entering the Savannah River. See Reference 8 for the airborne curies released at ground level due to a PC–3 earthquake.

Note that for the MOI, a liquid dose pathway exists and dominates the evaporative airborne source term dose. No such liquid dose pathway exists for the 100 or 640 m OEP (co-located worker). The total dose to the MOI (liquid plus airborne) from the DBE event is 3.10E+02 mrem for the A–Line Tanks only. There is only an airborne release pathway for the OEP. The dose from a DBE to the 100–meter OEP is 1.1E+02 mrem for the A–Line Tanks only. When the other OF–H processes are included, the total doses are 3.2E+02 mrem and 1.6E+02 mrem to the MOI and the OEP, respectively.

All of the A–Line tanks are assumed to contain the same solution with the same isotopic content blended LEU. A previous analysis assumed that Tank E4–2 contains approximately 1.22E+05 liters of LEU blended process solution with an associated dose of 8.1E+01 mrem to the 100 meter OEP and 2.60E+01 mrem to the MOI.

The doses for the MOI and co-located worker are plotted in Figures A.2–1 and A.2–2 against the 350–year earthquake return period frequency to clearly show the expected doses from this event and to show that the doses from this lower magnitude earthquake are bounded by other events within the same frequency category. Since E4–2 is the largest single tank (other than the EUS Tank) involved in the blending and storage operations, the doses from any other single tank that fails will be less than that obtained from the E4–2 tank at the lower earthquake frequency. Therefore, the dose from an E4–2 tank failure will bound the doses from failure of any other single tank in OF–H A–Line. Note that this does not apply to the DBE, in which the contents of all of the tanks, to include the EUS Tank are released.

The consequences for the earthquake, including the sample return trailers, are 3.9E+02 mrem for the MOI and 7.5E+02 mrem for the OEP at 100 meters.

All of the radiological consequences are below the EGs for the MOI (25 rem) and the OEP (100 rem). Additionally, the consequences do not exceed the minimum EGs required to establish Safety Significant (SS) defense–in–depth controls to protect the offsite public as defined in WSRC E7 Manual Procedure 2.25.

The DBE induced airborne uranium concentrations are 1.1E-01 mg/m^3 for the MOI and 5.0E-02 mg/m^3 for the 100–meter OEP. Both of these values are less than the TEEL–2 limits of 0.6 mg/m^3 for the respective receptor.

A.2.5.2 NATURAL PHENOMENA – TORNADO

The consequences of a F–3 tornado were originally given in Section 5.4.1.1 of the old OF-H SAR (Ref. 1). In that document, it is assumed that 100% of the contents of the vessel containing the highest inventory of radioactivity in each area is spilled. For the DU Storage and Blended A-Line Operation, this SAR addendum assumes the contents of all the tanks are released to the pad. This includes the contents of all of the Hanford Containers, the EUS Tank, and all other A–Line

Tanks. Please see Section A.2.5.1 on earthquakes to explain the basis for the amount of DU assumed to be released during a tornado. Because the B3 Basin is below grade, the B3 Basin tanks are not included in the DBT release scenario. The doses in this addendum were calculated for a F–2 tornado. The F–2 tornado provides less dispersion of the radioactive material released than does a F–3 tornado. Therefore, the doses from the F–2 tornado would be higher than the doses for a F–3 tornado assuming the same amount of material is released. Since the F–2 consequences will bound the F–3 tornado consequences, the F–2 tornado consequences will be reported along with the F–3 accident frequency to ensure that there is a bounding consequence release.

There are two separate exposure pathways assessed for the tornado event: 1) an airborne pathway from the spill and resuspension (or evaporation) of radioactive solutions, and 2) a waterborne pathway from liquid material flowing into the surface water systems. In Section 5.4.1.2 of the old OF-H SAR (Ref. 1), it is assumed that 50% of the released liquid reaches the surface water system, with the remaining 50% forming a pool that contributes to a resuspension source term. The airborne source term is evaluated in two parts. The first of these is the free-fall spill from the tank. The second is the resuspension release, which is assumed to occur over the 48-hour cleanup period. For the waterborne pathway, no dilution or holdup processes in the intervening wetlands are credited to reduce the radioactive material entering the Savannah River. See Reference 8 for the ground level airborne curies released during a tornado.

The radiological consequences for a tornado are 2.7E+02 mrem and 3.6E+01mrem respectively to the MOI and the OEP for the A–Line Tanks only. The total doses from a tornado considering all of the OF–H processes are 3.5E+02 mrem and 4.4E+02 mrem for the MOI and OEP, respectively. The chemical concentrations are 6.1E-05 mg/m^3 and 2.0E-02 mg/m^3 for the OEP and MOI, respectively. Both the radiological and chemical consequences are below the respective EGs.

The consequences for the tornado, including the sample return trailers, are 3.5E+02 mrem for the MOI and 4.4E+02 mrem for the OEP at 100 meters.

A.2.5.3 LOSS OF CONFINEMENT

Section 5.4.3.2, the old OF-H SAR (Ref. 1) discusses the consequences of an overflow or other low energy loss of confinement events. The scenario analyzed in this SAR addendum assumes the overflow or other low energy loss of confinement events cause the entire contents of the EUS Tank or a sample return trailer to be deposited on the pad. The liquid pool forms a resuspension source term. This resuspension release is assumed to occur over the 48-hour cleanup period. The source term for this event is composed of a splash and a resuspension term. See Reference 8 for the airborne curies released at ground level from an overflow or other low energy loss of confinement event. The EUS Tank contents are assumed to be released in these type events. Since the EUS Tank is the largest tank in A–Line or OF–H, the consequences associated with this tank bounds all the other tanks.

The radiological doses associated with a low energy loss of confinement event are 5.8E+01 mrem and 1.2E+03 mrem for the MOI and the OEP, respectively. The chemical concentrations

for uranium are 5.4E-02 mg/m^3 and 4.4E-02 mg/m^3 for the MOI and OEP, respectively. These values are less than the radiological and chemical EGs for the MOI and OEP (100–meter) receptors.

A.2.5.4 HYDROGEN DEFLAGRATION

For the NU/DU storage an uncontrolled reaction (e.g., red oil explosion or chemically induced eructation) is not a credible event since new materials or chemicals will not be added to the Hanford Containers. For the A–Line tanks, an uncontrolled reaction is a credible event since the possibility exists to transfer the wrong chemical to these tanks. The uncontrolled reaction is expected to result in a burping or eructation which releases part of the contents of the tanks. This type uncontrolled reaction is much less energetic and results in less of a radioactive material release than a hydrogen deflagration. Since the hydrogen deflagration will result in a much larger release of the initial aerosol and liquid fractions than an uncontrolled reaction, the hydrogen deflagration is considered to be the bounding consequence case for the uncontrolled reaction scenario. The less energetic uncontrolled reactions, which result in a burping of the tank, do not release enough radioactive material as an airborne aerosol to override or bound the effects of the liquid doses from an overflow event in which the entire tank contents are released. The less energetic uncontrolled reactions are not analyzed further since they are considered to be bounded by consequences of the overflow or vehicle impact events.

Although a hydrogen deflagration is most likely a BEU event, this event is analyzed in this addendum for completeness. The hydrogen deflagration is assumed to occur in the EUS Tank since this is the largest tank in A–Line. The hydrogen deflagration event is modeled as a stoichiometric reaction involving 30% by volume hydrogen in air. To maximize the energy released, the EUS Tank vapor space is assumed to occupy 99% of the tank volume (i.e., 99% of the tank volume is a 30% hydrogen–air mixture). For the MOI, a TNT equivalent model is used to determine the consequences in which the energy generated by a stoichiometric detonation of the hydrogen–air mixture is converted to an equivalent mass of TNT that produces the same amount of energy. A mass of the liquid in the tank, equal to the TNT mass, is assumed to be aerosolized by the deflagration and released from the EUS Tank.

For the OEP, a less energetic deflagration model is used, in which the energy generated by the explosion acts on the liquid surface and aerosolizes or vaporizes the surface liquid. This results in less radioactive mass being released than in the TNT equivalent model, but is still a very conservative and reasonably bounding approach to determine the accident consequences to the OEP.

Because of the slow generation of hydrogen by radiolysis from uranium solutions, it is BEU that sufficient hydrogen could accumulate in the EUS Tank vapor space to exceed the LFL and for a deflagration to occur. Additionally, the EUS Tank is assumed to contain a solution with 500 g/l total U. The mass of material released in the analysis is conservative and bounding for both the MOI and the OEP. Additionally, the guidelines state that the OEP should be based on median and not bounding analyses. A deflagration is a median model when compared to a detonation (e. g., TNT equivalent) model.

See Reference 8 for the curies released at ground level from a hydrogen deflagration.

The radiological consequences of a hydrogen deflagration are 1.7E+02 mrem and 9.4E+03 mrem for the MOI and the OEP, respectively. The chemical consequences are 3.0E-01 mg/m^3 and 5.9E+00 mg/m^3 for the MOI and OEP, respectively. These consequences are less than the EGs for the frequency range for this event.

A.2.5.5 EXTERNAL IMPACT

The consequences of a vehicle crash are discussed in Section 5.4.2.2 of the old OF-H SAR (Ref. 1). For the purposes of this analysis, this is considered to be an external impact event regardless of the cause. The vehicle crash event has the highest frequency of occurrence and therefore the highest risk. Since the source term available in the event is the same regardless of the type external impact (e.g., vehicle, dropped crane load, train, helicopter crash, etc.), the consequences for the various types of impact will not change significantly. The bounding case for an external impact accident is a tank rupture causing 100% of the EUS Tank contents to be discharged to the pad. The released liquid forms a pool, which is the basis for an evaporative and a resuspension source term. This resuspension release is assumed to occur over the 48-hour cleanup period. The consequence calculations also assume that there is a splash source term from the falling liquid. The source terms from the splash and the resuspension are combined to give the total dose from this event. The consequences of an external impact into a Hanford Container (17,500 liters) are also calculated in Reference 7. See References 7 and 8 for the airborne curies released at ground level from an external impact.

The dose from an external impact into the EUS Tank will bound all other external impacts into any other A–Line Tank, sample return trailers, or the Hanford Containers for the offsite receptor. This is because the EUS Tank is the largest tank and all the Hanford Containers and the A–Line Tanks are assumed to have the same 500 g/l total U solution in them. The radiological consequences from an external impact into the EUS Tank are 3.9E+01 mrem and 1.0E+02 mrem to the MOI and OEP, respectively. The radiological consequences from an external impact to the Sample Return Trailer are 1.7E+01 mrem and 7.6E+03 mrem to the MOI and OEP, respectively. The chemical consequences in term of uranium concentration are 5.4E-02 mg/m^3 and 4.4E-02 mg/m^3 for the MOI and the OEP, respectively. The accident consequences are within EGs for the Anticipated frequency range.

A.2.5.6 FIRE

Due to the presence of solvents in the Segregated Solvent process unit, an analysis of a solvent fire in this system was performed. For this analysis, it was assumed that the entire contents of the tank under consideration burned to dryness. Therefore, there is no liquid resuspension release during a cleanup period. See Tables C–7 and C–8 of Reference 7 for the airborne curies released at ground level from a solvent fire in the Segregated Solvent Tanks only.

The accident analysis for the HEU Project analyzed three additional fires that could impact the OF–H Facility, particularly the A–Line Tanks involved in the HEU Blend Down Project. The

three fires analyzed were a zone fire, typically a tractor trailer truck fire, a wildland fire, and a fire in which 10,000 gallons of gasoline burn in the vicinity of the A–Line Tanks. The large gasoline tanker fire will bound the consequences associated with a wildland fire or a smaller zone fire involving one or two tanks. Therefore, although Reference 9 contains the analysis for the smaller truck fire as a zone fire, the consequences will not be reported in this addendum.

The gasoline tanker fire is assumed to occur in the following sequence. A large commercial tractor–trailer rig, in which the trailer is a full 10,000 gallon gasoline tank, crashes into the EUS Tank. The external impact ruptures both walls of the EUS Tank and releases the entire 160,000 gallon capacity of the tank with a solution containing 500 g/l total U. Additionally, the tanker fails structurally releasing all 10,000 gallons of gasoline. The liquids separate (decant) and form a pool that stays adjacent to the A–Line Tanks. The gasoline is ignited and the fire burns until the gasoline is completely consumed. Additionally, flammable insulation around some A–Line Tanks is assumed to be ignited and burns completely. The heat from the gasoline fire and the burning insulation do not fail the A–Line Tanks but boils the aqueous solutions in these tanks. The B3 Basin tanks are not involved in this fire because of their physical separation distance from A–Line.

The source term for this large fire is composed of four elements. The first is the splash term from the liquid that is released from the EUS Tank. The second is the evaporative (resuspension) source term related to the EUS Tank solution that remains on the ground 48 hours before it is cleaned up. The third source term is the boiling of the aqueous liquid released from the EUS Tank. The fourth source term is the material released as a result of boiling the aqueous solutions in the other A–Line Tanks.

The radiological consequences associated with the large gasoline tanker fire are 2.0E+02 mrem and 2.1E+04 mrem to the MOI and the OEP, respectively. The chemical consequences in terms of the airborne uranium concentration are 4.6E-02 mg/m^3 and 4.6E+00 mg/m^3 for the MOI and OEP, respectively. Both the radiological and chemical consequences are less than the EGs for each receptor. The consequences for the sample return trailers are 1.7E+01 mrem for the MOI and 7.60E+03 mrem for the OEP at 100 meters.

A.2.5.7 CRITICALITY

The possibility of a criticality in a sump in OF-H was considered. For this analysis 1.0E+19 fissions were assumed, and the source term used in the MACCS calculation was derived from results presented in N–CLC–H–00324. Specifically, the bounding results at 0.25 minutes following the criticality were used as the basis for the MACCS source term. In addition to the dose from the material released during the criticality, the calculation of dose to the worker located 100 m also included the direct gamma and neutron dose from the criticality itself (N–CLC–H–00326). See Table C–9 of Reference 7 for the airborne curies released at ground level from a criticality in the sump.

A.2.6 RADIOLOGICAL DOSES AND RISKS

A.2.6.1 DOSES AND RISKS DUE TO NATURAL PHENOMENA

The natural phenomena discussed in the SAR, which result in a radiological release, are the PC-3 earthquake and the F–3 tornado. The earthquake release sequence is a radioactive material loss from the primary confinement (tank), with the subsequent escape of the liquid through cracks in the pad, resulting in a liquid release and a ground level airborne release. The radiological doses and risks for the PC-3 earthquake for the Maximum Offsite Individual, the OEP at 100 m are tabulated and summed in Tables A.2.6–1A, and A.2.6–1B, respectively. The chemical risks are tabulated in Table A.2.7–1A and A.2.7–1B, respectively.

The doses and risks from the assumed failure of the E4–2 Tank during an earthquake with a return period of 350 years are also given in Tables A.2.6–1A, and A.2.6–1B, respectively. As previously noted, the dose from Tank E4–2 is assumed to be 5% of the total dose from the A–Line blending process. A review of the tables and Figures A.2–1 and A.2–2 indicate that the risk from failure of the silo tank in an earthquake with a 350 year return period is insignificant when compared to the risk associated with the assumed failure of all the OF–H Tanks and the Hanford Containers in a DBE with a 5,000 year return. Although the frequency of the 350 year return period earthquake is an order of magnitude higher than the DBE (PC–3), the risk to the MOI from an earthquake that releases all the contents of the A–Line Tanks and the Hanford Containers is 1.6E-01 mrem/yr as compared to the risk associated with the E4–2 Tank of 7.4-02 mrem/yr. This indicates that there is no significant increase in the risk from the E4–2 Tank at the higher frequency event.

Since this accident analysis includes all the material to be stored or processed in OF–H and the A–Line, it specifically includes the LEU (nominal 4.95% enriched) material to be loaded into the shipping containers.

The release sequence for a tornado is the loss of radioactive material from the primary confinement, with overflow of the spilled liquid pool from the pad, resulting in both an airborne release at ground level and a surface water release. The frequency of an F–3 tornado is reported along with the bounding consequence dose for an F–2 tornado. Doses and risks for the F–3 tornado for the MOI, and the OEP at 100 m are tabulated and summed in Tables A.2.6–2A, and A.2.6–2B, respectively.

A.2.6.2 DOSES AND RISKS DUE TO PROCESS RELATED OCCURRENCES

For process related occurrences, the overflow and hydrogen deflagration accidents are the bounding case events that can lead to ground level airborne releases. Doses and risks for the overflow, hydrogen deflagration, and external impact events for the MOI and the OEP at 100 meters are tabulated in Tables A.2.6–3A and A.2.6–3B, Tables A.2.6–4A and A.2.6–4B, and Tables A.2.6–5A and A.2.6–5B, respectively. Doses and risks for the Segregated Solvent Fire and criticality are tabulated in Tables A.2.6–6A and A.2.6–6B, and Tables A.2.6–7A and A.2.6–7B, respectively.

The chemical risks associated with all of the postulated accidents are given in Tables A.2.7–1A and A.2.7–1B for the MOI and the OEP, respectively. No risk (i.e., frequency times consequences) are reported in the tables for the chemical events. Instead the frequency and related consequences for each event is reported without assigning a risk value to the event.

Table A.2.6–1 Dose and Risk Due to an Earthquake

Table A.2.6–1A Dose and Risk to Offsite Maximum Individual Due to Earthquake in H–Area Outside Facilities

Unit Operation	Frequency (per year)	Dose MOI (EDE, mrem)	Risk (mrem/yr)
ARU	5.0E-04	3.0E-01	1.5E-04
GP Evaporators	5.0E-04	3.8E-01	1.9E-04
Segregated Solvent, 1st Cycle	5.0E-04	8.2E+00	4.1E-03
Segregated Solvent, 2nd Np Cycle	5.0E-04	5.7E-02	2.8E-05
Segregated Solvent, 2nd U Cycle	5.0E-04	1.7E-01	8.5E-05
Blended Uranium Product Storage in A–Line **	5.0E-04	3.2E+02	1.6E-01
Depleted and Blended Uranium * Product Storage (E-4-2 Tank Only)	2.9E-03	2.6E+01*	7.5E-02
Water Handling System	5.0E-04	2.8E-02	1.4E-05
Basin Transfer Tanks	5.0E-04	6.4E-05	3.2E-08
Sample Return Trailer	5.0E-04	5.7E+01	2.9E-02
Total	5.0E-04	3.9E+02	2.0E-01

Table A.2.6–1B Dose and Risk to OEP at 100 Meters Due to Earthquake in H–Area Outside Facilities

Unit Operation	Frequency (per year)	Dose OEP 100 Meters (EDE, mrem)	Risk (mrem/yr)
ARU	5.0E-04	1.5E+00	7.5E-04
GP Evaporators	5.0E-04	2.2E+00	1.1E-03
Segregated Solvent, 1st Cycle	5.0E-04	4.1E+01	2.1E-02
Segregated Solvent, 2nd Np Cycle	5.0E-04	1.1E-01	5.5E-05
Segregated Solvent, 2nd U Cycle	5.0E-04	8.2E-01	4.1E-04
Blended Uranium Product Storage in A–Line **	5.0E-04	1.1E+02	5.5E-02
Depleted and Blended Uranium * Product Storage (E-4-2 Tank Only)	2.9E-03	8.1E+01*	2.3E-01*
Water Handling System	5.0E-04	1.6E-01	8.0E-05
Basin Transfer Tanks	5.0E-04	3.8E-02	1.9E-05
Sample Return Trailer	5.0E-04	5.9E+02	3.0E-01
Total	5.0E-04	7.5E+02	3.8E-01

* Value for E4–2 Tank is not included in the total dose for either table since it is already included in the total value for the Depleted and Blended Uranium Product Storage value reported immediately above the value for the E4–2 Tank.

** Original consequences increased by 3% to account for U–232. For the OEP, the increase does not affect the overall results.

Table A.2.6–2 Dose and Risk Due to a Tornado

Table A.2.6–2A Dose and Risk to Offsite Maximum Individual Due to Tornado in H–Area Outside Facilities

Unit Operation	Frequency (per year)	Dose MOI (EDE, mrem)	Risk (mrem/yr)
ARU	2.7E-05	3.0E-01	8.1E-06
GP Evaporators	2.7E-05	3.8E-01	1.0E-05
Segregated Solvent, 1st Cycle	2.7E-05	8.2E+00	2.2E-04
Segregated Solvent, 2nd Np Cycle	2.7E-05	5.7E-02	1.5E-06
Segregated Solvent, 2nd U Cycle	2.7E-05	1.7E-01	4.6E-06
Blended Uranium Product Storage in A–Line **	2.7E-05	2.8E+02	7.6E-03
Water Handling System	2.7E-05	2.7E-02	7.3E-07
Basin Transfer Tanks	2.7E-05	5.0E-03	1.4E-07
Sample Return Trailer	2.7E-05	5.7E+01	1.5E-03
Total	2.7E-05	3.5E+02	9.5E-03

Table A.2.6–2B Dose and Risk to OEP at 100 Meters Due to Tornado in H–Area Outside Facilities

Unit Operation	Frequency (per year)	Dose OEP 100 Meters (EDE, mrem)	Risk (mrem/yr)
ARU	2.7E-05	6.9E-01	1.9E-05
GP Evaporators	2.7E-05	1.1E+00	3.0E-05
Segregated Solvent, 1st Cycle	2.7E-05	2.1E+01	5.7E-04
Segregated Solvent, 2nd Np Cycle	2.7E-05	5.5E-02	1.5E-06
Segregated Solvent, 2nd U Cycle	2.7E-05	3.6E-01	9.7E-06
Blended Uranium Product Storage in A–Line **	2.7E-05	3.7E+01	1.0E-03
Water Handling System	2.7E-05	8.0E-02	2.2E-06
Basin Transfer Tanks	2.7E-05	1.1E-02	3.0E-07
Sample Return Trailer	2.7E-05	3.8E+02	1.0E-02
Total	2.7E-05	4.4E+02	1.2E-02

** Original consequences increased by 3% to account for U–232.

Table A.2.6–3 Dose and Risk Due to an Overflow in OF–H

Table A.2.6–3A Dose and Risk to Offsite Maximum Individual Due to Overflow in H–Area Outside Facilities

Unit Operation	Frequency (per year)	Dose MOI (EDE, mrem)	Risk (mrem/yr)
Blended Uranium Product EUS Tank **	7.0E-02	3.9E+01	2.7E+00
Sample Return Trailer	7.0E-02	5.8E+01	4.1E-00

Table A.2.6–3B Dose and Risk to OEP at 100 Meters Due to Overflow in H–Area Outside Facilities

Unit Operation	Frequency (per year)	Dose OEP 100 Meters (EDE, mrem)	Risk (mrem/yr)
Blended Uranium Product EUS Tank **	7.0E-02	1.0E+02	7.0E+00
Sample Return Trailer	7.0E-02	1.2E+03	8.4E+01

** Original consequences increased by 3% to account for U–232. For the OEP, the increase does not affect the overall results.

Table A.2.6–4 Dose and Risk Due to a Hydrogen Deflagration in OF–H

Table A.2.6–4A Dose and Risk to Offsite Maximum Individual Due to Hydrogen Deflagration in H–Area Outside Facilities

Unit Operation	Frequency (per year)	Dose MOI (EDE, mrem)	Risk (mrem/yr)
Blended Uranium Product EUS Tank **	9.4E-06	1.7E+02	1.6E-03

Table A.2.6–4B Dose and Risk to OEP at 100 Meters Due to Hydrogen Deflagration in H–Area Outside Facilities

Unit Operation	Frequency (per year)	Dose OEP 100 Meters (EDE, mrem)	Risk (mrem/yr)
Blended Uranium Product EUS Tank **	9.4E-06	9.4E+03	8.8E-02

** Original consequences increased by 3% to account for U–232.

Table A.2.6–5 Dose and Risk Due to a External Impact in OF–H

Table A.2.6–5A Dose and Risk to Offsite Maximum Individual Due to External Impact in H–Area Outside Facilities

Unit Operation	Frequency (per year)	Dose MOI (EDE, mrem)	Risk (mrem/yr)
Blended Uranium Product EUS Tank *	2.6E-03	3.9E+01	1.0E-01
OF–H Sample Return Trailer**	7.0E-02	5.8E+01	4.1E+00
Hanford Container (DU Storage)	3.7E-02	3.6E+00	1.3E-01

Table A.2.6–5B Dose and Risk to OEP at 100 Meters Due to External Impact in H–Area Outside Facilities

Unit Operation	Frequency (per year)	Dose OEP 100 Meters (EDE, mrem)	Risk (mrem/yr)
Blended Uranium Product EUS Tank *	2.6E-03	1.0E+02	2.6E-01
OF–H Sample Return Trailer**	7.0E-02	1.2E+03	8.4E+01
Hanford Container (DU Storage)	3.7E-02	1.1E+01	4.1E-01

*** Original consequences increased by 3% to account for U–232. For the OEP, the increase does not affect the overall results.**

** The Sample Return Trailer impact consequences in Table A.2.6–5 do not include an associated explosion due to leaking fuel. The consequences for the combined impact/explosion event are bounded by the truck fire scenario, Table A.2.6–6.

Table A.2.6–6 Dose and Risk Due to a Fire in OF–H

Table A.2.6–6A Dose and Risk to Offsite Maximum Individual Due to Fire in H–Area Outside Facilities

Unit Operation	Frequency (per year)	Dose MOI (EDE, mrem)	Risk (mrem/yr)
Segregated Solvent, 1st Cycle	6.1E-04	5.2E+00	3.2E-03
Segregated Solvent, 2nd Np Cycle	6.1E-04	9.8E-02	6.0E-05
Segregated Solvent, 2nd U Cycle	6.1E-04	4.4E-01	2.7E-04
A–Line Tanks (large fire) **	6.1E-05	2.0E+02	1.2E-02
OF–H Sample Return Trailer	6.1E-04	1.7E+01	1.0E-02

Table A.2.6–6B Dose and Risk to OEP at 100 Meters Due to Fire in H–Area Outside Facilities

Unit Operation	Frequency (per year)	Dose OEP 100 Meters (EDE, mrem)	Risk (mrem/yr)
Segregated Solvent, 1st Cycle	6.1E-04	5.2E+02	3.2E-01
Segregated Solvent, 2nd Np Cycle	6.1E-04	1.0E+01	6.1E-03
Segregated Solvent, 2nd U Cycle	6.1E-04	3.7E+01	2.3E-02
A–Line Tanks (large fire) **	6.1E-05	2.1E+04	1.3E+00
OF–H Sample Return Trailer	6.1E-04	7.6E+03	4.6E+00

** Original consequences increased by 3% to account for U–232. For the OEP, the increase does not affect the overall results.

Table A.2.6–7 Dose and Risk Due to a Criticality in OF–H

Table A.2.6–7A Dose and Risk to Offsite Maximum Individual Due to Criticality in H–Area Outside Facilities

Unit Operation	Frequency (per year)	Dose MOI (EDE, mrem)	Risk (mrem/yr)
Blended Uranium Product A–Line Sump	6.6E-05	3.9E-01	2.6E-05

Table A.2.6–7B Dose and Risk to OEP at 100 Meters Due to Criticality in H–Area Outside Facilities

Unit Operation	Frequency (per year)	Dose OEP 100 Meters (EDE, mrem)	Risk (mrem/yr)
Blended Uranium Product A–Line	6.6E-05	5.2E+04	3.4E-01

A.2.7 CHEMICAL HAZARDS

The chemical hazards associated with A–Line and HEU Project blending, storage, and shipping operations (Ref. 8, 9) are given in Tables A.2.7–1A for the MOI and A.2.7–1B for the OEP. For the A–Line processes, there are two chemicals of concern, nitric acid and soluble uranium. Since the TEEL threshold values to each receptor for uranium are less than those for nitric acid, only the uranium values will be reported in this addendum. These tables tabulate the uranium concentrations in mg/m^3 along with the expected frequency of the accident. No effort was made to try to quantify the risk simply because a term such as mg/m^3/year has no defined meaning. Exposure guides (EG) based on Temporary Emergency Exposure Limit (TEEL) values according to frequency bin (i.e. A, U, EU) and receptor type are listed in Reference 8. The TEEL chemical exposure guides (EG) are given in terms of mg/m^3 of the chemical being analyzed. The use of the TEEL values conservatively approximates DOE approved evaluation guidelines using the Emergency Response Program Guidelines (ERPG) limits.

The majority of the radioisotopes in the sample return solutions will be either U or Pu isotopes. Pu is not a metal that is listed as a high chemical concern. The U in the sample return solution is included and bounded by the existing chemical analysis for U in the concentrated LEU solutions. The nitric acid in the sample return solution is bounded by existing chemical consequence analysis in the larger quantity OF–H tanks.

Table A.2.7–1 Chemical Hazards for A–Line and HEU Project Operations

Table A.2.7–1A Chemical Consequences to the MOI for Accidents in OF–H A–Line

Accident	Frequency Bin	Consequences (mg/m^3)	Frequency Based EG (mg/m^3)	Exceed EG
Earthquake	U	1.1E-01	6.0E-01	No
Tornado	U	2.0E-02	6.0E-01	No
Loss of Confinement	U	5.4E-02	6.0E-01	No
Hydrogen Deflagration	EU	3.0E-01	6.0E-01	No
External Impact	A	5.4E-02	6.0E-01	No
Tanker Truck Fire	EU	4.6E-02	6.0E-01	No

Table A.2.7–1B Chemical Consequences to the OEP for Accidents in OF–H A–Line

Accident	Frequency Bin	Consequences (mg/m^3)	Frequency Based EG (mg/m^3)	Exceed EG
Earthquake	U	5.0E-02	6.0E-01	No
Tornado	U	6.1E-05	6.0E-01	No
Loss of Confinement	U	4.4E-02	6.0E-01	No
Hydrogen Deflagration	EU	5.9E+00	1.0E+01	No
External Impact	A	4.4E-02	6.0E-01	No
Tanker Truck Fire	EU	4.6E+00	1.0E+01	No

A.2.8 HAZARDS TO OPERATING PERSONNEL

The blending of stored HEU solutions, and the receipt, storage, and handling of natural, depleted, and blended UN solution in OF–H does not introduce any new hazards. Existing hazards to operating personnel are addressed in the current H–Canyon and 211–H Outside Facilities SAR and can be divided into radiological and non-radiological (chemical) hazards.

The radiological hazards associated with the UN solutions include surface contamination, airborne contamination, clothing contamination, skin contamination, nasal contamination, assimilation, and penetrating radiation. The facility Radiation Protection Program is conducted in compliance with the WSRC Radiological Controls Manual 5Q. The Radiological Control Operations Organization provides oversight of the Radiation Protection Program to prevent contamination or assimilation and assure that the radiation exposure of facility personnel is maintained As Low As Reasonably Achievable .

The only chemical hazards associated with the UN solutions stored and processed in A–Line are the uranium and the nitric acid. An Industrial Hygiene (IH) Program, described in WSRC Industrial Hygiene Manual 4Q, is implemented to achieve compliance with DOE Orders and DOE–prescribed IH standards for controlling occupational exposures to specific chemical, physical, and biological hazards.

Figure A.2.2-1 Risk to Maximum Offsite Individual (MOI) From OF-H Maximum Accidents

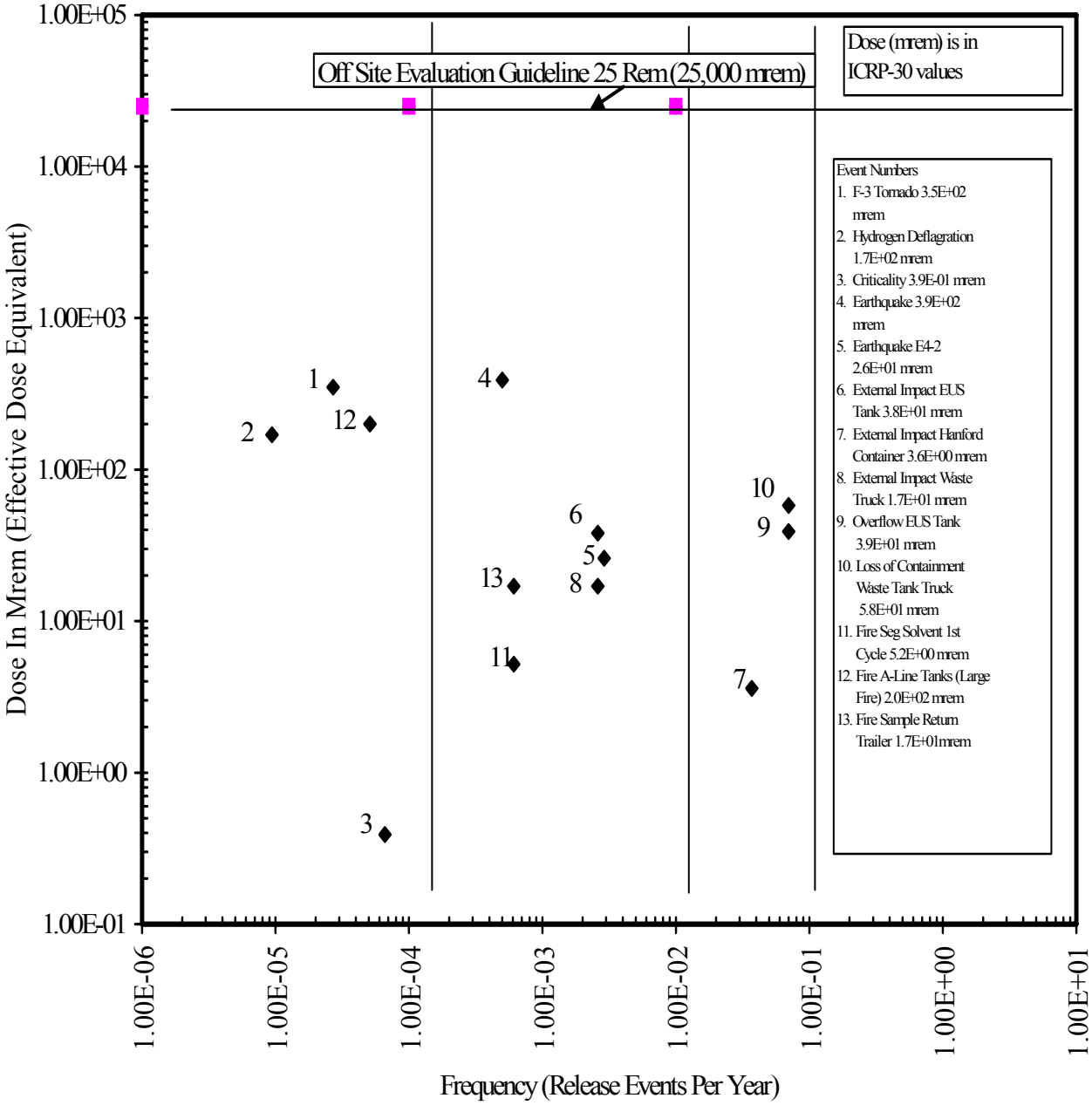

Figure A.2.2-2 Risk to the Maximum Collocated Worker (OEP) From OF-H Maximum Accidents

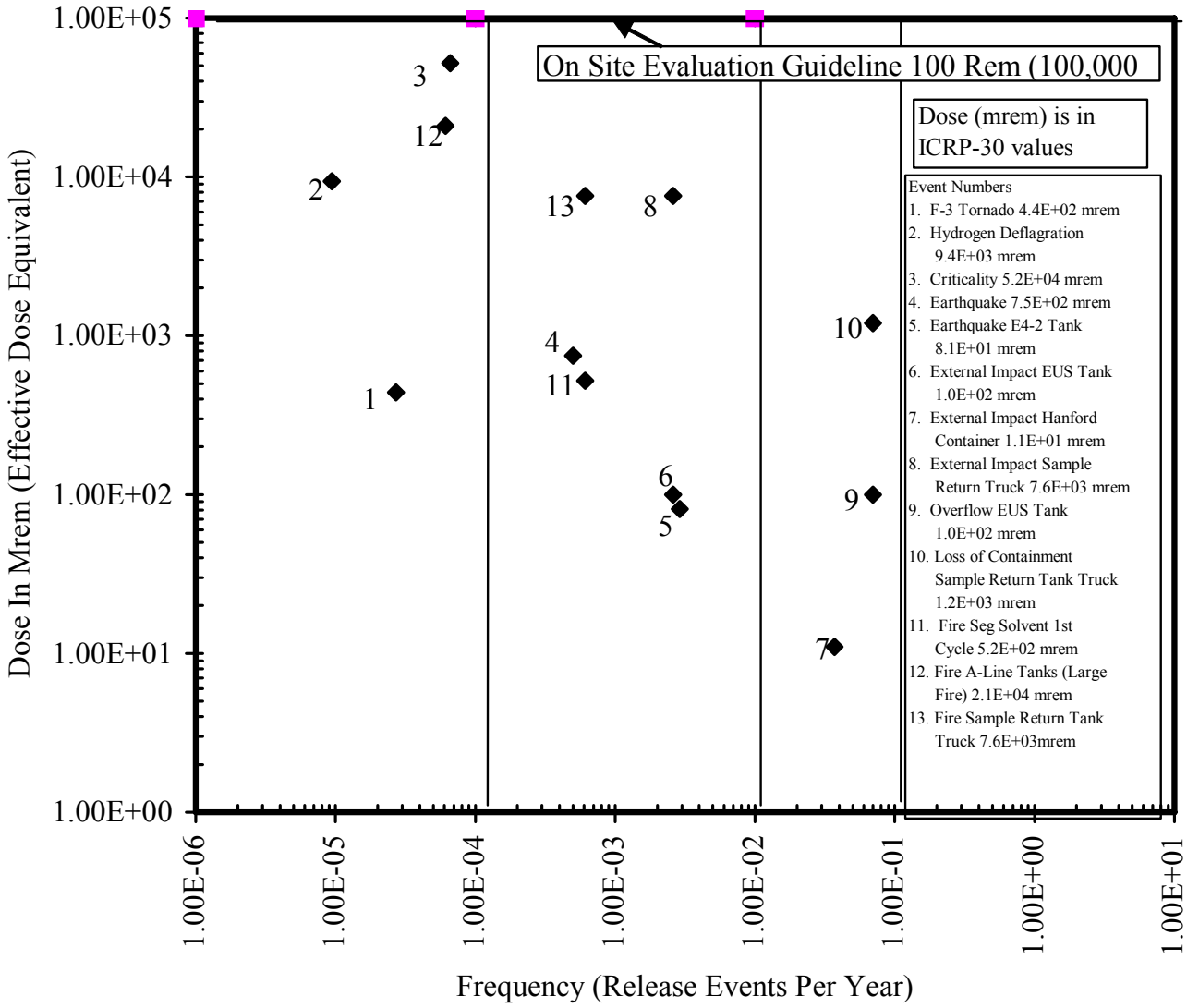

A.2.9 REFERENCES

1. H-Area Outside Facilities Safety Analysis Report. DPSTA–200–10 SUPP 11, Rev. 1. E. I. Dupont du Nemours Company. Aiken, SC. January, 1993.

2. Williams, J.C. Input Data for the Outside Facilities H–Area SAR Addendum 1 Revision (U). NMS–SDG–96–0043. Westinghouse Savannah River Company. Aiken, SC. July 26, 1996.

3. Y–SYD–H–00002, Revision 2B. HEU Blend Down Project System Design Description for LEU Production/Loading Segment. Westinghouse Savannah River Company. Aiken, SC. December 2001.

4. Boiler and Pressure Vessel Code Section VIII Division 1, Rules for Construction of Pressure Vessels. American Society of Mechanical Engineers. 1992.

5. Tran, T.M. Preliminary Hazards Analysis, H Canyon. WSRC–TR–95–0035, Rev. 4. Westinghouse Savannah River Company. Aiken, SC. February 2005.

6. Hope, E.P. Consequences of SAR Accidents for Depleted Uranium Processing (U). S–CLC–H–00491. Westinghouse Savannah River Company. Aiken, SC. July 1996.

7. Thompson, E.A. H–Canyon Outside Facilities Consequence Analysis (U). S–CLC–H–00680, Rev 0. Westinghouse Savannah River Company. Aiken, SC. February 1999.

8. Yeung, M.R. HEU Blend Down Process H–Area Outside Facilities Accident Analysis. S–CLC–H–00844. Westinghouse Savannah River Company. Aiken, SC. December 2001.

9. Salyer, W.D. H–Area Outside Facilities Fire Accident Analysis for HEU Blend Down Process. S–CLC–H–00900. Westinghouse Savannah River Company. Aiken, SC. December 2001.

10. Chanin, D.I., J. L. Sprung, L. T. Ritchie, and H–N Jow. MELCOR Accident Consequence Code System (MACCS) Volume 1. User's Guide. NUREG/CR–4691 (SAND86–1562). Sandia National Laboratory. Albuquerque, NM. 1990.

11. Rollstin, J.A., D. I. Chanin, and H–N Jow. MELCOR Accident Consequence Code System (MACCS) Volume 3. Programmer's Reference Manual. NUREG/CR–4691 (SAND86–1562). Sandia National Laboratory. Albuquerque, NM. 1990.

12. Jow, H–N, J. L. Sprung, J. A. Rollstin, L. T. Ritchie, and D. I. Chanin. MELCOR Accident Consequence Code System (MACCS) Volume 2. Model Description. NUREG/CR–4691 (SAND86–1562). Sandia National Laboratory. Albuquerque, NM. 1990.

13. Chanin, D.I., J. A. Rollstin, J. Foster, and L. Miller. MACCS Version 1.5.11.1: A Maintenance Release of the Code. NUCREG–CR–6059 (SAND92–2146). Sandia National Laboratory. Albuquerque, NM. 1993.

14. Methodology Manual for Nuclear Processes Safety Analysis, Rev. 2 (U). WSRC–TM–90–13. Westinghouse Savannah River Company. Aiken, SC. May 1992.

15. Hamby, D.M. Environmental Dose Assessment Manual (U). WSRC–IM–91–1. Westinghouse Savannah River Company. Aiken, SC. December 1991.

16. McKeel, C.A. NPH Analysis of IEU Vertical Storage Tanks (U). T–CLC–H–00302, Rev.0. Westinghouse Savannah River Company. Aiken, SC. December 1996.

17. Lux, C.R. Frequency of a Hydrogen Explosion In TRR Storage Tanks (U). S–CLC–H–00422, Rev. 0. Westinghouse Savannah River Company. Aiken, SC. February, 1996.

18. East, J.M. F–Canyon Outside Facilities Radiological Source Term and Consequence Analysis (U). S–CLC–F–00293, Rev. 0. Westinghouse Savannah River Company. Aiken, SC. December 1998.

19. Edwards, R.C. Consequence Analysis for HAWTT Fire in OF–H (U). S–CLC–H–01011, Rev. 0. Westinghouse Savannah River Company. Aiken, SC. October 2003.

20. Hope, E.P. Increased EUS Tank Dose Potential from U–232. S–CLC–H–00954, Rev.0. Westinghouse Savannah River Company. Aiken, SC. July 2002.

H–Canyon
Safety Analysis Report

Safety Analysis
H–Canyon & Outside Facilities H-Area Accident Analysis for Packaged Waste
Addendum 3, Revision 2

March 2007

SAVANNAH RIVER SITE
Aiken, SC 29808 • www.srs.gov

PREPARED FOR THE U.S. DEPARTMENT OF ENERGY UNDER CONTRACT NO. DE-AC09-96SR18500

A.3 H-CANYON & OUTSIDE FACILITIES H–AREA ACCIDENT ANALYSIS FOR PACKAGED WASTE

A.3.1 SUMMARY

This addendum evaluates the consequences of applicable Safety Analysis accidents in support of waste repackaging activities.

Savannah River Site (SRS) has Transuranic (TRU) waste currently stored in large metal containers referred to as Large Steel (Black) Boxes (LSBs). The LSBs will be shipped from SRS Solid Waste Management Facilities (SWMF) to H-Canyon for repackaging into Standard Large Boxes (SLBs) or to a location outside H-Canyon for lag storage. The LSBs from lag storage will be brought into H-Canyon for repackaging. The use of Standard Waste Boxes (SWBs) is not expected for this repackaging effort. Use of SWBs will need to be evaluated to ensure that their use is bounded by this evaluation. The repackaging effort will entail removing waste, assumed to be primarily plywood boxes that contain various forms of waste, from the LSB and repackaging the waste in SLBs for either direct shipment to SWMF or lag storage and subsequent shipment to SWMF. Though most of the waste in the LSBs is containerized in plywood boxes, some loose or bagged waste may be encountered during repackaging.

Low Level Waste (LLW) containers are also generated as a result of routine H-Canyon activities. These waste containers are temporarily placed in storage outside of the H-Canyon awaiting shipment to the proper treatment or disposal facility.

Table A.3.1–1 summarizes the consequence and frequency analysis results for postulated events and risks associated with handling, repackaging, and temporarily storing waste. The analysis demonstrates that handling, repackaging, and temporarily storing waste pose no undue risk to the public, the facility or onsite workers, and the environment. Table A.3.1-1 includes values for the Maximally Exposed Offsite Individual (MOI) and the Onsite Occupationally Exposed Person (OEP) at 100 meters (m) for postulated events occurring both outside and inside the H-Canyon. Doses calculated in this Addendum use International Commission on Radiological Protection (ICRP) – 68 and 72 based dose factors.

Table A.3.1–1 Summary Table of Bounding Risks from H–Area Packaged Waste

ACCIDENT	LOCATION	CONSEQUENCE (mrem)	FREQUENCY (/yr)	RISK (mrem/yr)	RECEPTOR
Fire	Outside the H-Canyon	4.6E+01	1.0E-03	4.6E-02	MOI
		8.0E+03	1.0E-03	8.0E+00	OEP 100 Meters
	Inside the H-Canyon	1.2E-01	1.0E-03	1.2E-04	MOI
		2.0E+01	1.0E-03	2.0E-02	OEP 100 Meters
Liquid Spill	Outside the H-Canyon	1.3E+01	1.0E-02	1.3E-01	MOI
		5.4E+03	1.0E-02	5.4E+01	OEP 100 Meters
	Inside the H-Canyon	3.3E-02	1.0E-02	3.3E-04	MOI
		1.4E+01	1.0E-02	1.4E-01	OEP 100 Meters
Impact Events (including tornado and NPH)	Outside the H-Canyon	1.3E+01	1.0E-02	1.3E-01	MOI
		5.4E+03	1.0E-02	5.4E+01	OEP 100 Meters
	Inside the H-Canyon	3.3E-01	1.0E-02	3.3E-03	MOI
		1.4E+02	1.0E-02	1.4E+00	OEP 100 Meters

A.3.2 FACILITY DESCRIPTION AND ACCIDENT INITIATORS

A.3.2.1 GENERAL PROCESS DESCRIPTION INFORMATION

Waste Containers Temporarily Placed in Storage at OF-H

Waste containers are not permanently stored outside of the H-Canyon. As waste is generated, it is segregated, packaged, and placed in temporary storage awaiting shipment to the proper treatment or disposal facility. The inventory of waste containers typically consists of LLW containers (e.g., Sealands, B-25s, B-12s, roll pans, and pot boxes) and Transuranic Waste (TRU) containers (e.g., SLBs and LSBs). The source term for the LLW waste is insignificant when compared to the source term contained in the LSBs and SWBs, and will not be further considered in this analysis. (Note: In 2005 an LSB (BB69) was discovered to have been staged at OF-H for several years. This container contains waste that is contaminated with plutonium and was dispositioned in USQ-HCA-2005-00615 [Ref. 17]).

SRS has TRU waste that is currently stored in LSBs that will be shipped to H-Canyon for repackaging into WIPP approved Standard Large Boxes so that the waste can be ultimately shipped offsite to a permanent storage facility. This repackaging effort will require the staging of LSBs and SLBs in the OF-H to facilitate this activity. The repackaging process is described in detail in the CHAP report (Ref 16).

A.3.2.1.1 Accident Initiators

Bounding accidents as identified in the CHAP Report (Ref. 16) that could result in a radioactive material or hazardous chemical (e.g., Pu-238) release and that are evaluated in this addendum include:

- Spills (Loss of confinement)
- Deflagrations
- Impact Events (includes Earthquake and NPH)
- Fire

A.3.3 ANALYSIS METHODOLOGY

A.3.3.1 PROCESS SOURCE TERM

This addendum evaluates the consequences of applicable packaged waste accidents using a source term limit of 1600 Plutonium Equivalent Curies (PEC-239) based on shipper values.

A.3.3.2 SOURCE TERM INPUT DATA AND ASSUMPTIONS

A.3.3.2.1 SOURCE TERM INPUT DATA

- The combined total maximum inventory evaluated for LSBs and SLBs, both inside and outside the Canyon is 1600 PEC-239. The maximum allowable inventory of 1600 PEC-239 includes any combination of lag storage outside H-Canyon and an LSB being repackaged in the H-Canyon Truckwell, including LSB No. 69.

- LSBs contain contaminated combustible packaged waste, as well as large contaminated metal components such as ventilation ducting, fans, and glovebox components too big to fit in standard 55-gallon drums (Ref. 2). The bounding ARFs x RFs for solid combustible packaged waste or non-combustible waste as appropriate were selected for postulated accident conditions:
  1. ARFs and RFs for combustible solid waste (Ref. 3):
     - Free fall spill (packaged) – ARF x RF = 1.0E-04
     - Thermal Stress (fire) – ARF x RF = 5.0E-04
  2. ARFs and RFs for non-combustible solid waste:
     - Free fall spill (packaged – Ref. 2) – ARF x RF = 1.0E-03
     - Thermal Stress (fire – Ref. 3) – ARF x RF = 6.0E-05
- LSBs with an inventory greater than the H-Canyon criticality safety limit (450 FGE-239) are not candidates for repackaging and will not be received.

- Only one LSB or equivalent content is repackaged at a time in the H-Canyon (Ref. 13).

- The design of the lag storage area will meet the requirement from Reference 13 to prevent flooding due to water from unusually heavy rainfalls.

A.3.3.2.2 SOURCE TERM ASSUMPTIONS

The following are assumptions used in the evaluation. Since the unmitigated accident consequences do not exceed the evaluation guidelines for either the collocated worker or the offsite public, specific H–Canyon TSR level controls are not required to protect these assumptions. However, at 5.4E+01 rem, the unmitigated consequences for the impact event inside the canyon to the collocated worker are assumed to challenge the onsite evaluation guidelines and existing H–Canyon programmatic controls and confinement systems were identified as controls to protect the Facility and Collocated workers. Most of these assumptions rely upon actions completed by the SWMF before the LSBs are shipped to H–Canyon and are therefore initial conditions for H-Canyon. As good engineering and operations practices, H-Canyon should implement procedural controls to support the assumptions.

- LSB handling activities will comply with the existing H-Canyon criticality program. Therefore, the evaluation of criticality hazards is not necessary in this analysis.

  The H-Canyon criticality program is a Technical Safety Requirement (TSR) programmatic control. The criticality safety limit for storage of waste containers is 700 FGE-239 (Ref. 13). The H-Canyon TSR designates a criticality safety limit of 450 FGE-239 (Ref. 9), which controls the maximum allowable inventory of an LSB that can be received for repackaging. By limiting the Pu-239 equivalent loading to less than 450 FGE-239, criticality is considered incredible in the H-Canyon. Thus, by maintaining the limit below 450 FGE-239, criticality is considered incredible in the containers (LSBs and SLBs).

- Deflagration in the headspace of vented LSBs or SLBs will not occur during movement, storage, or repackaging activities. Prior to lag storage or repackaging activities, H-Canyon shall verify that the LSBs are vented and sample data is available that demonstrates the LSB headspace is less than 10% of LEL. Repackaged SLBs shall be verified to be vented prior to closure of the SLB.

- Vented LSBs have been shown to be non-flammable (Ref. 12, 19, 20). all LSBs brought to h-canyon must be vented to verify that they are non-flammable prior to repackaging activities or movement to lag storage. Hydrogen deflagration is not credible for containers meeting filter ventilation design as analyzed in References 6, 11, and 14. additionally, prior to being accepted by H-Canyon, LSBs will have sample data that indicates the headspace is less than 10% LEL.

- All repackaged SLBs will have at least one filter vent installed to prevent the build-up of hydrogen. filter vents authorized for use by the SWMF in the SLBs have a minimum hydrogen diffusivity of 1.65e-04 moles/second/mole fraction (Ref. 14). Based on this minimum hydrogen diffusivity through the filter vents, Reference 14 has demonstrated that one filter vent is sufficient to remove the hydrogen generated by 2400 PEC. the LSB and SLBs as received or packaged will have at least one installed filter vent and are limited to a maximum of 1600 PEC-239. therefore, the accumulation of hydrogen above flammable concentrations in an LSB or SLB is not a credible hazard.

- Removal of the TRU waste from the LSB effectively eliminates the source of the flammable gas; therefore, verification of the filter vents is not required for transfers of empty LSBs from H-Area to SWMF.

- Each SLB shipped out of H-Canyon will have a maximum of 800 PEC-239 (Ref. 11, 18). The SLB inventory limit is an assumption from Reference 11 and protects a SWMF limit. SWMF will not send an LSB with greater than 800 PEC–239 to limit the SLBs to less than 800 PEC. Waste from each LSB will be repackaged into SLBs and removed from the H-Canyon Truckwell prior to introduction of an additional LSB.

- Each LSB shipped to H-Canyon or placed in the lag storage area and each SLB transferred from H-Canyon to the lag storage area or shipped to the SWMF shall be limited to less than the SWMF CSL of ≤430 FGE-239 (Ref. 11), although H-Canyon has been evaluated to a higher CSL of 450 FGE-239 (Refs. 7 and 9). The LSB and SLB inventories are bounded by the H-Canyon criticality safety limit inventory for the LSB received for repackaging (450 FGE-239).

- Shipping and lag storage of the SLBs should not release organics in quantities of flammability concern. The primary control is venting. Headspace sampling is defense in depth to ensure the initial repackaged condition is defined before movement.

- Fires result in 20-minute release durations and all other events result in 3-minute release durations. This assumption was based upon the values used in Reference 1. The 20-minute release applies to a fire that initiates either internal or external to an LSB. This is a reasonable bounding assumption based on the fire progression. A 3-minute release for other release mechanisms is the most conservative release duration allowed by the radiological consequence code, MACCS2, used by the SRS.

- LSBs may contain water. SWMF will dewater LSBs to the maximum extent possible prior to transport to H-Canyon (Ref. 4, 5).

- Repackaging activities (removal of inner plywood boxes from the LSB, removal of empty LSB, and packaging of waste in SLBs) will be performed inside the Warm Canyon/Truckwell airlock in H-Canyon. Once repackaged, SLBs will either be shipped directly to SWMF or staged at a lag storage location.

A.3.3.3 RADIOLOGICAL HAZARDS AND POTENTIAL CONSEQUENCES

For radiological consequence determination, dose conversion factors for 3-minute non-buoyant release (30 cm surface roughness) and 20-minute 1 Megawatt sensible heat rate release (worse case release environment of a 60-ft high building and 30 cm surface roughness) of plutonium oxide (Class M) for the onsite receptor are given below in Table A.3.3.3-1 and used in Table A.3.3.3-2 to estimate radiological consequences from postulated accident conditions associated with this activity. For offsite, all releases are conservatively assumed to be non-buoyant releases. These values are the Total Effective Dose Equivalent (TEDE), which includes the sum of the 50-year Committed Effective Dose Equivalent (CEDE) from inhalation and the prompt external exposure from the plume as calculated in Reference 1.

Table A.3.3.3-1 Dose Conversion Factors

Pu-239 Oxide		
Receptor	Rem/PEC-239 (3-min)	Rem/PEC-239 (20-min)
Onsite (100 meter)*	3.4E+01	1.0E+01
Offsite (10.5km)	8.3E-02	5.7E-02

* Dose Conversion Factors are based on ICRP 68/72 using MACCS2 and 50% meteorology.

It should be noted that the onsite and offsite Dose Conversion Factors (DCFs) were derived for E-Area and were obtained from a calculation developed for E-Area (Ref. 1). H-Area is located 11.5 km from the site boundary, farther than the 10.5 km assumed for E Area. The use of H-Area specific DCFs reflecting the farther distance to the site boundary would decrease the calculated offsite doses; however, this decrease is expected to be relatively minor. Considering the low unmitigated doses to the offsite receptor as outlined in CHAP Tables 3.2-2 and 3.2-3 (Ref. 16), the use of the E-Area offsite DCFs is considered appropriate. Additionally, these DCFs are conservative in application to H-Canyon since these factors do not take structural wake effects into account.

CHAP Tables 3.2-2 and 3.2-3 (Ref. 16) provide a bounding unmitigated radiological dose estimate for potential accident conditions that could release radiological material. For facility workers, accident consequences may be estimated qualitatively. The ARF x RF values used in the CHA are conservative and consistent with DOE-HDBK-3010-94 (Ref. 3). For fires, a 20-minute release duration is used assuming a heat release rate of 1 Megawatt and worse case Release Environment. For all other events, a 3-minute duration is used assuming a non-buoyant release. For fires involving the LSBs an ARFxRF of 5.0E-04 is conservatively applied based on the assumption that material inside is combustible waste.

The consequences reported in this Addendum are mitigated consequences for accidents that occur inside H–Canyon and unmitigated consequences for accidents that occur outside H–Canyon. Analytical experience indicates that crediting the penetration factor of the sand filters gives a source reduction factor of approximately 200 for the MOI. Crediting the stack height release gives another source reduction factor of about 2 for the MOI for a total reduction factor of 400 for the MOI. The source reduction factor for any receptor is the same for the sand filters. However, a release from the stack has varying effects to onsite receptors depending upon the point of the plume touchdown. Typically, the source reduction factor from the stack is higher than 2 for the onsite receptors. Therefore, it is conservative to apply the source reduction factor of 400 to both the MOI and onsite receptor at 100 meters. The unmitigated consequences for the events that occur inside H–Canyon (see CHA Table 3.2-2) are, therefore, reduced by a factor of 400 and reported in this addendum as the mitigated consequences for H–Canyon events.

A.3.3.4 CHEMICAL CONSEQUENCES

A.3.3.4.1 Toxic

No significant quantities of toxic chemical hazards are identified. The dominant human health hazard from TRU or mixed TRU waste, including PCB waste, is associated with the radiological components of the waste.

A.3.3.4.2 Contact/Physical Hazards

The waste contained in the LSBs may be RCRA hazardous; however, the waste is not acutely hazardous. Therefore, it is not expected that acute chemical hazards to the worker are present. Based on the low volumes of chemicals expected to be present, hazards associated with chemicals are considered to be standard industrial hazards. Occupational Safety and Industrial Hygiene programs govern the handling of these chemical hazards.

A.3.3.4.3 Mixing

The waste contained in the LSBs or SLBs is solid material generated from a common process; therefore, chemical compatibility is not an issue.

A.3.4 ACCIDENT FREQUENCIES

The accidents identified in Section A.3.1 were examined to determine the appropriate frequencies for use in this SAR Addendum. Table A.3.4–1 lists the frequencies for each accident. Following the table is a short discussion of each of these frequencies.

Table A.3.4–1 Packaged Waste Accident Frequencies

Accident	Frequency (/year)
Fire	1.0E-03
Liquid Spill	1.0E-02
Impact Events (including tornado and NPH)	1.0E-02

A.3.4.1 FIRE

The frequency level of a fire for packaged waste has been evaluated (Ref. 16) to be Unlikely. A frequency of 1.0E-03/yr is chosen as a reasonable frequency for this range (i.e., 1.0E-04 $\leq$ f < 1.0E-02/yr). The 1.0E-03/yr is chosen as a reasonable mitigated or reduced frequency range based on the programmatic controls and conduct of operations implemented as part of H-Canyon and OF-H operations. These programs reduce the frequency of potential accidents and the midpoint of the Unlikely range is a reasonable and acceptable frequency based on the programmatic controls and the operating experience.

A.3.4.2 LIQUID SPILL

The frequency level of a spill for packaged waste has been evaluated (Ref. 16) to be Anticipated. A frequency of 1.0E-02/yr is chosen as a reasonable frequency for this range (i.e., f $\geq$ 1.0E-02/yr). The 1.0E-02/yr is chosen as a reasonable mitigated or reduced frequency range based on the programmatic controls and conduct of operations implemented as part of H-Canyon and OF-H operations. These programs reduce the frequency of potential accidents and the low end of the Anticipated range is an acceptable frequency based on the programmatic controls and the operating experience.

A.3.4.3 IMPACT EVENTS (INCLUDING TORNADO AND NPH)

The frequency level of an impact event for packaged waste has been evaluated (Ref. 16) to be Anticipated. A frequency of 1.0E-02/yr is chosen as a reasonable frequency for this range (i.e., f

≥ 1.0E-02/yr). The 1.0E-02/yr is chosen as a reasonable mitigated or reduced frequency range based on the programmatic controls and conduct of operations implemented as part of H-Canyon and OF-H operations. These programs reduce the frequency of potential accidents and the low end of the Anticipated range is an acceptable frequency based on the programmatic controls and the operating experience. Since the frequency of a design basis tornado or earthquake is much lower than 1.0E-02, this is a conservative and bounding frequency for these type events.

A.3.5 ACCIDENT CONSEQUENCES

The information in this introduction to Section A.3.5 applies to all of the accident consequences reported in the sub–sections below. For all of the accident consequences reported below, all of the radiological consequences are below the EGs for the MOI (25 rem) and the OEP (100 rem). The EGs for the MOI are not challenged. Although the CHAP report (Ref. 16) determined the risk ranking for all events for all receptors to be Category B events requiring only facility controls, the unmitigated consequences for postulated releases are assumed to challenge the minimum EGs required to establish Safety Significant (SS) defense–in–depth controls to protect the offsite public as defined in WSRC E7 Manual Procedure 2.25. Therefore, currently credited H–Canyon programmatic controls and confinement barriers are credited with providing a Safety Significant function to prevent or mitigate potential accident consequences to the onsite receptors.

A.3.5.1 FIRE

The consequences outside of H-Canyon for fire in the packaged wastes are 4.6E+01 mrem for the MOI and 8.0E+03 mrem for the OEP at 100 meters. The consequences of a fire inside H-Canyon in the packaged wastes are 1.2E-01 mrem for the MOI and 2.0E+01 mrem for the OEP at 100 meters.

A.3.5.2 LIQUID SPILL

The consequences outside of H-Canyon for a spill from the packaged wastes are 1.3E+01 mrem for the MOI and 5.4E+03 mrem for the OEP at 100 meters. The consequences of a spill inside H-Canyon from the packaged wastes are 3.3E-02 mrem for the MOI and 1.4E+01 mrem for the OEP at 100 meters.

A.3.5.3 IMPACT EVENTS (INCLUDING TORNADO AND NPH)

The consequences outside of H-Canyon of impact events on packaged wastes are 1.3E+01 mrem for the MOI and 5.4E+03 mrem for the OEP at 100 meters. The consequences of an impact event inside of H-Canyon on packaged wastes are 3.3E-01 mrem for the MOI and 1.4E+02 mrem for the OEP at 100 meters.

A.3.6 RADIOLOGICAL DOSES AND RISKS

The following tables address releases from accidents outside and inside H-Canyon . Releases that occur inside H-Canyon are protected by the H-Canyon structure and the Exhaust Ventilation System. This will reduce the unmitigated consequences by a factor of approximately 400 to the MOI and somewhat higher to the onsite worker. Therefore, the unmitigated consequences are significantly reduced by the H-Canyon structure and the H-Canyon Exhaust Ventilation System.

The dose and risk due to fires are shown in Table A.3.6-1; liquid spills are shown in Table A.3.6-2; and impact events are shown in Table A.3.6-3.

Table A.3.6–1 Dose and Risk Due to Fire

Table A.3.6–1A Dose and Risk to Offsite Maximum Individual Due to a Fire Outside of the H-Canyon

Unit Operation	Frequency (per year)	DOSE MOI (EDE, MREM)	Risk (mrem/yr)
Packaged Wastes	1.0E-03	4.6E+01	4.6E-02

Table A.3.6–1B Dose and Risk to Offsite Maximum Individual Due to a Fire Inside of the H-Canyon

Unit Operation	Frequency (per year)	DOSE MOI (EDE, MREM)	Risk (mrem/yr)
Packaged Wastes	1.0E-03	1.2E-01	1.2E-04

Table A.3.6–1C Dose and Risk to OEP at 100 Meters Due to a Fire Outside of the H-Canyon

Unit Operation	Frequency (per year)	Dose OEP 100 Meters (EDE, mrem)	Risk (mrem/yr)
Packaged Wastes	1.0E-03	8.0E+03	8.0E+00

Table A.3.6–1D Dose and Risk to OEP at 100 Meters Due to a Fire Inside of the H-Canyon

Unit Operation	Frequency (per year)	Dose OEP 100 Meters (EDE, mrem)	Risk (mrem/yr)
Packaged Wastes	1.0E-03	2.0E+01	2.0E-02

Table A.3.6–2 Dose and Risk Due to a Spill

Table A.3.6–2A Dose and Risk to Offsite Maximum Individual Due to a Spill Outside of the H-Canyon

Unit Operation	Frequency (per year)	Dose MOI (EDE, mrem)	Risk (mrem/yr)
Waste Containers	1.0E-02	1.3E+01	1.3E-01

Table A.3.6–2B Dose and Risk to Offsite Maximum Individual Due to a Spill Inside of the H-Canyon

Unit Operation	Frequency (per year)	Dose MOI (EDE, mrem)	Risk (mrem/yr)
Waste Containers	1.0E-02	3.3E-02	3.3E-04

Table A.3.6–2C Dose and Risk to OEP at 100 Meters Due to a Spill Outside of the H-Canyon

Unit Operation	Frequency (per year)	Dose OEP 100 Meters (EDE, mrem)	Risk (mrem/yr)
Waste Containers	1.0E-02	5.4E+03	5.4E+01

Table A.3.6–2D Dose and Risk to OEP at 100 Meters Due to a Spill Inside of the H-Canyon

Unit Operation	Frequency (per year)	Dose OEP 100 Meters (EDE, mrem)	Risk (mrem/yr)
Waste Containers	1.0E-02	1.4E+01	1.4E-01

Table A.3.6–3 Dose and Risk Due to Impact Events

Table A.3.6–3A Dose and Risk to Offsite Maximum Individual Due to Impact Events Outside of the H-Canyon

Unit Operation	Frequency (per year)	Dose MOI (EDE, mrem)	Risk (mrem/yr)
Waste Containers	1.0E-02	1.3E+01	1.3E-01

Table A.3.6–3B Dose and Risk to Offsite Maximum Individual Due to Impact Events Inside of the H-Canyon

Unit Operation	Frequency (per year)	Dose MOI (EDE, mrem)	Risk (mrem/yr)
Waste Containers	1.0E-02	3.3E-01	3.3E-03

Table A.3.6–3C Dose and Risk to OEP at 100 Meters Due to Impact Events Outside of the H-Canyon

Unit Operation	Frequency (per year)	Dose OEP 100 Meters (EDE, mrem)	Risk (mrem/yr)
Waste Containers	1.0E-02	5.4E+03	5.4+01

Table A.3.6–3D Dose and Risk to OEP at 100 Meters Due to Impact Events Inside of the H-Canyon

Unit Operation	Frequency (per year)	Dose OEP 100 Meters (EDE, mrem)	Risk (mrem/yr)
Waste Containers	1.0E-02	1.4E+02	1.4+00

A.3.7 CHEMICAL HAZARDS

No significant quantities of toxic chemical hazards are identified. The dominant human health hazard from TRU or mixed TRU waste including PCB waste is associated with the radiological components of the waste. The waste contained in the LSBs may be RCRA hazardous; however, the waste is not acutely hazardous. Therefore, it is not expected that acute hazards to the worker due to chemicals are present. Based on the low volumes of chemicals expected to be present, hazards associated with chemicals are considered to be standard industrial hazards. Occupational Safety and Industrial Hygiene programs govern the handling of these chemical hazards. The waste contained in the LSBs or SLBs is solid material generated from a common process; therefore, chemical compatibility should not be an issue.

A.3.8 HAZARDS TO OPERATING PERSONNEL

The repackaging of waste in the H-Canyon Truckwell does not introduce any new hazards. Existing hazards to operating personnel are addressed in the current H–Canyon and 211–H Outside Facilities SAR and can be divided into radiological and non-radiological (chemical) hazards.

The radiological hazards associated with repackaging the waste include surface contamination, airborne contamination, clothing contamination, skin contamination, nasal contamination, assimilation, and radiation. The facility Radiation Protection Program is conducted in compliance with the WSRC Radiological Controls Manual 5Q. The Radiological Control Operations Organization provides oversight of the Radiation Protection Program to prevent contamination or assimilation and assure that the radiation exposure of facility personnel is maintained As Low As Reasonably Achievable.

Chemical hazards are discussed above. An Industrial Hygiene (IH) Program, described in WSRC Industrial Hygiene Manual 4Q, is implemented to achieve compliance with DOE Orders and DOE–prescribed IH standards for controlling occupational exposures to specific chemical, physical, and biological hazards.

A.3.9 REFERENCES

1. Thoman, D. C., Parametric Consequence Calculations of Unit Curie ^{239}Pu and ^{3}H Releases for Various Sensible Heat Rates (U), S-CLC-E-00196, Rev. 0, Washington Safety Management Solutions, Aiken, SC, May 2006.

2. Solid Waste Management Facility Safety Analysis Report. WSRC-SA-22, Rev. 5, Westinghouse Savannah River Company, Aiken, SC, January 2005.

3. Airborne Release Fraction/Rates and Respirable Fractions for Nonreactor Nuclear Facilities, Volume I – Analysis of Experimental Data. DOE-HDBK-3010-94, U. S. Department of Energy, Washington, DC.

4. Onsite Safety Assessment of SRS-1, SRS-2, and SRS-A Containers, S-OSA-G-00017, Rev. 1, Westinghouse Savannah River Company, Aiken, SC, March 2003.

5. D. Hoang, First Time Use Technical Review of the Carbon Steel Burial Boxes in E-Area for On-site Transfer, S-FTU-G-00015, Rev. 1, Washington Savannah River Company, Aiken, SC, May 2006.

6. D. T. Hobbs and J. W. Jerrell, Calculation of Hydrogen Concentrations in Transuranic Waste Burial Boxes (U), WSRC-RP-89-762, Westinghouse Savannah River Company, Aiken, SC, November 1989.

7. Deleted.

8. 29 CFR 1910.146, Permit-Required Confined Spaces, US Department of Labor, Occupational Safety Administration.

9. H-Canyon Technical Safety Requirements, WSRC-TS-96-19, Rev. 11, Westinghouse Savannah River Company, Aiken, SC, May 2006.

10. N. M. Askew, Hydrogen Diffusion in Transuranic Waste Burial Boxes (U), X-CLC-H-00547, Rev. 1, Westinghouse Savannah River Company, Aiken, SC, June 2005.

11. Haddock, R. R., Consolidated Hazards Analysis for the Movement of Large Steel Boxes and Receipt of Repackaged Waste in SLBs (U), WSRC-TR-2005, 00247, Rev. 1, Washington Savannah River Company, Aiken, SC, June 2006.

12. Bullington, M. F., Sampling of Black Boxes for VOCs Final Report, OBU-SWO-2005-00051, Westinghouse Savannah River Company, Aiken, SC, August 2005.

13. Lloyd Hedlund., Nuclear Criticality Safety Evaluation: Repackaging of Large Steel (Black) Boxes in H-Canyon, N-NCS-H-00202, Rev. 1, Washington Safety Management Solutions, Aiken, SC, July 2006.

14. Bullington, M. Maximum PEC vs. Number of Filter Vents Installed, S-CLC-E-00156, Rev. 5, Washington Savannah River Company, March 2007.

15. OBU-TRU-2005-00105., Basis for 0.05 Loose Contamination, Washington Savannah River Company, Aiken, SC, September 26, 2005.

16. Tran, T. M. Consolidated Hazards Analysis for the Repackaging of Waste Stored in Large Steel Boxes for H-Canyon, WSRC-TR-2004-00609, Rev. 4. Washington Savannah River Company, Aiken, SC, July 2006.

17. Williams, J. C. Evaluation of Black Box #69 Stored in OF-H, USQ-HCA-2005-00615, Rev. 0. Washington Savannah River Company. Aiken, SC. August 2005.

18. OBU-SWO-2005-00058, Rev. 0. Physical and Radiological Inventories to be Stored in the Standard Large Box-2, Washington Savannah River Company, Aiken, SC, August 15, 2005.

19. NI-SWMF-05-005, Potential for Flammable Non-Drum TRU Waste Containers, Washington Savannah River Company, Aiken, SC, May 2005.

20. OBU-TRU-2006-00065, Non-Flammability of Vented Black Boxes, Washington Savannah River Company, Aiken, SC, June 2006.

H–Canyon
Safety Analysis Report

Documented Safety Analysis

Super Kukla Metals Processing
Addendum 4, Revision 0

March 2007

SAVANNAH RIVER SITE
Aiken, SC 29808 • www.srs.gov

PREPARED FOR THE U.S. DEPARTMENT OF ENERGY UNDER CONTRACT NO. DE-AC09-96SR18500

A.4 SUPER KUKLA PROCESSING

A.4.1 EXECUTIVE SUMMARY

A.4.1.1 BACKGROUND AND MISSION

The Super Kukla Prompt Burst Reactor operated at the Nevada Test Site from 1964 to 1978. The reactor was used for neutron irradiation of test specimens, including material used in weapons. The reactor configuration included rods, disks, and rings made of a uranium alloy. The uranium components (referred to as Super Kukla Metals, which is a NNSA Metal) are transported to H-Canyon, processed in the dissolvers, and dispositioned following dissolution. Requirements from codes and standards, including DOE regulations, orders, and guidance documents affecting the processing of Super Kukla Metals are addressed in Section 6.5.2 of the H-Canyon SAR. Savannah River Site characteristics (e.g., geographic, demographic, meteorological) are also addressed in the SAR. This Addendum is organized using the format and content guidance in DOE-STD-3009-94 (Ref. 1).

During the course of the development of many of the documents to support this Addendum, the Super Kukla Metal material evaluated was referred to as NNSA Metal. For example, the CHA for Super Kukla (WSRC-TR-2006-000360) is titled "Consolidated Hazard Analysis for the H-Canyon Dissolution of NNSA Metal (U)," the NCSE for Super Kukla (N-NCS-H-00206) is titled "Nuclear Criticality Safety Evaluation: Dissolving Uranium-Molybdenum Alloy (Super Kukla) in H-Canyon Dissolvers With the 10-Well Insert" and the DCA for Super Kukla (N-NCS-H-00207) is titled "Nuclear Criticality Safety Evaluation: DCA for Dissolution of NNSA Metals (Super Kukla) in H-Canyon." The material evaluated in these documents is the Super Kukla Metal discussed in this Addendum.

A.4.1.2 SAFETY ANALYSIS OVERVIEW

The analysis presented in this Addendum is limited to the receipt, transport, and handling of the Super Kukla Metal, since these activities are not evaluated in the SAR. This Addendum will also establish the appropriate CSL and the necessary air purge rates for the Super Kukla Metal in the dissolvers. This Addendum documents the technical basis for the controls that ensure that a hydrogen deflagration and a criticality are prevented during dissolution operations. After dissolution, the subsequent disposition of the uranium solutions is performed using existing processes and methods; the analysis of these operations in the SAR is still applicable. The Super Kukla Metals CHA demonstrated that the Super Kukla Metals source term is bounded by the existing SAR source term; therefore, downstream processing accidents involving Super Kukla Metals are not evaluated in this Addendum (Ref. 2). The operations analyzed in this Addendum are briefly described below and in Section A.4.2.2.

The Super Kukla Metal is shipped in 6M or ES-3100 containers to H-Canyon and received at the South Loading Dock. The shipping containers contain up to 5 kg U-235. The amount of U-235 per shipment is limited to 20 kg U-235 (which is a Safeguards and Security concern). For

conservatism, 50 kg of U-235 was analyzed in this Addendum. The 6M or ES-3100 containers are moved from the transport vehicle to the loading dock and transported to the Hot Crane Maintenance Area (HCMA) or vestibule. In the HCMA or vestibule, the 6M or ES-3100 containers are opened and the carbon steel cans containing the Super Kukla Metal are loaded into stainless steel charging bundles. The charging bundles are charged into the dissolver. After dissolution of each charge, the dissolver will be probed to verify dissolution. At the completion of a dissolver batch, the solution will be sampled to verify that the dissolution is complete. Following dissolution, the dissolved material will be processed through 1st and 2nd cycle solvent extraction, with the uranium sent to the Highly Enriched Uranium (HEU) blend down program.

The CHAP was used to analyze the hazards associated with the processing of the Super Kukla Metals (Ref. 2). The CHAP hazard evaluation was performed in accordance with the methodology outlined in Section A.4.3.2. The majority of the information required to perform the Hazard Evaluation (HE) was obtained through reviews of facility documentation, facility walk downs, and discussions with facility personnel. The process areas and activities were analyzed against the event categories (E-1 through E-7), postulating event scenarios for the applicable hazardous energy sources and hazardous material sources. The identified event scenarios cover the spectrum of possible events for a given hazard from small consequence events for which existing procedures or equipment is acknowledged to provide adequate protection, to reasonable worst-case conditions, in terms of both event frequency and consequence magnitude.

The results of these activities are documented in the CHA for Super Kukla Metal (Ref. 2) and in Section A.4.3.2, which identifies the hazardous events identified for the receipt, transport, movement, and dissolver loading of Super Kukla Metals. This hazard evaluation process resulted in the identification of 22 potential events involving hazards and/or hazardous materials. The risk rank for each postulated event was determined by locating the event on the risk matrix (Table A.4.8-3), based upon the consequence level and frequency level of the event. The risk ranks are documented in the CHA for Super Kukla Metal (Ref. 2).

Of the 22 events identified in the hazard evaluation, 21 of the events do not have an unmitigated risk rank of “A1,” “A2,” or “A3” for the Facility Worker (FW), Co-located Worker (CW), or the public. This means that the unmitigated consequences of these events did not exceed or challenge the FW, CW, or public high consequence levels shown in Table A.4.8-2 and do not require further quantitative analysis and the selection of SC or SS controls to assure that the guidelines are not challenged. One event postulated in the CHA, an inadvertent criticality, had an unmitigated Risk Rank of “A3,” with potential high radiological consequences to the FW.

Six events resulted in an unmitigated Risk Rank of “B,” with potential moderate uranium chemical consequences to the FW. These six events have designated Facility Controls to protect the FW from the chemical hazards of a uranium release and were judged to not challenge the risk rank “A” criteria.

A.4.1.3 SAFETY ANALYSIS CONCLUSIONS

This Addendum evaluates the hazards and provides the necessary controls to ensure safe operation for the processing of Super Kukla Metals in H-Canyon. The operations to receive, transport, and load the Super Kukla Metal material into the dissolving charging bundle and the dissolution of the Super Kukla Metal are evaluated and controls are selected to ensure that these operations can be conducted safely without undue risk to the facility and onsite workers, the offsite public, and the environment. Downstream of the dissolvers, the Super Kukla Metal solution will be processed using normal H-Canyon processing. This Addendum demonstrates that loading the Super Kukla Metal into the dissolver charging bundle and dissolution of the Super Kukla Metal material poses minimal risk to all receptors.

A.4.2 SUPER KUKLA METALS PROCESS DESCRIPTION

A.4.2.1 INTRODUCTION

This section of the Addendum describes the Super Kukla Metals process. For a description of the H-Canyon facility structure, process systems and constituent components, confinement systems, safety support systems, utilities, and auxiliary systems and support systems, refer to the H-Canyon SAR.

A.4.2.2 SUPER KUKLA METALS PROCESS DESCRIPTION

The Super Kukla Prompt Burst Reactor operated at the Nevada Test Site from 1964 to 1978. Super Kukla produced an intense pulse of neutrons and gamma radiation. The reactor was used for neutron irradiation of test specimens, including material used in weapons. The reactor configuration included rods, disks, and rings made of a uranium alloy. All the uranium components of the reactor were manufactured at Y-12 during the 1960s. The uranium components (referred to as Super Kukla Metal) are characterized as miscellaneous unirradiated materials (Ref. 3). The Super Kukla Metal will be transported to H-Canyon and processed in the dissolvers. Downstream of the dissolvers, the Super Kukla Metal solution will be processed using normal H-Canyon processing.

Super Kukla Metal is shipped in 6M or ES-3100 containers to the H-Canyon South Loading Dock. Each 6M or ES-3100 container contains one to three carbon steel cans. The shipping containers contain up to 5 kg U-235. The amount of U-235 per shipment is limited to 20 kg U-235 (which is a Safeguards and Security concern). For conservatism, 50 kg of U-235 is analyzed in this Addendum. The 6M or ES-3100 containers are removed from the transport vehicle and manually moved (e.g., with drum movers) to the HCMA or vestibule using the south freight elevator. In the HCMA or vestibule, operators open the 6M or ES-3100 containers and remove the carbon steel cans. The carbon steel cans containing the Super Kukla Metal are loaded into charging bundles in the HCMA. Unloading the shipping containers and inserting the carbon steel cans in the bundles is a manual operation performed by H-Canyon operators. A loading rack is present to prop the Super Kukla Metal charging bundles in a position for ease of

inserting the cans into the bundles. If the shipping containers can not be unloaded when they are received, they may be left sealed and staged in the HCMA until processed.

The Super Kukla Metal charging bundles are stainless steel tube-like structures. The charging bundles are charged into the ten well insert and placed by the Hot Canyon crane into either the 6.1D or the 6.4D dissolver. A single 6.4D dissolver charge is up to 53.1 kg of U-235; a single 6.1D dissolver charge is up to 25.3 kg of U-235. The dissolution time for each dissolver is determined by SRNL (Ref. 4). After dissolution of each charge, the dissolver will be probed to verify dissolution. At the completion of a dissolver batch, the solution will be transferred to Tank 8.3 or Tank 7.4 and sampled for accountability. Typically, solutions from Tank 8.3 are sent to Tank 11.2, Evaporator Feed Tank for evaporation in the 11.3 Evaporator. Due to the attained concentrations in the dissolver, Evaporator 11.3 will be bypassed allowing solutions from Tank 11.2 to be sent directly to the 10.2 Strike Tank. The solution from the 10.2 Strike Tank will be processed through 1st and 2nd cycle solvent extraction, with the uranium sent to the HEU blend down program. .

A.4.3 HAZARD AND ACCIDENT ANALYSIS

A.4.3.1 INTRODUCTION

This section of the Addendum describes the process used to systematically identify and assess process-related, external, and Natural Phenomena Hazard (NPH) events. The hazards are evaluated to determine the potential for the identified hazards to develop into accidents.

A.4.3.2 HAZARDS ANALYSIS

A.4.3.2.1 Hazards Analysis Methodology

Refer to the Section 8.0 of the SAR for general information regarding the methodology used to identify and characterize hazards. Specific information provided in this section is included to show the variations in the methodology used to develop the Super Kukla Metal CHA compared to hazards analyses methodology discussed in Section 8.0 of the SAR.

A.4.3.2.1.1 HAZARD IDENTIFICATION

Hazards were systematically identified by evaluating the hazardous materials and energy sources associated with the receipt, handling, and dissolution of the Super Kukla Metals in the H-Canyon facility. The existing facility PHA (Ref. 5) identified the hazards within H-Canyon where the Super Kukla Metal material is dissolved and processed. For charging and dissolving the Super Kukla Metal in dissolvers 6.4D and 6.1D, the hazards identified in Table B-34 (Dissolving) of the H-Canyon PHA were reviewed. No new hazards were identified by the CHA Team for dissolving Super Kukla Metal.

For receiving 6M or ES-3100 containers, transporting the containers to the HCMA, and unloading the containers, the H-Canyon PHA does not evaluate these activities. The receipt and unloading areas (South Loading dock) and transport route to the HCMA were walked down to identify hazards. The CHA documents the hazard identification process for these activities/locations (Ref. 2).

A.4.3.2.1.2 HAZARD CATEGORIZATION

The H-Canyon facility has been classified as a Hazard Category 2 facility using the methodology presented in DOE-STD-1027-92 (Ref. 6). Refer to the SAR, Section 8.1 for a discussion of the hazard categorization of the H-Canyon facility. Processing of Super Kukla Metals does not change the Hazard Category.

A.4.3.2.1.3 HAZARD EVALUATION

The HE is the primary focal point of the HA. Hazards were characterized in the context of actual facility operations and processes by considering feasible release mechanisms (or events), estimating initiating event frequency, estimating consequences of the release, identifying preventive and mitigative features, and assigning a risk bin. The purpose of the HE was to ensure a comprehensive assessment of the hazards associated with processing Super Kukla Metals and to focus attention on those events that pose the greatest risk to the public, CW, and the FW. The majority of information required to perform the HE was obtained by reviews of facility documentation and CHAP Team expertise. The HE was performed in accordance with the Consolidated Hazards Analysis Process (CHAP) Program and Methods Manual (Ref. 7).

The scope of the HE included the following:

- Receipt, handling, and dissolution of Super Kukla Metals in H-Canyon dissolvers 6.1D and 6.4D.
- Natural phenomena (e.g., earthquakes, tornadoes, straight-line winds), external events (e.g., aircraft and vehicular impact), and nuclear criticality (where applicable).
- The entire spectrum of possible events for a given hazard in terms of both frequency and consequence levels.
- Hazards addressed by other programs and regulations (e.g., Process Safety Management Standard, Occupational Safety and Health Act, Resource Conservation and Recover Act, Department of Transportation, and Environmental Protection Agency) were included only if loss of control of the hazard results in a chemical or radiological release.

The scope of the HE did not include the following:

- Willful acts, such as sabotage.
- Hazards routinely accepted by the public (These were screened during the common hazard screening process prior to conducting the HE).

Event scenarios for each aspect of Super Kukla Metal processing were developed wherever a potential exists for a release of hazardous energy and/or material. The scenarios developed covered the entire spectrum of possible events for a given hazard, from small consequence events, for which procedures or equipment are acknowledged to provide adequate protection, to worst-case events. Event categorization, identification of event cause(s), assignment of initiating event/event frequency and unmitigated/mitigated consequence levels, identification of mitigative and preventive features, screening for common hazardous events, and risk binning were conducted during the HE. The primary goal of the HE was to identify and evaluate specific events associated with hazardous material releases.

The HE is presented in tabular form and includes the following information:

- Event Description
- Causes
- Preventive features (design and administrative)*
- Frequency level (unmitigated and mitigated)*
- Mitigative features (design and administrative)*
- Consequences (unmitigated and mitigated)*
- Risk ranking (unmitigated and mitigated)*

Features of the Super Kukla Metals CHA HE tables (listed above) annotated with a "*"differ from the HE tables in the existing H-Canyon PHA (Ref. 5) and are discussed below.

A.4.3.2.1.3.1 Preventive Features

A preventive feature is any feature that is readily expected to act to prevent the release of hazardous material to an unwanted location, thus, reducing the frequency of the associated release event. The selection of such features was made without regard to any possible pedigree of the feature such as procurement level or current classification. These included engineered features (e.g., SSCs), ACs (e.g., procedures, policies, programs), natural phenomena (e.g., ambient conditions, buoyancy, gravity), or inherent features (e.g., physical or chemical properties, location, elevation) operating individually or in combination. Preventive features are those that are assumed to be operable prior to an event and may not be required to be operable during the event or post event. Any facility design and/or administrative SC or SS features that were credited with reducing the frequency of a postulated event are required to be identified in the HE (Ref. 2) by **bold/underlined text**. Facility controls (DiD features) used to further reduce the frequency of a postulated event are identified in the HE by text in *italics*. No SC or SS preventive features were identified in the Super Kukla Metals HE tables.

A.4.3.2.1.3.2 Frequency Level

The HE includes estimates of the frequency levels. Event frequency evaluation was a qualitative or semi-quantitative process that involved assigning a frequency level to each event in the HE

tables based on the event's root cause(s). Frequency levels and descriptions are based on DOE-STD-3009-94 (Ref. 1). Sources of frequency information included generic initiator databases, existing safety documentation, natural phenomena frequency levels, engineering calculations, failure rate data, and facility expert opinion. The frequency level was recorded in the HE tables according to the Table A.4.8-1 lettering scheme. Erring in the conservative direction from best-estimate values was used to accommodate uncertainties in the frequency levels.

For the mitigated HA, credit was taken for preventive features identified in the HE, NCSEs, and other evaluations prepared to support Super Kukla Metal processing.

A.4.3.2.1.3.3Mitigative Features

Mitigative features are any features that were expected to reduce the consequences associated with the release of hazardous material. The identification of such features is made without regard to any possible pedigree of the feature, such as procurement level or current classification. Mitigative features are those that are assumed to be operable during an event or after the event, and were not required to be operating prior to the event initiation. Therefore, mitigative features are capable of withstanding the environment of the event. These include engineered features (e.g., SSCs), ACs (e.g., procedures, policies, programs), natural phenomena (e.g., ambient conditions, buoyancy, gravity), or inherent features (e.g., physical or chemical properties, location, elevation) operating individually or in combination. Any facility design or administrative SC or SS features that were credited with reducing the consequences of a postulated event are required to be highlighted in the HE by **bold/underlined text**. Facility controls (DiD features) used to further reduce the consequences of a postulated event are identified in the HE by text in *italics*. No SC or SS mitigative features were identified in the Super Kukla Metals HE tables (Ref. 2).

A.4.3.2.1.3.4Consequences

Event consequences were documented by specifying the impact on the receptors (described below) and the criteria used to assess the impact. Any potential impact of consequences on other systems is also documented in this column of the HE tables. For HE purposes, consequences to human receptors were defined as the dose or exposure to the specified receptors. Consequences were a function of the type and characteristics of the hazard, the quantity of material released, the release mechanism, relative location of the release, and any relevant transport characteristics. Consequences were determined from (1) simple ST calculations, (2) existing safety documentation, and/or (3) qualitative assessment. The CHA team utilized its discretion, expertise, and knowledge of facility hazards to select one or more of the above methods appropriate for consequence determination. Unlike frequency levels, which cover two orders of magnitude in one frequency bin of the binning matrix, consequence levels sometimes span less than one order of magnitude. Thus, a more refined effort is required to determine the appropriate consequence level for a given event and receptor. Much like frequency evaluation, erring in the conservative direction was encouraged, especially for those events with consequences at the high end of a given level.

The evaluation used a qualitative or semi-quantitative assessment based on the quantities of radionuclides and chemicals released as a result of each postulated event. In addition, these quantities were dependent on the release fractions associated with each combination of material form and event type. The semi-quantitative consequence evaluation used bounding release fractions.

Consequences were evaluated at various receptor locations to assess health effects of the postulated release. Table A.4.8-2 defines the terms used to describe the radiological and chemical consequence levels used in the Super Kukla Metals HE tables for the specified receptor locations. Receptors are the FW, CW, and the public.

- FWs are workers immediately adjacent to, or in, the occupied area of the hazard. "Occupied area of the hazard" refers to the area within the last possible means of physically controlling the hazard or controlling access to the hazard (i.e., building, fence, permanent chain with multiple warning signs). FWs equate to the Functional Classification (FC) Receptors 1 and 2 as described in WSRC Procedure Manual E7, Procedure 2.25 (Ref. 8).
- CWs are outside the occupied area of the hazard. CWs equate to the FC Receptor 3 as described in WSRC Procedure Manual E7, Procedure 2.25 (Ref. 8).
- The public is everyone outside the site boundary at the time of the event.

These receptors were consistent with those used in the SRS Functional Classification Methodology Manual (Ref. 9).

For the unmitigated consequence determination, crediting an SSC or AC for its mitigative properties was discouraged.

For mitigated HA purposes, consequences were defined as the dose or exposure at specified receptor locations based upon mitigated release of hazardous material. Consequences were a function of the type and characteristics of the hazard, the quantity of hazardous material released, the release mechanism, relative location of the release, and any relevant transport characteristics. The mitigated consequence levels were derived from existing facility accident analyses and consequence analyses and the collective judgment of the CHA team.

A.4.3.2.1.3.5 Risk Ranking

The risk ranking was provided as a measure of the risk associated with the event. The HE tables provide, for each of the postulated release events, a bin category representing risk at each receptor location. Using event frequency and consequence levels, the events were binned in a matrix to assess relative risk. The objective of risk binning was to focus attention on those events that pose the greatest risk to the public and the onsite receptors. As discussed earlier, compliance with the Functional Classification Methodology Manual is maintained.

Table A.4.8-3 is the risk binning matrix for the three receptor locations considered in the CHA (i.e., FW, CW, and public). In this table, a rectangular matrix in frequency-consequence space defines the bins.

Unmitigated events falling in Region “A1” due to radiological release require controls (SC for the public and SS for the workers) and are highly recommended for additional Levels of Control for all receptors as specified in E7 Procedure 2.25 (Ref. 8). Unmitigated events falling in Region “A1” due to chemical release or prompt fatality require SS controls and are highly recommended for additional Levels of Control as specified in E7 Procedure 2.25. The desired result is that the mitigated consequence is moved well into the “B” region, and possibly the “C” region, or the event is prevented.

Unmitigated events falling in Region “A2” due to radiological release require controls (SC for the public and SS for the workers) and are recommended for additional Levels of Control for all receptors as specified in E7 Procedure 2.25. Unmitigated events falling in Region “A2” due to chemical release or prompt fatality require SS controls and are recommended for additional Levels of Control as specified in E7 Procedure 2.25. The desired result is that the mitigated consequence is moved well into the “B” region and, possibly the “C” region, or the event is prevented.

Unmitigated events falling in Region “A3” due to radiological release require controls (SC for the public and SS for the workers) and are considered for additional Levels of Control for CW or public as specified in E7 Procedure 2.25. Unmitigated events falling in Region “A3” due to chemical release or prompt fatality require SS controls and considerations for additional Levels of Control as specified in E7 Procedure 2.25. The desired result in the mitigated consequence is from “High” to “Low” or “Negligible.”

Events having moderate “B” consequences that challenge “A” region consequences require SC (public) or SS (worker) controls. Otherwise, events falling in Region “B” require Facility Controls. The desired result is that the mitigated combination of consequence and frequency is moved toward, and possibly into, the “C” region.

Events falling in Region "C" are not considered for controls. However, there may be events in this region that require the addition of Facility Controls because the frequency is higher than desired, or the occurrence of the uncontrolled event is unacceptable to management in any event, or the uncontrolled event is unacceptable for programmatic or political reasons.

Neither SC nor SS controls were identified in CHA for processing the Super Kukla Metal. Facility Controls were identified for events involving fires (Ref. 2).

A.4.3.2.1.4 HAZARDS ANALYSIS INPUTS AND ASSUMPTIONS

A.4.3.2.1.4.1 Inputs

The following inputs formed the basis for the Super Kukla Metal CHA:

1. Super Kukla Metal is received on the South Loading Dock in 6M or ES-3100 containers.
2. Super Kukla Metal is comprised of a uranium/molybdenum alloy. The material is approximately 90% uranium (at approximately 20% enrichment) and 10% molybdenum.

WSRC-TR-2006-00407 lists the weight percentages of the uranium component of Super Kukla Metal (Ref. 3). Two values are provided in Table A.4.3-1: the first is the isotopic composition obtained from actual analysis of the material (Ref. 3); the second defines the bounding isotopic composition assumed in this analysis.

Table A.4.3-1 Super Kukla Metal Isotopic Content

Uranium Isotope	Actual Weight Percent	Analysis Weight Percent
U-234	~0.1%	2.0%
U-235	~20.1%	21%
U-236	~0.1%	2.0%
U-238	79.7%	75%

3. Each 6M or ES-3100 container contains one to three carbon steel cans. Each shipping container contains up to 5 kg of U-235. Based on an approximate enrichment of 21%, this equates to approximately 24 kg of uranium in a 6M or ES-3100 container of Super Kukla Metal.
4. Super Kukla Metal contains a 0.005-inch nickel plating on all non-cut surfaces.
5. Depending on the attractiveness level of the Super Kukla Metal received by H-Canyon, Safeguards and Security will dictate the maximum amount of U-235 received during a shipment. If a "C" attractiveness level is assigned, then up to 20 kg of U-235 will be received in a shipment; if a "D" attractiveness level is assigned, up to 50 kg of U-235 will be received. To cover both attractiveness levels, the analysis was completed for 50 kg U-235 to be received in a shipment (this bounds both possibilities). Using a U-235 weight percent of 21%, this equates to approximately 238 kg of Super Kukla Metal. Prior to receiving an additional shipment, the Super Kukla Metal from the previous shipment will be charged to the dissolver. This is a Safeguards and Security requirement.
6. Dissolver 6.4D is charged with material containing up to 53.1 kg of U-235; dissolver 6.1D is charged with material containing up to 25.3 kg of U-235.
7. Airborne Release Fraction (ARF) and Respirable Fraction (RF) products (ARF x RF) for postulated radiological and chemical releases involving uranium metal were obtained from Section 4.0, *Solids*, of DOE-HDBK-3010-94 (Ref. 10), and are shown in Table A.4.3-2:

Table A.4.3-2 - ARF x RF Products

Event	ARF x RF
Thermal Stress – Oxidation of Uranium Metal Mass	1E-3
Blast Effects – Uranium Metal	No significant airborne release postulated
Free Fall Spill/Impaction Stress – Uranium Metal	No significant airborne release postulated

8. Airborne release of surface contamination on the Super Kukla Metal could occur as a result of blast effects or free fall spill/impaction stress (Ref. 10). The amount of surface contamination expected is minimal; therefore, no significant airborne release was postulated from surface contamination for these type events. Reference 10 recommends an ARF/RF of 1E-2 for fires that result in the free fall spill of molten metal uranium. Though the consequences for this type release would be a factor of 10 higher than evaluated in the CHA, no fires were postulated to occur that would result in this type of release based on the configuration of the uranium in shipping containers.

9. Table A.4.3-3 provides Total Effective Dose Equivalents (TEDEs) for the 100 m CW and MOI (public) for a unit curie release for 3-minute and 20-minute release durations. The TEDE values are reported for the 50th percentile dose level without regard to sector for the 100 m worker and the 95th percentile dose level without regard to sector for the MOI. These TEDE values were derived using a deposition velocity of 1 cm/s and were obtained from Reference 11 and were used as the basis for control selection. For reference purposes, 100 m worker TEDE values for the 95th percentile dose level are also included in Table A.4.3-3 (Ref. 12).

Table A.4.3-3 – TEDE Values

Isotope	Release Duration	TEDE (rem/Ci)		
		100 m Worker 50th Percentile	100 m Worker 95th Percentile	MOI 95th Percentile
U-234	3 minute	5.7E+00	2.6E+01	1.3E-02
U-234	20 minute	4.0E+00	1.8E+01	9.5E-03
U-235	3 minute	5.1E+00	2.4E+01	1.2E-02
U-235	20 minute	3.5E+00	1.7E+01	8.4E-03
U-236	3 minute	5.3E+00	2.5E+01	1.2E-02
U-236	20 minute	3.7E+00	1.7E+01	8.6E-03

Isotope	Release Duration	TEDE (rem/Ci)		
		100 m Worker 50th Percentile	100 m Worker 95th Percentile	MOI 95th Percentile
U-238	3 minute	4.8E+00	2.2E+01	1.2E-02
U-238	20 minute	3.2E+00	1.6E+01	8.0E-03

10. The specific activities of the Super Kukla Metal uranium isotopes are listed in Table A.4.3-4 (Ref. 13):

Table A.4.3-4 - Uranium Isotope Specific Activities

Uranium Isotope	Specific Activity (Ci/g)
U-234	6.24E-03
U-235	2.16E-06
U-236	6.47E-05
U-238	3.36E-07

11. Temporary Emergency Exposure Limits (TEELs) for uranium were obtained from Reference 14. With the exception of the recommended averaging time, TEELs 1, 2, and 3 have the same definitions as the equivalent ERPG. The TEEL-1 value for uranium listed in Reference 14 is 0.6 mg/m^3; the TEEL-2 value is 1 mg/m^3; the TEEL-3 value is 10 mg/m^3.

12. To estimate chemical consequences for releases involving Super Kukla Metal, the following three-minute atmospheric transport plume dilution factors (χ /Q values) for the 100 m CW and MOI were used. The χ /Q values are reported for the 50th percentile level for the 100 m worker and the 95th percentile level for the MOI. These χ /Q values were used as the basis for control selection. For reference purposes, 100 m worker χ /Q values for the 95th percentile dose level are also included in Table A.4.3-5.

Table A.4.3-5 – χ/Q Values

χ /Q Values (s/m^3)		
100 m Worker 50th Percentile	100 m Worker 95th Percentile	MOI 95th Percentile
6.5E-04	2.9E-03	1.6E-06

A.4.3.2.1.4.2 Assumptions

No assumptions were made.

A.4.3.2.2 Hazards Analysis Results

As discussed in Section A.4.3.2.1, the HA consists of three basic analytical activities: hazard identification, hazard categorization, and hazard evaluation. This section provides a discussion of the results of performing these activities.

A.4.3.2.2.1 HAZARD IDENTIFICATION

For charging and dissolving the Super Kukla Metal in dissolvers 6.4D and 6.1D, the hazards identified in Table B-34 (Dissolving) of the H-Canyon PHA (Ref. 5) were reviewed. No new hazards were identified for dissolving Super Kukla Metal.

For receiving 6M or ES-3100 containers, transporting the containers to the HCMA, and unloading the containers, the H-Canyon PHA does not evaluate these activities. Appendix A of the Super Kukla Metals CHA contains the hazard identification tables for these activities/locations (Ref. 2).

A.4.3.2.2.1.1 Radiological Inventory

Super Kukla Metal is comprised of a uranium/molybdenum alloy. The material is approximately 90% uranium (at approximately 21% enrichment) and 10% molybdenum. Table A.4.3-1 lists the weight percentages of the uranium component of Super Kukla Metal. Two values are provided: first is the isotopic composition obtained from actual analysis of the material; the second defines the bounding isotopic composition used in this analysis.

Each 6M or ES-3100 container contains one to three carbon steel cans. Each shipping container contains up to 5 kg of U-235. Based on an approximate enrichment of 21%, this equates to approximately 24 kg of uranium in a 6M or ES-3100 container of Super Kukla Metal.

Depending on the attractiveness level of the Super Kukla Metal received by H-Canyon, Safeguards and Security will dictate the maximum amount of U-235 received during a shipment. If a “C” attractiveness level is assigned, then up to 20 kg of U-235 will be received in a shipment; if a “D” attractiveness level is assigned, up to 50 kg of U-235 will be received. Assuming a U-235 weight percent of 21%, this 50 kg of U-235 equates to approximately 238 kg of Super Kukla Metal. Prior to receiving an additional shipment, the Super Kukla Metal from the previous shipment will be charged to the dissolver. This is a Safeguards and Security requirement.

Dissolver 6.4D may be charged with material containing up to 53.1 kg of U-235; dissolver 6.1D may be charged with material containing up to 25.3 kg of U-235.

A.4.3.2.2.1.2Chemical Inventory

Chemicals associated with Super Kukla Metal dissolution are nitric acid and possibly mercuric nitrate. Both chemicals have been previously analyzed, and typical facility chemical inventories are outlined in the SAR.

For natural or depleted uranium or uranium with uranium enrichment <10%, the toxic hazard of uranium as a heavy metal is of greater concern than the radiological hazard. The toxicological hazard from uranium results from transport of inhaled, soluble uranium compounds to the kidneys. For uranium with enrichments >10%, the radiological hazard is of concern and the solubility of the uranium in interstitial lung fluids determines the critical organ (Ref. 10). For conservatism, an evaluation of the toxicological effects of a release was evaluated using a maximum uranium inventory of 238.1 kg.

Per Reference 14, the TEEL-1 value for molybdenum is 30 mg/m^3; the TEEL-2 value is 50 mg/m^3; the TEEL-3 value is 500 mg/m^3. The molybdenum TEELs are much higher than the TEELs for uranium. Since the Super Kukla Metals material is only 10% molybdenum and the TEEL concentrations for molybdenum are much higher than for uranium, controls to protect against uranium chemical consequences are more than adequate to protect the workers from any chemical consequences resulting from a molybdenum release.

A.4.3.2.2.2 HAZARD EVALUATION

The HE is performed in accordance with the methodology provided above. The majority of the information required to perform the HE was obtained through reviews of facility documentation, facility walk downs, and discussions with facility personnel. The process areas and activities were analyzed against event categories (e.g., fire, explosion, loss of confinement), postulating event scenarios for the applicable hazardous energy sources and hazardous material sources. The identified event scenarios cover the spectrum of possible events for a given hazard from small consequence events for which existing procedures or equipment is acknowledged to provide adequate protection, to reasonable worst-case conditions, in terms of both event frequency and consequence magnitude.

The results of these activities, documented in the Super Kukla Metals CHA, identify all events applicable to receiving, transporting, and loading Super Kukla Metals and provide the results of a HE (risk rank) of each event (Ref. 2).

This evaluation process resulted in the identification of 22 potential events involving hazards and/or hazardous materials. The risk rank for each postulated event was determined by locating the event on the risk binning matrix, based upon the consequence level and frequency level of the event. The risk ranks are documented in the Super Kukla Metals CHA HE Tables (Ref. 2).

Of the 22 events identified in the HE, 21 of the events do not have an unmitigated risk rank of “A1,” “A2,” or “A3” for the FW, CW, or the public. This means that the unmitigated consequences of these events did not exceed or challenge the FW, CW, or public high consequence levels shown in Table A.4.3-9 and do not require further quantitative analysis and

the selection of controls to assure that the evaluation guidelines are not challenged. One event, inadvertent criticality, was evaluated to have an unmitigated Risk Rank of "A3," with high radiological consequences to the FW.

Of the 22 events identified in the HE, 15 events have an unmitigated risk rank of "C" for the FW, CW, and the public. This means that these 15 events do not require SC, SS, or Facility Controls to be designated to protect the FW, CW, and public. Six of the remaining events have a risk rank of "C" for the CW and public and an unmitigated risk rank of "B" for the FW from a toxic chemical release (uranium). These six events do not require SC, SS, or Facility Controls to be identified for the CW and the public, however, Facility Controls were identified to protect the FW from the chemical consequences of the uranium release. These Facility Controls were evaluated to reduce the mitigated chemical release to a risk rank of "C."

The remaining event, inadvertent criticality (event number SK-13), was evaluated to have an unmitigated risk rank of "A1." Event SK-13 of Appendix B of the CHA, postulated a criticality during the receipt, handling, and unpacking of 6M or ES-3100 containers. A criticality results in High unmitigated consequences (Risk Region "A1") to the FW. Criticality Safety evaluated this criticality scenario and determined that it was incredible; therefore, no preventive or mitigative SSCs or ACs are required (Ref. 15).

The following sections provide a brief discussion of the event scenarios documented in the Super Kukla Metals CHA HE Tables (Ref. 2). Events falling into Region "B" of the risk matrix require Facility Controls, unless they challenge the EG or SS criteria outlined in Reference 8. If the Region "B" events challenge the EG or SS criteria, then they are considered for SC or SS controls. None of the Region "B" events challenge the EG or SS criteria.

Region "C" events fall below the DOE-STD-3009-94 evaluation criteria and do not require the selection of SC or SS controls. Even though these events do not require SC or SS controls, they can result in undesirable consequences to the worker, the environment, or to facility equipment and operability. For this reason, Facility Controls are listed as outlined in SCD-11 (Ref. 7). These controls are not considered to be part of the safety basis, and management of these controls is left to the facility's discretion, however, they are noted as non-credited items and should be addressed during safety basis implementation activities as well as during the Unreviewed Safety Question process for changes to the facility.

During the course of the hazard evaluation for transporting and handling 6M or ES-3100 containers, a number of standard industrial hazards (SIHs) were identified. SIHs are hazards routinely encountered in general industry and for which national codes and standards, or site standards, exist to guide safe design, control, and operation. None of the SIHs were considered unique and all are hazards that are routinely encountered at SRS. The SIHs identified were hazards associated with the handling and movement of shipping containers, transportation, and overhead lifts. Control of these SIHs will be addressed during the Assisted Hazards Analysis (AHA) process.

A.4.3.2.2.2.1 Loading Dock, Container Transfer Routes, and Unpacking

E-1 Fire:

Events SK-1 and SK-2

Event SK-1

Event SK-1 is a fire involving the transport vehicle occurring at the South Loading Dock involving 238 kg of enriched uranium in 6M or ES-3100 containers resulting in a release of radioactive material. This event may result from a combination of vehicle fuel or flammable materials and an ignition source such as an electrical short or other unidentified ignition source. The MAR is 50 kg of U-235. The unmitigated frequency of this event is Anticipated. The potential unmitigated radiological consequences of such an event are Negligible to the FW, CW, and public receptors. The potential unmitigated chemical consequences are Negligible to the CW and public, and Moderate to the FW. The Emergency Response (evacuation and/or sheltering) and Fire Protection Programs (alarms, fire protection procedures) are designated as Facility Controls to mitigate the consequences to the FW from the chemical release. With these items and features in place, chemical consequences to the FW due to a release are evaluated to be Negligible.

Event SK-2

Event SK-2 is a fire involving the 6M or ES-3100 containers occurring at the South Loading Dock, along the transfer route, or in the HCMA or vestibules involving 238 kg of enriched uranium resulting in a release of radioactive material. This event may result from a combination flammable materials and an ignition source such as an electrical short, hot work, or portable tools in these areas. The MAR is 50 kg of U-235. The unmitigated frequency of this event is Anticipated. The potential unmitigated radiological consequences of such an event are Negligible to the FW, CW, and public receptors. The potential unmitigated chemical consequences are Negligible to the CW and public, and Moderate to the FW. The Emergency Response (evacuation and/or sheltering) and Fire Protection Programs (alarms, fire protection procedures) are designated as Facility Controls to mitigate the consequences to the FW from the chemical release. With these items and features in place, chemical consequences to the FW due to a release are evaluated to be Negligible.

E-2 Explosion:

Events SKE-3 and SK-4

Event SK-3

Event SK-3 is an external explosion involving the transport vehicle occurring at the South Loading Dock involving 238 kg of enriched uranium in 6M or ES-3100 containers resulting in a release of radioactive material. This event may result from a combination of flammable vapors from the transport vehicle fuel and an ignition source such as an electrical short or other unidentified ignition source. The MAR is 50 kg of U-235. The unmitigated frequency of this event is Unlikely. The potential unmitigated radiological and chemical consequences of such an event are Negligible to the FW, CW, and public receptors. Therefore, specific SC, SS, or Facility Controls are not credited for this event.

Event SK-4

Event SK-4 is an impact from a failed high pressure gas cylinder(s) to the 6M or ES-3100 containers occurring at the South Loading Dock, along the transfer route, or in the HCMA or vestibules involving 238 kg of enriched uranium resulting in a release of radioactive material. This event may result from human error (drop or impact of high pressure gas cylinder) or mechanical failure of the high pressure gas cylinder. The MAR is 50 kg of U-235. The unmitigated frequency of this event is Anticipated. The potential unmitigated radiological and chemical consequences of such an event are Negligible to the FW, CW, and public receptors. Therefore, specific SC, SS, or Facility Controls are not credited for this event.

E-3 Loss of Confinement:

Events SK-5 through SK-9

Event SK-5, SK-6, and SK-8

Event SK-5 is an impact from dropping 6M or ES-3100 container(s) at the South Loading Dock, along the transfer route, or in the HCMA or vestibules involving 238 kg of enriched uranium resulting in a release of radioactive material. Event SK-6 is a drop of an inner container in the HCMA and vestibules involving 24 kg of enriched uranium. Event SK-8 is a drop of a charging bundle in the HCMA and Hot Canyon involving 238 kg of enriched uranium. Event SK-6 is bounded by Events SK-5 and SK-8. These events may result from human error (drop or handling error) or from the failure of lifting/handling equipment. The bounding MAR for SK-5 and SK-8 is 50 kg of U-235 versus 5.0 kg of U-235 for SK-6. The unmitigated frequency of these events are Anticipated. The potential unmitigated radiological and chemical consequences of these events are Negligible to the FW, CW, and public receptors. These events also have the potential to cause physical injury to the FW. However, they are considered to be SIHs that are

covered under existing SRS safety procedures. Therefore, specific SC, SS, or Facility Controls are not credited for these events.

Event SK-7

Event SK-7 is a breach of a 6M or ES-3100 container from an inadvertent discharge of a firearm or maintenance error at the South Loading Dock, along the transfer route, or in the HCMA and vestibules involving 24 kg of enriched uranium resulting in a release of radioactive material. This event may result from human error (unintentional firearm discharge or a drilling/maintenance error). The unmitigated frequency of this event is Anticipated. The potential unmitigated radiological and chemical consequences of this event are Negligible to the FW, CW, and public receptors. This event also has the potential to cause physical injury or death to the FW. However, prevention of this event is covered under existing SRS Safeguards and Security and SRS maintenance safety procedures. Therefore, specific SC, SS, or Facility Controls are not credited for this event.

Event SK-9

Event SK-9 is an impact to the 6M or ES-3100 containers during a transport vehicle accident occurring at the South Loading Dock area or along adjacent roadways involving 238 kg of enriched uranium resulting in a release of radioactive material. This event may result from human error (driver error) or mechanical failure of the transport vehicle. The MAR is 50 kg of U-235. The unmitigated frequency of this event is Anticipated. The potential unmitigated radiological and chemical consequences of such an event are Negligible to the FW, CW, and public receptors. Therefore, specific SC, SS, or Facility Controls are not credited for this event.

<u>E-4 Direct/Personnel Exposure:</u>

Events SK-10 through SK-12

Event SK-10

Event SK-10 is an operator exposure to radiation from the 6M or ES-3100 containers due to inadequate shielding within the container at the South Loading Dock, along the transport route, in the HCMA and vestibules from 24 kg of enriched uranium. This may be caused by a loss or lack of shielding within the container. The unmitigated frequency of this event is Anticipated. The potential unmitigated consequences of this event are Negligible to the FW, CW, and public receptors. Therefore, specific SC, SS, or Facility Controls are not credited for this event.

Event SK-11

Event SK-11 is contamination of a FW during unpackaging of the 6M or ES-3100 containers in the HCMA and vestibules. This could be caused by a tear in personal protective equipment

allowing contamination. The unmitigated frequency of this event is Anticipated. The potential unmitigated consequences of this event are Negligible to the FW, CW, and public receptors. Therefore, specific SC, SS, or Facility Controls are not credited for this event.

Event SK-12

Event SK-12 is exposure of a FW during unpacking of the 6M or ES-3100 containers in the HCMA and vestibules. This could be caused by an unknown failure of the inner container causing an inadvertent exposure to radiation. The unmitigated frequency of this event is Anticipated. The potential unmitigated consequences of this event are Negligible to the FW, CW, and public receptors. Therefore, specific SC, SS, or Facility Controls are not credited for this event.

E-5 Criticality:

Event SK-13

Event SK-13 is a nuclear criticality event that occurs on the South Loading Dock, along the transfer routes, or in the HCMA and vestibules. This may be caused by an accumulation of fissile material into a critical geometry or the addition of moderator (water) from flooding, fire fighting, or rain. The potential consequences of such an event are High to the FW, and Negligible to the CW and public receptors. Criticality Safety evaluated this scenario and determined that it was incredible; therefore, no credited SSCs or ACs are required to prevent or mitigate this criticality scenario (Ref. 15).

E-6 External Events:

Events SK-14 through SK-17

Event SK-14

Event SK-14 is an external fire propagating to the South Loading Dock involving 238 kg of enriched uranium in 6M or ES-3100 containers resulting in a release of radioactive material. This event may result from a nearby forest fire, brush fire, adjacent building fire, or an adjacent vehicle fire or explosion. The MAR is 50 kg of U-235. The unmitigated frequency of this event is Anticipated. The potential unmitigated radiological consequences of such an event are Negligible to the FW, CW, and public receptors. The potential unmitigated chemical consequences are Negligible to the CW and public, and Moderate to the FW. The Emergency Response (evacuation and/or sheltering) and Fire Protection Programs (alarms, fire protection procedures) are designated as Facility Controls to mitigate the consequences to the FW from the chemical release. With these items and features in place, chemical consequences to the FW due to a release are evaluated to be Negligible.

Event SK-15

Event SK-15 is an impact from dropping a load being carried on an external crane onto the South Loading Dock or transport vehicle, damaging the 6M or ES-3100 container(s) involving 238 kg of enriched uranium resulting in a release of radioactive material. These events may result from human error (crane operator error) or from the mechanical failure of lifting/rigging components. The MAR for this event is 50 kg of U-235. The unmitigated frequency of this event is Anticipated. The potential unmitigated radiological and chemical consequences of this event are Negligible to the FW, CW, and public receptors. This event also has the potential to cause physical injury to the FW. However, it is considered to be an SIH that is covered under existing SRS safety procedures. Therefore, specific SC, SS, or Facility Controls are not credited for these events.

Events SK-16 and SK-17

Events SK-16 and SK-17 are impacts and follow on fires from the crash of an aircraft into the South Loading Dock or transport vehicle damaging the 6M or ES-3100 container(s) involving 238 kg of enriched uranium resulting in a release of radioactive material. Event SK-16 involves large commercial or military aircraft and SK-17 involves small (general aviation) aircraft or helicopters. These events may result from human error (pilot error) or from the mechanical failure of the aircraft structures, systems, or components. The MAR for these events is 50 kg of U-235. The unmitigated frequency of SK-16 is Beyond Extremely Unlikely and Extremely Unlikely for SK-17. The potential unmitigated radiological consequences of this event are Negligible to the FW, CW, and public receptors. The potential unmitigated chemical consequences are Negligible to the CW and public, and Moderate to the FW. The Emergency Response (evacuation and/or sheltering) and Fire Protection Programs (alarms, fire protection procedures) are designated as Facility Controls to mitigate the consequences to the FW from the chemical release. This event also has the potential to cause physical injury to the FW. However, an event of this type would be covered under existing SRS emergency responder and safety procedures. With these items and features in place, chemical consequences to the FW due to a release from these events are evaluated to be Negligible.

<u>E-7 Natural Phenomena:</u>

Events SK-18 through SK-22

Events SK-18 and SK-19

Events SK-18 and SK-19 are impacts from flying debris as a result of high wind or tornadoes impacting the 6M or ES-3100 container(s) at the South Loading Dock or in the transport vehicle. The tornado also has the potential to overturn the transport vehicle. These events have the potential of involving 238 kg of enriched uranium with damage to the containers resulting in a release of radioactive material. These events may result from high velocity straight winds or tornadoes. The MAR for these events is 50 kg of U-235. The unmitigated frequency is Anticipated for SK-18 and Extremely Unlikely for SK-19. The potential unmitigated radiological and chemical consequences of this event are Negligible to the FW, CW, and public receptors. This event also has the potential to cause physical injury to the FW. However, an

event of this type would be covered under existing SRS emergency responder and safety procedures. Therefore, specific SC, SS, or Facility Controls are not credited for these events.

Event SK-20

Event SK-20 involves damage to 6M or ES-3100 container(s) at the South Loading Dock, on the transport vehicle, along the transfer route, or in the HCMA and vestibules from impacts due to a seismic event involving 238 kg of enriched uranium resulting in a release of radioactive material. This event may result directly from an earthquake or structures failing in the earthquake with debris falling/impacting the containers and/or the staged transport vehicle. The MAR for this event is 50 kg of U-235. The unmitigated frequency of this event is Unlikely. The potential unmitigated radiological and chemical consequences of this event are Negligible to the FW, CW, and public receptors. This event also has the potential to cause physical injury to the FW. However, an event of this type would be covered under existing SRS emergency responder and safety procedures. Therefore, specific SC, SS, or Facility Controls are not credited for these events.

Event SK-21

Event SK-21 involves damage to 6M or ES-3100 container(s) at the South Loading Dock, or on the transport vehicle from impacts due to a direct lightning strike and follow on fire involving 238 kg of enriched uranium resulting in a release of radioactive material. This event may result from a direct lightning strike impacting the containers and/or the staged transport vehicle followed by a fire. The MAR for this event is 50 kg of U-235. The unmitigated frequency of this event is Beyond Extremely Unlikely. The potential unmitigated radiological consequences of this event are Negligible to the FW, CW, and public receptors. The potential unmitigated chemical consequences are Negligible to the CW and public, and Moderate to the FW. This event also has the potential to cause physical injury to the FW. However, an event of this type would be covered under existing SRS emergency responder and safety procedures. Therefore, the toxicological consequences to the FW due to a release from this event are evaluated to be Negligible.

Event SK-22

Event SK-22 involves damage to 6M or ES-3100 container(s) at the South Loading Dock, or on the transport vehicle from impacts due to flooding involving 238 kg of enriched uranium resulting in a release of radioactive material. This event may result from flooding due to heavy rains. The MAR for this event is 50 kg of U-235. The unmitigated frequency of this event is Beyond Extremely Unlikely. The potential unmitigated radiological consequences of this event are Negligible to the FW, CW, and public receptors. The potential unmitigated chemical consequences are Negligible to the FW, CW, and public. This event also has the potential to cause physical injury to the FW. However, an event of this type would be covered under existing SRS emergency responder and safety procedures. Therefore, specific SC, SS, or Facility Controls are not credited for this event.

A.4.3.2.3 Planned Design and Operational Safety Improvements

There were no operational safety improvements identified during the hazard analysis process.

A.4.3.2.4 Defense-In-Depth

To compensate for potential facility failures, DiD is based on several layers of protection with successive barriers to prevent the release of hazardous materials to the environment. This approach includes measures to protect the public, workers, and the environment from harm in case any of these barriers are not fully effective. Defining DiD as it exists at a given facility is important for determining a safety basis; however, no requirement to demonstrate a particular number of layers of defense is imposed. Those hazardous events that had unmitigated consequences that did not challenge the EG or SS criteria do not have specific DiD identified, but DiD is provided by the features described within the text of Section A.4.3.2.2.2 corresponding to these events, the systems described in Chapter 2 of the SAR, site-wide programs, as well as those worker protection controls specified in the CHA (Ref. 2). The unmitigated consequences of all events identified in the Super Kukla Metals CHA are below the EG and below the SS criteria.

A.4.3.2.4.1 DEFENSE-IN-DEPTH STRUCTURES, SYSTEMS, AND COMPONENTS

Examination of the HE events results in the identification of non-credited SSCs that provide DiD for many of the events. These items are described in the Super Kukla Metals CHA (Ref. 2).

SSCs that are major contributors to DiD or worker safety as determined in the HE are considered for designation as SS SSCs. The designation of DiD design features as SS SSCs is based on the qualitative assessment as discussed above. The consequences from the events evaluated in the HE do not challenge the EG or SS criteria; therefore, SS SSCs are not required, nor designated as DiD. However, certain facility level SSCs (GS or PS) prevent the FW from being exposed to unnecessary hazards. The CHA (Ref. 2) lists SSCs that are designated as Facility Controls with their corresponding HA event (see Section A.4.3.2.2.2).

A.4.3.2.4.2 DEFENSE-IN-DEPTH ADMINISTRATIVE FEATURES

The primary method for providing DiD through Specific Administrative Controls (SAC) or ACs is the development of facility procedures. These facility procedures are lower-tiered documents that implement facility specific and site-wide requirements, and the requirements of DOE Orders. These procedures also ensure safe facility operation and provide additional means of safety control.

The implementation of facility procedures provides the infrastructure for an outer layer of DiD for potential events associated with Super Kukla Metals processing. These programs, and the personnel training associated with development of a thorough understanding of hazards in the workplace, result in a work force that is capable of responding to any accident situation in a manner that mitigates the consequences to individuals at the facility and outside the facility. In

addition, many potential accidents are prevented due to the implementation of facility procedures and personnel training.

A.4.3.2.4.3 TECHNICAL SAFETY REQUIREMENTS

DOE-STD-3009-94 provides basic screening criteria to identify DiD features that may require TSR coverage (Ref. 1). These items are identified in Sections A.4.4 and A.4.5 of this Addendum.

A.4.3.2.5 Worker Safety

Design and administrative features that protect workers associated with Super Kukla Metals processing are listed as "preventive features" and "mitigative features" in the CHA (Ref. 2). Many of the features protecting workers contribute to the DiD of the facility. Any features identified as requiring protection through TSR coverage are identified in Chapter 8 of the SAR.

This section summarizes the major features protecting workers from the hazards of facility operations involving Super Kukla Metals, exclusive of SIH. These features, as outlined in the CHA (Ref. 2), are facility level controls. The major features protecting workers from the hazards of facility operation during Super Kukla Metals processing include the following:

- Fire Protection Program
- Shipping container design (6M or ES-3100)
- Emergency Response Program
- Building structure/H-Canyon ventilation system (for events within H-Canyon)
- Crane design and safety features
- H-Area storm drain system
- Operator training and procedures
- Inspections, maintenance, and surveillance
- H-Area speed limits
- Industrial Hygiene Program
- Radiation Control Program

A.4.3.2.6 Environmental Protection

The primary environmental concern with respect to Super Kukla Metals processing is the release of radionuclides (uranium) to the environment. The HA identifies release pathways in which radionuclides could be released and adversely impact the public, site worker, and the environment. The potential for large material releases is minimized by the design and administrative features that contribute to DiD for Super Kukla Metals processing. These design features and administrative features protect the public, site worker, and the environment and are

discussed in the DiD section. It is appropriate to note that, although there have been no specific accident EGs developed for the environment, protection of the public and site worker as discussed in previous sections also provides de facto protection of the environment. Thus, each of the design and administrative features that contributes to DiD also contributes to environmental protection.

Additional design features not included in the DiD discussion contribute to environmental protection. These design features include the following:

- Location of the H-Canyon in an area where the topography is conducive to minimizing the possibility of water intrusion to the building (design feature).

As a result of the above design features and the DiD discussion, design and operational controls are in place to prevent large releases that could cause significant environmental damage.

A.4.3.2.7 Accident Selection

Based on the DOE-STD-3009-94 (Ref. 1) methodology, HE events whose consequences have the potential to challenge the EG for the public are identified and require further consideration in the accident analysis (Section A.4.3.3) as unique and representative DBA. Other representative events may also be selected, as deemed appropriate, by the CHA team.

None of the unmitigated CHA events in Reference 2 require further consideration in the accident analysis as they do not challenge the EG for the public and are not considered to have significant onsite impact.

The CHA determined that an evaluation of the hydrogen generation rate of the Super Kukla Metal material in the dissolvers is required to determine the adequacy of the existing TSR controls to prevent a hydrogen deflagration (Ref. 2). Section A.4.3.3.1 provides this evaluation. The H-Canyon Super Kukla Metal NCSE (Ref. 16) and DCA (Ref. 15) identified criticality controls required as a result of the criticality evaluation. Section A.4.3.3.2 identifies the necessary criticality control set based on the results of the Super Kukla Metals NSCE/DCA.

A review of the accident scenarios in the SAR (Ref. 17) did not indicate any accident for which new or revised controls are required for the dissolvers for the Super Kukla Metals campaign. The existing analysis in Section 8.0 of the SAR describes all the other potential accidents that could affect the Super Kukla Metal material in the dissolvers and in subsequent processing operations. Any required controls to prevent or mitigate accidents for the dissolvers are in the SAR and TSR and do not need to be included in this Addendum. This Addendum identifies the two accidents, a hydrogen deflagration and an inadvertent criticality, for which the existing SAR and TSR controls were not adequate or require revision to support the Super Kukla Metal campaign. No additional analysis or information on other potential accident scenarios in the dissolvers is required in this Addendum.

A.4.3.3 ACCIDENT ANALYSIS

The accidents to be analyzed in this section are required to be derived from the CHA. Potential accident events identified in the CHA were binned into risk categories based on likelihood of occurrence and consequence. Each risk bin was assigned a risk rank in accordance with DOE-STD-3009-94 (Ref. 1). The standard states that a unique accident analysis should be performed for all hazards that are a major concern in the HA (Risk Rank "A") for the public, and a representative bounding analysis should be performed for all hazards that are a marginal concern in the HA (Risk Rank "B") for the public. Risk Rank "B" events for the public are considered as candidates for the representative bounding analysis. A bounding analysis is performed for all accident types of concern that have the potential to challenge the EG for the public, unless the accident is bounded by a unique accident analysis.

The CHA determined that an evaluation of the hydrogen generation rate of the Super Kukla Metal material is required to determine the adequacy of the existing TSR controls to prevent a hydrogen deflagration in the dissolvers (Ref. 2). Section A.4.3.3.1 provides this evaluation.

The H-Canyon Super Kukla Metal NCSE (Ref. 16) and DCA (Ref. 15) identified criticality controls required as a result of dissolving and downstream processing of the Super Kukla Metal material. Section A.4.3.3.2 identifies the necessary criticality control set based on the results of the Super Kukla Metals NSCE/DCA.

A.4.3.3.1 Explosion - Hydrogen Deflagration Due To Radiolysis

Section 8.3.2.2.3 of the SAR discusses hydrogen deflagration accidents in the dissolvers. The hydrogen generation rate during dissolution operations and from the radiolysis of water is lower for Super Kukla Metals than the materials previously analyzed for dissolution as discussed in the SAR.

Controls to prevent a hydrogen deflagration by maintaining the hydrogen level in the dissolver off–gas to 60% of the LFL (approximately 2.4 vol% hydrogen in dry air at 25 °C) under normal dissolution operations for other materials are contained in the Section 8.0 of the SAR and the TSR (Ref. 17, 18). The SAR and TSR also contain controls to maintain the hydrogen concentrations to less than 25% of the LFL when dissolved radioactive material solutions are temporarily stored in the dissolvers prior to being transferred to other tanks for subsequent processing. The controls are an off–gas purge flow rate during active dissolution (LCO 3.1.9), a minimum purge flow rate from the dip tube instruments during a storage mode (LCO 3.1.8), and a minimum nitric acid concentration SAC for both scenarios (SAC 5.7.2.12.a) in the TSR (Ref. 18). An evaluation of the adequacy of, or need for, these controls to prevent a hydrogen deflagration in the dissolvers during the Super Kukla Metals campaign is provided.

The SAR analysis shows that when active dissolution operations are occurring, the water vapor in the dissolver vapor space will inert the atmosphere so that a hydrogen deflagration is not a credible event. Therefore, no specific controls are required to prevent a hydrogen deflagration in the dissolver vapor space during active dissolution operations for the SRS fuel analyzed in the

SAR or for the Super Kukla Metal material. The reason is that the vapor space will be saturated with water vapor because of the boiling aqueous solution.

During dissolution operations, the dissolver condenser is operating to condense the water vapor and other condensable vapors and return them to the dissolver. Returning the condensed water to the dissolver pot maintains the liquid level in the pot, which enhances dissolution and also prevents a criticality scenario in the pot from over-concentration of the fissile isotopes in the pot. The uncondensed gases and vapors flow through the dissolver off-gas system to the stack jet where they are exhausted to the atmosphere. Since hydrogen is not condensed by the condenser, the hydrogen concentration in the off-gas system can exceed the LFL. Although the off-gas is saturated with water vapor, the amount of water vapor is not sufficient to inert the off-gas and prevent a hydrogen deflagration. To account for this and to include the temperature effects (temperatures above 100°C lower the LFL of a hydrogen–air mixture), Reference 19 determined the minimum purge air flow rate necessary to maintain the off–gas system to be less than 60% of the LFL.

Reference 19 was based on processing the uranium-aluminum alloy fuel in which the significant hydrogen generation is from the dissolution of the aluminum. Reference 19 assumed that during the dissolution of the fuel, the hydrogen generated was up to 7 vol% of the total off-gas generated during the dissolution. The total off-gas generation rate was 72 scfm. With an off-gas rate of 72 scfm and 7 vol% hydrogen, Reference 19 determined that a purge flow rate of 40 scfm would be required to maintain the off-gas to less than 60% of the temperature attenuated LFL. This purge air flow and the related purge air flow interlock were carried forward to the SAR accident analysis and the TSR as LCO 3.1.9.

SRNL ran a series of experiments to determine the optimum flowsheet for dissolving the Super Kukla Metal material in the dissolvers. As part of the flowsheet development process, SRNL performed gas generation tests on the Super Kukla material (Ref. 4). The tests were conducted at 1 M and 2 M HNO_3. Analysis of gas collected during the dissolution of Super Kukla material showed no detectable hydrogen gas. For each gas sample collected and analyzed, the measured hydrogen concentration was less than 0.1 vol%.. The dissolution of carbon steel, present in the charging bundle end caps and the carbon steel cans charged to the charging bundle, in 2 M HNO_3 also produced less than 0.1% hydrogen. Based on the SRNL data, the hydrogen concentration of the off-gas components will not be greater than 0.1 vol% during dissolution for ≥2M HNO_3.

To ensure that the hydrogen concentration of the off–gas components will not exceed 60% of the LFL or the generation rates measured in the SRNL experiments, a minimum nitric acid concentration of ≥2.0M shall be maintained in the dissolvers during dissolution when the Super Kukla Metal material is present in any form. At a concentration of less than 0.1 vol% in the off-gas, and with no concentration mechanism, the hydrogen concentration can never exceed the temperature attenuated LFL for the system and cannot reach 60% of the temperature attenuated LFL in either the dissolver vapor space or the dissolver off-gas system. No specific credit is taken in this analysis for the dissolver off-gas system removing hydrogen from the dissolver vapor space or for preventing a hydrogen deflagration. No credit is taken for the off-gas system other than it exists as a normal part of the dissolver system. The only credit that this analysis takes is that at a 0.1 vol% hydrogen concentration in the off-gas components, the LFL will not be exceeded during dissolution of a single charge.

In a 2.0M nitric acid minimum concentration, 60% of the LFL cannot be exceeded under the worst case conditions for the dissolution operation. Therefore, there are no active or passive SSC controls required to protect the LFL or 60% of the LFL in the dissolver. It is judged that with controls in place, it is not credible that 60% of the LFL could be exceeded from the dissolution of the Super Kukla Metals in the dissolvers. Therefore, it is concluded that the existing TSR LCO 3.1.9 is not applicable for Dissolver 6.1D and 6.4D for dissolution of the Super Kukla Metal material.

When the dissolver is used as a temporary storage vessel, the hydrogen concentration is controlled to 25% of the LFL of a hydrogen–air mixture or 1 vol% hydrogen (at 25 °C) in the dissolver vapor space. Because of the type of material normally dissolved in the H–Canyon dissolvers, the SAR analysis determined that 25% of the LFL could be exceeded from radiolysis of the water in the solution. This analysis was conservative in that it assumed that the dissolver was a totally closed system and that all the hydrogen generated accumulated in the dissolver vapor space. To prevent accumulating more than 25% of the LFL in a short time, the SAR determined that a minimum of 2.3 scfh airflow from the instrument dip tubes was required. See TSR LCO 3.1.8 (Ref. 18). This purge air flow rate removed sufficient hydrogen through the vents (e.g., off-gas system, air leaks) on the system to prevent exceeding the 25% limit. The hydrogen generation rate was sufficient that the limit could be exceeded if some hydrogen was not removed from the system.

Because the hydrogen generation rate is dependent upon the HNO_3 concentration of the solution, the SAR analysis determined that a minimum acid concentration was required to limit the hydrogen generation rate. This minimum acid concentration applies to the dissolver during the dissolution operations and during the storage conditions. The acid concentration affects the hydrogen generation rate during dissolution and from radiolysis. The minimum HNO_3 concentration necessary to prevent excessive hydrogen generation with the Mk–22 SRS fuel was 0.3M and was implemented by TSR SAC 5.7.2.12.a (Ref. 18).

As noted, the Super Kukla Metal material is primarily uranium. A very bounding calculation of the hydrogen generation rate was completed with a nitric acid concentration of 0.01M in the dissolver (Ref. 20). The hydrogen generation rate from these worst case conditions is so low that in the absence of any purge air from the instrument dip tubes, it will take 554 days for Dissolver 6.4D and 865 days for Dissolver 6.1D to reach 25% of the LFL if the material is allowed to sit in the dissolver for that long. Note that it will take approximately four times as long to reach the minimum LFL of 4 vol% hydrogen in the dissolver. Since the hydrogen generation rate from the radiolysis of water will be less at a 2.0M nitric acid concentration than it will at 0.01M, the time to reach the LFL or 25% of the LFL will be longer if an acid concentration of ≥2.0M is maintained in the dissolver when the Super Kukla Metal material is present.

The entire Super Kukla Metals dissolution campaign is projected to take less than one year. There is no conceivable mechanism by which the hydrogen generation rate from radiolysis could exceed 25% of the LFL (1 vol% hydrogen) in the dissolver in this time, even if no controls were present to limit or purge hydrogen from the dissolver. Assuming a process upset condition or equipment failure, it is not conceivable that the Super Kukla Metals solution would remain in the dissolver for longer than two or three months. It is judged that with controls in place, it is not credible that 25% of the LFL could be exceeded from the radiolysis of water with the Super

Kukla Metal solution in the dissolvers. Therefore, it is concluded the SAR and TSR (i.e., LCO 3.1.8 for Dissolvers 6.1D and 6.4D) requirement to ensure that 2.3 scfh of purge air is supplied to the dissolvers during storage conditions is not applicable.

This Addendum has identified a new control to prevent excessive hydrogen evolution in the dissolvers. The hydrogen concentration from both chemically and radiolytically generated hydrogen is based on a minimum nitric acid concentration. The minimum nitric acid concentration of ≥2.0M based on the SRNL report was selected as an appropriate control. The new control is a SAC.

A.4.3.3.2 INADVERTENT NUCLEAR CRITICALITY

The CHA determined that the Criticality Safety Program will identify criticality controls required as a result of the criticality evaluation. Potential criticalities were analyzed in the NCSE (Ref. 16) and DCA (Ref. 15) developed for the Super Kukla Metals campaign.

The NCSE (Ref. 16) developed for the Super Kukla Metals campaign identifies the CSLs for the dissolvers. Reference 15 is a stand alone DCA that contains the appropriate double contingency defenses for the Super Kukla Metals campaign. Reference 15 contains the potential criticality scenarios and should be consulted for details of the credible and incredible criticality scenarios.

The DCA (Ref. 15) determined that a nuclear criticality event that occurs on the South Loading Dock, along the transfer routes, or in the HCMA and vestibules is an incredible event. Based on the material type, material mass, and configuration, and the security requirements, no specific controls are required to prevent a criticality in these areas when Super Kukla Metals material is present. Therefore, the remainder of this Inadvertent Nuclear Criticality analysis will be limited to an analysis of a criticality in the dissolvers. After the Super Kukla Metal solution is transferred from the dissolver, it will be fed into the HM Process and the criticality scenarios and controls in the SAR and DCA (Ref. 17, 15) for the remainder of the HM Process are adequate to prevent a criticality in the processes downstream of the dissolver. This Addendum will not consider processes downstream of the dissolver.

Controls that prevent a criticality in the dissolvers are the CSLs specified in the TSR AC section, the dissolver condenser cooling water interlock, an SAC that requires a structural integrity inspection of a dissolver insert each time the insert is placed in the dissolver, and the insert as a DF.

- The NCSE (Ref. 16) establishes the basis for the CSLs that are applicable to the dissolvers for the Super Kukla Metals material. These CSLs are given in the NCSE and are captured in the TSR. The NCSE assumed a maximum U-235 enrichment of 21 wt% and a maximum 95 wt% uranium in the Super Kukla alloy.

- The SAR and TSR SAC 5.7.2.3.i states "An inspection of the structural integrity of the Dissolver inserts shall be completed each time the inserts are inserted in the dissolver." The intent of this control is to ensure that the geometry of the dissolver insert is maintained to the geometry that was analyzed in the NCSEs. If the insert geometry is changed (e.g., the wells become larger from the walls being deformed outward) the

spacing between the fissile material in the inserts may change. If the spacing is reduced, the smaller spacing could allow the fissile masses to interact and cause a criticality. The SAR and TSR SAC was established to ensure that each time an insert is put into the dissolver, the design features related to criticality safety of the insert were maintained. Since this requirement is established by the existing SAR and TSR (Ref 17, 18) and is applicable for this material, the Super Kukla Metals DCA (Ref. 15) contains a scenario and double contingency requirements to verify that the ten-well insert meets the appropriate design aspects. Therefore, the existing TSR AC will be considered a control in this Addendum.

- One method of ensuring criticality safety in the dissolvers is to use an insert in the dissolver that limits the amount of material that can be charged to the dissolver and also establishes minimum spacing requirements between the fissile masses in the dissolver. Specifically, the ten-well insert is credited in the DCA (Ref. 15). The credited features are the spacing between the wells, the "as built" thickness of the well walls, the length of the wells, the ≤1-inch holes in the walls and the vertical orientation of the wells which provides a large spacing from the outside of the dissolver pot. Therefore, the ten-well insert is a design feature for the Super Kukla Metals campaign.

- One method to exceed the concentration CSL during dissolution is to boil off too much water from the dissolver solution. To minimize the amount of water lost from boil-off, the dissolver has a water cooled condenser that condenses the water vapor and returns it as a liquid to the dissolver pot. This maintains the liquid level in the pot above a minimum level at which an over-concentration of the fissile isotopes could occur. The dissolver condenser has a TSR credited interlock that automatically stops steam flow to the dissolver if the condenser cooling water flow is below a minimum flow rate. The DCA credits the condenser cooling water flow interlock as a defense to prevent a criticality from over-concentration of the dissolver solution. Since the condenser cooling water interlock is an automatic feature, it is a SS feature to prevent a criticality in the dissolver. The condenser cooling water flow interlock is included in the SAR and TSR as a SS SSC. TSR LCO 3.1.10 is the cooling water condenser flow interlock LCO. Because this SSC and its related LCO are credited in the DCA (Ref. 15) for the Super Kukla Metals campaign, it is an SS feature for the Super Kukla Metals campaign and is listed as a control in this Addendum to prevent a criticality in the dissolvers. The specific control credited is the existing TSR LCO 3.1.10.

A.4.4 SAFETY STRUCTURES, SYSTEMS AND COMPONENTS

A.4.4.1 INTRODUCTION

Per the methodology in DOE-STD-3009-94, this section of the Super Kukla Metals Processing Addendum provides details on those facility SSCs that are designated as SC and SS. H-Canyon

is a Hazard Category 2 facility and has SC and SS functions (Ref. 1). Certain SSCs are already designated as SC or SS and are discussed in the SAR.

A.4.4.2 SAFETY CLASS STRUCTURES, SYSTEMS, AND COMPONENTS

SC SSCs structures required for the charging and dissolution of the Super Kukla Metals in H-Canyon are defined in Sections 8.3 and 8.4 of the SAR. There are no additional SC SSCs identified as a result of the analysis in this Addendum for receiving, transporting, and unpacking of the Super Kukla Metals.

A.4.4.3 SAFETY SIGNIFICANT STRUCTURES, SYSTEMS, AND COMPONENTS

SS SSCs required for the charging and dissolution of the Super Kukla Metals in H-Canyon are defined in Sections 8.3 and 8.4 of the SAR. There are no additional SS SSCs identified as a result of the analysis in this Addendum for receiving, transporting, and unpacking of the Super Kukla Metals. The only additional SS SSC credited in the processing of Super Kukla Metals is the dissolver ten-well insert.

A.4.4.3.1 Dissolver Ten-Well Insert

A.4.4.3.1.1 SAFETY FUNCTION

The safety function of the dissolver ten-well insert is to protect FWs from a criticality in the dissolvers during the Super Kukla Metals campaign.

A.4.4.3.1.2 SYSTEM DESCRIPTION

The ten-well insert is in the form of a 2 by 5 array of chargeable cylindrical wells. An earlier version (Revision 7) of Reference 21 describes the dissolvers and ten-well insert in more detail. The ten-well insert has blocking devices available that limit the number of wells open to receive material. The blocking devices have been used for criticality safety purposes for more reactive charge material. However, these blocking devices for the ten-well insert are not required for processing the Super Kukla Metals because all 10 wells of the ten-well insert may be safely charged (Ref. 16).

A.4.4.3.1.3 FUNCTIONAL REQUIREMENTS

The functional requirement of the ten-well insert is to prevent a criticality in the dissolvers while dissolving Super Kukla Metals material by being constructed and controlled per Drawing S5-2-6494. The credited features are the spacing between the wells, the “as built” dimensions, including: thickness of the well walls, the length of the wells, the ≤1-inch holes in the walls and the vertical orientation of the wells which provides a large spacing from the outside of the dissolver pot (Ref. 15). The ten-well insert is designated SS.

A.4.4.3.1.4 SYSTEM EVALUATION

The ten-well insert is designed to meet the safety functions stated above. The ten-well insert design ensures that the insert meets the requirement outlined in the DCA (Ref. 15).

A.4.4.3.1.5 TECHNICAL SAFETY REQUIREMENT CONTROLS

The ten-well insert is a passive SSC and is controlled in the TSR as a design feature (TSR Section B.1.35). The Configuration Control Program covered in the ACs section of the TSR along with the Design Features section of the TSR ensures that no unreviewed changes occur to design features.

A.4.4.4SPECIFIC ADMINISTRATIVE CONTROLS

An AC is designated as an SAC if (1) it is identified in the SAR as a control needed to prevent or mitigate an accident scenario, and (2) it has a safety function that would be SC or SS if the function were provided by an SSC. SACs may also be needed to protect important initial conditions and assumptions of the hazard or accident analysis or provide the main mechanisms for hazard control.

A new SAC is required for the dissolution of the Super Kukla Metals in H-Canyon, as defined in Section A.4.3.3.1 of this Addendum. There are no additional SACs identified as a result of the analysis in this Addendum for receiving, transporting, and unpacking of the Super Kukla Metals.

A.4.4.4.1 Flammable Gas/Vapor Dilution Process Controls - Hydrogen Deflagration in the Dissolver During Super Kukla Metal Processing (TSR 5.7.2.12.k)

The nitric acid concentration in Dissolvers 6.1D or 6.4D shall be greater than or equal to 2.0M at all times when Super Kukla Metals materials are present to prevent excessive hydrogen evolution.

A.4.4.4.1.1 SAFETY FUNCTION

This AC is designated as an SAC because it serves an SS safety function that cannot be performed by an engineered safety system. The safety function is to ensure that a minimum nitric acid concentration is maintained during Super Kukla Metals processing to ensure that the hydrogen evolution rate during dissolution and radiolysis is below that assumed in the accident analysis. There are instruments (e.g., conductivity meters) that can measure the nitric acid concentration, however, it is not practical to use them in the H-Canyon dissolvers during Super Kukla Metals processing. This control is implemented and verified by ensuring that both the HNO_3 concentration and amount in the Third Level Head Tanks is above the level that will ensure that the acidity endpoint concentration remains ≥2.0M in the dissolver at the end of the dissolution process. This SS safety function minimizes the potential for excessive hydrogen

evolution that could lead to a hydrogen deflagration in the H-Canyon dissolvers during Super Kukla Metals processing (Section A.4.3.3.1).

A.4.4.4.1.2 SPECIFIC ADMINISTRATIVE CONTROL DESCRIPTION

Hydrogen is generated in the dissolvers from chemical reactions and by the radiolysis of water. The chemically generated hydrogen occurs primarily in the dissolvers from the dissolution of the Super Kukla Metals. Hydrogen generation from the radiolysis of water occurs in all the H-Canyon and OF-H process vessels where there is radioactive material in contact with water. The acid molarity (concentration) is an important factor in limiting hydrogen evolution rates from chemical reactions and the radiolysis of water. As the acid concentration decreases, more free H_2 is generated based on the reactions occurring in the dissolver. Some of the hydrogen ions generated will react with any free NO_3^- radicals in the solution. Controlling the acid concentration ensures a minimum nitrate ion concentration, which provides the nitrate ions to react with the H^+ ion. This helps ensure that the amount of hydrogen actually generated is less than that calculated in the hydrogen calculations. This control ensures that the conservative hydrogen evolution calculations used for chemically and radiolytically generated hydrogen are protected.

A.4.4.4.1.3 FUNCTIONAL REQUIREMENTS

The requirement is to ensure that the acid concentration in the H-Canyon dissolvers during Super Kukla Metals processing remains above a minimum value to limit the amount of hydrogen released in the reactions and by the radiolysis of water. By ensuring a minimum HNO_3 concentration is maintained, the SAC reduces the potential to exceed the LFL of a hydrogen-air mixture and thereby helps prevent a hydrogen deflagration in the dissolvers. The functional requirement is to provide, via procedures, a minimum nitric acid concentration in the dissolvers when Super Kukla Metals material is present.

A.4.4.4.1.4 SPECIFIC ADMINISTRATIVE CONTROL EVALUATION

This SAC ensures that a positive mechanism exists to minimize the potential for a hydrogen deflagration in the H-Canyon dissolvers when Super Kukla Metals are present. This SAC is implemented by H-Canyon operating procedures. This SAC is effective in preventing a hydrogen deflagration and release of radioactive material in the H-Canyon dissolvers.

A.4.5 DERIVATION OF TECHNICAL SAFETY REQUIREMENTS

A.4.5.1 INTRODUCTION

Per the methodology in DOE-STD-3009-94, this section of the Super Kukla Metals Processing Addendum provides information necessary to support the safety basis requirements for the derivation of the TSR. Information supporting the derivation of the exiting TSR is provided in Sections 8.3 and 8.4 of the SAR. Additional TSRs are not required for processing Super Kukla Metals.

A.4.5.2 TECHNICAL SAFETY REQUIREMENT COVERAGE

TSR coverage for the H-Canyon facility is based on the methodology derived for the entire facility and discussed in the H-Canyon SAR, Chapter 8. This coverage includes the areas required for Super Kukla Metals processing (e.g., HCMA and vestibules, Hot Canyon).

A.4.5.3 TECHNICAL SAFETY REQUIREMENT DERIVATION

Tables 8.4-1, 8.4-2, 8.4-3, and 8.4-4 of the SAR provide a summary listing of the safety SSCs, SACs, and ACs that the safety analysis requires to prevent or mitigate a hazard or accident. There are no new LCOs and associated SRs for the Super Kukla Metals campaign and no existing ACs have been modified with additional controls.

The following sections discuss in detail the bases and derivation of the TSRs applicable to Super Kukla Metals. New TSR controls for Super Kukla Metals are credited in the form of a SAC and Design Feature.

The H-Canyon TSR has LCOs to prevent hydrogen deflagrations during and after dissolution (Ref. 18). These preventive controls are an off–gas purge flow rate during active dissolution (LCO 3.1.9) and a minimum purge flow rate from the dip tube instruments during a storage mode (LCO 3.1.8). These controls are not required to be implemented for the dissolution of Super Kukla Metals and subsequent temporary storage as discussed in Section A.4.3.3.1.

A.4.5.3.1 Administrative Controls

The following section only discusses the new ACs for Super Kukla Metals.

Flammable Gas/Vapor Dilution Process Controls (AC 5.7.2.12)

Super Kukla Metals processing invokes the same Flammable Gas/Vapor Dilution Process Controls with the following added element:

- **[Specific Administrative Control]** The nitric acid concentration in Dissolvers 6.1D or 6.4D shall be greater than or equal to 2.0M at all times when Super Kukla Metals materials are present to prevent excessive hydrogen evolution.

A.4.5.3.2 Design Features

There is one new design feature associated with Super Kukla Metals:

- Ten-well insert

A.4.6 PROGRAMMATIC SAFETY DESCRIPTIONS

A.4.6.1 INTRODUCTION

A.4.6.1.1 Objective

The purpose of this section is to provide information that is compliant with DOE-STD-3009-94, Change Notice 3, and 10 CFR 830 for identified program areas that are necessary for the processing of Super Kukla Metals (Ref. 1). Programmatic information for processing material is already contained in the existing H-Canyon Facility SAR and TSR (Ref. 17, 18); therefore, it is not reiterated here.

A.4.7 REFERENCES

1. Preparation Guide for U.S. Department of Energy Nonreactor Nuclear Facility Documented Safety Analysis, DOE-STD-3009-94 Change Notice 3, U.S. Department of Energy, Washington, DC, March 2006.

2. Welliver, D. E., Consolidated Hazard Analysis for the H-Canyon Dissolution of NNSA Metal (U), WSRC-TR-2006-000360, Rev. 0, Washington Safety Management Solutions, Aiken, SC, December 2006.

3. Chandler, M.C., Evaluating the Super Kukla for H-Canyon Processing, WSRC-TR-006-0407, Rev. 0, Washington Savannah River Company, Aiken, SC, November 2006.

4. Pierce, R. A., Uranium-Molybdenum Dissolution Flowsheet Studies, WSRC-STI-2006-00103, Rev 0, Washington Savannah River Company, Aiken, SC. March 2007.

5. H-Canyon Preliminary Hazard Analysis, H-Canyon & Outside Facilities, WSRC-TR-95-0035, Rev. 4, Westinghouse Savannah River Company, Aiken, SC, February 2005.

6. Hazard Categorization and Accident Analysis Techniques for Compliance with DOE Order 5480.23, Nuclear Safety Analysis Reports, DOE-STD-1027-92, Change Notice 1. U. S. Department of Energy, Washington, DC, September 1997.

7. Consolidated Hazard Analysis Process (CHAP) Program & Methods Manual, SCD-11, Rev. 4, Westinghouse Savannah River Company, Aiken, SC, June 2005.

8. "Functional Classifications," Procedure 2.25, Rev. 14, Conduct of Engineering and Technical Support Procedure Manual (U), WSRC Procedure Manual E7, Westinghouse Savannah River Company, Aiken, SC, January 2003.

9. Hayes, T. Functional Classification Methodology Manual, WSRC-TM-93-9, Rev. 5, Westinghouse Savannah River Company, Aiken, SC, November 2004.

10. Airborne Release Fractions/Rates and Respirable Fractions for Nonreactor Nuclear Facilities, DOE-HDBK-3010-94, U. S. Department of Energy, Washington, DC, December 1994.

11. Gehr, D., et.al. RADScreen – A Radiological Consequence Analysis Lookup Table of Radionuclides for Hazard Analysis at SRS (U), S-CLC-G-00324, Rev. 0, Washington Safety Management Solutions, Aiken, SC, September 2006.

12. Knight, J. T., F-Area and H-Area Tank Farm Radiological Consequence Analysis for Unit Curie Release, S-CLC-F-00593, Rev. 0, Washington Safety Management Solutions, Aiken, SC, July 2006.

13. East, J. M. Specific Activities of 167 Common Accident Analysis Radionuclides, N-CLC-

G-00040, Rev. 0, Westinghouse Savannah River Company, Aiken, SC, May 1996.

14. AEGLs, ERPGs, or TEELs for Chemicals of Concern 2005, Rev. 21, Department of Energy, Washington DC.

15. Benhardt, H. C., Nuclear Criticality Safety Evaluation: DCA for Dissolution of NNSA Metals (Super Kukla) in H-Canyon, N-NCS-H-00207, Rev. 0, Washington Safety Management Solutions, Aiken, SC, March 2007.

16. Goslen, A. Q., Nuclear Criticality Safety Evaluation: Dissolving Uranium-Molybdenum Alloy (Super Kukla) in H-Canyon Dissolvers With the 10-Well Insert, N-NCS-H-00206, Rev. 1, Washington Safety Management Solutions, Aiken, SC, March 2007.

17. H-Canyon Safety Analysis Report, WSRC-SA-2001-00008, Rev. 11, Washington Savannah River Company, Aiken, SC, March 2007.

18. H-Canyon & Outside Facilities, Technical Safety Requirements, WSRC-TS-96-19, Rev. 15, Washington Savannah River Company, Aiken, SC, March 2007.

19. H–Canyon Dissolver Hydrogen Dilution Calculations Using Off–Gas Specific Lower Flammability Limit (LFL), X–CLC–H–00473, Rev. 0, Westinghouse Savannah River Company, Aiken, SC, October 2003.

20. Clifton, W. H., Hydrogen Generation of Dissolved Uranium-Molybdenum Solution During Potential Storage, X–CLC–H–00640, Rev. 0, Washington Savannah River Company, Aiken, SC, January 2007.

21. Gundy, L. M., H-Canyon Double Contingency Analysis (U), N-NCS-H-00037, Rev. 15, Washington Savannah River Company, Aiken, SC, February 2006.

A.4.8 METHODOLOGY TABLES

Table A.4.8-1 Consequence Evaluation Levels for Hazard Receptors

Acronym	Description	Frequency Level ($year^{-1}$)
A	Anticipated, Expected	$f \geq 10^{-2}$/yr.
U	Unlikely	$10^{-4} \leq f < 10^{-2}$/yr.
EU	Extremely Unlikely	$10^{-6} \leq f < 10^{-4}$/yr.
BEU	Beyond Extremely Unlikely	$f < 10^{-6}$/yr.

Table A.4.8-2 Consequence Evaluation Levels for Hazard Receptors

Consequence Level (Abbreviation)		Offsite Public Receptor	Facility Worker	Co-Located Worker
High (H)	Non-rad/Non-Chemical Injury		Prompt worker fatality, serious injury that is immediately life threatening or permanently disabling	Prompt worker fatality, serious injury that is immediately life threatening or permanently disabling
	Radiological	C ≥ 25.0 rem	C ≥ 100 rem; or radiological material quantity exceeds Hazard Category 3 threshold (per DOE-STD-1027); or high consequence injury due to radiological release or exposure	C ≥ 100 rem; or high consequence injury due to radiological release or exposure
	Chemical	C ≥ ERPG-2	Uniform distribution of total release C >= ERPG-3 or high consequence injury due to chemical release or exposure	C ≥ ERPG-3; or ≥ 29 CFR 1910.119 TQ released; or high consequence injure due to chemical release or exposure
Moderate (M)	Non-rad/Non-Chemical Injury		Serious injury, no immediate loss of life, no permanent disabilities, hospitalization required	Serious injury, no immediate loss of life, no permanent disabilities, hospitalization required
	Radiological	5.0 ≤ C < 25 rem	25 ≤ C < 100 rem; or moderate consequence radiological related injury	25 ≤ C < 100 rem; or moderate consequence radiological related injury
	Chemical	ERPG-1 ≤ C < ERPG-2	Uniform distribution of total release ERPG-2 ≤ C < ERPG-3; or moderate consequence chemical related injury	ERPG-2 ≤ C < ERPG-3; or moderate consequence chemical related injury
Low (L)	Non-rad/Non-Chemical Injury		Minor injuries, no hospitalization	Minor injuries, no hospitalization
	Radiological	0.5 ≤ C < 5.0 rem	5.0 ≤ C < 25 rem; or low consequence radiological related injuries	5.0 ≤ C < 25 rem; or low consequence radiological related injuries
	Chemical	PEL-TWA ≤ C < ERPG-1	Uniform distribution of total release ERPG-1 ≤ C < ERPG-2; or low consequence chemical related injuries	ERPG-1 ≤ C < ERPG-2; or low consequence chemical related injuries
Negligible (N)	All	< Low	< Low	< Low

Note: Safety Class or Safety Significant controls are required if event consequence challenge (i.e., does not have to exceed) high radiological or chemical exposure consequence. Safety Significant controls are required in nuclear facilities for prompt fatality, life threatening, or permanently disabling injuries that are not covered by national codes and standards.

Emergency Response Planning Guideline (ERPG)
Permissible Exposure Limit (PEL)
Time Weighted Average (TWA)

Table A.4.8-3 Risk Binning Matrix

Frequency → / Consequence ↓	**Beyond Extremely Unlikely** ($f < 10^{-6}$/yr.)	**Extremely Unlikely** ($10^{-6} \le f < 10^{-4}$/yr.)	**Unlikely** ($10^{-4} \le f < 10^{-2}$/yr)	**Anticipated** ($f \ge 10^{-2}$/yr)
****High**	***C/A3**	**A2**	**A1**	**A1**
Moderate	***C/B**	**B**	**B**	**B**
Low	**C**	**B**	**B**	**B**
Negligible	**C**	**C**	**C**	**C**

Key:

A1 **Region A1**
Region A1. Unmitigated events falling in Region "A1" due to radiological release require controls (Safety Class for the public and Safety Significant for the workers) and are **highly recommended** for additional Levels of Control for all receptors as specified in E7 Procedure 2.25. Unmitigated events falling in Region "A1," due to chemical release or prompt fatality (etc.), require Safety Significant controls and **highly recommended** for additional Levels of Control as specified in E7 Procedure 2.25. The desired result is that the mitigated consequence is moved well into the "B" region, and possibly the "C" region or the event is prevented.**

A2 **Region A2**
Region A2. Unmitigated events falling in Region "A2" due to radiological release require controls (Safety Class for the public and Safety Significant for the workers) and are **recommended** for additional Levels of Control for all receptors as specified in E7 Procedure 2.25. Unmitigated events falling in Region "A2" due to chemical release or prompt fatality (etc.) require Safety Significant controls and are **recommended** for additional Levels of Control as specified in E7 Procedure 2.25. The desired result is that the mitigated consequence is moved well into the "B" region, and possibly the "C" region or the event is prevented.**

A3 **Region A3**
Region A3. Unmitigated events falling in Region "A3" due to radiological release require controls (Safety Class for the public and Safety Significant for the workers) and are considered for additional Levels of Control for CW or public as specified in E7 Procedure 2.25. Unmitigated events falling in Region "A3" due to chemical release or prompt fatality (etc.), require Safety Significant controls and considerations for additional Levels of Control as specified in E7 Procedure 2.25. The desired result in the mitigated consequence is from "High" to "Low" or "Negligible."

B **Region B**
Region B. Events having moderate "B" consequences that challenge "A" region consequences require Safety Class (public) or Safety Significant (worker) controls. Otherwise, events falling in Region "B" require Facility Controls. The desired result is that the mitigated combination of consequence and frequency is move toward, and possibly into, the "C" region.

C **Region C**
Region C. Events falling in Region C are not considered for controls. However, there may be events in this region that require the addition of Facility Controls because the frequency is higher than desired, or the occurrence of the uncontrolled event is unacceptable to management in any event, or the uncontrolled event is unacceptable for programmatic or political reasons.

*Process related internal events that are not covered by NPH or External Events are assumed to be credible events, regardless of frequency, and fall into the Region A's; however, also see related criteria in E7, 2.25, att. 8.8. Credible external man made events with a frequency of $<10^{-6}$/year as conservatively estimated, or $<10^{-7}$/year as realistically estimated fall into Region C. NPH events are evaluated at frequency specified by DOE-STD-1020.

**When a preventive control strategy is selected for unmitigated events falling in Region "A1" or "A2," there is not an absolute requirement to make the mitigated event Beyond Extremely Unlikely. If the control strategy meets all the engineering requirements for its classification (Safety Class for public (radiological) and Safety Significant for public (chemical) or worker), it is acceptable even if the event frequency is not Beyond Extremely Unlikely. The mitigated event is considered to be in Region B. The desired result is that the mitigated consequence is moved well into the "B" region, and possibly the "C" region by the addition of Facility Controls.

H–Canyon
Safety Analysis Report

Documented Safety Analysis

3013 Material (Pu/Be) Processing
Addendum 5, Revision 0

June 2007

SAVANNAH RIVER SITE
Aiken, SC 29808 • www.srs.gov

PREPARED FOR THE U.S. DEPARTMENT OF ENERGY UNDER CONTRACT NO. DE-AC09-96SR18500

A.5 3013 MATERIAL (Pu/Be) PROCESSING

A.5.1 EXECUTIVE SUMMARY

A.5.1.1 BACKGROUND AND MISSION

The H-Canyon Facility plans to receive and dissolve beryllium contaminated plutonium (Pu/Be) with subsequent transfer of the processed solutions to normal waste disposition. The 3013 Material group consists of Pu/Be scrap (referred to as Pu/Be in this Addendum). The HB-Line will receive, unpack and repack the Pu/Be in dissolvable cans. Dissolution of the Pu/Be Material will occur in the H-Canyon dissolvers. When dissolution is complete, the solution will be transferred for processing to HLW.

A.5.1.2 SAFETY ANALYSIS OVERVIEW

The analysis presented in this Addendum is limited to the receipt and handling of the Pu/Be Metal received from HB-Line, since these activities are not evaluated in the SAR. This Addendum will also establish the appropriate CSL and the necessary air purge rates for the Pu/Be Metal in the dissolvers. This Addendum documents the technical basis for the controls that ensure that a hydrogen deflagration and a criticality are prevented during dissolution operations. After dissolution, the subsequent disposition of the dissolver solutions is performed using existing processes and methods; the analysis of these operations in the SAR is still applicable. The Pu/Be Material CHA demonstrated that the Pu/Be Metal's source term is bounded by the existing SAR source term; therefore, downstream processing accidents involving Pu/Be Material are not evaluated in this Addendum (Ref. 1). The operations analyzed in this Addendum are briefly described below and in Section A.5.2.2.

The Pu/Be Material consists of Pu/Be scrap. The Pu/Be Material shipments will originate from onsite storage facilities and will arrive at the H–Canyon South Loading Dock in 9975 shipping containers containing Pu/Be product cans which consist of composite Pu/Be Material. The shipping containers will be transported via an elevator to HB–Line. After verification of the drum number against the batch list, HB–Line personnel will unload the shipping containers and repackage the Pu/Be Material into dissolvable Pu/Be carbon steel cans to facilitate dissolution in the H–Canyon dissolver. Once the cans are loaded, they will be transported from HB–Line to the H–Canyon HCMA.

In the HCMA, each can will be loaded into a Pu/Be stainless steel charging bundle. The Pu/Be charging bundle design allows only one can of Pu/Be to be loaded into the charging bundle. A charging bundle will be charged to each well of the Mk XII insert (with spacers), which is currently installed. From the HCMA, the Pu/Be in the charging bundles will be charged directly to Dissolver 6.1D or 6.4D for dissolution in nitric acid, using calcium fluoride or potassium fluoride as a catalyst. A soluble neutron poison (boron or gadolinium) will also be used to ensure criticality safety. The carbon steel cans will dissolve very quickly upon heating of the

nitric acid. The fissile material mass in the carbon steel cans will be below the applicable CSL for a fissile mass charged to the wells of a dissolver insert.

To improve process efficiency, multiple dissolver charges will constitute a single dissolver batch. A single dissolver charge is up to four Pu/Be cans filled with Pu/Be Material (one can in each well of the Mk XII insert). A dissolver batch is defined as one or more dissolver charges in the same nitric acid solution such that the dissolver concentration limit is not exceeded. After dissolution of each charge, the dissolver solution is sampled to verify Pu/Be dissolution. At the completion of a dissolver batch, the solution will be transferred from Dissolver 6.1D to Tank 7.4 or from Dissolver 6.4D to Tank 8.3, sampled to verify the dissolution is complete, and then transferred for processing to HLW.

The CHAP was used to analyze the hazards associated with the processing of the Pu/Be Material (Ref. 1). The CHAP hazard evaluation was performed in accordance with the methodology outlined in Section A.5.3.2. The majority of the information required to perform the HE was obtained through reviews of facility documentation, facility walk downs, and discussions with facility personnel. The process areas and activities were analyzed against the event categories (E-1 through E-7), postulating event scenarios for the applicable hazardous energy sources and hazardous material sources. The identified event scenarios cover the spectrum of possible events for a given hazard from small consequence events for which existing procedures or equipment is acknowledged to provide adequate protection, to reasonable worst-case conditions, in terms of both event frequency and consequence magnitude.

The results of these activities are documented in the CHA for Pu/Be Metal (Ref. 1) and in Section A.5.3.2, which identifies the hazardous events identified for the receipt, transport, movement, and dissolver loading of Pu/Be Material. This hazard evaluation process resulted in the identification of 8 potential events involving hazards and/or hazardous materials. The risk rank for each postulated event was determined by locating the event on the risk matrix (Table A.5.8-3), based upon the consequence level and frequency level of the event. The risk ranks are documented in the CHA for Pu/Be Metal (Ref. 1).

Of the 8 events identified in the HEs, 7 of the events do not have an unmitigated risk rank of "A1," "A2," or "A3" for the FW, the CW, or the public. This means that the unmitigated consequences of these events did not exceed or challenge the FW, CW, or public high consequence levels shown in Table A.5.8-2 and do not require further quantitative analysis and the selection of SC or SS controls to assure that the guidelines are not challenged. One event postulated in the CHA, an inadvertent criticality, had an unmitigated risk rank of "A3," with potential high radiological consequences to the FW.

Four events resulted in an unmitigated risk rank of "B," with potential moderate radiological consequences to the FW. These four events have designated Facility Controls to protect the FW from the hazards of a Pu/Be Material release and were judged to not challenge the risk rank "A" criteria.

A.5.1.3 SAFETY ANALYSIS CONCLUSIONS

This Addendum evaluates the hazards and provides the necessary controls to ensure safe operation for the processing of Pu/Be Material in H-Canyon. The operations to receive and load the Pu/Be Metal material into the dissolving charging bundle and the dissolution of the Pu/Be Metal are evaluated and controls are selected to ensure that these operations can be conducted safely without undue risk to the facility and onsite workers, the offsite public, and the environment. Downstream of the dissolvers, the Pu/Be Metal solution will be processed using normal H-Canyon processing. This Addendum demonstrates that receipt and loading of the Pu/Be Metal into the dissolver charging bundle and dissolution of the Pu/Be Metal material poses minimal risk to all receptors.

A.5.2 Pu/Be PROCESS DESCRIPTION

A.5.2.1 INTRODUCTION

This section describes the processing of the Pu/Be Material scrap in H-Canyon. For a description of the H-Canyon facility structure, process systems and constituent components, confinement systems, safety support systems, utilities, and auxiliary systems and support systems, refer to the H-Canyon SAR.

A.5.2.2 Pu/Be PROCESS DESCRIPTION

The Pu/Be Material group consists of beryllium contaminated plutonium scrap. The Pu/Be Material shipments will originate from onsite storage facilities and will arrive at the H–Canyon South Loading Dock in 9975 shipping containers containing Pu/Be product cans which contain the composite Pu/Be Material. The shipping containers will be transported via an elevator to HB–Line. After verification of the drum number against the shipping information (e.g. Shipment Receipt Report, Material Control and Accountability Transaction) , HB–Line personnel will unload the shipping containers and repackage the Pu/Be Material into the dissolvable Pu/Be carbon steel cans to facilitate dissolution in the H–Canyon dissolver. Once the cans are loaded, they will be transported from HB–Line to the H–Canyon HCMA.

In the HCMA, each can will be loaded into a Pu/Be stainless steel charging bundle. The Pu/Be charging bundle design allows only one can of Pu/Be to be loaded into the charging bundle. One charging bundle will be charged to each well of the Mk XII insert (with spacers), which is currently installed. From the HCMA, the Pu/Be in the charging bundles will be charged directly to Dissolver 6.1D or 6.4D for dissolution in nitric acid, using calcium fluoride or potassium fluoride as a catalyst. A soluble neutron poison (boron or gadolinium) will also be used to ensure criticality safety (Ref. 2). The carbon steel cans will dissolve very quickly upon heating of the nitric acid. The fissile material mass in the carbon steel cans will be below the applicable CSL for a fissile mass charged to the wells of a dissolver insert.

To improve process efficiency, multiple dissolver charges will constitute a single dissolver batch. A single dissolver charge is up to four Pu/Be cans filled with Pu/Be Material (one can in each

well of the Mk XII insert). A dissolver batch is defined as one or more dissolver charges in the same nitric acid solution such that the dissolver concentration limit is not exceeded. After dissolution of each charge, the dissolver solution is sampled to verify Pu/Be dissolution. At the completion of a dissolver batch, the solution will be transferred from Dissolver 6.1D to Tank 7.4 or from Dissolver 6.4D to Tank 8.3, sampled to verify the dissolution is complete, and then transferred for processing to HLW. The flow sheet for the Pu/Be Material is based on dissolution testing of FBL Pu residues containing Be metal for HBL (Ref. 3), Mk-42 fuel dissolution (Ref. 4), Pu scrub alloy and anode heel material for H-Canyon (Ref. 5), and the fluoride/boron/gadolinium dissolution flow sheet (Ref. 6).

A.5.3 HAZARD AND ACCIDENT ANALYSIS

A.5.3.1 INTRODUCTION

This section of the Addendum describes the process used to systematically identify and assess process-related, external, and NPH events. The hazards are evaluated to determine the potential for the identified hazards to develop into accidents.

A.5.3.2 HAZARDS ANALYSIS

A.5.3.2.1 Hazards Analysis Methodology

Refer to Section 8.0 of the SAR for general information regarding the methodology used to identify and characterize hazards. Specific information provided in this section is included to show the variations in the methodology used to develop the Pu/Be Metal CHA compared to hazards analyses methodology discussed in Section 8.0 of the SAR.

A.5.3.2.1.1 HAZARD IDENTIFICATION

Hazards were systematically identified by evaluating the hazardous materials and energy sources associated with the receipt, handling, and dissolution of the Pu/Be Material in the H-Canyon facility. Hazards associated with dissolution of plutonium- and uranium-bearing materials are addressed in the H-Canyon PHA, Tables D-1, and D-2 (Ref. 7). The CHA (Ref. 1) addresses the unique hazards associated with the handling and charging of the Pu/Be starting from the receipt of the material from HB-Line to the charging of the Pu/Be to the H-Canyon dissolvers. No new hazards were identified by the CHA Team for dissolving Pu/Be Material.

The H-Canyon PHA does not evaluate receiving the Pu/Be Material containers from HB-Line, transporting the containers to the HCMA, and loading the containers into the dissolvers. The transport route from HB-Line to the HCMA was walked down to identify hazards. The CHA documents the hazard identification process for these activities/locations (Ref. 1).

A.5.3.2.1.2 HAZARD CATEGORIZATION

The H–Canyon facility has been classified as a Hazard Category 2 facility using the methodology presented in DOE–STD–1027–92 (Ref. 8). Refer to the SAR, Section 8.1 for a discussion of the hazard categorization of the H-Canyon facility. Processing of Pu/Be Material does not change the Hazard Category.

A.5.3.2.1.3 HAZARD EVALUATION

The HE is the primary focal point of the HA. Hazards were characterized in the context of actual facility operations and processes by considering feasible release mechanisms (or events), estimating initiating event frequency, estimating consequences of the release, identifying preventive and mitigative features, and assigning a risk bin. The purpose of the HE was to ensure a comprehensive assessment of the hazards associated with processing Pu/Be Material and to focus attention on those events that pose the greatest risk to the public, the CW, and the FW. The majority of information required to perform the HE was obtained by reviews of facility documentation and CHAP Team expertise. The HE was performed in accordance with the Consolidated Hazards Analysis Process (CHAP) Program and Methods Manual (Ref. 9).

The scope of the HE included the following:

- Receipt, handling, and dissolution of Pu/Be Material in the H-Canyon dissolvers 6.1D and 6.4D
- Natural phenomena (e.g., earthquakes, tornadoes, straight-line winds), external events (e.g., aircraft and vehicular impact), and nuclear criticality (where applicable).
- The entire spectrum of possible events for a given hazard in terms of both frequency and consequence levels.
- Hazards addressed by other programs and regulations (e.g., Process Safety Management Standard, Occupational Safety and Health Act, Resource Conservation and Recover Act, Department of Transportation, and Environmental Protection Agency) were included, only if loss of control of the hazard results in a chemical or radiological release.

The scope of the HE did not include the following:

- Willful acts, such as sabotage
- Hazards routinely accepted by the public. (These were screened during the common hazard screening process prior to conducting the HE.)

Event scenarios for each aspect of the Pu/Be Material processing were developed wherever a potential exists for a release of hazardous energy and/or material. The scenarios developed covered the entire spectrum of possible events for a given hazard, from small consequence events, for which procedures or equipment are acknowledged to provide adequate protection, to worst-case events. Event categorization, identification of event cause(s), assignment of initiating event/event frequency and unmitigated/mitigated consequence levels, identification of mitigative

and preventive features, screening for common hazardous events, and risk binning were conducted during the HE. The primary goal of the HE was to identify and evaluate specific events associated with hazardous material releases.

The HE is presented in tabular form and includes the following information:

- Event Description
- Causes
- Preventive features (design and administrative)*
- Frequency level (unmitigated and mitigated)*
- Mitigative features (design and administrative)*
- Consequences (unmitigated and mitigated)*
- Risk ranking (unmitigated and mitigated)*

Features of the Pu/Be Material CHA HE tables (listed above) annotated with a "*"differ from the HE tables in the existing H-Canyon PHA (Ref. 7) and are discussed below.

A.5.3.2.1.3.1 Preventive Features

A preventive feature is any feature that is readily expected to act to prevent the release of hazardous material to an unwanted location, thus reducing the frequency of the associated release event. The selection of such features was made without regard to any possible pedigree of the feature such as procurement level or current classification. These included engineered features (e.g., SSCs), ACs (e.g., procedures, policies, programs), natural phenomena (e.g., ambient conditions, buoyancy, gravity), or inherent features (e.g., physical or chemical properties, location, elevation) operating individually or in combination. Preventive features are those that are assumed to be operable prior to an event and may not be required to be operable during the event or post event. Any facility design or administrative SC or SS features that were credited with reducing the frequency of a postulated event that exceeds or challenges the EGs are required to be annotated in the HE. No SC or SS preventive features were identified in the HE tables. Facility controls (DiD features) used to further reduce the frequency of a postulated event are identified in the HE by text in **bold**.

A.5.3.2.1.3.2 Frequency Level

The HE includes estimates of the frequency levels. Event frequency evaluation was a qualitative or semi-quantitative process that involved assigning a frequency level to each event in the HE tables based on the event's root cause(s). Frequency levels and descriptions are based on DOE-STD-3009-94 (Ref. 10). Sources of frequency information included generic initiator databases, existing safety documentation, natural phenomena frequency levels, engineering calculations, failure rate data, and facility expert opinion. The frequency level was recorded in the HE tables according to the Table A.5.8-1 lettering scheme. Erring in the conservative direction from best-estimate values was used to accommodate uncertainties in the frequency levels.

For the mitigated HA, credit was taken for preventive features identified in the HE, NCSEs, and other evaluations prepared to support Pu/Be Metal processing.

A.5.3.2.1.3.3 Mitigative Features

Mitigative features are any features that were expected to reduce the consequences associated with the release of hazardous material. The identification of such features is made without regard to any possible pedigree of the feature, such as procurement level or current classification. Mitigative features are those that are assumed to be operable during an event or after the event, and were not required to be operating prior to the event initiation. Therefore, mitigative features are capable of withstanding the environment of the event. These include engineered features (e.g., SSCs), ACs (e.g., procedures, policies, programs), natural phenomena (e.g., ambient conditions, buoyancy, gravity), or inherent features (e.g., physical or chemical properties, location, elevation) operating individually or in combination. Any facility design or administrative SC or SS features that were credited with reducing the consequences of a postulated event that exceeds or challenges the EGs are required to be annotated in the HE. No SC or SS mitigative features were identified in the HE tables. Facility controls (DiD features) used to further reduce the consequences of a postulated event were identified in the HE by text in **bold**.

A.5.3.2.1.3.4 Consequences

Event consequences were documented by specifying the impact on the receptors (described below) and the criteria used to assess the impact. Any potential impact of consequences on other systems is also documented in this column of the HE tables. For HE purposes, consequences to human receptors were defined as the dose or exposure to the specified receptors. Consequences were a function of the type and characteristics of the hazard, the quantity of material released, the release mechanism, relative location of the release, and any relevant transport characteristics. Consequences were determined from (1) simple source term calculations, (2) existing safety documentation, and/or (3) qualitative assessment. The CHA team utilized its discretion, expertise, and knowledge of facility hazards to select one or more of the above methods appropriate for consequence determination. Unlike frequency levels, which cover two orders of magnitude in one frequency bin of the binning matrix, consequence levels sometimes span less than one order of magnitude. Thus, a more refined effort is required to determine the appropriate consequence level for a given event and receptor. Much like frequency evaluation, erring in the conservative direction was encouraged, especially for those events with consequences at the high end of a given level.

The evaluation used a qualitative or semi-quantitative assessment based on the quantities of radionuclides and chemicals released as a result of each postulated event. In addition, these quantities were dependent on the release fractions associated with each combination of material form and event type. The semi-quantitative consequence evaluation used bounding release fractions.

Consequences were evaluated at various receptor locations to assess health effects of the postulated release. Table A.5.8-2 defines the terms used to describe the radiological and

chemical consequence levels used in the Pu/Be Material HE tables for the specified receptor locations. Receptors are the FW, CW, and the public.

- FWs are workers immediately adjacent to, or in, the occupied area of the hazard. "Occupied area of the hazard" refers to the area within the last possible means of physically controlling the hazard or controlling access to the hazard (i.e., building, fence, permanent chain with multiple warning signs). FWs equate to the FC Receptors 1 and 2 as described in WSRC Procedure Manual E7, Procedure 2.25 (Ref. 11).
- CWs are outside the occupied area of the hazard. CWs equate to the FC Receptor 3 as described in WSRC Procedure Manual E7, Procedure 2.25 (Ref. 11).
- The public is everyone outside the site boundary at the time of the event.

These receptors were consistent with those used in the SRS Functional Classification Methodology Manual (Ref. 12).

For the unmitigated consequence determination, crediting an SSC or AC for its mitigative properties was avoided.

For mitigated HA purposes, consequences were defined as the dose or exposure at specified receptor locations based upon mitigated release of hazardous material. Consequences were a function of the type and characteristics of the hazard, the quantity of hazardous material released, the release mechanism, relative location of the release, and any relevant transport characteristics. The mitigated consequence levels were derived from existing facility accident analyses and consequence analyses and the collective judgment of the CHA team.

A.5.3.2.1.3.5 Risk Ranking

The risk ranking was provided as a measure of the risk associated with the event. The HE tables provide, for each of the postulated release events, a bin category representing risk at each receptor location. Using event frequency and consequence levels, the events were binned in a matrix to assess relative risk. The objective of risk binning was to focus attention on those events that pose the greatest risk to the public and the onsite receptors. As discussed earlier, compliance with the Functional Classification Methodology Manual is maintained.

Table A.5.8-3 is the risk binning matrix for the three receptor locations considered in the CHA (i.e., FW, CW, and public). In this table, a rectangular matrix in frequency-consequence space defines the bins.

Unmitigated events falling in Region "A1" due to radiological release require controls (SC for the public and SS for the workers) and are highly recommended for additional Levels of Control for all receptors as specified in E7 Procedure 2.25 (Ref. 11). Unmitigated events falling in Region "A1" due to chemical release or prompt fatality require SS controls and are highly recommended for additional Levels of Control as specified in E7 Procedure 2.25. The desired result is that the mitigated consequence is moved well into the "B" region and possibly the "C" region, or the event is prevented.

Unmitigated events falling in Region "A2" due to radiological release require controls (SC for the public and SS for the workers) and are recommended for additional Levels of Control for all receptors as specified in E7 Procedure 2.25. Unmitigated events falling in Region "A2" due to chemical release or prompt fatality require SS controls and are recommended for additional Levels of Control as specified in E7 Procedure 2.25. The desired result is that the mitigated consequence is moved well into the "B" region and possibly the "C" region, or the event is prevented.

Unmitigated events falling in Region "A3" due to radiological release require controls (SC for the public and SS for the workers) and are considered for additional Levels of Control for CW or public as specified in E7 Procedure 2.25. Unmitigated events falling in Region "A3" due to chemical release or prompt fatality require SS controls and considerations for additional Levels of Control as specified in E7 Procedure 2.25. The desired result in the mitigated consequence is from "High" to "Low" or "Negligible."

Events having moderate "B" consequences that challenge "A" region consequences require SC (public) or SS (worker) controls. Otherwise, events falling in Region "B" require Facility Controls. The desired result is that the mitigated combination of consequence and frequency is moved toward, and possibly into, the "C" region.

Events falling in Region "C" are not considered for controls. However, there may be events in this region that require the addition of Facility Controls because the frequency is higher than desired, or the occurrence of the uncontrolled event is unacceptable to management in any event, or the uncontrolled event is unacceptable for programmatic or political reasons.

Neither SC nor SS controls were identified in CHA for processing the Pu/Be Metal. Facility Controls were identified for events involving fires and loss of containment (Ref. 1).

A.5.3.2.1.4 HAZARDS ANALYSIS INPUTS AND ASSUMPTIONS

A.5.3.2.1.4.1 Inputs

The following inputs formed the basis for the Pu/Be Material CHA.

1. The current PHA for H-Canyon (Ref. 7) contains HE tables for dissolving radioactive materials. Table D-2 of the PHA provides this information.
2. The HB-Line Facility will receive Pu/Be Material in shipping containers. These activities are not evaluated in this Addendum.
3. Unpacking and repackaging of the Pu/Be Material for dissolution in H-Canyon will be performed in the HB-Line Facility. These activities are not evaluated in this Addendum.
4. Chemicals associated with Pu/Be Material dissolution are nitric acid, potassium fluoride, gadolinium nitrate, calcium fluoride, and boric acid. Nitric acid, potassium fluoride, gadolinium nitrate, and boric acid have previously been analyzed, and typical facility chemical inventories are outlined in the H-Canyon SAR. Calcium fluoride will be

charged to the dissolvers to facilitate dissolution of the Pu/Be Material if boron is used as a poison. Potassium fluoride will be charged to the dissolvers to facilitate dissolution of the Pu/Be Material if gadolinium is used as a poison.

5. The Pu/Be Material will be repackaged in dissolvable carbon steel cans. The fissile material mass in the dissolvable cans will be below the applicable CSL for a fissile mass charged to the wells of a dissolver Mk XII insert.

6. No more than 2.0 kilograms of Pu-239 equivalent will be in the HCMA for charging to a H-Canyon dissolver at any one time. This is a Safeguards and Security requirement. For analytical purposes, the Pu/Be Material evaluated to determine radiological consequences consists of 2.0 kilograms of Pu-239 and 200 grams of Pu-240.

7. Based on the projected charging scheme, the Pu/Be can with the largest Be content, including uncertainty will contain 311 grams of Be. For analytical purposes, the maximum amount of beryllium that each shipping container of Pu/Be Material may contain is 315 grams.

8. The maximum quantities of radionuclides assumed for the dissolution of Pu/Be Material is bounded by the quantities assumed in the current accident analysis for H-Canyon. Consequences for existing H-Canyon dissolution accidents bound those consequences for Pu/Be dissolution accidents.

9. The bounding gadolinium nitrate inventory for chemical consequence evaluation is 1500 lbs, which is above the inventory of 750 lbs outlined in Table 8.1-4 in Section 8.0 of the SAR.

10. The bounding calcium fluoride inventory for chemical consequence evaluation is 250 lbs. This chemical has not been analyzed in the SAR and is not listed in Table 8.1-4 in Section 8.0 of the SAR.

11. The amount of nitric acid, potassium fluoride and boric acid used during Pu/Be Material processing is less than the 300,000 lbs, 500 lbs and 4000 lbs, respectively, listed in Table 8.1-4 in Section 8.0 of the SAR.

12. Airborne Release Fraction (ARF) and Respirable Fraction (RF) products (ARF x RF) for postulated radiological and chemical releases involving Pu/Be Material were obtained from Section 4.0, *Solids*, of DOE-HDBK-3010-94 (Ref. 13):

Table A5.3-1 - Pu/Be ARF x RF Products

Event	ARF x RF
Thermal Stress – Plutonium Metal	2.5E-4
Blast Effects – Plutonium Metal	No significant airborne release postulated
Free Fall Spill/Impaction Stress – Plutonium Metal	No significant airborne release postulated

Airborne release of surface contamination on the Pu/Be Material or cans could occur as a result of blast effects or free fall spill/impaction stress (Ref. 13). The amount of surface contamination expected is minimal; therefore, no significant airborne release is postulated from surface contamination for these type events. Reference 13 recommends an ARF/RF of 1E-2 for fires that result in the free fall spill of molten metal plutonium. Though the consequences for this type release would be nearly a factor of 100 higher than evaluated in the CHA, no fires were postulated to occur that would result in this type of release based on the configuration of the Pu/Be in the transport containers.

13. ARF and RF products for postulated chemical releases involving gadolinium nitrate and calcium fluoride were obtained from Section 4.0, *Solids*, of DOE-HDBK-3010-94 (Ref. 13). The bounding ARF x RF of 6.0E-4 for a free-fall powder spill from less than 3 meters was used.

14. Table 5.3-2 provides total effective dose equivalents (TEDEs) for the 100 m co-located worker (onsite occupationally exposed person) and maximally exposed offsite individual (MOI) for a unit curie release for 3-minute and 20-minute release durations. The TEDE values are reported for the 50th percentile dose level without regard to sector for the 100 m worker and the 95th percentile dose level without regard to sector for the MOI. These TEDE values were derived assuming a deposition velocity of 1 cm/s and were obtained from Reference 14. For reference purposes, 100 m worker TEDE values for the 95th percentile dose level are also included in Table 5.3-2 (Ref. 15). These values were derived using a surface roughness of 100 cm, which would be consistent with releases from H-Canyon.

Table 5.3-2 - TEDE Values

Isotope	Release Duration	TEDE (rem/Ci)		
		100 m Worker 50th Percentile	100 m Worker 95th Percentile	MOI 95th Percentile
Pu-239	3 minute	2.70E+01	1.3E+02	1.00E-01
Pu-239	20 minute	1.87E+01	8.4E+01	6.85E-02
Pu-240	3 minute	2.70E+01	1.3E+02	1.00E-01
Pu-240	20 minute	1.87E+00	8.4E+01	6.85E-02

15. The specific activities of the plutonium isotopes are listed in Table 5.3-3 (Ref. 16):

Table 5.3-3 - Plutonium Isotope Specific Activities

Plutonium Isotope	Specific Activity (Ci/g)
Pu-239	6.21E-02
Pu-240	2.27E-01

16. Temporary Emergency Exposure Limits (TEELs) for chemicals evaluated in the CHA were obtained from Reference 17. With the exception of the recommended averaging time, TEELs 1, 2, and 3 have the same definitions as the equivalent ERPG.

Table 5.3-4 – Chemical TEEL Values

Chemical	TEEL-1	TEEL-2	TEEL-3
Beryllium	0.005 mg/m^3	0.025 mg/m^3	0.1 mg/m^3
Gadolinium nitrate, solid	30 mg/m^3	50 mg/m^3	500 mg/m^3
Calcium fluoride	15 mg/m^3	25 mg/m^3	500 mg/m^3

17. To estimate chemical consequences for releases involving Pu/Be chemicals, the following three-minute atmospheric transport plume dilution factors (χ /Q values) for the 100 m collocated worker and MOI were used. The onsite χ /Q values are reported for both the 50th and 95th percentile level and the MOI χ /Q values are reported for the 95th percentile level. These values were obtained from Reference 15.

Table 5.3-5 – χ /Q Values

χ /Q Values (s/m^3)		
100 m Worker 50th Percentile	100 m Worker 95th Percentile	MOI 95th Percentile
6.5E-04	2.9E-03	1.6E-06

A.5.3.2.1.4.2 Assumptions

No assumptions were made in the CHA.

A.5.3.2.2 Hazards Analysis Results

As discussed in Section A.5.3.2.1, the HA consists of three basic analytical activities: hazard identification, hazard categorization, and hazard evaluation. This section provides a discussion of the results of performing these activities.

A.5.3.2.2.1 HAZARD IDENTIFICATION

The H-Canyon PHA does not evaluate receiving Pu/Be Material containers from HB-Line, transporting the containers to the HCMA, and unloading the containers. The hazards unique to the Pu/Be Material campaign include the Pu/Be scrap material, beryllium, and other metallic impurities. The hazardous energy sources were identified in the H-Canyon PHA (Ref. 7) and were used to help create the HE tables contained in Appendix B of the Pu/Be Material CHA (Ref. 1)

A.5.3.2.2.1.1 Radiological Inventory

The dose potential of the Pu/Be radioactive material handled and charged in H-Canyon is lower than the bounding radioactive material inventory analyzed in the SAR. Therefore, the consequences of the postulated events for Pu/Be dissolution are considered bounded by the consequences of similar events analyzed in the H-Canyon SAR.

The radiological material at risk (maximum of 2.0 kilograms Pu-239 equivalent) is based on the shipping containers containing the most radiological material. This is a Safeguards and Security requirement. For analytical purposes, the Pu/Be Material evaluated to determine radiological consequences consists of 2.0 kilograms of Pu-239 and 200 grams of Pu-240.

A.5.3.2.2.1.2 Chemical Inventory

Chemicals associated with Pu/Be Material dissolution are nitric acid, potassium fluoride, gadolinium nitrate, calcium fluoride, and boric acid. The amount of nitric acid, potassium fluoride and boric acid used during Pu/Be Material processing is less than the typical inventories of 300,000 lbs, 500 lbs and 4000 lbs, respectively, listed in Table 8.1-4 in Section 8.0 of the SAR, therefore, hazards associated with these chemicals were not evaluated in the Pu/Be CHA (Ref. 1).

The bounding gadolinium nitrate inventory for chemical consequence evaluation is 1500 lbs, which is above the inventory of 750 lbs outlined in Table 8.1-4 in Section 8.0 of the SAR. The 1500 lb gadolinium nitrate inventory was evaluated in the CHA (Ref. 1). The bounding calcium fluoride inventory for chemical consequence evaluation is 250 lbs. This chemical has not been analyzed in the SAR and is not listed in Table 8.1-4 in Section 8.0 of the SAR, therefore, 250 lbs of calcium fluoride was evaluated in the CHA (Ref. 1). Calcium fluoride and gadolinium nitrate can cause illness if inhaled or swallowed. They are also harmful if contact is made with the eyes and skin.

The maximum amount of beryllium that each shipping container of Pu/Be Material may contain is 315 grams. Exposure (uptake) to beryllium dust or fumes can cause Chronic Beryllium Disease (CBD). CBD can result in an irreversible and sometimes fatal scarring of the lungs.

A.5.3.2.2.2 HAZARD EVALUATION

The HE is performed in accordance with the methodology provided above. The majority of the information required to perform the HE was obtained through reviews of facility documentation, facility walk downs, and discussions with facility personnel. The process areas and activities were analyzed against event categories (e.g., fire, explosion, loss of confinement), postulating event scenarios for the applicable hazardous energy sources and hazardous material sources. The identified event scenarios cover the spectrum of possible events for a given hazard from small consequence events for which existing procedures or equipment is acknowledged to provide adequate protection, to reasonable worst-case conditions, in terms of both event frequency and consequence magnitude.

The results of these activities, documented in the Pu/Be Material CHA, identify all events applicable to receiving, transporting, and loading Pu/Be Material and provide the results of a HE (risk rank) of each event (Ref. 1).

This evaluation process resulted in the identification of eight potential events involving hazards and/or hazardous materials. The risk rank for each postulated event was determined by locating the event on the risk binning matrix, based upon the consequence level and frequency level of the event. The risk ranks are documented in the Pu/Be Material CHA HE Tables (Ref. 1).

Of the seven events identified in the HE, six of the events do not have an unmitigated risk rank of "A1," "A2," or "A3" for the FW, the CW, or the public. This means that the unmitigated consequences of these events did not exceed or challenge the FW, CW, or public high consequence levels shown in Table A.5.8-2 and do not require further quantitative analysis and selection of controls to assure that the evaluation guidelines are not challenged. One event, inadvertent criticality, was evaluated to have an unmitigated Risk Rank of "A3," with high radiological consequences to the FW.

Of the seven events identified in the HE, two events have an unmitigated risk rank of "C" for the FW, the CW, and the public. This means that these two events do not require SC, SS, or Facility Controls to be designated to protect the FW, the CW, and public. Four of the remaining events have a risk rank of "C" for the CW and public and an unmitigated risk rank of "B" for the FW from a radiological release. These four events do not require SC, SS, or Facility Controls to be identified for the CW and the public, however, Facility Controls were identified to protect the FW from the radiological consequences of a Pu/Be release.

The remaining event, inadvertent criticality (event number 3013-6), was evaluated to have an unmitigated risk rank of "A3." Event 3013-6 of Appendix B of the CHA postulated a criticality during the receipt, handling, and unpacking of Pu/Be containers. A criticality results in High unmitigated consequences (Risk Region "A3") to the FW. Criticality Safety evaluated this criticality scenario and determined that it was incredible; therefore, no preventive or mitigative SSCs or ACs are required (Ref. 18).

The following sections provide a brief discussion of the event scenarios documented in the Pu/Be Material CHA HE Tables (Ref. 1). Events falling into Region "B" of the risk matrix require Facility Controls, unless they challenge the EG or SS criteria outlined in Reference 11. If the Region "B" events challenge the EG or SS criteria, then they are considered for SC or SS controls. None of the Region "B" events challenge the EG or SS criteria.

Region "C" events fall below the DOE-STD-3009-94 evaluation criteria and do not require the selection of SC or SS controls. Even though these events do not require SC or SS controls, they can result in undesirable consequences to the worker, the environment, or to facility equipment and operability. For this reason, Facility Controls are listed as outlined in SCD-11 (Ref. 9). These controls are not considered to be part of the safety basis, and management of these controls is left to the facility's discretion, however, they are noted as non-credited items and should be addressed during safety basis implementation activities as well as during the Unreviewed Safety Question process for changes to the facility.

During the course of the HE for transporting and handling of Pu/Be containers, a number of SIHs were identified. SIHs are hazards routinely encountered in general industry and for which national codes and standards, or site standards, exist to guide safe design, control, and operation. None of the SIHs were considered unique and all are hazards that routinely encountered at SRS. The SIHs identified were hazards associated with the handling and movement of containers and overhead lifts. Control of these SIHs will be addressed during the AHA process.

A.5.3.2.2.2.1 Container Transfers

E-1 Fire:

Event 3013-1

Event 3013-1 is a pyrophoric fire occurring in the crane vestibules or the HCMA involving a MAR consisting of 2.0 kilograms of Pu-239, 200 grams of Pu-240, and 315 grams of beryllium. The event may result from spontaneous ignition of plutonium scrap, dropped dissolvable cans, defective can crimp seals, or operator error. The unmitigated frequency of this event is Unlikely. The potential unmitigated radiological and chemical consequences of this event are Negligible to the CW and public receptors. The unmitigated radiological consequences to the FW were evaluated as Moderate (chemical consequences are Negligible). Operating procedures, operator training, the Radiological Control Program, and the Emergency Response Program are Facility Controls identified to reduce the risk to the FW. With these Facility Controls in place, radiological consequences to the FW due to a release are evaluated to be Negligible.

E-3 Loss of Containment/Confinement:

Events 3013-2 through 3013-5b

Event 3013-2

Event 3013-2 is a breach of a dissolvable container resulting in a release of scrap to the operator. This event occurs in the crane vestibules or HCMA. The MAR consists of 2.0 kilograms of Pu-239, 200 grams of Pu-240, and 315 grams of beryllium. The event may result from a dropped container, inadvertent penetration of the container, operator error, or equipment failure of the Pu/Be charging bundle. The unmitigated frequency of this event is Anticipated. The unmitigated radiological and chemical consequences of such an event are Negligible to the CW and public receptors and Low to the FW (chemical consequences are Negligible). Operating procedures, operator training, and the Radiological Control Program are Facility Controls identified to reduce the risk to the FW. With these Facility Controls in place, radiological consequences to the FW are evaluated to be Negligible.

Event 3013-3

Event 3013-3 involves a tear in protective clothing resulting in the operator being contaminated. This event occurs in the HCMA and the MAR consists of residual contamination. The event may result from a sharp object, pinch point or operator error. The unmitigated frequency of this event is Anticipated. The unmitigated radiological consequences of this event are Negligible to the CW and public receptors and Moderate to the FW (chemical consequences are Negligible). Operating procedures and operator training are designated as facility level controls to mitigate the consequences to the facility worker due to contamination. With these Facility Controls in place, radiological consequences to the FW are evaluated to be Low.

Event 3013-4

Event 3013-4 is a release from a Pu/Be charging bundle when it is dropped during crane movement resulting in a radiological release in the HCMA or Hot Canyon. The MAR consists of 2.0 kilograms of Pu-239, 200 grams of Pu-240, and 315 grams of beryllium and the event occurs due to operator error or equipment failure. The unmitigated frequency of this event is Anticipated. The unmitigated radiological consequences of this event are Negligible to the CW and public receptors and Low to the FW (chemical consequences are Negligible). Operating procedures and operator training are designated as facility level controls to mitigate the consequences to the facility worker due to contamination. With these Facility Controls in place, radiological consequences to the FW are evaluated to be Low.

Event 3013-5a

Event 3013-5a is a breach of a calcium fluoride (CaF_2) charging device resulting in a release of CaF_2 to the operator. The event occurs in the HCMA or Hot Canyon. The MAR consists of 250 lbs of CaF_2. The event occurs due to a dropped charging container, inadvertent penetration of the container, operator error, failure of the CaF_2 loading device, or external impact. The unmitigated frequency of this event is Anticipated. The potential unmitigated chemical consequences of this event are Negligible to the FW, the CW, and public receptors. Therefore, specific SC, SS, or facility level controls are not credited for this event.

Event 3013-5b

Event 3013-5b is a breach of a gadolinium nitrate container resulting in the release of gadolinium nitrate to the operator. The event occurs in the 3rd level of H-Canyon. The cause of the event is a dropped bag, operator error, failure of the gadolinium nitrate loading device, or external impact. The MAR consists of 1500 lbs of gadolinium nitrate. The unmitigated frequency of this event is Anticipated. The potential unmitigated chemical consequences of this event are Negligible to the FW, CW, and public receptors. Therefore, specific SC, SS, or facility level controls are not credited for this event.

E-5 Criticality:

Event 3013-6

Event 3013-6 is a criticality resulting in an operator exposure during handling. This event occurs in the crane vestibules or HCMA. The cause of the event is due to an exceeded mass limit, a change in material configuration, or a dropped load. The MAR consists of 2.0 kilograms of Pu-239, 200 grams of Pu-240, and 315 grams of beryllium. The unmitigated frequency of this event is Beyond Extremely Unlikely. The potential unmitigated radiological consequence of this event is Negligible to the public receptor, Moderate to the CW and High for the FW. The Nuclear Criticality Safety Program is designated as a facility level control to mitigate the consequences to the facility worker from a radiological release. The Pu/Be DCA determined that no potential for criticality in the crane vestibules or HCMA for this campaign is credible because a critical configuration can not be assembled (Ref. 18).

E-7 Natural Phenomena:

Events 3013-7

Event 3013-7 is a Natural Phenomena event and is covered under the existing H-Canyon PHA (Ref. 7).

A.5.3.2.3 Planned Design and Operational Safety Improvements

There were no operational safety improvements identified during the hazard analysis process.

A.5.3.2.4 Defense-In-Depth

To compensate for potential facility failures, DiD is based on several layers of protection with successive barriers to prevent the release of hazardous materials to the environment. This approach includes measures to protect the public, workers, and the environment from harm in case any of these barriers are not fully effective. Defining DiD as it exists at a given facility is important for determining a safety basis; however, no requirement to demonstrate a particular number of layers of defense is imposed. Those hazardous events that had unmitigated consequences that did not challenge the EG or SS criteria do not have specific DiD identified, but DiD is provided by the features described within the text of Section A.5.3.2.2.2 corresponding to these events, the systems described in Chapter 2 of the SAR, site-wide programs, as well as those worker protection controls specified in the CHA (Ref. 1). The unmitigated consequences of all events identified in the Pu/Be Material CHA are below the EG and below the SS criteria.

A.5.3.2.4.1 DEFENSE-IN-DEPTH STRUCTURES, SYSTEMS, AND COMPONENTS

Examination of the HE events results in the identification of non-credited SSCs that provide DiD for many of the events. These items are described in the Pu/Be Material CHA (Ref. 1).

SSCs that are major contributors to DiD or worker safety as determined in the HE are considered for designation as SS SSCs. The designation of DiD design features as SS SSCs is based on the qualitative assessment as discussed above. The consequences from the events evaluated in the HE do not challenge the EG or SS criteria; therefore, SS SSCs are not required, nor designated as DiD. However, certain facility level SSCs (GS or PS) prevent the FW from being exposed to unnecessary hazards. The CHA (Ref. 1) lists SSCs that are designated as Facility Controls with their corresponding HA event (see Section A.5.3.2.2.2).

A.5.3.2.4.2 DEFENSE-IN-DEPTH ADMINISTRATIVE FEATURES

The primary method for providing DiD through SACs or ACs is the development of facility procedures. These facility procedures are lower-tiered documents that implement facility specific and site-wide requirements and the requirements of DOE Orders. These procedures also ensure safe facility operation and provide additional means of safety control.

The implementation of facility procedures provides the infrastructure for an outer layer of DiD for potential events associated with Pu/Be Material processing. These programs, and the personnel training associated with development of a thorough understanding of hazards in the workplace, result in a work force that is capable of responding to any accident situation in a manner that mitigates the consequences to individuals at the facility and outside the facility. In addition, many potential accidents are prevented due to the implementation of facility procedures and personnel training.

A.5.3.2.4.3 TECHNICAL SAFETY REQUIREMENTS

DOE-STD-3009-94 provides basic screening criteria to identify DiD features that may require TSR coverage (Ref. 10). These items are identified in Sections A.5.4 and A.5.5 of this Addendum.

A.5.3.2.5 Worker Safety

Design and administrative features that protect workers associated with Pu/Be Material processing are listed as “preventive features” and “mitigative features” in the CHA (Ref. 1). Many of the features protecting workers contribute to the DiD of the facility. Any features identified as requiring protection through TSR coverage are identified in Chapter 8 of the SAR.

This section summarizes the major features protecting workers from the hazards of facility operations involving Pu/Be Material, exclusive of SIH. These features, as outlined in the CHA (Ref. 1), are facility level controls. The major features protecting workers from the hazards of facility operation during Pu/Be Material processing include the following:

- Emergency Response Program
- Building structure/H-Canyon ventilation system
- Operator training and procedures
- Radiological Protection Program

A.5.3.2.6 Environmental Protection

The primary environmental concern with respect to Pu/Be Material processing is the release of radionuclides to the environment. The HA identifies release pathways in which radionuclides could be released and adversely impact the public, site worker, and the environment. The potential for large material releases is minimized by the design and administrative features that contribute to DiD for Pu/Be Material processing. These design features and administrative features protect the public, site worker, and the environment and are discussed in the DiD section. It is appropriate to note that, although there have been no specific accident EGs developed for the environment, protection of the public and site worker as discussed in previous sections also provides de facto protection of the environment. Thus, each of the design and administrative features that contributes to DiD also contributes to environmental protection.

As a result of the DiD discussion, design and operational controls are in place to prevent large releases that could cause significant environmental damage.

A.5.3.2.7 Accident Selection

Based on the DOE-STD-3009-94 (Ref. 10) methodology, HE events whose consequences have the potential to challenge the EG for the public are identified and require further consideration in the accident analysis (Section A.5.3.3) as unique and representative DBAs. Other representative events may also be selected, as deemed appropriate, by the CHA Team.

None of the unmitigated CHA events in Reference 1 require further consideration in the accident analysis as they do not challenge the EG for the public and are not considered to have significant onsite impact.

The CHA determined that an evaluation of the hydrogen generation rate of the Pu/Be Metal material in the dissolvers is required to determine the adequacy of the existing TSR controls to prevent a hydrogen deflagration (Ref. 19). Section A.5.3.3.1 provides this evaluation. The H-Canyon Pu/Be Metal NCSE (Ref. 2) and DCA (Ref. 18) identified criticality controls required as a result of the criticality evaluation. Section A.5.3.3.2 identifies the necessary criticality control set based on the results of the Pu/Be Material NCSE/DCA.

A review of the accident scenarios in Section 8.0 of the SAR did not indicate any accident for which new or revised controls are required for the dissolvers for the Pu/Be Material campaign. The existing analysis in Section 8.0 of the SAR describes all the other potential accidents that could affect the Pu/Be Metal material in the dissolvers and in subsequent processing operations. Any required controls to prevent or mitigate accidents for the dissolvers are in the SAR and TSR and do not need to be included in this Addendum. This Addendum identifies the two accidents,

a hydrogen deflagration and an inadvertent criticality, for which the existing SAR and TSR controls may not be adequate or may require revision to support the Pu/Be Metal campaign. No additional analysis or information on other potential accident scenarios in the dissolvers is required in this Addendum.

A.5.3.3 ACCIDENT ANALYSIS

The accidents to be analyzed in this section are required to be derived from the CHA. Potential accident events identified in the CHA were binned into risk categories based on likelihood of occurrence and consequence. Each risk bin was assigned a risk rank in accordance with DOE-STD-3009-94 (Ref. 10). The standard states that a unique accident analysis should be performed for all hazards that are a major concern in the HA (Risk Rank "A") for the public, and a representative bounding analysis should be performed for all hazards that are a marginal concern in the HA (Risk Rank "B") for the public. Risk Rank "B" events for the public are considered as candidates for the representative bounding analysis. A bounding analysis is performed for all accident types of concern that have the potential to challenge the EG for the public, unless the accident is bounded by a unique accident analysis.

The CHA determined that an evaluation of the hydrogen generation rate of the Pu/Be Metal material is required to determine the adequacy of the existing TSR controls to prevent a hydrogen deflagration in the dissolvers (Ref. 1). Section A.5.3.3.1 provides this evaluation.

The H-Canyon Pu/Be Metal NCSE (Ref. 2) and DCA (Ref. 18) identified criticality controls required as a result of dissolving and downstream processing of the Pu/Be Metal material. Section A.5.3.3.2 identifies the necessary criticality control set based on the results of the Pu/Be Material NCSE/DCA.

A.5.3.3.1 Explosion - Hydrogen Deflagration Due To Radiolysis

Section 8.3.2.2.3 of the SAR discusses hydrogen deflagration accidents in the dissolvers. The hydrogen generation rate during dissolution operations and from the radiolysis of water is different for Pu/Be Material than the materials previously analyzed for dissolution as discussed in the SAR.

Controls to prevent a hydrogen deflagration by maintaining the hydrogen level in the dissolver off–gas to 60% of the LFL (approximately 2.4 vol% hydrogen in dry air at 25 °C) under normal dissolution operations for other materials are contained in the Section 8.0 of the SAR and the TSR (Ref. 19). The SAR and TSR also contain controls to maintain the hydrogen concentrations to less than 25% of the LFL when dissolved radioactive material solutions are temporarily stored in the dissolvers prior to being transferred to other tanks for subsequent processing. The controls are an off–gas purge flow rate during active dissolution (LCO 3.1.9), a minimum purge flow rate from the dip tube instruments during a storage mode (LCO 3.1.8), and a minimum nitric acid concentration SAC for both scenarios (SAC 5.7.2.12.a) in the TSR (Ref. 19). An evaluation of the adequacy of, or need for, these controls to prevent a hydrogen deflagration in the dissolvers during the Pu/Be Material campaign is provided.

The SAR analysis shows that when active dissolution operations are occurring, the water vapor in the dissolver vapor space will inert the atmosphere so that a hydrogen deflagration is not a credible event. Therefore, no specific controls are required to prevent a hydrogen deflagration in the dissolver vapor space during active dissolution operations for the SRS fuel analyzed in the SAR or for the Pu/Be Metal material. The reason is that the vapor space will be saturated with water vapor because of the boiling aqueous solution.

During dissolution operations, the dissolver condenser is operating to condense the water vapor and other condensable vapors and return them to the dissolver. Returning the condensed water to the dissolver pot maintains the liquid level in the pot, which enhances dissolution and also prevents a criticality scenario in the pot from over-concentration of the fissile isotopes in the pot. The uncondensed gases and vapors flow through the dissolver off–gas system to the stack jet where they are exhausted to the atmosphere. Since hydrogen is not condensed by the condenser, the hydrogen concentration in the off–gas system can exceed the LFL. Although the off–gas is saturated with water vapor, the amount of water vapor is not sufficient to inert the off–gas and prevent a hydrogen deflagration. To account for this and to include the temperature effects (temperatures above 25°C lower the LFL of a hydrogen–air mixture), Reference 20 determined the minimum purge air flow rate necessary to maintain the off–gas system less than 60% of the LFL.

Reference 20 was based on processing the uranium–aluminum alloy fuel in which the significant hydrogen generation is from the dissolution of the aluminum. Reference 20 assumed that during the dissolution of the fuel, the hydrogen generated was up to 7 vol% of the total off–gas generated during the dissolution. The total off–gas generation rate was 72 scfm. With an off–gas rate of 72 scfm and 7 vol% hydrogen, Reference 20 determined that a minimum purge flow rate of 40 scfm would be required to maintain the off–gas to less than 60% of the temperature attenuated LFL. This purge air flow and the related purge air flow interlock were carried forward to the SAR accident analysis and the TSR as LCO 3.1.9 (Ref. 19).

SRNL ran a series of experiments to determine the flow sheet for dissolving the Pu/Be Material. As part of the flow sheet development process, SRNL measured the dissolver off–gas generation rates and the concentration of the off–gas components for dissolution of the Pu/Be F-Area Metal Residues (Ref. 21, 22). Reference 23 utilized the SRNL tests for worst case hydrogen generation and applied that data to the H-Canyon dissolving flow sheet. In the dissolvers, there is a high acid availability which produces a low hydrogen generation stoichiometry. There will not be a significant acid molarity drop from starting to ending of the batch dissolution. The conclusion is that the H-Canyon dissolving flow sheet establishes an acid molarity that precludes generating large volumes of hydrogen as well as the formation of plutonium polymer. The hydrogen generation rates for the dissolution of Pu/Be are bounded by existing hydrogen generation rates used to establish the TSR limits, LCO 3.1.9 (Ref. 19), for the dissolution of fuel in the H-Canyon (Ref. 25). Therefore, the Dissolver purge flow rate established in LCO 3.1.9 (minimum of 40 scfm) is adequate to prevent exceeding the 60% limit during the Pu/Be campaign.

The Pu/Be can and the charging bundle holding plate, both made from carbon steel, will also be dissolved. The dissolution of these materials could also generate hydrogen which must be accounted for in determining the hydrogen concentration in the dissolver off–gas. SRNL evaluated the hydrogen generation rate from the dissolution of the carbon steel material. The

experimental evidence indicated that at 2M nitric acid, the hydrogen concentration in the off–gas from dissolution of the carbon steel was less than the 0.1 vol% minimum instrument detection level used in the experiments (Ref. 24). The results of these experiments are that dissolution of the carbon steel will not add measurable amounts of hydrogen to the dissolver off–gas stream.

When the dissolvers are used as a temporary storage vessel, the hydrogen concentration is controlled to 25% of the LFL of a hydrogen–air mixture or 1 vol% hydrogen (at 25 °C) in the dissolver vapor space. Because of the type of material normally dissolved in the H–Canyon dissolvers, the SAR analysis determined that 25% of the LFL could be exceeded from radiolysis of the water in the solution. This analysis was conservative in that it assumed that the dissolver was a totally closed system and that all the hydrogen generated accumulated in the dissolver vapor space. To prevent accumulating more than 25% of the LFL in a short time, the SAR determined that a minimum of 2.3 scfh airflow from the instrument dip tubes was required. (See TSR LCO 3.1.8 [Ref. 19].) This purge air flow rate removed sufficient hydrogen through the vents (e.g., off–gas system, air leaks) on the system to prevent exceeding the 25% limit. The hydrogen generation rate was sufficient that the limit could be exceeded if some hydrogen was not removed from the system.

Because the hydrogen generation rate is dependent on the nitric acid concentration of the solution, the SAR analysis determined that a minimum acid concentration was required to limit the hydrogen generation rate. This minimum acid concentration applies to the dissolver during the dissolution operations and during the storage conditions. The acid concentration affects the hydrogen generation rate during dissolution and from radiolysis. The minimum nitric acid concentration necessary to prevent excessive hydrogen generation with the Mk-22 SRS fuel is 0.3 M and is implemented by TSR AC 5.7.2.12.a (Ref. 19). However, Reference 25 has determined that for the Pu/Be campaign, a minimum nitric acid concentration of greater than or equal to 3.0 M ensures the 2.3 scfh airflow and associated response times established in existing LCO 3.1.8 are adequate.

This Addendum has identified a new control to prevent excessive hydrogen evolution in the dissolvers. The hydrogen concentration from radiolytically generated hydrogen is based on a minimum nitric acid concentration. The minimum nitric acid concentration of 3.0 M based on Reference 25 was selected as an appropriate control. The new control is a SAC.

A.5.3.3.2 Inadvertent Nuclear Criticality

The CHA determined that the Criticality Safety Program will identify criticality controls required as a result of the criticality evaluation. Potential criticalities were analyzed in the NCSE (Ref. 2) and DCA (Ref. 18) developed for the Pu/Be Material campaign.

The NCSE (Ref. 2) developed for the Pu/Be Material campaign identifies the CSLs for the dissolvers. Reference 18 is a stand alone DCA that contains the appropriate double contingency defenses for the Pu/Be Material campaign. Reference 18 contains the potential criticality scenarios and should be consulted for details of the credible and incredible criticality scenarios.

The DCA (Ref. 18) determined that a nuclear criticality event that occurs along the transfer routes of the canned Pu/Be material from HB-Line to the HCMA or in the HCMA and vestibules

is an incredible event. Based on the material type, material mass and configuration, and the security requirements, no specific controls are required to prevent a criticality in these areas when Pu/Be Material is present. Therefore, the remainder of this Inadvertent Nuclear Criticality analysis will be limited to an analysis of a criticality in the dissolvers. Additional solution controls for storage downstream of the dissolvers are found in the H-Canyon DCA (Ref. 26) for boron poisoned plutonium, or the DCA (Ref. 27) for gadolinium poisoned plutonium discard. This Addendum will not consider processes downstream of the dissolver.

Controls that prevent a criticality in the dissolvers are the CSLs specified in the TSR AC section, the dissolver condenser cooling water interlock, an SAC that requires a structural integrity inspection of a dissolver insert each time the insert is placed in the dissolver, the Mk XII dissolver insert and spacers as a DF, the Pu/Be charging bundle as a DF, and the Pu/Be Outer Can as a DF.

- The NCSE (Ref. 2) establishes the basis for the CSLs that are applicable to the dissolvers for the Pu/Be Material. These CSLs are given in the NCSE and are captured in the TSR.
- The SAR and TSR SAC 5.7.2.3.i states "An inspection of the structural integrity of the Dissolver inserts shall be completed each time the inserts are inserted in the dissolver." The intent of this control is to ensure that the geometry of the dissolver insert is maintained to the geometry that was analyzed in the NCSEs. If the insert geometry is changed (e.g., the wells become larger from the walls being deformed outward) the spacing between the fissile material in the inserts may change. If the spacing is reduced, the smaller spacing could allow the fissile masses to interact and cause a criticality. The SAR and TSR SAC was established to ensure that each time an insert is put into the dissolver, the design features related to criticality safety of the insert were maintained. Since this requirement is established by the existing SAR and TSR (Ref 19) and is applicable for this material, the Pu/Be Material DCA (Ref. 18) contains a scenario and double contingency requirements to verify that the Mk XII insert meets the appropriate design dimensions. Therefore, the existing TSR AC will be considered a control in this Addendum.
- One method of ensuring criticality safety in the dissolvers is to use an insert in the dissolver that limits the amount of material that can be charged to the dissolver and also establishes minimum spacing requirements between the fissile masses in the dissolver. Specifically, the Mk XII insert and spacers are credited in the Pu/Be DCA (Ref. 18) with having minimum 6.75–inch spacing between the wells of the insert. This minimum spacing provides neutron isolation for the individual wells. Therefore, the Mk XII insert and spacers are a DF for the Pu/Be campaign.
- To further protect the Pu/Be Material configuration and the mass of material that can be charged, a specially designed charging bundle and can were developed. The Pu/Be outer can and charging bundle are designed such that they will allow only one Pu/Be outer can to be inserted into a bundle. The criticality safety function is the design of the outer cans that hold the Pu/Be Material and the Pu/Be charging bundle. These are passive elements that must exist before the outer cans and charging bundle can be used. The dimensions of the Pu/Be outer cans and charging bundle are the

passive DFs credited in the DCA (Ref. 18). Since these are passive DFs, the Pu/Be outer can and charging bundle are SS DFs per the current guidance for selecting SS SSCs to prevent a criticality. Therefore, specific dimensions and unique attributes of the Pu/Be outer can and charging bundle are credited as DFs in Section A.5.4.

- One method to exceed the concentration CSL during dissolution is to boil off too much water from the dissolver solution. To minimize the amount of water lost from boil–off, the dissolver has a water cooled condenser that condenses the water vapor and returns it as a liquid to the dissolver pot. This maintains the liquid level in the pot above a minimum level at which over-concentration of the fissile isotopes could occur. The dissolver condenser has a TSR credited interlock that automatically stops steam flow to the dissolver if the condenser cooling water flow is below a minimum flow rate. The DCA credits the condenser cooling water flow interlock as a defense to prevent a criticality from over-concentration of the dissolver solution. Since the condenser cooling water interlock is an automatic feature, it is a SS feature to prevent a criticality in the dissolver. The condenser cooling water flow interlock is included in the SAR and TSR as a SS SSC. TSR LCO 3.1.10 is the cooling water condenser flow interlock LCO. Because this SSC and its related LCO are credited in the DCA (Ref. 18) for the Pu/Be Material campaign, it is an SS feature for the Pu/Be Material campaign and is listed as a control in this Addendum to prevent a criticality in the dissolvers. The specific control credited is the existing TSR LCO 3.1.10 (Ref. 19).

A.5.4 SAFETY STRUCTURES, SYSTEMS AND COMPONENTS

A.5.4.1 INTRODUCTION

Per the methodology in DOE-STD-3009-94, this Section of the Pu/Be Material Processing Addendum provides details on those facility SSCs that are designated as SC and SS. Per the SAR, H-Canyon is a Hazard Category 2 facility and has SC and SS functions. Certain SSCs are already designated as SC or SS and are discussed in the SAR.

A.5.4.2 SAFETY CLASS STRUCTURES, SYSTEMS, AND COMPONENTS

SC SSCs structures required for the charging and dissolution of the Pu/Be Material in H-Canyon are defined in Sections 8.3 and 8.4 of the SAR. There are no additional SC SSCs identified as a result of the analysis in this Addendum for receiving or dissolving of the Pu/Be Material.

A.5.4.3 SAFETY SIGNIFICANT STRUCTURES, SYSTEMS, AND COMPONENTS

SS SSCs required for the charging and dissolution of the Pu/Be Material in H-Canyon are defined in Sections 8.3 and 8.4 of the SAR. For dissolution of Pu/Be in the dissolvers, the DCA (Ref. 18) identified the Mk XII Dissolver Insert and Spacers, the Pu/Be Charging Bundle, and the Pu/Be Outer Can as SS SSCs.

A.5.4.3.1 Mk XII Dissolver Insert And Spacers

A.5.4.3.1.1 SAFETY FUNCTION

The safety function of the Mk XII dissolver insert and spacers is to protect FWs from a criticality in the dissolvers during the Pu/Be Material campaign.

A.5.4.3.1.2 SYSTEM DESCRIPTION

The Mk XII insert has four large slots for Mk 22 fuel bundles, which are 2.5 inches by 4.125 inches. This insert is not suitable for the Pu/Be campaign without modification to place one smaller well within each slot. The installed Mk XII insert has spacers at the center of the insert that extend out 6.5 inches into the Mk XII charging slot to limit the space available for charging Mark 22 fuel bundles. These spacers can also be utilized for or with the modified Mk XII insert/spacers for Pu/Be charging.

A.5.4.3.1.3 FUNCTIONAL REQUIREMENTS

The functional requirement of the Mk XII dissolver insert and spacers is to prevent a criticality in the dissolvers while dissolving Pu/Be Material. The DF of the Mk XII dissolver insert is the dimensions, spacing, and configuration of the insert and spacers that ensure a critical mass and configuration of fissile material is not reached in the canyon dissolver. The insert ensures the desired configuration is maintained in the dissolver at all times. Nuclear criticality safety is maintained inside a well by limiting the mass, and by the minimum 6.75–inch designed spacing of the wells to provide neutron isolation for the individual wells. The Mk XII dissolver insert and spacers are designated SS.

A.5.4.3.1.4 SYSTEM EVALUATION

The Mk XII dissolver insert and spacers are designed to meet the safety functions stated above. The Mk XII dissolver insert and spacers design ensures that the insert meets the requirement outlined in the DCA (Ref. 18).

A.5.4.3.1.5 TECHNICAL SAFETY REQUIREMENT CONTROLS

The Mk XII dissolver insert and spacers is a passive SSC and is controlled in the TSR as a DF (TSR Section B.1.36). The Configuration Control Program covered in the ACs section of the TSR along with the DFs section of the TSR ensures that no un-reviewed changes occur to DFs.

A.5.4.3.2 Pu/Be Charging Bundle

A.5.4.3.2.1 SAFETY FUNCTION

The safety function of the Pu/Be charging bundle is to protect FWs from a criticality in the dissolvers during the Pu/Be Material campaign.

A.5.4.3.2.2 SYSTEM DESCRIPTION

The Pu/Be Material will be repackaged in HB-Line into dissolvable carbon steel Pu/Be cans. These cans will be loaded into a Pu/Be charging bundle in the HCMA just prior to being charged to the Mk XII insert in the dissolver. One Pu/Be can will be put in a Pu/Be charging bundle and one Pu/Be charging bundle will be charged to each well in the Mk XII insert (with spacers).

A.5.4.3.2.3 FUNCTIONAL REQUIREMENTS

The functional requirement of the Pu/Be charging bundle is to prevent a criticality in the dissolvers while dissolving Pu/Be Material. The DF of the Pu/Be charging bundle is the tube dimension and stop/bundle pin location that limit the charge to one can per bundle. The stop/bundle pin is a short rod inserted through the charging bundle such that the placement of the pin physically prevents more than one can of material from being inserted into the length of charging bundle. Another DF of the Pu/Be charging bundle is the dimensions of the bundle that ensure that only one Pu/Be charging bundle fits into a Mk XII insert well. The Pu/Be charging bundle is designated SS.

A.5.4.3.2.4 SYSTEM EVALUATION

The Pu/Be charging bundle is designed to meet the safety functions stated above. The Pu/Be charging bundle design ensures that the bundle meets the requirement outlined in the DCA (Ref. 18).

A.5.4.3.2.5 TECHNICAL SAFETY REQUIREMENT CONTROLS

The Pu/Be charging bundle is a passive SSC and is controlled in the TSR as a DF (TSR Section B.1.37). The Configuration Control Program covered in the ACs section of the TSR along with the Design Features section of the TSR ensures that no un-reviewed changes occur to DFs.

A.5.4.3.3 Pu/Be Outer Can

A.5.4.3.3.1 SAFETY FUNCTION

The safety function of the Pu/Be outer can is to protect FWs from a criticality in the dissolvers during the Pu/Be Material campaign.

A.5.4.3.3.2 SYSTEM DESCRIPTION

The Pu/Be Material will be repackaged in HB-Line into dissolvable carbon steel Pu/Be cans. These cans will be loaded into a Pu/Be charging bundle in the HCMA just prior to being charged to the Mk XII insert in the dissolver. One Pu/Be can will be put in a Pu/Be charging bundle and one Pu/Be charging bundle will be charged to each well in the Mk XII insert (with spacers).

A.5.4.3.3.3 FUNCTIONAL REQUIREMENTS

The functional requirement of the Pu/Be outer can is to prevent a criticality in the dissolvers while dissolving Pu/Be Material. The DF of the Pu/Be outer can is the dimensions of the can that ensures that the charging bundle can hold only one Pu/Be outer can. The outer can has a minimum outside diameter and height such that only one can will fit into the Pu/Be charging bundle. These features ensure criticality safety during Pu/Be dissolution. The Pu/Be outer can is designated SS.

A.5.4.3.3.4 SYSTEM EVALUATION

The Pu/Be outer can is designed to meet the safety functions stated above. The Pu/Be outer can design ensures that the can meets the requirement outlined in the DCA (Ref. 18).

A.5.4.3.3.5 TECHNICAL SAFETY REQUIREMENT CONTROLS

The Pu/Be outer can is a passive SSC and is controlled in the TSR as a DF (TSR Section B.1.38). The Configuration Control Program covered in the ACs section of the TSR along with the Design Features section of the TSR ensures that no un-reviewed changes occur to DFs.

A.5.4.4 SPECIFIC ADMINISTRATIVE CONTROLS

An AC is designated as an SAC if (1) it is identified in the SAR as a control needed to prevent or mitigate an accident scenario, and (2) it has a safety function that would be SC or SS if the function were provided by an SSC. SACs may also be needed to protect important initial conditions and assumptions of the hazard or accident analysis or provide the main mechanisms for hazard control.

A new SAC is required for the dissolution of the Pu/Be Material in H-Canyon, as defined in Section A.5.3.3.1 of this Addendum. There are no additional SACs identified as a result of the analysis in this Addendum for receiving, transporting, and unpacking of the Pu/Be Material.

A.5.4.4.1 Flammable Gas/Vapor Dilution Process Controls - Hydrogen Deflagration in the Dissolver During Pu/Be Metal Processing (TSR 5.7.2.12.l)

The nitric acid concentration in Dissolvers 6.1D or 6.4D shall be greater than or equal to 3.0M at all times when Pu/Be Material is present to prevent excessive hydrogen evolution.

A.5.4.4.1.1 SAFETY FUNCTION

This AC is designated as an SAC because it serves an SS safety function that cannot be performed by an engineered safety system. The safety function is to ensure that a minimum nitric acid concentration is maintained during Pu/Be Material processing to ensure that the hydrogen generation rate is below that assumed in the accident analysis. There are instruments (e.g., conductivity meters) that can measure the nitric acid concentration, however, it is not practical to use them in the H–Canyon dissolvers during Pu/Be Material processing. This control is implemented and verified by ensuring that the nitric acid concentration in the dissolver is above the level that will ensure that the acidity endpoint concentration remains greater than or equal to 3.0 M in the dissolver at the end of the dissolution process. This SS safety function minimizes the potential for excessive hydrogen generation that could lead to a hydrogen deflagration in the H–Canyon dissolvers during Pu/Be Material processing (Section A.5.3.3.1).

A.5.4.4.1.2 SPECIFIC ADMINISTRATIVE CONTROL DESCRIPTION

Hydrogen is generated in the dissolvers from chemical reactions and by the radiolysis of water. The chemically generated hydrogen occurs primarily in the dissolvers from the dissolution of the Pu/Be Material. Hydrogen generation from the radiolysis of water occurs in all the H–Canyon and OF–H process vessels where there is radioactive material in contact with water. The acid molarity (concentration) is an important factor in limiting hydrogen generation rates from chemical reactions and the radiolysis of water. As the acid concentration decreases, more free hydrogen is generated based on the reactions occurring in the dissolver. Some of the hydrogen ions generated will react with any free NO_3^- radicals in the solution. Controlling the acid concentration ensures a minimum nitrate ion concentration, which provides the nitrate ions to react with the H^+ ion. This helps ensure that the amount of hydrogen actually generated is less than that calculated in the hydrogen calculations. This control ensures that the conservative hydrogen generation calculations used for chemically and radiolytically generated hydrogen are protected.

A.5.4.4.1.3 FUNCTIONAL REQUIREMENTS

The requirement is to ensure that the acid concentration in the H–Canyon dissolvers during Pu/Be Material processing remains above a minimum value to limit the amount of hydrogen

released in the reactions and by the radiolysis of water. By ensuring a minimum nitric acid concentration is maintained, the SAC reduces the potential to exceed the LFL of a hydrogen–air mixture and thereby helps prevent a hydrogen deflagration in the dissolvers. The functional requirement is to provide, via procedures, a minimum nitric acid concentration in the dissolvers when Pu/Be Material is present.

A.5.4.4.1.4 SPECIFIC ADMINISTRATIVE CONTROL EVALUATION

This SAC ensures that a positive mechanism exists to minimize the potential for a hydrogen deflagration in the H–Canyon dissolvers when Pu/Be Material is present. This SAC is implemented by H–Canyon operating procedures. This SAC is effective in preventing a hydrogen deflagration and release of radioactive material in the H–Canyon dissolvers.

A.5.5 DERIVATION OF TECHNICAL SAFETY REQUIREMENTS

A.5.5.1 INTRODUCTION

Per the methodology in DOE-STD-3009-94, this Section of the Pu/Be Material Processing Addendum provides information necessary to support the safety basis requirements for the derivation of the TSR. Information supporting the derivation of the existing TSR is provided in Sections 8.3 and 8.4 of the SAR. Additional TSRs are not required for processing Pu/Be Material.

A.5.5.2 TECHNICAL SAFETY REQUIREMENT COVERAGE

TSR coverage for the H-Canyon facility is based on the methodology derived for the entire facility and discussed in the H-Canyon SAR, Chapter 8. This coverage includes the areas required for Pu/Be Material processing (e.g., HCMA and vestibules, Hot Canyon).

A.5.5.3 TECHNICAL SAFETY REQUIREMENT DERIVATION

Tables 8.4-1, 8.4-2, 8.4-3, and 8.4-4 of the SAR provide a summary listing of the safety SSCs, SACs, and ACs that the safety analysis requires to prevent or mitigate a hazard or accident. There are no new LCOs or associated SRs for the Pu/Be Material campaign, and no existing ACs have been modified with additional controls.

The following sections discuss in detail the bases and derivation of the TSRs applicable to Pu/Be Material. New TSR controls for Pu/Be Material are credited in the form of a SAC and DFs.

The H-Canyon TSR has LCOs to prevent hydrogen deflagrations during and after dissolution (Ref. 19). These preventive controls are an off–gas purge flow rate during active dissolution (LCO 3.1.9) and a minimum purge flow rate from the dip tube instruments during a storage mode (LCO 3.1.8). These controls have been determined to be adequate for the dissolution of Pu/Be Material and subsequent temporary storage as discussed in Section A.5.3.3.1.

A.5.5.3.1 Administrative Controls

The following section only discusses the new ACs for Pu/Be Material.

Flammable Gas/Vapor Dilution Process Controls (AC 5.7.2.12)

Pu/Be Material processing invokes the same Flammable Gas/Vapor Dilution Process Controls with the following added element:

- **[Specific Administrative Control]** The nitric acid concentration in Dissolvers 6.1D or 6.4D shall be greater than or equal to 3.0M at all times when Pu/Be Material is present to prevent excessive hydrogen evolution.

A.5.5.3.2 Design Features

There are three new DFs associated with Pu/Be Material:

- Mk XII Dissolver Insert and Spacers
- Pu/Be Charging Bundle
- Pu/Be Outer Can

A.5.6 PROGRAMMATIC SAFETY DESCRIPTIONS

A.5.6.1 INTRODUCTION

A.5.6.1.1 Objective

The purpose of this section is to provide information that is compliant with DOE-STD-3009-94, Change 3 (Ref. 10), and 10 CFR 830 (Ref. 28) for identified program areas that are necessary for the processing of Pu/Be Material. Programmatic information for processing material is already contained in the existing H-Canyon Facility SAR and TSR (Ref. 19); therefore, it is not reiterated here.

A.5.7 REFERENCES

1. Consolidated Hazard Analysis for the H-Canyon Dissolution of Pu/Be Materials (U), WSRC-TR-2006-00199, Rev. 1, Washington Safety Management Solutions, Aiken, SC, May 2007.

2. Nuclear Criticality Safety Evaluation: Dissolution of Plutonium-Beryllium Scrap in H-Canyon, N-NCS-H-00199, Rev. 1, Washington Safety Management Solutions, Aiken, SC, June 2007.

3. Dissolution of FB-Line Residues Containing Beryllium Metal. WSRC-TR-2005-00042, Rev. 0. Westinghouse Savannah River Company. Aiken, SC. February 2005.

4. Mk 42 Fuel Tubes in F-Canyon, Part II. WSRC-TR-99-00196, Rev. 0. Westinghouse Savannah River Company. Aiken, SC. June 1999.

5. Dissolution of Scrub Alloy and Anode Heel in H-Canyon. WSRC-TR-2003-00276, Rev. 0. Westinghouse Savannah River Company. Aiken, SC. June 2003.

6. Complexation of Fluoride by Boron and Gadolinium in H-Canyon Dissolution Flowsheets. WSRC-CP-2006-00001, Rev. 0. Washington Savannah River Company, Aiken, SC, May 2006.

7. H-Canyon Preliminary Hazard Analysis, H-Canyon & Outside Facilities, WSRC-TR-95-0035, Rev. 5, Westinghouse Savannah River Company, Aiken, SC, February 2007.

8. Hazard Categorization and Accident Analysis Techniques for Compliance with DOE Order 5480.23, Nuclear Safety Analysis Reports, DOE-STD-1027-92, Change Notice 1. U. S. Department of Energy, Washington, DC, September 1997.

9. Consolidated Hazard Analysis Process (CHAP) Program & Methods Manual, SCD-11, Rev. 4, Westinghouse Savannah River Company, Aiken, SC, June 2005.

10. Preparation Guide for U.S. Department of Energy Nonreactor Nuclear Facility Documented Safety Analysis, DOE-STD-3009-94 Change 3, U.S. Department of Energy, Washington, DC, March 2006.

11. "Functional Classifications," Procedure 2.25, Rev. 14, Conduct of Engineering and Technical Support Procedure Manual (U), WSRC Procedure Manual E7, Westinghouse Savannah River Company, Aiken, SC, January 2003.

12. Functional Classification Methodology Manual, WSRC-TM-93-9, Rev. 5, Westinghouse Savannah River Company, Aiken, SC, November 2004.

13. Airborne Release Fractions/Rates and Respirable Fractions for Nonreactor Nuclear Facilities, DOE-HDBK-3010-94, U. S. Department of Energy, Washington, DC, December 1994.

14. Geer, D., et.al., RADScreen – A Radiological Consequence Analysis Lookup Table of Radionuclides for Hazard Analysis at SRS (U), S-CLC-G-00324, Rev. 0, Washington Safety Management Solutions, Aiken, SC, September 2006.

15. Knight, J. T., F-Area and H-Area Tank Farm Radiological Consequence Analysis for Unit Curie Release, S-CLC-F-00593, Rev. 0, Washington Safety Management Solutions, Aiken, SC, July 2006.

16. East, J. M., Specific Activities of 167 Common Accident Analysis Radionuclides, N-CLC-G-00040, Rev. 0, Westinghouse Savannah River Company, Aiken, SC, May 1996.

17. AEGLs, ERPGs, or Rev. 21 TEELs for Chemicals of Concern 2005, Department of Energy, Washington DC.

18. Nuclear Criticality Safety Evaluation: Double Contingency Analysis for Dissolution of Plutonium-Beryllium Scrap in H-Canyon, N-NCS-H-00200, Rev. 2, Washington Safety Management Solutions, Aiken, SC, June 2007.

19. H-Canyon & Outside Facilities, Technical Safety Requirements, WSRC-TS-96-19, Rev. 16, Washington Savannah River Company, Aiken, SC. June 2007.

20. H–Canyon Dissolver Hydrogen Dilution Calculations Using Off–Gas Specific Lower Flammability Limit (LFL), X–CLC–H–00473, Rev. 0, Westinghouse Savannah River Company, Aiken, SC, October 2003.

21. Dissolution of FB-Line Residues Containing Beryllium Metal. WSRC-TR-2005-00042, Rev. 0. Westinghouse Savannah River Company. Aiken, SC. February 2005.

22. Observations During the Dissolution of Plutonium and Beryllium Metals. WSRC-ATS-2005-00043, Rev. 0. Internal WSRC Memorandum, T. S. Rudisill, M. L. Crowder, and M. G. Bronikowski to F. R. Weitz. Westinghouse Savannah River Company. Aiken, SC. June 27, 2005.

23. H-Canyon Purge Rate for Dissolving FB-Line Metal Residues Containing Beryllium. X-CLC-H-00558. Rev. 1. Westinghouse Savannah River Company. Aiken, SC. July 2005.

24. Carbon Steel and Magnesium Oxide Dissolution for H–Canyon Process Applications. WSRC–TR–2004–00035, Rev. 0. Westinghouse Savannah River Company. Aiken, SC. January 2004.

25. H-Canyon Purge Rate for Dissolving 3013 Pu/Be Materials. X-CLC-H-00604. Rev. 1. Washington Savannah River Company. Aiken SC. June 2007.

26. H-Canyon Double Contingency Analysis, N-NCS-H-00037, Rev. 16, Washington Safety Management Solutions, Aiken, SC, March 2007.

27. NCSE: Double Contingency for Receipt, Transfer, Storage, and Neutralization of HB-Line Plutonium/Uranium Solutions Poisoned with Gadolinium, N-NCS-F-00179, Rev. 1, Washington Safety Management Solutions, Aiken, SC, April 2005.

28. Nuclear Safety Management. Code of Federal Regulations, Title 10 Part 830, U.S. Department of Energy, Washington, DC, 2001.

A.5.8 METHODOLOGY TABLES

Table A.5.8-1 Consequence Evaluation Levels for Hazard Receptors

Acronym	Description	Frequency Level ($year^{-1}$)
A	Anticipated, Expected	$f \geq 10^{-2}$/yr.
U	Unlikely	$10^{-4} \leq f < 10^{-2}$/yr.
EU	Extremely Unlikely	$10^{-6} \leq f < 10^{-4}$/yr.
BEU	Beyond Extremely Unlikely	$f < 10^{-6}$/yr.

Table A.5.8-2 Consequence Evaluation Levels for Hazard Receptors

Consequence Level (Abbreviation)		Offsite Public Receptor	Facility Worker	Co-Located Worker
High (H)	Non-rad/Non-Chemical Injury		Prompt worker fatality, serious injury that is immediately life threatening or permanently disabling	Prompt worker fatality, serious injury that is immediately life threatening or permanently disabling
	Radiological	C ≥ 25.0 rem	C ≥ 100 rem; or radiological material quantity exceeds Hazard Category 3 threshold (per DOE-STD-1027); or high consequence injury due to radiological release or exposure	. Ç≥ 100 rem; or high consequence injury due to radiological release or exposure
	Chemical	C ≥ ERPG-2	Uniform distribution of total release C ≥ ERPG-3 or high consequence injury due to chemical release or exposure	C ≥ ERPG-3; or ≥ 29 CFR 1910.119 TQ released; or high consequence injure due to chemical release or exposure
Moderate (M)	Non-rad/Non-Chemical Injury		Serious injury, no immediate loss of life, no permanent disabilities, hospitalization required	Serious injury, no immediate loss of life, no permanent disabilities, hospitalization required
	Radiological	5.0 ≤ C < 25 rem	25 ≤ C < 100 rem; or moderate consequence radiological related injury	25 ≤ C < 100 rem; or moderate consequence radiological related injury
	Chemical	ERPG-1 ≤ C < ERPG-2	Uniform distribution of total release ERPG-2 ≤ C < ERPG-3; or moderate consequence chemical related injury	ERPG-2 ≤ C < ERPG-3; or moderate consequence chemical related injury
Low (L)	Non-rad/Non-Chemical Injury		Minor injuries, no hospitalization	Minor injuries, no hospitalization
	Radiological	0.5 ≤ C < 5.0 rem	5.0 ≤ C < 25 rem; or low consequence radiological related injuries	5.0 ≤ C < 25 rem; or low consequence radiological related injuries
	Chemical	PEL-TWA ≤ C < ERPG-1	Uniform distribution of total release ERPG-1 ≤ C < ERPG-2; or low consequence chemical related injuries	ERPG-1 ≤ C < ERPG-2; or low consequence chemical related injuries
Negligible (N)	All	< Low	< Low	< Low

Note: Safety Class or Safety Significant controls are required if event consequence challenge (i.e., does not have to exceed) high radiological or chemical exposure consequence. Safety Significant controls are required in nuclear facilities for prompt fatality, life threatening, or permanently disabling injuries that are not covered by national codes and standards.

Emergency Response Planning Guideline (ERPG)
Permissible Exposure Limit (PEL)
Time Weighted Average (TWA)

Given the above discussion it is concluded that it is not credible for this scenario to result in a criticality accident provided the following elements are met:

1. The uranium enrichment is ≤75wt% U-235 or U concentration is ≤0.1 g/L (protected as a control in Scenario 5.1 and therefore does not require an LOI).
2. The uranium:plutonium mass ratio is ≤4.3:1(protected as a control in Scenario 5.1 and therefore does not require an LOI).
3. The Eq. Pu concentration is ≤ 1.72 g/L prior to neutralization.
4. The Tank 16.1 agitator is operating during neutralization.
5. The Tank 16.1 and cold feed tank liquid level is monitored during caustic addition.
6. MC&A attractiveness level E for discards.