WSRC-SA-2003-00002
Rev. 0

WASTE SOLIDIFICATION BUILDING PRELIMINARY DOCUMENTED SAFETY ANALYSIS

EXECUTIVE SUMMARY

JULY 2008

SAVANNAH RIVER SITE
Aiken, SC 29808 • www.srs.gov

PREPARED FOR THE U.S. DEPARTMENT OF ENERGY UNDER CONTRACT NO. DE-AC09SR18500

DISCLAIMER

This document was prepared by Washington Safety Management Solutions LLC (WSMS), under contract with Washington Savannah River Company (WSRC), subject to the warranty and other obligations of that contract and in furtherance of WSRC's contract with the United States Department of Energy (DOE).

Release to and Use by Third Parties. As it pertains to releases of this document to third parties, and the use of or reference to this document by such third parties in whole or in part, neither WSMS, WSRC, DOE, nor their respective officers, directors, employees, agents, consultants or personal services contractors (i) make any warranty, expressed or implied, (ii) assume any legal liability or responsibility for the accuracy, completeness, or usefulness, of any information, apparatus, product or process disclosed herein or (iii) represent that use of the same will not infringe privately owned rights. Reference herein to any specific commercial product, process, or service by trademark, name, manufacture or otherwise, does not necessarily constitute or imply endorsement, recommendation, or favoring of the same by WSMS, WSRC, DOE or their respective officers, directors, employees, agents, consultants or personal services contractors. The views and opinions of the authors expressed herein do not necessarily state or reflect those of the United States Government or any agency thereof.

CONTENTS

Page

Executive Summary E-1

E.1 Facility Background and Mission E-1

E.1.1 Facility Background E-1

E.1.2 Facility Mission E-1

E.2 Facility Overview E-1

E.2.1 Facility Location E-1

E.2.2 Waste Solidification Building Facility Description E-2

E.3 Waste Solidification Building Hazard Categorization E-2

E.4 Safety Analysis Overview E-3

E.4.1 Hazards Analysis E-3

E.4.2 Accident Analysis E-3

E.4.3 Significant Hazards Associated with Waste Solidification Building Processes E-4

E.4.4 Major Preventive and Mitigative Features in the Waste Solidification Building Control Set E-5

E.4.5 Analysis Application E-6

E.5 Organizations E-7

E.6 Safety Analysis Conclusions E-7

E.7 Preliminary Documented Safety Analysis Organization E-7

E.8 DOE-STD-1189-2008 ..... E-7

TABLES

Page

Table E.1 Summary of Major Design Basis Accidentss E-5

Table E.2 Safety Significant Structures, Systems, and Components Necessary to Protect the Co-located Worker E-6

ACRONYMS

BDBA	Beyond Design Basis Accident
Ci	Curie(s)
DBA	Design Basis Accident
DOE	U.S. Department of Energy
HAW	High Activity Waste
HC	Hazard Category
LAW	Low Activity Waste
MFFF	Mixed Oxide Fuel Fabrication Facility
NPH	Natural Phenomena Hazard
PDCF	Pit Disassembly and Conversion Facility
PDSA	Preliminary Documented Safety Analysis
SRS	Savannah River Site
SSC	Structure, System, and Component
STD	Standard
TBP	Tributyl Phosphate
TRU	Transuranic
WSB	Waste Solidification Building
WSRC	Washington Savannah River Company

EXECUTIVE SUMMARY

E.1 FACILITY BACKGROUND AND MISSION

E.1.1 FACILITY BACKGROUND

The purpose of the Waste Solidification Building (WSB) is to treat specific high and low activity liquid waste streams from the Mixed Oxide Fuel Fabrication Facility (MFFF) and the Pit Disassembly and Conversion Facility (PDCF). PDCF operations include receiving weapons grade plutonium, converting the plutonium to an oxide, and shipping the oxide to MFFF. MFFF operations include the conversion of surplus plutonium oxide, depleted uranium oxide, and the PDCF plutonium oxide into mixed oxide fuel to be used in commercial nuclear reactors.

E.1.2 FACILITY MISSION

As part of the Plutonium Disposition Mission at the Savannah River Site (SRS), the WSB processes the PDCF and MFFF liquid waste streams into a disposable waste form. The liquid streams enter the WSB via dedicated underground transfer lines from their respective facilities. The following waste streams from PDCF and MFFF are received in the WSB:

- PDCF laboratory liquid stream
- MFFF high activity stream
- MFFF stripped uranium stream

The liquid streams are processed into solid waste forms acceptable for shipment and disposal as transuranic (TRU) waste, low level waste, or a liquid which can be treated at the Effluent Treatment Project. The WSB is scheduled to be operational in 2013 to support MFFF operations. The WSB will support MFFF and PDCF over a 15-year operation period, and the facility has a 30-year design life.

E.2 FACILITY OVERVIEW

E.2.1 FACILITY LOCATION

The WSB is a new building at SRS. SRS occupies an area of approximately 300 square miles on the upper Atlantic Coastal Plain of South Carolina. SRS is bounded on the southwest by the Savannah River, is approximately 25 miles southeast of Augusta, Georgia, and 20 miles south of Aiken, South Carolina. The location of SRS, relative to surrounding population centers, is described in Chapter 1.

WSB is located in the 200-F Area. Area plan views provided in Chapter 1 illustrate the location of the WSB compared to F-Separations Area. The *Savannah River Site DSA Support Document – Site*

Characteristics and Program Descriptions, WSRC-IM-2004-00008, Rev. 1, August 2007, describes SRS and the sitewide utilities, fire support, medical support, emergency services, and centralized management programs that support all of the SRS operating facilities.

E.2.2 WASTE SOLIDIFICATION BUILDING FACILITY DESCRIPTION

The process building is a reinforced concrete structure. The site also contains a covered pad for waste containers. The reinforced concrete High Activity Waste (HAW) process room configuration is used to contain the airborne contamination and shield the direct dose field associated with the HAW process. The reinforced concrete structure houses the HAW and Low Activity Waste (LAW) cementation processes, the analytical laboratory, the control room, and some balance of plant services. Activities carried out in the structure include waste receipt, waste concentration, waste neutralization, and waste cementation. Cementation will be performed in 55-gallon drums inside dedicated enclosures. There are external areas dedicated to cold chemical feeds, steam generation, administration, electrical feeds, diesel electrical generation, the exhaust stack, floor drain collection, and drum receipt and storage.

Secondary containment features such as dikes, tanks, sumps, and jackets with associated leak detection and/or monitoring are provided for those areas with liquid waste spill potential. The major pieces of process equipment are tanks, pipes, evaporators, cementation equipment, agitators, and pumps.

The process areas of the WSB are divided into five sections:

- HAW process,
- LAW process,
- laboratory,
- cementation area, and
- control room.

The liquid waste handling process is completed in the following steps:

- waste receipt,
- waste volume reduction,
- waste neutralization,
- waste cementation,
- storage, and
- shipping (solid waste forms to E-area and liquid effluent to the Effluent Treatment Project).

E.3 WASTE SOLIDIFICATION BUILDING HAZARD CATEGORIZATION

The WSB is classified as Hazard Category (HC) 2 in accordance with Department of Energy (DOE) Standard (STD) 1027-92. No segmentation is credited in the facility. An initial hazard categorization, performed for the WSB in accordance with DOE-STD-1027-92, determined the WSB to be HC-2. The

inventory of Am-241 (6.3E+04 curies [Ci]) exceeds the HC-2 threshold of DOE-STD-1027-92 (5.5E+01 Ci Am-241). Major chemical inventories of concern in the facility are significant quantities of sodium hydroxide and nitric acid. There are also various chemicals in small quantities stored and used in the laboratory. The chemical inventories do exceed RQs but do not exceed any TQ, or TPQ values. The WSB is chemically classified as a low hazard chemical facility.

E.4 SAFETY ANALYSIS OVERVIEW

The identification and classification of the potential hazards and accidents associated with the operation of the WSB are discussed and evaluated in Chapter 3 of this Preliminary Documented Safety Analysis (PDSA). Chapter 3 identifies and assesses potential hazards associated with the WSB operation. The hazards analysis was used in the selection of the Design Basis Accidents (DBAs) for further detailed quantitative analysis. Safety Significant Structures, Systems, and Components (SSCs), design features, administrative controls, and specific administrative controls required for major contributors to Defense in Depth and to ensure worker protection are identified in the hazards analysis as required by DOE-STD-3009-94. The DBA analyses, presented in Chapter 3, Section 3.4, are used as the basis for identification of controls required for public protection. No Safety Class controls are required since no accidents challenged the offsite evaluation guidelines.

E.4.1 HAZARDS ANALYSIS

A hazards analysis was performed for the WSB to characterize the level of intrinsic potential hazards associated with the facility in accordance with DOE-STD-3009-94 and the identification of controls required for worker protection. This hazards analysis provided the basis for selecting the set of bounding DBAs discussed in Chapter 3, Section 3.4.

The hazards analysis consists of three basic analytical activities: hazard identification, hazard classification, and hazard evaluation. The hazard analysis includes selection of Safety Significant controls for worker protection. In the process, the common industrial hazards and routinely accepted hazards were identified, and the DOE graded approach excludes them from the formal accident analysis process. The hazard evaluation methodology represents the initial phase of accident analysis and identified the accident scenarios that required consideration. These accidents were categorized as DBAs and Beyond Design Basis Accidents (BDBAs). Natural Phenomena Hazard (NPH) BDBAs include events greater in magnitude than the corresponding facility NPH DBAs. Operational BDBAs are events that result in severe consequences but were not determined to be credible for the facility in the hazard analysis.

E.4.2 ACCIDENT ANALYSIS

Chapter 3, Section 3.4, of this PDSA presents the analyses for WSB accidents. The DBAs consist of operational-related events, natural phenomenon events, and external events. The analysis for each DBA includes scenario development, frequency determination, source term analysis, consequence analysis, comparison to guidelines, and a summary of important-to-safety SSCs, design features, administrative controls, and specific administrative controls.

In addition to DBAs, two BDBAs were evaluated. The first of these was a seismic event greater in magnitude than the design basis criteria of Performance Category 3+ for the facility (as defined in Section 1.4.3.2). This results in significant damage to load bearing and fire walls surrounding the HAW process rooms and the failure of the structural supports for the HAW vessels. Subsequently, small fires start in the facility and are postulated to spread to involve the entire facility. The radiological consequences to the public associated with this BDBA are not significantly larger than the evaluated fire DBA. The second of these was a red oil explosion. In this event, the WSB receives significant quantities of Tributyl Phosphate (TBP) from the MFFF in excess of the amounts specified as the basis for the process design. The resulting energetic reaction has the potential for significant offsite consequences.

The DBAs are credible accidents that may challenge the acceptance criteria for unmitigated scenarios and require controls to mitigate the consequences or prevent the occurrence of the accident. BDBAs are low frequency accidents resulting from the failure of credited controls or NPH events exceeding the design criteria of the facility that have severe consequence potential. BDBAs are intended to present the residual risk of operating the facility. Chapter 3, Section 3.4, of this PDSA presents the analysis for the two classes of accidents. Mitigated consequences are included for the DBAs.

E.4.3 SIGNIFICANT HAZARDS ASSOCIATED WITH WASTE SOLIDIFICATION BUILDING PROCESSES

The most significant hazard associated with the WSB processes will be the HAW operations that will be located in the HAW process room and cementation area. No unmitigated accident scenarios have the potential to challenge the DOE-STD-3009-94 offsite evaluation guideline of 25 rem. Several events involving this material required Safety Significant controls to protect the co-located and the facility workers due to high consequences. Other hazards in the WSB facility will include radionuclide inventory in other areas of the building (e.g., LAW processing area, analytical laboratory, waste handling/staging areas, and chemical storage areas) and standard industrial hazards.

Major DBAs included a fire involving the HAW process room, an explosion in a HAW vessel, and a seismic event. Even though these events result in the release of a significant portion of the WSB inventory, no accidents challenge the offsite evaluation guidelines as defined in DOE-STD-3009-94.

Consequences associated with the major DBAs have been summarized in Table E.1.

Table E.1 Summary of Major Design Basis Accidents

Description	Unmitigated			Mitigated		
	Frequency	Consequence		Frequency	Consequence	
		Offsite	Co-located (100 meters)		Offsite[1]	Co-located (100 meters)
Fire in HAW Process Room	Unlikely	Moderate	High	Unlikely	Negligible	Negligible
HAW Explosion	Unlikely	Low	High	Prevented	N/A	N/A
HAW Vessel/Piping Loss of Confinement	Anticipated	Negligible	Moderate	Anticipated	Negligible	Negligible
Small Aircraft Impact into WSB	Extremely Unlikely	Moderate	High	Extremely Unlikely	Negligible	Moderate
Seismic Event Followed By Explosion	Unlikely	Low	High	Prevented	N/A	N/A
Tornado	Unlikely	Negligible	Low	Unlikely	Negligible	Low

1) All controls are Safety Significant and as such are not credited with reduction of consequence to the MOI. Reduced consequences to the MOI are presented in this table for information only to indicate the consequences that can be expected with these Safety Significant features in place.

E.4.4 MAJOR PREVENTIVE AND MITIGATIVE FEATURES IN THE WASTE SOLIDIFICATION BUILDING CONTROL SET

Controls discussed in this section are pertinent only to the co-located worker assumed to be 100 meters from the event. The WSB Safety Significant SSCs are controls that prevent or mitigate a release of material from the HAW process. The engineered controls and design features necessary to prevent or reduce the consequences of these releases to the co-located worker are summarized in Table E.2. Additional controls, including candidate administrative controls and controls to protect the facility workers, are given in Chapters 3 through 6 of this PDSA and are summarized in Table 3.3-1.

Table E.2 Safety Significant Structures, Systems, and Components Necessary to Protect the Co-located Worker

Control	Safety Function	Type
Fire Suppression System (HAW Area)	Limits the consequences in a fire by mitigating fires in the HAW Area such that a significant release does not occur.	Active Engineered Control
HAW Process Vessel Vent System	Limits the consequences to facility workers from an explosion in the fluidic transfer pump charge vessel by providing filtration of airborne hazardous material. Prevents an explosion from occurring in the HAW vessels and in a drum in a HAW Cementation Enclosure at the mixing station by maintaining the flammable gas concentration below 25% of the Lower Flammability Limit by providing sufficient dilution flow.	Active Engineered Control
HAW Process Room Ventilation	Limits the consequences from the HAW Process Room spills by providing filtration of airborne hazardous material.	Active Engineered Control
HAW Evaporator High Steam Pressure Interlock	Prevents the HAW evaporator steam coil pressure from exceeding 25 pounds per square inch, gauge, which prevents the temperature from exceeding 130º C, the temperature required for rapid decomposition of TBP to occur.	Active Engineered Control
HAW Evaporator High Temperature Interlock	Prevents the HAW evaporator temperature from exceeding 130º C, the temperature required for rapid decomposition of TBP to occur by shutting off steam flow to the evaporator.	Active Engineered Control
HAW Process Piping, Valves, Vessels, Etc.	Limits the consequences from a post-seismic spill by preventing spills during and after a seismic event.	Passive Design Feature
HAW Area	Low Combustible Design (specific to the HAW Process Room) Limits the consequences from fires by preventing fires from propagating into or out of the HAW Area. Limits the consequences from a post-seismic fire by preventing fire propagation into the HAW Area during and after a seismic event.	Passive Design Feature

E.4.5 ANALYSIS APPLICATION

Additional information regarding the Safety Significant SSCs for each potential accident (event) identified in Chapter 3, Section 3.3, is provided in Chapter 4 of this PDSA. These same SSCs and the administrative requirements are also discussed in Chapter 5, “Derivation of Technical Safety Requirements.”

E.5 ORGANIZATIONS

The WSB will be managed and operated by Washington Savannah River Company (WSRC). Within WSRC, the Nuclear Non-proliferation Program is responsible for managing the WSB after project turnover. The facility will be constructed by a subcontractor managed by WSRC.

This PDSA was prepared by Washington Safety Management Solutions with input from WSRC.

E.6 SAFETY ANALYSIS CONCLUSIONS

This PDSA supports the conclusion that the WSB can be operated without undue risk to the public, to site workers, or to the environment. Chapter 3 provides complete hazard and accident analysis results, including event frequency, as well as maximum offsite and onsite radiological and chemical exposure consequences for all postulated accident scenarios.

The WSB has only one unmitigated DBA scenario that exceeds five rem TEDE to the MOI and could therefore be considered "in the rem range" or "challenging" the offsite Evaluation Guideline of 25 rem in DOE-STD-3009-94. The unmitigated accident scenario associated with this event involves the bounding MAR for the HA Process Room of 18.3 kg of Am-241 being involved in a large fire that results in the entire contents of all the HA process vessels being vigorously boiled with subsequent release and exposure to the MOI. The dose consequences calculated for this scenario are 7.3 rem TEDE to the MOI. The controls associated with the mitigation of this event were considered for Safety Class functional classification. Due to the bounding nature of this scenario and the fact that even in this bounding evaluation, it does not challenge the 25 rem Evaluation Guide, Safety Significant controls were determined to be appropriate for this scenario. If a more realistic calculation was performed for this scenario that considered design features, realistic inventories and physical considerations regarding the facility and the materials processed, the actual release and resulting dose would be significantly lower than what is reported for this bounding scenario. Further discussions of this event and the conservatisms in this analysis are presented in section 3.4.2.1.2.4 of this PDSA.

E.7 PRELIMINARY DOCUMENTED SAFETY ANALYSIS ORGANIZATION

The WSB design is in accordance with DOE Order 420.1B requirements and associated criteria as implemented through SRS Standards/Requirements Identification Document. This PDSA reflects the format and scope guidelines presented in DOE-STD-3009-94 relevant to this stage of the design. The form and content of this PDSA apply a graded approach with DOE-STD-3009-94 due to the nature of the PDSA and its early pre-operational development. Specific information is not available or has not been developed enough to support a thorough conventional DOE-STD-3009-94 based document. Detailed process and support operations and maintenance, including instrumentation, monitoring, surveillances, procedures, and training are, in many cases, unknown or are evolving. Detailed information, form, and content are provided to the extent it is available and relevant with design decisions.

E.8 DOE-STD-1189-2008

As preparation of this PDSA neared completion, DOE-STD-1189-2008 was approved and issued. Chapter 18 of this PDSA was added during the review process to address DOE-STD-1189-2008

compliance. In addition, Chapter 3 sections addressing chemical inventories in the WSB were revised to address DOE-STD-1189-2008 criteria. Refer to these chapters for additional information.

WASTE SOLIDIFICATION BUILDING PRELIMINARY DOCUMENTED SAFETY ANALYSIS

CHAPTER 1

SITE CHARACTERISTICS

JULY 2008

UNCLASSIFIED

DOES NOT CONTAIN UNCLASSIFIED CONTROLLED NUCLEAR INFORMATION

DC & Reviewing Official: David Allison
WSMS

Basis: IG-SR-03, 02/04
Date: 5/06/08

SAVANNAH RIVER SITE
Aiken, SC 29808 · www.srs.gov

PREPARED FOR THE U.S. DEPARTMENT OF ENERGY UNDER CONTRACT NO. DE-AC09SR18500

DISCLAIMER

This document was prepared by Washington Safety Management Solutions LLC (WSMS), under contract with Washington Savannah River Company (WSRC), subject to the warranty and other obligations of that contract and in furtherance of WSRC's contract with the United States Department of Energy (DOE).

Release to and Use by Third Parties. As it pertains to releases of this document to third parties, and the use of or reference to this document by such third parties in whole or in part, neither WSMS, WSRC, DOE, nor their respective officers, directors, employees, agents, consultants or personal services contractors (i) make any warranty, expressed or implied, (ii) assume any legal liability or responsibility for the accuracy, completeness, or usefulness, of any information, apparatus, product or process disclosed herein or (iii) represent that use of the same will not infringe privately owned rights. Reference herein to any specific commercial product, process, or service by trademark, name, manufacture or otherwise, does not necessarily constitute or imply endorsement, recommendation, or favoring of the same by WSMS, WSRC, DOE or their respective officers, directors, employees, agents, consultants or personal services contractors. The views and opinions of the authors expressed herein do not necessarily state or reflect those of the United States Government or any agency thereof.

CONTENTS

Page

1.0 SITE CHARACTERISTICS 1.1-1

1.1 INTRODUCTION 1.1-1

1.1.1 Objective 1.1-1

1.1.2 Scope 1.1-1

1.2 REQUIREMENTS 1.2-1

1.3 SITE DESCRIPTION 1.3-1

1.3.1 Geography 1.3-1

1.3.1.1 State and County 1.3-1

1.3.1.2 Location Relative to Prominent Natural and Man-Made Features 1.3-1

1.3.1.3 Boundaries 1.3-2

1.3.1.4 Public Exclusion Area and Access Control Areas 1.3-2

1.3.1.5 Application of Evaluation Guideline 1.3-2

1.3.2 Demography 1.3-3

1.3.2.1 Worker Populations and Nearby Residences 1.3-3

1.3.2.2 Major Population Centers 1.3-3

1.3.2.3 Major Institutions 1.3-4

1.4 ENVIRONMENTAL DESCRIPTION 1.4-1

1.4.1 Meteorology 1.4-1

1.4.2 Hydrology 1.4-1

1.4.2.1 Surface Hydrology 1.4-1

CONTENTS (continued)

Page

1.4.2.2 Subsurface Hydrology 1.4-2

1.4.3 Geology 1.4-2

1.4.3.1 Subsurface Conditions 1.4-2

1.4.3.2 Seismic Ground Response 1.4-3

1.4.3.3 Liquefaction and Dynamic Settlement 1.4-3

1.4.3.4 Static Settlement 1.4-4

1.4.3.5 Bearing Capacity 1.4-4

1.4.3.6 Soft Zones 1.4-4

1.5 NATURAL EVENT ACCIDENT INITIATORS 1.5-1

1.5.1 Earthquakes 1.5-1

1.5.2 Grass/Forest Fire 1.5-2

1.5.3 Intense Precipitation/Natural Deluge 1.5-2

1.5.4 Lightning 1.5-2

1.5.5 Tornadoes 1.5-3

1.6 MAN-MADE EXTERNAL ACCIDENT INITIATORS 1.6-1

1.6.1 Aircraft Crash 1.6-1

1.6.2 Chemical/Toxic Release 1.6-1

1.6.3 External Fire 1.6-2

1.6.4 Loss of Electrical Power 1.6-2

1.6.5 Pipeline Accident 1.6-2

1.6.6 Transportation Accident 1.6-3

CONTENTS (continued)

Page

1.7 NEARBY FACILITIES 1.7-1

1.8 VALIDITY OF EXISTING ENVIRONMENTAL ANALYSES 1.8-1

1.9 REFERENCES 1.9-1

1.10 FIGURES 1.10-1

FIGURES

Page

Figure 1.3-1 Location of WSB with Respect to F-Area and PDCF 1.10-1

ACRONYMS

APC	Atmospheric Pressure Change
CFR	Code of Federal Regulations
DBT	Design Basis Tornado
DOE	U.S. Department of Energy
DSA	Documented Safety Analysis
EG	Evaluation Guideline
F-scale	Fujita Scale
HAW	High Activity Waste
HVAC	Heating, Ventilation, and Air Conditioning
km	kilometer(s)
MOI	Maximally-exposed Offsite Individual
mph	miles per hour
msl	Mean Sea Level
NFPA	National Fire Protection Association
PC	Performance Category
PDCF	Pit Disassembly and Conversion Facility
PGA	Peak Ground Acceleration
psf	pounds per square feet
rem	roentgen equivalent, man
S/RID	Standards/Requirements Identification Document
SPT	Standard Penetration Test
SRS	Savannah River Site
STD	Standard
TRU	Transuranic
WSB	Waste Solidification Building
WSI	Wackenhut Services, Inc.
WSRC	Washington Savannah River Company

1.0 SITE CHARACTERISTICS

1.1 INTRODUCTION

1.1.1 OBJECTIVE

This chapter provides the information necessary to support the Waste Solidification Building (WSB) safety basis requirements given in Title 10 Code of Federal Regulations (CFR), Part 830 (Ref. 1) using the "safe harbor" of U. S. Department of Energy (DOE) Standard (STD)3009-94 (Ref. 2).

1.1.2 SCOPE

This chapter describes site characteristics and facility environs that are important to the safety of WSB. The information in this chapter supports and clarifies the assumptions used in the hazard and accident analyses to identify and analyze potential accident initiators and accident consequences external to the facility. It follows the "safe harbor" guidance of DOE-STD-3009-94 (Ref. 2). This chapter includes the following:

- Description of the WSB location and its proximity to the public and to other areas within the site.
- Identification of the point at which the offsite Evaluation Guideline (EG) is applied.
- Quantification of the surrounding environment characteristics that may influence the design and safe operation of the facility, including the identification of the facility boundary, nearby facilities and airports, railways, water ways, and potential infrastructure related hazards (e.g., natural gas lines).
- Description of the historical basis for site characteristics in meteorology, hydrology, geology, seismology, volcanology, and other natural events to the extent needed for hazard and accident analyses.
- Description of the onsite worker and transient populations relative to the area and facility boundaries.

When pertinent information is provided in other chapters of this Preliminary Documented Safety Analysis (DSA) or in the Savannah River Site (SRS) DSA Support Document (Ref. 3), that source is referenced accordingly to limit repetition.

1.2 REQUIREMENTS

Washington Savannah River Company (WSRC) adheres to documents that specify codes, standards, regulations, and DOE Orders, as well as other site documents that govern program elements addressed in this chapter. These documents are listed in the SRS DSA Support Document (Ref. 3) and the site Standards/Requirements Identification Documents (S/RIDs) (Ref. 4). A programmatic compliance assessment has been performed against the S/RIDs and documented as specified in the WSRC Procedure Manual 8B (Ref. 5). The standards management/compliance section maintains records of the programmatic compliance assessments.

1.3 SITE DESCRIPTION

According to guidance given in DOE-STD-3009-94 (Ref. 2), the purpose of Section 1.3 is to describe "…the site boundary and facility area boundary." The following subsections have been organized according to the subsections given in Reference 2. Unless otherwise indicated, this information has been taken from the SRS DSA Support Document (Ref. 3). For a more detailed description of this information, see the subsections of Reference 3 given in each of the following descriptions.

1.3.1 GEOGRAPHY

According to guidance given in DOE-STD-3009-94 (Ref. 2), the purpose of Subsection 1.3.1 is to provide "…basic geographic information." For a more detailed description of this information, see Chapter 1, Subsection 1.3.1, of Reference 3.

1.3.1.1 State and County

The SRS is a government-owned tract of land occupying 310 square miles (198,344 acres) within Aiken, Barnwell, and Allendale counties in southwestern South Carolina. It was set aside in 1950 as a controlled area for the production of nuclear materials for national defense (Ref. 3). The WSB will be located in F Area at SRS (Figure 1.3-1). This area is located in Aiken County near the center of SRS. The WSB site is located immediately east of the northeast corner of F Area.

1.3.1.2 Location Relative to Prominent Natural and Man-Made Features

The center of SRS is approximately 25 miles (40 kilometers [km]) southeast of the city limits of Augusta, Georgia; 100 miles (160 km) from the Atlantic Coast; and about 110 miles (180 km) south-southeast of the North Carolina border. The SRS is bounded along 17 miles (27 km) of its southwest border by the Savannah River. The SRS DSA Support Document contains a detailed description of SRS (Ref. 3).

The major rivers near SRS include the Savannah, Salkehatchie, and South Fork Edisto Rivers. The Savannah River bounds the site for 17 miles on the southwest side of the site and is a major source of water for SRS operations. Reference 3 includes a more detailed description of water and land use in the vicinity of SRS.

The topography at SRS varies from gently sloping to moderately steep. Reference 3 contains a more detailed description of the topography at SRS and the vicinity. F Area is drained by several tributaries of Upper Three Runs Creek approximately 2,200 feet to the north and west and by Four Mile Branch approximately 2,000 feet to the south. Surface elevations across F Area range approximately from 200 to 320 feet above mean sea level (msl).

The main processing facilities in F Area were F-Canyon and FB-Line. F-Canyon and FB-Line are currently deactivated with the exception of a transuranic (TRU) waste drum repackaging operation inside the F-Canyon. The F-Area analytical laboratories support F-Area and H-Area reprocessing and waste treatment and storage activities. The F-Area Waste Tank Farm consists of 22 large underground storage tanks and an evaporator that store and treat high-level aqueous radioactive waste and evaporated saltcake.

1.3.1.3 Boundaries

Figure 1.3-1 indicates the general location of the WSB. The perimeter of SRS is marked by a fence line. The nearest site boundary to F Area is the Savannah River, which is approximately 5.8 miles (9.4 km) to the west (Ref. 6). Reference 3 includes a more detailed description of other facilities at the SRS.

1.3.1.4 Public Exclusion Area and Access Control Areas

The outer perimeter of SRS is fenced; access is controlled by the operating contractor with the assistance of the security contractor, Wackenhut Services, Inc. (WSI), to restrict access by the public as needed. The roads that pass through or near the perimeter can be blocked by WSI personnel or with the assistance of local law enforcement personnel. Traffic on South Carolina Highway 125 can be restricted rapidly. General access to the plant site, with the exception of public transportation corridors, is limited to badged personnel. Access to the WSB will be restricted to employees who have the appropriate designation on their security badges.

1.3.1.5 Application of Evaluation Guideline

The outer perimeter fence line of SRS is used as the basis for technical specification limits for releases from SRS facilities. The outer perimeter is fenced and access is controlled by the security contractor (WSI) so that access by the public can be restricted as the need arises. The roads that pass through or near the perimeter can be blocked by WSI personnel or with the assistance of local law enforcement personnel. Reference 3 includes additional details on boundaries for establishing effluent release limits.

An offsite EG of 25 roentgen equivalent, man (rem) total effective dose is established in Appendix A of DOE-STD-3009-94 (Ref. 2) to evaluate the need to credit Safety Class controls for protecting the public during and following postulated accidents. The nearest site boundary to F Area is approximately 5.8 miles (9.4 km) to the west (Ref. 6) and is used to determine doses for the Maximally-exposed Offsite Individual (MOI) for comparison to the offsite EG (all plume releases for postulated accidents determined to be at ground level at this point). DOE Order 420.1B (Ref. 7) states "because of uncertainties in analysis and design parameters before final design, the 25 rem value should not be regarded as a 'bright line.' If unmitigated dose results are in the rem range, then serious consideration should be given to identifying related safety SSCs as safety class."

The SRS is a self-contained site that provides its own security, fire, protection, medical, maintenance, and other services (Ref. 3). To enhance the safety of the facility, a large support staff provides services such as radiological protection, industrial hygiene, and safety. The Environmental Services Section maintains an active permit inventory for National Pollutant Discharge Elimination System permitted outfalls and Clean Air Act permitted air emission sources. Reference 3 includes a description of the SRS Effluent Monitoring Program.

The WSB waste management plan identifies all forms of waste leaving the facility that result from construction, operation, and decommissioning and provides a disposition pathway for the waste (Ref. 8). The scope of this plan also includes construction wastes, air pollutant emissions, stormwater, decommissioning activities, as well as solid forms of TRU waste, liquid and solid forms of low-level waste, hazardous waste, and nonhazardous waste. A summary of the WSB waste effluents can be found in Chapter 9 of this document.

1.3.2 DEMOGRAPHY

According to guidance given in DOE-STD-3009-94 (Ref. 2), the purpose of Subsection 1.3.2 is to provide population information "…to show the population distribution as a function of distance and direction from the facility." For a more detailed description of the population within 50 miles (80 km) of the WSB, see Chapter 1, Subsection 1.3.2, of Reference 3.

1.3.2.1 Worker Populations and Nearby Residences

The population and distribution within a 50-mile radius of the SRS center is approximately 730,000. Reference 3 includes a more detailed description of this population. The permanent population consists of residents within a 50-mile radius of F Area. Projected permanent populations and their distribution within a 50-mile radius of F Area were estimated for ten-year intervals through 2040 based on the 1990 census data by the Savannah River National Laboratory and are included in Reference 3.

The areas within a five-mile radius are DOE-owned properties within SRS. The population for this area consists of SRS workers only. The industrial population within a five-mile radius of F Area consists entirely of SRS employees at A, B, C, E, F, H, K, M, N, S, and Z Areas. Reference 3 includes a list of the approximate current work force presented by area.

1.3.2.2 Major Population Centers

The center of SRS is approximately 25 miles (40 km) southeast of the city limits of Augusta, Georgia; 100 miles (160 km) from the Atlantic Coast; and about 110 miles (180 km) south-southeast of the North Carolina border. Reference 3 includes information on smaller population centers in the vicinity of SRS.

1.3.2.3 Major Institutions

The existing public school population within five miles of the site boundary consists of students and school personnel associated with 11 public schools located in New Ellenton, Jackson, Williston, and Barnwell, South Carolina. There are no public schools within five miles of F Area and H Area (Ref. 3). Reference 3 includes a more detailed description of transient populations in the vicinity of SRS including recreational land usage, health care population, and population that travels through the site on personal business.

1.4 ENVIRONMENTAL DESCRIPTION

According to guidance given in DOE-STD-3009-94 (Ref. 2), the purpose of Section 1.4 is to describe "…the site's meteorology, hydrology, and geology." The following subsections have been organized according to the subsections given in Reference 2. Unless otherwise indicated, this information has been taken from the SRS DSA Support Document (Ref. 3). For a more detailed description of this information, see the subsections of Reference 3 given in each of the following descriptions.

1.4.1 METEOROLOGY

Chapter 1, Subsection 1.4.1, of Reference 3 includes descriptions of the SRS regional climatology and local meteorology. The meteorological measurement program for SRS is described in Subsection 1.4.1.3 of the DSA Support Document (Ref. 3). For characterizing the WSB dispersion climatology, data from F Area are considered representative.

1.4.2 HYDROLOGY

According to guidance given in DOE-STD-3009-94 (Ref. 2), the purpose of Subsection 1.4.2 is to provide the hydrological information necessary to understand "…regional hydrological phenomena of concern for facility operation and to understand any dispersion analyses performed." The following information has been taken from the SRS DSA Support Document (Ref. 3). For a more detailed description of the hydrology in the vicinity of the WSB, see Chapter 1, Subsection 1.4.2, of Reference 3.

1.4.2.1 Surface Hydrology

Much of SRS is located on the Aiken Plateau. The plateau slopes to the southeast approximately 5 feet per mile and is dissected by streams that drain into the Savannah River. The major tributaries that occur on SRS are Upper Three Runs Creek, Four Mile Branch, Pen Branch, Steel Creek, and Lower Three Runs Creek. A detailed hydrologic description of the Savannah River and its tributaries is provided in the SRS DSA Support Document (Ref. 3). A topographic map showing surface drainage of F Area is shown in the SRS DSA Support Document (Ref. 3). Surface water is not used for any WSB operations.

The WSB site in F Area is about 1 mile south of the 100-year floodplain of the Upper Three Runs Creek, but there is no information concerning the 500-year floodplain (Ref. 9, Section 3.5.7.1.1). The mean annual flow for the Upper Three Runs Creek is 215 cubic feet per second. Stormwater runoff is into the National Pollutant Discharge Elimination System outfalls, which discharge into the Upper Three Runs Creek.

1.4.2.2 Subsurface Hydrology

The water levels, pH, and specific conductance recorded for monitoring wells in F Area are reported quarterly in a groundwater monitoring program report issued by the Environmental Services Section. Monitoring well data for F Area are reported in an environmental monitoring report for each calendar year. Updated well information, including well locations, is given in the Environmental Services Section's well inventory report. General information on F-Area water usage, water gradients, permeability, porosity and flow rates, water chemistry, and potential groundwater recharge areas can be found in the SRS DSA Support Document (Ref. 3).

Groundwater depths typically are 60 to 80 feet below the ground surface, well below any construction excavations. It is expected that the only subsurface water to be encountered in construction excavations will be in the form of perched or trapped "pockets" of water over local fine-grained soil layers or in soil that has been relocated during SRS construction activities. Such trapped or perched water has a limited volume and, once drained, should not reoccur during construction except possibly during rainy weather. Detailed information relevant to the WSB is provided in the WSB Geotechnical Report (Ref. 10).

1.4.3 GEOLOGY

A geotechnical investigation was performed for the site of the future WSB (Ref. 10). The study consisted of reviewing previous geotechnical and geologic data and reports and performing subsurface field explorations, field testing, and engineering analyses. The purpose of this investigation was to characterize the soil. The objectives were to establish the site-specific geological conditions; obtain representative engineering properties of the subsurface materials under seismic and structural loads; and evaluate the effect of soft zones, liquefaction potential, bearing capacity, and potential settlements of subsurface materials.

The subsurface conditions were characterized based on a series of investigations that included standard penetration test (SPT) borings, seismic piezocone penetration test soundings, laboratory testing, and evaluation of data from previous studies at SRS. The results of these evaluations, together with geotechnical engineering analyses, are summarized as follows.

1.4.3.1 Subsurface Conditions

Subsurface conditions in natural soil at the WSB site are consistent with the Pit Disassembly and Conversion Facility (PDCF) project site and are similar to other parts of F Area (Ref. 10). Shallow engineering stratigraphy at the WSB site is the same as PDCF and correlates closely with the stratigraphy defined for the rest of F Area. Average engineering soil properties for these stratigraphic layers are also similar. Section 3.0 of the WSB Geotechnical Report (Ref. 10) discusses the subsurface conditions at the WSB site.

"Soft zones" are determined by one of two criteria: (1) corrected cone penetration test tip resistances that are less than 15 tons per square foot, or (2) SPT resistances that are less than or equal to five blows per foot, over a 2-foot-thick (or greater) interval. These zones were commonly encountered in explorations in F Area, and such soft zones were also encountered in

the exploration of the WSB site and are discussed in Section 3.2 of the WSB Geotechnical Report (Ref. 10).

Uncontrolled fill has been placed across the WSB site during the construction of F Area in 1950 and 1951. The thickness of the fill is indeterminate, but it is expected that 2 feet to 6 feet of existing soil may have to be removed and replaced with controlled fill (Ref. 10).

1.4.3.2 Seismic Ground Response

Time histories for the SRS bedrock response spectrum (Ref. 11) consist of a probabilistic (Performance Category [PC] 3) time history for an annual probability of exceedance of 5×10^{-4} per year and a deterministic time history to represent the 1886 Charleston earthquake. However, consistent with PDCF, the WSB used a factored PC-3 time history (PC-3 times 1.25), also known as PC-3+. The WSB will be constructed within the PDCF site; therefore, the WSB soil response analysis to compute earthquake-induced cyclic shear stresses for liquefaction analysis is the same as the PDCF soil response analysis and is described in Section 4.1.1 of the PDCF Geotechnical Report (Ref. 12) and Section 5.2 of the WSB Geotechnical Report (Ref. 10).

1.4.3.3 Liquefaction and Dynamic Settlement

Liquefaction reduces the strength and stiffness of the soil by earthquake shaking or other cyclic loading. The liquefaction potential of the PDCF site soil was evaluated probabilistically by a detailed study (Ref. 13). That study concluded that the probability of liquefaction for the PDCF site, which contains the WSB, is about 1.4×10^{-5}.

Other studies of facilities in F Area (Ref. 14) concluded that "liquefaction in F-Area, for the ground motion analyzed, is highly unlikely." In addition, a liquefaction and dynamic settlement analysis was carried out for the WSB structure. The analysis concluded that the WSB structure has a safety factors against liquefaction generally well above 1.15 for earthquake magnitudes less than 7.5 (Ref. 10).

Dynamic settlement may occur even if liquefaction is not triggered. It can occur in one of the following ways: 1) dynamic settlement due to partial liquefaction, or 2) settlement of an underconsolidated soft layer or "soft zone." Dynamic settlements due to these two components were analyzed for the WSB (Ref. 10).

Reference 10 states that dynamic settlement due to the generation of excess pore pressure or "partial liquefaction" is expected to be in the range of ¼ to 1¼ inch. However, these settlements are not expected to contribute to differential settlement.

The maximum thickness of a soft zone found beneath the WSB is approximately 4.7 feet (at about 129 feet below the WSB foundation), much smaller than the maximum found under the PDCF processing building of 7.6 feet. For the WSB analysis, a conservative soft zone thickness of 7.6 feet (the maximum value found beneath the plutonium processing building [Ref. 12]) was utilized. At ground surface this postulated soft zone collapse resulted in 2¾ inches of differential settlement (Ref. 10, 12).

1.4.3.4 Static Settlement

Based on Reference 10 and the expected load of 3,000 pounds per square foot (psf), the expected initial static settlement is ½ to 2¼ inches, with a differential settlement of about 1 inch. An additional ¼ inch of long-term creep is expected; however, long-term creep is not expected to contribute to the differential settlement.

1.4.3.5 Bearing Capacity

Based on Reference 10, the site soils provide adequate strength for shallow foundations (footings and mats). For a mat foundation, the allowable bearing capacity is about 6,000 psf. It is expected, however, that the actual loads will be less.

1.4.3.6 Soft Zones

At SRS, soft zones are typically between 100 to 250 feet below the ground surface. They are marine influenced sediments deposited during the Middle Eocene epoch (35 to 57 million years ago). These weak zones, which vary in thickness and lateral extent, have been termed “soft zones” and occur within the Santee/Tinker Formation (Ref. 10). No static settlement is expected to occur due to soft zones. However, dynamic settlement due to soft zones has been analyzed as discussed in Section 1.4.3.3.

1.5 NATURAL EVENT ACCIDENT INITIATORS

This section identifies and describes natural phenomena events considered to be potential accident initiators at specific SRS facilities. The following subsections have been organized according to the subsections given in Reference 2. Unless otherwise indicated, this information has been taken from the SRS DSA Support Document (Ref. 3). For a more detailed description of this information, the reader can refer to the subsections of Reference 3 given in each of the following descriptions.

1.5.1 EARTHQUAKES

While SRS is not located in a highly active seismic area, it can experience significant seismic events but at lower expected frequency levels. Peak Ground Accelerations (PGAs) and design response spectra for various probabilistic return periods of the seismic event have been developed for the SRS. Based on previous studies at SRS and elsewhere, there are no known capable or active faults within the 200-mile radius of the site and elsewhere that influence the seismicity of the region, with the exception of blind, poorly constrained faults associated with the Charleston seismic zone (Ref. 3, Section 1.4.3.2).

Two major earthquakes have occurred within 200 miles of SRS. The Charleston, South Carolina, earthquake of August 31, 1886, had an estimated moment magnitude of 7.3. It occurred approximately 90 miles from the SRS, which experienced an estimated peak horizontal acceleration of 10 percent of gravity (0.10g). The Union County, South Carolina, earthquake of 1913 had an estimated moment magnitude of 4.5 and occurred about 99 miles from SRS. Because these earthquakes are not associated conclusively with a specific fault, researchers cannot determine the amount of displacement resulting from them. In recent years, three earthquakes occurred inside the SRS boundary. The most recent earthquake was on May 17, 1997, with a duration magnitude of 2.5 and focal depth of approximately 5.4 miles. Its epicenter was west of K Area. The second earthquake was on August 5, 1988, with a duration magnitude of 2.0 and a focal depth of 1.66 miles. Its epicenter was northeast of K Area. The third earthquake was on June 9, 1985, with a duration magnitude of 2.6 and a focal depth of 0.59 miles. Its epicenter was northwest of K Area. Outside the SRS boundary, an earthquake with a duration magnitude of 3.2 occurred on August 8, 1993, approximately 10 miles east of the City of Aiken near Couchton, South Carolina. People reported feeling this earthquake in Aiken, New Ellenton (north of SRS), North Augusta (25 miles northwest of SRS), and on the site. Therefore, earthquakes pose a potential threat at SRS as accident-initiating events and require evaluation.

The SRS Design Basis Earthquake for a PC-3 facility has a PGA of 0.16g, with a mean annual exceedance probability of $5x10^{-4}$ (Ref. 11). Based on technical direction from National Nuclear Security Administration, the facility seismic design has been increased to a PGA value of 0.20g to be consistent with the seismic design criteria (referred to as PC-3+ in this document) for the Mixed Oxide Fuel Fabrication Facility and PDCF (Ref. 15, 16, 17).

Seismic response data applicable to WSB has been provided in Reference 3.

1.5.2 GRASS/FOREST FIRE

SRS is located in an area that is primarily forest and agricultural; therefore, forest fires are a concern. Grass fires can also occur at the WSB site. In 53 years (1954-2007), SRS has not experienced a major wildland fire event that affected a nuclear facility. Two studies have been performed to determine the frequency at which a wildland fire would approach an area at SRS. The results from these calculations are 0.002 per year (Ref. 18) and 0.0021 per year (Ref. 19).

1.5.3 INTENSE PRECIPITATION/NATURAL DELUGE

One natural event that is of concern in the SRS area is precipitation/storm runoff from a sudden deluge or prolonged heavy rainfall. Hourly observations at Augusta indicate that rainfall rates are usually less than 0.5 inch per hour, although rainfall rates of up to 2 inches per hour can occur during summer thunderstorms (Ref. 3, Section 1.4.1.2). Unusually intense local rainfalls occurred at SRS in 1990 on July 25, August 22, October 10-12, and October 22-23. A report of these unusual rainfalls concluded that although over 6 inches of rain fell in a 10 square mile area during the August 22 storm, this amount is just 20 percent of the 6-hour probable maximum precipitation of 31 inches. The maximum intensity for this rainfall would be 15.1 inches over 1 hour. The peak stage corresponding to the probable maximum precipitation is 224.5 feet above msl or 75 feet below the F-Canyon site grade (Ref. 3, Section 1.5.1.3).

Stormwater at SRS drains to surface water streams, rivers, and ponds, several of which are located onsite and several just offsite. The WSB site in F Area is about 1 mile south of the 100-year floodplain of the Upper Three Runs Creek, but there is no information concerning the 500-year floodplain (Ref. 9, Section 3.5.7.1.1). The average flow for the Upper Three Runs Creek is 215 cubic feet per second (Ref. 3, Section 1.4.2.1). Stormwater runoff would be into National Pollutant Discharge Elimination System outfalls, which discharge into the Upper Three Runs Creek.

A method based on precipitation, basin runoff, and open channel hydraulics was developed to determine the probabilistic flood hazard curve for F Area. The calculated water elevation for a 100,000-year return flood at F Area due to runoff from the Upper Three Runs Creek basin is 145 feet above msl. The elevation of F Area is greater than 260 feet above msl. Therefore, the chances of flooding at F Area from runoff from the Upper Three Runs are significantly less than 1×10^{-5} per year (Ref. 20). Based on the topography of the surrounding area, flooding from Upper Three Runs Creek is not expected.

1.5.4 LIGHTNING

Lightning is a viable external event at SRS. Based on the most recent available information, an average of about 54 thunderstorm days per year was observed in the SRS area during the period between 1951 and 1995. Fifty percent of the annual average total occurred in June, July, and August. The estimated average number of lightning strikes per thunderstorm day is given by the following:

$$\text{Number of flashes/km}^2 = [0.1 + 0.35 \sin(\text{latitude})] * A$$

The latitude of SRS is 33°16' and A is 0.4 +/- 0.2

Assuming the most conservative value for A of 0.6, on the annual average, lightning flashes will strike 10 times per year on a square-kilometer area. Measurements of cloud-to-ground lightning strikes recorded from the National Lightning Detection Network over the 5-year period of 1989 to 1993 show an average of four strikes per square kilometer per year in the SRS area (Ref. 3, Section 1.4.1.1). The WSB will be equipped with a lightning protection system in accordance with the National Fire Protection Association (NFPA) 780 (Ref. 21).

An unmitigated lightning strike at the WSB could affect the availability of multiple electrical systems, but would be subsumed by a loss-of-power event. There is also a possibility of multiple shorts within the electrical systems and the possibility of initiating one or more fires.

1.5.5 TORNADOES

The SRS has historically been an area of moderate tornado activity. A total of 165 tornadoes occurring within a 2-degree square latitude and longitude centered on SRS over a 30-year period from 1967 have been identified (Ref. 3, Section 1.4.1.1). About half of the total number of observed tornadoes occurred in the months of March, April, May, and November. However, tornadoes have been observed in the SRS region every month of the year. Based on these data and the average area affected by a tornado, the average frequency of a tornado striking any given location in South Carolina is $2x10^{-4}$ per year (Ref. 22). This results in a "point-strike recurrence" interval of about once every 5,000 years.

Until recently, tornadoes at SRS have been classified using of the Fujita scale (F-scale), which typically estimates wind speed indirectly based on the resultant damage at the high end (F4 to F5) of the scale. Although the Fujita scale has been replaced by the Enhanced Fujita scale, no effort has been made to revise the classifications of tornadoes at SRS. Therefore, the information given in this document is based on the original Fujita scale.

Between 1953 and 2000, nine confirmed tornadoes occurred on or near SRS. Nothing more than light damage occurred, with one exception: an F2 tornado on October 1, 1989, that caused considerable damage to forest resources in an undeveloped southeastern sector of SRS. The tornado knocked down several thousand trees over a 16-mile path across the southern and eastern portions of the site. Wind speeds produced by this tornado were estimated to be as high as 150 miles per hour (mph). Four F2 tornadoes struck forested areas of SRS on three separate days during March 1991. Considerable damage to trees was observed in the affected area. The other four confirmed tornadoes were classified as F1 and produced relatively minor damage. None of the tornadoes at SRS have damaged buildings (Ref. 3, Section 1.4.1.1). In the past, tornado calculations have been performed for various facilities at SRS. The magnitude of the tornado used in the majority of these calculations was the 137-mph Design Basis Tornado (DBT) for a PC-3 facility as described in DOE-STD-1020 (Ref. 23).

Damage from tornadoes is generally caused by high winds, tornado-borne missiles, or Atmospheric Pressure Changes (APCs). The DBT for SRS has a maximum wind speed of 137 mph at a 10-meter height (Ref. 23). SRS site-specific Natural Phenomena Hazard criteria for PC-

3 tornadoes are a 3-second wind of 180 mph with an annual exceedance probability of $2x10^{-5}$ (Ref. 24, Table 7.1.1). The structure must be designed for APC of 70 psf at 31 psf/second (Ref. 24, Table 7.1.1). Three types of missiles are used to analyze potential effects on moderate-hazard facilities. The first is a 15-pound, 2-inch by 4-inch plank at 100 mph (horizontal) with a maximum height of 150 feet and 70 mph (vertical). The second is a 75-pound, 3-inch-diameter steel pipe at 50 mph (horizontal) with a maximum height 75 feet and 35 mph (vertical). The third is a 3,000 pound automobile rolling and tumbling at 19 mph (Ref. 24, Table 7.1.1).

1.6 MAN-MADE EXTERNAL ACCIDENT INITIATORS

This section provides identification of specific external man-made phenomena considered to be potential accident initiators at the site, exclusive of sabotage and terrorism. The following subsections have been organized according to the subsections given in Reference 2. Unless otherwise indicated, this information has been taken from the SRS DSA Support Document (Ref. 3). For a more detailed description of this information, see the subsections of Reference 3 given in each of the following descriptions.

1.6.1 AIRCRAFT CRASH

Bush Field in Augusta, Georgia, and the Columbia Municipal Airport in Lexington County, South Carolina are the only two airports within 65 miles of SRS that provide scheduled air passenger services. Barnwell County airport, a small, general aviation facility, is the closest airport to the SRS boundary. Private aircraft, including corporate jets, use Barnwell County airport, which is located on U.S. Route 278, 1 mile west of Barnwell. The Aiken Municipal Airport is another small, general aviation facility approximately thirty miles north of K-Area.

During the history of SRS operations, one single-engine plane emergency landed on an onsite highway. This landing occurred during a period of low-density traffic, and the pilot avoided highway vehicles. An amphibian plane landed on Par Pond when the pilot mistook it for Thurmond Lake (formerly Clarks Hill Reservoir) (Ref. 3, Section 1.6.1.3). A security patrol helicopter has crashed at SRS, and a survey helicopter was forced to make an emergency landing when its engine malfunctioned.

Directly above the SRS boundary, the SRS is subject to the requirements found in 10 CFR 19 (Ref. 25), which apply to government and commercial nuclear installations. The requirement is that rotary aircraft (helicopters) must stay above 500 feet and fixed wing aircraft must stay above 1,000 feet.

A frequency evaluation (Ref. 26) for aircraft collisions resulting in a radioactive material release from the WSB High Activity Waste (HAW) processing rooms resulted in a calculated frequency of 8.4×10^{-7} per year which is considered to be "Beyond Extremely Unlikely." This evaluation was performed according to the stepwise process given in DOE-STD-3014-96 (Ref. 27). The evaluation considered a direct impact of the aircraft with the HAW processing rooms and an aircraft collision that impacts another section of WSB causing a fire that propagates into the HAW Processing Rooms.

1.6.2 CHEMICAL/TOXIC RELEASE

Offsite chemical/toxic gas releases are enveloped by the transportation external event or the industrial accident event. Therefore, only onsite chemical releases are considered under this external event.

Hazardous materials can be divided into three basic categories: high explosives, chemical hazardous materials, and radiological hazardous materials. SRS does not process high explosive material at the site. Chemical hazardous materials are stored at SRS. The screening methodology for chemical hazards is based on the list of extremely hazardous substances found in 40 CFR 355, Appendix A (Ref. 28).

Chemicals that will be stored in the WSB are sodium hydroxide, nitric acid, and solids used to form the grout waste forms (e.g., concrete, admixtures, and density modifiers). The amounts of these chemicals present at WSB will not exceed any evaluation guide limit for a release. Chapter 3 of this document provides more details on chemical release accidents.

1.6.3 EXTERNAL FIRE

External fires may originate from other facility operations and spread to the WSB. External fire threats include neighboring structures or transport vehicles. In the past at SRS, structure exposure fires and some vehicle fire scenarios have been explicitly included in fire frequency calculations. For scenarios that evaluate single-facility events, the consequences do not exceed those calculated for internal fire events. The screening criteria for assessing a building's susceptibility to fire exposure is a separation of less than three times the spacing required by NFPA 80A (without crediting fire walls or sprinklers) (Ref. 29). In addition, NFPA 80A recommends that the required separation be increased if no fire department response is expected. Based on this criterion and the bounding scenarios analyzed for internal fire events, all nuclear facilities at SRS were eliminated from further consideration (Ref. 18). However, these controls are necessary to ensure negligible consequences to the WSB. Therefore, external fire events could not be screened out and are evaluated in the hazard analysis.

1.6.4 LOSS OF ELECTRICAL POWER

Loss of electrical power has occurred for different facilities at SRS. As a result of a loss of electrical power, safe shutdown hazards may result. For example, Heating, Ventilation, and Air Conditioning (HVAC) ventilation flow or process vessel ventilation flow may be lost. With a loss of ventilation flow, the negative pressure boundary between vessels, gloveboxes, and the different zones, as well as vapor space purges, could be lost. Consequently, there is the potential for radioactive material releases from process gloveboxes to the environment. To prevent a release of radioactive material due to a loss of electrical power, a backup electrical power supply (e.g., a diesel generator) will be provided.

1.6.5 PIPELINE ACCIDENT

Pressurized pipelines are considered standard industrial hazards and are evaluated as potential accident initiators in Chapter 3, as appropriate. Pressurized pipelines for consideration include the following:

- Pressurized fire suppression system lines

- Pneumatic lines
- Domestic water lines
- Steam supply lines
- Pressurized process lines

The working range pressure of the pressurized fire suppression system lines is usually from 110 to 165 pounds per square inch, gauge, and runs primarily underground in F Area. In addition to the pressurized fire suppression system, a wet-pipe sprinkler system runs throughout the WSB. Rupture of either system could result in a mechanical insult to material.

No natural gas lines are present in the area of the WSB.

1.6.6 TRANSPORTATION ACCIDENT

The site is not open to the general public, but specific access is permitted for guided tours, controlled deer hunts, and environmental studies. In addition, the public can traverse portions of the site along established transportation corridors. These include a rail line for CSX Transportation Incorporated Railroad and public highways (Ref. 3, Section 1.3.1.2). Two major public highways traverse SRS: SCR 125 and U.S. Route 278. Both highways are patrolled and maintained by the State of South Carolina.

Many different vehicles and transport packaging are used to transport hazardous materials at SRS. Materials transported by truck at SRS include radioactive materials in the form of powders, bulk liquids, samples, solid monoliths, fabricated components, gases, solid wastes, and contaminated equipment. Nonradioactive hazardous material forms that are transported include bulk liquids, granular solids, liquefied gases, laboratory reagents, and janitorial supplies (Ref. 3, Section 1.6.1.1).

The onsite rail system is interfaced with commercial railroads at the Dunbarton Station near the Railroad Classification Yard and at Ellenton near the 400-D Area. Cargo, such as tank cars of bulk chemicals, helium, and various other goods, are moved from the interchanges to other areas on the site. Trains hauling spent fuel casks or equipment contaminated with radioactive materials are operated at speeds of less than 25 mph and are slowed to less than 15 mph at railroad-highway crossings that all have signals and cross bars. Due to shipping container specifications and administrative procedures, it is unlikely that a transportation accident would have a significant effect except near the accident (Ref. 3, Section 1.6.1.2).

Essentially no commercial waterborne transportation takes place on the Savannah River between Augusta and Savannah, Georgia (Ref. 3, Section 1.6.1). The most severe onsite transportation accident is a railroad accident occurring on the railroad that crosses the site or a tanker or propane truck exploding during filling operations in F Area. A detailed hazard analysis of accident consequences and risks resulting from hazardous material transportation at SRS has been performed (Ref. 30).

1.7 NEARBY FACILITIES

This section identifies any nearby facilities that could be affected by accidents within the WSB. Major offsite facilities are identified in the DSA Support Document, along with any hazardous operations they may have which could adversely impact onsite facilities.

Land near the WSB lies completely within SRS and is used for industrial purposes associated with SRS and as forestland. Forested areas are managed by the Savannah River Forest Station, an administrative unit of the United States Forest Service. Through an interagency agreement between DOE and the U.S. Department of Agriculture, the United States Forest Service maintains the Savannah River Forest Station to provide timber management, research support, soil and water protection, wildlife management, secondary road management, and fire management.

F Area is centrally located within the SRS boundary. It is located in Aiken County, South Carolina, near the center of SRS, east of Road C and north of Road E (Ref. 3). The F-Area center point coordinates are given in the DSA Support Document (Ref. 3). The nearest site boundary to F Area is approximately 5.8 miles (9.4 km) to the west.

F Area's main processing facility was F Canyon, which consisted of two chemical separation plants, F Canyon and FB-Line, and the associated waste storage facilities. In the past, F Canyon was used to chemically separate uranium, plutonium, and fission products from irradiated fuel and target assemblies. In the FB-Line process, the plutonium-bearing solution from F Canyon was converted to plutonium-239 metal. F Canyon and FB-Line are currently deactivated with the exception of a TRU waste drum repackaging operation inside the F Canyon.

The separated uranium and plutonium were transferred to other facilities for further processing and final use. The waste was transferred to high-level waste tanks in the area for storage. The F-Area waste tank farm consists of 22 underground storage tanks that store aqueous high-level radioactive waste and evaporated saltcake. Two of these underground storage tanks that have been used to store aqueous high-level waste have been closed and filled with grout.

Numerous support facilities are located in F Area between F Canyon and the location in which the WSB will be built. These include the Electronics and Instrumentation Shop (Building 284-10F) and Building 235-F. Building 235-F has been used for several plutonium and uranium metal working and finishing missions since the facility was built in the early 1950s but has been put into a standby condition until the building and its support facilities are decontaminated and decommissioned. Until recently, the Building 284-F powerhouse was also located in this area. This facility has since been demolished.

The WSB will be one of three facilities built outside of the northeast corner of the F-Area fence line. The Mixed Oxide Fuel Fabrication Facility will be north of the fence line and the PDCF will be east. WSB and its support facilities (e.g., waste storage pad, diesel generators, and electrical substations) will be entirely within the PDCF boundaries as shown in Figure 1.3-1. Because the WSB operations are closely tied to the operations of these facilities and because

they are in the same vicinity, an accident event in one facility could significantly affect operations in the other two.

1.8 VALIDITY OF EXISTING ENVIRONMENTAL ANALYSES

The DSA Support Document (Ref. 3) describes site characteristics and facility environs that are important to safety basis assumptions. Chapter 1, Section 1.8, of the DSA Support Document (Ref. 3) describes the relationship between existing environmental analyses and the safety basis documents for individual facilities.

The Nuclear Regulatory Commission prepared an Environmental Impact Statement that evaluates the potential environmental impact of the construction and operation of Mixed Oxide Fuel Fabrication Facility, the PDCF, and the WSB (Ref. 31).

DOE is revising the Environmental Impact Statement for surplus plutonium disposition (Ref. 9). This will include information on the environmental impacts expected by the WSB.

1.9 REFERENCES

1. "Nuclear Safety Management," Energy. Title 10, Code of Federal Regulations,Part 830, Subpart B, Safety Basis Requirements, U.S. Department of Energy, Washington, DC.

2. Preparation Guide for U.S. Department of Energy, Nonreactor Nuclear Facility Safety Analysis Reports. DOE-STD-3009-94, Change Notice 3, U.S. Department of Energy, Washington, DC, March 2006.

3. Savannah River Site DSA Support Document – Site Characteristics and Program Descriptions. WSRC-IM-2004-00008, Rev. 1, Washington Savannah River Company, Aiken, SC, June 2007.

4. Standards/Requirements Identification Document. Washington Savannah River Company, Aiken, SC.

5. Compliance Assurance Manual. WSRC Procedure Manual 8B, Washington Savannah River Company, Aiken, SC.

6. MACCS Input Data Guidance For SRS Applications. WSRC-RP-98-00978, Washington Savannah River Company, Aiken, SC, October 1998.

7. Facility Safety. DOE Order 420.1B, U.S. Department of Energy, Washington, DC, December 2007.

8. Waste Solidification Building Waste Management Plan. WSRC-RP-2003-00524, Washington Savannah River Company, Aiken, SC.

9. Surplus Plutonium Disposition Final Environmental Impact Statement. DOE/EIS-0283, U.S. Department of Energy, Washington, DC, November 1999.

10. Waste Solidification Building Geotechnical Report. K-ESR-F-00012, Rev. 1, Washington Savannah River Company, Aiken, SC, August 2007.

11. SRS Seismic Response Analysis and Design Basis Guidelines. WSRC-TR-97-0085, Rev. 0, Washington Savannah River Company, Aiken, SC, March 31, 1997.

12. Cooke, M.F. PDCF Geotechnical Report. LAW Engineering and Environmental Services, Inc., C-ESR-F-00014, July 2003.

13. Lee, R.C., McHood, M.D., and Lewis, M.R. Probability of Liquefaction for Pit Disassembly and Conversion Facility (PDCF) Site. WSRC-TR-2001-00406, Rev. 0, Washington Savannah River Company, Aiken, SC, August 27, 2001.

14. F-Area Geotechnical Characterization Report. WSRC-TR-96-0069, Rev. 0, Washington Savannah River Company, Aiken, SC, September 1996.

15. Mukunda, R. Seismic Design Criteria for the Pit Disassembly and Conversion Facility. (DOE Technical Manager PDCF) to Lou Sas (Project Manger WGI), U.S. Department of Energy, Washington, DC, April 12, 2001.

16. Tripathi, B. Design Basis Earthquake (DBE) for the Proposed PDCF at DOE/SRS. Draft, Science Applications International Corporation, Germantown, MD, February 5, 2001.

17. Mukunda, R. Seismic Design Criteria for the Pit Disassembly and Conversion Facility (PDCF). (DOE Technical Manager PDCF) to Richard Raaz (Project Manager WGI), U.S. Department of Energy, Washington, DC, January 23, 2002.

18. Wildland Fire Risk at SRS. WSMS-SAE-00-00352, Washington Safety Management Solutions LLC, Aiken, SC, October 13, 2000.

19. Coutts, A. The Wildland Fire Frequency for the Savannah River Site. WSRC-TR-2001-00367, Washington Savannah River Company, Aiken, SC, September 28, 2001.

20. Flood Hazard Assessment for the Savannah River Site. WSRC-MS-99-00499, Washington Savannah River Company, Aiken SC, 1999.

21. Standard for the Installation of Lightning Protection Systems. NFPA 780, current edition: 2000.

22. A. H. Weber. Tornado, Maximum Wind Gust, and Extreme Rainfall Event Recurrence Frequency at the Savannah River Site. WSRC-98-00329, Washington Savannah River Company, Aiken, SC, December 1998.

23. Natural Phenomena Hazards Design and Evaluation Criteria for Department of Energy Facilities. DOE Standard DOE-STD-1020-2002, U.S. Department of Energy, Washington, DC, January 2002.

24. SRS Engineering Standards Manual. WSRC-TM-95-1, Engineering Standard 01060, Structural Design Criteria, Rev. 8, Washington Savannah River Company, Aiken, SC, October 6, 2006.

25. Notices, Instructions and Reports to Workers: Inspection and Investigation. Code of Federal Regulations. 10 CFR 19, U.S. Nuclear Regulatory Commission, Office of the Federal Register, National Archives and Records Administration, U.S. Government Printing Office, Washington, DC.

26. G. L. Keenan. WSB Aircraft Impact Frequencies (U). S-CLC-F-00616, Rev. 0, Washington Savannah River Company, Aiken, SC, September 2007.

27. Accident Analysis for Aircraft Crash into Hazardous Facilities. DOE-STD-3014-96, U.S. Department of Energy, Washington, DC, May 2006.

28. List of Extremely Hazardous Substances. Code of Federal Regulations. 40 CFR 355, U.S. Environmental Protection Agency, Office of the Federal Register, National Archives and Records Administration, U.S. Government Printing Office, Washington, DC

29. Recommended Practice for Protection of Buildings from Exterior Fire Exposures. NFPA 80A, current edition: 2007.

30. WSRC, Safety Analysis Savannah River Site - Evaluation of Accident Risks in the Transportation of Hazardous Materials by Truck and Rail at the Savannah River Site. WSRC-RP-89-715, Rev 1, Washington Savannah River Company, Aiken, SC, September 1992.

31. Environmental Impact Statement on the Construction and Operation of a Proposed Mixed Oxide Fuel Fabrication Facility at the Savannah River Site, South Carolina. U.S. Nuclear Regulatory Commission Document NUREG-1767, U. S. Nuclear Regulatory Commission, Office of Nuclear Material Safety and Safeguards, Washington, DC, January 2005.

1.10 FIGURES

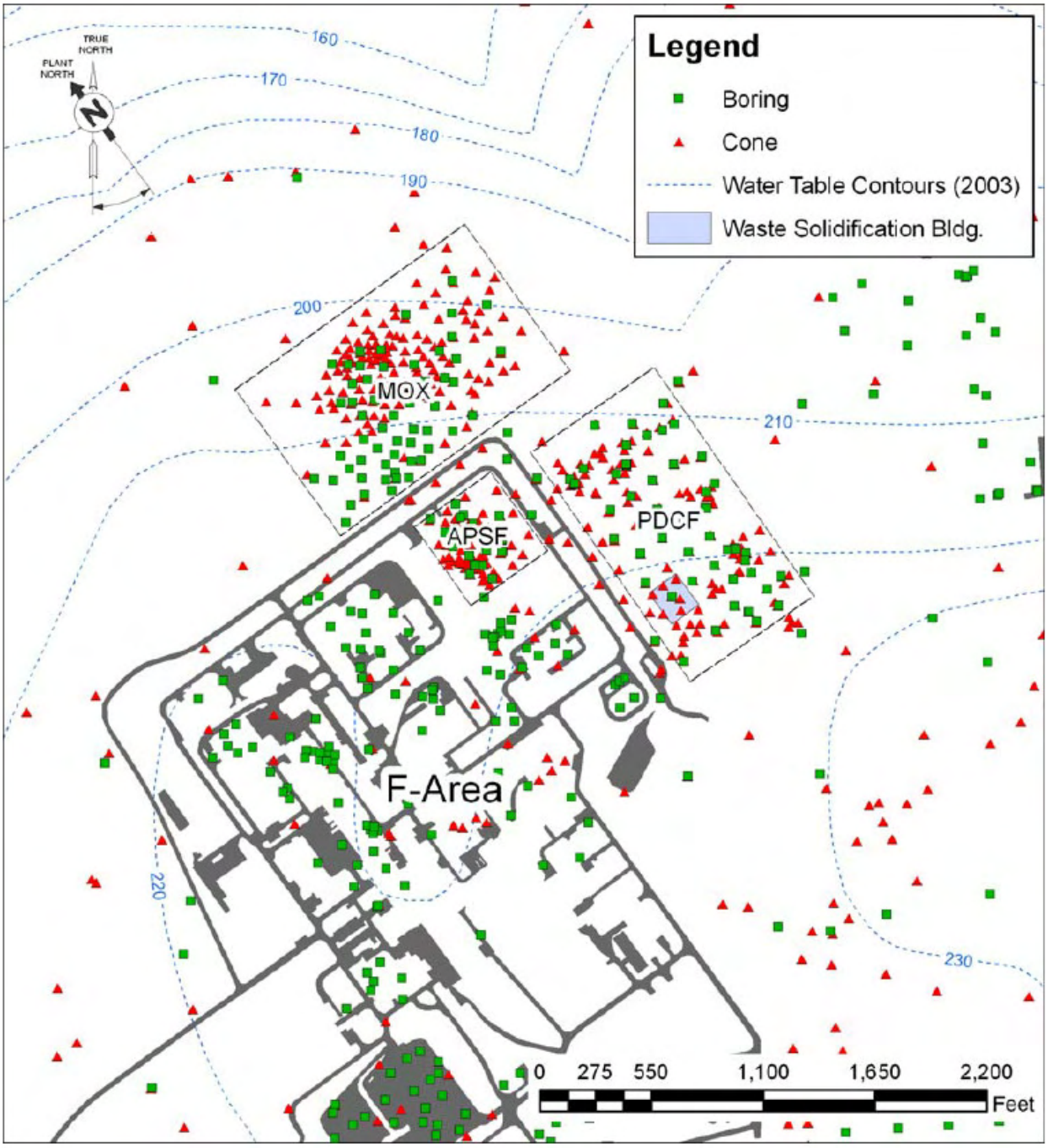

Figure 1.3-1 Location of WSB with Respect to F Area and Pit Disassembly and Conversion Facility (Ref. 10)

WASTE SOLIDIFICATION BUILDING PRELIMINARY DOCUMENTED SAFETY ANALYSIS

CHAPTER 2

FACILITY DESCRIPTION

JULY 2008

UNCLASSIFIED

DOES NOT CONTAIN UNCLASSIFIED CONTROLLED NUCLEAR INFORMATION

DC & Reviewing Official: David Allison
WSMS

Basis: IG-SR-03, 02/04
Date: 5/06/08

SAVANNAH RIVER SITE
Aiken, SC 29808 · www.srs.gov

PREPARED FOR THE U.S. DEPARTMENT OF ENERGY UNDER CONTRACT NO. DE-AC09SR18500

DISCLAIMER

This document was prepared by Washington Safety Management Solutions LLC (WSMS), under contract with Washington Savannah River Company (WSRC), subject to the warranty and other obligations of that contract and in furtherance of WSRC's contract with the United States Department of Energy (DOE).

Release to and Use by Third Parties. As it pertains to releases of this document to third parties, and the use of or reference to this document by such third parties in whole or in part, neither WSMS, WSRC, DOE, nor their respective officers, directors, employees, agents, consultants or personal services contractors (i) make any warranty, expressed or implied, (ii) assume any legal liability or responsibility for the accuracy, completeness, or usefulness, of any information, apparatus, product or process disclosed herein or (iii) represent that use of the same will not infringe privately owned rights. Reference herein to any specific commercial product, process, or service by trademark, name, manufacture or otherwise, does not necessarily constitute or imply endorsement, recommendation, or favoring of the same by WSMS, WSRC, DOE or their respective officers, directors, employees, agents, consultants or personal services contractors. The views and opinions of the authors expressed herein do not necessarily state or reflect those of the United States Government or any agency thereof.

CONTENTS

Page

2.0 FACILITY DESCRIPTION 2.1-1

2.1 INTRODUCTION 2.1-1

2.2 REQUIREMENTS 2.2-1

2.3 FACILITY OVERVIEW 2.3-1

2.3.1 Background 2.3-1

2.3.2 Mission 2.3-1

2.3.3 General Facility Description 2.3-1

2.4 FACILITY STRUCTURE 2.4-1

2.4.1 Waste Solidification Process Building 2.4-1

2.4.2 Exhaust Stack 2.4-1

2.4.3 Process Chemical Storage / Delivery 2.4-1

2.5 PROCESS DESCRIPTION 2.5-1

2.5.1 Waste Receipt 2.5-1

2.5.1.1 High Activity Waste Receipt 2.5-1

2.5.1.2 Low Activity Waste Receipt 2.5-2

2.5.2 Waste Concentration 2.5-2

2.5.2.1 High Activity Waste Concentration 2.5-2

2.5.2.2 Low Activity Waste Concentration 2.5-2

2.5.3 Waste Neutralization 2.5-3

2.5.3.1 High Activity Waste Neutralization 2.5-3

2.5.3.2 Low Activity Waste Neutralization 2.5-3

CONTENTS (continued)

Page

2.5.4 Waste Cementation 2.5-3

2.5.4.1 High Activity Waste Cementation 2.5-4

2.5.4.2 Low Activity Waste Cementation 2.5-4

2.5.5 Waste Staging/Shipment 2.5-4

2.5.6 Analytical Laboratory System 2.5-4

2.5.7 Process Control System 2.5-5

2.5.7.1 Main Process Control Sub-System 2.5-5

2.5.7.2 Safety Instrumented System Process Control Sub-System 2.5-5

2.6 CONFINEMENT SYSTEMS 2.6-1

2.6.1 Process Vessels 2.6-1

2.6.1.1 High Activity Waste Receipt Tanks 2.6-1

2.6.1.2 High Activity Waste Evaporator Head Tank 2.6-1

2.6.1.3 High Activity Waste Evaporator 2.6-2

2.6.1.4 High Activity Waste Bottoms Collection Tank 2.6-3

2.6.1.5 High Activity Waste Condensate Hold Tank 2.6-3

2.6.1.6 High Activity Waste Cement Head Tanks 2.6-4

2.6.1.7 High Activity Waste Acid Overflow Tank 2.6-5

2.6.1.8 Low Activity Waste Vessels 2.6-5

2.6.1.9 Floor Drain Collection Tank 2.6-6

2.6.1.10 Laboratory Drain Collection Tank 2.6-6

CONTENTS (continued)

Page

2.6.2 Process Vessel Vent Systems 2.6-6

2.6.2.1 High Activity Waste Process Vessel Vent System 2.6-7

2.6.2.2 Low Activity Waste Process Vessel Vent System 2.6-7

2.6.3 High Activity Waste Ventilation System 2.6-8

2.6.3.1 High Activity Waste Process Room Ventilation 2.6-8

2.6.3.2 High Activity Waste Sample Glovebox Ventilation 2.6-8

2.6.3.3 Laboratory Glovebox Ventilation 2.6-8

2.6.3.4 High Activity Waste/Low Activity Waste Cementation Enclosure Ventilation 2.6-9

2.6.4 Waste Solidification Building Ventilation 2.6-9

2.6.5 High Activity Waste Area Structure 2.6-9

2.6.6 Enclosures and Gloveboxes 2.6-10

2.6.6.1 High Activity Waste Sample Glovebox 2.6-10

2.6.6.2 Laboratory Glovebox 2.6-11

2.6.6.3 High Activity Waste Cementation Enclosure 2.6-11

2.6.6.4 Low Activity Waste Cementation Enclosure 2.6-12

2.6.7 High Activity Waste Transfer Line 2.6-12

2.6.8 High Activity Waste Cementation Line 2.6-12

2.6.9 High Activity Waste Sample Lines 2.6-13

2.6.10 High Activity Waste Process Lines 2.6-13

2.6.11 Seismic Isolation Equipment 2.6-13

CONTENTS (continued)

Page

2.7 SAFETY SUPPORT SYSTEMS 2.7-1

2.7.1 Evaporator Interlocks 2.7-1

2.7.2 Fire Barrier Walls 2.7-1

2.7.3 Fire Suppression System 2.7-2

2.7.4 Standby Power 2.7-3

2.8 UTILITY DISTRIBUTION SYSTEMS 2.8-1

2.8.1 Electrical Distribution System 2.8-1

2.8.2 Domestic Water Supply 2.8-2

2.8.3 Chilled Water System 2.8-2

2.8.4 Process Cooling Water 2.8-2

2.8.5 Service Water 2.8-3

2.8.6 Fire Water 2.8-3

2.8.7 Sanitary Waste Sewer 2.8-4

2.8.8 Stormwater Sewer 2.8-4

2.8.9 Process Sewer 2.8-4

2.8.10 Steam System 2.8-4

2.9 AUXILIARY SYSTEMS AND SUPPORT FACILITIES 2.9-1

2.9.1 Instrument Air System 2.9-1

2.9.2 Breathing Air System 2.9-1

2.9.3 Material Handling System 2.9-1

2.9.4 Communications System 2.9-2

2.9.5 Fluidic Pumping System 2.9-2

CONTENTS (continued)

Page

2.9.6 Safety and Health Monitoring System 2.9-2

2.10 REFERENCES 2.10-1

2.11 TABLES 2.11-1

2.12 FIGURES 2.12-1

TABLES

Page

Table 2.5-1 Waste Solidification Building Process Vessel Working Volumes 2.11-1

FIGURES

.....Page

Figure 2.3-1 Waste Solidification Building Site Plan 2.12-1

Figure 2.3-2 Waste Solidification Building First Level Floor Plan..... 2.12-2

Figure 2.3-3 Waste Solidification Building Second Level Floor Plan……2.12-3

Figure 2.3-4 Waste Solidification Building Roof Floor Plan 2.12-4

Figure 2.5-1 Waste Solidification Building High Activity Waste Process Flow Diagram . 2.12-5

Figure 2.5-2 Waste Solidification Building Low Activity Waste Process Flow Diagram .. 2.12-6

Figure 2.6-1 Typical High Activity Waste Vessel Arrangement 2.12-7

Figure 2.6-2 High Activity Waste Cement Head Tank 2.12-8

Figure 2.6-3 Waste Solidification Building Ventilation Concept 2.12-9

Figure 2.6-4 High Activity Waste Process Room Ventilation Area (First Level)..... 2.12-10

Figure 2.6-5 High Activity Waste Process Room Ventilation Area (Second Level) 2.12-11

Figure 2.6-5 Drum Mixing Unit 2.12-12

Figure 2.7-1 Waste Solidification Building First Level Fire Arrangement..... 2.12-13

Figure 2.7-2 Waste Solidification Building Second Level Fire Arrangement 2.12-14

Figure 2.7-3 High Activity Waste Area Fire Barriers (First Level) 2.12-15

Figure 2.7-4 High Activity Waste Area Fire Barriers (Second Level)..... 2.12-16

Figure 2.7-5 High Activity Waste Process Vessel Vent Room #1 Fire Barriers (First Level) 2.12-17

Figure 2.7-6 High Activity Waste Process Vessel Vent Room #2 Fire Barriers (Second Level) 2.12-18

Figure 2.7-7 Cementation Area Fire Barriers (First Level)..... 2.12-19

Figure 2.7-8 Cementation Area Fire Barriers (Second Level) 2.12-20

FIGURES (continued)

Page

Figure 2.8-1 Waste Solidification Building Normal Electrical Power Distribution (Sheet 1 of 2) 2.12-21

Figure 2.8-2 Waste Solidification Building Normal Electrical Power Distribution (Sheet 2 of 2) 2.12-22

Figure 2.8-3 Waste Solidification Building Uninterruptible Power Source Electrical Power Distribution 2.12-23

Figure 2.8-4 Waste Solidification Building Diesel Generator Electrical Power Distribution 2.12-24

Figure 2.9-1 Fluidic Pumping System 2.12-25

ACRONYMS

AGS	American Glovebox Society
AOT	Acid Overflow Tank
DOE	Department of Energy
EHT	Effluent Hold Tank
ETP	Effluent Treatment Project
HAW	High Activity Waste
HEPA	High Efficiency Particulate Air
HVAC	Heating, Ventilation, and Air Conditioning
kV	Kilovolt
kVA	Kilovolt-ampere
LAW	Low Activity Waste
LLW	Low Level Waste
MCC	Motor Control Center
MFFF	Mixed Oxide Fuel Fabrication Facility
NFPA	National Fire Protection Association
NNSA	National Nuclear Security Administration
NPH	Natural Phenomena Hazards
PC	Performance Category
PCS	Process Control System
PDSA	Preliminary Documented Safety Analysis
PDCF	Pit Disassembly and Conversion Facility
PSW	Process Cooling Water
PVV	Process Vessel Vent
PVVS	Process Vessel Vent System
RCRA	Resource Conservation and Recovery Act
SDD	System Design Description
SHM	Safety and Health Monitoring
SRS	Savannah River Site
TRU	Transuranic
UPS	Uninterruptible Power Source
V	volt
WAC	Waste Acceptance Criteria
WIPP	Waste Isolation Pilot Plant
WSB	Waste Solidification Building
WSRC	Washington Savannah River Company

2.0 FACILITY DESCRIPTION

2.1 INTRODUCTION

The objective of this chapter is to provide the Waste Solidification Building (WSB) facility and process descriptions and relationships of structures, systems, and components to support assumptions used in the hazard and accident analyses. A graded approach was established for this chapter by providing a model of the facility that would allow an independent reader to develop an understanding of facility operations and an appreciation of the facility structure without extensive consultation of the references. The level of detail required in the facility description is based on the significance of preventive and mitigative features identified and the degree of facility complexity necessary to understand the analyses. The WSB facility descriptions presented in this chapter are intended as a general reference for the Preliminary Documented Safety Analysis (PDSA) user. Configuration and performance criteria are contained in Chapter 4 of this PDSA. Sketches are developed from Process and Instrumentation Diagrams, detail drawings, equipment arrangement drawings, and other drawings and are not to scale. All dimensions are “nominal” or “reference” values and are provided for information only.

The mission of the WSB is to convert liquid waste streams generated from the Pit Disassembly and Conversion Facility (PDCF) and the Mixed Oxide Fuel Fabrication Facility (MFFF) into a solid form. The processed waste is packaged and sent to E Area and eventually to off site disposal facilities. The WSB team is committed to treat and dispose of these liquid waste streams in such a manner that the health and safety of the facility worker, the co-located worker, the offsite general public, and the environment are protected.

2.2 REQUIREMENTS

Design codes, standards, regulations, and U.S. Department of Energy (DOE) Orders required for establishing the facility safety basis specific to this chapter and pertinent to the safety analysis include the following:

- DOE Order 420.1B (Ref. 1)
- Title 10 Code of Federal Regulations Part 830, Safety Basis Requirements (Ref. 2)
- DOE-STD-3009-94 (Ref. 3)
- Washington Savannah River Company (WSRC) Procedure Manual E7, Procedure 2.25 (Ref. 4)
- WSRC Standards/Requirements Identification Document (Ref. 5)

2.3 FACILITY OVERVIEW

2.3.1 BACKGROUND

The Office of Defense Nuclear Nonproliferation requested WSRC to design the WSB to treat specific high and low activity liquid waste streams from the MFFF and the PDCF.

PDCF operations include receiving weapons grade plutonium, converting the plutonium metal to an oxide, and shipping the oxide to MFFF. MFFF operations include the conversion of surplus plutonium oxide, depleted uranium oxide, and the PDCF plutonium oxide into mixed oxide fuel suitable for use in commercial nuclear reactors.

2.3.2 MISSION

The mission of the WSB is to process the following liquid waste streams from the PDCF and the MFFF:

- PDCF laboratory liquid waste stream
- MFFF High Activity Waste (HAW) stream
- MFFF stripped uranium waste stream

The liquid streams are processed into solid waste forms acceptable for shipment and disposition as Transuranic (TRU) waste and as Low Level Waste (LLW) to be disposed offsite via the Savannah River Site (SRS) waste management facilities. The WSB is scheduled to be operational to support MFFF operations. The WSB supports the MFFF and PDCF with a 15 year operation period and has a 30-year design life.

2.3.3 GENERAL FACILITY DESCRIPTION

The WSB is located within the 200-F Area and adjacent to the planned location of PDCF and MFFF. The WSB site plan is detailed in Figure 2.3-1. The process building is a reinforced concrete structure. The site also contains a covered staging area for waste containers (empty and filled). The staging area consists of a steel roof on structural steel members over a concrete pad. This area is used for staging WSB TRU job waste, solidified TRU waste, and solidified LLW prior to shipment to a disposal facility. The reinforced concrete process room structure is used to confine airborne contamination and shield the direct dose field associated with the HAW and Low Activity Waste (LAW) processes. The concrete structure houses the HAW and LAW Cementation Processes, the analytical laboratory, control room, and some balance of plant services. Activities carried out in the structure include waste receipt, waste concentration, waste neutralization, and waste cementation. Cementation is performed in Department of Transportation 7A drums inside dedicated enclosures. There are external areas dedicated to cold chemical feeds, steam generation, administration, electrical feeds, diesel electrical generation,

the exhaust stack, floor drain collection, and drum receipt and storage. The WSB Floor Plans (first level, second level, and roof) are displayed in Figures 2.3-2, 2.3-3, and 2.3-4.

Secondary containment features such as dikes, tanks, sumps, and jackets with associated leak detection and/or monitoring are provided for those areas with liquid waste spill potential. The major pieces of process equipment are tanks, pipes, evaporators, cementation equipment, agitators, and pumps.

The WSB is designed in accordance with Resource Conservation and Recovery Act (RCRA) requirements and constraints, but it is permitted under an Industrial Waste Water Treatment Permit (Ref. 6). The WSB is classified as a Hazard Category 2, Nonreactor Nuclear Facility per Reference 7. This classification is based on the estimated quantities of radioactive material (bounded by Am-241) processed in the building and is documented in the WSB Consolidated Hazards Analysis (Ref. 8).

2.4 FACILITY STRUCTURE

2.4.1 WASTE SOLIDIFICATION PROCESS BUILDING

The process building is a two-story reinforced concrete structure located at grade. The first level of the process building is be approximately 27,000 square feet (134 feet by 202 feet) and houses waste receipt tanks, LAW and HAW evaporators, cementation equipment, and control room operations. The HAW waste receipt and processing equipment is located in the HAW process room and the Cementation Area. These two areas are surrounded by 3-hour fire barriers to prevent the involvement of HAW solution in fire events that start in other areas. The HAW process room is separated into four sections by partition walls that extend only to the second level of the building and share a common ventilation system exhausted through High Efficiency Particulate Air (HEPA) filters. These rooms are not planned for frequent personnel occupation. The LAW processing area, laboratory, control room, HEPA filter rooms, mechanical equipment, and personnel areas occupy the majority of the first level. The second level of the process building primarily houses piping, a sampling glovebox for the HAW process, and other facility support equipment. A reinforced concrete area is provided for confinement and shielding protection for the HAW process. The HAW and LAW process areas with spill potential have secondary containment features, such as sumps, stainless steel liners, or a floor drain collection system to facilitate contamination clean-up and leak detection to alert operators of potential problems. Figures 2.3-2 and 2.3-3 provide a plan view of the first and second levels of the WSB. The entire facility structure is designed and built to Performance Category (PC) 3+ (seismic) criteria and PC-3 wind/tornado criteria as directed by the National Nuclear Security Administration (NNSA) (Ref. 9).

2.4.2 EXHAUST STACK

Adjacent to the WSB is an exhaust stack. The stack is located off the southeast corner of the facility near the exhaust fan room and is approximately 50 feet tall. The stack is constructed to Natural Phenomena Hazards (NPH) PC-3+ criteria and is located approximately 30 feet to the southeast of the WSB. The stack has an internal diameter of approximately 60 inches and carries an exhaust flow of approximately 60,000 cubic feet per minute. Air discharged from the stack is monitored for radioactive contamination. The stack exhausts air from the WSB building ventilation, HAW process room ventilation and HAW and LAW Process Vessel Ventilation Systems (PVVS).

2.4.3 PROCESS CHEMICAL STORAGE / DELIVERY

The cold chemicals used at the WSB are 50 weight percent (wt. %) nitric acid and 50 wt. % sodium hydroxide. The sodium hydroxide is delivered to the WSB via truck and is stored in a tank outside of the WSB. The sodium hydroxide tank has a working volume of 4,500 gallons. The tank is located within an uncovered, diked area to collect overflow. A sump is located within the diked area. The sodium hydroxide storage tank and all sodium hydroxide lines are heat traced. The 50 wt. % sodium hydroxide is pumped from the storage tank to the caustic header,

which supplies caustic to the HAW cement head tanks, the LAW cement head tanks, and the Effluent Hold Tank (EHT). The caustic is transferred into the building via a dedicated caustic line. The amount and rate of caustic addition to the cementation head tank is controlled by a metering pump.

Nitric acid is delivered to the WSB in portable totes that are filled by a vendor at an offsite location and are connected to a transfer pump, located outside of the process building, for use in the facility. The storage capacity of a tote is 55 to 300 gallons, depending on need. The tote is passively vented to the atmosphere and is located within a diked area to collect overflow. A sump is located within the diked area. The 50 wt. % nitric acid is pumped from the storage tote into the WSB facility as needed. Nitric acid is supplied to HAW and LAW cement head tanks, HAW and LAW head tanks, the Acid Overflow Tank (AOT), and the EHT.

Nitric acid is not typically used as a process additive but is used for miscellaneous process support functions on an as-needed basis. Nitric acid is used for cleaning out the heels in some of the tanks and for an occasional addition to a cement head tank.

Additional chemicals are used at the WSB for water conditioning (chillers and steam supply), cementation, and laboratory analysis. Chemicals for water conditioning, cementation, and laboratory analysis are present in small quantities that do not pose significant hazards to workers or the public in excess of those commonly controlled and accepted as standard industrial hazards.

2.5 PROCESS DESCRIPTION

The WSB processes HAW and LAW streams through similar parallel concentration and solidification processes. Processing these streams results in the production of 55 gallon waste drums containing TRU waste and LLW. The WSB also includes an analytical laboratory to support these operations.

The HAW process includes waste receipt, volume reduction, and neutralization of the waste. This process is conducted in the HAW process room. Cementation of the waste is conducted outside of the HAW process room in the HAW cementation enclosure. A process flow diagram of the HAW process is shown in Figure 2.5-1. For additional information, see the HAW process flow sheet (Ref. 10).

The LAW process includes the handling and cementation of MFFF stripped uranium waste and PDCF laboratory liquid waste. The LAW process receives HAW overheads for processing. Overheads resulting from the LAW process are sent to the Effluent Treatment Project (ETP) or used as make-up for HAW dilution. A process flow diagram of the LAW Process is shown in Figure 2.5-2. For additional information refer to the LAW process flow sheet (Ref. 11).

The working volumes, as defined in the process flow sheets (Ref. 10,11), of the WSB process vessels are summarized in Table 2-5.1. These vessels are described in more detail in the following sections.

The WSB analytical laboratory receives both HAW and LAW samples. The sample analyses provide process control information to ensure that cement batches and effluent streams comply with ETP, SRS solid waste, Waste Isolation Pilot Plant (WIPP), and Nevada Test Site Waste Acceptance Criteria (WAC). WSB laboratory liquid waste is collected in the laboratory drain collection tank and periodically transferred to the LAW process.

2.5.1 WASTE RECEIPT

2.5.1.1 High Activity Waste Receipt

HAW from the MFFF is transferred via an underground line to the WSB. The transfer line is a 1.5-inch diameter stainless steel line with a stainless steel jacket for secondary containment that slopes back to the MFFF. The boundary for WSB ownership of the line is considered to begin at the MFFF High alpha waste line isolation valves within MFFF (Ref. 12). The line enters the HAW process room from underground through the floor slab and rises to the top of the HAW receipt tanks for discharge. The location and operation of the transfer pumps will be the responsibility of the MFFF. The WSB controls transfers through the use of manual double isolation valves positioned upstream of the receipt tanks, an automatic control valve, and a pump kill switch.

The HAW stream received from MFFF is stored in two 2,500-gallon tanks located in the HAW process room. The amount of MFFF HAW transferred to the WSB will be approximately 10,000 gallons per year plus the additional volume of the pipe flushes.

2.5.1.2 Low Activity Waste Receipt

LAW from the MFFF and the PDCF is transferred via underground lines to the WSB. The transfer line from the MFFF is a 1.5-inch diameter stainless steel line. The transfer line from the PDCF is a 2-inch diameter stainless steel line. Both LAW transfer lines have a stainless steel jacket to provide secondary confinement and are sloped back to the sending facility. The boundary for WSB ownership of the lines is considered to begin at the MFFF stripped uranium line isolation valves within MFFF and the PDCF laboratory liquids waste line isolation valves within PDCF (Ref. 12). The lines enter the facility and rise up to the top of the receipt tanks for discharge. The location and operation of the transfer pumps will be the responsibility of the transferring facility. The WSB controls transfers through the use of double isolation valves positioned upstream of the receipt tanks and a pump kill switch.

The LAW consists of PDCF laboratory liquid waste and MFFF stripped uranium waste. The PDCF liquid waste is stored in one tank and the MFFF stripped uranium waste is stored in two tanks. The LAW receipt tanks are positioned in the area adjacent to the LAW evaporator.

2.5.2 WASTE CONCENTRATION

2.5.2.1 High Activity Waste Concentration

HAW feed is transferred from the receipt tanks to the HAW evaporator head tank. In the HAW evaporator head tank, process water and/or LAW evaporator overheads are added to dilute the feed. From the head tank, the diluted HAW feed is transferred to the HAW evaporator where it is concentrated. Evaporator overheads are condensed and collected in the HAW condensate hold tank. Evaporator bottoms are transferred to the HAW bottoms collection tank at the completion of the evaporation process.

The HAW overheads are further processed depending on activity level. Overheads with activity levels too high to be processed in the LAW evaporator are transferred back to the HAW evaporator head tank. Overheads that are sufficiently low in radionuclide content are transferred to the LAW evaporator head tank.

2.5.2.2 Low Activity Waste Concentration

The two LAW streams discussed above are sent separately to the LAW evaporator head tank. From the head tank, the feed is transferred to the LAW evaporator where the volume of waste to be treated is reduced by a factor of approximately 10 (i.e., the volume of the bottoms is one-tenth the volume of the feed) for the MFFF stripped uranium waste. The PDCF laboratory liquid waste is also reduced in volume, but only down to the point that a maximum chloride concentration of

500 milligrams per liter is reached. The PDCF laboratory liquid waste is diluted with either HAW overheads or process water prior to feeding into the evaporator. If LAW overheads are not used for HAW dilution, PDCF laboratory liquid waste and MFFF stripped uranium waste may be mixed prior to concentration. Evaporator overheads are condensed and collected in the EHT and following sampling sent to the ETP. Evaporator bottoms are transferred to the LAW bottoms collection tank.

2.5.3 WASTE NEUTRALIZATION

2.5.3.1 High Activity Waste Neutralization

The acidic bottoms in the HAW bottoms collection tanks are sampled and transferred to the cement head tanks where they are neutralized with caustic. From the cement head tanks, the bottoms are transferred to the cementation process. The cement head tanks include tank cooling water jackets and agitation to dissipate heat from the neutralization reaction and to keep precipitated particulate suspended.

2.5.3.2 Low Activity Waste Neutralization

The acidic bottoms in LAW bottoms collection tanks undergo neutralization in the same fashion as the HAW bottoms discussed above.

2.5.4 WASTE CEMENTATION

The WSB solidification process is performed by addition of liquid waste to cementatious dry materials in 55-gallon drums concurrent with mixing the waste and dry materials using a sacrificial paddle in each drum. A nominal 40 preloaded, sealed 55-gallon drums per week, (includes HAW and LAW), containing a sacrificial paddle and proper quantity of dry mix materials are obtained from a vendor and staged at the waste storage pad. The drums are bar coded as specified.

Daily, during operations, eight drums will be rotated to counteract compaction of the dry solids, loaded onto two pallets (four drums per pallet), banded, and delivered to the appropriate (HAW/LAW) cementation area. Drum movement is performed using a fork truck equipped with a drum handler. Each pallet is transported using a fork truck with standard tines to the cementation airlock and then placed on a transport system serving the cementation area. The pallet is carried by the transport system through the airlock into the cementation area. The preloaded drums are moved from the pallet using a bridge crane and relocated to a drum staging area. The pallet remains on the transport system.

Preloaded drums are processed through the cementation enclosure. Processed drums exit the cementation enclosure clean (decontaminated) with a filter vent installed in one bung hole and all

remaining bung holes sealed. The loaded drums are moved by a conveyor system to a storage zone to allow the grout to set. The storage area for the HAW has a shield wall to reduce personnel exposure. The storage period ends when the grout has solidified and there is no free liquid. The storage zone provides RCRA secondary containment and allows a visual inspection of the drums and the secondary containment for indications of liquid leakage. At the end of the storage period, the drums are weighed, surveyed (for surface dose rate), and then moved, individually in succession, using a bridge crane to a pallet located on the transport system. The pallet is carried via the transport system into the cementation airlock. Pallets containing loaded 55-gallon drums are transported via fork truck from the cementation area airlock to the Waste storage pad.

2.5.4.1 High Activity Waste Cementation

The HAW cementation process receives neutralized HAW bottoms from the HAW cement head tank via the HAW cementation transfer line. The 55-gallon drums, pre-loaded with the dry cement mixture, are received as discussed above. The waste is blended with the dry cement mixture inside the drum. During mixing, the drum is connected to the HAW PVVS. The mixing process occurs inside the HAW cementation enclosure in the cementation area. Approximately 800 drums of HAW per year are produced.

2.5.4.2 Low Activity Waste Cementation

The LAW cementation process receives neutralized LAW bottoms from the LAW cement head tank via the LAW cementation transfer line. The 55-gallon drums, pre-loaded with the dry cement mixture, are received as discussed above. During mixing, the drum is connected to the LAW PVVS. The mixing process occurs inside the LAW cementation enclosure in the cementation area. Approximately 1,000 waste containers of LAW per year are produced.

2.5.5 WASTE STAGING/SHIPMENT

The WSB has a weather shelter for staging its own job control waste and solidified waste. There is space for TRU job waste, low level job waste, solidified TRU waste from the HAW process, solidified LLW from the LAW process, empty waste drums, and drums preloaded with dry grout mix to be staged on a partially covered concrete pad outside the WSB. The pad measures 65 feet by 172.5 feet with the covered portion measuring 65 feet by 104 feet. TRU waste and LLW are shipped from this pad to other onsite facilities in preparation for ultimate disposal offsite.

2.5.6 ANALYTICAL LABORATORY SYSTEM

The analytical laboratory system provides the capability for chemically analyzing and physically characterizing in-process HAW and LAW materials and waste forms. The analysis is used to provide material characterization to provide in-process quality control for feed batching/blending operations and ensures that waste complies with the required applicable WAC.

HAW samples arrive in the laboratory via a dumbwaiter from the HAW sample glovebox on the second level. LAW samples are hand carried to the laboratory. In the laboratory, samples undergo various analytical tests to verify that process parameters are kept within specifications. Preparation and testing of samples occur in a glovebox and a series of hoods and benches utilizing various analytical tools. Samples are not stored or archived in the laboratory.

The laboratory includes several modules to support test requirements. The analytical system operations are primarily manual with some automation.

2.5.7 PROCESS CONTROL SYSTEM

The Process Control System (PCS) provides the necessary hardware, firmware, and software appropriately configured to perform monitoring, process control, and data acquisition functions on the various processes and activities for the WSB. The PCS consists of two subsystems: the main process control subsystem and the safety instrumented system process control subsystem.

2.5.7.1 Main Process Control Sub-System

The PCS provides for the operation, control, and monitoring of the WSB process and support systems as well as the primary interface between the operators in the control room, local control stations, and the facility. The PCS additionally provides alarm handling and management capabilities, asset management of resources, and provisions for shutdown of the facility to a safe mode. The PCS collects operational data for process trending, archiving, and reporting purposes, and makes that data available, as required. This system is powered through an uninterruptable power supply. Major components of the system include the following:

- Process controllers
- Operator human system interface
- Local control stations
- Process software
- PCS historian
- Asset management software

2.5.7.2 Safety Instrumented System Process Control Sub-System

The safety instrumented system consists of redundant logic solvers, monitors, and final control elements. The safety instrumented system provides a Safety Significant interlock function for the HAW and LAW evaporator temperature and steam pressure, the HAW process room ventilation system, and HAW Process Vessel Vent (PVV) system. Control signals for these systems are provided through the safety instrumented system. The Safety Significant alarms are also provided in the control room through dedicated annunciators. Backup power is provided to this system from the diesel generator.

2.6 CONFINEMENT SYSTEMS

2.6.1 PROCESS VESSELS

Typical process vessels have all connections at the tank top with the exception of the overflow lines which are located to maintain a minimum headspace. Process streams are received in tanks through downcomers with anti-siphon vents. Figure 2.6-1 provides a typical tank arrangement.

2.6.1.1 High Activity Waste Receipt Tanks

HAW is received from MFFF into the HAW receipt tanks. There are two vessels with a working volume of 2,500 gallons each. The vessels are constructed of stainless steel with an inside diameter of approximately 8 feet and an internal height of approximately 9 feet. The tank wall and bottom thickness is 5/16 inch. The tank top thickness is 9/16 inch. There is a minimum headspace above the overflow of 1 foot in each vessel. All tank to tank connections include anti-siphon vents.

The HAW receipt tank inputs include HAW liquid (MFFF high alpha) and service water. Tank outputs include HAW liquid to the HAW evaporator head tank and flush water to the AOT. Between the two receipt tanks, the valves and piping are configured to allow the receipt of HAW liquid into either of the tanks and the transfer of the contents from either tank to the other. The tanks are vented by the PVVS to ensure that there is no hydrogen buildup. Each of the tanks is connected to an overflow line that gravity drains to the AOT. These tanks are instrumented for liquid density, liquid level, and tank differential pressure and are equipped with agitators and a fluidic pumping system.

The HAW receipt tanks and attached HAW piping have a Functional Classification of Safety Significant and are designed and installed to meet NPH PC-3+ (seismic) standards.

For further details of the HAW receipt tanks, see the HAW System Design Description (SDD) (Ref. 13).

2.6.1.2 High Activity Waste Evaporator Head Tank

The HAW evaporator head tank is used to adjust, through dilution, the HAW liquid from the HAW receipt tanks and the AOT in preparation for either the evaporation step or, if evaporation is not required, transfer to the HAW bottoms collection tank. Dilution is provided by overheads from the LAW Evaporator or service water. The vessel has a working capacity of 5,000 gallons. It is constructed of stainless steel with an inside diameter of approximately 10 feet and an internal height of approximately 11 feet. The tank wall and bottom thickness is 5/16 inch. There is a minimum headspace above the overflow of 1 foot in the vessel. All tank to tank connections include anti-siphon vents.

The tank inputs include HAW liquid from the HAW receipt tanks, HAW liquid from the AOT, acid, service water, overheads from the LAW Evaporator, liquid from the LAW evaporator head tank, and recycle from the HAW bottoms collection tank. The tank outputs include adjusted HAW liquid, which may be sent to either the HAW evaporator, AOT, or directly to the bottoms collection tank, and samples of the tank contents. The tank is vented by the PVVS to ensure that there is no hydrogen buildup and any liquid overflow gravity drains to the AOT. The tank is instrumented for liquid level, liquid density, and tank differential pressure and is equipped with an agitator and a fluidic pumping system.

The HAW evaporator head tank and attached HAW piping have a Functional Classification of Safety Significant and are designed and installed to meet NPH PC-3+ (seismic) standards.

For further details of the HAW evaporator head tank, seethe HAW SDD (Ref. 13).

2.6.1.3 High Activity Waste Evaporator

The HAW evaporator is used to reduce the volume of HAW liquid and concentrate the acid. It is connected to a condenser that treats the overheads from the evaporator with the condensate going to the HAW condensate hold tank and the non-condensable vapors going to the PVV system. The liquid product of the evaporator (concentrated HAW liquid) is transferred to the HAW bottoms collection tank.

The HAW evaporator is a tube-and-shell batch type evaporator with a demister assembly. The shell is 6 feet in diameter by 12 feet high (including the mist de-entrainment section) with a conical center draining bottom and a maximum operating volume of 1,000 gallons. It is constructed of stainless steel. The tube bundle consists of approximately 400 Hastelloy G-30 tubes, nominally 5 feet long, each with a diameter of ¾ inch and a wall thickness of 0.109 inches. Steam is supplied to the tube bundle at less than 25 pounds per square inch, gauge, at a rate of 2,150 pounds per hour to provide heating of the HAW liquid.

The condenser is a single-pass counter-flow type condenser with the evaporator overheads vapor flowing top to bottom through the internal tubes and the cooling fluid flowing bottom to top through the condenser shell. The overall size is 18 inches in diameter by 8 feet 4 inches high with a conical bottom draining to the HAW condensate hold tank. The condenser shell is constructed of Schedule 80 stainless steel pipe and fittings with flanged and welded joints. There are approximately 280 condenser internal tubes made of stainless steel. They are 1 inch in diameter and nominally 6 feet long with a wall thickness of 0.083 inch. The cooling water flow rate through the shell is approximately 300 gallons per minute.

Evaporator inputs include adjusted HAW liquid from the HAW evaporator head tank, steam, and service water for flushing the demister. Evaporator outputs include concentrated HAW liquid, steam condensate, and overheads. At the completion of an evaporation cycle, the concentrated HAW liquid is gravity drained to the HAW bottoms collection tank. The instrumentation for the evaporator contents includes liquid temperature, liquid level, liquid density, and tank differential pressure. For the heating coils, the input steam pressure is instrumented. Instrument air is

provided to keep pressure on the coils at all times to prevent in-leakage in case of coil failure.

The HAW evaporator and attached HAW piping have a Functional Classification of Safety Significant and are designed and installed to meet NPH PC-3+ (seismic) standards.

For further details of the HAW evaporator, see the HAW SDD (Ref. 13).

2.6.1.4 High Activity Waste Bottoms Collection Tank

The HAW bottoms collection tank receives bottoms material from the HAW evaporator. The waste stream is sampled at this point, prior to further processing, to ensure that it meets the requirements for disposal at WIPP. If these requirements are not met, the tank contents can be transferred back to the HAW head tank for reprocessing. HAW bottoms that are within specifications are transferred to the HAW cement head tanks for neutralization.

The HAW bottoms collection tank is used to collect, cool, and store the liquid product from the HAW evaporator or the HAW liquid transferred directly from the HAW evaporator head tank. The tank has a working capacity of 600 gallons. It is constructed of stainless steel with an inside diameter of approximately 5 feet and an internal height of approximately 6 feet, 4 inches. The tank wall and bottom thickness is 1/2 inch. The tank top thickness is 5/8 inch. There is a minimum headspace above the overflow of 1 foot in the vessel. All tank to tank connections include anti-siphon vents. This tank has an integral cooling coil. The coil is a single cylindrical helix with 2 inch spacing between coil turns. The coil is constructed of 1½ inch Schedule 40 stainless steel pipe and uses process cooling water as the heat transfer fluid.

The tank inputs include evaporator bottoms, adjusted liquid from the HAW evaporator head tank and service water. The tank outputs include collected liquid for recycle (to HAW evaporator head tank), collected liquid to the HAW cement head tanks and samples of tank contents. The tank is vented by the PVV system to ensure that there is no hydrogen buildup. Any liquid overflow gravity drains to the AOT. The tank is provided with an internal agitator to ensure homogeneous waste transfers. The tank is instrumented for liquid density, liquid level, liquid temperature, and tank differential pressure and is equipped with an agitator and a fluidic pumping system. The cooling coil is instrumented for liquid flow and liquid temperature.

The HAW bottoms collection tank and attached HAW piping have a Functional Classification of Safety Significant and are designed and installed to meet NPH PC-3+ (seismic) standards.

For further details of the HAW bottoms collection tank, see the HAW SDD (Ref. 13).

2.6.1.5 High Activity Waste Condensate Hold Tank

The HAW condensate hold tank is used to collect and store the condensed vapors (liquid) from the evaporator condenser and the LAW PVV subsystem. Based on sampling results, the liquid collected in the HAW condensate hold tank is either recycled to the HAW evaporator head tank or transferred to the LAW evaporator head tank. The vessel has a working capacity of 4,500

gallons. It is constructed of stainless steel with an inside diameter of approximately 10 feet and an internal height of approximately 10 feet with a sloped bottom. The tank wall and bottom thickness is 5/16 inch. The tank top thickness is 9/16 inch. There is a minimum headspace above the overflow of 1 foot in the vessel. All tank to tank connections include anti-siphon vents.

The tank inputs include condensate from the HAW evaporator condenser, condensate from the LAW PVV subsystem, and service water. The tank outputs include collected liquids to the HAW evaporator head tank, collected liquids to the LAW evaporator head tank, and samples of the tank contents. The tank is vented by the HAW PVVS to ensure that there is no hydrogen buildup. Any liquid overflow gravity drains to the AOT.

The tank is provided with an internal agitator. The tank is instrumented for liquid level, liquid density, liquid temperature, and tank differential pressure and is equipped with an agitator and a fluidic pumping system.

The HAW condensate hold tank and attached HAW piping have a Functional Classification of Safety Significant and are designed and installed to meet NPH PC-3+ (seismic) standards.

For further details of the HAW condensate hold tank, see the HAW SDD (Ref. 13).

2.6.1.6 High Activity Waste Cement Head Tanks

The two HAW cement head tanks receive acidic HAW bottoms for neutralization with caustic in preparation for cementation. Each vessel is sized to receive the quantity of waste required to make one 55-gallon drum of solidified waste. The neutralized HAW bottoms are transferred to the cementation process via the cementation transfer line.

The design of the two HAW cement head tanks is the same. Figure 2.6-2 is a simplified pictorial of the tanks.

The diameter of the upper portion of the tanks is 2 feet 7 inches. The diameter of the lower portion of the tanks is 1 foot 7 inches. The tanks are 4 feet 5 inches high including the external cooling jacket. The working capacity of the tanks is 30 gallons. These tanks empty from the bottom and have a conical bottom to facilitate draining. The tanks are fabricated from stainless steel. The tank wall and bottom thickness is 1/2 inch. The tank top thickness is 5/8 inch. There is a minimum headspace above the overflow of 1 foot in the vessel. All tank to tank connections include anti-siphon vents.

Transfers of neutralized waste from either tank are made with a single pump located external to the tanks. The tank inputs include collected liquid from the HAW bottoms collection tank, caustic solution, acid, and service water. The tank outputs include neutralized HAW solution to the cementation subsystem and samples of the tank contents. The tanks are vented by the PVV system to ensure that there is no hydrogen buildup. Any liquid overflow gravity drains to the AOT.

The tanks are provided with internal agitators to ensure slurried transfers. The bottom sections of the tanks are provided with external cooling jackets to remove the heat generated as caustic

solution is added to neutralize the HAW liquid. Process cooling water is used as the heat transfer fluid. The tanks are instrumented for liquid level, liquid density, liquid temperature, and tank differential pressure. The cooling jackets are instrumented for liquid flow and liquid temperature. The pump is instrumented for liquid flow.

The HAW cement head tanks and attached HAW piping have a Functional Classification of Safety Significant and are designed and installed to meet NPH PC-3+ (seismic) standards.

For further details of the HAW cement head tanks, see the HAW SDD (Ref. 13).

2.6.1.7 High Activity Waste Acid Overflow Tank

The AOT is used to receive solutions from various WSB internal generation sources (e.g., overflows from other HAW tanks, HAW tank cleaning flushes, and condensate from the HAW PVV system). The vessel has a working capacity of 1,600 gallons. It is constructed of stainless steel with an inside diameter of approximately 10 feet and an internal height of approximately 4 feet 11 inches. The tank wall and bottom thickness is 5/16 inch. The tank top thickness is 9/16 inch. There is a minimum headspace above the overflow of 1 foot in the vessel. All tank to tank connections include anti-siphon vents.

The tank inputs include service water, HAW sump, sampling glovebox drain, LAW evaporator head tank, acid, HAW PVV condensate, overflows from all other HAW tanks, and water/acid flushes from all other HAW tanks. The tank outputs include the collected inputs, which are transferred to only the HAW evaporator head tank, and samples of the tank contents. The tank is vented by the PVV system to ensure that there is no hydrogen buildup. Any liquid overflow is released to the process room through a weighted flapper valve. This tank is instrumented for liquid density, liquid level, and tank differential pressure and is equipped with an agitator and a fluidic pumping system.

The AOT and attached HAW piping have a Functional Classification of Safety Significant and are designed and installed to meet NPH PC-3+ (seismic) standards..

For further details of the HAW AOT, see the HAW SDD (Ref. 13).

2.6.1.8 Low Activity Waste Vessels

The LAW process is essentially the same as the HAW process; therefore the majority of the process vessels are similar. Differences include the receipt tank arrangement, the overflow gravity drain to the floor drain collection tank, and external pumps are fed from the bottom of the tanks. There are two stripped uranium receipt tanks with a working volume of 4,000 gallons each and one PDCF liquid receipt tank with a working volume of 3,000 gallons.

The LAW vessels and attached piping have a Functional Classification of Production Support and are designed and installed to meet NPH PC-2 (seismic) standards.

For further details of the LAW vessels, see the LAW SDD (Ref. 14).

2.6.1.9 Floor Drain Collection Tank

The floor drain collection tank collects liquid from floor drains, laboratory showers/eyewash stations, boiler blowdown, HAW evaporator steam condensate, LAW vessel overflow, and fire water from an activation of the sprinkler system. The tank is located underground outside of the process building. It is a double walled tank. Samples are taken and, depending on radioactive contamination levels, the contents are pumped to the LAW process or directly to ETP.

The floor drain collection tank is a 20,000 gallon double walled vessel with an internal shell of 304-L stainless steel and an external shell of carbon steel. The tank is equipped with density and level instrumentation as well as a leak detection system located between the tank shells.

The floor drain collection tank and attached piping have a Functional Classification of Production Support and are designed and installed to meet NPH PC-2 (seismic) standards.

For further details of the floor drain collection tank, see the WSB Building SDD (Ref. 15).

2.6.1.10 Laboratory Drain Collection Tank

The laboratory drain collection tank collects residual diluted HAW and LAW sample waste in a collection tank located in Room 131. When the tank reaches a prescribed level, it is pumped to the LAW evaporator head tank where it is sampled, analyzed, and processed through the LAW system. A water heel is established in the collection tank to help dilute corrosive chemicals to prevent a premature failure of the tank. HAW residual sample waste handled in the laboratory glovebox will be absorbed and discarded as waste or returned to the HAW systems process glovebox. The laboratory drain collection tank is a 120 gallon tank constructed of Hastelloy G-30.

The laboratory drain collection tank and attached piping have a Functional Classification of Production Support and are designed and installed to meet NPH PC-2 (seismic) standards.

2.6.2 PROCESS VESSEL VENT SYSTEMS

The HAW and LAW PVVSs remove gases from the process vessels of the WSB. Each vessel has a connection to the PVVS. The PVV maintains a differential pressure between the vessels and the process room. This differential pressure provides a minimum flow through the vapor space of each vessel from a HEPA filtered inlet air connection. Two dedicated exhaust fans are provided for each system one running and one in automatic standby, to pull a continuous vacuum on each system. The HAW PVVS is provided with an external connection point outside the WSB structure where a portable fan can be connected in the event of a system failure or maintenance activity. Figure 2.6-3 illustrates the overall facility ventilation concept including the tie in of the PVVSs.

2.6.2.1 High Activity Waste Process Vessel Vent System

The HAW process has the potential to build up hydrogen in the process vessels, which could lead to an explosion. The HAW PVVS provides dilution air to prevent the accumulation of hydrogen in the vessels. The HAW PVVS is Safety Significant and designed to function during and following an event that meets NPH PC-3+ (seismic) criteria and other WSB NPH design basis accidents. The system consists of two separate fan/HEPA trains separated by a 3-hour fire rated barrier to ensure that a single fire cannot disable the system. The PVV system is provided with NPH PC-3+ qualified backup power from a diesel generator system.

The HAW PVV lines from each vessel tie into a common stainless steel header. The intake air is filtered through HEPA filters. The exhaust air flows through the header and passes through a condenser and demister. The process chiller provides cooling for the condenser. The collected condensate gravity drains to the AOT. Connections and spray nozzles are provided to periodically flush the condenser and demister with water to reduce contamination and radiation rates. Air leaves the demister and is heated above the dew point by an electric heating coil. The air is then exhausted through two stages of HEPA filters, through the HAW PVV exhaust fan, and exhausted through the WSB exhaust stack.

The HAW PVV system is provided with a connection external to the process building where a portable blower may be attached to provide reliable dilution flow to the HAW vessels if the installed equipment is in a degraded state. The connection consists of a tap off of the HAW PVV exhaust header downstream of the PVV HEPA filters and prior to the PVV exhaust fan that is accessible outside. Two portable blowers are stored and maintained in a manner that allows for rapid deployment in the event that the operability of the installed PVV system becomes degraded.

2.6.2.2 Low Activity Waste Process Vessel Vent System

The LAW PVV System provides air sweep and confinement for the LAW process vessels. The system consists of a redundant fan and two stages of HEPA filtration. The LAW would require several years to generate sufficient hydrogen to cause an explosion in a vessel (Ref. 16). Since the LAW vessels do not have the potential to accumulate hydrogen above the lower flammability limit, this system is not required to provide dilution air flow to the level of reliability of the HAW PVV. LAW PVV lines from each vessel tie into a common stainless steel header. Intake air is filtered through two stages of HEPA filters. The exhaust air flows through the header and passes through a condenser and demister. The process chiller provides cooling for the condenser. The collected condensate gravity drains to the AOT. Connections and spray nozzles are provided to periodically flush the condenser and demister with water to reduce contamination. Air leaves the demister and is heated above the dew point by an electric heating coil. The air is then exhausted through two stages of HEPA filters, through the LAW PVV exhaust fan, and into the building exhaust duct upstream of the main building HEPA filter. The system is constructed to meet NPH PC-2 (seismic) qualifications.

2.6.3 HIGH ACTIVITY WASTE VENTILATION SYSTEM

The HAW area is divided into primary and secondary confinement ventilation zones to prevent the potential spread of contamination. The process area is supplied and exhausted through individual inlets and outlets to maintain the proper pressure differential between ventilation zones. Two dedicated Safety Significant exhaust fans are provided for the HAW ventilation system. The exhaust fans are provided with NPH PC-3+ qualified backup power from a diesel generator system. These fans provide motive force for the Safety Significant subsystems discussed in the following sections. An air supply unit provides conditioned air to the HAW process area. The air supply fans have interlocks to ensure that negative differential pressure is maintained between the HAW process room and the outside. These Safety Significant interlocks ensure that the room air exits the HAW process room through a filtered exhaust path.

2.6.3.1 High Activity Waste Process Room Ventilation

The HAW process room is equipped with a dedicated ventilation system to provide confinement of contamination and material released from HAW vessels following loss of confinement events. The HAW process room is exhausted through two stages of HEPA filters and the HAW ventilation exhaust fans. The exhaust ductwork from the HAW process room up to and including the first stage of HEPA filters is constructed to NPH PC-3+ (seismic) criteria. Figure 2.6-3 illustrates the overall facility ventilation concept including the tie in of the HAW Process Room ventilation. Figures 2.6-4 and 2.6-5 show the boundaries of the area serviced by this system.

2.6.3.2 High Activity Waste Sample Glovebox Ventilation

The HAW sample glovebox ventilation system provides confinement of airborne radiological material inside the glovebox. The HAW sample glovebox is exhausted through two stages of HEPA filters and the HAW ventilation exhaust fans. The HAW sample glovebox air intake is provided with HEPA filtration. The discharge is connected to the HAW ventilation system downstream of the HAW process room HEPA filters and is directed out of the exhaust stack.

Figure 2.6-3 illustrates the overall facility ventilation concept including the tie in of the HAW sample glovebox ventilation system.

2.6.3.3 Laboratory Glovebox Ventilation

The laboratory glovebox ventilation system provides confinement of airborne radiological material inside the glovebox. The laboratory glovebox is exhausted through two stages of HEPA filters and the HAW ventilation exhaust fans. The laboratory glovebox air intake is provided with HEPA filtration. The discharge is connected to the HAW ventilation system downstream of the HAW process room HEPAs and is directed out of the exhaust stack.

Figure 2.6-3 illustrates the overall facility ventilation concept including the tie in of the laboratory glovebox ventilation system.

2.6.3.4 High Activity Waste/Low Activity Waste Cementation Enclosure Ventilation

The HAW and LAW cementation enclosures' ventilation systems provide confinement of airborne radiological material inside the enclosures. The HAW and LAW cementation enclosures are exhausted through two stages of HEPA filters. The system pre-filters dust from the cementation process so that the main HEPA filters will not be impaired.

Figure 2.6-3 illustrates the overall facility ventilation concept including the tie in of the HAW/LAW cementation enclosure ventilation systems.

2.6.4 WASTE SOLIDIFICATION BUILDING VENTILATION

The Heating, Ventilation, and Air Conditioning (HVAC) system provides five separate exhaust systems for the WSB. One system is dedicated for the HAW process room, cementation gloveboxes, laboratory and HAW sample glovebox. The LAW and HAW PVVSs exhaust the process vessels. These systems are discussed in the preceding sections.

The administrative areas of the process building, including the control room and personnel areas, are connected to a dedicated recirculation system to provide HVAC. The air handling units and chiller for this system are located on the roof of the WSB.

The final system (the WSB ventilation system) provides exhaust for the remainder of the facility including the cementation area, the laboratory area, LAW area, and other support areas of the facility. This system has an operating exhaust fan and a back-up and is exhausted to the stack. The system contains HEPA filters located on the suction side of the fans.

Air supply units provide conditioned air to the WSB. The air supply fans have interlocks to ensure that negative differential pressure is maintained between the WSB process areas and outside.

Airlocks are located as needed, throughout the WSB to separate radiological areas and prevent the spread of contamination. The airlocks allow the ventilation system to maintain a lower pressure in and airflow through rooms that have the potential for higher levels of contamination.

2.6.5 HIGH ACTIVITY WASTE AREA STRUCTURE

The HAW area structure is a Safety Significant concrete structure designed to NPH PC-3+ (seismic) criteria and NPH PC-3 (wind/tornado) criteria for other WSB NPH design basis accidents that provides confinement for the HAW process, hot maintenance, TRU job waste processing room, and the HAW process support room.

The HAW area structure is constructed with minimal installed combustible materials. The HAW process vessels are located in the HAW process room inside the HAW area. The HAW process room is sub-divided into four separate sections separated by concrete walls that extend approximately half-way to the roof. The HAW receipt tanks and the HAW head tank are located in one section. The HAW evaporator is located in a section by itself. The HAW bottoms

collection tank and the HAW condensate hold tank share a section, and the HAW cement head tanks and the AOT share a section. A mezzanine runs above the vessels to allow access to equipment. Access to the HAW process room is available through two air locks on the second level. There are also hatches in the roof above the HAW room structure and in the ceiling above the hot maintenance area to facilitate equipment replacement.

The HAW maintenance/operations area is divided into two stories. The bottom floor contains the hot maintenance shop. The top floor contains the HAW sample glovebox, and access to the mezzanine of the HAW process room.

2.6.6 ENCLOSURES AND GLOVEBOXES

2.6.6.1 High Activity Waste Sample Glovebox

The HAW sample glovebox is located on the second level of the maintenance area inside the HAW area. It provides a Safety Significant function of protecting workers from spilled HAW solution.

Liquid samples used for process control and characterization are obtained from HAW process vessel samplers located within the sample glovebox. Samples from the HAW AOT, head tank, condensate hold tank, bottoms collection tank, and cement head tanks are transferred by air jet through stainless steel piping to the samplers located within the sample glovebox.

The sample glovebox contains five needle type samplers that deliver 10-milliliter aliquots of liquid to the sample bottle through the sample bottle lid. The sampler valves and piping are arranged to ensure that there is no sample cross contamination and that the sampler needles are easily accessible. The sampling operation is performed manually (assisted with hand tools) using leaded gloves to minimize radiation dose to the hands.

The sample glovebox is served by the HAW ventilation system to maintain negative pressure with respect to the room. Filled sample bottles are transferred out of the glovebox in a double-door transfer device. Liquid spills or washdown fluids are returned to the AOT via a directly piped gravity drain.

The HAW sample glovebox is a typical multi-station glovebox used for processing alpha-emitting radioactive materials and is constructed in conformance with American Glovebox Society (AGS) Standard G006, “Standard of Practice for the Design and Fabrication of Nuclear-Application Gloveboxes.”

The nominal overall dimensions of the glovebox are 21 feet 6 inches long by 2 feet 10 inches deep by 4 feet high. There are seven work stations at the working height of a standing person (approximately 4 feet) and one work station at an elevated working height of approximately 8 feet. Work stations are nominally 3 feet wide. Each work station has a pair of gloves. Five of the work stations are for obtaining samples of the process vessels and, therefore, contain a needle sampler device. The remaining work stations contain ancillary sampling equipment, space for equipment manipulation (e.g., sample transfer area), and other equipment required for glovebox

operation (e.g., fire suppression, ventilation, and instrumentation). The glovebox has one 10-inch diameter bag-in/bag-out port and a specially designed port for mating with a double-door transfer device.

The glovebox materials of construction are stainless steel and laminated glass.

Internal to the glovebox, a stainless steel sample transfer system is installed to horizontally convey sample vial holders between the samplers and the sample transfer area.

2.6.6.2 Laboratory Glovebox

The laboratory receives HAW process samples in the laboratory glovebox. It provides a Safety Significant function of protecting the immediate facility worker from spilled HAW solution. Samples arrive in a double door transfer container via a dumbwaiter from the HAW sample glovebox. The transfer container is mated up with the laboratory glovebox and the samples are removed. The glovebox is designed to prevent the release of radioactive and hazardous materials that could be inhaled, ingested, or contacted by facility personnel, as well as minimize personnel exposure to ionizing radiation. In the laboratory glovebox, the HAW samples are divided into aliquot portions and diluted as required for each specific analysis. Once the samples are prepared, they are moved through the glovebox airlock into an attached hood and on to various laboratory modules for analysis.

The laboratory glovebox is served by the HAW ventilation system to maintain negative pressure with respect to the room. Liquid spills or washdown fluids are collected in a catch pan installed in the bottom of the box.

The laboratory glovebox is a typical multi-station glovebox used for processing alpha-emitting radioactive materials and is constructed in conformance with AGS Standard G006, “Standard of Practice for the Design and Fabrication of Nuclear-Application Gloveboxes.”

The glovebox materials of construction are stainless steel and laminated glass.

2.6.6.3 High Activity Waste Cementation Enclosure

The in-drum mixing equipment includes two identical mixing units capable of blending the HAW neutralized liquid from the cement head tanks with the cementatious dry mix materials in the pre-loaded drums. Drums are mixed one at a time, and each unit has a throughput of eight drums per 24 hour day. Each unit is a glovebox system comprised of a drum entry airlock, drum mixing chamber, liquid loading chamber, and drum exit airlock. The drum mixing chamber and liquid loading chamber are sealed from each other to preclude contamination of the drum external surfaces. The units are constructed of stainless steel with nominal overall dimensions of 20 feet long (including entry and exit conveyors external to the gloveboxes), 42 inches wide, and 12 feet high. The two key components integral to the units are the drum elevator and fill/mix head. The fill/mix head is a device that seals to the drum lid and simultaneously provides the connection to the liquid fill line, mechanically engages the drum paddle shaft, and connects to the HAW PVV system.

During a typical drum mixing cycle, a pre-loaded drum is moved through the entry airlock into the drum mixing chamber and lifted by an internal elevator to seal a specially designed fill port located in the drum lid to the bottom of the liquid loading chamber. Next, the fill port cover is removed, the fill/mix head is attached to the fill port, and neutralized HAW liquid from a cement head tank is pumped into the drum while the sacrificial paddle installed within the drum is turned by the fill head paddle shaft. After mixing, the above steps are reversed and the drum is moved from the mixing chamber into the exit airlock. The drum is removed from the mixing unit upon confirmation of acceptable drum surface contamination levels. Figure 2.6-6 is a general depiction of one of the mixing units.

The HAW cementation enclosure provides a Safety Significant function of protecting workers from spilled HAW solution.

2.6.6.4 Low Activity Waste Cementation Enclosure

The LAW cementation system is identical to the HAW system with the exception that it does not provide a Safety Significant function and drums are connected to the LAW PVVS.

2.6.7 HIGH ACTIVITY WASTE TRANSFER LINE

The HAW transfer line from MFFF is double-walled stainless steel piping with a monitored annulus to detect leakage (monitoring is a function of the MFFF). The HAW transfer line slopes towards the MFFF vessel in order to prevent liquid waste from remaining in the line. The inner piping is 1½ inch Schedule 40 stainless steel. The outer piping is 2½ inch Schedule 40 stainless steel. The boundaries of this system, with regard to the WSB safety Basis, are located at the valve inside the MFFF and at the entry point into the HAW process room. After the transfer line enters the HAW process room, it is treated as a HAW process line. There are pneumatic and manual valves between MFFF and WSB that ensure positive control over the receipt of HAW liquid transfers into WSB. The transfer line is located a minimum of 5 feet (nominal) below grade and enters the WSB underground to preclude risks of damage typically associated with above-ground piping. The line is protected by a concrete cap placed above it and placards to preclude damage by inadvertent digging.

These components are Safety Significant and are designed and installed to meet the NPH PC-3+ (seismic) standards.

For further details of the HAW transfer line, see the HAW SDD (Ref. 13)

2.6.8 HIGH ACTIVITY WASTE CEMENTATION LINE

HAW solution is transferred from the HAW cement head tanks to the HAW cementation enclosure via a transfer line that is routed through and above occupied areas of the facility. The line is stainless steel Schedule 40 pipe with a stainless steel jacket. The line and jacket are protected within a chase between the HAW process room and cementation area. The HAW cementation line slopes towards the sending cementation enclosure in order to prevent liquid

waste from remaining in the line and ensure complete transfer of batches to the waste container. The line is Safety Significant and constructed to meet NPH PC-3+ (seismic) criteria.

2.6.9 HIGH ACTIVITY WASTE SAMPLE LINES

Several HAW vessels have sample lines that are connected to the HAW sample glovebox, including the HAW evaporator head tank, the HAW bottoms collection tank, HAW condensate hold tank, AOT, and the HAW cement head tanks. The sample lines are small diameter lines that circulate solution through the HAW sampler in the sample glovebox using air jets. The sample lines are bundled together in a jacket that drains back to the lined portion of the HAW process room. The jacket is an open sleeve that requires no monitoring or leak detection. The sample lines are Safety Significant and constructed to NPH PC-3+ (seismic) criteria.

2.6.10 HIGH ACTIVITY WASTE PROCESS LINES

Process lines connecting HAW vessels inside the HAW process room are constructed of a minimum of Schedule 40 stainless steel of various diameters depending on the line. All HAW process lines slope towards either the sending or receiving vessel in order to prevent liquid waste from remaining in the line. These lines are Safety Significant and are constructed to NPH PC-3+ (seismic) criteria.

2.6.11 SEISMIC ISOLATION EQUIPMENT

HAW process piping and vessels will be isolated by automatic valves upon the detection of a seismic event to prevent the release of HAW solutions outside the HAW process room. All of the HAW process vessels, as well as the piping up to and including the first seismically actuated isolation valves required to confine the pressure boundary of the HAW process system, are designed to NPH PC-3+ (seismic) criteria for confinement of the HAW solutions.

Three redundant seismic switches are connected using two out of three relay logic to actuate a solenoid valve. The seismic switches are powered by a battery with a continuous charger. De-energizing the solenoid valve isolates and vents instrument air to close the isolation valves. One isolation valve is provided inside the HAW process area for each sample line and one for every non-credited line which connects to a process vessel such as evaporator steam and cooling water, service water, bubblers, caustic feed, acid feed, and fluidic pump controls.

These systems have a Functional Classification of General Services and support the consequence analysis published in the mixed oxide Services Environmental Report (Ref. 17). These items are designed and constructed to PC-3+ seismic criteria per project input from NNSA. They are not credited with performing a safety function in this PDSA.

Details are located in design drawings (Ref. 18, 19).

2.7 SAFETY SUPPORT SYSTEMS

2.7.1 EVAPORATOR INTERLOCKS

The HAW and LAW evaporators have high evaporator temperature and high steam pressure interlocks. The high pressure interlock isolates the steam supply to the evaporator before the steam coil pressure exceeds 25 pounds per square inch, gauge. The high temperature interlock isolates the steam supply to the evaporator before the evaporator pot temperature exceeds 130° C.

These interlocks have a Functional Classification of Safety Significant.

2.7.2 FIRE BARRIER WALLS

The WSB process is classified as a mixed occupancy with an H-4 (Health-hazard) and Group F-2 (Factory Industrial Low-hazard) classification, and Special Purpose Industrial Occupancy, Hazard Category 2 facility. The process building is considered to be a low fire hazard facility and has an automatic fire suppression system throughout the facility. Figures 2.7-1 and 2.7-2 show the general arrangement of the fire protection areas. The established fire protection areas use 3-hour fire rated barriers to isolate key operations as follows:

- HAW area (see Figures 2.7-3 and 2.7.4)
- HAW PVV rooms (see Figures 2.7-5 and 2.7-6)
- Cementation Area (see Figures 2.7-7 and 2.7-8)

From these key operational areas, a total of six separate fire protection areas have been established per the Project Fire Hazards Analysis (Ref. 20), as follows:

- WSB FA-101 - High activity processing area
- WSB FA-102 - Cementation processing area
- WSB FA-103 - General support areas (remainder of building not covered by another fire area)
- WSB FA-104 – Low activity process area
- WSB FA-105 – PVV HEPA #1 area
- WSB FA-106 – PVV HEPA #2 area

These fire protection areas have been established utilizing fire rated barrier construction as the outer boundary of each area. The design criteria for the fire barriers is based on the International Building Code, the National Fire Protection Association (NFPA) 220 “Types of Construction,” NFPA 251 “Fire Resistance of Construction,” NFPA 221 “High Challenge Fire Barriers,” and Factory Mutual loss prevention data Sheets 1-19, “Fire Barrier Walls.” These barriers are

designed to go from the floor to the underside of the roof with all penetrating elements (dampers, doors, pen seals, etc.) designed to satisfy the fire rating.

Ventilation ductwork that passes through any fire barrier is provided with appropriately rated fire protection installed at the penetration per NFPA requirements.

More detailed discussion of the fire barriers is available in the Project Fire Hazards Analysis, the Fire Protection System Design Description, and the Building System Design Description (Ref. 20, 21, and 15).

The barriers surrounding the HAW area and HAW cementation area (WSB FA-101 and WSB FA-102) have a Functional Classification of Safety Significant.

2.7.3 FIRE SUPPRESSION SYSTEM

The WSB has a wet pipe sprinkler system to provide automatic fire suppression for the entire process building. The sprinkler system is installed per the requirements of NFPA 13 (Ref. 22).

Fire suppression water to the sprinklers is supplied from the existing F-Area underground firewater loop. The supply header enters the WSB through the floor slab.

The sprinkler system employs automatic closed glass bulb-operated sprinklers attached to a fixed piping subsystem containing water and connected to a water supply so that water discharges immediately from sprinkler heads actuated by a fire. Sprinklers are designed to activate at a certain temperature. The ordinary temperature sprinkler will activate at a specific temperature between 155-175º F.

The sprinkler design utilizes a riser check valve, pressure gauges on either side of the check valve, and a main drain. This valve constitutes the boundary of the building fire suppression system. This allows a monthly inspection of the system integrity, as required by NFPA 25 (Ref. 23). The main drain allows water to flow from the sprinkler system to prove that there has not been a degradation. Above the riser check, a flow switch for each fire zone is tied into the fire alarm system and acts as the initiation device for the fire alarm upon activation of the sprinkler system. Testing of the flow switch is performed per NFPA 25 (Ref. 23).

The fire suppression system for the HAW area and HAW cementation area of fire zones WSB FA-101 and WSB FA-102, respectively, have a Functional Classification of Safety Significant and are designed and installed to meet NFPA standards and retain position and pressure boundary (not function) for events that meet NPH PC-3+ (seismic) standards.

In addition to the Safety Significant portions of the fire suppression system described above, the fire protection system provides non-credited fire detection and notification. The fire protection system is designed for the following:

- Detect fires via heat and smoke detection
- Warn facility and area occupants of fire and smoke

- Control fire damage by fire water suppression (Safety Significant for HAW and cementation areas) and manual extinguishing
- Summon the Site Fire Department

The fire protection system includes subsystems or components for the following:

- Fire suppression water, standpipes, sprinklers, and fire hoses
- Fire and smoke detection
- Fire alarms
- Fire extinguishers
- Fire water collection
- Fire hydrants

2.7.4 STANDBY POWER

A standby power system provides an alternate source of electric power to specified critical loads during a loss of normal power. The critical loads powered by the standby power system are the PVV exhaust fans and associated isolation valves, HAW process room exhaust fans and their isolation dampers, and the Safety Significant logic solvers.

The standby power system is designed to come online within 60 seconds following loss of normal power and has diesel fuel capacity to run for seven days without refill. The diesel generator is designed to provide 660 kilovolt ampere (kVA) of motor starting load at 40% power factor with less than 35% transient voltage dip. The arrangement and connected loads of the standby power subsystem are shown on the WSB single line diagram (Ref. 24).

2.8 UTILITY DISTRIBUTION SYSTEMS

2.8.1 ELECTRICAL DISTRIBUTION SYSTEM

The WSB normal power distribution system is fed from F-Area South Carolina Electric and Gas Station 23. Once at the WSB, the electrical power is transformed (stepped-down) to 480 volts (V)/277 volts alternating current and distributed throughout the WSB for operation of equipment. The major normal power electrical loads are as follows:

- Main process exhaust fans, pumps, and agitators
- PVV exhaust fans
- Instrument air compressors
- Laboratory hood exhausters
- Laboratory hood booster Fan
- PVV re-heater
- Cementation process equipment
- PVV chiller
- Interior and exterior lighting
- Constant air monitors and radiation monitors
- Fire detection
- Freeze protection
- Electric boiler

Three 13.8 kilovolts (kV) to 480 V substation transformers provide power to nine Motor Control Centers (MCCs) and distribution panels located in the WSB. The transformers are designed with spill safeguards or containment systems for safety considerations. Disconnect switches are used to allow for maintenance, spare breakers are installed on the main bus of each switchgear, and standard metering and relaying are provided. Additional equipment/components that are part of the normal power subsystem include the 480 V/277 V and 480 V/208 V/120 V power distribution panels, cables, lighting panels, conduit and cable trays for routing cables, grounding conductors, lightning protection, and heat tracing (for the stack sampling system, the caustic feed line, the domestic water, service water, and the cooling tower water lines). The arrangement and connected loads of the normal power subsystem are shown on the WSB single line diagram (Ref. 24). Simplified diagrams showing the 251-F substation, the 13.8 kV to 480 V unit substations and the nine MCCs are provided in Figures 2.8-1 through 2.8-4.

An Uninterruptible Power Source (UPS) system provides low voltage electrical power to specified critical WSB loads during a loss of normal power for a minimum of 15 minutes. The UPS subsystem has a capacity of 30 kVA with a connected load of 24 kVA. The load is supplied

power from one MCC, with backup from an additional feed. The arrangement and connected loads of the UPS subsystem are shown on the WSB single line diagram (Ref. 24). A simplified diagram showing the automatic transfer switch, UPS supply, UPS distribution panel, and loads on the UPS is provided in Figure 2.8-3.

A standby power system provides an alternate source of electric power to specified critical loads during a loss of normal power. The critical loads powered by the standby power system are the PVV exhaust fans and associated isolation valves, HAW process room exhaust fans and their isolation dampers, and the safety significant logic solvers.

The standby power system is designed to come online within 60 seconds following a loss of normal power and has diesel fuel capacity to run for seven days without refill. The diesel generator is designed to provide 660 kVA of motor starting load at 40% power factor with less than 35% transient voltage dip. The arrangement and connected loads of the standby power subsystem are shown on the WSB single line diagram (Ref. 24). A simplified diagram showing the automatic transfer switch, diesel generator, and the MCCs with the loads on standby power is provided in Figure 2.8-4.

2.8.2 DOMESTIC WATER SUPPLY

The domestic water supply system supplies clean, potable water for personnel use. This system does not supply, interconnect, or share its function with the fire protection water supply system or any other water system. The domestic water supply system supplies the restrooms, water fountains, safety showers, hot water heater, breathing air compressor after coolers, and eye wash stations. The domestic water is supplied by the existing SRS domestic water distribution system.

2.8.3 CHILLED WATER SYSTEM

The chilled water subsystem provides chilled water for the air supply for the HVAC system to maintain the required temperature inside the process area, laboratory area, cementation area, and administrative area. The chilled water system is comprised of air-cooled chillers, chilled water circulating pumps, cooling coils, expansion tank, air separator, and chemical addition tank.

The chilled water system is a closed loop system that supplies chilled water to cooling coils in the air handling units. It is supplied by two air-cooled chillers and two centrifugal chilled water pumps. Chilled water supply temperature is 44º F and return temperature is 56º F. The chilled water system is supplied with make-up water from the service water system. The water quality of the system is maintained by chemical additions.

2.8.4 PROCESS COOLING WATER

The primary function of the process cooling water (PSW) system is to remove heat from various HAW and LAW tanks, condensers, and condensate coolers. The PSW subsystem is comprised of a cooling tower water loop, an isolation cooling water loop, and process cooling water loop.

The PSW is a closed loop system that circulates water via a process loop cooling water pump through the components described above and a heat exchanger. The isolation cooling water loop, which is also a closed loop system, circulates water via an isolation loop cooling water pump and through primary and secondary heat exchangers. The cooling tower water loop circulates water via the cooling tower water pump, through a secondary heat exchanger, and a cooling tower. This process removes the heat from HAW and LAW components through the primary heat exchanger, the secondary heat exchanger and the cooling tower. The cooling tower is a commercially available unit located on the roof of the WSB facility.

The primary PSW cooling water loop operates at a higher pressure than the HAW/LAW components to prevent process fluids from flowing into the primary PSW cooling loop and contaminating this water loop if a leak occurs in the piping. Similarly, the isolation cooling water loop (secondary PSW cooling water) operates at a higher pressure than the primary PSW cooling water loop to prevent potentially contaminated primary PSW from flowing into the isolation cooling water loop if a leak occurs in the piping.

For additional protection, the PSW loop is monitored for radiological contamination to detect leaks from the process into the PSW.

The process cooling water loop and isolation cooling water loop are provided with make-up water, expansion tanks, air separators, and chemical addition tanks. The cooling tower loop is provided with make-up water and a skid mounted cooling water chemical injection unit. The cooling tower blow-down is collected in the floor drain collection tank.

The water quality of this subsystem is maintained by chemical additions and an ozone injection system. Standard chemical feed packages are used for corrosion and biological fouling prevention. A packaged ozone injection system is used in the cooling tower water system to control biological growth. The cooling tower water loop uses an automatic blow-down due to the more frequent water additions to this open water loop.

The PSW System has a make-up tank that annunciates an alarm if make-up water is added to the system to indicate a leak in the system. Make-up water is supplied from the service water system (described in Section 2.8.5).

2.8.5 SERVICE WATER

The WSB service water is supplied from the F-Area service water system. Service water is used to dilute evaporator feed, flush process vessels, wash equipment, provide cooling make-up water, laboratory use, and various other cleaning applications.

2.8.6 FIRE WATER

The WSB fire suppression system is supplied from the F-Area fire water system.

2.8.7 SANITARY WASTE SEWER

The sanitary sewage waste system provides for the collection and channeling of uncontaminated liquid waste generated in the facility from the source to a new lift station located at the WSB facility. This lift station pumps through a new pipe that discharges to an existing sanitary sewer manhole just outside F Area and adjacent to E-Road. The sanitary sewer line is connected to the primary sanitary sewer system, which is treated by the central sanitary wastewater facility.

2.8.8 STORMWATER SEWER

The stormwater sewer system collects, confines, and channels all non-radioactive effluents outside the process building, exclusive of liquid sanitary waste, that are generated or result from natural sources from the facility. These effluents include the following:

- Water runoff from the facility plot, parking areas, and roads
- Drains from building roofs and gutters

The stormwater sewer system collects the effluents in a retention pond and channels the effluent to an existing permitted outfall.

2.8.9 PROCESS SEWER

The process sewer system provides for the collection and channeling of potentially contaminated liquid waste generated in the facility to a pump station located near the north east corner of the process building and on to the ETP. These effluents include the following:

- LAW evaporator steam condensate
- Floor drain collection tank contents following sampling (e.g., fire water and HAW steam condensate)
- LAW EHT contents following sampling (e.g., LAW overheads and LAW PVV condensate)
- Cooling tower blowdown

2.8.10 STEAM SYSTEM

The steam plant is housed in a pre-fabricated steel building structure that is located near the north end of the WSB. The electric steam boiler generates process steam for the HAW and LAW evaporators. The steam plant includes the electric steam boiler and all support equipment such as the deaerator/feed water tank, feed water pumps, steam regulating station, a boiler blow-down tank, make-up water softener, and a chemical addition pump. The steam supply piping runs to the WSB mechanical equipment room where the HAW and LAW evaporator steam control valve stations are located. To prevent possible cross-contamination of the steam plant from an evaporator coil leak, all condensate flowing out of the evaporator heating coils is discharged to the process sewer. Condensate discharged from the evaporators is monitored to detect

contamination from leaks in the heating coils. The HAW evaporator steam condensate is routed to the floor drain collection tank, sampled, and sent to the ETP or returned to LAW feed if contaminated. The LAW Evaporator steam condensate is routed to the ETP via the process sewer. Boiler blow-down, water softener back-flush, and deaerator/feed water tank drainage is routed to the sanitary sewer. Only condensate from traps inside the boiler building and upstream of the evaporator steam supply isolation valves is routed back to the boiler feed tank.

2.9 AUXILIARY SYSTEMS AND SUPPORT FACILITIES

2.9.1 INSTRUMENT AIR SYSTEM

The WSB plant air demand is provided from a single system. The instrument air system meets the requirements of both the instruments and the process equipment.

The instrument air system consists of two compressors, a wet receiver, a dryer, and a dry receiver. Instrument air is provided for process equipment including liquid level and specific gravity instrumentation, pneumatic valve operation, and vessel samplers.

Primary control/monitoring of the instrument air system is performed locally with the monitoring and status displayed in the main control room. A low pressure alarm annunciates in the control room upon a low instrument air pressure condition.

2.9.2 BREATHING AIR SYSTEM

The breathing air system provides breathing air for operations and maintenance personnel. The breathing air system consists of a breathing air compressor unit, breathing air receiver, an aftercooler, instrumentation, controls, and a piping distribution system. The breathing air compressor unit is located in the mechanical equipment room and has capacity to supply six simultaneous users wearing plastic suits with vortex tubes. Primary control/monitoring of the breathing air system is performed locally with the monitoring and status displayed in the main control room.

Design features of the Breathing Air System include audible and visual low breathing air pressure alarms, a backup air supply, and a breathing air supply carbon monoxide monitor. A high carbon monoxide alarm and the low breathing air pressure alarms annunciate in the main control room and at the breathing air panels in those rooms where air stations are located. The breathing air receiver is sized to provide a backup breathing air supply for six users for 5 minutes, to allow for the safe exit of the process areas. Alarms and interlocks are also provided to detect abnormal compressor operations, including compressor failure, high compressor air discharge temperature, and high aftercooler air discharge temperature.

2.9.3 MATERIAL HANDLING SYSTEM

The material handling system provides the lifting and movement capability within the cementation area of the WSB for the following activities:

- Movement of shielded transport units
- Receiving, storing, and transporting 55-gallon drums, B-25s, standard waste boxes, and 85-gallon overpacks
- Loading drums onto site vehicles

Material movement is accomplished via portable equipment (i.e., forklifts and hand carts), waste container conveyors, and hoists. The material handling system provides for movement of LLW and TRU waste.

2.9.4 COMMUNICATIONS SYSTEM

The communication system provides the means to communicate with facility personnel throughout the entire facility. Primary communications are made over an area public address system. Hand held radios, limited telephone services, and a link to the emergency operations center are provided.

2.9.5 FLUIDIC PUMPING SYSTEM

Transfers of solutions between HAW vessels are performed using fluidic pumps installed inside each vessel. These pumps consist of a charge vessel inside the tanks connected to a jet pump pair operated by instrument air and a reverse flow diverter as shown below. The system operates by pulling a vacuum on the charge vessel to pull solution in through the reverse flow diverter and then pressurizing the charge vessel to push the solution through the reverse flow diverter and on to the destination vessel. Figure 2.9-1 shows a fludic pumping system.

2.9.6 SAFETY AND HEALTH MONITORING SYSTEM

The WSB is equipped with a Safety and Health Monitoring (SHM) system. The SHM system provides the capability to monitor radiological and non-radiological hazards throughout the WSB facility. Radiological monitoring of the facility and workers will be performed to minimize personnel exposure and control the spread of contamination. Individuals will be monitored for external exposure to radiation/contamination using personnel dosimetry devices. Internal exposures are monitored using bioassay techniques. Monitoring of non-radiological hazards includes monitoring for chemicals during normal, maintenance, and accident conditions.

Routine surveys of radiation and contamination levels will be conducted in the WSB. The frequency of the surveys will depend on the radiological hazard level and the type of work being performed in the area. Workplace radiation monitoring consists of the use of both portable and fixed instrumentation to measure radiation levels and radioactive contamination (on surfaces and as airborne radioactivity).

The SHM system includes a radiological control office and counting room, which has the capability for calibrating radiation detection equipment using appropriate source materials and for counting smear pads used to check for transferable contamination. The WSB also provides personnel and equipment decontamination capabilities.

The SHM system consists of the following capabilities:

- Area radiation monitoring

- Airborne radiation monitoring
- Stack effluent monitoring
- Contamination control monitoring
- Personnel contamination monitoring
- Personnel dose monitoring
- Chemical and physical agent monitoring

2.10 REFERENCES

1. Facility Safety. DOE Order 420.1B, U.S. Department of Energy, Washington, DC, December 2007.

2. Nuclear Safety Management. Title 10 Code of Federal Regulations Part 830, Subpart B, Safety Basis Requirements, U.S. Department of Energy, Washington, DC.

3. Preparation Guide for U.S. Department of Energy, Nonreactor Nuclear Facility Safety Analysis Reports. DOE Standard DOE-STD-3009-94, Change Notice 3, U.S. Department of Energy, Washington, DC, March 2006.

4. Conduct of Engineering and Technical Support (U). WSRC Procedure Manual E7, Procedure 2.25, Rev. 15, Washington Savannah River Company, Aiken, SC.

5. Standards/Requirements Identification Document. WSRC-RP-94-1268, Washington Savannah River Company, Aiken, SC.

6. Waste Solidification Building Environmental Permit and Compliance Plan, WSRC-RP-2006-00706, Rev. 0, Washington Savannah River Company, Aiken, SC, June 4, 2007.

7. Hazard Categorization and Accident Analysis Techniques for Compliance with DOE Order 5480.23, Nuclear Safety Analysis Reports. DOE-STD-1027, Department of Energy, Washington, DC, September 1997.

8. Consolidated Hazards Analysis for the Waste Solidification Building. WSRC-TR-2007-00134, Revision 0, Washington Savannah River Company, Aiken, SC, March 2008.

9. Letter, WA-03-086 – Sterling Franks to Robert Pedde, Natural Phenomena Hazard Criteria for the Pit Disassembly and Conversion Facility Waste Solidification Building, September 9, 2003.

10. High Activity Waste System Process Flow Sheet Diagram, M5-F-2857.

11. Low Activity Waste System Process Flow Sheet Diagram, M5-F-2858.

12. Draft Preliminary Engineering Report, Nuclear Nonproliferation Program Waste Solidification Building. Q-PER-F-00-00001, Rev. 2, Washington Savannah River Company, Aiken, SC, December 2006.

13. Waste Solidification Building System Design Description for High Activity (H/A) Waste System. X-SYD-F-00012, Rev. 4, Washington Savannah River Company, Aiken, SC, November 2007.

14. Waste Solidification Building Low Activity Waste System System Design Description. X-SYD-F-00013, Washington Savannah River Company, Aiken, SC.

15. Waste Solidification Building System Design Description for Building Structures System. G-SYD-F-00022, Rev. 3, Washington Savannah River Company, Aiken, SC, November 2007.

16. Waste Solidification Building Tanks Hydrogen Times to LFL (U). S-CLC-F-00608, Rev. A, Washington Savannah River Company, Aiken, SC, May 2007.

17. Environmental Impact Statement on the Construction and Operation of a Proposed Mixed Oxide Fuel Fabrication Facility at the Savannah River Site, South Carolina. U.S. Nuclear Regulatory Commission, Office of Nuclear Material Safety and Safeguards, Washington, DC, January 2005.

18. Waste Solidification Building Instrument Air Distribution Piping and instrumentation Diagram, M-M6-F-4155, Washington Savannah River Company, Aiken, SC.

19. Waste Solidification Building Seismic Monitor VS-4231C and Solenoid Valve HY-4231 Schematic Diagrams, E-E4-F-9769, Washington Savannah River Company, Aiken, SC.

20. Project Fire Hazards Analysis for Waste Solidification Building. F-FHA-F-00033, Rev. C, Washington Savannah River Company, Aiken, SC, November 2007.

21. Waste Solidification Building System Design Description for Balance of Plant Support. G-SYD-F-00023, Rev. 3, Washington Savannah River Company, Aiken, SC, November 2007.

22. Standard for the Installation of Sprinkler Systems, NFPA 13, National Fire Protection Association, Quincy, MA, 1999 Edition.

23. Standard for the Inspection, Testing, and Maintenance of Water-based Fire Protection Systems, NFPA 25, National Fire Protection Association, Quincy, MA, 1998 Edition.

24. Waste Solidification Building Electrical Power Distribution System 13.8kV/480 Volt Single Line Diagram. Sheets 1 and 2,E-E2-F-3271, Rev. H, United States Department of Energy, October 2007.

2.11 TABLES

Table 2.5-1 Waste Solidification Building Process Vessel Working Volumes

Tank/Vessel	Number of Tanks/Vessels	Contents	Working Volume (gal/tank)
PDCF laboratory liquids storage tank	1	Unprocessed waste	3,000
MFFF stripped uranium receipt tank	2	Unprocessed waste	4,000
HAW receipt tanks	2	Unprocessed waste	2,500
HAW head tank	1	Unprocessed waste	5,000
HAW evaporator	1	HAW bottoms	200-1,000
HAW bottoms collection tank	1	HAW bottoms	600
HAW cement head tank	2	HAW bottoms	30
HAW condensate hold tank	1	HAW overheads	4,500
LAW head tank	1	Unprocessed waste	5,500
LAW evaporator	1	LAW bottoms	200-1,000
LAW bottoms collection tank	1	LAW bottoms	600
LAW cement head tank	2	LAW bottoms	30
EHT	1	LAW overheads	6,000
Caustic storage tank	1	Sodium hydroxide (50 wt. %)	4,500
Acid storage tote	1	Nitric acid (50 wt. %)	Variable

2.12 FIGURES

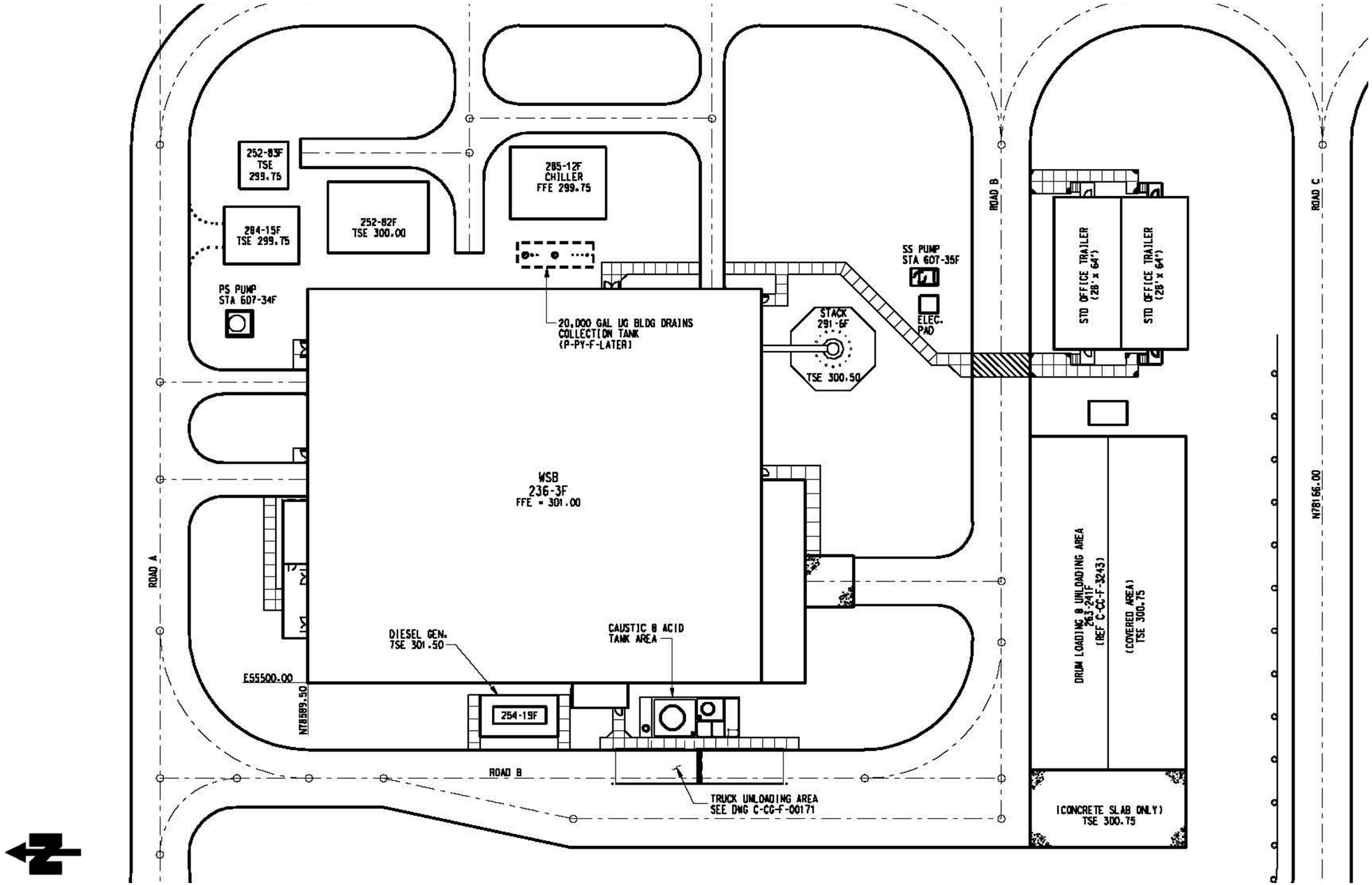

Figure 2.3-1 Waste Solidification Building Site Plan

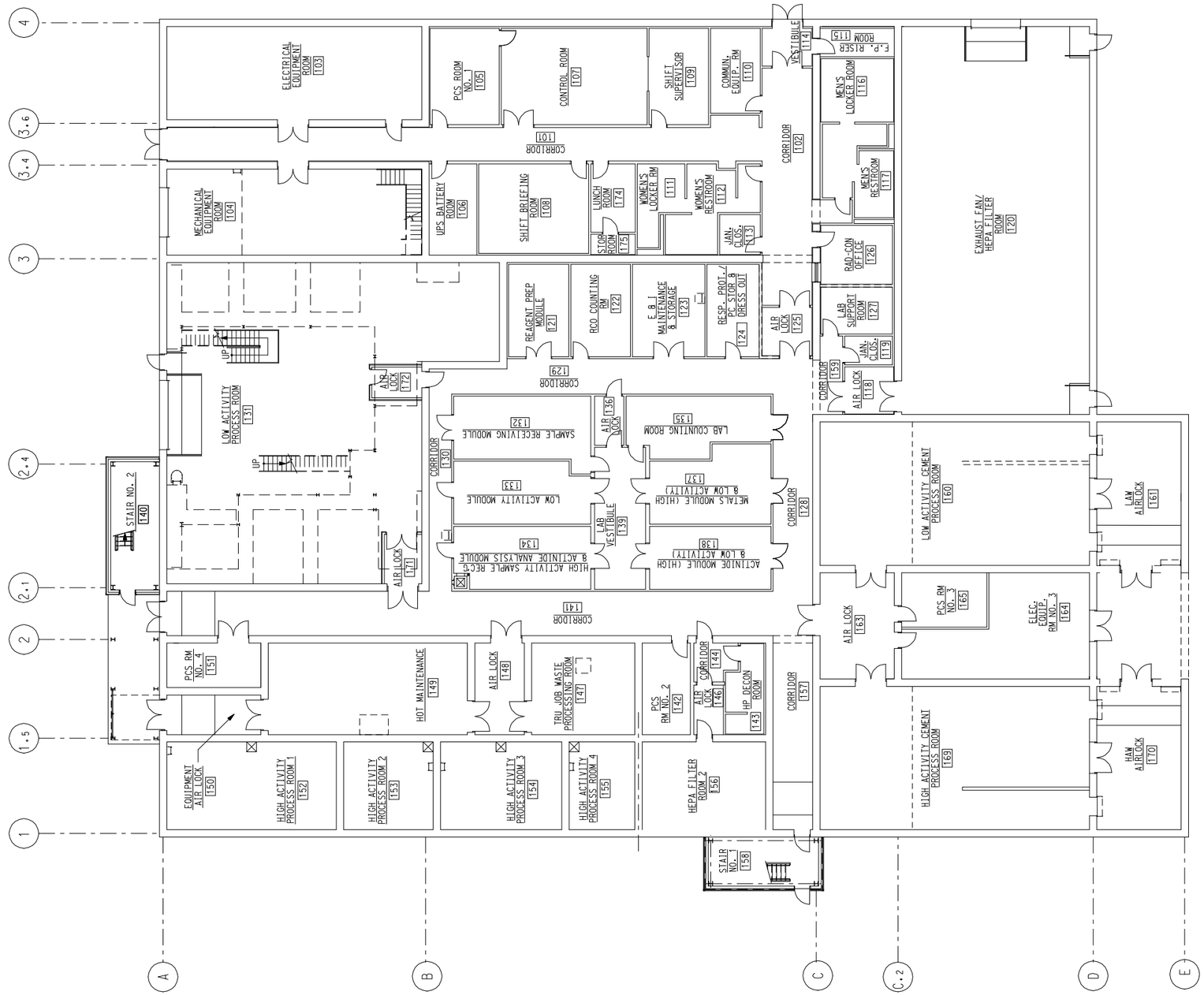

Figure 2.3-2 Waste Solidification Building First Level Floor Plan

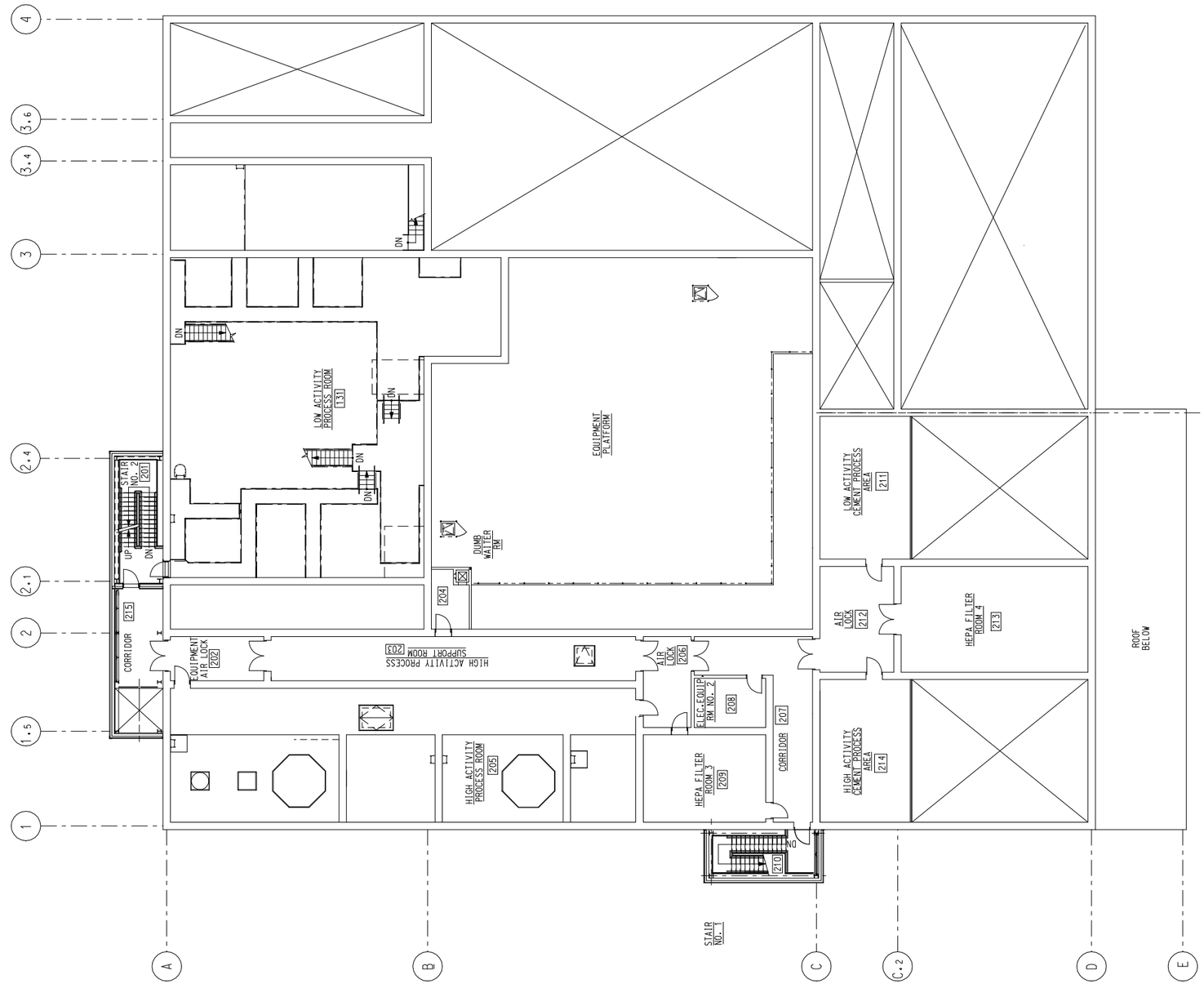

Figure 2.3-3 Waste Solidification Building Second Level Floor Plan

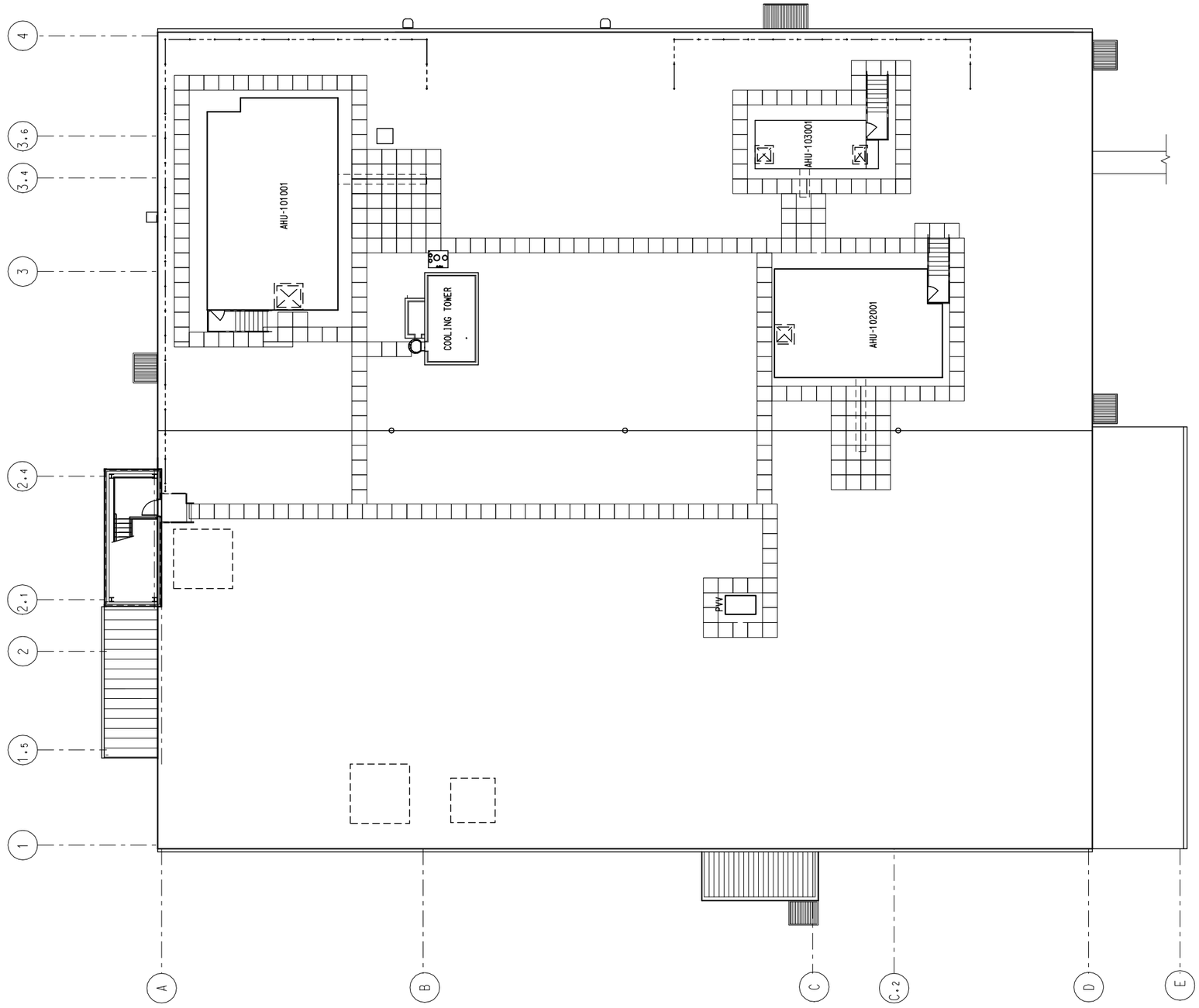

Figure 2.3-4 Waste Solidification Building Roof Floor Plan

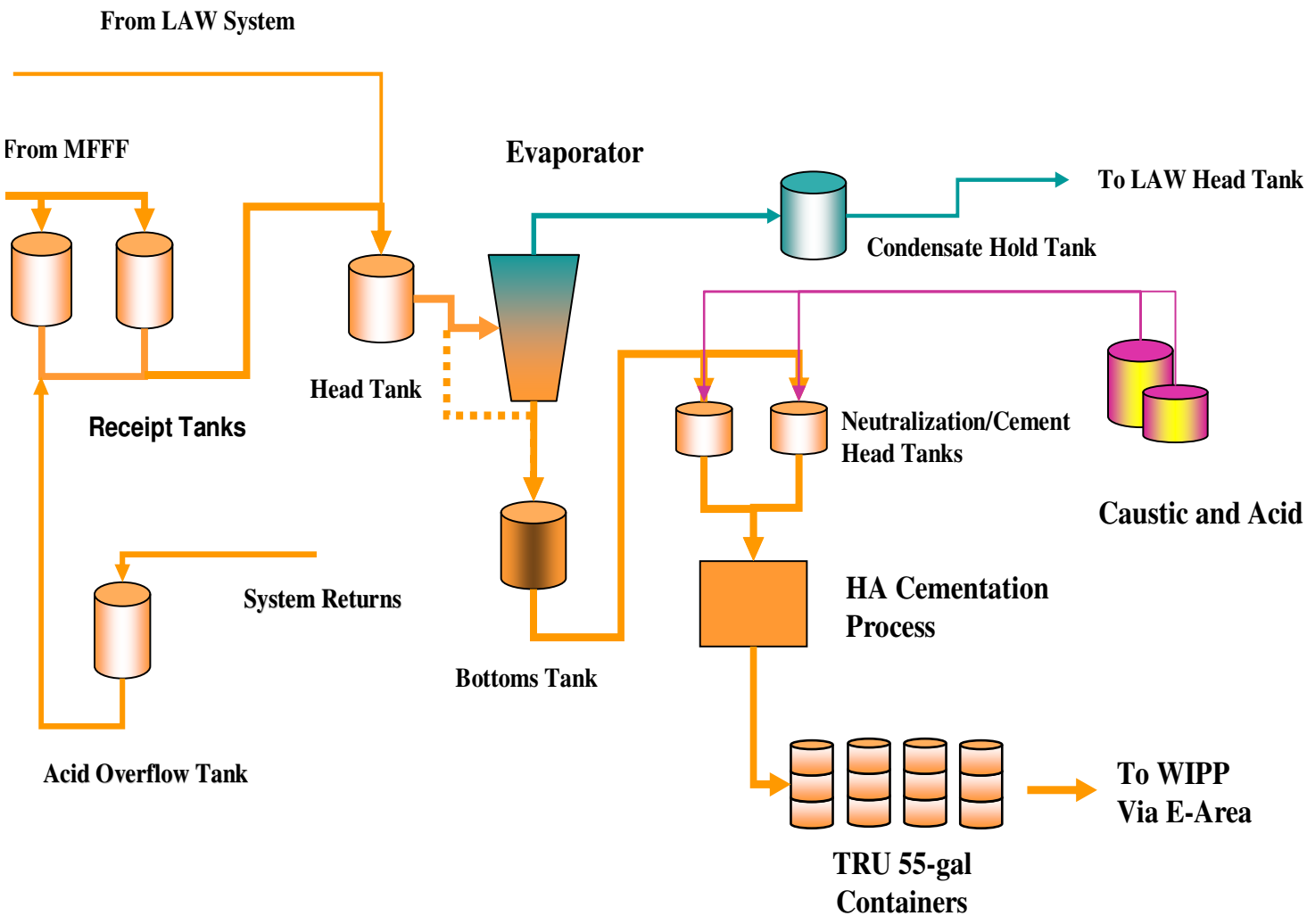

Figure 2.5-1 Waste Solidification Building High Activity Waste Process Flow Diagram

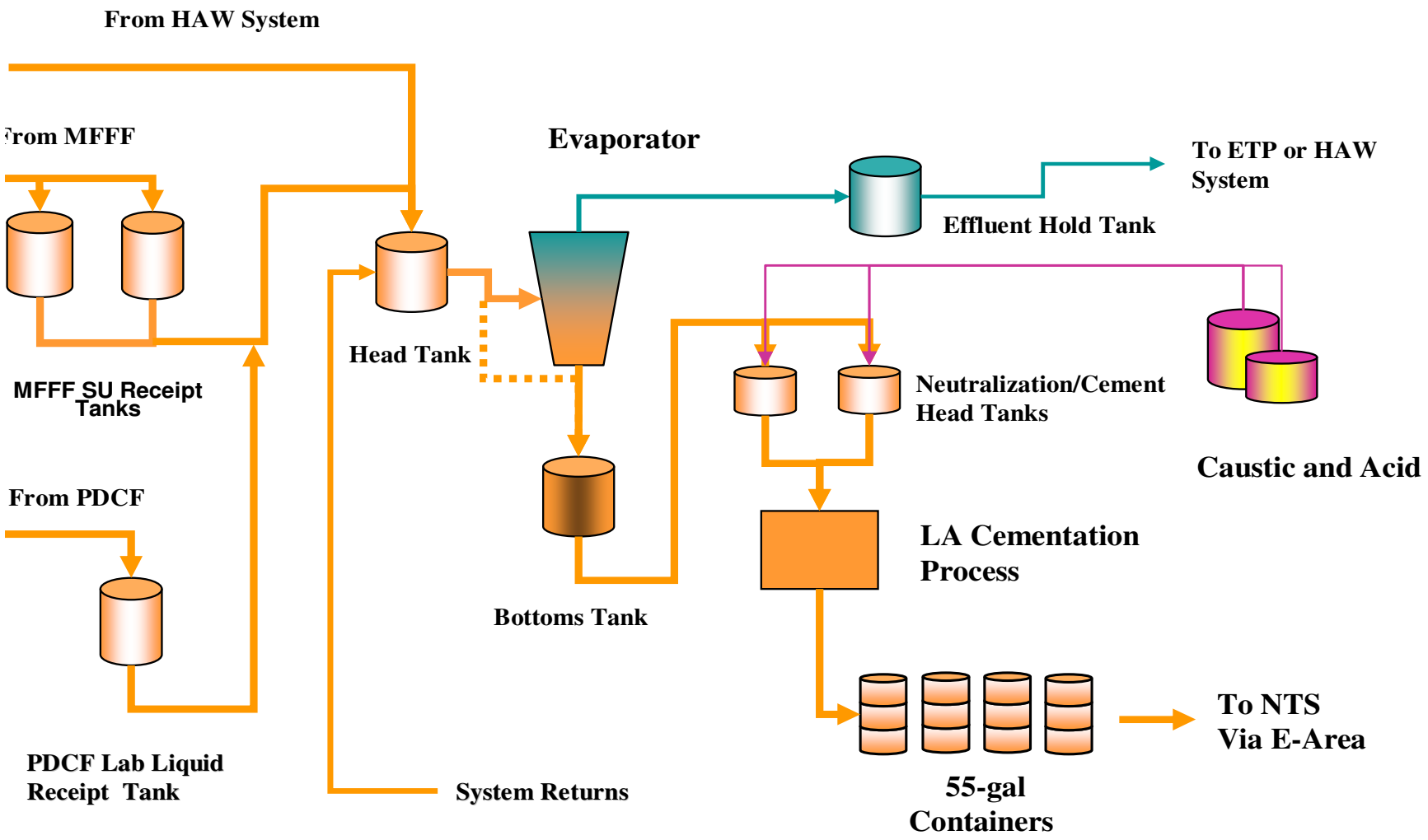

Figure 2.5-2 Waste Solidification Building Low Activity Waste Process Flow Diagram

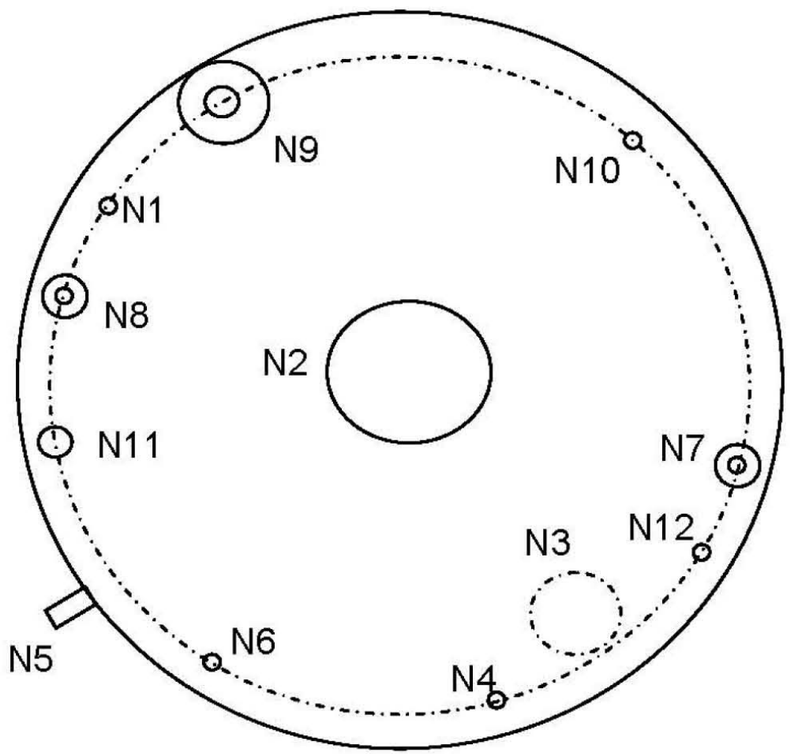

N1	2″	Inlet
N2	24″	Agitator
N3	1″	Pump Vent
N4	1″	Pump Out
N5	3″	Overflow
N6	2″	PVV Air Out
N7	4″	Density/Level
N8	2″	Spare
N9	6″	Spare
N10	2″	PVV Air In
N11	2″	Service Water
N12	1″	Pump Air In

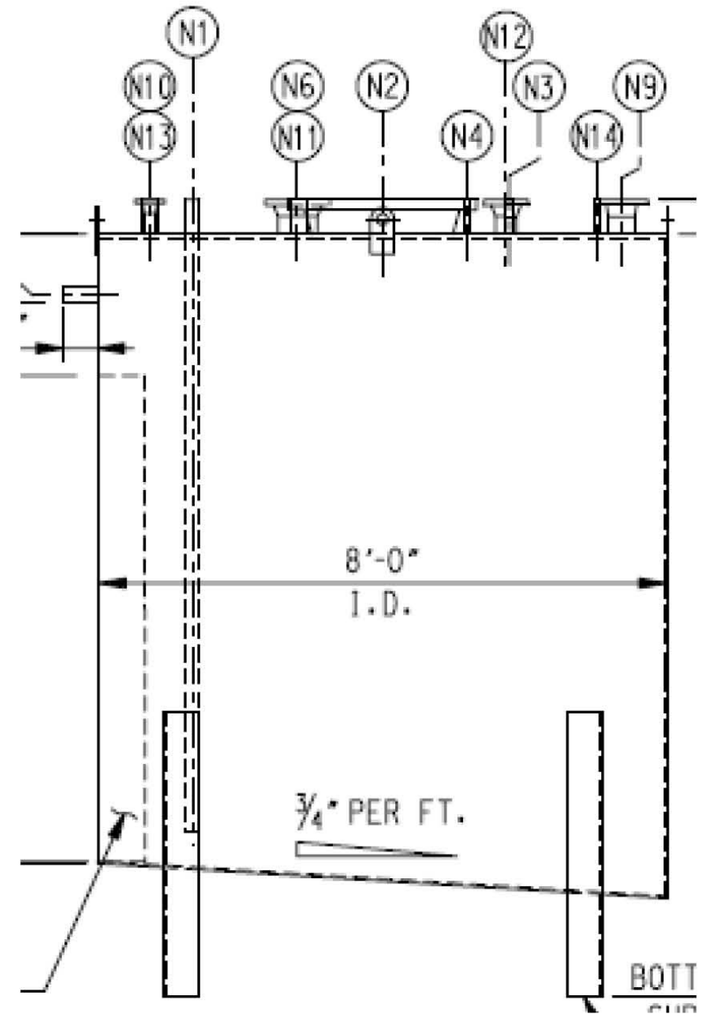

Figure 2.6-1 Typical High Activity Waste Vessel Arrangement

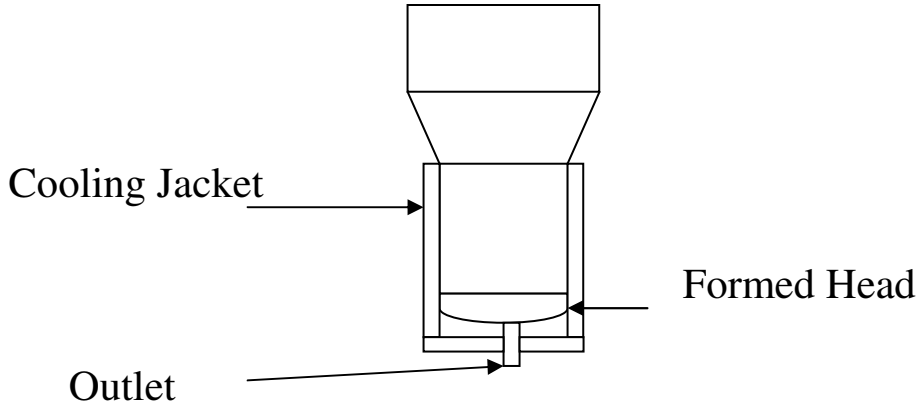

Figure 2.6-2 High Activity Waste Cement Head Tank

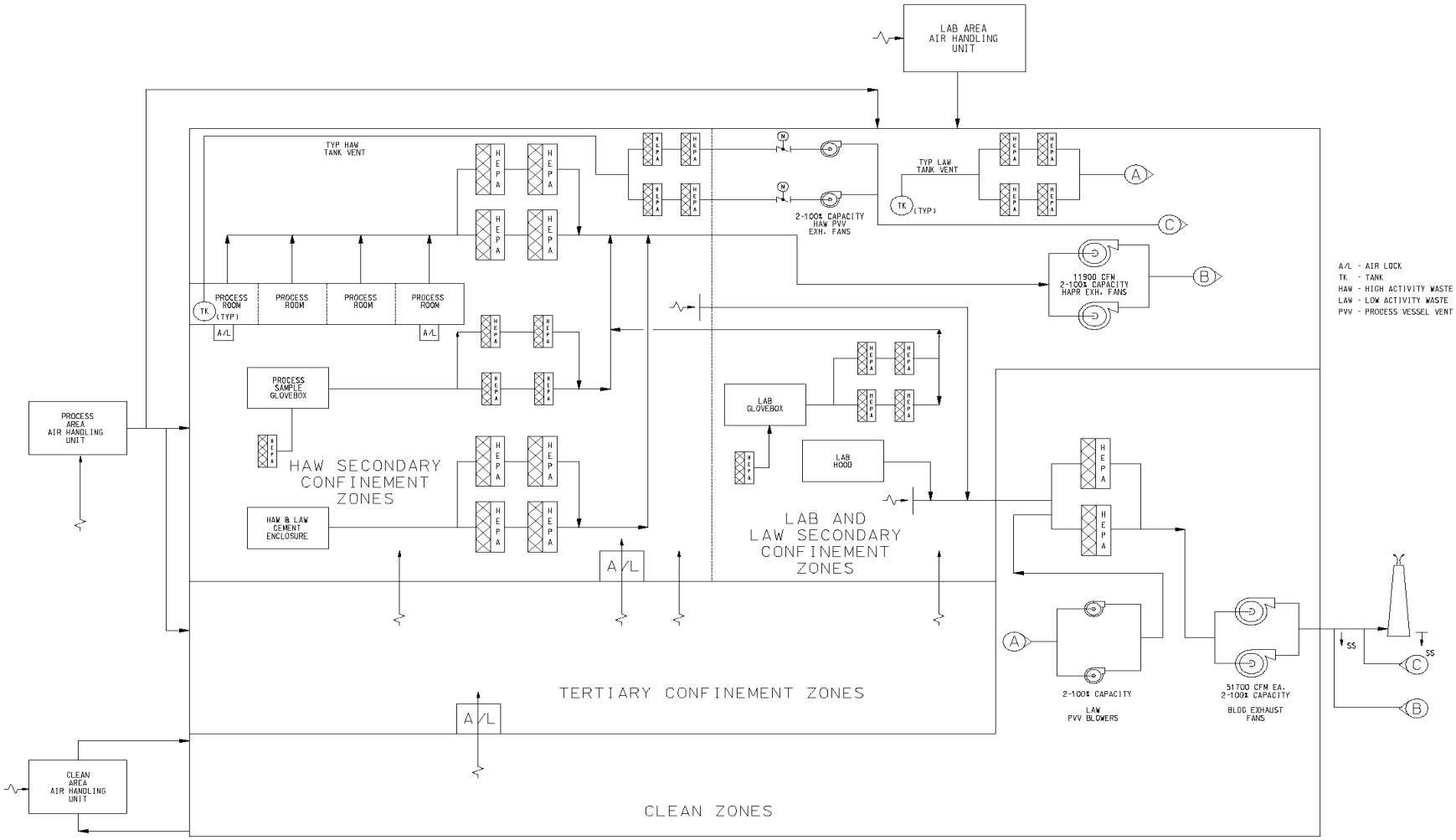

Figure 2.6-3 Waste Solidification Building Ventilation Concept

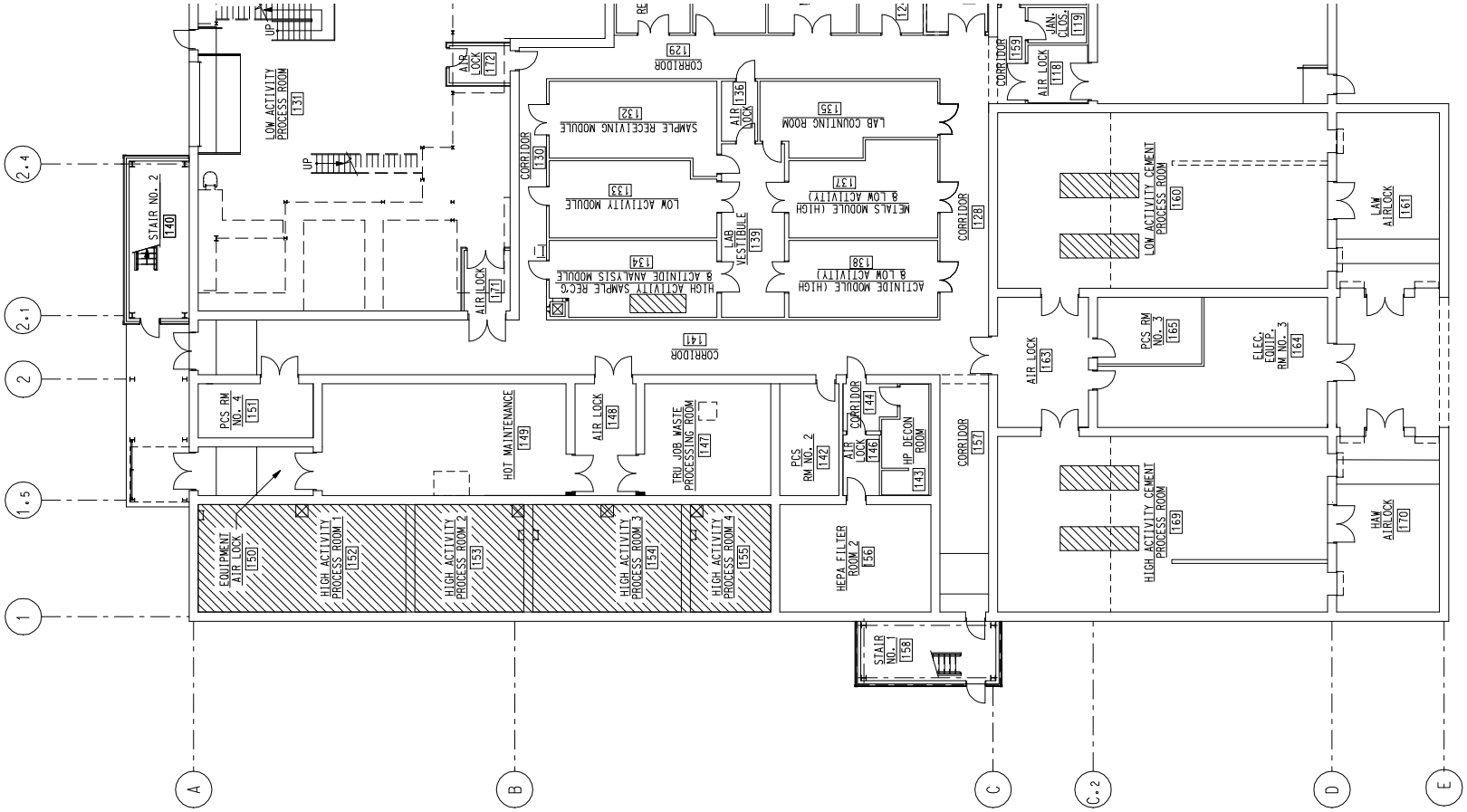

Figure 2.6-4 High Activity Waste Process Room Ventilation Area (First Level)

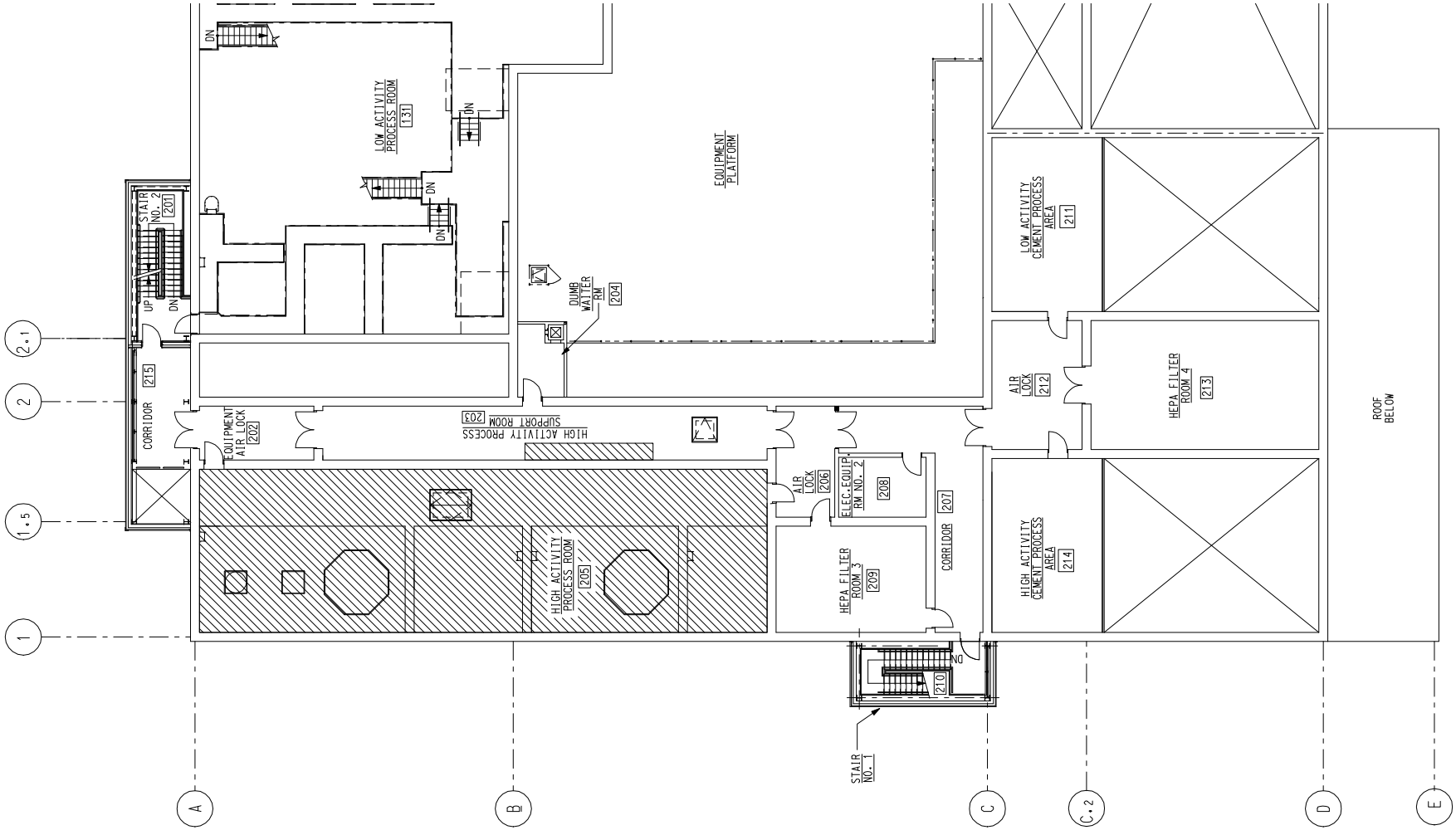

Figure 2.6-5 High Activity Waste Process Room Ventilation Area (Second Level)

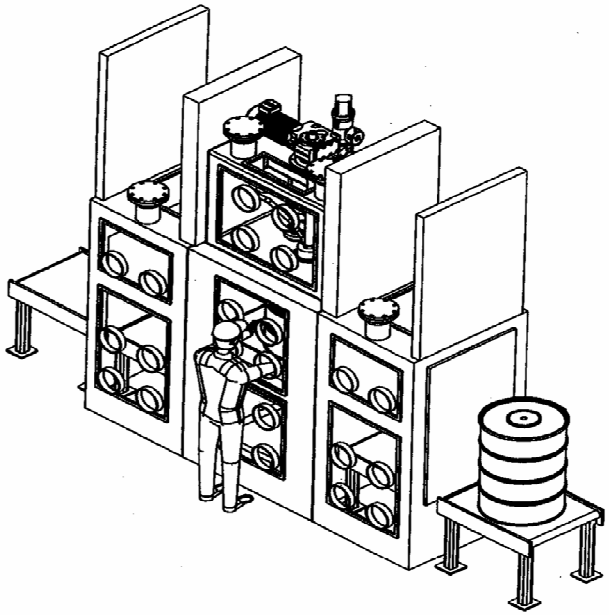

Figure 2.6-5 Drum Mixing Unit

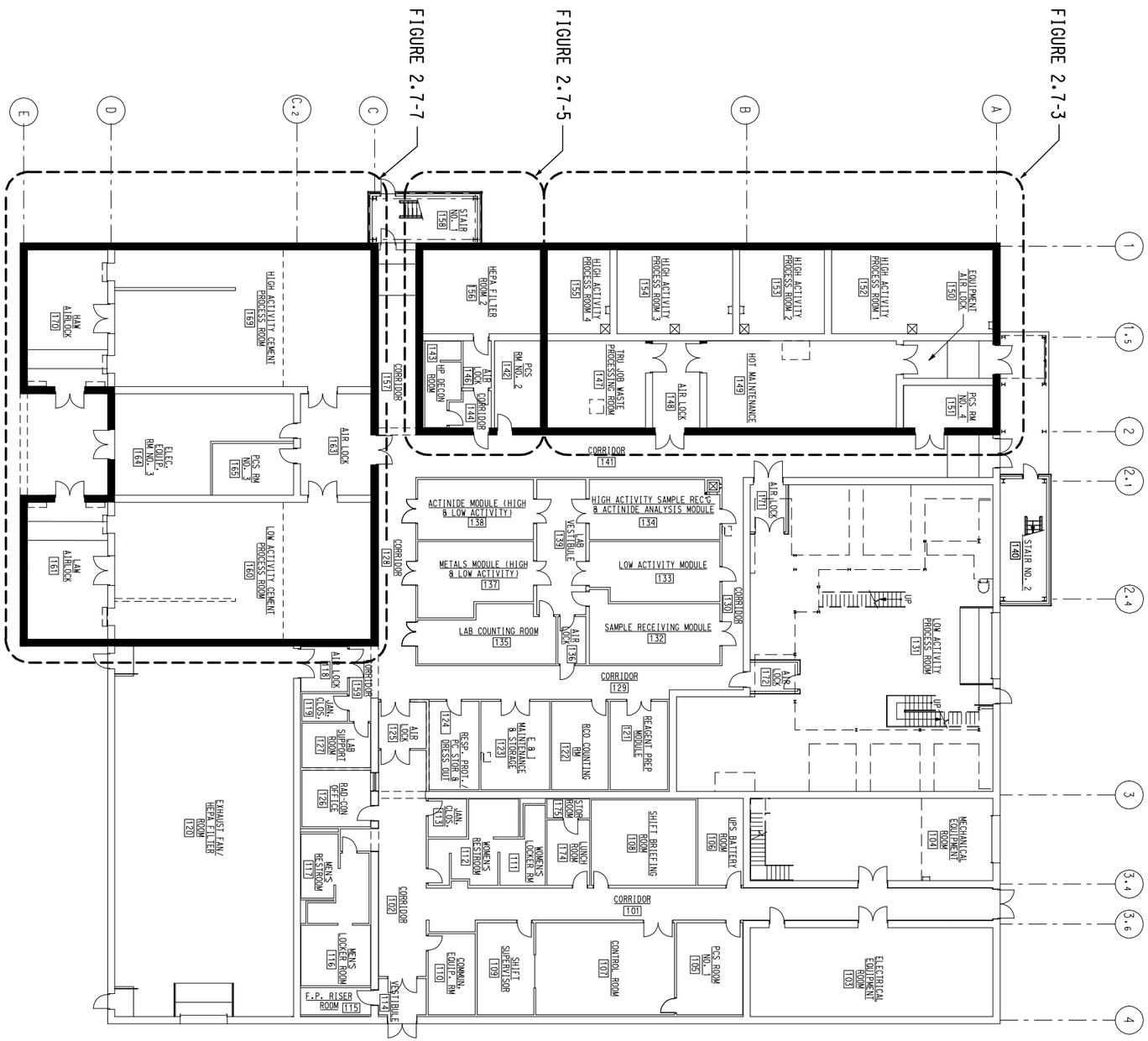

Figure 2.7-1 Waste Solidification Building First Level Fire Arrangement

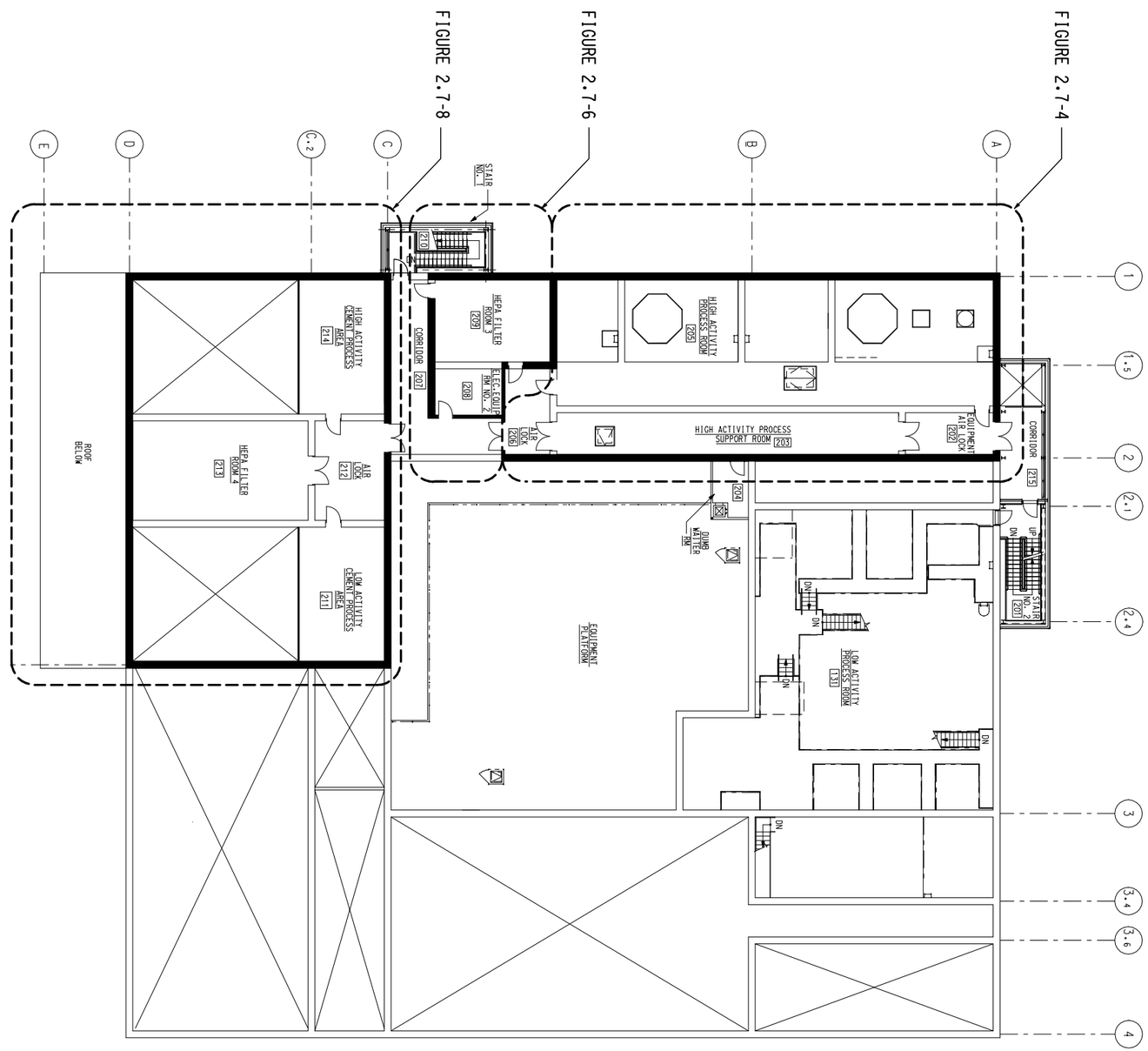

Figure 2.7-2 Waste Solidification Building Second Level Fire Arrangement

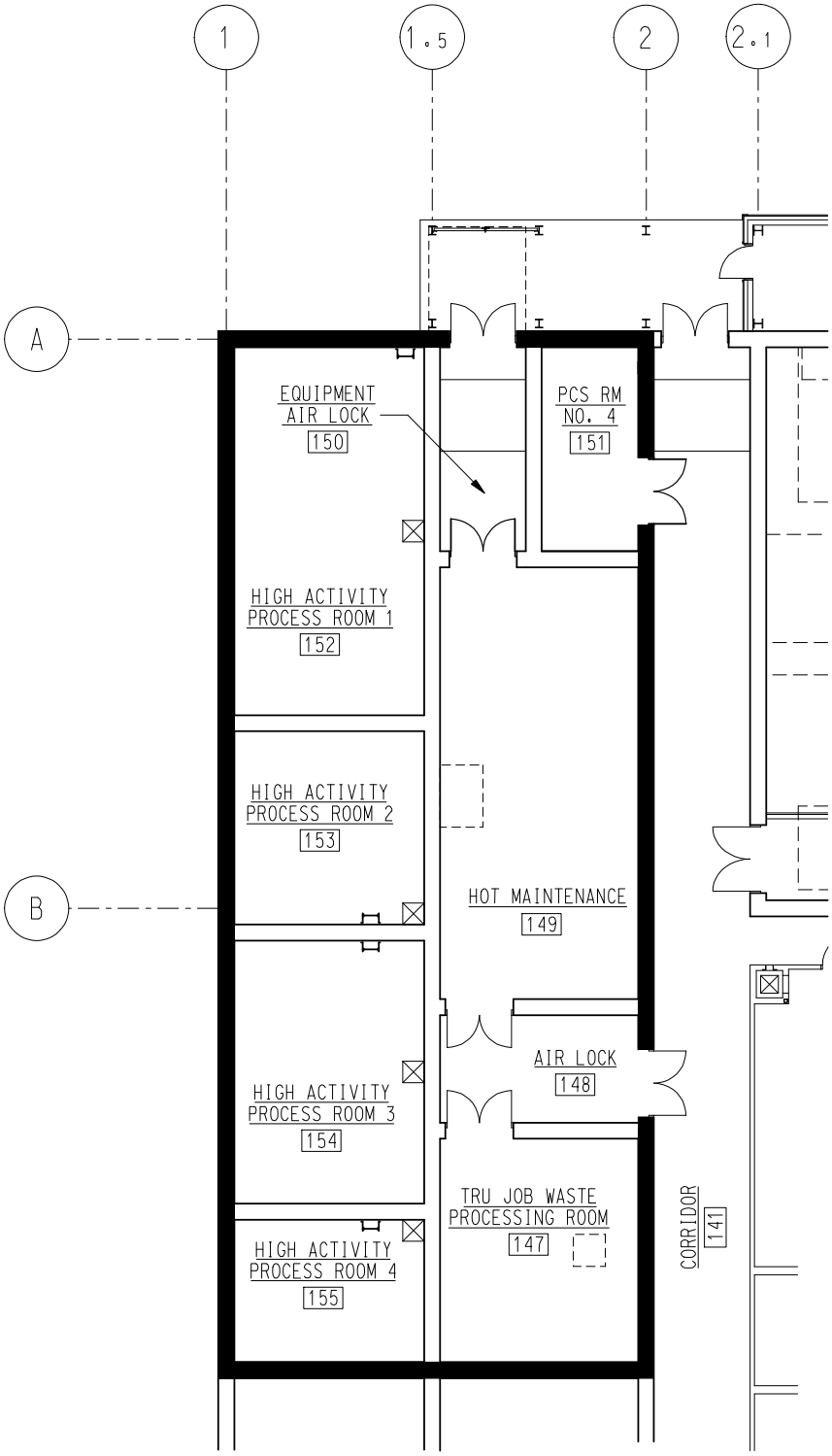

Figure 2.7-3 High Activity Waste Area Fire Barriers (First Level)

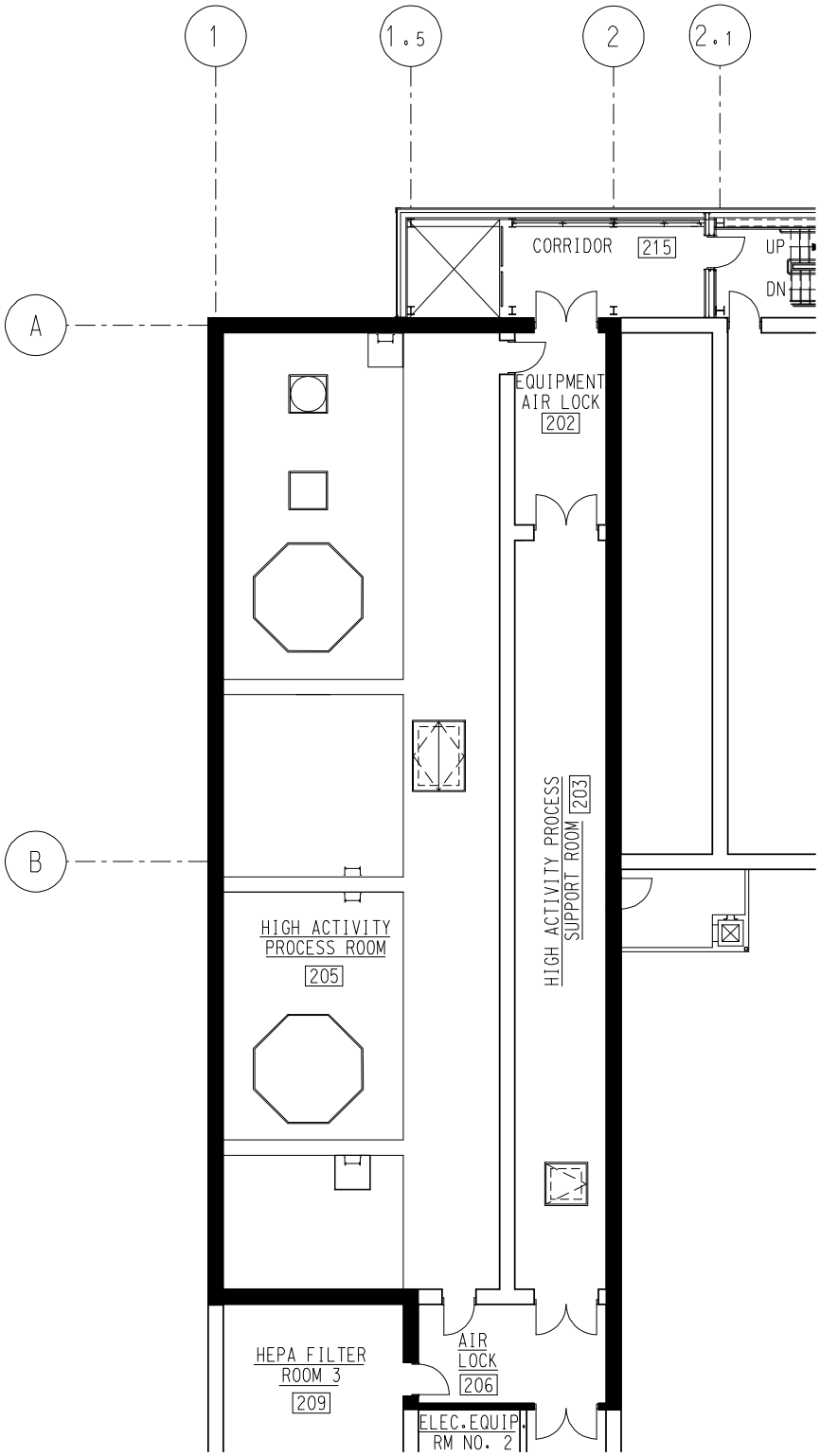

Figure 2.7-4 High Activity Waste Area Fire Barriers (Second Level)

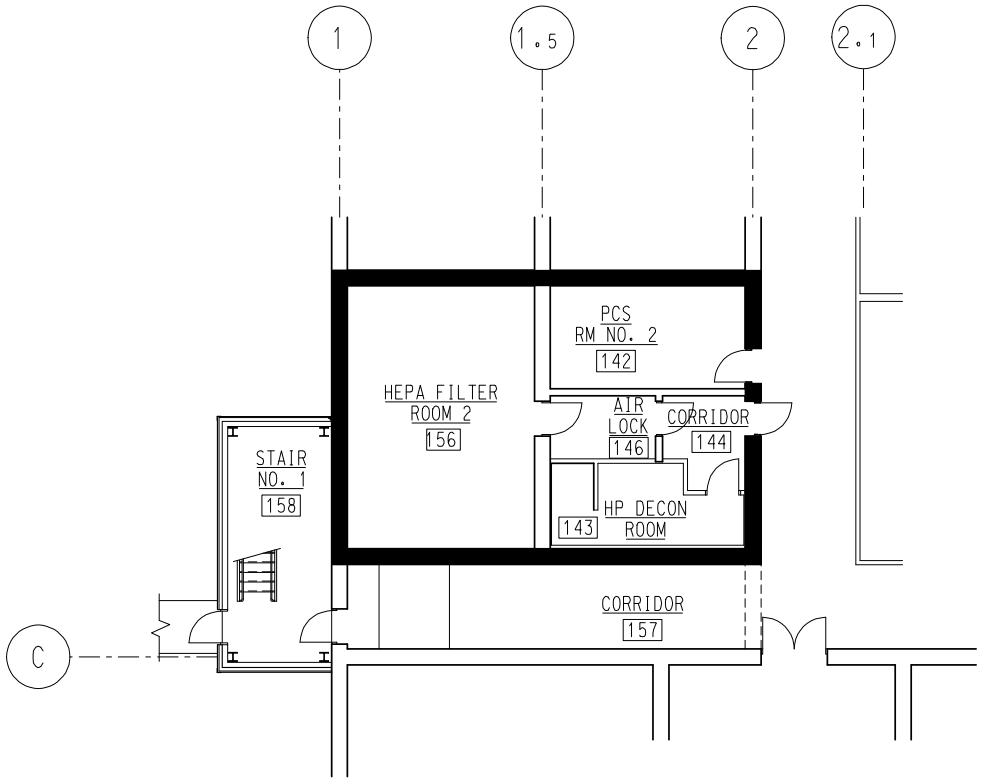

Figure 2.7-5 High Activity Waste Process Vessel Vent Room #1 Fire Barriers (First Level)

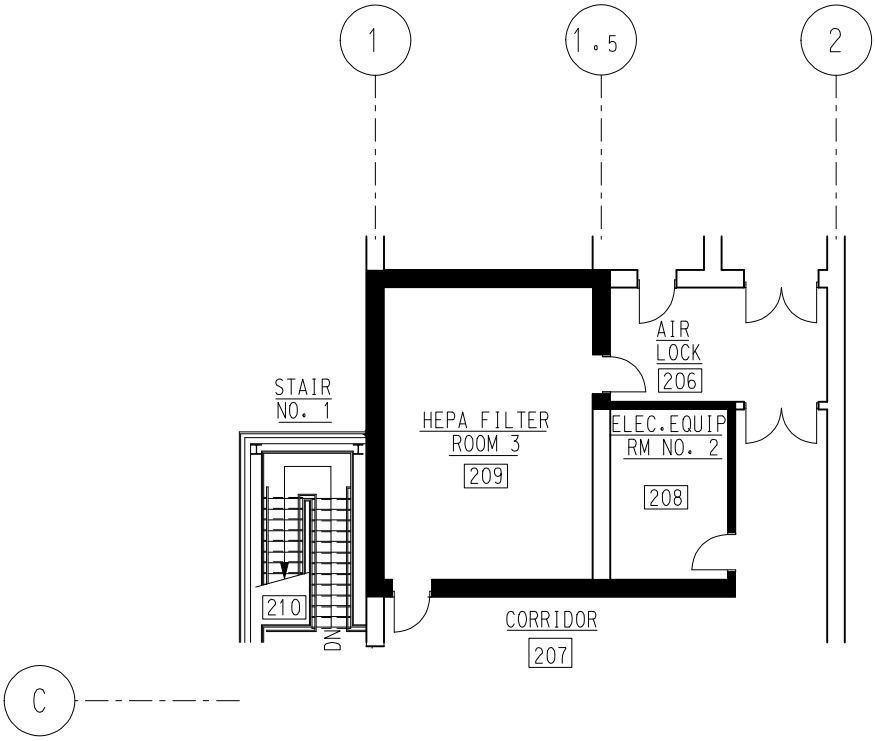

Figure 2.7-6 High Activity Waste Process Vessel Vent Room #2 Fire Barriers (Second Level)

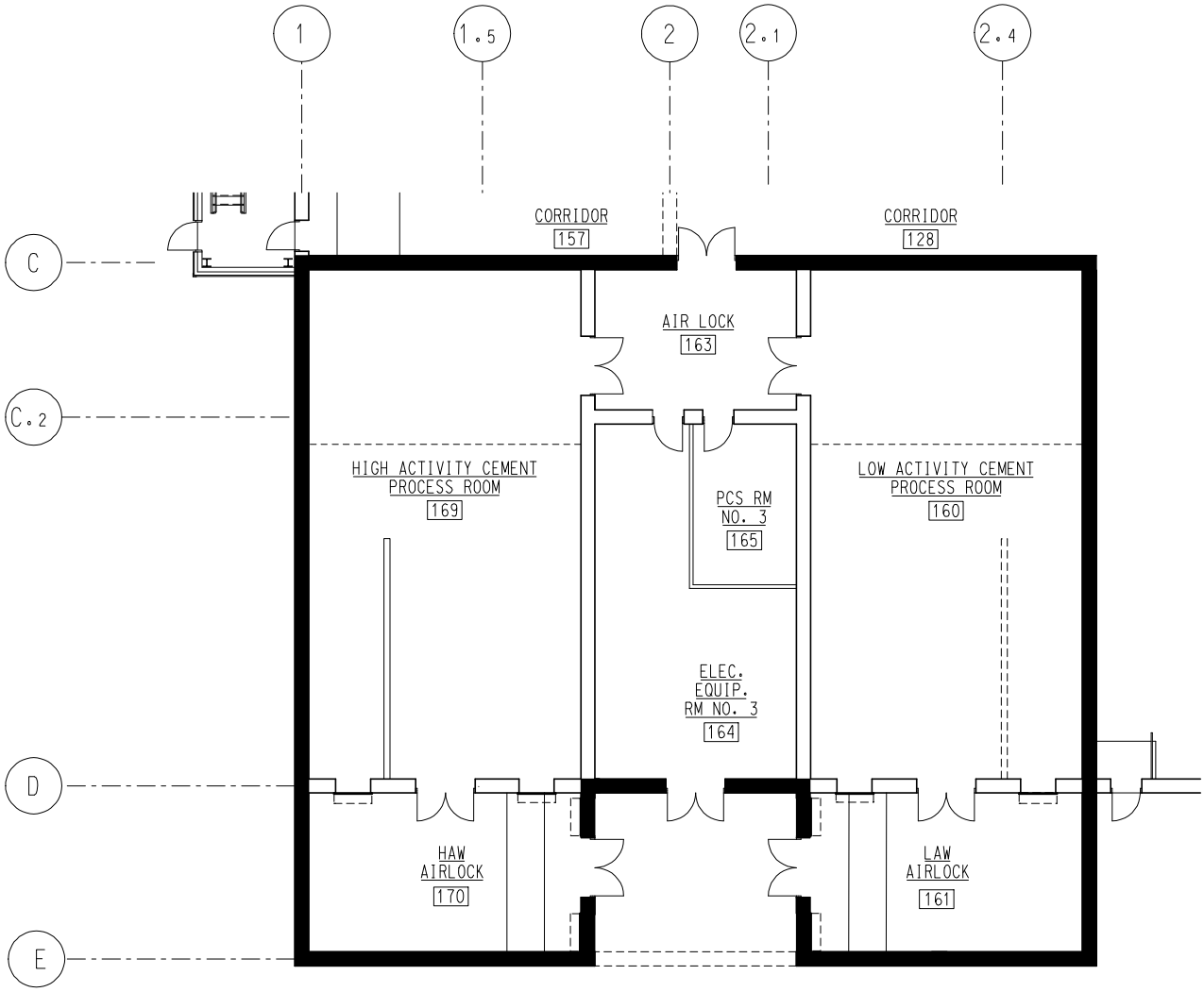

Figure 2.7-7 Cementation Area Fire Barriers (First Level)

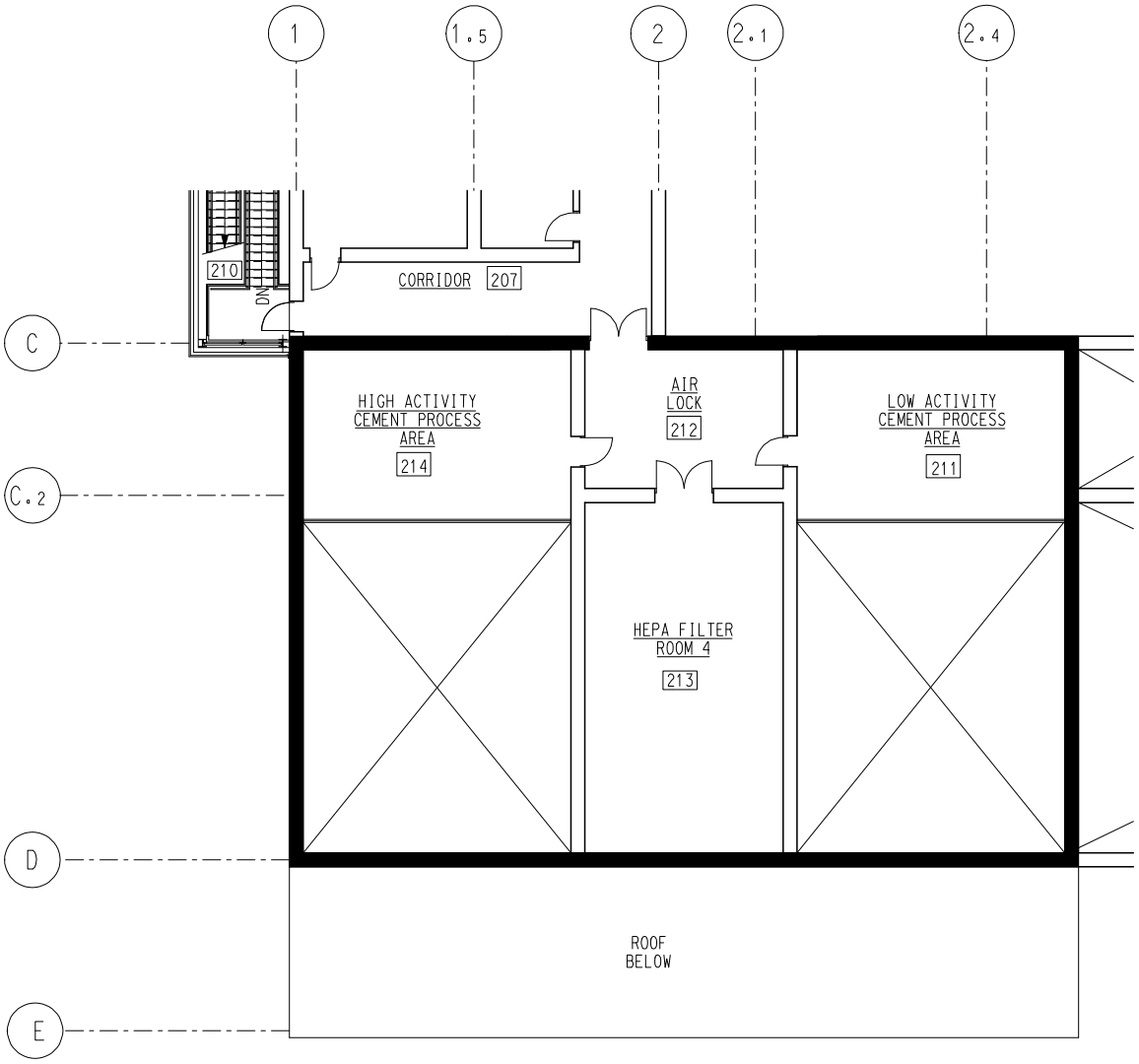

Figure 2.7-8 Cementation Area Fire Barriers (Second Level)

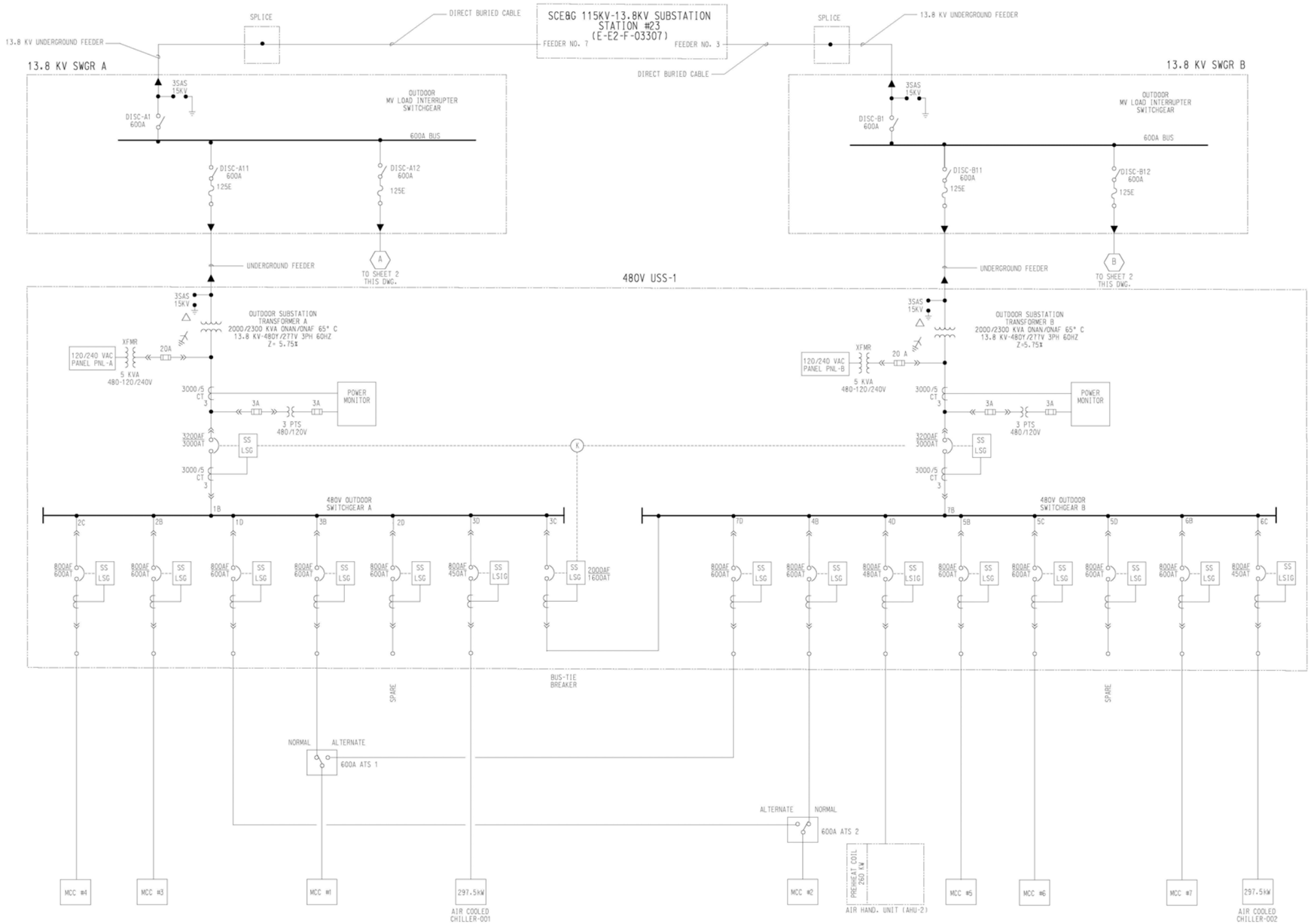

Figure 2.8-1 Waste Solidification Building Normal Electrical Power Distribution (Sheet 1 of 2)

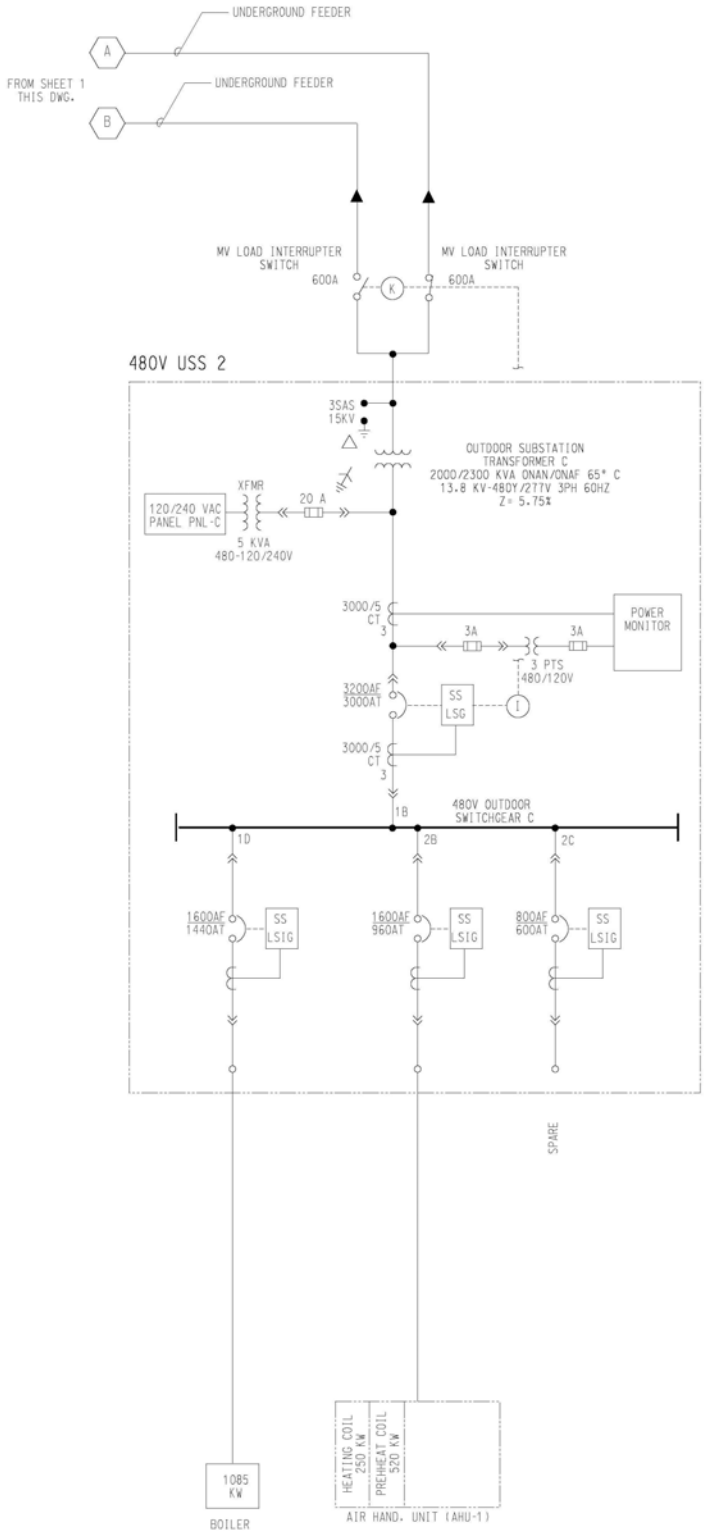

Figure 2.8-2 Waste Solidification Building Normal Electrical Power Distribution (Sheet 2 of 2)

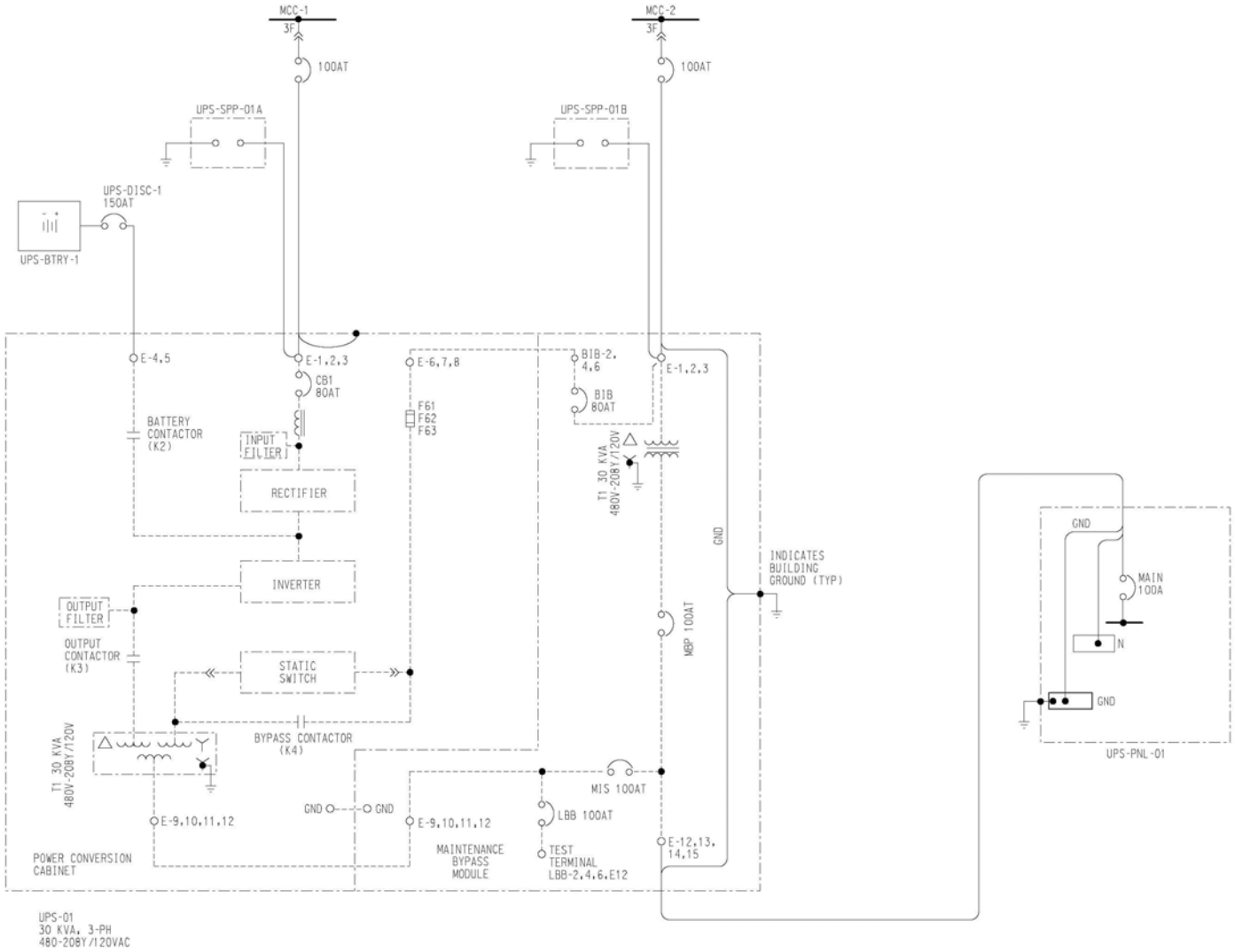

Figure 2.8-3 Waste Solidification Building Uninterruptible Power Source Electrical Power Distribution

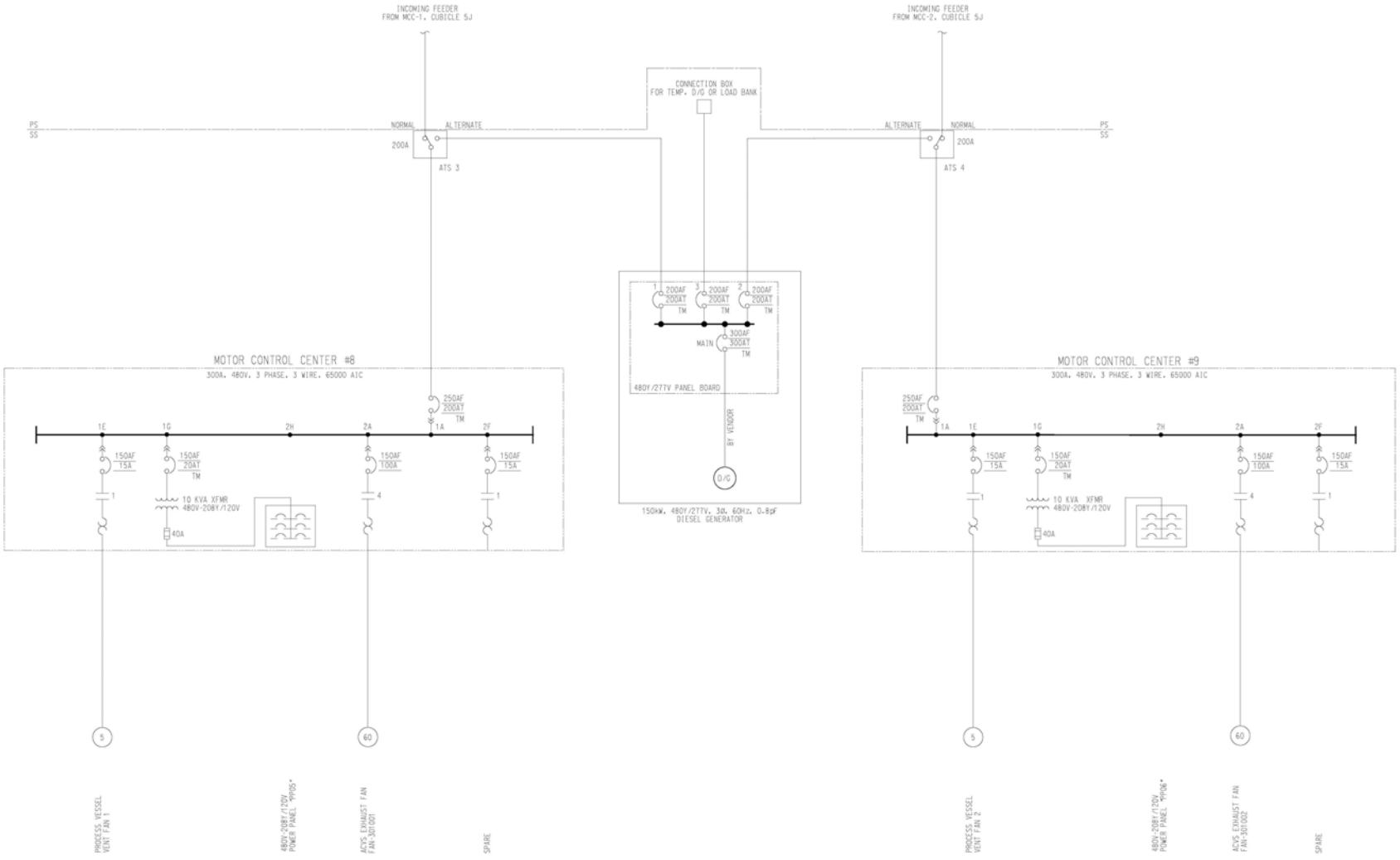

Figure 2.8-4 Waste Solidification Building Diesel Generator Electrical Power Distribution

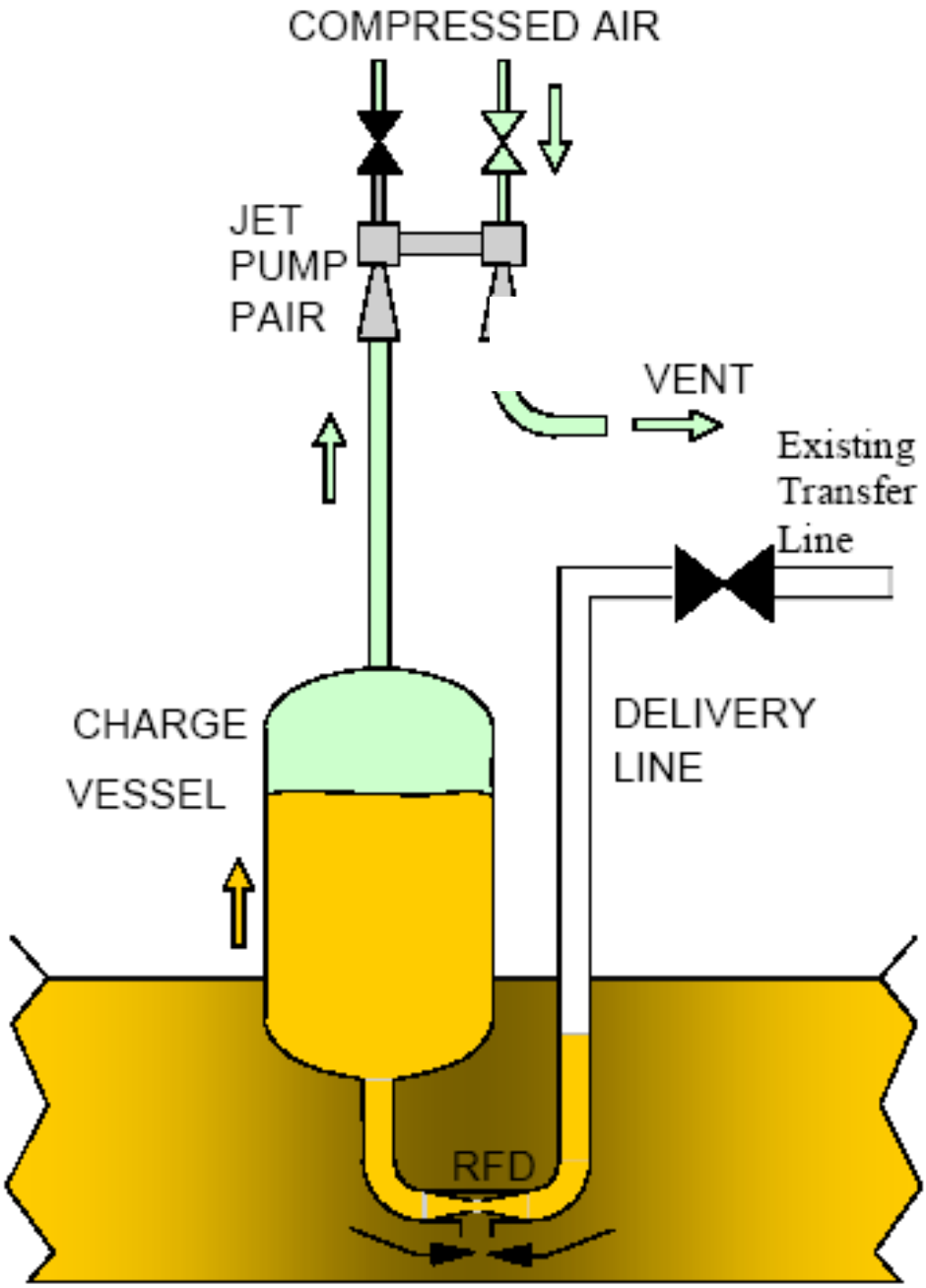

Figure 2.9-1 Fluidic Pumping System

WSRC-SA-2003-00002
Rev. 0

WASTE SOLIDIFICATION BUILDING PRELIMINARY DOCUMENTED SAFETY ANALYSIS

CHAPTER 3

HAZARD AND ACCIDENT ANALYSES

JULY 2008

UNCLASSIFIED

DOES NOT CONTAIN UNCLASSIFIED CONTROLLED NUCLEAR INFORMATION

DC &
Reviewing
Official: David Allison
WSMS

Basis: IG-SR-03, 02/04
Date: 5/06/08

SAVANNAH RIVER SITE
Aiken, SC 29808 · www.srs.gov

PREPARED FOR THE U.S. DEPARTMENT OF ENERGY UNDER CONTRACT NO. DE-AC09SR18500

DISCLAIMER

This document was prepared by Washington Safety Management Solutions LLC (WSMS), under contract with Washington Savannah River Company (WSRC), subject to the warranty and other obligations of that contract and in furtherance of WSRC's contract with the United States Department of Energy (DOE).

Release to and Use by Third Parties. As it pertains to releases of this document to third parties, and the use of or reference to this document by such third parties in whole or in part, neither WSMS, WSRC, DOE, nor their respective officers, directors, employees, agents, consultants or personal services contractors (i) make any warranty, expressed or implied, (ii) assume any legal liability or responsibility for the accuracy, completeness, or usefulness, of any information, apparatus, product or process disclosed herein or (iii) represent that use of the same will not infringe privately owned rights. Reference herein to any specific commercial product, process, or service by trademark, name, manufacture or otherwise, does not necessarily constitute or imply endorsement, recommendation, or favoring of the same by WSMS, WSRC, DOE or their respective officers, directors, employees, agents, consultants or personal services contractors. The views and opinions of the authors expressed herein do not necessarily state or reflect those of the United States Government or any agency thereof.

CONTENTS

Page

3.0 HAZARD AND ACCIDENT ANALYSIS 3.1-1

3.1 INTRODUCTION 3.1-1

3.2 REQUIREMENTS 3.2-1

3.3 HAZARDS ANALYSIS 3.3-1

3.3.1 Hazards Analysis Methodology 3.3-1

3.3.1.1 Hazard Identification 3.3-2

3.3.1.2 Hazard Categorization 3.3-5

3.3.1.3 Hazard Evaluation 3.3-6

3.3.2 Hazards Analysis Results 3.3-12

3.3.2.1 Hazard Identification 3.3-12

3.3.2.2 Hazard Categorization 3.3-20

3.3.2.3 Hazard Evaluation 3.3-21

3.3.3 Environmental Protection 3.3-44

3.3.4 Accident Selection 3.3-45

3.4 ACCIDENT ANALYSIS 3.4-1

3.4.1 Accident Safety Analysis Methodologies 3.4-1

3.4.1.1 Scenario and Source Term Development 3.4-1

3.4.1.2 Leak Path Factor 3.4-3

3.4.1.3 Natural Phenomena Hazards and External Hazards 3.4-3

3.4.1.4 Consequence Analysis 3.4-3

3.4.1.5 Waste Solidification Building Major Inputs and Assumptions 3.4-6

CONTENTS (continued)

Page

3.4.2 Design Basis Accidents 3.4-7

3.4.2.1 Operational Fires 3.4-7

3.4.2.2 Operational Explosions 3.4-11

3.4.2.3 Operational Spills 3.4-15

3.4.2.4 Man-Made External Fire/Spill Accidents 3.4-17

3.4.2.5 Natural Phenomena Hazards 3.4-19

3.4.3 Beyond Design Basis Accidents 3.4-24

3.4.3.1 Beyond Design Basis Seismic Accident 3.4-25

3.4.3.2 Beyond Design Basis Explosion Accident 3.4-27

3.5 REFERENCES 3.5-1

3.6 TABLES 3.6-1

3.7 FIGURES 3.7-1

APPENDIX A HAZARD EVALUATION TABLES 3A-1

TABLES

Page

Table 3.3-1 Waste Solidification Building Control Set 3.6-1

Table 3.3-2 Frequency Evaluation Levels 3.6-10

Table 3.3-3 Consequence Evaluation Levels for Hazard Receptors 3.6-11

Table 3.3-4 Consequence Related Controls Selection Criteria Matrix 3.6-12

Table 3.3-5 WSB Radiological Inventories 3.6-13

Table 3.3-6 Worker Safety Events 3.6-14

Table 3.3-7 Low Risk CHAP Events 3.6-15

Table 3.3-8 Accident Selection 3.6-17

Table 3.3-9 MFFF High Activity Waste 3.6-18

Table 3.3-10 MFFF LAW (Stripped Uranium) 3.6-21

Table 3.3-11 Bulk Storage Inventory 3.6-24

Table 3.3-12 Laboratory Area Inventory 3.6-25

Table 3.3-13 Estimated Site Boundary and Co-located Worker Chemical Consequences .. 3.6-31

FIGURES

Figure 3.3-1 Aircraft Crash Reduced Footprint Area 3.7-1

ACRONYMS

AC	Administrative Control
ANSI	American National Standards Institute
ARF	Airborne Release Fraction
ARR	Airborne Release Rate
BDBA	Beyond Design Basis Accident
BEU	Beyond Extremely Unlikely
CFR	Code of Federal Regulations
CHA	Consolidated Hazards Analysis
CHAP	Consolidated Hazards Analysis Process
CW	Co-located Worker
DBA	Design Basis Accident
DF	Design Feature
DID	Defense-in-Depth
DOE	U.S. Department of Energy
DOT	U.S. Department of Transportation
DR	Damage Ratio
DSA	Documented Safety Analysis
EDE	Effective Dose Equivalent
EG	Evaluation Guideline
EIS	Environmental Impact Statement
ERPG	Emergency Response Planning Guideline
FW	Facility Worker
HAW	High Activity Waste
HC	Hazard Category
HEPA	High Efficiency Particulate Air
I&A	Input and Assumption
IEEE	Institute of Electrical and Electronics Engineers
kg	kilograms
LAW	Low Activity Waste
LCO	Limiting Condition for Operation
LFL	Lower Flammability Limit
LOC	Level of Control
LPF	Leak Path Factor
MACCS2	Melcor Accident Consequence Code System 2
MAR	Material at Risk

ACRONYMS (continued)

MFFF	MixedOxide Fuel Fabrication Facility
mg/l	milligrams per liter
MOI	Maximally-Exposed Offsite Individual
NFPA	National Fire Protection Association
NPH	Natural Phenomena Hazard
OSHA	Occupational Safety and Health Administration
PC	Performance Category
PDCF	Pit Disassembly and Conversion Facility
PDSA	Preliminary Documented Safety Analysis
PEC	Plutonium-239 Equivalent Curies
PPE	Personnel Protective Equipment
psig	Pound per Square Inch, Gauge
PVVS	Process Vessel Vent System
rem	Roentgen Equivalent Man
RF	Respirable Fraction
RQ	Reportable Quantity
SAC	Specific Administrative Control
SIH	Standard Industrial Hazard
SIL	Safety Integrity Level
SRS	Savannah River Site
SSC	Structure, System, and Component
ST	Source Term
TBP	Tributyl Phosphate
TEDE	Total Effective Dose Equivalent
TNT	Tri Nitro Toluene
TPQ	Threshold Planning Quantity
TQ	Threshold Quantity
TRU	Transuranic
TSR	Technical Safety Requirement
WAC	Waste Acceptance Criteria
WACP	Waste Acceptance Criteria Program
WG	Worker Group
WSB	Waste Solidification Building
WSRC	Washington Savannah River Company
wt. %	weight percent

3.0 HAZARD AND ACCIDENT ANALYSIS

3.1 INTRODUCTION

This chapter of the Preliminary Documented Safety Analysis (PDSA) for the Waste Solidification Building (WSB) at the Savannah River Site (SRS) provides an assessment of hazards associated with the operation of the WSB. The hazards are evaluated to determine the potential for the identified hazards to develop into process-related, external, and Natural Phenomena Hazard (NPH) events. The hazard analysis handles the following:

- Systematically identifies and assesses the hazards that are present within the facility
- Evaluates the potential for hazards to develop into hazardous events
- Considers the complete spectrum of hazardous events that may occur due to facility operations (under both normal and abnormal conditions), external events, and natural phenomena
- Identifies a selected subset of hazardous events, designated as Design Basis Accidents (DBAs) and Beyond Design Basis Accidents (BDBAs), to be quantitatively analyzed in the accident analysis
- Identifies the controls within the facility that form the basis for Defense-In-Depth (DID) against adverse consequences to the workers and public from hazardous events

Following the selection of the DBAs and BDBAs, accident analyses are performed to evaluate these accidents to determine their effect on the offsite public and for comparison with Evaluation Guidelines (EGs) to assess the adequacy of Safety Class Structures, Systems, and Components (SSCs) and Specific Administrative Controls (SACs) and general Administrative Control (AC) programs, as appropriate.

The U.S. Department of Energy (DOE) regulations prescribe the use of a graded approach for the effort expended in safety analysis and the level of detail presented in associated documentation. The graded approach adjusts the magnitude of the preparation effort to the characteristics of the WSB, commensurate with the following:

- The relative importance to safety, safeguards, and security
- The magnitude of the hazards involved
- The complexity of the process
- The facility's life-cycle stage
- The programmatic mission of the facility
- The relative importance of radiological and non-radiological hazards
- The particular characteristics of the facility
- Any other relative factor

To apply the graded approach, the analysis needs only to provide sufficient calculations to demonstrate that the EGs are not challenged. Once that is shown, additional quantitative analysis is not required. The graded approach requires a more rigorous and thoroughly documented assessment of complex, higher hazard facilities than simple, lower hazard facilities because grading is a function of both hazard potential and complexity.

The WSB contains Category 2 (Section 3.3.1.2 and Reference 1) quantities of radionuclides and is, therefore, considered a high hazard nuclear facility requiring the form of safety documentation and the level of approval at the highest level for non-reactor nuclear facilities (Ref. 1, 2, 3). Although it has been shown through consequence analysis that the offsite EG (25 roetgen equivalent man [rem], Ref. 2) is not challenged by the conservatively calculated, bounding accident consequence (7.3 rem for fire events, Reference 4), the consequences to the Co-located Worker (CW) are well over 100 rem (Ref. 5) for the bounding accident and, thereby, require Safety Significant controls (Ref. 3).

Derivation of Safety Significant worker protection controls requires only qualitative evaluation and does not warrent rigorus numerical analysis (Ref. 2). The robust design of the facility (exceeding Performance Category [PC] 3 NPH design specifications, Section 4.4.1), the safety-related worker protection control set (Table 3.3-1), and the Safety Integrity Level (SIL) of instrumentation for the primary energetic event engineered preventers (SIL-2 for the highest risk Process Vessel Vent System [PVVS] and evaporator steam interlock systems, Sections 4.4.4 and 4.4.7) are more than adequate to protect all workers. Also, the WSB activities can be considered "simple" in that the process does not require extensive operational training or numerous detailed procedures and requires only a few active Safety Significant controls. The form and approval level of the safety documentation, although at the highest level, does not necessitate the detailed content of a more complex facility with Safety Class controls (Ref. 2). In addition, due to the pre-operational design stage of the facility, detailed operational and procedural development has not been completed and, therefore, a fully developed safety document and Technical Safety Requirements (TSR) are not possible at this time.

As part of the safety analysis, a hazard analysis is required for the WSB to comprehensively identify and characterize all known hazards and evaluate them in terms of actual facility operations to assess the potential risk. The hazard analysis provides a basis for the hazard categorization, which in turn determines the level of safety documentation required for the facility and the level of review and approval required for the safety documentation.

This chapter includes the results of hazard categorization, hazard identification, hazard evaluation, accident analysis, and functional classification. Items discussed include the following:

- Methodology for hazard analysis and accident analysis
- Identification of hazardous energy sources and hazardous material sources
- Radiological and chemical inventories
- Facility hazard categorization

- Risk binning evaluation of identified hazardous events based on a qualitative or semi-quantitative assessment of consequences and frequency
- Summary of design and operational preventive and mitigative features
- Identification of planned design and operational safety improvements
- Summary of controls, including identification of Safety Class/Safety Significant SSCs and SACs, and other items needing TSR coverage to protect the validity of assumptions and controls credited in the accident analysis
- Summary of significant worker safety features, including identification of Safety Significant SSCs and any relevant TSR ACs
- Identification of a limited set of unique and representative hazardous events, designated as DBAs, to be analyzed further
- Analysis of DBAs
- Evaluation and analysis of BDBAs (when required)
- Comparison of consequences to offsite EGs and onsite Evaluation Criteria

The primary purpose of the analysis is to demonstrate that the WSB can be operated without undue risk to onsite or offsite individuals or to the environment. The information contained within this chapter supports the conclusion that the facilities can be operated safely in conjunction with the controls described elsewhere in the PDSA.

3.2 REQUIREMENTS

The hazard analysis and accident analysis presented in this chapter have been specifically developed in accordance with requirements of the following codes, standards, regulations, DOE Orders, and Washington Savannah River Company (WSRC) manuals:

- DOE-STD-1027-92, Hazard Categorization and Accident Analysis Techniques for Compliance with DOE Order 5480.23, Nuclear Safety Analysis Reports (Ref. 1)
- DOE-STD-3009-94, Preparation Guide for U.S. Department of Energy Nonreactor Nuclear Facility Safety Analysis Reports (Ref. 2)
- Facility Safety Documentation Manual, WSRC Procedure Manual 11Q, "Appendix A – Safety Analysis Criteria" (Ref. 3)
- Consolidated Hazards Analysis Process (CHAP) Program and Method Manual, SCD-11 (Ref. 5)
- DOE-STD-1021-93, Natural Phenomena Hazards Performance Categorization Criteria for Structures, Systems, and Components (Ref. 6)
- Title 10, Code of Federal Regulations (CFR), Part 830, Nuclear Safety Management (Ref. 7)
- DOE-HDBK-3010-94, Airborne Release Fractions/Rates and Respirable Fractions for Non-Reactor Nuclear Facilities (Ref. 8)
- DOE Order 420.1B, Section 4.4, Facility Safety (Ref. 9)
- DOE-STD-1020-2002, Natural Phenomena Hazards Design and Evaluation Criteria for DOE Facilities (Ref. 10)
- Safety Documentation Integrated Work Process Procedure Manual, SCD-12 (Ref. 11)
- WSRC Nuclear Safety Criticality Manual, SCD-3 (Ref. 12)
- WSRC Conduct of Engineering and Technical Support Procedure Manual, E7 (Ref. 13)

3.3 HAZARDS ANALYSIS

This section describes the hazard analysis performed for the WSB. The hazard analysis is the initial evaluation effort and systematically presents an analysis of potential process-related, natural phenomena, and external hazards that can affect the public, site workers, and the environment due to single or multiple failures. This analysis considers the potential for both equipment failure and human error. The CHAP was utilized to perform the hazard analysis as prescribed in WSRC Procedure Manual SCD-11 (Ref. 5). The CHAP consists of multiple elements that utilize specific proven techniques and a team approach to assess facility hazards.

The hazard analysis provides a thorough, predominantly qualitative evaluation of the spectrum of risks to the public, site workers, and the environment due to accidents involving the identified hazards. It consists of three basic analytical activities: hazard identification, hazard categorization, and hazard evaluation. DOE-STD-3009-94 and the CHAP require that the hazard analysis comprehensively do the following (Ref. 2, 5):

- Identify hazards
- Screen for potential common industrial hazards
- Identify potential events, event initiators, and dominant scenarios
- Estimate their frequencies and consequences
- Identify preventive and mitigative controls
- Estimate mitigated frequencies and consequences
- Present the results in a risk matrix

Gross estimates of consequences and frequencies are performed in the hazard analysis (Ref. 4) such that attention is focused on those scenarios that are of the greatest concern (i.e., highest risk). The hazard analysis methodology represents the initial phase of the accident analysis.

3.3.1 HAZARDS ANALYSIS METHODOLOGY

This section presents the methodology used to identify and characterize hazards and to perform a systematic evaluation of basic hazardous events or accident scenarios. Systems and controls that could be expected to prevent the accident or mitigate the consequences of the accident to the public or the workers are identified during the process of evaluating the facility and identifying the hazardous events. Preventive and mitigative features identified at this stage of the safety documentation process are candidates for selection in the accident analysis and functional classification phases as credited SSCs providing a Safety Class or Safety Significant function.

3.3.1.1 Hazard Identification

Hazard identification is a comprehensive, systematic process by which known hazards (hazardous materials and energy) associated with the facility are identified, recorded, and

screened by a team of individuals representing the stakeholder organizations. Hazards are primarily identified through the development of lists of known hazardous energy and material sources and their locations. Information for identifying hazards and determining their applicability to the facility is obtained, as applicable, from the following sources:

- Existing project, safety, and environmental documents
- Design drawings and reviews
- Test plans and studies
- Consultations with facility, system, or process experts

The first step of hazard identification is facility information gathering. Facility information gathering includes both reviews of current design documentation and direct interactions with the designers responsible for the specific sections of the facility. The team performs information gathering to identify hazardous materials and energy sources that are currently known or that may be associated with each facility hazard analysis section. The team develops an inventory listing all expected radiological and chemical hazards. These results are a key input to the process of hazard identification.

Hazard identification is divided into three steps: 1) the division of the facility into storage and process activities, 2) facility information gathering to identify hazards, and 3) screening for common hazards.

3.3.1.1.1 DIVISION OF THE FACILITY

The WSB processes various radioactive liquid waste streams generated by the Mixed Oxide Fuel Fabrication Facility (MFFF) and the Pit Disassembly and Conversion Facility (PDCF). These operations include the receipt of one High Activity Waste (HAW) stream and two Low Activity Waste (LAW) streams, concentration, neutralization, and solidification of these streams, staging of the solidified waste form, operation of an analytical laboratory for process samples, and the packaging and staging of process generated job waste. Consequently, the CHAP team divided the WSB into the basic process activities/areas (HAW process, LAW process, cementation area, laboratory, waste handling, transfer lines, ventilation, chemical storage, facility wide events, and micellaneous events) and mapped these activities to specific locations to facilitate hazard identification and evaluation.

3.3.1.1.2 FACILITY INFORMATION GATHERING

Facility information gathering included both reviews of current design documentation and direct interactions with the cognizant individuals responsible for the specific process activities in the facility. The team performed information gathering to identify hazardous materials and energy sources that are currently known or that may be associated with the WSB. The team used a hazards checklist or legend that listed generic facility hazards as a useful aid in conducting hazard identification.

Thus, the team developed listings of expected radiological and chemical hazards. These results are a key input to the process of hazard identification. Hazard identification tables were filled out for each storage and process activity. Because the WSB is currently in design, information gathering was limited to reviews of existing safety documents, facility drawings and design documents, and consultations with designers.

3.3.1.1.3 SCREENING OF COMMON HAZARDS

The third step in the hazard identification process is the screening of common hazards. This process identified standard industrial hazards (SIHs) and routinely accepted hazards. These are defined as hazards that are routinely encountered in general industry and construction, and for which national consensus codes and/or standards (e.g., Occupational Safety and Health Administration [OSHA] and transportation safety) exist to guide safe design and operation. In accordance with DOE-STD-3009-94 (Ref. 2), evaluations of SIHs and routinely accepted hazards were not included in this safety analysis. Some SIHs and routinely accepted hazards were identified as potential initiators and contributors to events resulting in radiological and chemical releases. The following characteristics were used to determine hazards that are SIHs and routinely accepted hazards:

- The hazard is controlled by OSHA regulations or one or more national consensus standards implemented at SRS (e.g., American Society of Mechanical Engineers, American National Standards Institute [ANSI], National Fire Protection Association [NFPA], Institute of Electrical and Electronics Engineers [IEEE], and National Electrical Code) where these standards are adequate to define special safety requirements, unless in quantities or situations that initiate events with serious impact to the public, workers, or the environment.
- Hazards such as noise, electricity, flammable materials, welding operations, small quantities of chemicals that would likely be found in homes or general retail outlets, and hazardous materials transported on the open road in U.S. Department of Transportation (DOT) specification containers are considered to be common hazards encountered in everyday life.

Examples of common hazards are those involving the following:

- Specific materials (e.g., lead and asbestos) that have their own control program
- Thermal energy sources (potential for burns)
- Hazards typically found in machine shops
- Forklifts
- Cranes
- Fires not involving radioactive or hazardous materials
- Gas cylinders transported and stored in DOT configuration and within design limits unless they are stored in large (i.e., hundreds) quantities at one location
- Personnel pinches, trips, falls, slips, etc.

- Confined space hazards
- Hazards typically found in office areas
- Mechanical presses

If the identified hazard does not meet the appropriate screening criteria for identification as a common hazard, then the hazard is carried forward into the hazard evaluation. If the identified hazard is documented as a common hazard, no further consideration is given to it, except as a potential initiator/contributor to an event which releases radiological or chemical material.

Protection against SIHs and routinely accepted hazards is provided by national consensus codes or standards that guide safe design and operation and the practice of basic safety in the workplace. Such hazards were formally and systematically treated by the following programmatic elements:

- SRS has implemented the DOE Integrated Safety Management System whose primary goal is to "Do Work Safely." Industrial safety is an integral component of the Integrated Safety Management System and involves detection, mitigation, management, and prevention of workplace hazards to protect against accidental death, injury, property damage, or interruption of production (Ref. 14).
- WSRC Employee Safety, WSRC Procedure Manual 8Q (Ref. 15) defines basic site-wide industrial safety policies and minimum requirements. This manual is augmented by detailed rules and procedures developed by departments and facilities for activities within their areas of responsibility for industrial safety.
- During the design phase of SRS facilities, or modifications to existing facilities, various design reviews contribute to SIH identification.
- A design hazards analysis process review was initiated by the design team to supplement the CHAP (Ref. 5) and further address industrial safety in the WSB. The design hazards analysis process review is documented in References 16 and 17.

3.3.1.1.4 REVIEW OF PAST RELEVANT OPERATING HISTORY

The WSB is a project in the design stage and, as such, has no relevant operating history. However, DOE complex wide occurrence reports and lessons learned were reviewed prior to and during the execution of the hazard analysis process to facilitate the identification of potential hazardous conditions that could occur during the operation of WSB.

3.3.1.2 Hazard Categorization

The purpose of the hazard categorization is to evaluate the potential radiological and chemical hazards associated with the facility and to determine the proper hazard categorization based on the guidelines provided by 10 CFR 830, DOE-STD-1027-92, and WSRC Procedure Manual 11Q, as applicable (Ref. 1, 3, 7). The focus in the hazard categorization is on the radiological and chemical inventory, without credit for controls. The major objective of the hazard categorization

is to provide the input data for a graded approach to develop the facility safety documentation in accordance with 10 CFR 830 (Ref. 7).

Requirements for the three hazard categories for facility categorization of nuclear facilities are identified in 10 CFR 830(Ref. 7):

- A facility is designated as Hazard Category (HC) 1 if the analysis shows the potential for significant offsite consequences
- A facility is designated as HC-2 if the analysis shows the potential for significant onsite consequences beyond localized consequences
- A facility is designated as HC-3 if the analysis shows the potential for significant localized consequences only
- A facility is considered to be below HC-3 if the analysis shows the potential for consequences to be less than those required for categorization as a HC-3 nuclear facility

The analysis conducted to determine the facility HC is performed without credit taken for engineered features or ACs. Examples of engineered features or ACs are those specific facility features (not including site location), such as facility structure, stacks, equipment, systems, actions, or operating conditions that are established to control risk.

The criteria for determining the chemical hazard categorization of nuclear or non-nuclear facilities based on chemical assessments are as follows:

<u>High Hazard Chemical, Low Hazard Chemical, or Other Industrial</u>

- High Hazard Chemical Facility – where the gross chemical inventory meets or exceeds the Threshold Quantity (TQ) of 29 CFR 1910.119 or 40 CFR 68 (Ref. 18, 19). If a chemical does not have a TQ, the Threshold Planning Quantities (TPQ) of 40 CFR 355 will be used (Ref. 20).
- Low Hazard Chemical Facility – where the gross chemical inventory is below the TQ of 29 CFR 1910.119 and 40 CFR 68 and the releasable chemical inventory is at or above the Reportable Quantity (RQ) of 40 CFR 302, Table 302.4 (Ref. 21). If a chemical does not have a TQ, the TPQ of 40 CFR 355 (Ref. 20) will be used.
- Other Industrial – where the releasable chemicals inventory is below the RQ of 40 CFR 302.4, (Ref. 21).

Analysis is not required for any chemicals that do not exceed the RQs of 40 CFR 302.4 (Ref. 21), the TPQs of 40 CFR 355 (Ref. 20), the TQs of 29 CFR 1910.119 (Ref. 18), or 40 CFR 68 (Ref. 19) because chemicals in quantities less than those listed are generally accepted by the public.

For chemical hazards, credit is taken for the existing location and the physics of a material release and dispersion, but not for containment, confinement, shielding, protection systems, ACs, or human activities.

3.3.1.3 Hazard Evaluation

The hazard evaluation constitutes the primary focal point of the hazard analysis. Hazards are characterized by a team in the context of actual facility operations and processes by considering feasible release mechanisms (or events), estimating initiating event frequency, estimating consequences of the release, identifying preventors and mitigators, and assigning a risk bin. The purpose of the hazard evaluation is to ensure a comprehensive assessment of facility hazards and to focus attention on those events that pose the greatest risk to the public, onsite worker, and the Facility Workers (FWs). It provides the detailed information that allows for the development of specific events and scenarios associated with hazardous material releases and the estimation of their frequencies and consequences. The majority of information required to perform the hazard evaluation is obtained through system-by-system reviews of facility documentation and consultations with facility designers. The hazard evaluation is performed in accordance with the CHAP Manual, which meets the requirements of 10 CFR 830, DOE-STD-3009-94, WSRC Procedure Manual 11Q, and the WSRC Integrated Work Process (Ref. 2, 3, 5, 7, 22).

Accident analysis entails the formal quantification of the consequences of a subset of DBAs that define the safety envelope for the facility. These DBAs are to represent a complete set of bounding conditions. Unique accidents are those with sufficiently high-risk estimates that individual examination is needed (e.g., a single fire whose specific parameters result in approaching the offsite EG and represent situations of major concern). Representative accidents bound a number of similar accidents of lesser risk (e.g., the worst fire for a number of similar fires does not challenge the offsite EG, and represents a situation of concern). Representative accidents are examined to the extent that they are not bounded by unique accidents, including adequacy and controls. In any case, at least one bounding accident from each of the major types (fire, explosion, spill, etc.) determined from the hazard analysis should be selected unless the bounding radiological consequences are “Low”. Accidents are identified and listed by accident category (i.e., internally and externally initiated) and type (fire, explosion, spill, etc.).

WSRC Procedure Manual SCD-11 requires that hazardous events be initially identified in the hazard analysis utilizing an unmitigated hazard evaluation (Ref. 6). The focus is on the impact of maximum energy or material source term (ST) release without credit taken for engineered safety features, ACs, or regard for event frequency. These events are the bases for subsequent analyses such as accident analyses, Emergency Preparedness Hazards Analyses, and Fire Hazards Analyses.

The scope of the hazard evaluation included the following:

- All aspects of facility process and modes of operation including startup, shutdown, production, and routine maintenance considered part of operations, as well as nuclear criticality (where applicable).
- Natural phenomena (e.g., earthquakes, tornadoes, and straight-line winds) and external events (e.g., aircraft and vehicular impact).
- The entire spectrum of possible process events for a given hazard in terms of both frequency and consequence levels.

- Hazards addressed by other programs and regulations (e.g., Process Safety Management Standard, OSHA, Resource Conservation and Recovery Act, DOT, and the Environmental Protection Agency) are included, only if loss of control of the hazard will result in a chemical or radiological release.

The scope of the hazard evaluation does not include the following:

- Willful acts, such as sabotage
- Hazards routinely accepted by the public as SIHs (These are screened during the common hazard screening process prior to conducting the hazard evaluation as per Subsection 3.3.1.1.3.)

Prior to beginning and during the evaluation, the Inputs and Assumptions (I&As) for the facility were determined and are documented in the CHAP report (Ref. 4). Assumptions are general statements that govern the boundaries of the analysis. Inputs are specific conditions that are a part of facility operations or parameters used in the analysis. Inputs include inventory information and specific passive features (i.e., no mechanical or human involvement) such as the facility construction. Any I&As identified contained the specific information for which the I&A is valid such that it can be credited in the hazard evaluation.

Using the results of hazard identification as a basis, the CHAP team considered detailed information regarding hazardous material and energy sources in the context of facility operations to begin developing specific release events. The CHAP team developed event scenarios for each storage or process activity wherever a potential exists for a release of hazardous energy and/or material. The scenarios covered the entire spectrum of possible events for a given hazard, from small consequence events for which procedures or equipment are acknowledged to provide adequate protection, to worst-case conditions. Event categorization, identification of event cause(s), assignment of initiating event/event frequency and unmitigated/mitigated consequence levels, identification of mitigative and preventive features, screening for common hazardous events, and risk binning were tasks conducted by the CHAP team.

The primary goal of the hazard evaluation was to identify and evaluate specific events associated with hazardous material releases. The hazard evaluation is presented in tabular form and includes the following information:

- Event category/number
- Event description
- Causes
- Method of detection
- Event frequency level (unmitigated and mitigated)
- Consequence level (unmitigated and mitigated)
- Risk rank (unmitigated and mitigated)
- Preventive controls (SSCs and ACs)

- Mitigative controls (SSCs and ACs)

Each of these elements is discussed in the following sections.

3.3.1.3.1 EVENT

The first step in the hazard evaluation process is to identify events that could result from the facility hazards. Hazardous energy sources, hazardous material sources, and their locations are evaluated to develop a complete list of potential events. The events are then included in the hazard evaluation tables. These tables include an event number, event category, and postulated event description. The event number is simply a method for identifying each event. Events are numbered to provide each with a sequential reference.

The event categories and corresponding codes used in the hazard evaluation tables are as follows:

Code	Event Categories
E-1	Fire
E-2	Explosion
E-3	Loss of containment/confinement
E-4	Direct radiological exposure
E-5	Nuclear criticality
E-6	External events
E-7	Natural phenomena

Each process is analyzed against the event categories (E-1 through E-7), one at a time, postulating event scenarios for the applicable hazardous energy sources and hazardous material sources. The identified event scenarios cover the spectrum of possible events for a given hazard from small consequence events, for which existing procedures or equipment is acknowledged to provide adequate protection, to reasonable worst-case conditions, in terms of both event frequency and consequence magnitude.

The postulated event description clearly defines the nature of the event. It includes information concerning the type of event, location, and hazardous material source. This information is provided in the hazard evaluation tables (Appendix A) to clearly define the scenario that is being evaluated.

3.3.1.3.2 CAUSES

The second step in the hazard evaluation process is to determine the cause of each postulated event. The hazard evaluation tables contain a description of these causes. Extensive in-depth reviews of the systems, historical event data, and other sources of information (e.g., existing safety documentation) determine the majority of the causes. The causes of the postulated event

scenarios include postulated mechanical failures, operator errors, analysis errors, and environmental and operating conditions. The causes of a postulated event are clearly identified to support the frequency evaluation for the event and to assist in identifying appropriate controls, where required.

3.3.1.3.3 METHOD OF DETECTION

The method of detection includes operator interaction or features designed to detect initiating events or subsequent event progression. These include alarms, monitors, indicators, and an operator's ability to recognize the events by visual observation or sound.

3.3.1.3.4 FREQUENCY LEVEL

The next step in the hazard evaluation process is to determine the frequency level for the occurrence of a postulated event resulting from the causes identified. The hazard evaluation includes estimates of the frequency levels. Event frequency evaluation is a qualitative or semi-quantitative process that involves assigning a frequency level to each event in the hazard evaluation tables based on the event's root cause(s). Frequency levels and descriptions are based on DOE-STD-3009-94 (Ref. 2). Sources of frequency information include generic initiator databases, natural phenomena frequency levels, engineering calculations, failure rate data, and facility experts. The frequency level is recorded in the hazard evaluation tables according to the Table 3.3-2 lettering scheme along with the source of the frequency level. Erring in the conservative direction from best-estimate values accommodates uncertainties in frequency levels.

When evaluating event frequency for the unmitigated event, credit was taken only for items identified as I&As. Any preventive feature or assumption credited during frequency determination must be identified in the hazard evaluation tables for functional classification purposes so that these I&As may be protected.

For the mitigated hazard analysis, credit is taken for preventive features selected to reduce the likelihood of occurrence of the unmitigated event. When selecting "Preventive controls" there is no requirement to demonstrate that the resulting event frequency is Beyond Extremely Unlikely (BEU). The preventive control should have an appropriate likelihood of performing its safety function. Instrument Society of America S84.00.01 will be followed for Safety Significant instrumented systems. (Note that SRS implementation of these requirements is through the Site Engineering Standard 01703.) For Safety Class instrumented systems, the applicable nuclear industry IEEE Standards from DOE Guide 420.1-1 will be followed.

3.3.1.3.5 PREVENTIVE CONTROLS

A preventive control is any feature that could readily be expected to act to prevent the release of hazardous material, either partially or totally, to an unwanted location; thus, reducing the frequency of the associated release event. The selection of such features is made without regard to any possible pedigree of the feature such as procurement level or current classification. These might include engineered features (e.g., SSCs), ACs (e.g., procedures, policies, or programs),

inherent features (e.g., physical or chemical properties, location, or elevation) operating individually or in combination. Preventive controls are those which are assumed to be operable prior to an event. They may or may not be required to function during or following the event.

In the control selection process, DID principles are followed. The intent of the DID approach is to build in layers of defense against a release of hazardous materials so that no one layer by itself, no matter how effective, is completely relied upon. To compensate for potential human and mechanical failures, DID is based on several layers of protection with successive barriers to prevent the release of hazardous material to the environment. This approach includes the protection of the barriers to avert damage to the facility and to the barriers themselves. It includes further measures to protect the public, workers, and the environment from harm in case these barriers are not fully effective.

3.3.1.3.6 MITIGATIVE CONTROLS

Mitigative controls are any features that are expected to reduce the consequences associated with the release of hazardous material. The identification of such features is made without regard to any possible pedigree of the feature, such as procurement level or current classification. Mitigative features are those that are assumed to be operable during an event or after the event, and may not be required to be operating prior to the event initiation. Therefore, mitigative controls must be capable of withstanding the environment of the event. These might include engineered features (e.g., SSCs), ACs (e.g., procedures, policies, or programs.), or inherent features (e.g., physical or chemical properties, location, or elevation.) operating individually or in combination.

Mitigative features constitute a significant portion of DID evaluation, and they provide essential input to functional classification. Therefore, it is important that the identification effort captures essentially all of the possible features that could be counted on to reduce the consequences of a release of the hazardous material to an unwanted location.

3.3.1.3.7 CONSEQUENCES

Event consequences are documented by specifying the impact on the receptors (described below) and the criteria used to assess the impact. There are three categories of consequences evaluated: radiological, chemical, and physical. Any potential impact of consequences on other systems is also documented in this column of the hazard evaluation tables. For hazard analysis purposes, consequences to human receptors are defined as the dose/exposure or physical injury to the specified receptors. Consequences are a function of the type and characteristics of the hazard, the quantity of material released, the release mechanism, relative location of the release, and any relevant transport characteristics. Consequences are determined from (1) simple ST and dose calculations, (2) existing safety documentation, and/or (3) qualitative assessment. The hazard analysis team utilizes its discretion, expertise, and knowledge of facility hazards to select one or more of the above methods appropriate for consequence determination. Unlike frequency levels, that cover two orders of magnitude in one frequency bin of the binning matrix, consequence levels sometimes span less than one order of magnitude. Thus, a more refined effort may be required by the hazard analysis team to determine the appropriate consequence level for a given

event and receptor. Much like frequency evaluations, consequence determinations are to be conservative, especially for those events with consequences at the high end of a given level.

The evaluation uses a qualitative or semi-quantitative assessment based on the quantities of radionuclides and chemicals released as a result of each postulated event. In addition, these quantities are dependent on the release fractions associated with each combination of material form and event type. The semi-quantitative consequence evaluation assesses the event by applying bounding release fractions.

Consequences are evaluated at various receptor locations to assess health effects of the postulated release. Table 3.3-3 defines the terms used to describe the radiological, chemical, and physical consequence levels used in the hazard evaluation tables for the specified receptor locations. Receptors are the FW, the CW, and the Maximally-exposed Offsite Individual (MOI). FWs are located at the scene of the accident. CWs are located outside of the facility or located outside of the last possible preventive or mitigative barrier of the accident. The MOI is located at the closest SRS site boundary. FWs, located at the scene of the accident, are assumed to be the bounding FW used in the hazard analysis. The bounding CW is the maximally-exposed individual located outside of the facility (i.e., outside of the last barrier, but within the SRS site boundary). The consequences for this individual are evaluated at a distance of 100 meters for the hazard analysis and a qualitative judgment is made as to the appropriate results. These receptors are consistent with those used in Revision 15 of Procedure 2.25 of the Conduct of Engineering and Technical Support Manual, WSRC Procedure Manual E7 (Ref. 23).

For the unmitigated consequence determination, crediting an SSC or AC for its mitigative properties is discouraged, although initial conditions such as physical features of the facility structure or inventory limits may be used to define the event. Any mitigative input or assumption credited during unmitigated consequence determination must be listed in the hazard evaluation tables for functional classification purposes.

For mitigated hazard analysis purposes, consequences are defined as the dose or exposure at specified receptor locations based upon the mitigated release of hazardous material. Consequences are a function of the type and characteristics of the hazard, the quantity of hazardous material released, the release mechanism, relative location of the release, and any relevant transport characteristics. The mitigated consequence levels are derived from the facilities accident analyses and consequence analyses and the collective judgment of the hazard analysis team.

3.3.1.3.8 RISK RANKING

The risk ranking is provided as a measure of the risk associated with the event. Using event frequency and consequence levels, the hazard analysis team “bins” events in a matrix to assess the relative risk. The objective of risk binning is to focus attention on those events that pose the greatest risk to the public and the onsite receptors. Higher risk events might be candidates for additional analysis and/or functional classification evaluation.

Table 3.3-4 provides the risk binning matrices for the three receptor locations considered in the hazard analysis (i.e., Public, CW, and FW). In this table, a rectangular matrix in frequency-consequence space defines the bins.

3.3.2 HAZARDS ANALYSIS RESULTS

As discussed in Section 3.3.1, the hazard analysis consists of three basic analytical activities: hazard identification, hazard categorization, and hazard evaluation. This section provides a discussion of the results of performing these activities.

3.3.2.1 Hazard Identification

To facilitate process hazard identification and evaluation, processes within the WSB were grouped by the activities that occur within. The WSB was divided into the following basic process activities/areas: waste receipt, high activity processing, low activity processing, waste handling, and laboratory operations. Specific activities performed under each basic process activity and the facilities where these activities may be performed are described in Chapter 2 of this PDSA.

The next step to ensure completeness of the identification of hazards was to list hazardous energy sources and hazardous material sources. As part of this systematic process to identify these hazards for the WSB, the following activities were performed:

- Applicable existing safety documentation was reviewed and evaluated to identify the hazardous energy sources and hazardous material sources associated with the WSB
- Discussions with the WSB design team were held, and information was incorporated into this evaluation
- Reviews of WSB design documentation were performed and discussions were held with system experts, engineers, and operators

Finally, based on the results of the design reviews and informational inquiries, hazard identification tables were developed and documented in the WSB Consolidated Hazards Analysis (CHA) (Ref. 4).

3.3.2.1.1 HAZARDS GENERAL TO WASTE SOLIDIFICATION BUILDING

The hazards considered general to WSB processes are identified and briefly described in the following subsections.

3.3.2.1.1.1 Electrical

There are numerous electrical hazards present throughout the WSB. Electrical hazards present in the facility are cable runs, wiring, electrical equipment, batteries, motors, and service outlets. Electrical hazards that may be found in the facility under special circumstances are portable

generators, heaters, and power tools. Other electrical hazards that may be found in the facility include transformers, transmission lines, switchgear, battery banks, and light fixtures. Electrical power systems and miscellaneous tools that use electrical power may act as ignition sources for combustibles and flammables.

3.3.2.1.1.2 Thermal

There are heat sources associated with the steam system used to operate the low and high activity evaporators. The steam is generated by a package boiler outside the facility and piped to the processes. There are electric heaters associated with the heating, ventilation, and air conditioning system.

There are open flame sources associated with some of the instruments in the analytical laboratory. Additionally, open flame or spark sources associated with hot work (welding, grinding, cutting, etc.) may occur periodically within the WSB. Open flame and spark sources are potential initiators for fires and explosions within the WSB.

3.3.2.1.1.3 Explosives/Pyrophorics

Vessels may contain explosive gases such as hydrogen produced through radiolysis, and there is a small quantity (e.g., 20 pounds) of propane in the analytical laboratory area.

3.3.2.1.1.4 Flammables and Combustibles

Flammable liquids and gases may exist in the facility such as ethyl alcohol, hydraulic fluid, propane, cleaning agents, or decontamination agents. Flammables are of concern as potential sources of fire that could impact radiological inventories. Flammables may also exist in waste containers.

The WSB may contain combustible pallets, paper, plastic (e.g., signs, plastic containers, tarps, or personnel protective equipment [PPE]), and petroleum-based combustibles (e.g., grease). These materials are associated with the operation of the facility. These combustible materials can be contributors for fire events (e.g., elevate the combustible loading in the building or spontaneous combustion).

3.3.2.1.1.5 Hazardous/Toxic Materials

The WSB uses sodium hydroxide and nitric acid in its processes. There are storage vessels for these materials located outside the building. These stored chemicals are evaluated through a formal screening process and are controlled through site programs that incorporate national consensus codes and standards for storage and handling. Onces these chemicals are introduced into the process they are evaluated for process hazards and initiators of radiological releases, which mostly bound the toxicity hazards of sodium hydroxide and nitric acid. The analytical laboratory uses an assortment of chemicals in its operations that are present in relatively small

quantities. The chemicals used in the analytical laboratory represent a SIH due to the small (laboratory scale) quantities of chemicals present. Chemicals are, however, evaluated through a formal general screening process and also as potential initiators of fires and explosions due to exothermic reactions either through improper mixing, storage, or handling.

3.3.2.1.1.6 Kinetic – Linear and Rotational (Friction)

As part of normal operation and maintenance, the WSB is expected to contain multiple sources of kinetic energy as well. These include vehicles, motors, power tools, moving parts associated with equipment (e.g., belts and bearings), and movement of material via forklift. Other kinetic energy hazards identified include gears, grinders, fans, drills, and saws. These hazards may be initiators for radiological releases.

3.3.2.1.1.7 Potential (Pressure)

An additional hazard group considered involves sources of potential energy in the form of pressure. Hazards in this category, and identified for the WSB, include pressurized gas bottles (e.g., fire extinguishers, propane tanks, or calibration gas bottles), and pressurized systems (e.g., hydraulic system on forklifts). These hazards may be initiators for loss of confinement events or pressurized releases.

3.3.2.1.1.8 Potential (Height/Mass)

In addition to the pressure hazards, there are also hazards related to elevated equipment that could contribute to accidents involving drops or falls. These include overhead equipment, hoists, elevated work surfaces, man-lifts, scaffolds, and ladders. These hazards may be initiators for loss of confinement events.

3.3.2.1.1.9 Physical Hazards

The WSB may also contain multiple sources of physical hazards, such as sharp edges, pinch points, tripping hazards, confined spaces, and temperature extremes. These physical hazards may result in an injury to the worker and are addressed by the application of national consensus codes and standards in the design and construction of the facility. Since these hazards are not initiators of radiological or chemical releases and are adequately addressed by national consensus codes and standards, they are classified as SIHs.

3.3.2.1.1.10 Natural Phenomena

Normal weather provides hazards such as rain, wind, snow, ice, and sun. Other more hazardous but less frequent items such as earthquake, flood, lightning, tornadoes, and hurricane winds pose serious hazards and are potential initiators of major events.

3.3.2.1.1.11 External Events

External vehicles such as small airplanes or helicopters could crash into the WSB and cause spills, fires, and explosions.

Wildfires are a potential initiator of facility fires.

3.3.2.1.1.12 Other

Some WSB activities use laboratory scale quantities of materials such as liquid nitrogen and gaseous argon, which represent asphyxiation hazards. Specifically, these materials are located in the laboratory area. These materials do not provide an initiator for radiological releases and are handled per standard industrial practices and are, therefore, classified as a SIH.

3.3.2.1.2 RADIOLOGICAL INVENTORY

The radiological/fissile hazard assessment required the development of a bounding radioactive inventory for the WSB. The facility accommodates the processing of multiple waste streams; therefore, inventories were developed for each of these processes and compiled to establish the total inventory for the facility.

The volume of MFFF high alpha waste transferred to the WSB will vary depending on the feedstock the MFFF is running; however, the maximum amount of radionuclides transferred remains the same (approximately 24.5 kilograms [kg] of Am-241 per year). This waste stream will be transformed into a cemented waste form for disposal.

The LAW has trace concentrations of Am-241 compared to the MFFF HAW. The activity level of the LAW originates from the trace Am-241, as well as the presence of several other isotopes (Pu-239, Np-237, U-238, and Pa-233) at similar levels. This waste stream will be transformed into a cemented waste form for disposal.

The facility also generates and stages its own stream of job control Transuranic (TRU) waste. The WSB may stage 4 TRU waste drums of job control waste outside of the main facility. These drums are assumed to contain a maximum of 80 PEC each. Additionally, up to 48 drums of solidified cementatious waste produced by WSB operations may be stored external to the facility. The solidified cementatious waste has up to 45 grams of Am-241 per drum.

The bounding radiological inventories for the WSB are presented in Table 3.3-5. These inventory values represent approximately 40 weeks of receipts at the highest anticipated concentrations stored in the HAW process vessels and is taken from Reference 24.

The Material At Risk (MAR) for individual events is identified in the hazard evaluation tables (Appendix A).

3.3.2.1.3 CHEMICAL INVENTORY

The WSB chemical inventory is provided in Table 3.3-9 for the chemicals internal to the HAW stream, Table 3.3-10 for those internal to the LAW stream, Table 3.3-11 for bulk chemicals used in WSB process treatment or support, and Table 3.3-12 for those chemicals used in the WSB Laboratory activities. Inventories listed are based primarily on estimated annual usage. Actual inventory on hand and "each time use" is expected to be significantly less. In addition to WSB chemical inventories, safety parameters, hazard categorization and evaluation criteria are also provided in Tables 3.3-9 through 3.3-12. The chemical inventory tables, hazards evaluation and analysis methodology and conclusions are provided in detail in the CHAP, Appendix E (Ref. 4).

All of the chemicals were screened per the chemical evaluation guidance provided in DOE-STD-1189-2008, Appendices B and C (Ref. 25). Chemicals that did not screen out were evaluated opposite the events in the CHAP hazard evaluation tables to determine potential bounding events and release scenarios. Chemicals of potential significant risk to the FW, CW and MOI identified during the DOE-STD-1189-2008 screening were brought forward for more detailed hazard evaluation and/or consequence/concentration analysis, if required. Chemicals screened as needing chemical concentration analysis for the CW or MOI were compared to chemical evaluation guides in DOE-STD-1189-2008, Appendix B, and were evaluated for the need of safety controls. Although the standard indicates the chemicals at risk to the FW may be screened out using the same criteria in Appendix B, potential FW risk for all chemicals were qualitatively evaluated using the four conditions listed in DOE-STD-1189-2008, Appendix C, page C-1. Those chemicals exceeding evaluation guides, or indicated as high risk to the FW, were further evaluated for necessary safety related controls.

The chemical screening and evaluation process applied per guidance in DOE-STD-1189-2008, Appendix B indicated that six chemicals (includes radionuclides with the largest inventory and/or that exhibit potentially significant chemical toxicity), nitric acid, americium, plutonium, neptunium, gallium and uranium (indicated in Tables 3.3-9 through 3.3-12) warranted additional evaluation for potential accidents and consequences to the CW and MOI. Chemical concentrations were determined for those six chemicals that did not screen out and were compared to the chemical evaluation guidance in DOE-STD-1189-2008, Appendix B (Table 3.3-13). No chemical concentrations exceeded the evaluation guides ("High") for the CW or the MOI, and therefore no new safety related controls were identified as a result of the concentration/consequence evaluation. All of the consequences were "Negligible" for the MOI. All of the consequences to the CW were "Negligible" except for nitric acid and uranium. Nitric acid consequences were "Low" for the CW. Uranium consequences were "Moderate" to the CW.

All WSB chemicals were qualitatively evaluated for consequences opposite the additional criteria for FW in DOE-STD-1189-2008, Appendix C, page C-1, as follows:

- Energetic releases of high concentrations of toxic chemical materials where the FW would normally be immediately present and may be unable to take self-protective actions
- Deflagrations or explosions within process equipment or confinement and containment structures or vessels where serious injury or death to a FW may result from the

fragmentation of the process equipment failing or the confinement (or containment) with the FW close by

- Chemical or thermal burns to a FW that could reasonably cover a significant portion of the FW's body where self-protective actions are not reasonably available due to the speed of the event or where there may be no reasonable warning to the FW of the hazardous condition
- Leaks from process systems where asphyxiation of a FW normally present may result

The evaluation indicated that all chemical hazards to the FW are managed through controls directed through industry and site standards and the appropriate Safety Management Programs (SMPs). One WSB Laboratory chemical, collodion (ethyl ether ~70%, ethyl alcohol ~25%, nitrocellulose ~5%), was identified for the need of a Safety Significant control due to a deflagration potential. Ethyl ether compounds have the potential to change over time and exhibit hazardous shock sensitivities. The Chemical Control Program is credited with a Safety Significant function of managing these shock sensitive chemicals to ensure conditions supporting an energetic reaction will not occur.

Bulk chemicals (primarily nitric acid and sodium hydroxide) used in the HAW/LAW processing were evaluated for potential radiological accident event initiators and also chemical events in the CHAP with results provided in the hazard evaluation tables (Ref. 4). None of the events, including chemical mixing, were indicated as having significant ("High") consequences to any receptor. In addition, the chemicals that were evaluated for concentration/consequence determination in the DOE-STD-1189-2008 screening, and that had a consequence above "negligible" (nitric acid and uranium), were also evaluated for potential mixing issues. No significant mixing issues were identified due to the different consequence concerns (e.g., nitric acid is more of an acute physical corrosive/reactive, short term concern, whereas, uranium consequences are not as an acute concern, primarily long term/kidney).

Many of the chemicals used across the WSB, although screened out during this evaluation, exhibit some hazardous characteristics and risk to the FW and must be managed accordingly. The primary DID attributes for chemical safety in the WSB, the Chemical Control Program and the Industrial Hygiene SMPs, in addition to the site Worker Safety SMP (primarily the evaluation of activity hazards).

3.3.2.2 Hazard Categorization

As stated in Subsection 3.3.1.2, the radiological hazard categorization of the facility is determined by comparing the inventory of each radionuclide to the TQs provided in DOE-STD-1027-92 (Ref. 1). The chemical hazard categorization is determined by comparing the inventory of each chemical to the RQs of 40 CFR 302.4, the TPQs of 40 CFR 355 (if no TQ is available), and the TQs of 29 CFR 1910.119 and 40 CFR 68 (References 21, 20, 18, and 19, respectively). The results of these comparisons are summarized in the following sections.

3.3.2.2.1 RADIOLOGICAL RESULTS

The radiological analysis involved an evaluation of the maximum radionuclide inventory in the WSB. The comparison of the WSB radionuclide inventories to the TQs set forth in DOE-STD-1027-92 and ANSI/American Nuclear Society-8.1-1998 (Ref. 1, 26) demonstrated the following:

- The inventories of some radionuclides (e.g., Am-241 or Pu-239) in the facility were greater than their HC-2 threshold limits.
- The sum of the ratios of the quantity of each radionuclide to the HC-2 threshold limit was greater than one.

Therefore, based upon the radiological inventories, the WSB is categorized as HC-2 (Ref. 4).

3.3.2.2.2 CHEMICAL RESULTS

Tables 3.3-9 through 3.3-12 show the chemicals and their comparison against the RQs, TQs, and TPQs contained in the following lists:

- 40 CFR 302.4, *Protection of the Environment,* "Chapter 1 Environmental Protection Agency, Part 302 Designation, Reportable Quantities, and Notification, Subpart 4, Designation of Hazardous Substances" (Ref. 21)
- 40 CFR 68, *Protection of the Environment*, "Chapter 1 Environmental Protection Agency, Part 68 Chemical Accident Prevention Provisions, Subpart 130, List of Substances" (Ref. 19)
- 29 CFR 1910.119, *Labor*, "Chapter 17 Occupational Safety and Health Administration, Part 1910 Occupational Safety and Health Standards, Subpart 119 Process Safety Management of Highly Hazardous Chemicals" (Ref. 18)
- 40 CFR 355, *Protection of the Environment*, "Chapter 1 Environmental Protection Agency, Part 355 Emergency Planning and Notification, Appendix A The List of Extremely Hazardous Substances and Their Threshold Planning Quantities" (Ref. 20)

Comparison to the RQ and TQ/TPQ criteria indicates that there are several chemicals that exceed their respective RQs and nine chemicals with TQ/TPQs whose inventory is either well below the specified limits or is not regulated due to the dilute nature of the chemical in solution. The WSB facility is therefore considered chemically to have a "Low Hazard Chemical" Facility Hazard Categorization, per WSRC 11Q Manual (Ref. 3).

3.3.2.2.3 CRITICALITY RESULTS

Due to the nature of the material to be received, a criticality is not considered a credible event (Ref. 27). This is supported by the fact that the Waste Acceptance Criteria Program (WACP) SAC will prohibit the receipt of unsafe quantities of fissile material at the WSB, and that the MFFF and PDCF waste generators will have criticality controls on their waste (MFFF/PDCF

Waste Acceptance Criteria [WAC], as well as the WSB WAC, is included in the WSB WACP SAC) that will render it inherently critically safe prior to transfer to the WSB.

3.3.2.3 Hazard Evaluation

The hazard evaluation results for the WSB are documented in the CHA (Ref. 4). The hazard evaluation was performed in accordance with the methodology provided in Section 3.3.1. The majority of the information required to perform the hazard evaluation was obtained through reviews of design documentation and discussions with project personnel. The identified event scenarios cover the spectrum of possible events for a given hazard from small consequence events for which existing procedures or equipment is acknowledged to provide adequate protection, to reasonable worst-case conditions, in terms of both event frequency and consequence magnitude. The subset of these events that challenge either offsite EGs or onsite evaluation criteria is included in Appendix A to this chapter.

3.3.2.3.1 PLANNED DESIGN AND OPERATIONAL SAFETY IMPROVEMENTS

This section is not applicable. The WSB is currently in the design stage.

3.3.2.3.2 DEFENSE-IN-DEPTH

To compensate for potential facility failures, DID is based on several layers of protection with successive barriers to prevent the release of hazardous materials to the environment. This approach includes measures to protect the public, workers, and the environment from harm in case any of these barriers are not fully effective. Defining DID as it exists at a given facility is important for determining a safety basis; however, no requirement to demonstrate a particular number of layers of defense is imposed. DID for identified hazardous events is provided by facility design and administrative features that protect the public, the FW, and the environment. The entire set of DID controls for the WSB is listed in Table 3.3-1.

3.3.2.3.2.1 Defense-in-Depth Structures, Systems, and Components

SSCs that are major contributors to DID or worker safety as determined in the hazard analysis are considered for designation as Safety Significant SSCs. The designation of DID design features as Safety Significant SSCs is based on the qualitative assessment as discussed above. For the WSB, the Safety Significant SSCs are designated based on their being DID for DBAs and/or their contributions to worker safety. Certain SSCs prevent the FW from being exposed to unnecessary hazards. Table 3.3-1 lists SSCs and administrative programs that are designated as worker safety controls along with their corresponding hazard analysis event. The WSB SSCs that are designated as Safety Significant are discussed in Chapter 4 of this PDSA.

3.3.2.3.2.2 Defense-In-Depth Administrative Features

The primary method for providing DID through ACs is the development of facility procedures. These facility procedures are lower-tiered documents that implement site-wide requirements and the requirements of DOE Orders. These procedures also ensure safe facility operation and provide additional means of safety control. DID administrative features are also identified in Table 3.3-1. Further, important subsets of ACs are identified as SACs. SACs include ACs that were selected for specific potential accident scenarios and which also have safety importance equivalent to engineered controls that would have been classified as Safety Significant if the engineer controls were available and selected. SACs also include ACs that are the basis for validity of the hazard or accident analysis (e.g., a hazardous material inventory such as combustible materials or MAR limits).

The implementation of these facility procedures and ACs provides the infrastructure for a layer of DID for potential events at the WSB. These programs, and the personnel training associated with the development of a thorough understanding of hazards in the workplace, result in a work force that is capable of responding to any accident situation in a manner that mitigates the consequences to individuals at the facility and outside the facility. In addition, many potential accidents are prevented due to the implementation of these facility procedures and personnel training. The ACs identified in Table 3.3-1 are discussed in more detail in the process safety management chapters (i.e., Chapters 7 through 12, 14, and 15) of this PDSA.

3.3.2.3.2.3 Technical Safety Requirements

DOE-STD-3009-94 (Ref. 2) provides basic screening criteria to identify DID features that may require TSR coverage. These items will be identified at a later point in the design process for the WSB.

3.3.2.3.3 WORKER SAFETY

As required by DOE-STD-3009-94 (Ref. 2), potential hazardous events, exclusive of SIHs, and resultant controls to provide for worker safety were determined in the CHA (Ref. 4). This section summarizes the major features protecting workers from the hazards of facility operation. An overview of the information in the hazard evaluation tables (Appendix A) is provided to put in context the required Safety Significant controls to protect the FW or CW during operation of the WSB. The hazardous events identified in Table 3.3-1 are events estimated to result in a significant radiological or chemical consequence to the FW or CW, or a credible, non-SIH prompt worker fatality or serious injury that is immediately life threatening or permanently disabling to the FW.

Presented in Table 3.3-6 are the hazard evaluation events (grouped by Event Type) that require evaluation and identification of safety features to protect the FW or CW from physical, radiological, or chemical consequences. Each event type outlined in Table 3.3-6 is further discussed below to identify worker safety controls and the associated safety function.

The CHAP also identified events that did not pose significant risk to the FW or CW. These events are listed in Table 3.3-7. For additional information on these events, refer to the CHA report (Ref. 4).

LABORATORY LOSS OF CONFINEMENT

These events involve the spill of undiluted samples from the high activity process as a result of operator error or maintenance activities inside or outside of the laboratory glovebox (Events LAB-3-004 and LAB-3-005). Both events result in a "High" unmitigated radiological consequence level to the FW, requiring Safety Significant controls. However, it should be noted that the radiological consequence level to the FW was qualitatively judged to be "High," due to the material splashing into the face of the worker handling the sample and the potential uptake. Unmitigated consequences to the CW were "Negligible."

Selected Controls

For activities outside of the glovebox, the following preventive AC was selected to protect the primary sample container and prevent the event:

- Radiological Protection Program (Safety function: a secondary container will prevent the primary sample container from releasing liquid in the event it is dropped while being handled outside of the glovebox.) – first Level Of Control (LOC)

For this event, an AC was selected due to the lack of available effective engineered features. The the Radiological Protection Program is a safety management program that is typically used to provide worker protection while handling radiological material and is appropriate for this situation.

For activities inside the glovebox, the following mitigative engineered controls were selected, which reduced the consequences of the event by preventing the spills or splashes from directly impacting workers and filtering releases of airborne material:

- Laboratory glovebox (Safety function: prevents hazardous liquid from contacting the worker.) – first LOC
- Laboratory glovebox ventilation system (Safety function: provides filtration of airborne hazardous material.) – first LOC

WASTE HANDLING FIRE

The results in this section apply to a fire event that engulfs the entire TRU waste drum storage pad as a result of the buildup of combustible material and some type of ignition source for the combustible material (Event WH-1-002). Ignition sources may include forklifts, electrical wiring, sparks generated by maintenance activities, etc. The event results in a "High" unmitigated radiological consequence level to the FW requiring Safety Significant controls. Unmitigated consequences to the CW were "Low."

Selected Controls

- Event Response Program (Safety function: requires workers in the area to evacuate in the event of a fire, reducing the potential consequence) – first level of control
- WSB TRU WAC (part of the WSB WACP SAC) (Safety function: limits the quantity of radioactive MAR) – first LOC
- Inventory Control Program (Safety function: reduces the consequence by limiting the MAR) – first LOC

For this event, ACs were selected as mitigators due to the lack of available effective preventive or engineered features. Event response is an appropriate mitigator for FW protection due to the slow development of a fire releasing material from TRU containers.

WASTE HANDLING EXPLOSION

The results in this section apply to energetic events involving 55-gallon TRU waste drums, which deflagrate as a result of the buildup of flammable gases inside the drums and an assumed ignition source (Events WH-2-001, CEM-2-001, and CEM-2-002). These events result in "Moderate" unmitigated radiological consequences to the FW and "High" physical unmitigated consequences to the same receptor. Unmitigated radiological consequences to the CW were "Negligible" to "Low."

Selected Controls

For TRU job waste drums, the WSB TRU WAC (part of the WSB WACP SAC) was selected as an AC to prevent the buildup of flammable gases and prevent the event. The TRU WAC includes requirements that waste drums be properly vented and prohibits packaging of flammable liquids in TRU waste. For the explosion events involving 55-gallon drums outside the HAW cementation enclosure (Events CEM-2-1 and WH-2-1), this control also includes the requirement that a clear vent path is maintained after grouted TRU waste drums are closed to prevent the accumulation of hydrogen gas or volatile organic compounds:

- TRU WAC ((part of the WSB WACP SAC) Safety function: waste drums properly vented and packaged according to the TRU WAC will prevent the buildup of hydrogen and volatile organic compounds. Vent paths must be maintained after drum closure) – first LOC

For an explosion event in a 55-gallon drum inside the HAW cementation enclosure (CEM-2-2), the PVVS will provide dilution flow to prevent flammable gases from accumulating to flammable concentrations and the diesel generator will ensure electric power is available:

- PVVS (Safety function: maintain flammable gas concentration below 25 % of the Lower Flammability Limit [LFL]) – first LOC

- Diesel Generator (Safety function: provide electrical power to active Safety Significant controls when power is not available from the primary electric power supply)

TRANSFER LINE EXPLOSION

This event is an explosion involving the HAW transfer line, resulting from the buildup of hydrogen gas in the line and an ignition source (Event TL-2-002). The event was postulated as an "Unlikely" event and resulted in a "High" unmitigated radiological consequence level to the FW requiring Safety Significant controls. These consequences result from liquid being released. Unmitigated consequences to the CW were "Moderate."

Selected Controls

The HAW transfer line is designed to withstand the pressure of a hydrogen detonation and not fail in a manner that compromises the confinement function of the line jacket. Any material released will be contained by the pipe jacket, preventing the release of HAW solution. In addition, the Event Response Program is credited with providing additional worker protection by requiring appropriate worker response to events that result in a release of material. If this event occurred and the core pipe had a ductile failure, problems with the transfer would be detected and appropriate responses initiated:

- HAW transfer line core piping, valves, etc. will not fail in a manner that compromises the confinement function of the jacketed line (Safety function: protects jacket from effects of detonation) – first LOC
- Jacketed HAW transfer line (Safety function: contains leaks and directs them to a collection point) – first LOC
- Event Response Program (Safety function: worker performs appropriate response)
- Transfer Control Program (Safety function: AC requiring that specific controls be developed and in place for transfer operations while the HAW transfer line is temporarily exposed)

TRANSFER LINE LOSS OF CONFINEMENT

These results apply to the breach and loss of confinement of the HAW transfer line. The breach may occur as a result of over-pressurization, pipe corrosion/erosion, operator error, or overloading due to heavy equipment or construction in the area (Events TL-3-002 and TL-3-004). Also included is an event caused by maintenance activities, vehicle impacts, pipe corrosion/erosion, seismic events, or tornado (Event TL-3-005) that damages the line during a period of time that it is exposed for maintenance or other abnormal activities. The events result in "High" unmitigated radiological consequences to the FW and "Moderate" unmitigated radiological consequences to the CW.

Selected Controls

For a breach of the HAW transfer line inside WSB (Event TL-3-002), a Safety Significant control requiring the line to be jacketed was chosen as a preventive engineered control to contain the leak from a damaged core pipe in the line and two preventive Safety Significant ACs were chosen to further reduce the risk:

- Jacketed HAW transfer line (Safety function: contains leaks and directs them to a collection point) – first LOC
- Structural Integrity Program (Safety function: ensures that the integrity of the HAW transfer line jacket and core pipe is maintained)
- Transfer Control Program (Safety function: identify damaged lines prior to transfer)

For a breach of the buried portions of the HAW transfer line (Event TL-3-004), the following controls were selected:

- HAW Transfer Line Protection Program (Safety function: protect the transfer line from inadvertent excavation into buried line by installing an underground indicator over the line and establishing markings that clearly indicate the location of the buried lines) – first LOC
- Site clearance permit (Safety function: provide restrictions on where and how excavations take place)
- Traffic Control Program (Safety function: provide restrictions on where and how heavy vehicles can travel)
- Transfer Control Program (Safety function: provides confirmation that the transfer line system configuration and integrity is appropriate for the transfer)

For the event that occurs while portions of the HAW transfer line are exposed for maintenance activities or other abnormal activities, the following controls were selected:

- Transfer Control Program (Safety function: AC requiring that specific controls be developed and in place for transfer operations while the HAW transfer line is temporarily exposed)
- Event Response Program (Safety function: AC requiring workers to perform the appropriate response to reduce their exposure and contamination potential)

TRANSFER LINE NATURAL PHENOMENA EVENT

This event is a breach and loss of confinement of the HAW transfer line as a result of a NPH. Because the entire line is located underground, the only NPH event that poses a hazard is an earthquake (Event TL-7-002). This event results in “High” unmitigated radiological consequences to the FW and “Moderate” unmitigated consequences to CW.

Selected Controls

The control set for the seismic event includes one Safety Significant preventive engineered control requiring that the HAW transfer line be seismically qualified. This control prevents the breaching of the line due to a seismic event:

- HAW transfer line core pipe is seismically qualified (Safety function: prevents breaching of the line due to a seismic event) – first LOC

LOW ACTIVITY WASTE PROCESS EXPLOSION

This event (LAL-2-004a) is an explosion in the LAW evaporator resulting from the accumulation of flammable volatile organic compounds from the decomposition of organic material (Tributyl Phosphate [TBP]). This scenario results in "High" unmitigated physical consequences to the FW.

Selected Controls

Three controls were selected to prevent an explosion caused by accumulation of flammable volatile organic compounds in the evaporator. Two of the controls are engineered controls that prevent the conditions necessary for rapid decomposition of the organic compounds in the LAW evaporator. The first of these is the LAW evaporator high steam pressure interlock system; the second is the LAW evaporator high temperature interlock system. An AC (WACP) was also selected requiring that the MFFF/PDCF WAC be controlled, such that the organic content in the waste (i.e., TBP) is limited to soluble levels to preclude conditions conducive to a runaway reaction:

- LAW evaporator high steam pressure interlock system (Safety function: prevents the evaporator steam coil pressure from exceeding 25 pounds per square inch, gauge (psig), which prevents the bulk liquid temperature from exceeding that required for rapid decomposition of TBP to occur) – first LOC
- LAW evaporator high temperature interlock system (Safety function: prevents the bulk liquid temperature from exceeding 130º C, the temperature required for rapid decomposition of TBP to occur) – first LOC
- MFFF/PDCF WAC ((part of the WSB WACP SAC)Safety function: limits the organic content in waste [i.e., TBP] to levels that will not support runaway reaction) – first LOC

HIGH ACTIVITY WASTE AREA AND CEMENTATION AREA FIRES

These events are fires that start in the HAW process room or cementation area and result in the release of HAW material (Events HAL-1-001, CEM-1-001, and CEM-1-002). The causes for the events include combustible material and an ignition source in the area, or a wildland fire in which burning embers enter the facility through the air intake. The events result in a "High"

unmitigated radiological consequence to the FW and CW for the HAW fire and to the FW for the cementation fire.

The HAW process room will have limited personnel access. In addition, the HAW process room will be constructed of concrete, conductors enclosed in conduit, and noncombustible material to the maximum extent practical. Therefore, the HAW process room is designed to have a very low combustible loading. The most likely initiator for a fire large enough to release any radiological inventory from the HAW process vessels is postulated to occur during maintenance on equipment.

Plastic sheeting and other transient combustibles would likely be required for contamination control during maintenance activities on pipe or tank components in the HAW process room. This material could be ignited by hot work or other ignition sources in the HAW process room including electrical shorts or by embers sucked into the facility from an external fire.

Fires could also be initiated during normal operations (e.g., from electrical shorts on lighting or motors), but because of the low combustible loading in the HAW process room, such a fire would not likely have a sufficient intensity to cause a significant radiological release. The bounding event is the fire postulated to occur during maintenance when transient combustibles could be introduced into the HAW process room.

Fires in the cementation area may be ignited by hot work or other ignition sources including electrical shorts or by embers sucked into the facility from an external fire. These fires may progress to include the entire cementation area inventory.

High Activity Waste Process Room Fire (Event HAL-1-001)

For Event HAL-1-1, it is postulated that an incipient fire progresses to the point that the process solutions in the vessels are heated to boiling. The boiling action entrains radiological material that is swept into the PVVS and ultimately out the WSB stack. In this unmitigated scenario, no credit is taken for inline PVVS demisters, the High Efficiency Particulate Air (HEPA) filters, or elevated releases from the stack. Further, because the process room sections are only separated by partitions extending halfway to the ceiling, it is conservatively assumed that the entire HAW process may be involved as the fire progresses.

The HAW process room event results in a “High” unmitigated radiological consequence to the CW.

Selected Controls

The HAW area design, which includes a fire barrier to prevent fire propagation into or out of the HAW area, prevents the spread of fires. The fire suppression system is credited with controlling any fire (excluding a post-seismic fire) that occurs in the area before liquids in the vessels are significantly heated. The Fire Protection Program acts to reduce the frequency and intensity of potential fires by minimizing combustibles in the HAW process room and assures that an adequate fire water supply is available for the suppression system to function properly. The

Event Response Program is credited with having the workers evacuate the area of the fire. The Inventory Control Program is credited with limiting the MAR to the quantity assumed in the evaluation. These controls are sufficient to protect the workers.

- HAW area fire barrier (Safety function: prevents fire outside the HAW area from propagating into the HAW area and involving additional MAR) – first LOC
- Fire Protection Program (Safety function: minimizes transient combustibles and ignition sources in the HAW area) – first LOC
- Inventory Control Program (Safety function: limits the quantity of radioactive MAR) – first LOC
- HAW area fire suppression system (Safety function: mitigates a fire such that a significant release does not occur) – first LOC
- Fire Protection Program (Safety function: assures that an adequate water supply is available for the suppression system to function properly)
- Fire Protection Program (Safety function: prohibits flammable liquid and gas storage in the HAW process room)
- Event Response Program (Safety function: worker performs appropriate response)

<u>High Activity Waste Cementation Area Fires (Events CEM-1-001 and CEM-1-002)</u>

As the fire progresses, the process solution in the drum(s) is heated to boiling. The boiling action entrains radiological material that is released.

The HAW cementation area event that occurs outside of the cementation enclosure results in a "Moderate" unmitigated consequence to the CW and "High" to the FW. The HAW cementation area event that occurs inside the cementation enclosure results in a "Low" unmitigated consequence to the CW.

<u>Selected Controls</u>

For these events (CEM-1-001 and CEM-1-002), the Event Response Program is credited with having the workers evacuate the area of the fire. In addition, the Inventory Control Program is credited with controlling the MAR to the quantities evaluated. In the HAW cementation area, fires that occur outside of the enclosure (Event CEM-1-001), the room fire suppression system is credited with controlling any fire (excluding a post-seismic fire) that occurs in the area before a significant release occurs. The Fire Protection Program was credited with assuring that adequate fire water supply is available for the fire suppression system to function properly. Additional protection is provided for the CW by the fire suppression system and cementation area fire barrier walls to reduce the consequences from "Moderate" to "Low". These controls are sufficient to protect the FW:

- Inventory Control Program (Safety function: limits the quantity of radiological MAR) – first LOC

- Event Response Program (Safety function: worker performs appropriate response) – first LOC
- Cementation area fire suppression system (Safety function: mitigates a fire such that a significant release does not occur)
- Fire Protection Program (Safety function: assures adequate water supply is available for the suppression system to function properly)
- Cementation area fire barrier (Safety function: prevents fire outside the cementation area from propagating into the cementation area and involving additional MAR)

HIGH ACTIVITY WASTE PROCESS EXPLOSION

These events involve an explosion in the HAW evaporator, HAW vessels, or any HAW liquid process line.

High Activity Waste Evaporator (Events HAL-2-004a and HAL-2-006)

The events associated with an explosion in the HAW evaporator result in a "High" unmitigated radiological consequence to the FW and the CW and "High" physical consequences to the FW.

Selected Controls

Three controls were selected to prevent an explosion caused by accumulation of flammable volatile organic compounds in the evaporator. Two of the controls are engineered controls that prevent the conditions necessary for decomposition of the organic compounds in the HAW evaporator. The first of these is the HAW evaporator high steam pressure interlock system; the second is the HAW evaporator high temperature interlock system. An AC was also selected requiring that the MFFF/PDCF WAC be controlled, such that the organic content in the waste (i.e., TBP) is limited to soluble levels to preclude conditions conducive to a runaway reaction:

- HAW evaporator high steam pressure interlock system (Safety function: prevents the HAW evaporator steam coil pressure from exceeding 25 psig, which prevents the bulk liquid temperature from exceeding that required for rapid decomposition of TBP to occur) – first LOC
- HAW evaporator high temperature interlock system (Safety function: prevents the HAW evaporator bulk liquid temperature from exceeding 130º C, the temperature required for rapid decomposition of TBP to occur) – first LOC
- MFFF/PDCF WAC ((part of the WSB WACP SAC)Safety function: limits the organic content in waste [i.e., TBP] to levels that will not support runaway reaction) – first LOC

For the hydrogen explosion, two preventive engineered controls and a preventive AC were selected as a first LOC. The first engineered control is the HAW PVVS which maintains the flammable gas concentration below 25% of the LFL by providing sufficient air flow through the HAW evaporator when required. The HAW PVVS is designed to function following all credible

events including NPH events and fires. The second engineered control is the physical design of the evaporator, which protects the liquid and headspace volume assumptions used in the hydrogen generation rate and time to LFL calculations (Ref. 11). The AC is the WACP SAC, which also protects the assumptions used in the calculation of hydrogen generation rates and time to LFL calculations. The diesel generator is credited as a second LOC with providing electric power to the PVVS if power from the primary supply is not available. The Safety Significant preventive controls are robust enough to prevent the event from occurring:

- HAW PVVS (Safety function: maintain flammable gas concentration below 25% of the LFL.) – first LOC
- HAW evaporator design (Safety function: protect headspace volume to values used in the hydrogen generation rate and time to LFL calculations) – first LOC
- WACP (Safety function: protect the radionuclide content assumptions used in the calculation of hydrogen generation rates and time to LFL) – first LOC
- Diesel Generator (Safety function: provide electrical power to active Safety Significant controls when power is not available from the primary electric power supply)

<u>High Activity Waste Vessels (Event HAL-2-005)</u>

The events associated with an explosion in the HAW vessels result in a "High" unmitigated radiological consequence to the FW and the CW.

<u>Selected Controls</u>

For the event involving an explosion in a HAW vessel, two preventive engineered controls and a preventive AC were selected as a first LOC. All HAW vessels include a design feature to maintain a minimum of one foot head space to protect assumptions in the time to LFL calculation (Ref. 28). The other engineered control consists of the HAW PVVS which maintains the flammable gas concentration below 25% of the LFL by providing sufficient air flow in the HAW vessels. The HAW PVVS is designed to function following all credible events including NPH events and fires. The AC is the WACP SAC, which protects the assumptions used in the calculation of hydrogen generation rates and time to LFL calculations. The diesel generator is credited as a second LOC with providing electric power to the PVVS if power from the primary supply is not available:

- HAW PVVS (Safety function: maintain flammable gas concentration below 25% of the LFL) – first LOC
- WACP (Safety function: protect the radionuclide content assumptions used in the calculation of hydrogen generation rates and time to LFL) – first LOC
- HAW vessel design (Safety function: maintain a minimum head space of one foot to protect assumptions used in the time to LFL calculation) – first LOC

- Diesel Generator (Safety function: provide electrical power to active Safety Significant controls when power is not available from the primary electric power supply)

High Activity Waste Liquid Process Line (Event HAL-2-007)

The CHA identified an event involving an explosion resulting from the buildup of hydrogen in a HAW liquid process line. This event occurs when hydrogen accumulates due to radiolysis in stagnant process piping. Hydrogen tends to accumulate in high points and dead legs of piping, resulting in an explosion hazard. In the unlikely event that accumulated hydrogen is subjected to an ignition source, the resulting explosion could result in the release of radiological material as well as physical injuries to workers in the vicinity due to flying debris. The worst case would be if the explosion occurred at the start of a transfer and the entire contents of the transfer (assumed to be the maximum inventory of a single vessel) are spilled following the explosion. The event involving an explosion resulting from the buildup of hydrogen in a HAW liquid process line resulted in "High" unmitigated radiological consequences to the FW and "Moderate" consequences to the CW.

Selected Controls

Six Safety Significant mitigative engineered controls and one mitigative AC were selected. Piping, valves, and other components of the HAW piping system in the HAW process room are designed to withstand the pressure of a hydrogen detonation without fragmentation. The HAW cementation transfer line is a jacketed line that is designed to withstand the pressure of a hydrogen detonation without compromising the integrity of the jacket. The HAW process room ventilation system (including the HEPA filters) is credited to confine any material released to the process room and protect anyone located outside of the process room. The diesel generator is credited with providing electric power to the HAW process room ventilation system if power from the primary supply is not available. The HAW sample line is credited with not failing in a manner that will compromise the containment function of other lines. Lastly, the Event Response Program will require the worker to perform appropriate responses (i.e., evacuate) if a radiological release is detected.

- HAW process room ventilation system (Safety function: provide filtration of airborne hazardous material) – first LOC
- HAW cementation transfer line core pipe (Safety function: will not fail in a manner that compromises the confinement function of the jacketed line) – first LOC
- Process lines, valve, and vessels (Safety function: the HAW sample line will not fail in a manner that compromises the containment function of other lines) – first LOC
- Process lines, valves, etc. inside the HAW process room (Safety function: protects the facility worker by not fragmenting and causing physical injury)
- Diesel Generator (Safety function: provide electrical power to active Safety Significant controls when power is not available from the primary electric power supply)

- HAW cementation transfer line jacket (Safety function: contain leaks and directs them to a collection point)
- Event Response Program (Safety function: ensure that workers perform the appropriate response)

Fluidic Pump Charge Vessel Explosion (Event HAL-2-008)

The CHA identified an event in which hydrogen builds up in a fluidic pump charge vessel causing an explosion that, in the unmitigated scenario, can damage SSCs that provide confinement resulting in a radionuclide release. This event occurs when hydrogen accumulates due to radiolysis in a stagnant charge vessel. The unmitigated consequences of this event are based on the Trinitro Toluene (TNT) equivalent model described in Reference 29 and the volumes of the charge vessels, which range up to 400 liters in size. The unmitigated consequences are "High" to the FW and "Moderate" to the CW.

Selected Controls

Three Safety Significant mitigative engineered controls were selected. The charge vessels are designed such that they will not fail in a manner that will cause the failure of the HAW process vessels. Second, the HAW process vessels will contain the pressure spike generated by a detonation inside a charge vessel. Analysis of the response of these systems to detonations is provided in Reference 30. The HAW PVVS is credited with providing confinement for any airborne radioactive material resulting from the explosion:

- Fluidic transfer pump charge vessels (Safety function: the vessel will not fail in a fashion the will cause failure of the HAW process vessels) – first LOC
- HAW process vessels (containing fluidic pumps) and attached piping (Safety function: survive the pressure spike generated by a detonation in the charge vessel) – first LOC
- HAW PVVS (Safety function: provides confinement for any airborne radioactive material resulting from the explosion) – first LOC

HIGH ACTIVITY WASTE LOSS OF CONFINEMENT

These events involve spills of HAW solution due to a loss of the confinement provided by HAW process lines and by the 55-gallon drums containing HAW in the cementation area. This would include the HAW transfer lines (portion of transfer line that may be in the facility), HAW process room piping, HAW cementation transfer line, HAW vessels, HAW evaporator, etc. (HAL-3-001, HAL-3-002, HAL-3-003, HAL-3-003a, HAL-3-003b, HAL-3-004, HAL-3-005, HAL-3-006, HAL-3-007, HAL-3-008, HAL-3-009, HAL-3-010, HAL-3-011, CEM-3-001, CEM-3-002, CEM-3-003, CEM-3-004, and CEM-3-005). The resulting radiological consequences from the spill of HAW material are significant to the FW and the CW. The MAR associated with the events within this scenario vary from 15 gallons of bottoms, up to the entire inventory of the worst case HAW vessel. However, even at the lowest MAR within this scenario,

the result is a "High" unmitigated radiological consequence to the FW and "Low" unmitigated radiological consequences to the CW. The majority of events within this scenario result in a "High" unmitigated radiological consequence to the FW and a "Moderate" unmitigated consequence to the CW. The worst case (HAL-3-003a) results in a "High" unmitigated radiological consequence to the FW and a "High" unmitigated consequence to the CW.

Selected Controls

For Event HAL-3-001, where HAW solution leaks from the HAW cementation transfer line as a result of maintenance activity or damage from facility equipment used in the area, a Safety Significant preventive control was selected. This control requires the transfer line to run through a chase, which protects the line from impact. In addition, the Event Response Program was credited as a mitigative control providing an addition level of protection:

- Transfer line runs through a pipe chase (Safety function: protects the line from impact) – first LOC
- Event Response Program (Safety function: ensures that workers perform appropriate response)

For Event HAL-3-002, where HAW solution leaks from the HAW cementation transfer line as a result of erosion/corrosion of the piping, a combination of Safety Significant preventive and mitigative controls were selected. The jacketed line is a credited engineered feature that acts as confinement for the solution. The core pipe is the primary confinement boundary and acts to prevent a release. The core pipe is complimented by the Structural Integrity Program to protect its integrity. For an additional LOC, mitigative features were credited. The transfer line jacket is credited to contain any leaks from the core pipe in the line as well as the Radiological Protection Program and the event response procedures to monitor radiological conditions and ensure that affected workers respond appropriately:

- HAW cementation transfer line core pipe (Safety function: contains HAW material) – first LOC
- HAW cementation transfer line jacket (Safety function: contains leaks and directs them to a collection point) – first LOC
- Structural Integrity Program (Safety function: requirements to ensure that the integrity of the HAW cementation transfer line core pipe and jacket is maintained)
- Radiological Protection Program (Safety function: monitor radiological conditions and specify appropriate response)
- Event Response Program (Safety function: ensure that workers perform the appropriate response)

For events involving leaks and spills from the vessels and piping in the HAW process room (HAL-3-003, HAL-3-003a, HAL-3-003b, HAL-3-004, HAL-3-005, and HAL-3-011), a set of Safety Significant mitigative controls to reduce the consequences to the FW were selected. Preventive controls were identified for this event; however, because a control set based on these

controls would not be considered a "robust preventor," the mitigative control strategy was credited.

The process room walls and stainless steel liner act to confine the spilled liquid in the immediate area. The HAW process room ventilation system provides confinement of any airborne material in the process room protecting FWs outside of the process room. The diesel generator will provide electric power to the HAW process room ventilation system if power from the primary supply is not available. The Radiological Protection Program and the event response procedures monitor radiological conditions and ensure that affected workers respond appropriately. In addition, for events involving overfilling the HAW tanks, the overflow lines on the HAW tanks are credited as a preventive control:

- Process room walls and stainless liner (Safety function: contains spill to immediate area) – first LOC
- HAW process room ventilation system (Safety function: provides filtration of airborne hazardous material) – first LOC
- Overflow lines on the HAW vessels connected to overflow tank (Safety function: contains spills) – first LOC
- Diesel Generator (Safety function: provide electrical power to active Safety Significant controls when power is not available from the primary electric power supply)
- Radiological Protection Program (Safety function: monitor radiological conditions and specify appropriate response)
- Event Response Program (Safety function: ensure that workers perform the appropriate response)

Leaks that occur outside of the process room, either from the portion of the sample lines outside of the sample glovebox or inside the sample glovebox, present the risk of a "High" consequence to the FW. In addition to the jacketed sample lines, which were chosen as the first LOC for this event, the CHAP team chose the Radiological Protection Program and the event response procedures to monitor radiological conditions and ensure that affected workers respond appropriately.

For the events involving leaks and spills from the HAW sampling lines (HAL-3-006, HAL-3-007, and HAL-3-008), a set of Safety Significant mitigative controls is credited to reduce the consequences to the FW. In the case of a leak from the portion of the sample lines that are on the process room side of the wall, the lines are jacketed and will direct spills back to the lined portion of the process room. The jacket is an open sleeve that requires no monitoring or leak detection. The consequences of the spill are then mitigated by the set of controls previously discussed for the other process room spills.

Leaks that occur outside of the process room, either from the portion of the sample lines outside of the sample glovebox or inside the sample glovebox, present the risk of a "High" consequence to the FW. In addition to the jacketed sample lines, which were chosen as the first LOC for spills

outside the glovebox (Events HAL-3-006 and HAL-3-007), the Radiological Protection Program and the event response procedures are credited with monitoring radiological conditions and ensuring that affected workers respond appropriately.

The sample lines are located in the area between the wall and glovebox. Therefore, in the unmitigated scenario, if a leak were to develop, it may not be detected for a significant period of time. Because the sample lines are low flow, monitoring for potential leaks would provide ample time to respond before the release would result in "High" consequences. For a spill inside the HAW process room (Event HAL-3-006), the HAW area walls and liner were credited with containment of the spilled HAW material. For a spill inside the glovebox, the glovebox enclosure and glovebox ventilation are also credited with the function of preventing the splashing of liquid directly in the face of the worker and the release of airborne material.

- Sample lines jacket (Safety function: directs leaks back to HAW process room) – first LOC
- HAW process room ventilation (Safety function: provides filtration of airborne hazardous material that is released in the process room) – first LOC
- HAW area design and construction (Safety function: HAW area walls and stainless steel liner limit consequences to the FW from spills by containing HAW material) – first LOC
- Diesel Generator (Safety function: provide electrical power to active Safety Significant controls when power is not available from the primary electric power supply)
- Radiological Protection Program (Safety function: monitor radiological conditions and specify appropriate response)
- Event Response Program (Safety function: ensure that workers perform the appropriate response)

For the HAW cementation area events in which the spill is caused by impact of the overhead crane with the cementation enclosure (CEM-3-005) or is caused by a release from a drum outside the cementation enclosure (CEM-3-004), a mitigative control is credited to reduce the consequences to the FW. This control is the emergency response program, which reduces the consequences by having the FW relocate to an area in which personel exposures are reduced.

- Event Response Program (Safety function: ensure that workers perform the appropriate response) – first LOC

For events involving leaks and spills in the HAW cementation area and the release of airborne material during cementation operations (CEM-3-001, CEM-3-002, and CEM-3-003), a combination of Safety Significant preventive and mitigative controls are credited to reduce the risk to the FW. For releases from the HAW cementation transfer line entering the enclosure, the jacketed line is a credited engineered feature that acts as confinement for the solution. The core pipe is the primary confinement boundary and acts to prevent a release. The core pipe is complimented by the Structural Integrity Program to protect its integrity and by the transfer line jacket that contains any leaks. For events resulting in releases from the HAW cementation enclosure, the HAW cementation enclosure and the HAW cementation enclosure ventilation system are credited to provide confinement of released material if the spill occurs inside the

enclosure. The Radiological Protection Program and the Event Response Procedures monitor radiological conditions and ensure that affected workers respond appropriately to these events.

- Jacketed transfer line (core pipe and jacket) from the HAW process room to the HAW cementation enclosure (Safety function: contains leaks and directs them to a collection point) – first LOC
- HAW cementation enclosure (Safety function: contains spill to the immediate area) – first LOC
- HAW cementation enclosure ventilation system (Safety function: provides filtration of airborne hazardous material) – first LOC
- Structural Integrity Program (Safety function: requirements to ensure that the integrity of the HAW cementation transfer line core pipe and jacket is maintained)
- Radiological Protection Program (Safety function: monitor radiological conditions and specify appropriate response)
- Event Response Program (Safety function: ensure that workers perform the appropriate response)

For Event HAL-3-009, where the HAW evaporator steam coil leaks HAW solution into the steam system external to the process room as a result of corrosion or failure of the coils and loss of pressure on the coils, an AC requires that the integrity of the coils be verified prior to each evaporator run, which prevents the HAW liquid from entering the steam loop, was credited. This verification will include a pressure check on the steam coils prior to the introduction of HAW solution to the evaporator any time they have been depressurized. In addition, this AC requires that the chemical composition of the steam be adjusted to minimize corrosion.

- Evaporator steam coil integrity protection (Safety function: prevents HAW liquid from leaking into the steam system by verifying the steam coil integrity has not been compromised prior to operation of the steam system) – first LOC

- Evaporator steam coil integrity protection (Safety function: prevents HAW liquid from leaking into the steam system by controlling the corrosion-related chemistry of the steam) – first LOC

For Event HAL-3-010, the postulated scenario was a leak in the cooling coils resulting in release of HAW solution into the cooling coil system external to the process room. Because the cooling coil utilizes three independent loops between the evaporator and chiller, this event was determined to have a “Low” consequence to the FW and Negligible consequences to all other receptors. Because the design of the cooling coil was considered as an initial condition in the event analysis, the cooling coil design was considered to be a Safety Significant design feature as follows:

- Cooling coil design (Safety function: prevents radioactive solution from contaminating cooling water) – initial condition

CONTAMINATION/EXPOSURE EVENTS

These event types all result in skin puncture and radiological contamination while handling HAW material in the sampling glovebox, waste packaging areas of the WSB, and the WSB laboratory (LAB-4-003, WH-4-002, and HAL-4-001). The causes for the events include operator error, broken glass, using hands to compress trash, improper use of tools, etc. All of these events result in a "High" unmitigated radiological consequence to the FW and "Negligible" unmitigated radiological consequences to the CW.

Selected Controls

The Radiological Protection Program is credited as the primary control for worker protection for direct radiation exposure and contamination. The Radiological Protection Program, as appropriate, prescribes equipment including PPE, to prevent the high radiation exposure and personnel uptakes. Further, the radiolgocial protection program is credited with specifying the appropriate worker protection controls to be implemented while handling radiological waste and samples including appropriate monitoring of radiological conditions and appropriate responses.

- Radiological Protection Program (Safety function: procedures and equipment [e.g., needle shroud, leather gloves, tools for changing needles] prevent the needle from contacting hands) – first LOC

- Radiological Protection Program (Safety function: specifies the appropriate worker protection controls while handling radiological waste or laboratory samples including monitoring of radiological conditions and appropriate responses) – first LOC

FACILITY FIRE

These events apply to a fire event that can potentially propagate to include the entire WSB facility and results in the release of the entire HAW and LAW inventory (Event FW-1-001). The causes for the event include combustible material and an ignition source internal to the facility, or an externally initiated fire such as a wildland fire in which burning embers enter the facility through the air intake. The event results in a "High" unmitigated radiological consequence to the FW and the CW.

Selected Controls

Both engineered controls and ACs were selected to provide for worker protection for this event. The Fire Protection Program acts to reduce the frequency and intensity of potential fires by reducing combustibles in the HAW process room. The HAW area design, which includes a fire barrier to prevent fire propagation into the HAW process room, prevents the spread of fires. In the highly unlikely event that a fire affects the HAW process room, the HAW area fire suppression system is credited with mitigating any fire such that a significant release does not occur. In the worst case, this event has the same result as Event HAL-1-001. The more likely scenario is that the fire will propagate to involve inventories located outside of the HAW process room. The Event Response Program requires workers to evacuate the area of the fire, thus,

reducing the consequences to the FW. The Inventory Control Program is credited with limiting the radionuclide inventory outside of the HAW process room and the HAW cementation area to quantities used in the hazard and accident analysis.

The largest inventory outside the HAW area fire barriers is in the cementation area. The cementation area fire suppression system is credited with protecting this inventory. The remainder of the building contains the LAW inventory, the laboratory sample inventory, and limited job control waste inventory. The CHA reported that the consequences of involving this material in a fire do not challenge evaluation criteria; therefore, no additional Safety Significant controls are required.

- HAW area fire barrier (Safety function: prevents fire outside the HAW area from propagating into the HAW area and involving additional MAR) – first LOC
- Cementation area fire barrier (Safety function: prevents fire outside the cementation area from propagating into the cementation area and involving additional MAR) – first LOC
- HAW PVVS (Safety function: provides confinement of airborne hazardous material) – first LOC
- HAW area fire suppression system (Safety function: mitigates fire such that a significant release does not occur)
- Cementation area fire suppression system (Safety function: mitigates a fire such that a significant release does not occur)
- Fire Protection Program (Safety function: assures that an adequate water supply is available for the suppression system to function properly)
- Fire Protection Program (Safety function: minimize the combustibles in the HAW process room)
- HAW PVVS has dual trains separated by fire barriers (Safety function: allows PVVS filters to continue operating)
- Event Response Program (Safety function: worker performs appropriate response)
- Inventory Control Program (Safety function: limits the MAR to quantities that were assumed during the hazard and accident analyses) – initial condition

FACILITY WIDE EXTERNAL EVENTS

The results in this section apply to external events impacting the entire WSB facility and result in the release of the entire HAW and LAW inventory (Events FW-6-001 and FW-6-003). These two events are caused by a helicopter or small airplane crash with resulting fire (Event FW-6-001) or heavy construction operations around the WSB facility (Event FW-6-003). Wildland fires have been included with the fire events because the control sets associated with the wildland fires and other fire scenarios are similar. These events result in a “High” unmitigated radiological consequence to the FW and the CW and “Low” to “Moderate” unmitigated radiological consequences to the offsite public.

Selected Controls

For Event FW-6-001, it has been shown that it is incredible for a small aircraft to impact the area of the WSB containing the highest activity material (the HAW area as shown in Figure 3.3-1), based upon the footprint (Ref. 31). The fire barrier surrounding the HAW area will prevent a fire from a crash into other areas of the building from involving material in the HAW area. The inventory outside of the HAW area is at levels that do not challenge guidelines for the CW.

Five Safety Significant mitigative controls for Event FW-6-001 were credited to reduce the consequences to the FW and CW:

- HAW area fire barrier (Safety function: limits the consequences of a fire starting outside of the HAW area by reducing the affected MAR and protects the HAW PVVS) – first LOC
- Cementation area fire barrier (Safety function: limits the consequences of a fire starting outside of the cementation area by reducing the affected MAR and protects the HAW PVVS) – first LOC
- HAW PVVS (Safety function: HAW PVVS external duct continues to provide a flowpath for dilution air following external events) – first LOC
- Inventory Control Program (Safety function: ensures that theradiological inventory outside the HAW area is at levels assumed in the hazard and accident analysis) – first LOC
- Event Response Program (Safety function: worker evacuates area)
- Radiological Protection Program (Safety function: monitor radiological conditions and specify appropriate response)

For Event FW-6-003, two Safety Significant preventive ACs were selected to protect workers. They include a program for controlling the area surrounding the WSB to prevent unanalyzed events initiated by construction or maintenance activities around the facility. In addition, the WSB ventilation stack must be constructed such that it will not fail in a manner that would compromise a credited control. A Hoisting and Rigging Program was also chosen as a Safety Significant AC, which requires evaluation for the use of cranes adjacent to WSB facility for related operations:

- Site Work Control Program (Safety function: prevents external impacts to WSB that could result in a release) – first LOC
- WSB ventilation stack (Safety function: will not fail in a manner that compromises the Safety functions of credited controls) – first LOC
- Hoisting and Rigging Program (Safety function: requires evaluation for the use of cranes adjacent to facility)

For Event FW-6-004, a single Safety Significant preventive AC, which will be robust enough to prevent the event from occurring, was selected. This control is the Traffic Control Program, which will be a program for controlling the area adjacent to the HAW process area exterior wall

to prevent an energetic collision between a vehicle (specifically, a fuel delivery truck) and the HAW process area exterior wall:

- Traffic Control Program (Safety function: prevents a breach of the HAW process room exterior wall by preventing a high-speed vehicular impact) – first LOC

FACILITY-WIDE NATURAL PHENOMENA EVENTS

The results in this section apply to NPH events impacting the entire WSB facility and resulting in the release of the entire HAW and LAW inventory (Events FW-7-001, FW-7-002, FW-7-003, and FW-7-004). The causes for the events include a tornado and an earthquake. The postulated seismic event may result in a spill of solutions in the facility, a fire in the facility, or initiate a string of events that could result in a HAW vessel explosion due to the buildup of hydrogen due to the loss of dilution flow.

All seismic related NPH events result in a "High" unmitigated radiological consequence to the FW. With the exception of Event FW-7-003, these events also result in a "High" consequence to the CW. Because the HAW inventory is not involved in the post-seismic fire, the consequence to the CW in this event would be "Low." The events have estimated "Low" or "Moderate" (for the explosion following earthquake) unmitigated radiological consequences to the offsite public. The unmitigated tornado event (FW-7-001), takes credit for the PC-3 WSB construction as an initial condition design feature with protecting the HAW process vessels and cementation inventory from tornado, straight winds, and missiles. This causes the MAR to include only materials outside of these areas (i.e., LAW inventory, TRU waste inventory, etc.). These inventories are limited by the Inventory Control Program. The resulting unmitigated radiological consequences for the tornado event are "Low" to the FW and CW and "Negligible" to the offsite public.

Selected Controls

For the seismic events followed by a spill and a seismic event followed by an explosion (Events FW-7-002 and FW-7-004), a number of Safety Significant mitigative controls to reduce the consequences to the FW and CW were selected. The majority of the chosen controls were engineered controls crediting the seismically qualified design of various WSB components. The HAW PVVS is qualified to PC-3+ seismic criteria and functions to provide dilution flow in the vessels following a seismic event to prevent hydrogen accumulation; thereby, preventing explosions. The CHA (Ref. 4) shows that when credit is taken for the seismically qualified HAW vessels and piping to contain the HAW solution following a seismic event, the potential consequences are reduced well within evaluation criteria to the CW at 100 meters.

- HAW process vessels and piping are seismically qualified (Safety function: prevents a spill of HAW material during an event that meets PC-3+ seismic criteria) – first LOC
- WSB building structure (Safety function: maintains its structural integrity during events that meet PC-3+ seismic criteria to protect safety SSCs) – first LOC

- HAW Area design and construction (Safety function: fire barrier around the HAW Area limits the consequences of a fire starting outside the HAW process rooms by reducing the impact on the MAR during an event that meets PC-3+ seismic criteria) – first LOC
- HAW Area design and construction (Safety function: fire barrier around and between the two PVVS trains prevents fires from propagating into or between the duplicate PVVS rooms and SSCs during an event that meets PC-3+ seismic criteria) – first LOC
- HAW transfer line to cementation area is seismically qualified (Safety function: prevents a spill of HAW material during an event that meets PC-3+ seismic criteria) – first LOC
- HAW sample lines are seismically qualified (Safety function: prevents a spill of HAW material during an event that meets PC-3+ seismic criteria) – first LOC
- HAW PVVS is seismically qualified (Safety function: prevents the release of airborne hazardous material and continues to function during and after an event that meets PC-3+ seismic criteria) – first LOC
- HAW PVVS is seismically qualified (Safety function: provides a dilution flow to maintain the flammable gas concentration below 25% of the LFL and preventa a release of airborne hazardous material during and after an event that meets PC-3+ seismic criteria) – first LOC
- Steam coils and cooling coils inside vessels are seismically qualified (Safety function: prevents the release of HAW material outside vessels during an event that meets PC-3+ seismic criteria) – first LOC
- HAW process room ventilation system (Safety function: provides for passive confinement of airborne hazardous material in the HAW process room during an event that meets PC-3+ seismic criteria)
- Inventory Control Program (Safety function: limits the quantity of radiological MAR for release) – first LOC

Large post-seismic fires in areas designed with low combustible loads and isolated by seismically qualified fire barriers such as the HAW area (Event FW-7-005) are addressed as BDBAs. The HAW process room will contain insufficient combustible material to support a major fire during typical operating conditions, and there are no high voltage power sources, flammable liquids, or flammable gases which are the typical causes of post seismic fires. In addition, the facility exterior walls and fire barrier walls between the HAW area and other WSB fire areas will be qualified to PC-3+ seismic criteria, which will limit the spread of post-seismic fires.

For a seismic event followed by a fire (Events FW-7-003 and FW-7-005), a number of Safety Significant mitigative controls to reduce the consequences to the FW and CW were selected. Controls credited to limit the consequences include a limit on the amount of HAW solution allowed in the HAW cementation process and fire barriers to limit the spread of fires. To ensure the continued operation of the HAW PVVS, it has two trains separated by PC-3+ seismically qualified fire barriers to prevent a fire in any single fire area from rendering it inoperable:

- WSB building structure (Safety function: maintains its structural integrity during an event that meets PC-3+ seismic criteria to protect safety SSCs) – first LOC
- Seismically qualified fire barrier around the HAW area (Safety function: prevents a fire outside of the HAW area from propagating into the HAW area and involving additional MAR) – first LOC
- Seismically qualified fire barrier around cementation area (Safety function: prevents a fire outside of the cementation area from propagating into the cementation area and involving additional MAR)
- HAW PVVS is seismically qualified (Safety function: mitigates the release of airborne hazardous material and continues to function during and after an event that meets PC-3+ seismic criteria) – first LOC
- HAW PVVS has dual trains separated by seismically qualified fire barriers (Safety function: allows PVVS filters to continue operating) – first LOC
- Fire Protection Program (Safety function: combustible controls reduce the frequency and intensity of fires) – first LOC
- Inventory Control Program (Safety function: limits the quantity of radiological MAR for release) – first LOC
- Event Response Program (Safety function: reduces worker exposure and contamination potential)

3.3.3 ENVIRONMENTAL PROTECTION

The primary environmental concern with respect to the WSB is the release of radionuclides to the environment. The hazard analysis documented in the CHA (Ref. 4) identifies release pathways in which radionuclides could be released and adversely impact the public, site worker, and the environment. The potential for large material releases is minimized by the design and administrative features that contribute to the DID of the WSB. These design features and administrative features protect the public, site worker, and the environment and are discussed in the DID section (Section 3.3.2.3.2). It is appropriate to note that, although there have been no specific accident EGs developed for the environment in DOE-STD-3009-94 (Ref. 2), protection of the public and the site worker as discussed in previous sections also provides de facto protection of the environment. Thus, each of the design and administrative features that contributes to DID also contributes to environmental protection.

The location of the WSB in an area where the topography is conducive to minimizing the possibility of water intrusion to the building (design feature) also contributes to environmental protection.

As a result of the above design features and the DID discussion, design and operational controls are in place to prevent large releases that could cause significant environmental damage.

3.3.4 ACCIDENT SELECTION

Based on the unmitigated hazard analysis, no hazardous events had sufficiently high-risk estimates that they challenged or approached offsite EGs and represent situations of major concern. Therefore, no unique hazardous events require accident analysis. However, as required by DOE-STD-3009-94 (Ref. 2), representative and bounding accidents from each accident type (e.g., fire, explosion, spill, etc.) were selected for accident analysis unless the bounding consequences were "Low" to the public. Table 3.3-8 identifies and provides additional detail on which hazardous events are designated as DBAs and further evaluated in the accident analysis (Section 3.4).

Large post-seismic fires in areas designed with low combustible loads and isolated by seismically qualified fire barriers such as the HAW process room are addressed as BDBA (Ref. 32). The HAW process room will contain insufficient combustible material to support a large fire during typical operating conditions, and there are no high voltage power sources, flammable liquids, or flammable gases which are the typical causes of post-seismic fires. In addition, the facility exterior walls and fire barrier walls between the HAW area and other WSB fire areas will be qualified to PC-3+ seismic criteria, which will prevent fires that start in other facilities or other areas of the WSB from propagating into the HAW area. Therefore based on an evaluation by the hazards analysis team, the probability of a seismically induced fire involving the WSB HAW rooms is sufficiently below the initiation frequency for a PC-3 seismic event that it does not warrant consideration as part of the WSB DBAs but is evaluated as a BDBA. Chapter 4, Section 4.4.1.4, provides additional evaluation of barriers credited with the prevention of large fires in the HAW process room.

3.4 ACCIDENT ANALYSIS

Section 3.3 discusses the process by which potential accidents are identified for further quantitative analysis. This section describes the methodology used to analyze these accidents. The WSB was analyzed for potential radiological and chemical hazards, beginning with the development of initiating events and continuing with ST development and consequence evaluation for postulated accidents. The principal purpose of the accident analysis is to identify any Safety Class SSCs and TSRs, including SACs, needed to meet appropriate acceptance criteria to demonstrate protection of the public.

This PDSA section is also based on the following general guidance documents:

- Nuclear Safety Management, 10 CFR 830 (Ref. 7)
- Preparation Guide for U.S. Department of Energy Nonreactor Nuclear Facility Safety Analysis Reports (SARs), DOE-STD-3009-94 (Ref. 2)
- The methodology, guidance, and examples section of DOE-HDBK-3010-94, DOE Handbook on Airborne Release Fractions/Rates and Respirable Fractions for Nonreactor Nuclear Facilities (Ref. 8)

3.4.1 ACCIDENT SAFETY ANALYSIS METHODOLOGIES

This section describes the methodology used for the accident analysis of the WSB.

3.4.1.1 Scenario and Source Term Development

The basic methodology used for determining the bounding amount of hazardous material released from a facility to the atmosphere is based on techniques described in DOE-HDBK-3010-94 (Ref. 8), which summarizes the experimental data related to airborne radionuclide releases. The quantity of released, airborne, respirable material is referred to as the ST, which is defined by one of the following equations:

$$ST = MAR * DR * ARF * LPF * RF, \text{ or} \qquad \text{(Eq. 3.4-1)}$$

$$ST = MAR * DR * (ARR * t) * LPF * RF \qquad \text{(Eq. 3.4-2)}$$

where:

MAR = Material At Risk - The amount of radioactive or hazardous material present in a discrete physical location that is separated from other radionuclide or hazardous material-bearing areas by adequate distance or physical barriers so that the areas do not interact during postulated accident conditions.

The units of MAR are discussed later in this section. The next six factors are ratios or fractions; they have no units (except for Airborne Release Rate [ARR] and the release duration time [t]).

DR = Damage Ratio - The fraction of MAR impacted by the accident-generated conditions.

ARF = Airborne Release Fraction - The coefficient used to estimate the amount of a radioactive material that can be suspended in air and available for transport under a specific set of accident conditions.

ARR = Airborne Release Rate - The coefficient used to estimate the amount of a radioactive or hazardous material that can be suspended in air (per hour) by continuously acting mechanisms such as aerodynamic entrainment/resuspension.

LPF = Leak Path Factor - The fraction of airborne materials transported from containment or confinement by the existing flow through the pathway configuration under evaluation. This factor is always assumed to be one for unmitigated analysis.

RF = Respirable Fraction - The fraction of airborne particles that can be transported through the air and inhaled into the human respiratory system. These particles are commonly assumed to be 10 µm aerodynamic equivalent diameter and less. (Aerodynamic equivalent diameter is the diameter of a sphere of density 1 grams per cubic centimeter that exhibits the same terminal velocity as the particle in question.)

t = Release duration time (hours)

The selection of one of the two equations given above for the ST analysis of a specific event is based on the type of event and the nature of the release data available to characterize it. Events where the release occurs suddenly generally employ Equation 3.4-1. Events where the release occurs over an extended time, such as an evaporative release from an open pool of volatile liquid resulting from a spill, generally employ Equation 3.4-2.

The most important factors in the above equations are the DR and the combination of ARF x RF (or ARR x t x RF). The ARF, ARR, and RF are generally obtained from DOE-HDBK-3010-94 (Ref. 8).

It should be noted that not all of the factors mentioned above appear in the ST equation for each event. When the factors are not listed, a value of one is assumed.

The ARFs and RFs used for the consequence determination are determined based on the release mechanism and material form. The release mechanisms used were as follows:

- Fire – Events where the waste material is on fire or is impacted by the fire
- Explosion – Explosion events caused by the ignition of explosive gas or other rapid material reactions
- Loss of containment/confinement
- External impact/fall – Mishandling and dropping events, impacts from external sources, plus spills and leaks
- Energetic release – over-pressurization

Examples of the material forms are as follows:

- Liquid – Applicable to all solutions within the facility. Internal explosion releases are governed by the explosions' shock effects
- Combustible solids – Waste material in WSB waste containers that can burn. Examples of combustible solids are rags, paper, rubber, plastics, etc
- Cementitious solids – Liquid waste blended with dry cement and allowed to solidify

3.4.1.2 Leak Path Factor

The LPF is the fraction of the material in the aerosol transported through some confinement, deposition, or filtration mechanism. For the unmitigated accident analysis, the LPF is taken to be one.

3.4.1.3 Natural Phenomena Hazards and External Hazards

Documented Safety Analyses (DSAs) require consideration of the risks of incidents caused by natural events and externally generated manmade hazards. Natural events of interest to SRS safety analysts include high-velocity straight winds, tornadoes, earthquakes, hurricane, flood, precipitation, lightning strikes, and extreme cold or heat. The NPH standard (DOE-STD-1020-2002 [Ref. 10]) provides consistent DOE criteria for the design of new SSCs and for the evaluation, modification, or upgrade of existing SSCs, so that DOE facilities can safely withstand the previously listed NPHs. NPH and external events are specified based on the frequency of occurrence. NPH DBAs are those events with a phenomenon initiating frequency as specified in DOE-STD-1020-2002 (Ref. 10). External events are analyzed as DBAs if their frequency of occurrence is estimated to exceed 1E-06/year conservatively calculated, or 1E-07/year realistically calculated, unless the bounding consequences are "Low."

3.4.1.4 Consequence Analysis

3.4.1.4.1 RADIOLOGICAL CONSEQUENCE ANALYSIS METHODOLOGY

Radiological consequences calculated for releases of radionuclides under postulated accident conditions are estimated with Version 1.5.11.1 of the Melcor Accident Consequence Code System 2 (MACCS2) code. MACCS2 models the dispersion of radioactivity in the atmosphere from the nuclear facility and computes plume depletion effects. MACCS2 then calculates the effects of this radioactivity to downwind receptors and to the environment.

For regulatory applications, MACCS2 is used to calculate the 50-year Effective Dose Equivalent (EDE) to specified stationary receptors from the plume passage phase of a hypothetical release. The EDE is calculated for both onsite and offsite receptors using standard uptake assumptions and dose conversion database values. Sensitivity studies may also be performed with MACCS2 to show the relative benefits of evacuation, sheltering, interdiction, and the effects of various shielding assumptions.

MACCS2 predicts the dispersion of radionuclides by the use of multiple, straight-line Gaussian plumes. Although each plume treats the released material as a neutrally buoyant gas, the direction, duration, sensible heat, and initial radionuclide concentration may be varied from plume to plume. Crosswind dispersion is treated by a multi-step function, and both wet and dry depositions features can be modeled as independent processes. Meteorological variability is treated in MACCS2 with a stratified random sampling algorithm. MACCS2 uses the Latin Hypercube Sampling mode of five years of site-specific meteorological data to analyze under the random-sampling option. Based on the Latin Hypercube Sampling distribution, and application of user-specified dose and/or health effects models, complementary cumulative distribution functions are calculated for various measures of consequence. The average, median (50th percentile), 95th, and 99.5^{th} percentile doses are provided in the output.

For DSAs, the code is executed through the first and second of three modules. Air and ground concentrations, plume size, and timing information for all plume segments as a function of downwind distance are calculated in the first module. The second module calculates the consequences due to exposure to radiation during the emergency phase (first seven days) of the event. During the plume passage, doses and associated health effects are computed for inhalation from the plume, immersion or cloudshine, groundshine, deposition on the skin, and inhalation of resuspended ground contamination.

A third module, for the consequences due to exposure to radiation subsequent to the emergency phase of the postulated accident and for computing decontamination and other economic impacts incurred because of the accident, is not applied. The third module is typically applied to probabilistic safety and environmental impact analyses.

Additional inputs to MACCS2 are the surface roughness factor and meteorological conditions. The surface roughness factor is used to approximate the topography surrounding a release in the model. The analysis presented in this PDSA utilizes a surface roughness factor of 100 centimeters for both the 100 meter receptor and the MOI to represent the wooded rolling topography of SRS. A smaller surface roughness factor would have the effect of increasing calculated doses while a larger factor would reduce them. The analysis assumes the 50th percentile meteorology for the 100 meter receptor and the 95th percentile meteorology for the MOI.

The Am-241 activity is the dominant contributor to the activity of the HAW inventory and total MAR in the facility. The WSB inventory is given in the following table:

WSB Inventory Composition

Waste Stream	**Curies**											
	Am-241	**Pu-238**	**Pu-239**	**Pu-240**	**Pu-241**	**Pu-242**	**Np-237**	**U-234**	**U-235**	**U-236**	**U-238**	**Pa-233**
HAW stream	6.30E+04	1.01E+00	6.60E+00	2.37E+00	1.22E+02	4.64E-04	1.42E+00	0	5.83E-06	0	2.12E-06	1.42E+00
LAW stream	1.10E+00	2.60E-01	1.70E+00	5.40E-01	0	1.20E-04	9.60E-01	9.40E-04	6.40E-02	4.90E-06	1.02E+00	9.60E-01
Total MAR	*6.30E+04*	*1.27E+00*	*8.30E+00*	*2.91E+00*	*1.22E+02*	*5.84E-04*	*2.38E+00*	*9.40E-04*	*6.40E-02*	*4.90E-06*	*1.02E+00*	*2.38E+00*

The WSB facility inventory is normalized to Am-241, and the normalized inventory activity composition is input in the MACCS2 code. For example, there are and 6.30E+04 Ci of Am-241 and 1.01E+00 Ci of Pu-238 in the HAW inventory. The normalized HAW inventory that is input into MACCS2 includes 1.0 Ci of Am-241 and 1.60E-05 Ci of Pu-238 (1.01E+00 Pu-238 Ci/ 6.30E+04 Am-241 Ci = 1.60E-05 Pu-238 Ci per Am-241 Ci). The normalized inventory values of the other plutonium and uranium radionuclides are determined in a similar manner. The MACCS2 results thus represent the radiological dose factors associated with the normalized inventory, released as a source term, consisting of a unit curie of Am-241 plus the relative activity concentrations of uranium and plutonium radionuclides. These MACCS2 dose factors must be scaled by the Am-241 content of any postulated accident scenario source term to yield a meaningful receptor dose. This calculation is documented in Reference 33.

The HAW and LAW inventory compositions are shown in terms of isotopic activity normalized by the Am-241 activity for the particular waste stream in the following table:

Normalized WSB Inventory Composition

Waste Stream	Curies											
	Am-241	**Pu-238**	**Pu-239**	**Pu-240**	**Pu-241**	**Pu-242**	**Np-237**	**U-234**	**U-235**	**U-236**	**U-238**	**Pa-233**
HAW stream	1.0	1.60E-05	1.05E-04	3.76E-05	1.94E-03	7.37E-09	2.25E-05	0	9.25E-11	0	3.37E-11	2.25E-05
LAW stream	1.0	2.36E-01	1.55E+00	4.91E-01	0	1.09E-04	8.73E-01	8.55E-04	5.82E-02	4.45E-06	9.27E-01	8.73E-01

The output of MACCS2 will, thus, be the total unit Total Effective Dose Equivalent (TEDE) dose factors in terms of rem per curie of Am-241 released. Subsequent accident analyses will determine the STs for the various accident scenarios in terms of Am-241 released to be used in conjunction with the dose factors calculated by MACCS2 to determine receptor doses associated with the accident scenarios.

Unit TEDE dose factors in terms of rem per curie of Am-241 released are calculated in Reference 33 and summarized below for both the HAW and LAW streams. When expressed in terms of dose per curie of Am-241 released, the dose factors associated with the LAW stream are higher than the comparable dose factors associated with the HAW stream. The reason is that the contribution of Am-241 to dose overwhelms the contribution of the other radionuclides for the HAW inventory, but in contrast, other radionuclides make significant dose contribution for the LAW inventory that increases the dose per curie of Am-241 released. Changes in the waste distribution have the potential to alter these dose factors. The WACP will require verification that incoming waste constituents are below the levels assumed in the calculation or establish a mechanism to assure that the values are bounding.

Unit TEDE Dose Factors (Summary of Maximum Values)

Unit TEDE Dose Factors [rem/Curies Am-241 released]

Receptor ►		Occupationally Exposed Person (100 meters)	MOI (9.4 kilometers)
Surface Roughness ►		100 centimeters	100 centimeters
Waste Stream	Duration	50th Percentile	95th Percentile

HAW	3 minutes	2.3E+01	8.6E-02
	20 minutes	1.6E+01	5.8E-02
LAW	3 minutes	9.8E+01	3.8E-01
	20 minutes	6.7E+01	2.5E-01

3.4.1.5 Waste Solidification Building Major Inputs and Assumptions

There are two primary types of I&As: 1) those that cannot be controlled by the facility, and 2) those that can be controlled by the facility. I&As that cannot be controlled, measured, or monitored by the facility (e.g., I&As derived from handbooks and other approved documents, such as ARFs derived from DOE-HDBK-3010-94 [Ref. 8]) are incorporated by reference in the specific calculation (i.e., the calculation using the input data) or documented as an I&A but are not designated as key I&As. Key I&As are important because, in effect, they set limits and conditions on the validity of the safety analysis. I&As that can be controlled by the facility include an important subset of major safety analysis I&As. Major safety analysis I&As (also referred to as "key" I&As) are those that have the potential to significantly impact the consequence or frequency values determined by the accident analysis and can be controlled by the facility (such as inventories, process variables, and setpoints). I&As designated as major or key must be protected by TSRs and have verified implementation. Key I&As are a subset of facility-controlled I&As.

The following key I&As were used in the unmitigated accident analysis:

1. HAW area fire barrier – the Safety Significant seismically qualified fire barrier prevents a fire from propagating into or out of the HAW area following seismic events.
2. The maximum concentration of Am-241 solution is 2 grams per liter. The Safety Significant WACP will be in place for waste streams, includes WAC from the MFFF and PDCF, to ensure that the received waste is within specifications, and periodic monitoring within the WSB will ensure that the Am-241 solutions remain within 2 grams per liter. The ST is directly proportional to the Am-241 solution. Increasing the Am-241 solution increases the ST.

   MAR assumptions:

   - Total WSB inventory - 18.3 kg of Am-241
   - Inventory outside the HAW fire zone - 420 grams of Am-241 (excluding 132 drums of solidified cementatious waste produced by WSB operations). Due to the form of the waste, the temporary storage of solidified cementatious waste represents a small dose potential (Ref. 4) and is reasonable to exclude from the inventory restrictions external to the HAW fire zone.
   - Maximum inventory in HAW vessel - 6 kg of Am-241
   - Maximum of 45 grams of Am-241 per 55-gallon drum

3. The Safety Significant WSB building is constructed to NPH PC-3+ seismic criteria and PC-3 wind/tornado criteria and the Safety Significant HAW process vessels, and piping are constructed to NPH PC-3+ (seismic) criteria.

4. Cementation area fire barrier – the Safety Significant seismically qualified fire barrier prevents a fire propagating into or out of the cementation area following seismic events.

5. Organic compound concentrations in the WSB HAW and LAW feed streams will be below concentrations needed to support a red oil explosion. This assumption is based on input from the originating facilities (PDCF and MFFF) and will be protected by the WSB WACP SAC. Based on a preliminary review of solubility data onhand, the WACP limit may be as low as 20 milligrams per liter (mg/L) or as high as 300 mg/L. It is expected that TBP levels will be below the solubility point for the solutions received such that there will be no separate phase TBP present. It is recognized that the solubility of TBP decreases as acidity of solution decreases, however the only adjustment to acidity prior to the evaporators in the WSB processes are via dilution of feed which would also dilute the TBP so no separate phase will be formed. A more detailed evaluation will be performed to establish the appropriate limit on the allowable feed stream "total organic carbon" concentration. This limit will be implemented in the WSB DSA.

3.4.2 DESIGN BASIS ACCIDENTS

3.4.2.1 Operational Fires

The CHA (Ref. 4) identified several fire events that could occur during operational related activities of the WSB. No fire events represent situations of major concern that could challenge offsite EGs. However, several fire events could result in significant onsite impacts and represent situations of concern. The fire in the HAW process room (Event HAL-1-1), though not likely, represents a bounding radiological release for an operational fire accident type and was selected as the bounding fire DBA.

3.4.2.1.2 HIGH ACTIVITY PROCESS ROOM FIRE

3.4.2.1.2.1 Scenario Development

The fire in the HAW process room (Event HAL-1-1) is a large fire that occurs in the immediate vicinity of the HAW vessels. The fire is of sufficient intensity to heat the solution within the vessels to vigorous boiling.

Accident Initiators

The high activity process room has limited personnel access and is designed with a low combustible loading. The most likely initiator for a fire large enough to release radiological

inventory from the HAW receipt tanks is postulated to occur during maintenance on equipment in the HAW process room. Plastic sheeting and other transient combustibles would likely be required for contamination control during maintenance activities on pipe or tank components in the HAW process room. This material could be ignited by hot work or other ignition sources in the HAW process room including electrical shorts, or embers sucked into the facility from an external fire. Fires could also be initiated during normal operations (e.g., electrical shorts on motors, or lighting) but it is unlikely that such a fire would have sufficient intensity due to the designed low combustible loading to result in a significant radiological release. Normal operational fires are bounded by the fire postulated to occur during maintenance when transient combustibles could be introduced into the HAW process room.

Unmitigated Accident Progression

A small fire starts within the HAW process room or propagates from another location in the HAW area. The fire propagates through the HAW process room and heats high activity waste solution in the HAW tanks. The process solutions in the tanks are heated to boiling. The boiling action entrains radiological material that is swept into the PVVS and ultimately out the WSB stack. In this unmitigated scenario, no credit is taken for inline PVVS demisters, HEPA filters, and elevated release from the stack. Further, because the process tanks are only separated by partitions extending halfway to the ceiling, it is conservatively assumed that all HAW vessels may be involved as the fire progresses. Major contributors to the radiological dose are the following:

- The release mechanism in this accident is vigorous boiling in the HAW tanks which entrains radiological material in the tank.
- The duration of the release is conservatively assumed to occur over only 20 minutes.

Frequency Binning

The unmitigated frequency of fire with sufficient intensity to boil the process liquid in the HAW tanks is qualitatively determined to be Unlikely in the CHA (Ref. 4). The Unlikely frequency determination is based on the low combustible loading designed into the HAW process room. No detailed frequency analyses were performed to lower the assumed frequency.

3.4.2.1.2.2 Source Term Analysis

Source Term Derivation

The unmitigated ST was derived using the standard ST equation (ST = MAR x DR x ARF x RF x LPF) described in Section 3.4.1.1. The terms in the ST formula are discussed below.

Material at Risk

The MAR for this scenario is 18.3 kg of Am-241 and other associated nuclides in the waste distribution. The radiological distribution or composition of this waste is given in Table 3.3-5.

Damage Ratio

The DR is assumed to be one.

Airborne Release Fraction/Respirable Fraction and Airborne Release Rate/Respirable Fraction

A bounding ARF of 2.0E-3 and an RF of one was applied for a boiling solution (Ref. 8) to determine the unmitigated ST. This ARF value is valid so long as no more than 90% of the liquid content is boiled off. This is conservative due to the limited combustibles typically available in the vicinity of the vessels. If there were insufficient heat to vigorously boil the vessel contents, the ARF*RF value could be as low as 3.00E-05 resulting in much lower consequences.

Leak Path Factor

The LPF is set equal to one.

3.4.2.1.2.3 CONSEQUENCE ANALYSIS

The unmitigated consequence of the HAW process room fire is calculated in Reference 4. The unmitigated offsite consequence for the evaluated HAW process room fire is “Moderate” (7.3 rem). The unmitigated onsite consequences for the CW are “High” (greater than 100 rem) and are “High” for the FW. The mitigated consequences of an operational fire in the WSB are consistent with the radiological impacts given in Chapter 4 of the MFFF Environmental Impact Statement (EIS) (Ref. 34).

3.4.2.1.2.4 COMPARISON TO THE EVALUATION GUIDELINES

The radiological consequences for the HAW process room fire are conservatively calculated. The entire facility inventory is assumed to be involved in a fire of sufficient intensity to vigorously boil thousands of liters of solution within a short period of time. No credit is taken for the release through the PVVS and out the stack even though these passive components must be in place for the accident to occur. An elevated release would significantly reduce the consequences for workers. Since the unmitigated offsite consequences are conservatively evaluated (by at least an order of magnitude – e.g., boiling ground release, maximum bounding inventory for all vessels, no filtration), it is judged that the radiological consequences of the HAW process room fire do not challenge offsite EGs as defined in DOE-STD-3009-94 (Ref. 2). Therefore, no Safety Class controls are required for this accident. Further mitigated consequence calculations are not required.

This is the only unmitigated DBA scenario that exceeds 5 rem TEDE to the MOI and could therefore be considered "in the rem range" or "challenging" the offsite EG of 25 rem in DOE-STD-3009-94. Because the dose consequences calculated for this scenario are 7.3 rem TEDE to the MOI, the controls associated with the mitigation of this event were considered for Safety Class functional classification. Due to the bounding nature of this scenario and the fact that even in this bounding evaluation, it does not challenge the 25 rem EG, Safety Significant controls were determined to be appropriate for this scenario. If a more realistic calculation was performed for this scenario that considered design features, realistic inventories and physical considerations regarding the facility and the materials processed, the actual release and resulting dose would be significantly lower than what is reported for this bounding scenario. Some examples of the extremely bounding conservatisms in the unmitigated dose calculation which, if less conservative assumptions were used, would reduce the unmitigated dose consequences include:

1) Bounding inventory of 18.3 kgs Am-241 is used (inventories in WSB during routine operations anticipated to be less than one half of this bounding inventory).
2) Bounding ARF/RF from DOE-HDBK-3010-94 is used for a boiling release (2E-3 vs. 1E-3 median). Note that HDBK-3010 states the bounding ARF "exceeds all measured values" and a "conservative value of 1.0 is assumed for the RF bound" in the absence of a size distribution of the airborne droplets.
3) Active boiling was assumed for the entire duration of the release (bounding ARF/RF of 2E-3 vs. bounding ARF/RF of 3E-5 or median ARF/RF of 6E-7 for a vapor release of an aqueous solution from DOE-HDBK-3010-94).
4) Release duration was assumed to be 20 minutes (exceeds reasonable "boil rate" for this volume of solution).
5) Sufficient fuel was assumed to be available to involve the entire HAW inventory. In this accident scenario, the fire was assumed to burn with sufficient intensity to result in a boiling release but not with an intensity that would exhaust all the fuel before involving the entire HAW inventory. Because no flammable liquids or gases are located in this room and because the HAW process room is a low-combustible design (wiring in conduit, etc.), the fuel source would only be comprised of transient combustibles. This makes a fire of this intensity and duration extremely unlikely.
6) Fuel was assumed to be optimally distributed throughout the HAW process room so as to involve the entire HAW inventory. No credit was taken for the physical configuration of the process room, which includes division of the process room into four sections separated by approximately fourteen-foot high eighteen-inch thick stainless steel lined reinforced concrete walls (essentially fire barriers between the four sections). These walls would effectively direct any heat from a fire in one section up and away from the process vessels in adjacent sections, preventing these vessels from being directly involved in the release.
7) No credit is given to the long and tortuous exhaust pathway. This ignores material deposition along the hundreds of feet of small diameter ductwork to get to the exhaust stack.
8) Consistent with all accident analysis presented in this safety analysis, no credit is provided for any reduction in LPF either due to the exhaust ductwork or due to the HAW process room which are both robust PC-3+ seismically qualified SSCs. Also consistent with all accident analysis, worst case meteorological conditions are assumed with no

credit given for emergency response to mitigate the scenario (in this case, the fire) or to evacuate individuals potentially impacted by the accident scenario.

A project decision has been made to retain the bounding accident scenario described above with all inherent conservatisms rather than to revise the scenario to be reasonably conservative by using realistic (but still bounding) assumptions that would result in a lower unmitigated accident consequence in order to get below 5 rem TEDE to the MOI. Based on the discussion above, if any of the multiple bounding assumptions in the calculation were changed to reasonably conservative assumptions, the unmitigated dose consequence would drop below 5 rem. In order to avoid expenditure of significant resources to develop and defend calculation methodologies and assumptions which result in an unmitigated dose consequence of less than 5 rem for this scenario which clearly does not challenge the EG of 25 rem, the bounding unmitigated dose consequences with all of the associated conservatisms are stated "as is" so that the reviewer can conclude that Safety Significant controls are appropriate to mitigate this accident scenario.

Several other DBA scenarios exceed 1 rem TEDE to the MOI, including the HAW process vessel explosions caused by hydrogen accumulation in the tank head space, the flammable vapor explosion in the HAW evaporator and an elevated spill of the entire contents the bounding HAW vessel inventory due to a failed process pipe. While not specifically required to be evaluated for consideration of Safety Class controls, the scenarios were also evaluated for application of Safety Class controls. Due to the conservatisms in these bounding unmitigated accident scenarios, Safety Significant controls were again considered to be appropriate to prevent and/or mitigate these accident scenarios. Since these additional scenarios did not exceed the 5 rem threshold for specific consideration of Safety Class controls, no further discussion will be presented.The potential unmitigated consequences of this event are "High" to the FW and CW, and exceed the onsite worker evaluation criteria as defined in WSRC Procedure Manual E7, Procedure 2.25 (Ref. 23). Therefore, Safety Significant controls are required to protect the workers. Control selection for workers is performed in the hazard analysis as specified by DOE-STD-3009-94 (Ref. 2) and worker protection controls are reported in Section 3.3.2.3.3, Worker Safety.

3.4.2.1.2.5 SUMMARY OF SAFETY CLASS CONTROLS

Since the unmitigated offsite consequences do not challenge offsite EGs as defined in DOE-STD-3009-94 (Ref. 2), no Safety Class controls are required for this accident.

3.4.2.2 Operational Explosions

The CHA (Ref. 4) identified several explosion events that could occur during operational related activities of the WSB. No explosion events represent situations of major concern that could challenge offsite EGs. However, several explosion events could result in significant onsite impacts and represent situations of concern. Event HAL-2-005, an explosion that occurs inside one of the HAW process vessels was selected as representative bounding explosion accidents.

3.4.2.2.1 HIGH ACTIVITY WASTE PROCESS VESSEL HYDROGEN EXPLOSION

3.4.2.2.1.1 Scenario Development

The CHA (Ref. 12) identified several explosion events that could occur as a result of operational related activities in the WSB. Event HAL-2-5 is an explosion that occurs inside one of the HAW process vessels.

Accident Initiators

The HAW tanks contain TRU radionuclides dissolved in an aqueous nitric acid solution. Hydrogen is produced through radiolytic decomposition of hydrogenous material (i.e., water) within the HAW process vessels. Due to the high concentrations of alpha emitting radionuclides, hydrogen is abundantly produced in the HAW vessels. The LAW process vessels and the HAW condensate tank contain a much lower concentration of radionuclides and the accumulation of hydrogen above the LFL is not a plausible hazard. It would require several years of accumulation with no losses to reach the LFL in a LAW vessel (Ref. 28).

On a loss of flow through the PVVS, hydrogen can reach the LFL for a HAW tank at its maximum fill level in a few hours, conservatively ignoring nitrates (Ref. 28). If the anticipated nitrate concentration is assumed, this time is increased by approximately a factor of four. A loss of power to the PVVS exhaust fans or operator error (e.g., inadvertently shut off the PVVS exhaust flow) are the most likely causes for losing PVVS flow. Other potential initiators could be a mechanical failure of the fans, line breaks, vent path pluggage, NPH events, etc. Once above the LFL, an ignition source from either static or electrical shorts could ignite the flammable gas.

Unmitigated Accident Progression

A failure in the PVVS results in a loss of air sweep through the HAW process vessels. This failure is either undetected by the operations staff or the nature of the failure precludes quickly restoring ventilation sweep to the HAW process vessels. Hydrogen that is generated through radiolysis of solutions in the vessels is accumulated to levels exceeding the LFL either in a single vessel or multiple HAW vessels. An ignition source ignites the hydrogen resulting in a detonation.

The explosive condition would develop most rapidly in an HAW solution with the largest radionuclide quantities and lowest nitrate concentrations. The consequences would be highest for a solution with high radionuclide concentration and low density. Hydrogen is conservatively assumed to accumulate for 14 days with no dilution flow to reach a stoichiometric hydrogen/air mixture (29.5%). This is conservative because within 14 days, dilution flow from the PVV or other alternate means could easily be re-established from an upset condition. The initial conditions assume the solution is at hydrogen solubility limit so that all hydrogen generated enters the vapor space. In addition, it is assumed that no hydrogen leaves the tank through diffusion or atmospheric breathing. The bounding hydrogen generation rate in a tank (3.1E-01 cubic feet/hr (8.8 liters/hr) of hydrogen, Ref. 28) is achieved with the bounding radionuclide

content of 6 kg Am-241, a density of 1 g/ml, and no nitrates in the waste solution. The bounding concentration of Am-241 is 2 grams/liter equates to a waste volume of 3000 liters. The vapor space volume that reaches stoichiometric hydrogen/air mixture under these conditions is 10,000-liters. The consequences derived from a hypothetical tank with 3000 liters of waste and 10,000 liters of vapor space is bounding. Tanks smaller than 13,000 liters total volume, (Receipt Tanks – 12,800 L; Bottoms Tank – 3,600 L; Acid Overflow Tank – 11,200 L; and Cement Head Tank – 300 L), will have smaller vapor space volumes of stoichiometric hydrogen/air mixture, less waste corresponding to a lower hydrogen generation rate, or will have diluted concentrations of radionuclides any of which would result in reduced consequences. Tanks with larger total volumes (Head Tank- 24,500 L) will not reach stoichiometric hydrogen/air mixtures in 14 days or will have diluted concentrations of radionuclides resulting in lower consequences. For example, the head tank at the bounding conditions (3000 liters of 2 g/l Am-241) has a vapor space volume of approximately 21,500 L and would reach approximately 14% hydrogen in 14 days. The dose consequences for this condition are less than the bounding case. The case with all HAW tanks at the overflow has a combined vapor space of about 8000 L and an average concentration of 0.32g/L Am-241 which is also bounded by the single tank case. Other combinations of multiple tanks are bounded based on the conservatisms in the single tank case. The radiological dose was conservatively estimated based on the assumption that the mass of respirable solution made airborne due to the energy released by the vapor explosion is equivalent to mass of TNT required to produce the same amount of energy (Ref. 8 and 29).

Frequency Binning

The CHA (Ref. 4) identified the unmitigated frequency of this event as Anticipated due to the relatively short time required to reach flammable conditions.

3.4.2.2.1.2 SOURCE TERM ANALYSIS

The unmitigated ST was derived using the method described in Reference 8 for detonations above solutions in an enclosed space. The TNT equivalent method (Ref. 8) equates the mass of respirable solution made airborne to the energy released, expressed in terms of equivalent mass of TNT, during a vapor explosion in an enclosed space above the solution.

Source Term Derivation

Reference 29 calculated the STs using the method described in Reference 8 per unit volume of a stoichiometric hydrogen/air mixture as a function of solution specific gravity. These factors can be used to calculate STs as follows:

ST = volume of hydrogen air mixture x ($liters_{solution}/liter_{mixture}$) x concentration of Am-241 solution x DR x LPF

Where: volume of hydrogen air mixture = 10,000 liters

($liters_{solution\ released}/liter_{hydrogen\ air\ mixture}$) = 6.920E-04 at a specific gravity of one from Reference 28

Concentration of Am-241 = 2 grams/liter

No credit is taken for a DR or LPF. Thus, the ST = 13.84 grams or 47.6 curies of Am-241

3.4.2.2.1.3 CONSEQUENCE ANALYSIS

The unmitigated consequence of the HAW process vessel explosion is calculated in Reference 4. The consequences are based on a 3-minute release duration. The unmitigated offsite consequence for the evaluated HAW process vessel explosion is "Low" (4.1 rem). The unmitigated onsite consequences for the CW are "High" (greater than 100 rem) and are "High" for the FW. Because an HAW process vessel explosion is prevented, no consequences are associated with such an event. This is consistent with Chapter 4 of the MFFF EIS (Ref. 34), which does not include consequence determinations for explosions in WSB.

3.4.2.2.1.4 COMPARISON TO THE EVALUATION GUIDELINES

Due to the conservative assumptions used in the unmitigated accident analysis, the offsite consequences are judged not to challenge the offsite EGs as defined in DOE-STD-3009-94 (Ref. 2). Conservatisms include the assumptions that no nitrates are present in the solution, Am-241 quantities and concentration at bounding level, specific gravity of one, and the 14 days for hydrogen to accumulate. The ST is directly proportional to the amount of hydrogen burned and radionuclide concentration of the waste. If the anticipated nitrate concentration is assumed the hydrogen generation rate is reduced by approximately a factor of four with a proportional reduction in the reported consequences. Less quantity of Am-241 at the bounding concentration would equate to less hydrogen. The effect of a lower radionuclide concentration than the bounding value would also results in proportionally less consequences. Further, the specific gravity of the Am-241 solution is well above one. Selecting the anticipated larger specific gravity would drive the calculated dose down further by as much as 15 percent. Finally, a more reasonable time for hydrogen to accumulate is 7 days. This value was doubled to 14 days for the bounding analysis. Recognizing these conservatisms embedded in the offsite does calculation clearly demonstrates no Safety Class controls are required for this accident. Further mitigated consequence calculations are not required.

The potential unmitigated consequences of this event are "High" to the FW and CW, and exceed onsite worker evaluation criteria as defined in WSRC Procedure Manual E7, Procedure 2.25 (Ref. 23). Therefore, Safety Significant controls are required to protect the workers. Control selection for workers is performed in the hazard analysis as specified by DOE-STD-3009-94 (Ref. 2) and worker protection controls are reported in Section 3.3.2.3.3, Worker Safety.

3.4.2.2.1.5 SUMMARY OF SAFETY CLASS CONTROLS

Since the unmitigated offsite consequences do not challenge offsite EGs as defined in DOE-STD-3009-94 (Ref. 2), no Safety Class controls are required for this accident.

3.4.2.3 Operational Spills

The CHA (Ref. 4) identified several operational events involving the loss of confinement or spills of WSB process solution from vessel tanks and lines. None of these events challenge the offsite EGs. The spill of the entire contents of a HAW process vessel (HAL-3-003a) is the single worst consequence event of this type and is selected as the bounding consequence representative spill.

3.4.2.3.1 LEAKS/SPILLS FROM HIGH ACTIVITY WASTE PROCESS VESSELS AND PIPING

3.4.2.3.1.1 Scenario Development

During a transfer either to or from a HAW process vessel, the transfer pipe suffers a loss of confinement. This loss of confinement is undetected and the transfer continues pumping out the entire contents of a HAW process vessel. The pipe loss of confinement is assumed to occur in the worst possible location which is piping located near the ceiling which is approximately 30 feet above the floor. This event bounds spills from other locations in the facility due to the bounding height associated with this spill.

Accident Initiators

A HAW process pipe may lose integrity due to corrosion/erosion, poor maintenance, or some undefined operational upset.

Unmitigated Accident Progression

A HAW process vessel pipe loses integrity due to corrosion, poor maintenance, or some operational error. This results in the release of the entire vessel inventory into the process room during a tank transfer activity.

Frequency Binning

The CHA (Ref. 4) defines the frequency of this type of event as Anticipated.

3.4.2.3.1.2 Source Term Analysis

Source Term Derivation

The unmitigated ST was derived using the standard ST equation (ST = MAR x DR x ARF x RF x LPF) described in Section 3.4.1.1. The terms in the ST formula are discussed below.

Material at Risk

The total MAR for any single HAW vessel is assumed to be 6.0 kg of Am-241 plus the associated additional radionuclide distribution in the waste (Ref. 35). The MAR associated with the events bounded by this scenario vary from a few gallons of HAW solution up to the entire inventory of the worst case HAW vessel.

Damage Ratio

The DR is assumed to be one.

Airborne Release Fraction/Respirable Fraction and Airborne Release Rate/Respirable Fraction

Splashing and entrainment of process liquid are considered. The bounding ARF (3E-3) and RF (0.4) were derived from DOE-HDBK-3010-94 (Ref. 8) as calculated in Reference 4 and assume a free-fall spill of aqueous solutions with a 30-feet fall distance.

Leak Path Factor

The LPF is set equal to one.

3.4.2.3.1.3 Consequence Analysis

The unmitigated consequence of the HAW spill is calculated in Reference 4. The unmitigated offsite consequence for the evaluated HAW spill is "Low" (2.1 rem). The unmitigated onsite consequences for the CW are "High" (greater than 100 rem) and are "High" for the FW. The mitigated consequences of an operational spill in the WSB are consistent with the radiological impacts given in Chapter 4 of the MFFF EIS (Ref. 34).

3.4.2.3.1.4 Comparison to Evaluation Guidelines

The offsite consequences of process solution spills do not challenge offsite EGs as defined in DOE-STD-3009-94 (Ref. 2). Therefore, no Safety Class controls are required for this accident. Further mitigated consequence calculations are not required.

The potential unmitigated consequences of this event are "High" to the CW and exceed the onsite worker evaluation criteria as defined in WSRC Procedure Manual E7, Procedure 2.25 (Ref. 23). Therefore, Safety Significant controls are required to protect the CWs. Further, the consequences of radiological spills challenge onsite evaluation criteria for the FW. Therefore, Safety Significant controls are also required for the FW. Control selection for workers is performed in the hazard analysis as specified by DOE-STD-3009-94 (Ref. 2) and worker protection controls are reported in Section 3.3.2.3.3, Worker Safety.

3.4.2.3.1.5 Summary of Safety Class Controls

Since the unmitigated offsite consequences do not challenge offsite EGs as defined in DOE-STD-3009-94 (Ref. 2), no Safety Class controls are required for this accident.

3.4.2.4 Man-Made External Fire/Spill Accidents

3.4.2.4.1 AIRCRAFT CRASH

3.4.2.4.1.1 Scenario Development

The CHA (Ref. 4) identified the crash of an aircraft into the WSB (excludes HAW area, Ref. 31) as a credible scenario that may result in the release of radiological material from the facility (Event FW-6-1).

An aircraft crash is chosen as the bounding external man-made event for the WSB. An airplane crash is a high kinetic energy event that could provide the potential for missiles capable of damaging building components which could result in the breach of multiple radiological barriers and confinements with resultant radiological spills. Further, the aircraft could contain a large amount of fuel resulting in a large fire.

Accident Initiators

Due to either a mechanical/equipment failure or a pilot error, the aircraft crashes and impacts the WSB. The aircraft breaks apart resulting in fuel spills, missiles, and burning debris. The aircraft and missiles generated from the crash significantly damage the building confinement and initiate a large fire. This fire continues to propagate to portions of the building not directly impacted by the aircraft or aircraft debris.

Unmitigated Accident Progression

In this scenario, an aircraft operating in the vicinity of the WSB loses control and crashes into the WSB. The aircraft does not crash directly into the HAW process area. An evaluation (Ref. 31) of aircraft crashes into the WSB concluded it was not credible for an aircraft to directly affect the reduced area of concern associated with the HAW process area. Rather, the aircraft impacts another portion of the building and breaks apart upon impact resulting in fuel spills, missiles, and burning debris.

Multiple fires occur as a result of the fuel spill and a large propagating fire ensues. In the unmitigated scenario, no credit is taken for the fire barrier surrounding the HAW process area. This fire eventually defeats the barrier and involves the HAW process vessels, vigorously boiling the liquid in these tanks. The major contributor to the dose is the HAW liquid inventory in the HAW process room. Lesser contributors include the HAW liquid in the cementation area, the LAW inventory, and the laboratory inventory.

Frequency Binning

Reference 31 determined the unmitigated frequency of an aircraft impacting the WSB to be in the Extremely Unlikely range and the frequency of an aircraft impacting the HAW area specifically to be BEU.

3.4.2.4.1.2 Source Term Analysis

Source Term Derivation

Unmitigated STs were derived using the standard ST equation (ST = MAR x DR x ARF x RF x LPF) described in Section 3.4.1.1. The terms in the ST formula are discussed below.

Material at Risk

The MAR involved in this scenario is 18.3 kg of Am-241 and other associated nuclides in the waste distribution.

Damage Ratio

The DR is assumed to be one.

Airborne Release Fraction/Respirable Fraction and Airborne Release Rate/Respirable Fraction

A bounding ARF of 2.0E-3 and an RF of one was applied for a boiling solution in the fire following the event to determine the unmitigated ST associated with thermal stress on liquids.

Leak Path Factor

The LPF is set equal to one.

3.4.2.4.1.3 Consequence Analysis

The unmitigated consequence of the aircraft crash is calculated in Reference 4. The unmitigated offsite consequence for the evaluated aircraft crash is “Moderate” (7.3 rem). The unmitigated onsite consequences for the CW are “High” (greater than 100 rem) and are “High” for the FW. Although the MFFF EIS (Ref. 34) does not include any WSB external events, the mitigated consequences of an aircraft crash in the WSB are consistent with the PDCF load handling radiological impacts given in Chapter 4 of the MFFF EIS.

3.4.2.4.1.4 Comparison to Evaluation Guidelines

Due to the conservative assumptions used in the unmitigated accident analysis, the offsite consequences are judged not to challenge offsite EGs as defined in DOE-STD-3009-94 (Ref. 2). A major conservatism is that no credit is taken for the passive external concrete walls qualified to NPH PC-3+ (seismic) criteria. It is unlikely that a light aircraft would penetrate the highly reinforced external concrete walls. Further, the passive fire barriers internal to the facility could be reasonably expected to limit the involvement of facility inventory in any ensuing fire which would significantly lower the offsite radiological dose. Therefore, no Safety Class controls are required for this accident. Further mitigated consequence calculations are not required.

The potential unmitigated radiological consequences of this event are "High" to the FW and CW and exceed onsite worker evaluation criteria as defined in WSRC Procedure Manual E7, Procedure 2.25 (Ref. 23). Therefore, Safety Significant controls are required to protect the workers. Control selection for workers is performed in the hazard analysis as specified by DOE-STD-3009-94 (Ref. 2) and worker protection controls are reported in Section 3.3.2.3.3, Worker Safety.

3.4.2.4.1.5 Summary of Safety Class Controls

Since the unmitigated offsite consequences do not challenge offsite EGs as defined in DOE-STD-3009-94 (Ref. 2), no Safety Class controls are required for this accident.

3.4.2.5 Natural Phenomena Hazards

3.4.2.5.1 SEISMIC EVENT

The CHA (Ref. 4) identified a seismic event as a potential initiator for a radiological release from the facility. This event corresponds to Event FW-7-004 in the CHA (Ref. 4).

3.4.2.5.1.1 Scenario Development

In this scenario, it is postulated that during a seismic event, power is lost to the WSB. Support systems such as electrical systems, electrical power to the facility, and building ventilation systems may fail to function either during or after a seismic event. On a loss of power and/or damage incurred from the seismic event, the PVVS fails. This allows hydrogen generated by radiolytic decomposition of the aqueous solution in the HAW process solution tanks to begin to accumulate. Under worse case conditions, the hydrogen level in a HAW vessel can exceed the LFL in a few hours, conservatively ignoring nitrates (Ref. 28). Additionally, a fire starts in either a maintenance area or laboratory area due to the presence of flammable materials and a relatively high combustible loading.

The Safety Significant WSB structure, process vessels, and pipes are designed to NPH PC-3+ (seismic) criteria. Therefore, the building structure, process tanks, and piping remain intact during and after the design basis seismic event.

The HAW area is not routinely accessed, is designed with a low combustible loading, and is isolated by a Safety Significant seismically rated fire barrier. Though the possibility of electrical sparking and incipient fires cannot be ruled out in the HAW area, a fire of sufficient intensity to release material from the HAW area is not postulated. Large post-seismic fires in areas designed with low combustible loads and isolated by seismically qualified fire barriers are addressed as BDBAs.

Accident Initiators

A seismic event disables the PVVS and initiates a propagating fire in a laboratory or maintenance area.

Unmitigated Accident Progression

An earthquake occurs that is sufficient to compromise the PC-3+ SSCs. During the earthquake, the PVVS is damaged and/or loses power and fails. Hydrogen that is generated through radiolysis of solutions in the vessels is accumulated to levels exceeding the LFL either in a single vessel or multiple HAW vessels. An ignition source ignites the hydrogen resulting in a detonation.

The explosive condition would develop most rapidly in an HAW solution with the largest radionuclide quantities and lowest nitrate concentrations. The consequences would be highest for a solution with high radionuclide concentration and low density. Hydrogen is conservatively assumed to accumulate for 14 days to reach a stoichiometric hydrogen/air mixture (29.5%). The initial conditions assume the solution is at hydrogen solubility limit so that all hydrogen generated enters the vapor space. In addition, it is assumed that no hydrogen leaves the tank through diffusion or atmospheric breathing. The bounding hydrogen generation rate in a tank (3.1E-01 cubic feet/hr (8.8 liters/hr) of hydrogen, Ref. 28) is achieved with the bounding radionuclide content of 6 kg Am-241, a density of 1 g/ml, and no nitrates in the waste solution. The bounding concentration of Am-241 is 2 grams/liter equates to a waste volume of 3000 liters. The vapor space volume that reaches stoichiometric hydrogen/air mixture under these conditions is 10,000-liters. The consequences derived from a hypothetical tank with 3000 liters of waste and 10,000 liters of vapor space is bounding. Tanks smaller than 13,000 liters total volume, (Receipt Tanks – 12,800 L; Bottoms Tank – 3,600 L; Acid Overflow Tank – 11,200 L; and Cement Head Tank – 300 L), will have smaller vapor space volumes of stoichiometric hydrogen/air mixture, less waste corresponding to a lower hydrogen generation rate, or will have diluted concentrations of radionuclides any of which would result in reduced consequences. Tanks with larger total volumes (Head Tank- 24,500 L) will not reach stoichiometric hydrogen/air mixtures in 14 days or will have diluted concentrations of radionuclides resulting in lower consequences. For example, the head tank at the bounding conditions (3000 liters of 2 g/l Am-241) has a vapor space volume of approximately 21,500 L and would reach approximately 14% hydrogen in 14 days. The dose consequences for this condition are less than the bounding case. The case with all

HAW tanks at the overflow has a combined vapor space of about 8000 L and an average concentration of 0.32g/L Am-241 which is also bounded by the single tank case. Other combinations of multiple tanks are bounded based on the conservatisms in the single tank case. The radiological dose was conservatively estimated based on the assumption that the mass of respirable solution made airborne due to the energy released by the vapor explosion is equivalent to mass of TNT required to produce the same amount of energy (Ref. 8 and 29).

Concurrently with this event, a fire starts in a laboratory or maintenance area and involves the radiological inventory outside the HAW process room. This inventory is very small relative to the HAW and represents a negligible dose potential to the MOI. The HAW area is separated by a Safety Significant seismically qualified fire barrier and the facility fire is not postulated to breach this barrier and propagate to the HAW process room.

Major contributors to the radiological dose are the following:

- The mass of respirable solution made airborne due to the energy released by the vapor explosion is assumed to be equivalent to the mass released that would result from the same amount of energy produced by detonation of an equivalent mass of TNT.
- The duration of the release is conservatively assumed to occur over only 3 minutes.

Frequency Binning

The occurrence of a seismic event falls into the Unlikely frequency bin.

3.4.2.5.1.2 Source Term Analysis

The unmitigated ST was derived using the method described in Reference 8 for detonations above solutions in an enclosed space. The TNT equivalent method (Ref. 8) equates the mass of respirable solution made airborne to the energy released, expressed in terms of an equivalent mass of TNT, during a vapor explosion in an enclosed space above the solution.

Source Term Derivation

Reference 29 calculated the STs using the method described in Reference 7 per unit volume of a stoichiometric hydrogen/air mixture as a function of solution specific gravity. These factors can be used to calculate STs as follows:

ST = volume of hydrogen air mixture x ($liters_{solution}/liter_{mixture}$) x concentration of Am-241 solution x DR x LPF

Where: volume of hydrogen air mixture = 10,000 liters

($liters_{solution}/liter_{mixture}$) = 6.920E-04 at a specific gravity of one from Reference 29

Concentration of Am-241 = 2 grams per liter

No credit is taken for a DR or LPF. Thus, the ST = 13.84 grams or 47.6 curies of Am-241.

3.4.2.5.1.3 Consequence Analysis

The unmitigated consequence (no credit for the seismically qualified walls or fire barriers) of the HAW process vessel explosion is calculated in Reference 4. The unmitigated offsite consequence for the evaluated HAW process vessel explosion is "Low" (4.1 rem). The unmitigated onsite consequences for the CW are "High" (greater than 100 rem) and are "High" for the FW. The mitigated consequences associated with a seismic event at the WSB are consistent with the radiological impacts given in Chapter 4 of the MFFF EIS (Ref. 34).

3.4.2.5.1.4 Comparison to Evaluation Guidelines

Due to the conservative assumptions used in the unmitigated accident analysis, the offsite consequences are judged not to challenge offsite EGs as defined in DOE-STD-3009-94 (Ref. 2). Conservatisms include the assumptions that no nitrates are present in the solution, Am-241 quantities and concentration at bounding level, specific gravity of one, and the 14 days for hydrogen to accumulate. The ST is directly proportional to the amount of hydrogen burned and radionuclide concentration of the waste. If the anticipated nitrate concentration is assumed the hydrogen generation rate is reduced by approximately a factor of four with a proportional reduction in the reported consequences. Less quantity of Am-241 at the bounding concentration would equate to less hydrogen. The effect of a lower radionuclide concentration than the bounding value would also results in proportionally less consequences. Further, the specific gravity of the Am-241 solution is well above one. Selecting the anticipated larger specific gravity would drive the calculated dose down further by as much as 15 percent. Finally, a more reasonable time for hydrogen to accumulate is 7 days. This value was doubled to14 days for the bounding analysis. Recognizing these conservatisms embedded in the offsite does calculation clearly demonstrates that no Safety Class controls are required for this accident. Further mitigated consequence calculations are not required.

The potential unmitigated consequences of this event are "High" to the FW and CW, and exceed onsite worker evaluation criteria as defined in WSRC Procedure Manual E7, Procedure 2.25 (Ref. 23). Therefore, Safety Significant controls are required to protect the workers. Control selection for workers is performed in the hazard analysis as specified by DOE-STD-3009-94 (Ref. 2) and worker protection controls are reported in Section 3.3.2.3.3, Worker Safety.

3.4.2.5.1.5 Summary of Safety Class Controls

Since the unmitigated offsite consequences do not challenge offsite EGs as defined in DOE-STD-3009-94 (Ref. 2), no Safety Class controls are required for this accident.

3.4.2.5.2 TORNADO / WIND

The CHA (Ref. 4) determined that the potential exists for a tornado event to result in a release of waste from the facility (Event FW-7-001). As an initial condition, the process building structure is designed to survive the tornado and protect materials inside the HAW process room and

cementation area. There is no missile protection provided for various doors and openings around the LAW area.

3.4.2.5.2.1 Scenario Development

The bounding event, a tornado that meets NPH PC-3 (wind/tornado) criteria, has the potential to result in the release of all process solutions outside the HAW area and cementation area. This includes the TRU drums staged outside the main facility and the LAW inventory that may be damaged by missiles that could enter through doors and openings. The tornado may also cause loss of PVVS dilution flow resulting in the potential for hydrogen accumulation and subsequent explosion. A discussion of this event is in Section 3.4.2.2.1.

Accident Initiators

A tornado that meets NPH PC-3 (wind/tornado) criteria impacts the WSB.

Unmitigated Accident Progression

The DBA is a tornado that meets NPH PC-3 (wind/tornado) criteria. During the tornado, it is possible to damage facility vessels, piping, and other containment structures that contain releasable nuclear material. The tornado has the potential to involve the facility inventory if no credit is taken for protective structures.

Frequency Binning

The CHA (Ref. 4) identified that the occurrence of a tornado event falls into the Unlikely frequency bin.

3.4.2.5.2.2 Source Term Analysis

Source Term Derivation

The unmitigated ST was derived using the standard ST equation (ST = MAR x DR x ARF x RF x LPF) described in Section 3.4.1.1. The terms in the ST formula are discussed below.

Material at Risk

The MAR for the unmitigated event includes the inventory of the WSB outside of the HAW area and the cementation area. This includes the LAW inventory (1.1 Curies of Am-241), a small amount of material in the form of analytical laboratory samples (approximately 2 grams of Am-241), and the TRU waste inventory (320 PEC in the form of job waste and 7,430 curies in the form of cemented waste).

Damage Ratio

The DR is assumed to be one.

Airborne Release Fraction/Respirable Fraction and Airborne Release Rate/Respirable Fraction

For the unmitigated event, the CHA (Ref. 4) estimated the MAR based upon a spill scenario. An ARF of 2.0E-04 and RF of 5.0E-01 were applied to the liquid inventory involved based on Reference 8. ARFxRF values 7.0E-05 and 1.0E-4 were applied to grouted waste and job waste, respectively based on guidance from DOE-STD-5506-2007 (Ref. 36).

Leak Path Factor

The LPF is set equal to one.

3.4.2.5.2.3 Consequence Analysis

Based on the assumption that the Safety Significant WSB structure, qualified to NPH PC-3 (wind/tornado) criteria, surrounding the HAW area and cementation area survive the event and protect the material inside, the unmitigated radiological consequence for the evaluated tornado that meets NPH PC-3 (wind/tornado) criteria is "Negligible" to the MOI (~3.5E-02 rem), and "Low" to the CW and FW. The consequences of a tornado impacting the WSB are well below the radiological impacts given in Chapter 4 of the MFFF EIS (Ref. 34) for other events (e.g., a seismic event).

3.4.2.5.2.4 Comparison to Evaluation Guidelines

The offsite consequences do not challenge offsite EGs as defined in DOE-STD-3009-94 (Ref. 2). Therefore, no Safety Class controls are required for this accident. Further mitigated consequence calculations are not required.

3.4.2.5.2.5 Summary of Safety Class Controls

Since the unmitigated offsite consequences do not challenge offsite EGs as defined in DOE-STD-3009-94 (Ref. 2), no Safety Class controls are required for this accident.

3.4.3 BEYOND DESIGN BASIS ACCIDENTS

DOE-STD-3009-94 (Ref. 2) requires consideration of accidents that are beyond the design basis of the facility to provide a perspective of the residual risk with the operation of the facility. The BDBAs serve as bases for cost-benefit considerations if consequences exceeding the EGs are identified in the BDBA range.

DOE-STD-3000-94 (Ref. 2) does not require that BDBAs be analyzed to the same level of detail as DBAs. The requirement is that an evaluation be performed that simply provides insight into the magnitude of the consequences of BDBAs (i.e., provide perspective on potential facility vulnerabilities). This insight from a BDBA has the potential for identifying additional facility features that could prevent or reduce severe BDBA consequences.

Operational BDBAs are simply those operational events with more severe conditions or equipment failures than are estimated for the corresponding DBA. For natural phenomena events, BDBAs are defined by an initiating frequency of the natural phenomena event that is less than the DBA frequency of occurrence. BDBAs are not evaluated for man-made external events.

A structural collapse of the WSB followed by a full facility fire has been selected for evaluation as a BDBA and is considered to represent the highest radiological consequences possible, bounding consequences associated with other severe accident phenomena such as explosions. In addition, red oil explosions were selected for evaluation as a BDBA because of the associated offsite consequences and the interest in these events.

3.4.3.1 Beyond Design Basis Seismic Accident

3.4.3.1.1 SCENARIO DEVELOPMENT

3.4.3.1.1.1 Accident Initiators

WSB structural components including process vessels and pipes are qualified to NPH PC-3+ (seismic) criteria. However, a more energetic seismic event could fail key WSB SSCs such as HAW vessels and fire walls and initiate propagating fires.

Unmitigated Accident Progression

A severe seismic event occurs in the immediate vicinity of the WSB. The ground acceleration is more severe than NPH PC-3+ (seismic) site criteria established for the facility. The resultant force results in significant damage to load bearing walls including the 18-inch fire wall surrounding the HAW process room. Further, the structural supports for HAW tanks and piping fail, resulting in a large spill of HAW solution. For a seismically initiated fire to occur inside the process room with sufficient intensity to result in a significant release of HAW solution, an ignition source must be present and sufficient combustibles must be available to fuel a large and intense fire which could boil the HAW solution. The HAW process room is designed with a low combustible loading, limited ignition sources and no flammable gases or liquids that are typical potential initiators for post-seismic fires. Nonetheless, an ignition source either in or external to the HAW process room is assumed to ignite sufficient combustibles in the process room to result in a large post seismic fire of sufficient intensity to boil the HAW solution. Major contributors to dose include the following:

- The entire HAW inventory spills and is subjected to spill stress.

- The entire HAW liquid inventory is subjected to high heat flux from the propagating fire and vigorously boils.

Frequency Binning

The frequency of the evaluated seismic event is Unlikely. The more energetic seismic event is less frequent than the evaluated seismic accident and classified as a BDBA.

3.4.3.1.2 SOURCE TERM ANALYSIS

The HAW process MAR is assumed to be the maximum facility inventory which is 18.3 kg Am-241 and other associated nuclides in the waste. The radiological distribution or composition of this waste is given in Table 3.3-5.

Source Term Derivation

The unmitigated ST was derived using the standard ST equation (ST = MAR x DR x ARF x RF x LPF) described in Section 3.4.1.1. The terms in the ST formula are discussed below.

Material at Risk

The MAR for this scenario is 18.3 kg of Am-241 and other associated nuclides in the waste distribution.

Damage Ratio

The DR is assumed to be one.

Airborne Release Fraction/Respirable Fraction and Airborne Release Rate/Respirable Fraction

A bounding ARF of 2.0E-3 and an RF of one was applied for a boiling solution (Ref. 8) to determine the unmitigated ST. This value is less conservative than the value for boiling liquids to dryness. This is appropriate because this event results in the spill of the vessel contents prior to the fire. The liquid will be spread over a wide area of debris of which only a fraction will burn. As a result, only a portion of the liquid will be subjected to the fire and boiling to dryness would only occur in localized areas.

A bounding ARF of 2E-04 and RF of 0.5 was applied to impact (spill) stresses.

Leak Path Factor

The LPF is set equal to one.

3.4.3.1.3 CONSEQUENCE ANALYSIS

The unmitigated consequence of the spill of the entire HAW inventory and full facility fire is calculated in Reference 4. The unmitigated offsite consequence for the beyond design basis seismic event is "Moderate" (7.9 rem). The unmitigated onsite consequence for the CW is "High" (greater than 100 rem).

3.4.3.2 Beyond Design Basis Explosion Accident

Based on information from the originating facilities (PDCF and MFFF), organic compounds will only be present in the feed streams at trace concentrations. Two mechanisms were identified by which organics could cause an explosion in the evaporators. The first mechanism is accumulation of flammable gases (volatile organic compounds and hydrogen) in the evaporator followed by ignition. This scenario was analyzed as Events HAL 2-004a and LAL 2-004a and is bounded by the hydrogen explosion event described in Subsection 3.4.2. The second mechanism is a red oil explosion. Because the red oil explosion is only possible at higher organic concentrations, this scenario was not considered as part of the WSB design basis, but it is being included as a BDBA.

3.4.3.2.1 SCENARIO DEVELOPMENT

The CHA (Ref. 4) identified red oil explosions in the HAW and LAW evaporators as an event without a credible cause because organic compounds (TBP in particular) will not be present in sufficient concentrations to support this type of explosion. These events have been included in the Appendix A hazard evaluation tables. Event HAL-2-004 is a red oil explosion inside of the HAW evaporator resulting in the release of radiological material. The HAW evaporator event bounds the LAW evaporator explosion (Event LAL-2-004).

3.4.3.2.1.1 Accident Initiators

The WSB feed streams will not contain sufficient organic compounds (primarily TBP) to support a red oil explosion. However, if one of the feed streams were to contain sufficient TBP, a red oil explosion may be initiated by the presence of nitric acid, heavy metal solutions, and TBP at high temperatures in the evaporator.

3.4.3.2.1.2 Unmitigated Accident Progression

A red oil explosion is the product of a chemical reaction between nitric acid and TBP at high temperatures in the presence of heavy metal solutions producing pressure and explosive gases. Because the waste streams are acidic, a red oil explosion could occur in the evaporator if excessive amounts of TBP are present and the temperature is above 130 °C. Such an explosion would result in the release of the contents of the evaporator.

3.4.3.2.1.3 Frequency Binning

Red oil events are classified as a BDBA. The less energetic deflagration events (Events LAL-2-004a and HAL-2-004a) that would be caused by accumulation of volatile organic compounds are Unlikely.

3.4.3.2.2 SOURCE TERM ANALYSIS

The MAR for the HAW evaporator red oil explosion is assumed to be the maximum evaporator radionuclide content which is 6.0 kg of Am-241 and the associated radionuclides in the waste stream. The radionuclide distribution of this waste is given in Table 3.3-5.

Source Term Derivation

The unmitigated ST was derived using the standard ST equation (ST = MAR x DR x ARF x RF x LPF) described in Section 3.4.1.1. The terms in the ST formula are discussed below.

Material at Risk

The HAW evaporator is assumed to hold up to 6.0 kg of Am-241, plus other radionuclides in the waste distribution. The radiological composition of this waste is given in Table 3.3-5.

Damage Ratio

The DR is assumed to be one.

Airborne Release Fraction/Respirable Fraction and Airborne Release Rate/Respirable Fraction

A bounding ARF of 0.1 and an RF of 0.7 was applied for a superheated liquid (Ref. 8) to determine the unmitigated ST.

Leak Path Factor

The LPF is set equal to one.

3.4.3.2.3 CONSEQUENCE ANALYSIS

Because red oil explosions are very energetic, the associated ARF would be very high. Therefore, the unmitigated radiological consequence from a red oil explosion in the HAW evaporator would be “High” to all receptors. However, input from the originating facilities (MFFF and PDCF) indicate that a red oil event is not credible. Processes to be performed in these facilities will produce waste streams that will not contain organic compounds above trace level concentrations. In addition, Safety Significant controls credited with preventing other

evaporator explosion scenarios (Events HAL-2-004a and LAL-2-004a) would also prevent red oil explosions. These controls are evaporator temperature interlocks, evaporator steam pressure interlocks, and the WSB WACP.

3.5 REFERENCES

1. Hazard Categorization and Accident Analysis Techniques for Compliance with DOE Order 5480.23, Nuclear Safety Analysis Reports. DOE-STD-1027-92, Change Notice 1, U.S. Department of Energy, Washington, DC, September 1997.

2. Preparation Guide for U.S. Department of Energy Nonreactor Nuclear Facility Safety Analysis Reports. DOE-STD-3009-94, Change Notice No. 3, U.S. Department of Energy, Washington, DC, March 2006.

3. Facility Safety Documentation Manual. Procedure Manual 11Q, Westinghouse Savannah River Company, Aiken, SC.

4. Consolidated Hazards Analysis For The Waste Solidification Building. WSRC-TR-2007-00134, Rev. 0, Washington Savannah River Company, Aiken SC, February 2008.

5. Consolidated Hazards Analysis Process (CHAP) Program & Methods Manual. WSRC Procedure Manual SCD-11, Rev. 5, Washington Savannah River Company, Aiken, SC, July 2007.

6. Natural Phenomena Hazards Performance Categorization Criteria for Structures, Systems, and Components. DOE-STD-1021-93, Change Notice 1, U.S. Department of Energy, Washington, DC, April 2002.

7. Nuclear Safety Management. Title 10, Code of Federal Regulations, Part 830, U.S. Department of Energy, Washington, DC.

8. Airborne Release Fractions/Rates and Respirable Fractions for Non-Reactor Nuclear Facilities. DOE-HDBK-3010-94, Volume 1, Change Notice 1, U.S. Department of Energy, Washington D.C., March 2000.

9. Facility Safety. DOE Order 420.1B, U.S. Department of Energy, Washington, DC, December 2005.

10. Natural Phenomena Hazards Design and Evaluation Criteria for Department of Energy Facilities. DOE-STD-1020-2002, U.S. Department of Energy, Washington, DC, January 2002.

11. Safety Documentation Integrated Work Process. WSRC Procedure Manual SCD-12, Rev. 0, Washington Savannah River Company, Aiken, SC, December 2005.

12. Washington Savannah River Company Nuclear Criticality Safety Manual. Procedure Manual WSRC-SCD-3, Rev. 21, Washington Savannah River Company, Aiken, SC, November 2007.

13. WSRC Conduct of Engineering and Technical Support Procedure Manual, WSRC Procedure Manual E7, Westinghouse Savannah River Company, Aiken, SC, June 2007.

14. WSRC Management Requirements and Procedures. WSRC Procedure Manual 1B, Washington Savannah River Company, Aiken, SC.

15. Employee Safety Manual. WSRC Procedure Manual 8Q, Washington Savannah River Company, Aiken, SC.

16. Design Hazards Analysis Process (DHAP) Report for the Waste Solidification Building Process Systems. M-ESR-F-00129, Rev. 0, Washington Savannah River Company, Aiken, SC.

17. Design Hazards Analysis Process (DHAP) Report for the Waste Solidification Building Balance of Plant. M-ESR-F-00137, Rev. 0, Washington Savannah River Company, Aiken, SC.

18. "Process Safety Management of Highly Hazardous Chemicals, Occupational Safety and Health Standards," Labor. Title 29, Code of Federal Regulations, Part 1910.119, U.S. Nuclear Regulatory Commission, Washington, DC.

19. "Chemical Accident Prevention Provisions," Protection of Environment. Title 40, Code of Federal Regulations, Part 68, U.S. Nuclear Regulatory Commission, Washington, DC.

20. "Emergency Planning and Notification," Protection of Environment. Title 40, Code of Federal Regulations, Part 355, U.S. Nuclear Regulatory Commission, Washington, DC.

21. 'Designation of Hazardous Substances,' "Designation, Reportable Quantities, and Notification," Protection of Environment. Title 40, Code of Federal Regulations, Part 302.4, U.S. Nuclear Regulatory Commission, Washington, DC.

22. Safety Documentation Integrated Work Process Guidelines and Methods. WSRC-RP-95-1001, Rev. 2, Westinghouse Savannah River Company, Aiken, SC.

23. "Functional Classifications," Procedure 2.25, Rev. 15, Conduct of Engineering and Technical Support Procedure Manual. WSRC Procedure Manual E7, Westinghouse Savannah River Company, Aiken, SC, June 2007.

24. Preliminary Hazards Survey for the Waste Solidification Building (WSB). S-EHS-F-00002, Washington Savannah River Company, Aiken, SC, January 2008.

25. Integration of Safety into the Design Process, DOE-STD-1189-2008, United States Department of Energy, Washington, DC, March 2008.

26. Nuclear Criticality Safety in Operations with Fissionable Material Outside Reactors. ANSI/ANS-8.1-1998, American National Standards Institute/American Nuclear Society, LaGrange Park, IL, September 1998.

27. Reilly, T.A. Nuclear Criticality Safety Evaluation (NCSE): Waste Solidification Building (WSB). N-NCS-F-00094, Rev. 2, Washington Safety Management Solutions, Aiken, SC, July 2007.

28. Waste Solidification Building Tanks Hydrogen Times to LFL (U). S-CLC-F-00608, Rev. A, Washington Savannah River Company, Aiken, SC, May 2007.

29. Allison, D.K. Explosion Source Term Factors for the Waste Solidification Building. S-CLC-F-00620, Rev. 0, Washington Savannah River Company, Aiken, SC, September 2007.

30. Kesterson, M. Predicted WSB Pipe Failure Modes Resulting from Hydrogen Explosion. U-CLC-F-00027, Rev. 0, Washington Savannah River Company, Aiken, SC, December 2007.

31. Keenan, G.L. WSB Aircraft Impact Frequencies (U). S-CLC-F-00616, Rev. 0, Washington Savannah River Company, Aiken, SC, September 2007.

32. Safety Design Strategy for the Waste Solidification Building. WSRC-TR-2007-0392, Rev. 0, Washington Savannah River Company, Aiken, SC, October 2007.

33. Brotherton, K.M. and Thoman, D.C. WSB Radiological Consequence Analysis. S-CLC-F-00617, Rev. 1, Washington Savannah River Company, Aiken, SC, June 2008.

34. Environmental Impact Statement on the Construction and Operation of a Proposed Mixed Oxide Fuel Fabrication Facility at the Savannah River Site, South Carolina. U.S. Nuclear Regulatory Commission, Office of Nuclear Material Safety and Safeguards, Washington, DC, January 2005.

35. Safety Basis Strategy for the Waste Solidification Building. WSRC-TR-2007-00117, Rev. 0, Washington Savannah River Company, Aiken, SC, April 2007.

36. Preparation of Safety Basis Documents for Transuranic (TRU) Waste Facilities. DOE-STD-5506-2007, U.S. Department of Energy, Washington, DC, April 2007.

37. Software Quality Assurance Implementation Checklist for Software Desigated with an A through E Classification and SSC Software Lifecycle Classification. "eCHAP," WSRC-RP-2007-00798, Rev. 0, Washington Safety Management Solutions, September 2007.

3.6 TABLES

Table 3.3-1 Waste Solidification Building Control Set

Control	Attribute	Safety Function	FC	TSR	Event Type	Reference	Chapter 4	Chapter 5
HAW PVVS	Confinement	Limits the consequences to facility workers from an explosion in the fluidic transfer pump charge vessel by providing filtration of airborne hazardous material.	Safety Significant	SSC (LCO)	Explosion	LCO 3.1.1	4.4.4	5.5.1.1
		Related Events: HAL-2-008						
	Dilution air flow (qualified to appropriate seismic performance criteria)	Prevents an explosion from occurring in the HAW vessels and in a cementation area drum (when connected to the filling station) by maintaining the flammable gas concentration below 25% of the LFL by providing sufficient dilution flow.	Safety Significant	SSC (LCO)	Explosion	LCO 3.1.1	4.4.4	5.5.1.1
		Related Events: CEM-2-002, HAL-2-005, HAL-2-006						
		Prevents an explosion from occurring in HAW vessels by maintaining the flammable gas concentration below 25% of the LFL by providing sufficient dilution flow during and after a seismic event.	Safety Significant	SSC (LCO)	NPH	LCO 3.1.1	4.4.4	5.5.1.1
		Related Events: FW-7-002, FW-7-004						
	Dual trains separated by a fire barrier that (qualified to appropriate fire rating and seismic performance criteria)	Limits the consequences to all workers from a post-seismic fire by continuing to provide filtration of airborne hazardous material released from HAW vessels during and after a seismic event.	Safety Significant	SSC (LCO)	NPH	LCO 3.1.1	4.4.4	5.5.1.1
		Related Events: FW-7-004						
	HAW PVV external duct to stack	HAW PVV system continues to provide dilution flow and negative pressure during external event.	Safety Significant	SSC (DF)	External	DF 4.1	4.4.4	5.6
		Related Event: FW-6-001, FW-6-003						
HAW process room ventilation	Filtration of hazardous material (radioactive or chemical)	Limits the consequences to the facility worker outside the HAW process room by providing filtration of any airborne hazardous material that is released by spill or explosion in the process room.	Safety Significant	SSC (LCO)	Explosion, Spill	LCO 3.1.2	4.4.5.1	5.5.1.2
		Related Events: HAL-2-007, HAL-3-003, HAL-3-003a, HAL-3-003b HAL-3-004, HAL-3-005, HAL-3-006						
	Confinement (qualified to appropriate seismic performance criteria)	Limits the consequences to the facility worker outside the HAW process room by continuing to provide confinement of any airborne hazardous material that is in the HAW process room during and after a seismic event.	Safety Significant	SSC (LCO)	NPH	LCO 3.1.2	4.4.5.1	5.5.1.2
		Related Events: FW-7-002, FW-7-003 FW-7-004, FW-7-005						
HAW cementation enclosure ventilation	Filtration of hazardous material (radioactive or chemical)	Limits the consequences to the facility workers by providing filtration of any airborne hazardous material that is released by spill in the HAW cementation enclosure.	Safety Significant	SSC (LCO)	Spill	LCO 3.1.3	4.4.5.2	5.5.1.3
		Related Events: CEM-3-001, CEM-3-002, CEM-3-003						

Table 3.3-1 Waste Solidification Building Control Set (continued)

Control	Attribute	Safety Function	FC	TSR	Event Type	Reference	Chapter 4	Chapter 5
HAW sample glovebox ventilation	Filtration of hazardous material (radioactive or chemical)	Limits the consequences to the facility workers by providing filtration of any airborne hazardous material that is released by spill in the sample glovebox.	Safety Significant	SSC (LCO)	Spill	LCO 3.1.4	4.4.5.3	5.5.1.4
		Related Events: HAL-3-008						
Laboratory glovebox ventilation	Filtration of hazardous material (radioactive or chemical)	Limits the consequences to the workers by providing filtration of any airborne hazardous material that is released by spill in the laboratory glovebox.	Safety Significant	SSC (LCO)	Spill	LCO 3.1.5	4.4.5.4	5.5.1.5
		Related Events: LAB-3-005						
Fire suppression system (HAW area and cementation area)	HAW area fire suppression subsystem	Limits the consequences to all workers by mitigating the fires such that a significant release does not occur.	Safety Significant	SSC (LCO)	Fire	LCO 3.1.5	4.4.6	5.5.1.6
		Related Events: FW-1-001, HAL-1-001						
	Cementation area fire suppression subsystem	Limits the consequences to facility workers by mitigating the fires such that a significant release does not occur.	Safety Significant	SSC (LCO)	Fire	LCO 3.1.5	4.4.6	5.5.1.6
		Related Event: CEM-1-001						
HAW evaporator high steam pressure interlock	Prevention of HAW steam pressures greater than 25 psig	Prevents rapid TBP decomposition by preventing evaporator steam coil pressures from exceeding 25 psig, thus, preventing HAW from reaching the temperature required for this reaction.	Safety Significant	SSC (LCO)	Explosion	LCO 3.1.7	4.4.7	5.5.1.7
		Related Events: HAL-2-004a						
HAW evaporator high temperature interlock	Prevention of HAW bulk liquid temperatures greater than 130º C	Prevents rapid TBP decomposition by preventing HAW in the evaporator from exceeding 130º C, the minimum temperature required for this reaction.	Safety Significant	SSC (LCO)	Explosion	LCO 3.1.8	4.4.7	5.5.1.8
		Related Events: HAL-2-004a						
LAW evaporator high steam pressure interlock	Prevention of LAW steam pressures greater than 25 psig	Prevents rapid TBP decomposition by preventing evaporator steam coil pressures from exceeding 25 psig, thus, preventing LAW from reaching the temperature required for this reaction.	Safety Significant	SSC (LCO)	Explosion	LCO 3.1.7	4.4.7	5.5.1.7
		Related Events: LAL-2-004a						
LAW evaporator high temperature interlock	Prevention of LAW bulk liquid temperatures greater than 130º C	Prevents rapid TBP decomposition by preventing LAW in the evaporator from exceeding 130º C, the minimum temperature required for this reaction.	Safety Significant	SSC (LCO)	Explosion	LCO 3.1.8	4.4.7	5.5.1.8
		Related Events: LAL-2-004a						
Diesel generator	Secondary electric power supply	Provide electric power to active Safety Significant controls when power is not available from the primary electric power supply.	Safety Significant	SSC (LCO)	Spill, Explosion, External, NPH	LCO 3.1.9	4.4.9	5.5.1.9
		Related Events: CEM-2-002, FW-6-001, FW-7-002, FW-7-004, HAL-2-005, HAL-2-006, HAL-2-007, HAL-3-003, HAL-3-003a, HAL-3-003b, HAL-3-004, HAL-3-005, HAL-3-006, HAL-3-011						
WSB building design and construction	Building and HAW process area walls and roof qualified to appropriate tornado and high wind criteria	Limits the consequences to all workers during and after high winds and tornadoes by maintaining its structural integrity to protect safety SSCs.	Safety Significant	SSC (DF)	NPH	DF 1.1	4.4.1.1	5.6
		Related Events: FW-7-001						

Table 3.3-1 Waste Solidification Building Control Set (continued)

Control	Attribute	Safety Function	FC	TSR	Event Type	Reference	Chapter 4	Chapter 5
	Building and HAW process area walls and roof qualified to appropriate seismic performance criteria	Limits the consequences to all workers during and after a seismic event by maintaining its structural integrity and protecting other safety SSCs.	Safety Significant	SSC (DF)	NPH	DF 1.1	4.4.1.1	5.6
		Related Events: FW-7-002						
HAW area design and construction	Fire barrier around and between the two PVVS trains (qualified to appropriate seismic performance criteria)	Limits consequences to all workers from fires by preventing fires from propagating into or between the duplicate PVVS rooms and SSCs during and after seismic event.	Safety Significant	SSC (DF)	Fire	DF 1.2	4.4.1.2	5.6
		Related Events: FW-1-001, FW-7-004, FW-7-005						
	Walls and stainless liner	Limits consequences to the facility workers due to spills by containing the spills to the immediate area.	Safety Significant	SSC (DF)	Spill	DF 1.2	4.4.1.2	5.6
		Related Events: HAL-3-003, HAL-3-003a, HAL-3-003b, HAL-3-004, HAL-3-005, HAL-3-006						
	Fire barrier around the haw process room (qualified to appropriate seismic performance criteria)	Limits consequences to all workers from fires by preventing fires from propagating into or out of the HAW Process Room.	Safety Significant	SSC (DF)	Fire, External	DF 1.2	4.4.1.2	5.6
		Related Events: FW-1-001, FW-6-001, HAL-1-001						
		Limits consequences to all workers from a post-seismic fire by preventing fire propagation into or out of the HAW process area during and after a seismic event.	Safety Significant	SSC (DF)	NPH	DF 1.2	4.4.1.2	5.6
		Related Events: FW-7-003, FW-7-004						
Cementation area design and construction	Fire barrier around the haw cementation area (qualified to appropriate seismic performance criteria)	Limits consequences to facility workers from fires by preventing fires from propagating into or out of the cementation area.	Safety Significant	SSC (DF)	Fire, External	DF 1.3	4.4.1.3	5.6
		Related Events: CEM-1-001, FW-1-001, FW-6-001						
		Limits consequences to facility workers from a post-seismic fire by preventing fire propagation into the cementation area during and after a seismic event.	Safety Significant	SSC (DF)	NPH	DF 1.3	4.4.1.3	5.6
		Related Events: FW-7-003, FW-7-004						
HAW process piping, valves, and vessels	HAW process piping, valves, and vessels (including steam and cooling coils) (qualified to the appropriate seismic performance criteria)	Limits consequences to facility workers and credited SSCs from an explosion by not fragmenting and causing physical injury.	Safety Significant	SSC (DF)	Explosion	DF 2.1, DF 2.2	4.4.2.1	5.6
		Related Events: HAL-2-007						
		Cooling coil design prevents release of HAW	Safety Significant	SSC (DF)	Spill	DF 2.2	4.4.2.1	5.6
		Related Event: HAL-3-10						
		Limits the consequences to all workers from a post-seismic spill by preventing spills during and after a seismic event.	Safety Significant	SSC (DF)	NPH	DF 2.1, DF 2.2	4.4.2.1	5.6
		Related Event: FW-7-002						
	HAW vessel overflow lines	Limit consequences to the facility workers from a spill in the process room by containing overflow.	Safety Significant	SSC (DF)	Spill	DF 2.1, DF 2.2	4.4.2.1	5.6
		Related Event: HAL-3-003, HAL-3-003a, HAL-3-003b						

Table 3.3-1 Waste Solidification Building Control Set (continued)

Control	Attribute	Safety Function	FC	TSR	Event Type	Reference	Chapter 4	Chapter 5
		Protects initial conditions assumed for evaluation of flammable gas generation in the HAW process vessels by establishing the HAW process vessels maximum capacity and minimum headspace	Safety Significant	SSC (DF)	Explosion	DF 2.1, DF 2.2	4.4.2.1	5.6
		Related Event: HAL-2-005						
	Evaporator vessel design	Protects initial conditions assumed for evaluation of flammable gas generation in the HAW process vessels by establishing the HAW process vessels maximum capacity and minimum headspace.	Safety Significant	SSC (DF)	Explosion	DF 2.2	4.4.2.1	5.6
		Related Event: HAL-2-006						
	HAW fluidic transfer pump charge vessel	Limits consequences to the FW from an explosion by not failing in a fashion that will cause failure of the HAW process vessels.	Safety Significant	SSC (DF)	Explosion	DF 2.2	4.4.2.1	5.6
		Related Event: HAL-2-008						
	HAW process vessels (provide confinement of HAW material during and following a fluidic transfer pump charge vessel explosion)	Limits consequences to the facility worker during an explosion by not failing during or after a detonation (and the subsequent pressure spike) in the fluidic transfer pump charge vessel.	Safety Significant	SSC (DF)	Explosion	DF 2.2	4.4.2.1	5.6
		Related Event: HAL-2-008						
HAW sample lines	Jacketed HAW sample line	Limits consequences to the facility workers from a leak in the sample line by directing HAW material to the lined portion of the HAW process room.	Safety Significant	SSC (DF)	Spill	DF 2.3	4.4.2.2	5.6
		Related Events: HAL-3-006, HAL-3-007						
	HAW sample line (qualification to appropriate seismic performance criteria)	Limits consequences to the facility workers from a post-seismic spill by preventing the spill of HAW material during and after a seismic event.	Safety Significant	SSC (DF)	NPH	DF 2.3	4.4.2.2	5.6
		Related Event: FW-7-002						
		Limits consequences to all workers by not failing in a manner that compromises the jacket and not fragmenting to cause worker injury	Safety Significant	SSC (DF)	Explosion	DF 2.3	4.4.2.2	5.6
		Related Event: HAL-2-007						
HAW cementation transfer line	Jacketed HAW cementation transfer line	Limits consequences to the facility workers from a spill by containing leaks when the core pipe is damaged.	Safety Significant	SSC (DF)	Spill	DF 2.4	4.4.2.3	5.6
		Related Events: CEM-3-001, HAL-3-002						
		Limits consequences to the facility workers from an explosion by containing leaks and directing them to a collection point.	Safety Significant	SSC (DF)	Explosion	DF 2.4	4.4.2.3	5.6
		Related Events: HAL-2-007						
		Limits consequences to the facility worker from an explosion by not failing in a manner that compromises the confinement function of the jacket. and not fragmenting to cause worker injury	Safety Significant	SSC (DF)	Explosion	DF 2.4	4.4.2.3	5.6

Table 3.3-1 Waste Solidification Building Control Set (continued)

Control	Attribute	Safety Function	FC	TSR	Event Type	Reference	Chapter 4	Chapter 5
		Related Events: HAL-2-007						
	HAW cementation transfer line pipe chase	Limits consequences to facility workers from a spill by protecting the HAW cementation transfer line from impact.	Safety Significant	SSC (DF)	Spill	DF 2.4	4.4.2.3	5.6
		Related Events: HAL-3-001						
	HAW cementation transfer line core pipe	Limits consequences to facility workers by containing HAW material.	Safety Significant	SSC (DF)	Spill	DF 2.4	4.4.2.3	5.6
		Related Events: CEM-3-001						
	HAW cementation transfer line core pipe (qualification to appropriate seismic performance criteria)	Limits consequences to facility workers from a seismic spill by preventing the breaching of a core pipe during and after a seismic event.	Safety Significant	SSC (DF)	NPH	DF 2.4	4.4.2.3	5.6
		Related Events: FW-7-002						
HAW transfer line	HAW transfer line jacket	Limits consequences to the facility workers from a spill by containing leaks when the core pipe is damaged.	Safety Significant	SSC (DF)	Spill	DF 2.5	4.4.3	5.6
		Related Events: TL-3-002						
		Limits consequences to the facility worker from an explosion by containing leaks and directing them to a collection point.	Safety Significant	SSC (DF)	Explosion	DF 2.5	4.4.3	5.6
		Related Events: TL-2-002						
		Limits consequences to facility workers from an explosion by core pipe not failing in a manner that compromises the confinement function.	Safety Significant	SSC (DF)	Explosion	DF 2.5	4.4.3	5.6
		Related Events: TL-2-002						
	HAW transfer line core pipe (qualification to appropriate seismic performance criteria)	Limits consequences to facility workers from a post-seismic spill by preventing the breaching of a core line during and after a seismic event.	Safety Significant	SSC (DF)	NPH	DF 2.5	4.4.3	5.6
		Related Events: TL-7-002						
HAW cementation enclosure	confinement of radioactive material spills	Limits consequences to the facility workers from a spill by confining spills inside the HAW Cementation Enclosure.	Safety Significant	SSC (DF)	Spill	DF 3.1	4.4.8.1	5.6
		Related Events: CEM-3-001, CEM-3-002, CEM-3-003						
HAW sample glovebox	Confinement of hazardous material spills (radioactive, chemical)	Limits consequences to the facility workers from a spill by confining spills inside the HAW Sample Glovebox.	Safety Significant	SSC (DF)	Spill	DF 3.2	4.4.8.2	5.6
		Related Events: HAL-3-008						
Laboratory glovebox	Confinement of hazardous material spills (radioactive, chemical)	Prevents consequences to the immediate facility worker from spills by preventing hazardous material from contacting them.	Safety Significant	SSC (DF)	Spill	DF 3.3	4.4.8.3	5.6
		Related Events: LAB-3-005						

Table 3.3-1 Waste Solidification Building Control Set (continued)

Control	Attribute	Safety Function	FC	TSR	Event Type	Reference	Chapter 4	Chapter 5
Inventory Control Program	Facility radionuclide limits	Limits the consequences to all workers by limiting the MAR to quantities that were assumed during the hazard and accident analyses.	*N/A	SAC (LCO)	Fire, Explosion, Spill, External, NPH	LCO 3.2.6	4.5.7	5.5.2.6
		Related Events: CEM-1-001, CEM-1-002, FW-1-001, FW-6-001, FW-7-001, FW-7-003, HAL-1-001, HAL-2-007, HAL-2-008, LAB-3-005						
	TRU drums at the waste storage pad	Inventory of TRU waste drums at the waste storage pad limiting the MAR to quantities that were assumed during the hazard and accident analyses.	*N/A	SAC (LCO)	Fire, Explosion, Spill	LCO 3.2.7	4.5.7	5.5.2.7
		Related Events: WH-1-002						
Fire Protection Program	Combustible controls	Limits the consequences to all workers from the release of radioactive material during a fire by reducing the frequency and intensity of potential fires.	*N/A	SAC (LCO)	Fire, External, NPH	LCO 3.2.4	4.5.6	5.5.2.4
		Related Events: FW-1-001, FW-7-003, HAL-1-001						
	Flammable liquid and gas storage prohibited in the process room	Limits the consequences to all workers from the release of radioactive material during a fire by reducing the frequency and intensity of potential fires.	*N/A	SAC (LCO)	Fire	LCO 3.2.5	4.5.6	5.5.2.5
		Related Events: HAL-1-001						
	Ensure adequate fire water supply	Limits the consequences to all workers from the release of radioactive material during a fire by ensuring adequate water supply is available.	*N/A	SMP	Fire			5.5.4
		Related Events: CEM-1-001, FW-1-001, HAL-1-001						
Waste Acceptance Criteria Program	Waste drums properly vented and packaged in accordance with tru waste acceptance criteria	Prevents explosion in a TRU waste drum by maintaining vent paths from the drum, thus preventing buildup of hydrogen and prohibiting the presence of flammable liquids in the waste drums, thus prohibiting the buildup of VOCs.	*N/A	SAC (LCO)	Explosion	LCO 3.2.2	4.5.3	5.5.2.2
		Related Events: CEM-2-001, WH-2-001						
	HAW radionuclide content limit	Protects initial conditions used in hydrogen generation rate calculations by limiting the radionuclide concentration of each HAW transfer.	*N/A	SAC (LCO)	Explosion	LCO 3.2.1	4.5.3	5.5.2.1
		Related Events: HAL-2-005, HAL-2-006						
		Limits the consequences to all workers by limiting the MAR to quantities that were assumed during the hazard and accident analyses.	*N/A	SAC (LCO)	Fire, Explosion, Spill, External, NPH	LCO 3.2.1	4.5.3	5.5.2.1
		Related Events: FW-1-001, FW-6-001, FW-6-003, FW-7-001, FW-7-002, FW-7-003, HAL-1-001, HAL-2-005, HAL-2-006, HAL-2-007, HAL-2-008, HAL-3-006, HAL-3-007, HAL-3-008, HAL-3-009, TL-2-002, TL-3-002, TL-3-004, TL-3-005, TL-7-002, WH-1-002						
	Fissile radionuclide content limit	Protects initial conditions assumed in criticality evaluations by limiting the uranium enrichment and quantity or fissile radionuclides.	*N/A	SAC (LCO)	Criticality	LCO 3.2.1	4.5.3	5.5.2.1
	Related Events: HAL-5-001, LAL-5-001							

Table 3.3-1 Waste Solidification Building Control Set (continued)

Control	Attribute	Safety Function	FC	TSR	Event Type	Reference	Chapter 4	Chapter 5
	Organic content (primarily TBP) limit	Prevents introduction of sufficient organic compounds result in a red oil explosion hazard.	*N/A	SAC (LCO)	Explosion	LCO 3.2.1	4.5.3	5.5.2.1
		Related Events: HAL-2-004, HAL-2-004a, LAL-2-004, LAL-2-004a						
Evaporator steam coils integrity protection	Steam coil integrity verification (prior to each evaporator operation)	Prevents HAW liquid from leaking into the steam system by verifying the steam coil integrity has not been compromised prior to operation of the steam system.	*N/A	SAC (LCO)	Spill	LCO 3.2.8	4.5.8	5.5.2.8
		Related Events: HAL-3-009	*N/A	SAC (LCO)	Spill	LCO 3.2.8	4.5.8	5.5.2.8
	Chemical control of steam	Prevents HAW liquid from leaking into the steam system by reducing corrosion of the HAW evaporator steam coil.			Spill			
		Related Events: HAL-3-009						
Transfer Control Program	Physical inspection and restrictions on transfer operations in lines that are temporarily exposed	Prevents release of radioactive material from an exposed HAW transfer line by requiring additional controls for transfer of HAW through an exposed HAW transfer line.	*N/A	SAC (LCO)	Spill	LCO 3.2.9	4.5.10	5.5.2.9
		Related Events: TL-3-002, TL-3-004, TL-3-005						
Radiological Protection Program	Use of secondary (sample) container	Limits consequences to the facility worker from spills outside the glovebox by containing HAW material released from the primary container.	*N/A	SAC (DA)	Spill		4.5.1	5.5.3
		Related Events: LAB-3-004						
	Procedures and equipment that prevent sample needles from contacting workers' hands	Limits consequences to the facility worker from puncturing the skin with a contaminated sample needle by preventing the needle from contacting the workers hand.	*N/A	SAC (DA)	Exposure		4.5.1	5.5.3
		Related Events: HAL-4-001, LAB-4-003						
	Appropriate worker protection controls for handling radioactive waste and laboratory samples	Limits consequences to the facility worker during handling of radioactive waste and radioactive samples by application of the appropriate procedures, PPE, monitoring and appropriate response.	*N/A	SMP	Spill, Exposure		4.5.1	5.5.3
		Related Events: LAB-3-004, WH-4-002						
	Appropriate worker protection controls for handling and working with radioactive material	Prevents or limits consequences to facility worker from radiation exposure and contamination by application of the appropriate procedures, PPE, monitoring of radiological conditions, and appropriate response.	*N/A	SMP	Spill			5.5.4
		Related Events: CEM-3-001, FW-6-001, HAL-3-002, HAL-3-003, HAL-3-003a, HAL-3-003b, HAL-3-004, HAL-3-005, HAL-3-006, HAL-3-007, HAL-3-008, HAL-3-011						

Table 3.3-1 Waste Solidification Building Control Set (continued)

Control	Attribute	Safety Function	FC	TSR	Event Type	Reference	Chapter 4	Chapter 5
Event Response Program	Worker response in the event of a fire	Limits the consequences to the facility workers from a waste handling fire that engulfs the TRU Waste Storage Pad by requiring appropriate response of workers.	*N/A	SAC (DA)	Fire		4.5.2	5.5.3
		Related Events: WH-1-002, CEM-1-001, CEM-1-002						
	Appropriate response.	Limits the consequences to all workers from release of radioactive or chemically hazardous material by directing workers away from hazardous conditions and other responses as appropriate.	*N/A	SMP	Fire, Spill, External, NPH			5.5.4
		Related Events: CEM-1-001, CEM-1-002, CEM-3-001, CEM-3-002, CEM-3-003, CEM-3-004, CEM-3-005, FW-1-001, FW-6-001, FW-7-003, HAL-1-001, HAL-2-007, HAL-3-001, HAL-3-002, HAL-3-003, HAL-3-003a, HAL-3-003b, HAL-3-004, HAL-3-005, HAL-3-006, HAL-3-007, HAL-3-008, HAL-3-011, TL-2-002, TL-3-005						
HAW Transfer Line Protection Program	Installation of an indicator over buried HAW transfer lines	Prevents breach of HAW transfer line due to inadvertent intrusion by providing indication of the proximity to the line.	*N/A	SAC (DA)	Spill		4.5.4	5.5.3
		Related Events: TL-3-004						
	Application of markings that clearly identify HAW transfer line locations	Prevents breach of HAW transfer line due to inadvertent intrusion by clearly designating the presence of an underground HAW transfer line.	*N/A	SAC (DA)	Spill		4.5.4	5.5.3
		Related Events: TL-3-004						
Site Work Control Program	Activities in the vicinity of WSB limited to those evaluated	Prevents unanalyzed external events by preventing construction and maintenance activities that have not been appropriately evaluated.	*N/A	SAC (DA)	External		4.5.9	5.5.3
		Related Events: FW-6-003						
Site clearance permit	Restrictions on excavation location and parameters	Prevents breach of HAW Transfer Line due to inadvertent intrusion by requiring a permit that will only be issued for excavation activities outside the vicinity of buried transfer lines.	*N/A	SMP	Spill			5.5.4
		Related Events: TL-3-004						
Structural Integrity Program	HAW cementation and HAW transfer line jacket inspections and requirements	Prevents HAW spill by ensuring that the integrity of the HAW cementation transfer line core pipe and jacket and the HAW transfer line core pipe and jacket are maintained	*N/A	SMP	Spill			5.5.4
		Related Events: CEM-3-001, HAL-3-002, TL-3-002						
Chemical Control Program	Identifies and controls hazardous chemicals	Prevents inadvertent formation of shock sensitive chemicals through identification and management of time sensitive chemicals	*N/A	SMP	Explosion			5.5.4
Traffic Control Program	Restrictions on where and how heavy vehicles travel	Prevents breach of buried HAW transfer lines due to the load of heavy equipment by prohibiting heavy vehicles above the transfer lines.	*N/A	SMP	Spill			5.5.4
		Related Events: TL-3-004						
	Speed limit, physical barriers (e.g., Jersey	Prevent breach of process room exterior wall by preventing a high-speed vehicular impact.	*N/A	SAC (DA)	External		4.5.10	5.5.3

Table 3.3-1 Waste Solidification Building Control Set (continued)

Control	Attribute	Safety Function	FC	TSR	Event Type	Reference	Chapter 4	Chapter 5
	barriers), or limited unobstructed "straight line" distance to Process Room	Related Events: FW-6-004						
Hoisting and Rigging Program	Evaluation of crane use adjacent to WSB facility	Prevents release of radioactive material due to the impact of a heavy load with the WSB by limiting crane usage in the vicinity to activities that will not compromise the WSB structure.	*N/A	SMP	External			5.5.4
		Related Events: FW-6-003						

*This administrative control was credited with performing a safety function that would require a Safety Significant SSC if the safety function were to be performed by an engineered feature.

Table 3.3-2 Frequency Evaluation Levels

Acronym	Description	Frequency Level (year-1)
A	Anticipated, Expected	$f \geq 10^{-2}$/yr.
U	Unlikely	$10^{-4} \leq f < 10^{-2}$/yr.
EU	Extremely Unlikely	$10^{-6} \leq f < 10^{-4}$/yr.
BEU	Beyond Extremely Unlikely	$f < 10^{-6}$/yr.

Table 3.3-3 Consequence Evaluation Levels for Hazard Receptors

Consequence Level (Abbreviation)		Offsite Public	Facility Worker	Co-Located Worker
High (H)	Non-rad/Non-chemical Injury		Prompt worker fatality, serious injury that is immediately life threatening or permanently disabling	Prompt worker fatality, serious injury that is immediately life threatening or permanently disabling
	Radiological	C ≥ 25.0 rem	C ≥ 100 rem or radiological material quantity exceeds HC-3 threshold (per DOE-STD-1027) or high consequence injury due to radiological release or exposure	C ≥ 100 rem or high consequence injury due to radiological release or exposure
	Chemical	C ≥ ERPG-2*	Uniform distribution of total release C ≥ ERPG-3 or high consequence injury due to chemical release or exposure	C ≥ ERPG-3 or ≥ 29 CFR 1910.119 TQ released or high consequence injury due to chemical release or exposure
Moderate (M)	Non-rad/Non-chemical Injury		Serious injury, no immediate loss of life, no permanent disabilities, hospitalization required	Serious injury, no immediate loss of life, no permanent disabilities, hospitalization required
	Radiological	5.0 ≤ C < 25 rem	25 ≤ C < 100 rem or moderate consequence radiological related injury	25 ≤ C < 100 rem or moderate consequence radiological related injury
	Chemical	ERPG-1 ≤ C < ERPG-2	Uniform distribution of total release ERPG-2 ≤ C < ERPG-3 or moderate consequence chemical related injuries	ERPG-2 ≤ C < ERPG-3 or moderate consequence chemical related injuries
Low (L)	Non-rad/Non-chemical Injury		Minor injuries, no hospitalization	Minor injuries, no hospitalization
	Radiological	0.5 ≤ C < 5.0 rem	5.0 ≤ C < 25 rem or low consequence radiological related injuries	5.0 ≤ C < 25 rem or low consequence radiological related injuries
	Chemical	*PEL-TWA ≤ C < ERPG-1	Uniform distribution of total release ERPG-1 ≤ C < ERPG-2 or low consequence chemical related injuries	ERPG-1 ≤ C < ERPG-2 or low consequence chemical related injuries
Negligible (N)	All	< Low	< Low	< Low

ERPG – Emergency Response Planning Guideline

Table 3.3-4 Consequence Related Controls Selection Criteria Matrix

Frequency → / Consequence ↓	Beyond Extremely Unlikely ($f < 10^{-6}$/yr)	Extremely Unlikely ($10^{-6} \leq f < 10^{-4}$/yr)	Unlikely ($10^{-4} \leq f < 10^{-2}$/yr)	Anticipated ($f \geq 10^{-2}$/yr)
High	**C/A3***	**A2**	**A1**	**A1**
Moderate	**C/B1****	**B1**	**B1**	**B1**
Low	**C**	**B**	**B**	**B**
Negligible	**C**	**C**	**C**	**C**

Region A1. Unmitigated events falling in Region "A1" due to radiological release require controls (Safety Class for the public and Safety Significant for workers), and are **highly recommended** for additional LOCs for all receptors per Reference 22. Unmitigated events falling in Region "A1," due to chemical release or prompt fatality (etc.), require Safety Significant controls and are **highly recommended** for additional Levels of Control per Reference 22. The desired result is that the mitigated consequence is moved well into the B region, and possibly the "C" region or the event is prevented.***

Region A2. Unmitigated events falling in Region "A2" due to radiological release require controls (Safety Class for the public and Safety Significant for workers), and are **recommended** for additional LOCs for all receptors per Reference 22. Unmitigated events falling in Region "A2," due to chemical release or prompt fatality (etc.), require Safety Significant controls and are **recommended** for additional LOCs per Reference 22. The desired result is that the mitigated consequence is moved well into the B region, and possibly the "C" region or the event is prevented.***

Region A3. Unmitigated events considered credible per WSRC Procedure Manual E7, Procedure 2.25 falling in Region "A3" due to radiological release require controls (Safety Class for the public and Safety Significant for workers), and are considered for additional LOCs for CW or public per Reference 22. Unmitigated events falling in Region "A3," due to chemical release or prompt fatality (etc.), require Safety Significant controls and are to be consideration for additional LOCs per Reference 22. The desired result is that the mitigated consequence is moved into the "B" or "C" region, or the event is prevented.***

Region B1. For unmitigated events having moderate "B1" consequences that challenge the high consequence criteria: Safety Class controls are required for radiological events affecting the public; Safety Significant controls are required for chemical events affecting workers or the public; and Safety Significant controls are required for non-radiological, non-chemical events that can cause death/acute physical to workers. For unmitigated events having moderate consequences that do not challenge the high consequence range, facility controls and/or safety programs should be selected. Documentation must be provided when facility controls or safety programs are not implemented.

Region B. Unmitigated events having low "B" consequences may require facility controls or safety programs. Justification must be provided when facility controls or safety programs are not implemented.

Region C. Events falling in Region "C" are not considered for controls. However, there may be events in this region that require the addition of facility controls because the frequency is higher than desired, the occurrence of the uncontrolled event is unacceptable to management in any event, or the uncontrolled event is unacceptable for programmatic or political reasons.

*** NPH , external events, and internal events in this frequency bin shall be addressed as required by WSRC Procedure Manual E7, Procedure 2.25, att. 8.8, section 8.8.1.**

**** Moderate consequence "B1" events considered credible in this frequency bin that challenge high consequence criteria shall be treated the same as A3 events (i.e., consistent with WSRC Procedure Manual E7, Procedure 2.25, att. 8.8, section 8.8.1). Moderate consequence events considered credible per WSRC Procedure Manual E7, Procedure 2.25 in this frequency range that do not challenge high consequences should consider facility controls or safety programs.**

***** When a preventive control strategy is used, there is no requirement to make the event BEU. See WSRC Procedure Manual E7, Procedure 2.25.**.

Table 3.3-5 WSB Radiological Inventories

High Activity Waste Stream		
Actinide	Grams	Curies
Am-241	1.83E+04	6.30E+04
Pu-238	5.90E-02	1.01E+00
Pu-239	1.06E+02	6.60E+00
Pu-240	1.04E+01	2.37E+00
Pu-241	1.18E+00	1.22E+02
Pu-242	1.18E-01	4.64E-04
Np-237	2.02E+03	1.42E+00
U-235	3.00E+00	5.83E-06
U-238	6.00E+00	2.12E-06
Pa-233	6.83E-05	1.42E+00
Low Activity Waste Stream		
Actinide	Grams	Curies
Am-241	3.10E-01	1.10E+00
Pu-238	1.50E-02	2.60E-01
Pu-239	2.80E+01	1.70+00
Pu-240	2.40E+00	5.40E-01
Pu-241	0	0
Pu-242	3.10E-02	1.20E-04
Np-237	1.36E+03	9.60E-01
U-234	1.50E-01	9.40E-04
U-235	2.94E+04	6.40E-02
U-236	7.50E-02	4.90E-06
U-238	3.03E+06	1.02E+00
Pa-233	4.60E-05	9.60E-01

Table 3.3-6 Worker Safety Events*

Event Type	Appendix A Event Number
Laboratory explosion	N/A
Laboratory loss of confinement	LAB-3-004, LAB-3-005
Waste handling fire	WH-1-002
Waste handling explosion	WH-2-001, CEM-2-001, CEM-2-002
Waste handling loss of confinement	N/A
Transfer line explosion	TL-2-002
Transfer line loss of confinement	TL-3-002, TL-3-004, TL-3-005
Transfer line natural phenomena events	TL-7-002
LAW explosion	LAL-2-004a
LAW loss of confinement	N/A
HAW fire	HAL-1-001, HAL-1-002, CEM-1-001, CEM-1-002
HAW explosion	HAL-2-001, HAL-2-002, HAL-2-003, HAL-2-004a, HAL-2-005, HAL-2-006, HAL-2-007, HAL-2-008
HAW loss of confinement	HAL-3-001, HAL-3-002, HAL-3-003,HAL-3-003a, HAL-3-003b, HAL-3-004, HAL-3-005, HAL-3-006, HAL-3-007, HAL-3-008, HAL-3-009, HAL-3-010, HAL-3-011, CEM-3-001, CEM-3-002, CEM-3-003, CEM-3-004, CEM-3-005
Contamination / exposure events	LAB-4-003, WH-4-002, HAL-4-001
Facility wide fire	FW-1-001
Facility wide external events	FW-6-001, FW-6-003, FW-6-004
Facility wide natural phenomena events	FW-7-001, FW-7-002, FW-7-003, FW-7-004, FW-7-005

*Events listed in this table require controls to mitigate or prevent consequences to FW or CW.

Table 3.3-7 Low Risk CHAP Events*

Event ID	Description
CEM-1-003	Fire in the LAW cementation enclosure results in a radioactive material release
CEM-4-001	Handling a high-dose container results in a radiological exposure
CSA-1-001	Area fire in the cold chemical storage area results in a release of material from the caustic or nitric acid tank
CSA-3-001	Overflow of the caustic or nitric acid storage tank during filling leads to a spill
CSA-3-002	Spill of caustic or nitric acid during filling of the tanks
CSA-3-003	Siphon occurs during filling of the caustic or acid tank resulting in a spill
CSA-3-004	Caustic or acid tank collapses due to vacuum/ over-pressurization resulting in a spill
CSA-3-005	Small leak of caustic or nitric acid to an occupied area
CSA-3-006	Chemical reaction in the caustic or nitric acid storage tank resulting in a release of material
CSA-3-007	Formation of acid mist or NOx during neutralization of tank cleaning
FW-6-002	Large aircraft impacts the facility, resulting in a fire and a radiological release
HAL-4-002	Excessive radiation exposure from the HAW vessels and piping
HAL-4-003	Excessive radiation exposure from the HAW containers
HAL-5-001	Criticality in the HAW vessel
HAL-7-001	Freezing results in a release of the HAW solution from the HAW vessel or piping (resulting in a design change to eliminate hazard)
HAL-8-001	Over-concentration of material in the HAW evaporator leads to excessively high activity in the overheads and/or bottoms
LAB-3-001	Low activity samples dropped by an operator in the WSB, but outside of the hood, resulting in a radiological release
LAB-3-002	Low activity samples dropped by an operator in the hood, resulting in a radiological release
LAB-3-003	Spill while dumping low activity samples in low activity drain, resulting in a radiological release
LAB-3-006	Propane cylinder ruptures (missile) and impacts high activity samples in the glovebox, resulting in a radiological release
LAB-3-007	Loss of adequate ventilation to the hood or glovebox, results in a radiological release
LAB-4-001	Radiological exposure while handling samples in the WSB, but outside of the hood or glovebox
LAB-4-002	Radiological exposure while handling samples in the glovebox
LAL-2-005	Hydrogen generation in a LAW vessel leads to a deflagration
LAL-2-006	Hydrogen generation in LAW evaporator leads to a deflagration
LAL-3-001	LAW solution leaks from the transfer line from the LAW process room to the LAW cementation
LAL-3-002	Spill of LAW liquid from a vessel or piping in the LAW process area
LAL-3-003	Too much LAW liquid waste is received, overflowing the receipt tank and resulting in spill of LAW liquid
LAL-3-004	Overflow or leak from the LAW evaporator results in spill of LAW liquid in the LAW area
LAL-3-005	Spill of LAW solution during sampling activity
LAL-3-006	Spill of LAW liquid in the LAW cementation area
LAL-3-007	LAW evaporator steam coil leak (LAW solution) results in LAW solution in steam system external to the LAW area.
LAL-3-008	Leak of LAW bottoms to cooling coils
LAL-3-009	Release of contaminated airborne material during cementation process
LAL-4-001	Internal uptake of LAW solution from needle puncture from sampling
LAL-5-001	Criticality in a LAW vessel
LAL-7-001	Freezing results in a release of LAW solution from the LAW vessel or piping
LAL-8-001	Over-concentration of material in the LAW evaporator leads to excessively high activity in the overheads

Event ID	Description
MIS-2-001	Leak of P-10 gas from PCM leads to explosion in WSB
MIS-2-002	Buildup of flammable gases in the battery room leads to an explosion
MIS-2-003	Pressure buildup in the steam boiler results in boiler explosion
MIS-8-001	Release of nitrogen results in asphyxiation
TL-2-001	Detonation as a result of the buildup of hydrogen in the MFFF stripped uranium stream or PDCF liquid stream (both sources of LAW liquid waste) transfer lines
TL-3-001	LAW receipt line breached inside of WSB, resulting in a radiological spill
TL-3-003	LAW receipt line breached outside of WSB, resulting in a radiological spill
TL-4-001	Direct dose to worker from the transfer line
TL-7-001	LAW receipt line breached outside of WSB, resulting in a radiological spill
VENT-3-001	Primary HEPA filter is dropped or damaged during change out
VENT-3-002	Ventilation system air reversal results in spread of contamination
WH-1-001	Fire involving a single TRU waste container within storage building, results in a radiological release
WH-1-003	Forklift fire damages a pallet of TRU waste drums in transit, results in a radiological release
WH-1-004	A fire develops in the TRU waste processing room of the WSB resulting in a radiological release
WH-1-005	A fire develops in the TRU waste processing room resulting in a radiological release
WH-1-006	A fire involving TRU waste develops in the WSB, resulting in a radiological release
WH-2-002	An explosion external to a TRU drum damages a container, resulting in a radiological release
WH-3-001	TRU waste container is breached, resulting in a radiological release
WH-3-002	Stacked TRU waste drums topple, resulting in a radiological release
WH-3-003	TRU waste container leaks at the seal due to over-pressurization, resulting in a radiological release
WH-4-001	Handling high dose container, results in radiological exposure
WH-8-001	Physical injury due to the handling of container

*Events listed in this table do not require safety significant controls to mitigate or prevent consequences.

Table 3.3-8 Accident Selection

Hazard Event Type	*Unmitigated Hazard Analysis Events that Challenge Onsite Evaluation Criteria and Represent Situations of Concern	Selected DBA
Fire	WH-1-002, HAL-1-001, HAL-1-002, FW-100-1, CEM-1-001, CEM-1-002	HAL-1-001
Explosion	WH-2-001, TL-2-002, LAL-2-004a, HAL-2-001, HAL-2-002, HAL-2-003, HAL-2-004a, HAL-2-005, HAL-2-006, HAL-2-007, HAL-2-008, CEM-2-001, CEM-2-002	HAL-2-005
Loss of containment	LAB-3-004, LAB-3-005, TL-3-002, TL-3-004, TL-3-005, HAL-3-001, HAL-3-002, HAL-3-003, HAL-3-003a, HAL-3-003b, HAL-3-004, HAL-3-005, HAL-3-006, HAL-3-007, HAL-3-008, HAL-3-009, HAL-3-010, HAL-3-011	HAL-3-003a
Contamination /exposure	LAB-4-003, WH-4-002, HAL-4-001	None selected. Consequences, though potentially significant to the FW, represent a minor onsite and negligible offsite impact. Addressed in worker safety section.
Criticality	No plausible criticality events were identified	NA
External hazards	FW-6-001, FW-6-003, FW-6-004	FW-6-001
Natural phenomena	TL-7-002, FW-7-001, FW-7-002, FW-7-003, FW-7-004, FW-7-005	FW-7-001, FW-7-004

*Events listed in this column require controls to mitigate or prevent consequences to FW or CW.

Table 3.3-9. MFFF High Activity Waste

During PDCF Feed (Annual Inventory -10,130 gals)										
Chemicals	**Inventory (lbs)**	**NFPA Health Hazard Rating**	**RQ from 40 CFR 302.4 (lbs)**	**TQ from 29 CFR 1910 (lbs)**	**TQ from 40 CFR 68 (lbs)**	**TPQ from 40 CFR 355 (lbs)**	**Exceed RQ?**	**Exceed TQ or TPQ?**	**Screened (colocated worker and public)?**	**DOE-STD-1189 Justification for Screening**
Americium Stream (2,999 gals)										
Americium	54	NL	Varies with isotope	NL	NL	NL	Not Estimated	N	N	
Plutonium	0.32	NL	Varies with isotope	NL	NL	NL	Not Estimated	N	N	
Neptunium	5.97	NL	Varies with isotope	NL	NL	NL	Not Estimated	N	N	
Gallium	112	NL	Varies with isotope	NL	NL	NL	Not Estimated	N	N	
Silver	292.3	NL	1000	NL	NL	NL	N	N	Y	No listed RQ, TQ, TPQ or NFPA hazard rating, not easily dispersible.
HNO_3 (as 9.4 M or 46 wt% Nitric Acid)	14,820	3	1000	NL	NL	1000	Y	N[1]	Y	Low vapor pressure, minimal airborne exposure hazard[3].
Alkaline Stream (3,142 gals)										
Uranium	0.03	NL	Varies with isotope	NL	NL	NL	Not Estimated	N	N	
Plutonium	0.03	NL	Varies with isotope	NL	NL	NL	Not Estimated	N	N	
Sodium Hydroxide (from the Sodium)	703	3	1000	NL	NL	NL	N	N	Y	Low vapor pressure, minimal airborne exposure hazard[4].
Excess Acid Stream (3,989 gals)										
HNO_3 (as 13.6 M or 62 wt% Nitric Acid)	28,550	3	1000	NL	NL	1000	Y	N[1]	N	

Table 3.3-9. MFFF High Activity Waste (continued)

During Alternate Feed Stock Processing (Annual Inventory -8,803 gals)[2]										
Chemicals	**Inventory (lbs)**	**NFPA Health Hazard Rating**	**RQ from 40 CFR 302.4 (lbs)**	**TQ from 29 CFR 1910 (lbs)**	**TQ from 40 CFR 68 (lbs)**	**TPQ from 40 CFR 355 (lbs)**	**Exceed RQ?**	**Exceed TQ or TPQ?**	**Screened (colocated worker and public)?**	**DOE-STD-1189 Justification for Screening**
Americium Stream (4,343 gals)										
Americium	32.3	NL	Varies with isotope	NL	NL	NL	Not Estimated	N	N	
Plutonium	0.278	NL	Varies with isotope	NL	NL	NL	Not Estimated	N	N	
Neptunium	5.97	NL	Varies with isotope	NL	NL	NL	Not Estimated	N	N	
Silver	371	NL	1000	NL	NL	NL	N	N	Y	No listed RQ, TQ, TPQ or NFPA hazard rating, not easily dispersible.
HNO_3 (as 4.8 M or 26 wt% Nitric Acid)	10970	3	1000	NL	NL	1000	Y	N[1]	Y	Low vapor pressure, minimal airborne exposure hazard[3].
Alkaline Stream (3,139 gals)										
Uranium	0.026	NL	Varies with isotope	NL	NL	NL	Not Estimated	N	N	
Plutonium	0.026	NL	Varies with isotope	NL	NL	NL	Not Estimated	N	N	
Sodium Hydroxide (from the Sodium)	703	3	1000	NL	NL	NL	N	N	Y	Low vapor pressure, minimal airborne exposure hazard[4].
Excess Acid Stream (1,321 gals)										
Americium	0.00021	NL	Varies with isotope	NL	NL	NL	Not Estimated	N	Y	Insignificant compared to Americium stream
HNO_3 (as 13.6 M or 62 wt% Nitric Acid)	9,450	3	1000	NL	NL	1000	Y	N[1]	N	

Table 3.3-9. MFFF High Activity Waste (continued)

Footnotes

NL = Not Listed

[1] The TQs are only valid for at least 80 to 94 wt % nitric acid. The TPQ for nitric acid has no indicated weight percent limitations, and is the same as that listed as the RQ (1000 lbs). Therefore the TPQ is considered "not applicable" for this wt % (< 80%) of nitric acid, for FHC evaluation purposes.

[2] Data was obtained from Table 1 in X-CLC-F-00391 (Rev. D) and includes only the major contributors in the stream. Any of these streams may be processed at a given time.

[3] Because of the low vapor pressure of HNO_3 in nitric acid solutions at lower concentrations, it is an acceptable practice at SRS to screen out nitric acid solutions of 50 wt% or less as an airborne exposure hazard to the 100m and offsite receptor.

[4] NaOH is a dissolved solid with a very low vapor pressure in solution and is commonly used in industry. It is an acceptable practice at SRS to screen out this chemical as an airborne exposure hazard to the 100m and offsite receptor.

Table 3.3-10. MFFF LAW (Stripped Uranium)

During PDCF Feed (Annual Inventory - 43,850 gals)[2]										
Chemicals	**Inventory (lbs)**	**NFPA Health Hazard Rating**	**RQ from 40 CFR 302.4 (lbs)**	**TQ from 29 CFR 1910 (lbs)**	**TQ from 40 CFR 68 (lbs)**	**TPQ from 40 CFR 355 (lbs)**	**Exceed RQ?**	**Exceed TQ or TPQ?**	**Screened (colocated worker and public)?**	**DOE-STD-1189 Justification for Screening**
Uranium	6738	NL	Varies with isotope	NL	NL	NL	Not Estimated	N	N	
Plutonium	0.04	NL	Varies with isotope	NL	NL	NL	Not Estimated	N	N	
Neptunium	2.99	NL	Varies with isotope	NL	NL	NL	Not Estimated	N	N	
HNO_3 (as 0.138 M or <1 wt% Nitric Acid)	3183	3	1000	NL	NL	1000	Y	N[1]	Y	Low vapor pressure, minimal airborne exposure hazard[3].

Footnotes

NL = Not Listed

[1] The TQs are only valid for at least %80 to %94 weight percent nitric acid. The TPQ for nitric acid has no indicated weight percent limitations, and is the same as that listed as the RQ (1000 lbs). Therefore the TPQ is considered "not applicable" for this weight percent (< %80) of nitric acid, for FHC evaluation purposes.

[2] Data was obtained from Table 3 in X-CLC-F-00391 (Rev. D). The combined volume capacity of all LAW tanks (from S-CLC-F-00608, Rev. A) is 24100 gal. Therefore, not all material from a batch of this feed could fit in the facility at one time and therefore this is a conservative inventory.

[3] Because of the low vapor pressure of HNO_3 in nitric acid solutions at lower concentrations, it is an acceptable practice at SRS to screen out nitric acid solutions of 50 wt% or less as an airborne exposure hazard to the 100m and offsite receptor.

Table 3.3-10. MFFF Low Activity Waste (continued)

During Alternate Feed Stock Processing (Annual Inventory - 41,528 gals)[2]										
Chemicals	**Inventory (lbs)**	**NFPA Health Hazard Rating**	**RQ from 40 CFR 302.4 (lbs)**	**TQ from 29 CFR 1910 (lbs)**	**TQ from 40 CFR 68 (lbs)**	**TPQ from 40 CFR 355 (lbs)**	**Exceed RQ?**	**Exceed TQ or TPQ?**	**Screened (colocated worker and public)?**	**DOE-STD-1189 Justification for Screening**
Uranium	6064	NL	Varies with isotope	NL	NL	NL	Not Estimated	N	N	
Plutonium	0.04	NL	Varies with isotope	NL	NL	NL	Not Estimated	N	N	
Neptunium	2.99	NL	Varies with isotope	NL	NL	NL	Not Estimated	N	N	
HNO_3 (as 0.139 M or <1 wt% Nitric Acid)	3037	3	1000	NL	NL	1000	Y	N[1]	Y	Low vapor pressure, minimal airborne exposure hazard[3].

Footnotes

NL = Not Listed

[1] The TQs are only valid for at least %80 to %94 weight percent nitric acid. The TPQ for nitric acid has no indicated weight percent limitations, and is the same as that listed as the RQ (1000 lbs). Therefore the TPQ is considered "not applicable" for this weight percent (< %80) of nitric acid, for FHC evaluation purposes.

[2] Data was obtained from Table 3 in X-CLC-F-00391 (Rev. D). The combined volume capacity of all LAW tanks (from S-CLC-F-00608, Rev. A) is 24100 gal. Therefore, not all material from a batch of this feed could fit in the facility at one time and therefore this is a conservative inventory.

[3] Because of the low vapor pressure of HNO_3 in nitric acid solutions at lower concentrations, it is an acceptable practice at SRS to screen out nitric acid solutions of 50 wt% or less as an airborne exposure hazard to the 100m and offsite receptor.

Table 3.3-10. MFFF Low Activity Waste (continued)

LAW PDCF Laboratory Liquid Waste (13,100 gals)[2]										
Chemicals	**Inventory (lbs)**	**NFPA Health Hazard Rating**	**RQ from 40 CFR 302.4 (lbs)**	**TQ from 29 CFR 1910 (lbs)**	**TQ from 40 CFR 68 (lbs)**	**TPQ from 40 CFR 355 (lbs)**	**Exceed RQ?**	**Exceed TQ or TPQ?**	**Screened (colocated worker and public)?**	**DOE-STD-1189 Justification for Screening**
Uranium	0.033	NL	Varies with isotope	NL	NL	NL	Not Estimated	N	N	
Plutonium	0.033	NL	Varies with isotope	NL	NL	NL	Not Estimated	N	N	
HNO_3[3] (0.2 M or ~1%)	1346	3	1000	NL	NL	1000	Y	N[1]	Y	Low vapor pressure, minimal airborne exposure hazard[10].
H_2S[4]	7.1	3	100	1500	10,000	500	N	N	Y	Low concentrations and small amounts, well below RQs, TQs and TPQs.
HCl[5]	44	3	5000	5000	5000[7]	500[9]	N	N	Y	Low concentrations and small amounts, well below RQs, TQs and TPQs.
HF[6]	1.1	4	100	1000	1000[8]	100	N	N	Y	Low concentrations and small amounts, well below RQs, TQs and TPQs.
Barium	1.3	NL	1000	NL	NL	NL	N	N	Y	Low volatility, low concentration in solution, not easily dispersible.
Beryllium	4.4E-05	NL	1	NL	NL	NL	N	N	Y	Low volatility, low concentration in solution, not easily dispersible.

Footnotes

NL = Not Listed

[1] The TQs are only valid for at least 80 to 94 wt % nitric acid. The TPQ for nitric acid has no indicated weight percent limitations, and is the same as that listed as the RQ (1000 lbs). Therefore the TPQ is considered "not applicable" for this wt % (< %80) of nitric acid, for FHC evaluation purposes.

[2] Data was obtained from Table 1 in X-CLC-F-00391 (Rev. D).

[3] Assumes the entire weight of nitrate salts is HNO_3.

[4] Assumes the weight of sulfide is from H_2S.

[5] Assumes the weight of chloride is from HCl.

[6] Assumes the weight of fluoride is from HF.

[7] TQ is for pure hydrogen chloride (anhydrous) and would not apply to the low concentrations in this waste.

[8] TQ is for hydrofluoric acid at concentrations of 50% or greater and would not apply to the low concentrations in this waste.

[9] TPQ is for hydrogen fluoride gas and would not apply to aqueous hydrogen fluoric acid.

[10] Because of the low vapor pressure of HNO_3 in nitric acid solutions at lower concentrations, it is an acceptable practice at SRS to screen out nitric acid solutions of 50 wt% or less as an airborne exposure hazard to the 100m and offsite receptor.

Table 3.3-11. Bulk Storage Inventory

Chemicals	Inventory (gals)	Inventory (lbs)	NFPA Health Hazard Rating	RQ from 40 CFR 302.4 (lbs)	TQ from 29 CFR 1910 (lbs)	TQ from 40 CFR 68 (lbs)	TPQ from 40 CFR 355 (lbs)	Exceed RQ?	Exceed TQ or TPQ?	Screened for colocated worker and public?	DOE-STD-1189 Justification for Screening
Nitric Acid (50 wt%)	350	3800	3	1000	NL	NL	1000	Y	N[1]	Y	Low vapor pressure, minimal airborne exposure hazard[2].
Sodium Hydroxide (50 wt%)	4500	58,000	3	1000	NL	NL	NL	Y	N	Y	Low vapor pressure, minimal airborne exposure hazard[3].
Portland Cement			NL	NL	NL	NL	NL	N	N	Y	No listed RQ, TQ, TPQ or NFPA hazard rating - SIH.
Fly Ash			NL	NL	NL	NL	NL	N	N	Y	No listed RQ, TQ, TPQ or NFPA hazard rating - SIH.
Zirconium Silicate			NL	NL	NL	NL	NL	N	N	Y	No listed RQ, TQ, TPQ or NFPA hazard rating - SIH.
Battery Acid (33.5% Sulfuric Acid)		< 100	3	1000	NL	NL	1000	N	N	Y	Product used by general public and manipulated by one person
Diesel Fuel (No. 1)			0	NL	NL	NL	NL	N	N	Y	NFPA Health Hazard Rating below 3 and common SIH

Footnotes

NL = Not Listed

[1] The TQs are only valid for at least 80 to 94 wt % nitric acid. The TPQ for nitric acid has no indicated weight percent limitations, and is the same as that listed as the RQ (1000 lbs). Therefore the TPQ is considered "not applicable" for this weight percent (< %80) of nitric acid, for FHC evaluation purposes.

[2] Because of the low vapor pressure of HNO_3 in nitric acid solutions at lower concentrations, it is an acceptable practice at SRS to screen out nitric acid solutions of 50 wt% or less as an airborne exposure hazard to the 100m and offsite receptor.

[3] NaOH is a dissolved solid with a very low vapor pressure in solution and is commonly used in industry. It is an acceptable practice at SRS to screen out this chemical as an airborne exposure hazard to the 100m and offsite receptor.

[4] The TQs are only valid for at least %80 to %94 weight percent nitric acid. The TPQ for nitric acid has no indicated weight percent limitations, and is the same as that listed as the RQ (1000 lbs). Therefore the TPQ is considered "not applicable" for this weight percent (< %80) of nitric acid, for FHC evaluation purposes.

Table 3.3-12. Laboratory Area Inventory

Chemical	Total Annual Usage (Reasonably Bounding Inventory)				NFPA Health Hazard Rating	TQ from 29 CFR 1910 (lbs)	TQ from 40 CFR 68 (lbs)	TPQ from 40 CFR 355 (lbs)	Exceed TQ or TPQ?	Special Hazard Concerns	Screened (colocated worker and public)?	DOE-STD-1189 Justification for Screening
	Qty	Units	Qty	Units								
Alconox cleaning solution, 3.75 g/L	1,200	mL	0.32	gal	1	NL[1]	NL	NL	N		Y	A, C, D
Aluminum nitrate (2 M)	63	mL	0.017	gal	2	NL	NL	NL	N	NFPA 430: Class 1 Oxidizer	Y	C, D
Argon gas, ultra high purity	71,000	cu ft	7900	lbm	0	NL	NL	NL	N	Asphyxiant	Y	A, D, F
Ascorbic acid, 0.5 M	150	mL	0.04	gal	1	NL	NL	NL	N		Y	A, C, D
Ascorbic acid, 1.5 M	56	mL	0.015	gal	1	NL	NL	NL	N		Y	A, C, D
Barium chloride, 0.5 M	2,048	mL	0.541	gal	3[2]	NL	NL	NL	N		Y	A, C
Buffer solution[3], pH 10	1,800	mL	0.48	gal	1	NL	NL	NL	N		Y	
Buffer solution, pH 4	1,200	mL	0.32	gal	1	NL	NL	NL	N		Y	
Buffer solution, pH 7	1,800	mL	0.48	gal	1	NL	NL	NL	N		Y	A, C, D
Carbon-14 standard, sealed, in toluene	20	mL	0.005	gal	2	NL	NL	NL	N	RQ of 1000 lbs (based on toluene)	Y	C, D
Cerium nitrate hexahydrate	5	grams	0.01	lbm	2	NL	NL	NL	N		Y	C, D
Cerium solution, 0.5 mg/ml	13	mL	0.0034	gal	1	NL	NL	NL	N		Y	A, C, D
Collodion (ethyl ether ~70%, ethyl alcohol 25%), nitrocellulose 5%)	550	mL	0.15	gal	2	2500[4]	NL	NL	N	Highly flammable. Burning may produce toxic fumes. Reacts with air to form explosive peroxides. Dried material is shock sensitive.	N	Although the small amount and NFPA rating would allow screening, Collodion is further evaluated for its explosion/fire potential
Ethanol, 95%	491	mL	0.13	gal	2	NL	NL	NL	N	NFPA fire hazard 3	Y	C, D
Ferrous sulfamate, 2 M	56	mL	0.015	gal	3	NL	NL	NL	N	NFPA health hazard 3	Y	C
Ferrous sulfate, 1.5 M	71	mL	0.019	gal	3	NL	NL	NL	N	NFPA health hazard 3 and RQ of 1000 lbs	Y	C

Table 3.3-12. Laboratory Area Inventory(continued)

Chemical	Total Annual Usage (Reasonably Bounding Inventory)				NFPA Health Hazard Rating	TQ from 29 CFR 1910 (lbs)	TQ from 40 CFR 68 (lbs)	TPQ from 40 CFR 355 (lbs)	Exceed TQ or TPQ?	Special Hazard Concerns	Screened (colocated worker and public)?	DOE-STD-1189 Justification for Screening
	Qty	Units	Qty	Units								
Flon S-316 (tetrachlorohexafluorobutane)	4,500	mL	1.2	gal	1	NL	NL	NL	N		Y	A, C, D
Hydrochloric acid (0.1 M) – hydrofluoric acid (0.05 M)	2,520	mL	0.666	gal	3	NL	NL	NL	N	NFPA health hazard 3	Y	C
Hydrochloric acid, 0.04 M standardized	20,480	mL	5.41	gal	3	NL	NL	NL	N	NFPA health hazard 3	Y	C
Hydrochloric acid, 8M	1,568	mL	0.4142	gal	3	NL	15,000[5]	NL	N	NFPA health hazard 3 and RQ of 5000 lbs	Y	Small amount, no TQ/TPQ for concentration range
Hydrochloric acid, 9 M	1,260	mL	0.333	gal	3	NL	15,000[6]	NL	N	NFPA health hazard 3 and RQ of 5000 lbs	Y	Small amount, no TQ/TPQ for concentration range
Hydrofluoric acid, 48%	315	mL	0.0832	gal	4	NL	1000[6]	NL	N	NFPA health hazard 4 and RQ of 100 lbs	Y	Small amount, no TQ/TPQ for concentration range
Hydrogen peroxide, 30 to 50 wt%	63	mL	0.017	gal	2	7500[8]	NL	1000[7]	N		Y	Small amount, no TQ/TPQ for concentration range
Ionic Strength Adjuster, pHisa, Orion	100	mL	0.03	gal	3							A, C
Isopropyl alcohol	100	mL	0.03	gal	2	NL	NL	NL	N	NFPA fire hazard 3	Y	B, C, D
Laser dye solution, stillbene-429, in methanol (0.956 mg/mL)	200	mL	0.05	gal	1	NL	NL	NL	N	NFPA fire hazard 3 and RQ of 5000 lbs (based on methanol)	Y	A, C
Liquid nitrogen (rate based on 1 HPGe detectors)	156	cu ft	12.2	lbm	3	NL	NL	NL	N	Cryogenic, asphyxiant, NFPA health hazard 3	Y	F
Liquid Scintillation Cocktail (Ultima Gold, organic, non-RCRA)	500	mL	0.13	gal	1	NL	NL	NL	N		Y	A, C, D

Table 3.3-12. Laboratory Area Inventory(continued)

Chemical	Total Annual Usage (Reasonably Bounding Inventory)				NFPA Health Hazard Rating	TQ from 29 CFR 1910 (lbs)	TQ from 40 CFR 68 (lbs)	TPQ from 40 CFR 355 (lbs)	Exceed TQ or TPQ?	Special Hazard Concerns	Screened (colocated worker and public)?	DOE-STD-1189 Justification for Screening
	Qty	Units	Qty	Units								
Low Ionic Strength Buffer pH 4.10, Orion	3,000	mL	0.79	gal	1	NL	NL	NL	N		Y	A, C, D
Low Ionic Strength Buffer pH 6.97, Orion	3,000	mL	0.79	gal	1	NL	NL	NL	N		Y	A, C, D
Low Ionic Strength Buffer pH 9.15, Orion	3,000	mL	0.79	gal	1	NL	NL	NL	N		Y	A, C, D
Methanol (95%)-ethanol (5%)	464	mL	0.12	gal	1	NL	NL	NL	N	NFPA fire hazard 3 and RQ of 5000 lbs	Y	A, C
Nitric (8 M)-hydrofluoric (0.025 M) -hydrochloric (0.0005M)	1,890	mL	0.50	gal	4	500[8]	15,000[9]	1000[11]	N	NFPA health hazard 4 and RQ of 100 lbs (based on HF)	Y	C (HF and HCL quantities are insignificant and HNO_3 is covered in process inventory)
Nitric acid (2 M) - oxalic acid (0.05 M)	2,250	mL	0.594	gal	3	NL	NL	1000[11]	N	NFPA health hazard 3 and RQ of 1000 lbs (based on HNO_3)	Y	C (oxalic quantities are insignificant and HNO_3 is covered in process inventory)
Nitric acid (2 M) - ascorbic acid (0.05 M)	1,500	mL	0.40	gal	3	NL	NL	1000[11]	N	NFPA health hazard 3 and RQ of 1000 lbs (based on HNO_3)	Y	C (ascorbic quantities are insignificant and HNO_3 is covered in process inventory)
Nitric Acid (0.02M)-hydrofluoric acid (0.02M)	3,220	mL	0.851	gal	4	NL	NL	1000[11]	N	NFPA health hazard 4 and RQ of 100 lbs (based on HF)	Y	C (HF quantities are insignificant and HNO_3 is covered in process inventory)
Nitric Acid (12 M)-hydrofluoric acid (0.05M)	630	mL	0.17	gal	3	NL[8]	NL[9]	1000[11]	N	NFPA health hazard 4 and RQ of 100 lbs (based on HF)	Y	C (HF quantities are insignificant and HNO_3 is covered in process inventory)
Nitric acid (2.5M)-aluminum nitrate (0.5M)	2,688	mL	0.71	gal	3	NL	NL	1000[11]	N	NFPA health hazard 3 and RQ of 1000 lbs (based on HNO_3)	Y	C (aluminum nitrate quantities are insignificant and HNO_3 is covered in process inventory)

Table 3.3-12. Laboratory Area Inventory(continued)

Chemical	Total Annual Usage (Reasonably Bounding Inventory)				NFPA Health Hazard Rating	TQ from 29 CFR 1910 (lbs)	TQ from 40 CFR 68 (lbs)	TPQ from 40 CFR 355 (lbs)	Exceed TQ or TPQ?	Special Hazard Concerns	Screened (colocated worker and public)?	DOE-STD-1189 Justification for Screening
	Qty	Units	Qty	Units								
Nitric Acid (3 M) - ferrous sulfamate (0.01 M)	1,680	mL	0.444	gal	3	NL	NL	1000[11]	N	NFPA health hazard 3 and RQ of 1000 lbs (based on HNO_3)	Y	C (ferrous sulfamate quantities are insignificant and HNO_3 is covered in process inventory)
Nitric Acid (8 M)-hydrofluoric acid (0.025 M)	1,890	mL	0.50	gal	3	500[8]	15,000[9]	1000[11]	N	NFPA health hazard 4 and RQ of 100 lbs (based on HF)	Y	C (HF quantities are insignificant and HNO_3 is covered in process inventory)
Nitric acid, 0.5 M	252	mL	0.0666	gal	3	NL	NL	1000[11]	N	NFPA health hazard 3 and RQ of 1000 lbs	Y	HNO_3 is covered in process inventory
Nitric acid, 1%	8,520	mL	2.25	gal	3	NL	NL	1000[11]	N	NFPA health hazard 3 and RQ of 1000 lbs	Y	HNO_3 is covered in process inventory
Nitric Acid, 1M	2,702	mL	0.714	gal	3	NL	NL	1000[11]	N	NFPA health hazard 3 and RQ of 1000 lbs	Y	HNO_3 is covered in process inventory
Nitric acid, 2 M	750	mL	0.20	gal	3	NL	NL	1000[11]	N	NFPA health hazard 3 and RQ of 1000 lbs	Y	HNO_3 is covered in process inventory
Nitric acid, 3 M	17,786	mL	4.70	gal	3	NL	NL	1000[11]	N	NFPA health hazard 3 and RQ of 1000 lbs	Y	HNO_3 is covered in process inventory
Nitric acid, concentrated	189	mL	0.0499	gal	3	500[8]	15,000[9]	1000	N	NFPA health hazard 3 and RQ of 1000 lbs	Y	HNO_3 is covered in process inventory
Phosphoric acid, 10%	23,490	mL	6.21	gal	2[10]	NL	NL	NL	N	RQ of 5000 lbs	Y	C, D
Potassium chloride, 3M	4,800	mL	1.3	gal	1	NL	NL	NL	N		Y	A, C, D
Potassium oxalate, 1 M	2,048	mL	0.541	gal	4	NL	NL	NL	N	NFPA health hazard 4	Y	C, E
Propane gas (to flame plates)	350	cu ft	43	lbm	1	NL	10,000	NL	N	Asphyxiant, NFPA fire hazard 4	Y	F
Sodium hydroxide, 0.04 M	5,120	mL	1.35	gal	3	NL	NL	NL	N	NFPA health hazard 3 and RQ of 5000 lbs	Y	C, E
Sodium hydroxide, 0.1N	852	mL	0.225	gal	3	NL	NL	NL	N	NFPA health hazard 3 and RQ of 5000 lbs	Y	C, E

Table 3.3-12. Laboratory Area Inventory(continued)

Chemical	Total Annual Usage (Reasonably Bounding Inventory)				NFPA Health Hazard Rating	TQ from 29 CFR 1910 (lbs)	TQ from 40 CFR 68 (lbs)	TPQ from 40 CFR 355 (lbs)	Exceed TQ or TPQ?	Special Hazard Concerns	Screened (colocated worker and public)?	DOE-STD-1189 Justification for Screening
	Qty	Units	Qty	Units								
Sodium nitrite, 3M	84	mL	0.022	gal	2	NL	NL	NL	N	RQ of 100 lbs	Y	C, D
Standard stock solutions, ICP (in dilute nitric or hydrochloric acid)	3,834	mL	1.013	gal	3	NL	NL	1000	N	NFPA health hazard 3 and RQ of 1000 lbs (based on nitric acid).	Y	C
TEVA resin	120	grams	0.26	lbm	2	NL	NL	NL	N		Y	C, D
Titanium chloride (0.01M)-nitric(0.02M)-hydrofluoric (0.01M)	945	mL	0.25	gal	3	NL	2500	1000	N	NFPA health hazard 3 and RQ of 1000 lbs (based on titanium chloride).	Y	C
Titanium chloride in HCL, 20 wt%	126	mL	0.033	gal	3	NL	2500	1000	N	NFPA health hazard 3 and RQ of 1000 lbs (based on titanium chloride).	Y	C
Tributyl phosphate	15	mL	0.004	gal	2	NL	NL	NL	N		Y	C, D
Tritium standards, sealed, in toluene	20	mL	0.005	gal	2	NL	NL	NL	N	RQ of 1000 lbs (based on toluene)	Y	C, D
Tritium standards, unsealed	100	mL	0.026	gal	2	NL	NL	NL	N		Y	C
TRU resin	110	grams	0.24	lbm	2	NL	NL	NL	N		Y	C
Tuning solution in 1% nitric acid	2,556	mL	0.675	gal	3	NL	NL	1000	N	NFPA health hazard 3 and RQ of 1000 lbs (based on HNO_3)	Y	HNO_3 is covered in process inventory
UTEVA resin	150	grams	0.33	lbm	2	NL	NL	NL	N		Y	C, D
Water, deionized, ASTM Type I	287,438	mL	75.9	gal	0	NL	NL	NL	N		Y	B, D

Table 3.3-12. Laboratory Area Inventory(continued)

Footnotes

[1] NL = Not Listed
[2] Noted sources indicating a heath hazard rating of 1, 2 and 3 for barium chloride, while the official NFPA listing does include this compound. No RQ is listed.
[3] Buffer solutions are typically a mixture of a common weak acid (or base) and its salt in water, and is not toxic.
[4] Noted TQ is for nitrocelloluse with a concentration greater than 12.6% nitrogen and is not very representative of Collodion.
[5] TQ is for concentrated hydrochloric acid solutions of 37 wt% (12M) and stronger, and would not strictly apply to these solutions. Based on potential and toxicity of hydrogen chloride releases.
[6] TQ is for hydrogen fluoride/hydrofluoric acid at a concentration of 50 wt% or greater, and would not strictly apply to this solution.
[7] TQ is for hydrogen peroxide at a concentration of 52 wt% or greater, and would not strictly apply to this solution.
[8] TQ listed in 29 CFR 1910 is for nitric acid at a concentration of 94.5 wt% (~22.2M) or greater, and would not apply to this solution.
[9] TQ listed in 40 CFR 68 is for nitric acid at a concentration of 80 wt% (18.3M) or greater, and would not apply to this solution.
[10] Some MSDSs list the NFPA hazard rating as 3, but these refer to a much more concentrated solution than the 10% used in the WSB.
[11] The TQs are only valid for at least %80 to %94 weight percent nitric acid. The TPQ for nitric acid has no indicated weight percent limitations, and is the same as that listed as the RQ (1000 lbs). Therefore the TPQ is considered "not applicable" for this weight percent (< %80) of nitric acid, for FHC evaluation purposes.

DOE-STD-1189 Screening Criteria:

A - Chemicals with no known or suspected toxic properties.

B - Materials used in the same form, quantity, and concentration as a product packaged for distribution and use by the general public.

C - Chemicals in a quantity that can be “easily and safely manipulated by one person.” Quantities of hazardous chemical materials considered to be easily and safely manipulated by one person can be locally determined in accordance with the provisions of 29 CFR 1910.1450(b).

D - Materials that have a health hazard rating of 0, 1, or 2, based on NFPA-704.

E - Solid or liquid materials that, because of their physical form or other factors (e.g., plausible dispersal mechanisms), do not present an airborne exposure hazard.

F - Chemicals that can be defined as a SIH for which national consensus codes and standards provide for safe design and operation. The consensus code or standard needs to be identified and must be applicable to the use of the chemical in the facility that is to be screened from further evaluation.

Table 3.3-13. Estimated Site Boundary and Co-located Worker Chemical Consequences

(See Assumptions)

Chemical	MAR (lbs)	Form of Material	DR	ARF*RF	LPF	Source Term	
						lbs	mg
HNO_3 (as 13.6 M or 62 wt% Nitric Acid)	28550 (3999 gal)	Semivolatile liquid	Calculated using ALOHA Version 5.3.1				
Americium	54	Nonvolatile solid in non-flammable liquid	1	1.00E-04	1	5.4E-03	2.4E+03
Plutonium	0.32	Nonvolatile solid in non-flammable liquid	1	1.00E-04	1	3.2E-05	1.5E+01
Neptunium	5.97	Nonvolatile solid in non-flammable liquid	1	1.00E-04	1	6.0E-04	2.7E+02
Gallium	112	Nonvolatile solid/liquid in non-flammable liquid	1	1.00E-04	1	1.1E-02	5.1E+03
Uranium	2330	Nonvolatile solid in non-flammable liquid	1	2.00E-03	1	4.7E+00	2.1E+06

	Release Duration (sec)	X/Q (sec/m^3)		Conc. (mg/m^3)		TEEL-0	PAC-1	PAC-2	PAC-3	Consequence	
		100m	SB	100m	SB	(mg/m^3)	(mg/m^3)	(mg/m^3)	(mg/m^3)	100m	SB
HNO_3 (as 13.6 M or 62 wt% Nitric Acid)	Calculated using ALOHA[9] Version 5.3.1			2.4E+01	<0.2	0.53	0.53	24	92	Low	Neg
Americium	900	3.5E-03	1.9E-06	9.5E-03	5.2E-06	N/A	N/A	N/A	N/A	Neg	Neg
Plutonium	900	3.5E-03	1.9E-06	5.6E-05	3.1E-08	N/A	N/A	N/A	N/A	Neg	Neg
Neptunium	900	3.5E-03	1.9E-06	1.1E-03	5.7E-07	N/A	N/A	N/A	N/A	Neg	Neg
Gallium	900	3.5E-03	1.9E-06	2.0E-02	1.1E-05	10	30	50	250	Neg	Neg
Uranium	900	3.5E-03	1.9E-06	8.2E+00	4.5E-03	0.05	0.6	2	10	Mod	Neg

3.3-13 Estimated Site Boundary and Co-located Worker Chemical Consequences (continued)

Assumptions/Notes for the Chemical Consequence Analysis:

1. The MAR for each component is based on the maximum amount of that component in any single waste stream.
   Nitric Acid - Annual inventory in the MFFF HAW Excess Acid Stream (3,989 gals) during PDCF feed.
   Americium - Annual inventory in the MFFF HAW Americium stream (2,999 gals) during PDCF feed.
   Plutonium - Annual inventory in the MFFF HAW Americium stream (2,999 gals) during PDCF feed.
   Neptunium - Annual inventory in the MFFF HAW Americium stream (2,999 gals) during PDCF feed.
   Gallium - Annual inventory in the MFFF HAW Americium stream (2,999 gals) during PDCF feed.
   Uranium - Annual inventory in the MFFF LAW Stripped Uranium stream (43,850 gals) during PDCF Feed multiplied by the ratio of the LAW process tank volume to the annual inventory of 43,850 gals.
   The LAW process tanks containing significant uranium include the following:

MFFF stripped uranium receipt tanks:	2 @ 4,000 gal each
LAW head tank:	5,500 gal
LAW evaporator bottoms:	1,000 gal
LAW bottoms collection tank:	600 gal
LAW cement head tank:	2 @ 30 gal
Total volume:	15160
Max. Facility Inventory:	6738 lb U x (15160 / 43850) = 2330 lb U

2. The modeled release scenario for estimating hazardous chemical consequences for the HAW is a spill and for the LAW is a fire. This is because the HAW processing area already has safety related controls identified to protect against releases resulting from the bounding fire due to the radiological hazards. The LAW process does not. Also, because significant fire and explosions are either highly mitigated or prevented in the HAW process, a spill scenario was indicated as the most likely chemical dispersion event. The release duration is 15 minutes for both spill and fire events.

3. For the radionuclides and nonvolatile solids, an ARF=2E-4 and RF=0.5 (DOE-HDBK-3010-94) was used to represent a bounding free-fall spill of aqueous solutions from a height of 3 meters. The additional exposure resulting from aerodynamic entrainment over the following 15 minutes would not contribute significantly to the consequence.

4. For the uranium (LAW stream) a bounding ARF=2E-3 and RF=1.0 (DOE-HDBK-3010-94) was used to represent a rapid boiling of a nonvolatile solid in an aqueous solution. Note that the 15-min peak concentration calculated assumes that this amount is boiled off within 15-minutes, which is very conservative.

5. The X/Q value at 100m was obtained from DOE-STD-1189-2008. The X/Q value at the site boundary (9.4 km) was obtained from the WSB PHA (WSRC-TR-2002-00213, Rev. 5).

6. For nitric acid, chemical expsosures are based on maximum airborne concentrations calculated using Aloha Version 5.3.1 with the following primary assumptions:
   a. entire annual inventory of acid in the HAW Excess Acid stream is spilled into a pool filling the entire HAW processing room (~688 sq-ft).
   b. acid concentration of 64 wt% $HNO_{3,\ \text{instead of 62\%}}$
   c. conservative meteorological conditions including a windspeed of 1m/s and temperature of 29C
   d. surface roughness of 3 cm.

7. The listed PAC values for each chemical are in the following units:
   Nitric Acid - AEGLs
   Uranium - TEELs
   Gallium – TEELs

3.3-13 Estimated Site Boundary and Co-located Worker Chemical Consequences (continued)

8. The nitric acid TEEL-0 and PAC values are in ppm instead of $mg/m^{3.}$

9. ALOHA Inputs

SITE DATA INFORMATION:
Location: AIKEN, SOUTH CAROLINA
Building Air Exchanges Per Hour: 0.37 (unsheltered single storied)
Time: June 30, 2008 2359 hours EDT (user specified)

CHEMICAL INFORMATION:
Chemical Name: NITRIC ACID 64% Molecular Weight: 63.01 g/mol
Normal Boiling Point: 147.4° C Ambient Boiling Point: 146.8° C
Vapor Pressure at Ambient Temperature: 0.0037 atm
Ambient Saturation Concentration: 3,720 ppm or 0.37%

ATMOSPHERIC INFORMATION: (MANUAL INPUT OF DATA)
Wind: 1 meters/sec from 180° true at 3 meters
No Inversion Height
Stability Class: F Air Temperature: 29° C
Relative Humidity: 50% Ground Roughness: 3.0 centimeters
Cloud Cover: 5 tenths

SOURCE STRENGTH INFORMATION:
Puddle Area: 688 square feet Puddle Volume: 3989 gallons
Soil Type: Concrete Ground Temperature: 29° C
Initial Puddle Temperature: Ground temperature
Release Duration: ALOHA limited the duration to 1 hour

3.7 FIGURES

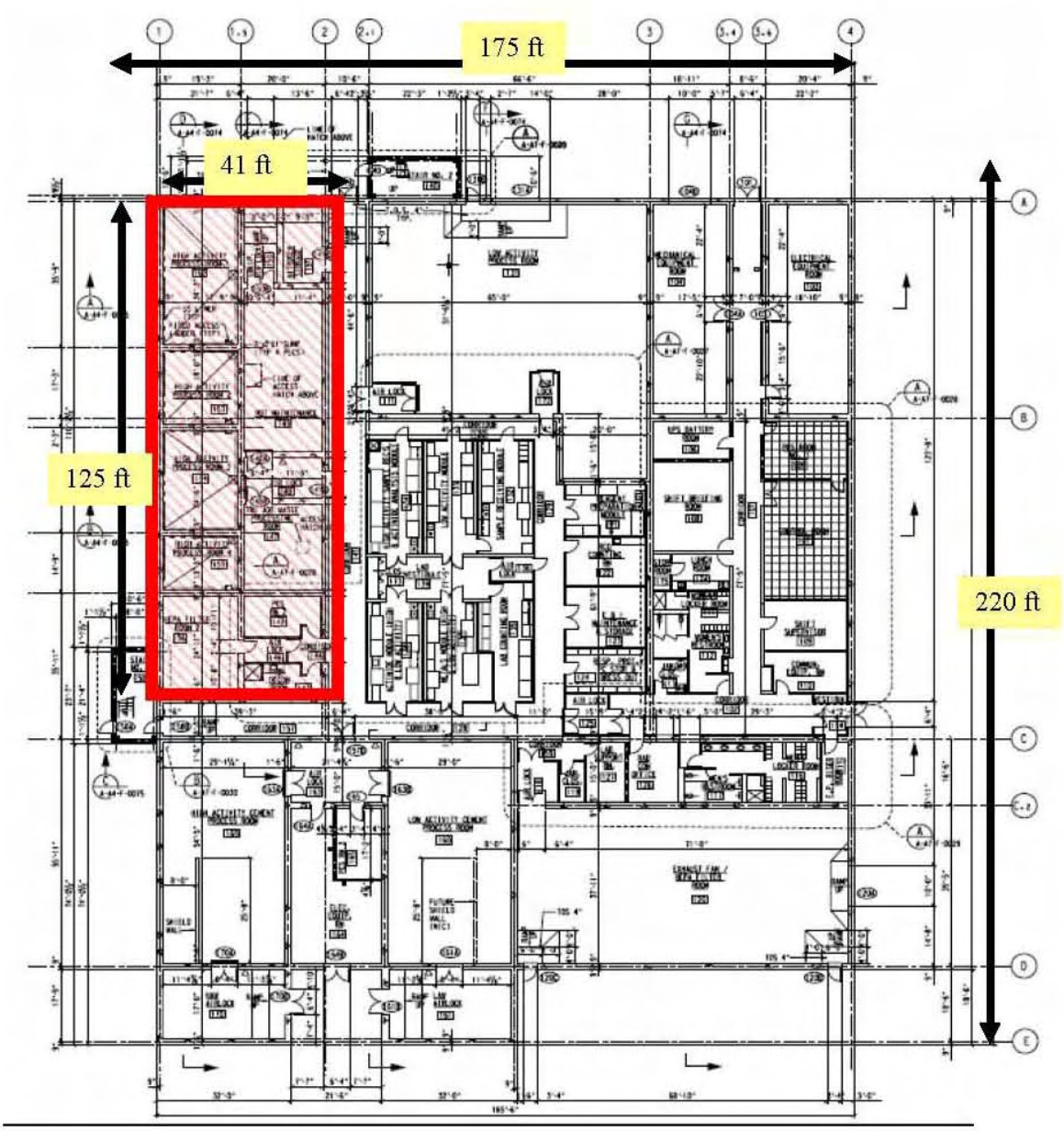

Figure 3.3-1 Aircraft Crash Reduced Footprint Area

APPENDIX A HAZARD EVALUATION TABLES

The WSB hazard evaluation tables were developed using Version 0.4.13.2981 of the software program, eCHAP (Ref. 35). The eCHAP software is a web-based program developed and managed by Washington Safety Management Solutions for use in implementing the WSRC CHAP. Tables are organized into three sections. The following is a description of those sections:

Section 1-General Details
The first section has a title field and another ten fields, which provide the details necessary to perform the hazard analysis. These fields are as follows:

- Title: Unique event identification based on the location of the event, the event category as listed in Subsection 3.3.1.3.1, and a sequential indicator
- Description: Event process upset condition and the resulting physical consequence
- Locations: Locations in which the event could occur
- MAR: Maximum amount of hazardous material that could be involved in the event
- Release mechanisms: Process through which the material is released (e.g., boiling liquid)
- Assumptions: Assumptions used during the event evaluation including the initial conditions
- Causes: Potential causes of the event
- Unmitigated system effects: Effects that the unmitigated event will have on the facility SSCs. Because the WSB CHAP team did not include these evaluations, the hazard evaluation tables generated with eCHAP indicate "none" for unmitigated system effects. This should be interpreted as "evaluation not included"
- Method of Detection: A list of methods by which the event may be detected
- Unmitigated Frequency: Unmitigated frequency level (as defined in Table 3.3-2)
- Mitigated Frequency: Mitigated frequency level (as defined in Table 3.3-2)

Section 2-Consequence and Risk Rank
The second section is divided into three groups of fields as follows:

- Unmitigated and mitigated consequence levels (as defined in Table 3.3-3): Consequence levels are given for all receptors that are identified as applicable and for each applicable hazard type (radiological, chemical, or physical). Worker Group (WG) 1 and WG2 are considered the FW. WG3 is considered the CW, and the MOI.
- Preventive Features: Includes two control groups. The first is preventive engineered controls. The second is preventive ACs. Each entry includes the attribute of the control and an indication of the control functional classification. In addition, a control can be identified as a facility control when appropriate and as an initial condition when appropriate.
- Mitigative Features: Includes two control groups. The first is mitigative engineered controls. The second is mitigative ACs. Each entry includes the attribute of the control and an indication of the control functional classification. In addition, a control can be identified as a facility control when appropriate and as an initial condition when appropriate.

Section 3-Credited SSCs and ACs

The credited SSCs and ACs fields list the credited preventive features and the credited mitigative features separately. For each of these controls, the following information is given:

- Class: Indication of the control functional classification
- Control: Description of the control
- Attribute: Credited attribute of the control
- Affected Receptors: For mitigative featutres, an indication is given as to which of the consequences would be mitigated by each control. Consequences are identified as to the nature of the consequence (i.e., radiological, chemical, or physical) and as to the receptor that would be affected
- Safety function: Credited safety function

In addition, Section 3 has fields which allow for notes and references.

Cementation Process Events

Hazard Evaluation Table - Event CEM-1-001

Description:
Fire occurs in cementation area causing a release of radioactive material.

Locations:
- HAW cementation area
- LAW cementation area

MAR:
- 420 grams Am-241 (HAW cementation process area inventory)

Release Mechanisms:
- Boiling liquid release.

Assumptions:
- Limit MAR to levels that will not challenge evaluation criteria of 100 rem to colocated worker.

Causes:
- Ignition source (e.g., electrical, oxidizers, thermal, friction, operator error) AND combustibles (e.g., hydraulic fluid, cabling, plastics, job control waste).

Unmitigated System Effects:
None

Methods of Detection:
- Fire detection and control room alarm.
- Operator observation

Unmitigated Frequency: A

Mitigated Frequency: A

Consequence / Risk Rank

Receptor	Rad				Chem				Phy			
	Unmit.		PHR Mit.		Unmit.		PHR Mit.		Unmit.		PHR Mit.	
WG1	H	A1	M	B1	N	C	N	C	L	B	N	C
WG2	H	A1	M	B1	N	C	N	C	L	B	N	C
WG3	M	B1	L	B	N	C	N	C				
MOI	L	B	N	C	N	C	N	C				

Preventive Features:

Engineered	None
Admin	• (Non-SC/SS) Fire Protection Program (Combustible controls) • (Non-SC/SS) Operator training and procedures (Procedures for use of equipment that may be source of fire)

Mitigative Features:

Engineered	• (Non-SC/SS) Building ventilation system w/HEPA (Containment) • (SS) Fire suppression system (HAW cementation area) • (SS) HAW cementation area design and construction (Fire barrier around cementation area (qualified to appropriate fire rating and seismic performance criteria))
Admin	• (SS) Event Response Program (Worker performs appropriate response.) • (SS) Fire Protection Program (Adequate fire water supply) • (SS) Inventory Control Program (Limit on radiological inventory in liquid material inside the HAW cementation area)

Credited SSCs and ACs

	Class	Control	Attribute	Affected Receptors
Preventers	None			
Mitigators	SS	Event Response Program	Worker performs appropriate response.	• Rad: WG1, WG2, WG3; • Phy: WG1, WG2;
		Safety Function:	Reduces worker exposure and contamination potential	
	SS	Fire Protection Program	Adequate fire water supply	• Rad: WG1, WG2, WG3;
		Safety Function:	Limits the consequences to all workers from the release of radioactive material during a fire by ensuring that an adequate water supply is available.	
	SS	Fire suppression system	HAW cementation area	• Rad: WG1, WG2, WG3, MOI; • Phy: WG1, WG2;
		Safety Function:	Reduces the amount of radioactive material released by reducing the intensity and duration of fires inside the HAW cementation area.	
	SS	HAW cementation area design and construction	Fire barrier around cementation area (qualified to appropriate fire rating and seismic performance criteria)	• Rad: WG1, WG2, WG3, MOI; • Phy: WG1, WG2;
		Safety Function:	Limits the consequences of a fire starting outside the HAW cementation area by reducing the impact on the MAR.	
	SS	Inventory Control Program	Limit on radiological inventory in liquid material inside the HAW cementation area	• Rad: WG1, WG2, WG3, MOI;
		Safety Function:	Limits the MAR to quantities that were assumed during the hazard and accident analyses.	
Notes:	None			
References:	None			

Hazard Evaluation Table - Event CEM-1-002

Description:
Fire occurs in HAW cementation enclosure causing a release of radioactive material.

Locations:
- HAW cementation area

MAR:
- One HAW waste drum inventory (45 grams of Am-241)

Release Mechanisms:
- Boiling liquid release.

Assumptions:
None

Causes:
- Ignition source (e.g., electrical, oxidizers, thermal, friction, operator error) AND combustibles (e.g., hydraulic fluid, cabling, plastics, job control waste).

Unmitigated System Effects:
None

Methods of Detection:
- Fire detection and control room alarm.
- Operator observation

Unmitigated Frequency: A

Mitigated Frequency: A

Consequence / Risk Rank

Receptor	Rad				Chem				Phy			
	Unmit.		PHR Mit.		Unmit.		PHR Mit.		Unmit.		PHR Mit.	
WG1	H	A1	M	B1	N	C	N	C	L	B	N	C
WG2	H	A1	M	B1	N	C	N	C	L	B	N	C
WG3	L	B	N	C	N	C	N	C				
MOI	N	C	N	C	N	C	N	C				

Preventive Features:

Engineered	None
Admin	• (Non-SC/SS) Fire Protection Program (Combustible controls) • (Non-SC/SS) Operator training and procedures (Procedures for use of equipment that may be source of fire)

Mitigative Features:

Engineered	• (Non-SC/SS) Building ventilation system w/HEPA (Containment) • (Non-SC/SS) Fire suppression system (HAW cementation area)
Admin	• (SS) Event Response Program (Worker performs appropriate response.) • (SS) Inventory Control Program (Limit on radiological inventory in liquid material inside the HAW cementation area)

Credited SSCs and ACs

	Class	Control	Attribute	Affected Receptors
Preventers	None			
Mitigators	SS	Event Response Program	Worker performs appropriate response.	• Rad: WG1, WG2, WG3; • Chem: WG1, WG2; • Phy: WG1, WG2;
		Safety Function:	Reduces worker exposure and contamination potential	
	SS	Inventory Control Program	Limit on radiological inventory in liquid material inside the HAW cementation area	• Rad: WG1, WG2, WG3, MOI;
		Safety Function:	Limits the MAR to quantities that were assumed during the hazard and accident analyses.	
Notes:	• If fire breaches enclosure and involves room, see Event CEM-1-001.			
References:	None			

Hazard Evaluation Table - Event CEM-2-001

Description:
Ignition of hydrogen or volatile organic compounds in a 55-gallon waste drum causes a deflagration that results in the release of radioactive material.

Locations:
- HAW cementation area

MAR:
- Container of HAW cemented waste (45 grams of Am-241)

Release Mechanisms:
- Aerosolization due to energetic deflagration.

Assumptions:
None

Causes:
- Ignition Source

-High temperature (e.g., heat of hydration,
-Operator error,
-Miscellaneous ignitions (impacts, static electricity...)

AND

Flammable Vapor Source
-Off gas during curing
-Radiolysis
-Plugged or insufficient vents

Unmitigated System Effects:
None

Methods of Detection:
- Operator observation
- Radiation monitoring

Unmitigated Frequency: A

Mitigated Frequency: A

Consequence / Risk Rank

Receptor	Rad				Chem				Phy			
	Unmit.		PHR Mit.		Unmit.		PHR Mit.		Unmit.		PHR Mit.	
WG1	M	B1	N	C	N	C	N	C	H	A1	N	C
WG2	M	B1	N	C	N	C	N	C	H	A1	H	A1
WG3	L	B	N	C	N	C	N	C				
MOI	N	C	N	C	N	C	N	C				

Preventive Features:

Engineered	None
Admin	• (SS) TRU Waste Acceptance Criteria (Waste drums properly vented and packaged in accordance with Waste Acceptance Criteria)

Mitigative Features:

Engineered	None
Admin	• (Non-SC/SS) [FC] Drums are filled in a glovebox and remain there until "gelled". (Confinement) • (Non-SC/SS) [FC] Event Response Program (Worker performs appropriate response.) • (Non-SC/SS) [FC] Radiological Protection Program (Monitor of radiological conditions and application of appropriate response)

Credited SSCs and ACs

	Class	Control	Attribute	Affected Receptors
Preventers	SS	TRU Waste Acceptance Criteria	Waste drums properly vented and packaged in accordance with Waste Acceptance Criteria	
		Safety Function:	Prevents buildup of flammable concentrations of hydrogen and VOCs	
Mitigators	None			
Notes:	• (High physical consequences are due to lid ejection)			
References:	None			

Hazard Evaluation Table - Event CEM-2-002

Description:
H2 generation in waste container from HAW (may be in liquid form) leads to deflagration while still in the cementation enclosure.

Locations:	**MAR:**
• HAW cementation area	• Container of HAW cemented waste (45 grams of Am-241)

Release Mechanisms:
• Aerosolization due to energetic deflagration.

Assumptions:
• Waste streams transferred to WSB will meet waste acceptance criteria established to protect the facility inventory limits, assumed hydrogen generation rates, radiation dose rates, chemical content, and criticality evaluation bases.

Causes:
• Radiolysis AND ignition sources

Unmitigated System Effects:	**Methods of Detection:**
None	• Operator observation • Radiation monitoring
Unmitigated Frequency: U	**Mitigated Frequency:** Prevented

Consequence / Risk Rank

Receptor	Rad				Chem				Phy			
	Unmit.		PHR Mit.		Unmit.		PHR Mit.		Unmit.		PHR Mit.	
WG1	M	B1			N	C			H	A1		
WG2	M	B1			N	C			H	A1		
WG3	L	B			N	C						
MOI	N	C			N	C						

Preventive Features:	
Engineered	• (SS) Diesel Generator (Secondary Electric Power Supply) • (SS) HAW PVVS (Dilution air flow)
Admin	None
Mitigative Features:	
Engineered	None
Admin	• (Non-SC/SS) [FC] Event Response Program (Worker performs appropriate response.) • (Non-SC/SS) [FC] Radiological Protection Program (Monitor of radiological conditions and application of appropriate response)

Credited SSCs and ACs

	Class	Control	Attribute	Affected Receptors
Preventers	SS	Diesel Generator	Secondary Electric Power Supply	
		Safety Function:	Provide electric power to active Safety Significant controls when sufficient power is not available from the primary electric power supply.	
	SS	HAW PVVS	Dilution air flow	
		Safety Function:	Maintain flammable gas concentration below 25 % of the LFL.	
Mitigators	None			
Notes:	• This event is unlikely to occur because the drum is not expected to remain in the enclosure for a sufficient amount of time to generate flammable concentrations of hydrogen.			
References:	None			

Hazard Evaluation Table - Event CEM-3-001

Description:
Spill of HAW Liquid in HAW Cementation Area from Transfer Line

Locations:
- HAW cementation area

MAR:
- 45 grams of Am-241 (one HAW cementation head tank volume)

Release Mechanisms:
- Spill

Assumptions:
None

Causes:
- Corrosion / erosion
- Maintenance activity
- Operator error
- Pipe failure

Unmitigated System Effects:
None

Methods of Detection:
- Operator observation
- Radiation monitoring

Unmitigated Frequency: A

Mitigated Frequency: U

Consequence / Risk Rank

Receptor	Rad				Chem				Phy			
	Unmit.		PHR Mit.		Unmit.		PHR Mit.		Unmit.		PHR Mit.	
WG1	H	A1	L	B	N	C	N	C				
WG2	H	A1	L	B	N	C	N	C				
WG3	L	B	L	B	N	C	N	C				
MOI	N	C	N	C	N	C	N	C				

Preventive Features:

Engineered	• (SS) HAW cementation transfer line (Core pipe)
Admin	• (Non-SC/SS) Configuration Management Program (Verification that alterations comply with WSB safety basis) • (SS) Structural Integrity Program (HAW cementation transfer line jacket inspections and requirements)

Mitigative Features:

Engineered	• (SS) HAW cementation enclosure (Containment of radioactive material spills) • (SS) HAW cementation enclosure ventilation system (Confinement) • (SS) HAW cementation transfer line (Jacket)
Admin	• (SS) Event Response Program (Worker performs appropriate response.) • (SS) Radiological Protection Program (Monitor of radiological conditions and application of appropriate response) • (Non-SC/SS) Work Control Program (Control of maintenance activities)

Credited SSCs and ACs

	Class	Control	Attribute	Affected Receptors
Preventers	SS	HAW cementation transfer line	Core pipe	
		Safety Function:	Contains HAW material.	
	SS	Structural Integrity Program	HAW cementation transfer line jacket inspections and requirements	• Rad: WG1, WG2, WG3, MOI; • Phy: WG1;
		Safety Function:	Ensures that the integrity of the HAW cementation transfer line jacket is maintained	
Mitigators	SS	Event Response Program	Worker performs appropriate response.	• Rad: WG1, WG2; • Phy: WG1;
		Safety Function:	Reduces worker exposure and contamination potential	
	SS	HAW cementation enclosure	Containment of radioactive material spills	• Rad: WG1, WG2; • Phy: WG1;
		Safety Function:	Limits consequences to the facility working by containing spills inside the HAW cementation enclosure.	
	SS	HAW cementation enclosure ventilation system	Confinement	• Rad: WG1, WG2;
		Safety Function:	Provides filtration of airborne hazardous material	
	SS	HAW cementation transfer line	Jacket	• Rad: WG1, WG2;
		Safety Function:	Contains leaks from core pipe and directs them to a collection point.	
	SS	Radiological Protection Program	Monitor of radiological conditions and application of appropriate response	• Rad: WG1, WG2;
		Safety Function:	Prevents or reduces personnel contamination and radiation exposure	
Notes:	None			
References:	None			

Hazard Evaluation Table - Event CEM-3-002

Description:
Spill of HAW Liquid in HAW Cementation Enclosure

Locations:	**MAR:**
• HAW cementation area	• 45 grams of Am-241 (one HAW cementation head tank volume)

Release Mechanisms:
- Spill

Assumptions:
None

Causes:
- Failure of waste container
- Inadvertent transfer or overflow
- Misconnected fill line

Unmitigated System Effects:	**Methods of Detection:**
None	• Operator observation • Radiation monitoring
Unmitigated Frequency: A	**Mitigated Frequency:** A

Consequence / Risk Rank

Receptor	Rad				Chem				Phy			
	Unmit.		PHR Mit.		Unmit.		PHR Mit.		Unmit.		PHR Mit.	
WG1	H	A1	M	B1	N	C	N	C	N	C	N	C
WG2	H	A1	M	B1	N	C	N	C	N	C	N	C
WG3	L	B	L	B	N	C	N	C				
MOI	N	C	N	C	N	C	N	C				

Preventive Features:

Engineered	None
Admin	• (Non-SC/SS) [FC] Interlock Hardware and Software Controls (Detection of upset conditions (overfill potential or drum not in place) and interruption of transfer or prevention of transfer initiation.) • (Non-SC/SS) [FC] Operator Training & Procedures (Procedure for filling and mixing drums with HAW.)

Mitigative Features:

Engineered	• (SS) HAW cementation enclosure (Containment of radioactive material spills) • (SS) HAW cementation enclosure ventilation system (Confinement)
Admin	• (SS) Event Response Program (Worker performs appropriate response.) • (Non-SC/SS) [FC] Manual Pump Cut off Switch (Provides operator with mechanism to terminate waste transfer if a spill is detected) • (Non-SC/SS) [FC] Radiological Protection Program (Monitor of radiological conditions and application of appropriate response)

Credited SSCs and ACs

	Class	Control	Attribute	Affected Receptors
Preventers	None			
Mitigators	SS	Event Response Program	Worker performs appropriate response.	• Rad: WG1, WG2; • Phy: WG1;
		Safety Function:	Reduces worker exposure and contamination potential	
	SS	HAW cementation enclosure	Containment of radioactive material spills	• Rad: WG1, WG2; • Phy: WG1;
		Safety Function:	Limits consequences to the facility working by containing spills inside the HAW cementation enclosure.	
	SS	HAW cementation enclosure ventilation system	Confinement	• Rad: WG1, WG2;
		Safety Function:	Provides filtration of airborne hazardous material	
Notes:	None			
References:	None			

Hazard Evaluation Table - Event CEM-3-003

Description:
Spill of HAW Liquid and Cement Mixture in HAW Cementation Enclosure

Locations:
- HAW cementation area

MAR:
- One HAW waste drum inventory (45 grams of Am-241)

Release Mechanisms:
- Spill

Assumptions:
None

Causes:
- Overturned or damaged container due to: conveyer malfunction, failure of lift mechanism, or door failure to fully open while drum is in motion

Unmitigated System Effects:
None

Methods of Detection:
- Operator observation
- Radiation monitoring

Unmitigated Frequency: A

Mitigated Frequency: A

Consequence / Risk Rank

Receptor	Rad				Chem				Phy			
	Unmit.		PHR Mit.		Unmit.		PHR Mit.		Unmit.		PHR Mit.	
WG1	H	A1	M	B1	N	C	N	C	N	C	N	C
WG2	H	A1	M	B1	N	C	N	C	N	C	N	C
WG3	L	B	L	B	N	C	N	C				
MOI	N	C	N	C	N	C	N	C				

Preventive Features:

Engineered	None
Admin	• (Non-SC/SS) [FC] Operator Training & Procedures (Movement of Filled Drums in the HAW Process Room)

Mitigative Features:

Engineered	• (SS) HAW cementation enclosure (Containment of radioactive material spills) • (SS) HAW cementation enclosure ventilation system (Confinement)
Admin	• (SS) Event Response Program (Worker performs appropriate response.) • (Non-SC/SS) [FC] Radiological Protection Program (Monitor of radiological conditions and application of appropriate response)

Credited SSCs and ACs

	Class	Control	Attribute	Affected Receptors
Preventers	None			
Mitigators	SS	Event Response Program	Worker performs appropriate response.	• Rad: WG1, WG2; • Phy: WG1;
		Safety Function:	Reduces worker exposure and contamination potential	
	SS	HAW cementation enclosure	Containment of radioactive material spills	• Rad: WG1, WG2; • Phy: WG1;
		Safety Function:	Limits consequences to the facility working by containing spills inside the HAW cementation enclosure.	
	SS	HAW cementation enclosure ventilation system	Confinement	• Rad: WG1, WG2;
		Safety Function:	Provides filtration of airborne hazardous material	
Notes:	None			
References:	None			

Hazard Evaluation Table - Event CEM-3-004

Description:
Spill of HAW Liquid and Cement Mixture in HAW Cementation Area outside of the enclosure

Locations:
- HAW cementation area

MAR:
- One HAW waste drum inventory (45 grams of Am-241)

Release Mechanisms:
- Spill

Assumptions:
None

Causes:
- Drum falls off conveyor
- Equipment impacts drum

Unmitigated System Effects:
None

Methods of Detection:
- Operator observation
- Radiation monitoring

Unmitigated Frequency: A

Mitigated Frequency: A

Consequence / Risk Rank

Receptor	Rad				Chem				Phy			
	Unmit.		PHR Mit.		Unmit.		PHR Mit.		Unmit.		PHR Mit.	
WG1	H	A1	M	B1	N	C	N	C	N	C	N	C
WG2	H	A1	M	B1	N	C	N	C	N	C	N	C
WG3	L	B	L	B	N	C	N	C				
MOI	N	C	N	C	N	C	N	C				

Preventive Features:

Engineered	• (Non-SC/SS) [FC] 7A Type A containers (Container integrity)
Admin	• (Non-SC/SS) Operator Training & Procedures (Movement of Filled Drums in the HAW Process Room)

Mitigative Features:

Engineered	• (Non-SC/SS) [FC] Building ventilation system w/HEPA (Containment)
Admin	• (SS) Event Response Program (Worker performs appropriate response.) • (Non-SC/SS) [FC] Radiological Protection Program (Monitor of radiological conditions and application of appropriate response)

Credited SSCs and ACs

	Class	Control	Attribute	Affected Receptors
Preventers	None			
Mitigators	SS	Event Response Program	Worker performs appropriate response.	• Rad: WG1, WG2; • Phy: WG1;
		Safety Function:	Reduces worker exposure and contamination potential	
Notes:	None			
References:	None			

Hazard Evaluation Table - Event CEM-3-005

Description:
Overhead crane impacts the HAW cementation enclosure causing a breach in the enclosure resulting in release of radioactive material.

Locations:	**MAR:**
• HAW cementation area	• One HAW waste drum inventory (45 grams of Am-241)

Release Mechanisms:
- Spill

Assumptions:
None

Causes:
- Crane or monorail load drop
- Equipment failure
- Operator error

Unmitigated System Effects:	**Methods of Detection:**
None	• Operator observation • Radiation monitoring
Unmitigated Frequency: A	**Mitigated Frequency:** A

Consequence / Risk Rank

Receptor	Rad				Chem				Phy			
	Unmit.		PHR Mit.		Unmit.		PHR Mit.		Unmit.		PHR Mit.	
WG1	H	A1	M	B1	N	C	N	C	N	C	N	C
WG2	H	A1	M	B1	N	C	N	C	N	C	N	C
WG3	L	B	L	B	N	C	N	C				
MOI	N	C	N	C	N	C	N	C				

Preventive Features:	
Engineered	None
Admin	• (Non-SC/SS) Operator Training & Procedures (Crane Operation)
Mitigative Features:	
Engineered	• (Non-SC/SS) Building ventilation system w/HEPA (Containment)
Admin	• (SS) Event Response Program (Worker performs appropriate response.) • (Non-SC/SS) Radiological Protection Program (Monitor of radiological conditions and application of appropriate response)

Credited SSCs and ACs

	Class	Control	Attribute	Affected Receptors
Preventers	None			
Mitigators	SS	Event Response Program	Worker performs appropriate response.	• Rad: WG1, WG2; • Phy: WG1;
		Safety Function:	Reduces worker exposure and contamination potential	
Notes:	None			
References:	None			

Facility Wide Events

Hazard Evaluation Table - Event FW-1-001

Description:
Fire propagates to include entire WSB facility

Locations:
- WSB

MAR:
- Entire HAW and LAW inventory

Release Mechanisms:
- Boiling liquid release.

Assumptions:
None

Causes:
- Combustible material AND ignition sources: maintenance; electrical; mechanical friction
- Wildland fire (embers in air intake)

Unmitigated System Effects:
None

Methods of Detection:
- Fire detection and control room alarm.

Unmitigated Frequency: U

Mitigated Frequency: U

Consequence / Risk Rank

Receptor	Rad				Chem				Phy			
	Unmit.		PHR Mit.		Unmit.		PHR Mit.		Unmit.		PHR Mit.	
WG1	H	A1	N	C	M	B1	N	C	H	A1	L	B
WG2	H	A1	N	C	M	B1	N	C	H	A1	L	B
WG3	H	A1	N	C	M	B1	N	C				
MOI	M	B1	N	C	N	C	N	C				

Preventive Features:

Engineered	None
Admin	• (Non-SC/SS) [FC] Fire Protection Program (Combustible Controls in Area around WSB, Control of Ignition Sources in Area around WSB)

Mitigative Features:

Engineered	• (SS) Fire suppression system (HAW cementation area) • (SS) Fire suppression system (HAW area) • (SS) HAW area design and construction (Fire barrier around and between the two PVVS trains (qualified to appropriate fire rating and seismic performance criteria)) • (SS) HAW area design and construction (Fire barrier around HAW area (qualified to appropriate fire rating and seismic performance criteria)) • (SS) HAW cementation area design and construction (Fire barrier around cementation area (qualified to appropriate fire rating and seismic performance criteria))
Admin	• (SS) Event Response Program (Worker performs appropriate response.) • (SS) Fire Protection Program (Combustible controls) • (SS) Fire Protection Program (Adequate fire water supply) • (Non-SC/SS) [FC] Fire Protection Program (Fire department response) • (Non-SC/SS) HAW PVVS (Confinement) • (SS) {IC} Inventory Control Program (Limit on material outside the HAW process room)

Credited SSCs and ACs

	Class	Control	Attribute	Affected Receptors
Preventers	None			
Mitigators	SS	Event Response Program	Worker performs appropriate response.	• Rad: WG1, WG2, WG3; • Chem: WG1, WG2, WG3; • Phy: WG1, WG2;
		Safety Function:	Reduces worker exposure and contamination potential	
	SS	Fire Protection Program	Combustible controls	• Rad: WG1, WG2, WG3, MOI; • Chem: WG1, WG2, WG3; • Phy: WG1, WG2;
		Safety Function:	Reduces the frequency of fires and the intensity of fires	
	SS	Fire Protection Program	Adequate fire water supply	• Rad: WG1, WG2, WG3; • Chem: WG1, WG2, WG3;
		Safety Function:	Limits the consequences to all workers from the release of radioactive material during a fire by ensuring that an adequate water supply is available.	
	SS	Fire suppression system	HAW area	• Rad: WG1, WG2, WG3, MOI; • Chem: WG1, WG2, WG3; • Phy: WG1, WG2;
		Safety Function:	Reduces the amount of radioactive material released by reducing the intensity and duration of fires inside the HAW area.	
	SS	Fire suppression system	HAW cementation area	• Rad: WG1, WG2, WG3, MOI; • Chem: WG1,

				WG2, WG3;
		Safety Function:	Reduces the amount of radioactive material released by reducing the intensity and duration of fires inside the HAW cementation area.	
	SS	HAW area design and construction	Fire barrier around HAW area (qualified to appropriate fire rating and seismic performance criteria)	• Rad: WG1, WG2, WG3, MOI; • Chem: WG1, WG2, WG3;
		Safety Function:	Limits the consequences of a fire starting outside the HAW process rooms by reducing the impact on the MAR.	
	SS	HAW area design and construction	Fire barrier around and between the two PVVS trains (qualified to appropriate fire rating and seismic performance criteria)	• Rad: WG1, WG2, WG3, MOI; • Chem: WG1, WG2, WG3;
		Safety Function:	Prevents fires from propagating into or between the duplicate PVVS rooms and SSCs.	
	SS	HAW cementation area design and construction	Fire barrier around cementation area (qualified to appropriate fire rating and seismic performance criteria)	• Rad: WG1, WG2, WG3, MOI; • Chem: WG1, WG2, WG3; • Phy: WG1, WG2;
		Safety Function:	Limits the consequences of a fire starting outside the HAW cementation area by reducing the impact on the MAR.	
	SS	Inventory Control Program	Limit on material outside the HAW process room	• Rad: WG1, WG2, WG3, MOI; • Chem: WG1, WG2, WG3;
		Safety Function:	Limits the MAR to quantities that were assumed during the hazard and accident analyses.	
Notes:	• Waste in the facility included in the HAW and LAW inventory. Other waste is in waste storage building.			
References:	None			

Hazard Evaluation Table - Event FW-6-001

Description:
Helicopter or small plane impacts facility, resulting in fire and radiological release

Locations:	**MAR:**
• WSB or TRU waste storage building	• Entire HAW and LAW inventory

Release Mechanisms:
• Boiling release due to fire.

Assumptions:
None

Causes:
• Aircraft crash

Unmitigated System Effects:	**Methods of Detection:**
None	• Operator observation
Unmitigated Frequency: EU	**Mitigated Frequency:** EU

Consequence / Risk Rank

Receptor	Rad				Chem				Phy			
	Unmit.		PHR Mit.		Unmit.		PHR Mit.		Unmit.		PHR Mit.	
WG1	H	A2	M	B1	M	B1	L	B	H	A2	H	A2
WG2	H	A2	M	B1	M	B1	L	B	H	A2	H	A2
WG3	H	A2	M	B1	M	B1	L	B				
MOI	M	B1	N	C	N	C	N	C				

Preventive Features:	
Engineered	None
Admin	None
Mitigative Features:	
Engineered	• (SS) Diesel Generator (Secondary Electric Power Supply) • (Non-SC/SS) [FC] Fire suppression system (Sprinklers) • (SS) HAW area design and construction (Fire barrier around HAW area (qualified to appropriate fire rating and seismic performance criteria)) • (SS) HAW area design and construction (Fire barrier around HAW area (qualified to appropriate fire rating and seismic performance criteria)) • (SS) HAW cementation area design and construction (Fire barrier around cementation area (qualified to appropriate fire rating and seismic performance criteria)) • (SS) HAW PVVS (External duct to stack)
Admin	• (SS) Event Response Program (Worker performs appropriate response.) • (Non-SC/SS) [FC] Fire Protection Program (Fire department response) • (SS) {IC} Inventory Control Program (Limit on Radionuclide Inventory outside the HAW Process Rooms) • (SS) Radiological Protection Program (Monitor of radiological conditions and application of appropriate response)

Credited SSCs and ACs

	Class	Control	Attribute	Affected Receptors
Preventers	None			
Mitigators	SS	Diesel Generator	Secondary Electric Power Supply	• Rad: WG1, WG2, WG3, MOI; • Chem: WG1, WG2, WG3;
		Safety Function:	Provide electric power to active Safety Significant controls when sufficient power is not available from the primary electric power supply.	
	SS	Event Response Program	Worker performs appropriate response.	• Rad: WG1, WG2, WG3; • Chem: WG1, WG2, WG3; • Phy: WG1;
		Safety Function:	Reduces worker exposure and contamination potential	
	SS	HAW area design and construction	Fire barrier around HAW area (qualified to appropriate fire rating and seismic performance criteria)	• Rad: WG1, WG2, WG3; • Chem: WG1, WG2, WG3; • Phy: WG1;
		Safety Function:	Limits the consequences of a fire starting outside the HAW process rooms by reducing the impact on the MAR and by protecting the PVVS.	
	SS	HAW area design and construction	Fire barrier around HAW area (qualified to appropriate fire rating and seismic performance criteria)	• Rad: MOI;
		Safety Function:	Limits the consequences of a fire starting outside the HAW process rooms by reducing the impact on the MAR and by protecting the PVVS.	
	SS	HAW cementation area design and construction	Fire barrier around cementation area (qualified to appropriate fire rating and seismic performance criteria)	• Rad: WG1, WG2, WG3, MOI; • Chem: WG1, WG2, WG3; • Phy: WG1, WG2;
		Safety Function:	Limits the consequences of a fire starting outside the HAW cementation area by reducing the impact on the MAR.	
	SS	HAW PVVS	External duct to stack	• Rad: WG1, WG2,

				WG3, MOI; • Chem: WG1, WG2, WG3;
		Safety Function:	HAW PVVS continues to provide dilution flow and negative pressure during external event	
	SS	Inventory Control Program	Limit on Radionuclide Inventory outside the HAW Process Rooms	• Rad: WG1, WG2, WG3, MOI; • Chem: WG1, WG2, WG3;
		Safety Function:	Limits the MAR to quantities that were assumed during the hazard and accident analyses.	
	SS	Radiological Protection Program	Monitor of radiological conditions and application of appropriate response	• Rad: WG1, WG2, WG3, MOI;
		Safety Function:	Prevents or reduces personnel contamination and radiation exposure	
Notes:	None			
References:	• Reference 32 ("WSB Aircraft Impact Frequencies (U)") indicates this event is "beyond extremely unlikely (frequency determined to be 8.4 E-7 per year).			

Hazard Evaluation Table - Event FW-6-003

Description:
External impact from adjacent construction / non-routine operations (PDCF, WSB maintenance, etc.), results in radiological release

Locations:	**MAR:**
• WSB	• Entire HAW and LAW inventory

Release Mechanisms:
- Spill

Assumptions:
- Failure of any structures external to WSB (e.g., the exhaust stack) will not adversely impact the results of the evaluations performed in the WSB CHA.

Causes:
- Construction operations around WSB (large equipment, etc.)

Unmitigated System Effects:	**Methods of Detection:**
None	• Operator observation
Unmitigated Frequency: EU	**Mitigated Frequency:** Prevented

Consequence / Risk Rank

Receptor	Rad				Chem				Phy			
	Unmit.		PHR Mit.		Unmit.		PHR Mit.		Unmit.		PHR Mit.	
WG1	H	A2			M	B1			H	A2		
WG2	H	A2			M	B1			H	A2		
WG3	H	A2			M	B1						
MOI	L	B			N	C						

Preventive Features:

Engineered	• (SS) HAW PVVS (External duct to stack)
Admin	• (SS) Hoisting and Rigging Program (Evaluation of Crane Use adjacent to WSB Facility) • (SS) Site Work Control Program (Control of Construction loads over and adjacent to WSB)

Mitigative Features:

Engineered	None
Admin	• (Non-SC/SS) [FC] Event Response Program (Worker performs appropriate response.) • (Non-SC/SS) [FC] {IC} Inventory Control Program (Limit on material outside the HAW process room) • (Non-SC/SS) [FC] Radiological Protection Program (Monitor of radiological conditions and application of appropriate response)

Credited SSCs and ACs

	Class	Control	Attribute	Affected Receptors
Preventers	SS	HAW PVVS	External duct to stack	
		Safety Function:	HAW PVVS continues to provide dilution flow and negative pressure during external event	
	SS	Hoisting and Rigging Program	Evaluation of Crane Use adjacent to WSB Facility	
		Safety Function:	Prevents external dropped overhead loads from lifting equipment	
	SS	Site Work Control Program	Control of Construction loads over and adjacent to WSB	
		Safety Function:	Prevents external impacts to WSB that could result in a release	
Mitigators	None			
Notes:	None			
References:	None			

Hazard Evaluation Table - Event FW-6-004

Description:
Collision of fuel delivery truck breaches Process Rooms outer wall causing spilled fuel to ignite resulting in release of radioactive material.

Locations:	**MAR:**
• WSB	• Entire HAW and LAW inventory

Release Mechanisms:
• Boiling liquid release.

Assumptions:
None

Causes:
• Vehicle impact

Unmitigated System Effects:	**Methods of Detection:**
None	• Fire detection and control room alarm. • Operator observation
Unmitigated Frequency: EU	**Mitigated Frequency:** Prevented

Consequence / Risk Rank

Receptor	Rad				Chem				Phy			
	Unmit.		PHR Mit.		Unmit.		PHR Mit.		Unmit.		PHR Mit.	
WG1	H	A2			M	B1			H	A2		
WG2	H	A2			M	B1			H	A2		
WG3	H	A2			M	B1						
MOI	M	B1			N	C						

Preventive Features:	
Engineered	None
Admin	• (SS) Traffic Control Program (Speed limit, physical barriers (e.g., Jersey barriers), or limited unobstructed "straight line" distance to Process Rooms wall.)
Mitigative Features:	
Engineered	• (Non-SC/SS) Fire suppression system (HAW area) • (Non-SC/SS) HAW area design and construction (Fire barrier around HAW area (qualified to appropriate fire rating and seismic performance criteria))
Admin	• (Non-SC/SS) Event Response Program (Worker performs appropriate response.) • (Non-SC/SS) {IC} Inventory Control Program (Limit on material outside the HAW process room) • (SS) Radiological Protection Program (Monitor of radiological conditions and application of appropriate response)

Credited SSCs and ACs

	Class	Control	Attribute	Affected Receptors
Preventers	SS	Traffic Control Program	Speed limit, physical barriers (e.g., Jersey barriers), or limited unobstructed "straight line" distance to Process Rooms wall.	
		Safety Function:	Prevent breach of Process Rooms exterior wall by preventing a high-speed vehicular impact.	
Mitigators	None			
Notes:	• Because of the proximity of the WSB to other facilities, to approach the exterior wall of the HAW Process Rooms, a sharp turn is expected to be required for a vehicle to approach the exterior wall of the HAW Process Rooms. Therefore, as the WSB design is finalized, this event is expected to be eliminated as not being a credible scenario.			
References:	None			

Hazard Evaluation Table - Event FW-6-005

Description:
Loss of utility service (electricity or water) results in a release of radioactive material.

Locations:	**MAR:**
• WSB	• Contamination

Release Mechanisms:
- Contamination migration

Assumptions:
None

Causes:
- NPH (freezing)
- NPH (lightning)
- NPH (seismic)
- NPH (tornado)
- Vehicle impact

Unmitigated System Effects:	**Methods of Detection:**
None	• Operator observation
Unmitigated Frequency: A	**Mitigated Frequency:** A

Consequence / Risk Rank

Receptor	Rad				Chem				Phy			
	Unmit.		PHR Mit.		Unmit.		PHR Mit.		Unmit.		PHR Mit.	
WG1	L	B	N	C	N	C	N	C	N	C	N	C
WG2	N	C	N	C	N	C	N	C	N	C	N	C
WG3	N	C	N	C	N	C	N	C				
MOI	N	C	N	C	N	C	N	C				

Preventive Features:	
Engineered	None
Admin	None
Mitigative Features:	
Engineered	None
Admin	• (Non-SC/SS) [FC] Event Response Program (Worker performs appropriate response.) • (Non-SC/SS) [FC] Radiological Protection Program (Monitor of radiological conditions and application of appropriate response)

Credited SSCs and ACs

	Class	Control	Attribute	Affected Receptors
Preventers	None			
Mitigators	None			
Notes:	• Loss of power resulting in PVVS failure is covered in HAL-2-005. Event FW-6-005 includes: -loss of power causes loss of HAW process room ventilation resulting in a radioactive material release or -loss of power causes loss of laboratory glovebox, sample glovebox or cementation enclosure ventilation resulting in a radioactive material release. Loss of water supply would not result in a significant safety consequence.			
References:	• NNP-WSB-2007-00033 indicates that fire suppression water supply does not need to be credited as a SS control.			

Hazard Evaluation Table - Event FW-7-001

Description:
Tornado impacts facility, resulting in radiological release

Locations:	**MAR:**
• WSB	• Inventory outside HAW process room and cementation area

Release Mechanisms:
• Spill

Assumptions:
• Walls around the HAW Area and the Cementation Area are assumed to be qualified to PC-3 for high winds and tornados.

Causes:
• Tornado

Unmitigated System Effects:	**Methods of Detection:**
None	• Operator observation • Radiation monitoring
Unmitigated Frequency: U	**Mitigated Frequency:** U

Consequence / Risk Rank

Receptor	Rad				Chem				Phy			
	Unmit.		PHR Mit.		Unmit.		PHR Mit.		Unmit.		PHR Mit.	
WG1	L	B	L	B	L	B	L	B	H	A1	H	A1
WG2	N	C	N	C	L	B	L	B	H	A1	H	A1
WG3	N	C	N	C	L	B	L	B				
MOI	N	C	N	C	N	C	N	C				

Preventive Features:	
Engineered	None
Admin	None
Mitigative Features:	
Engineered	• (SS) {IC} WSB Building Structure (Qualified to Appropriate High Wind Performance Criteria)
Admin	• (Non-SC/SS) [FC] Event Response Program (Worker performs appropriate response.) • (SS) {IC} Inventory Control Program (Limit on material outside the HAW process room) • (Non-SC/SS) [FC] Radiological Protection Program (Monitor of radiological conditions and application of appropriate response)

Credited SSCs and ACs

	Class	Control	Attribute	Affected Receptors
Preventers	None			
Mitigators	SS	Inventory Control Program	Limit on material outside the HAW process room	• Rad: WG1, WG2, WG3, MOI; • Chem: WG1, WG2, WG3;
		Safety Function:	Limits the MAR to quantities that were assumed during the hazard and accident analyses.	
	SS	WSB Building Structure	Qualified to Appropriate High Wind Performance Criteria	• Rad: WG1, WG2, WG3, MOI; • Chem: WG1, WG2, WG3; • Phy: WG1, WG2;
		Safety Function:	Maintains its structural integrity during high wind events to protect safety SSCs	
Notes:	None			
References:	None			

Hazard Evaluation Table - Event FW-7-002

Description:
Seismic event, results in radiological release

Locations:	**MAR:**
• WSB	• Entire HAW and LAW inventory • Mitigated MAR includes LAW solution, lab inventory, and TRU waste inventory.

Release Mechanisms:
• Spill

Assumptions:
None

Causes:
• Earthquake

Unmitigated System Effects:	**Methods of Detection:**
None	• Operator observation • Radiation monitoring
Unmitigated Frequency: U	**Mitigated Frequency:** U

Consequence / Risk Rank

Receptor	Rad				Chem				Phy			
	Unmit.		PHR Mit.		Unmit.		PHR Mit.		Unmit.		PHR Mit.	
WG1	H	A1	L	B	M	B1	N	C	H	A1	L	B
WG2	H	A1	L	B	M	B1	N	C	H	A1	L	B
WG3	H	A1	N	C	M	B1	N	C				
MOI	L	B	N	C	N	C	N	C				

Preventive Features:	
Engineered	None
Admin	None
Mitigative Features:	
Engineered	• (SS) Diesel Generator (Secondary Electric Power Supply) • (SS) HAW Cementation Transfer Line (HAW Cementation Transfer Line Core Pipe and Jacket (Qualified to the Appropriate Seismic Performance Criteria)) • (SS) HAW Process Piping, Valves and Vessels (HAW Process Piping, Valves and Vessels (Qualified to the Appropriate Seismic Performance Criteria)) • (SS) HAW Process Piping, Valves and Vessels (HAW Processing Vessels Steam Coils and Cooling Coils(Qualified to the Appropriate Seismic Performance Criteria)) • (SS) HAW process room ventilation system (Confinement (qualified to appropriate seismic performance criteria)) • (SS) HAW PVVS (Dilution air flow (qualified to appropriate seismic performance criteria)) • (SS) HAW Sample Lines (Seismically Qualified to Appropriated Performance Criteria) • (Non-SC/SS) [FC] Inlet Filters to PVV System (Filtration) • (Non-SC/SS) [FC] Seismic Isolation Valves and All Lines Leading to Them (Seismically Qualified to Appropriated Performance Criteria) • (SS) WSB building structure (Seismically qualified to appropriate performance criteria)
Admin	• (Non-SC/SS) [FC] Event Response Program (Worker performs appropriate response.) • (SS) {IC} Inventory Control Program (Limit on material outside the HAW process room) • (Non-SC/SS) [FC] Radiological Protection Program (Monitor of radiological conditions and application of appropriate response)

Credited SSCs and ACs

	Class	Control	Attribute	Affected Receptors
Preventers	None			
Mitigators	SS	Diesel Generator	Secondary Electric Power Supply	• Rad: WG1, WG2, WG3, MOI; • Chem: WG1, WG2, WG3; • Phy: WG1, WG2;
		Safety Function:	Provide electric power to active Safety Significant controls when sufficient power is not available from the primary electric power supply.	
	SS	HAW Cementation Transfer Line	HAW Cementation Transfer Line Core Pipe and Jacket (Qualified to the Appropriate Seismic Performance Criteria)	• Rad: WG1, WG2, WG3, MOI; • Chem: WG1, WG2, WG3;
		Safety Function:	Limits consequences to facility workers from a post-seismic spill by preventing the breaching of a transfer line during and after a seismic event.	
	SS	HAW Process Piping, Valves and Vessels	HAW Process Piping, Valves and Vessels (Qualified to the Appropriate Seismic Performance Criteria)	• Rad: WG3;
		Safety Function:	Limits consequences from a post-seismic spill by preventing spills during and after a seismic event.	
	SS	HAW Process Piping, Valves and Vessels	HAW Processing Vessels Steam Coils and Cooling Coils (Qualified to the Appropriate Seismic Performance Criteria)	• Rad: WG1, WG2, WG3, MOI; • Chem: WG1, WG2, WG3; • Phy: WG1, WG2;
		Safety Function:	Prevents the release of HAW material from an HAW vessel during and after a	

			seismic event.	
	SS	HAW process room ventilation system	Confinement (qualified to appropriate seismic performance criteria)	• Rad: WG1, WG2; • Chem: WG1, WG2;
		Safety Function:	Continues to provide confinement of hazardous material in the HAW process rooms during and after a seismic event.	
	SS	HAW PVVS	Dilution air flow (qualified to appropriate seismic performance criteria)	• Rad: WG1, WG2, WG3, MOI; • Chem: WG1, WG2, WG3; • Phy: WG1, WG2;
		Safety Function:	Maintains the flammable gas concentration below 25 % of the LFL by providing sufficient dilution flow during and after a seismic event.	
	SS	HAW Sample Lines	Seismically Qualified to Appropriated Performance Criteria	• Rad: WG1, WG2, WG3, MOI; • Chem: WG1, WG2, WG3; • Phy: WG1, WG2;
		Safety Function:	Prevents spill of HAW material during seismic event	
	SS	Inventory Control Program	Limit on material outside the HAW process room	• Rad: WG1, WG2, WG3, MOI; • Chem: WG1, WG2, WG3;
		Safety Function:	Limits the MAR to quantities that were assumed during the hazard and accident analyses.	
	SS	WSB building structure	Seismically qualified to appropriate performance criteria	• Rad: WG1, WG2, WG3, MOI; • Chem: WG1, WG2, WG3; • Phy: WG1, WG2;
		Safety Function:	Maintains its structural integrity during seismic events to protect safety SSCs.	
Notes:	• Stack must be evaluated for seismic II/I interactions.			
References:	None			

Hazard Evaluation Table - Event FW-7-003

Description:
Seismic event followed by fire, results in radiological release

Locations:
- WSB

MAR:
- Inventory outside HAW process room

Release Mechanisms:
- Aerosolization
- Boiling release due to fire.

Assumptions:
None

Causes:
- Earthquake

Unmitigated System Effects:
None

Methods of Detection:
- Fire detection and control room alarm.
- Operator observation
- Radiation monitoring

Unmitigated Frequency: U

Mitigated Frequency: U

Consequence / Risk Rank

Receptor	Rad				Chem				Phy			
	Unmit.		PHR Mit.		Unmit.		PHR Mit.		Unmit.		PHR Mit.	
WG1	H	A1	M	B1	M	B1	L	B	H	A1	H	A1
WG2	H	A1	M	B1	M	B1	L	B	H	A1	H	A1
WG3	L	B	N	C	M	B1	L	B				
MOI	N	C	N	C	N	C	N	C				

Preventive Features:

Engineered	None
Admin	None

Mitigative Features:

Engineered	• (SS) Fire Protection Program (Combustible controls) • (Non-SC/SS) [FC] Fire Suppression System (Sprinklers) • (SS) HAW area design and construction (Fire barrier around HAW area (qualified to appropriate fire rating and seismic performance criteria)) • (SS) HAW area design and construction (Fire barrier around and between the two PVVS trains (qualified to appropriate fire rating and seismic performance criteria)) • (Non-SC/SS) HAW cementation area design and construction (Fire barrier around cementation area (qualified to appropriate fire rating and seismic performance criteria)) • (SS) HAW PVVS (Confinement) • (SS) WSB building structure (Seismically qualified to appropriate performance criteria)
Admin	• (SS) Event Response Program (Worker performs appropriate response.) • (Non-SC/SS) [FC] Fire Protection Program (Fire department response) • (SS) Inventory Control Program (Limit on Radionuclide Inventory in Liquid Material outside the HAW Process Rooms) • (Non-SC/SS) [FC] Radiological Protection Program (Monitor of radiological conditions and application of appropriate response)

Credited SSCs and ACs

	Class	Control	Attribute	Affected Receptors
Preventers	None			
Mitigators	SS	Event Response Program	Worker performs appropriate response.	• Rad: WG1, WG2, WG3, MOI; • Chem: WG1, WG2, WG3;
		Safety Function:	Reduces worker exposure and contamination potential	
	SS	Fire Protection Program	Combustible controls	• Rad: WG1, WG2, WG3, MOI; • Chem: WG1, WG2, WG3;
		Safety Function:	Reduces the frequency of fires and the intensity of fires	
	SS	HAW area design and construction	Fire barrier around and between the two PVVS trains (qualified to appropriate fire rating and seismic performance criteria)	• Rad: WG1, WG2, WG3, MOI; • Chem: WG1, WG2, WG3;
		Safety Function:	Prevents fires from propagating into or between the duplicate PVVS rooms and SSCs.	
	SS	HAW area design and construction	Fire barrier around HAW area (qualified to appropriate fire rating and seismic performance criteria)	• Rad: WG1, WG2, WG3, MOI; • Chem: WG1, WG2, WG3;
		Safety Function:	Limits the consequences of a fire starting outside the HAW process rooms by reducing the impact on the MAR.	
	SS	HAW PVVS	Confinement	• Rad: WG1, WG2, WG3, MOI; • Chem: WG1, WG2, WG3;
		Safety Function:	Prevents release of airborne hazardous material by continuing to function during and	

			after an PC-3+ seismic event	
	SS	Inventory Control Program	Limit on Radionuclide Inventory in Liquid Material outside the HAW Process Rooms	• Rad: WG1, WG2, WG3, MOI;
		Safety Function:	Limits the MAR to quantities that were assumed during the hazard and accident analyses.	
	SS	WSB building structure	Seismically qualified to appropriate performance criteria	• Rad: WG1, WG2, WG3, MOI; • Chem: WG1, WG2, WG3; • Phy: WG1;
		Safety Function:	Maintains its structural integrity during seismic events to protect safety SSCs.	
Notes:	• No post seismic fire will be initiated in HAW Process Room.			
References:	None			

Hazard Evaluation Table - Event FW-7-004

Description:
Seismic event followed by an explosion, results in radiological release

Locations:
- WSB

MAR:
- Inventory inside HAW process room

Release Mechanisms:
- Aerosolization
- Aerosolization due to explosion.

Assumptions:
None

Causes:
- Earthquake

Unmitigated System Effects:
None

Methods of Detection:
- Loss of steam coil pressure
- Operator observation
- Radiation monitoring
- Vessel ventilation high or low pressure alarm

Unmitigated Frequency: U

Mitigated Frequency: Prevented

Consequence / Risk Rank

Receptor	Rad				Chem				Phy			
	Unmit.		PHR Mit.		Unmit.		PHR Mit.		Unmit.		PHR Mit.	
WG1	H	A1			M	B1			H	A1		
WG2	H	A1			L	B			H	A1		
WG3	H	A1			L	B						
MOI	L	B			N	C						

Preventive Features:

Engineered	• (SS) HAW PVVS (Dilution air flow (qualified to appropriate seismic performance criteria))
Admin	None

Mitigative Features:

Engineered	• (SS) Diesel Generator (Secondary Electric Power Supply) • (SS) HAW area design and construction (Fire barrier around HAW area (qualified to appropriate fire rating and seismic performance criteria)) • (SS) HAW area design and construction (Fire barrier around and between the two PVVS trains (qualified to appropriate fire rating and seismic performance criteria)) • (SS) HAW cementation area design and construction (Fire barrier around cementation area (qualified to appropriate fire rating and seismic performance criteria)) • (SS) HAW process room ventilation system (Confinement (qualified to appropriate seismic performance criteria)) • (SS) WSB building structure (Seismically qualified to appropriate performance criteria)
Admin	• (SS) {IC} Inventory Control Program (Limit on material outside the HAW process room)

Credited SSCs and ACs

	Class	Control	Attribute	Affected Receptors
Preventers	SS	HAW PVVS	Dilution air flow (qualified to appropriate seismic performance criteria)	
		Safety Function:	Maintains the flammable gas concentration below 25 % of the LFL by providing sufficient dilution flow during and after a seismic event.	
Mitigators	SS	Diesel Generator	Secondary Electric Power Supply	• Rad: WG1, WG2; • Chem: WG1, WG2;
		Safety Function:	Provide electric power to active Safety Significant controls when sufficient power is not available from the primary electric power supply.	
	SS	HAW area design and construction	Fire barrier around HAW area (qualified to appropriate fire rating and seismic performance criteria)	• Rad: WG1, WG2, WG3, MOI; • Chem: WG1, WG2, WG3;
		Safety Function:	Limits the consequences of a fire starting outside the HAW process rooms by reducing the impact on the MAR.	
	SS	HAW area design and construction	Fire barrier around and between the two PVVS trains (qualified to appropriate fire rating and seismic performance criteria)	• Rad: WG1, WG2, WG3; • Chem: WG1, WG2, WG3;
		Safety Function:	Prevents fires from propagating into or between the duplicate PVVS rooms and SSCs.	
	SS	HAW process room ventilation system	Confinement (qualified to appropriate seismic performance criteria)	• Rad: WG1, WG2; • Chem: WG1, WG2;
		Safety Function:	Continues to provide confinement of hazardous material in the HAW process rooms during and after a seismic event.	
	SS	Inventory Control Program	Limit on material outside the HAW process room	• Rad: WG1, WG2, WG3, MOI; • Chem: WG1, WG2, WG3;
		Safety Function:	Limits the MAR to quantities that were assumed during the hazard and accident	

			analyses.	
	SS	WSB building structure	Seismically qualified to appropriate performance criteria	• Rad: WG1, WG2, MOI; • Chem: WG1, WG2; • Phy: WG1;
		Safety Function:	Maintains its structural integrity during seismic events to protect safety SSCs.	
Notes:	None			
References:	None			

Hazard Evaluation Table - Event FW-7-005

Description:
Seismic event causes a fire resulting in a radioactive material release including material in the HAW Processing Rooms and Cementation Area.

Locations:	**MAR:**
• WSB	• Entire HAW and LAW inventory

Release Mechanisms:
• Boiling liquid release.

Assumptions:
None

Causes:
• Earthquake

Unmitigated System Effects:	**Methods of Detection:**
None	• Fire detection and control room alarm.
Unmitigated Frequency: BEU	**Mitigated Frequency:** BEU

Consequence / Risk Rank

Receptor	Rad				Chem				Phy			
	Unmit.		PHR Mit.		Unmit.		PHR Mit.		Unmit.		PHR Mit.	
WG1	H	C/A3*	H	C/A3*	M	C/B1**	M	C/B1**	H	C/A3*	H	C/A3*
WG2	H	C/A3*	H	C/A3*	M	C/B1**	M	C/B1**	H	C/A3*	H	C/A3*
WG3	H	C/A3*	H	C/A3*	M	C/B1**	M	C/B1**				
MOI	M	C/B1**	M	C/B1**	N	C	N	C				

Preventive Features:

Engineered	None
Admin	None

Mitigative Features:

Engineered	• (SS) HAW area design and construction (Fire barrier around and between the two PVVS trains (qualified to appropriate fire rating and seismic performance criteria)) • (SS) HAW area design and construction (Fire barrier around HAW area (qualified to appropriate fire rating and seismic performance criteria)) • (SS) HAW cementation area design and construction (Fire barrier around cementation area (qualified to appropriate fire rating and seismic performance criteria)) • (SS) HAW process room ventilation system (Confinement (qualified to appropriate seismic performance criteria)) • (SS) HAW PVVS (Confinement) • (SS) [FC] WSB building structure (Seismically qualified to appropriate performance criteria)
Admin	• (SS) Event Response Program (Worker performs appropriate response.) • (SS) Fire Protection Program (Combustible controls) • (Non-SC/SS) Fire Protection Program (Fire department response) • (SS) {IC} Inventory Control Program (Limit on material outside the HAW process room)

Credited SSCs and ACs

	Class	Control	Attribute	Affected Receptors
Preventers	None			
Mitigators	None			
Notes:	• Waste in the facility included in the HAW and LAW inventory. Other waste is in waste storage building.			
References:	None			

High Activity Process Line Events

Hazard Evaluation Table - Event HAL-1-001

Description:
Fire starts in HAW process rooms resulting in the release of HAW material

Locations:	**MAR:**
• HAW process room	• Entire HAW inventory

Release Mechanisms:
- Boiling liquid release.

Assumptions:
None

Causes:
- Combustible material AND ignition sources: maintenance; electrical; mechanical friction; flammable gases (H2)
- Wildland fire (embers in air intake)

Unmitigated System Effects:	**Methods of Detection:**
None	• Fire detection and control room alarm.
Unmitigated Frequency: U	**Mitigated Frequency:** U

Consequence / Risk Rank

Receptor	Rad				Chem				Phy			
	Unmit.		PHR Mit.		Unmit.		PHR Mit.		Unmit.		PHR Mit.	
WG1	H	A1	L	B	M	B1	N	C	L	B	L	B
WG2	H	A1	L	B	M	B1	N	C	L	B	L	B
WG3	H	A1	L	B	L	B	N	C				
MOI	M	B1	N	C	N	C	N	C				

Preventive Features:	
Engineered	None
Admin	None
Mitigative Features:	
Engineered	• (SS) Fire suppression system (HAW area) • (SS) HAW area fire barrier (Appropriate fire rating) • [FC] HAW Process Piping, Valves and Vessels (HAW Vessels) • [FC] HAW PVVS (Confinement)
Admin	• (SS) Event Response Program (Worker performs appropriate response.) • (SS) Fire Protection Program (Adequate fire water supply) • (SS) Fire Protection Program (Flammable liquid and gas storage prohibited in the process rooms) • (SS) Fire Protection Program (Combustible controls) • (SS) Inventory Control Program (Limit on radiological inventory in liquid material inside the HAW process room)

Credited SSCs and ACs

	Class	Control	Attribute	Affected Receptors
Preventers	None			
Mitigators	SS	Event Response Program	Worker performs appropriate response.	• Rad: WG1, WG2, WG3, MOI; • Chem: WG1, WG2, WG3;
		Safety Function:	Reduces worker exposure and contamination potential	
	SS	Fire Protection Program	Adequate fire water supply	• Rad: WG1, WG2, WG3, MOI; • Chem: WG1, WG2, WG3;
		Safety Function:	Limits the consequences to all workers from the release of radioactive material during a fire by ensuring that an adequate water supply is available.	
	SS	Fire Protection Program	Flammable liquid and gas storage prohibited in the process rooms	• Rad: WG1, WG2, WG3, MOI; • Chem: WG1, WG2, WG3;
		Safety Function:	Reduces the frequency of fires and the intensity of fires	
	SS	Fire Protection Program	Combustible controls	• Rad: WG1, WG2, WG3, MOI; • Chem: WG1, WG2, WG3;
		Safety Function:	Reduces the frequency of fires and the intensity of fires	
	SS	Fire suppression system	HAW area	• Rad: WG1, WG2, WG3, MOI; • Chem: WG1, WG2, WG3;
		Safety Function:	Reduces the amount of radioactive material released by reducing the intensity and duration of fires inside the HAW area.	
	SS	HAW area fire barrier	Appropriate fire rating	• Rad: WG1, WG2, WG3, MOI; • Chem: WG1, WG2, WG3;
		Safety Function:	Limits the consequences of a fire starting outside the HAW area by reducing the impact on the MAR.	

	SS	Inventory Control Program	Limit on radiological inventory in liquid material inside the HAW process room	• Rad: WG1, WG2, WG3, MOI; • Chem: WG1, WG2, WG3;
		Safety Function:	Limits the MAR to quantities that were assumed during the hazard and accident analyses.	
Notes:	None			
References:	None			

Hazard Evaluation Table - Event HAL-1-002

Description:
Fire involves HAW sample GB

Locations:
- HAW Sample GB

MAR:
- 6.88 curies of Am-241 (glovebox or hood (1 liter of HAW Liquid or 2 grams of Am-241))

Release Mechanisms:
- Boiling liquid release.

Assumptions:
None

Causes:
- Combustible material AND ignition sources: maintenance; electrical; mechanical friction

Unmitigated System Effects:
None

Methods of Detection:
- Fire detection and control room alarm.
- Operator observation

Unmitigated Frequency: A

Mitigated Frequency: A

Consequence / Risk Rank

Receptor	Rad				Chem				Phy			
	Unmit.		PHR Mit.		Unmit.		PHR Mit.		Unmit.		PHR Mit.	
WG1	L	B	N	C	N	C	N	C	M	B1	L	B
WG2	L	B	N	C	N	C	N	C	M	B1	L	B
WG3	N	C	N	C	N	C	N	C				
MOI	N	C	N	C	N	C	N	C				

Preventive Features:

Engineered	None
Admin	• (Non-SC/SS) [FC] Fire Protection Program (Combustible controls in vicinity of glovebox)

Mitigative Features:

Engineered	• (Non-SC/SS) [FC] HAW Sample Glovebox Room Fire Suppression System (Sprinklers)
Admin	• (Non-SC/SS) [FC] Event Response Program (Worker performs appropriate response.) • (Non-SC/SS) [FC] Fire Protection Program (Combustible controls in vicinity of glovebox)

Credited SSCs and ACs

	Class	Control	Attribute	Affected Receptors
Preventers	None			
Mitigators	None			
Notes:	• (Moderate physical consequences due to the potential for burns)			
References:	None			

Hazard Evaluation Table - Event HAL-2-001

Description:
Energetic reaction during neutralization in cementation head tanks releases HAW material

Locations:
- HAW process area

MAR:
- Small amount of HAW liquid (1 liter of HAW liquid or 2 gram of Am-241) ejected to process room floor

Release Mechanisms:
- Spill

Assumptions:
None

Causes:
- Add in wrong order
- No cooling
- No mixing
- Operator error
- Rapid addition of base

Unmitigated System Effects:
None

Methods of Detection:
- Radiation monitoring

Unmitigated Frequency: A

Mitigated Frequency: A

Consequence / Risk Rank

Receptor	Rad				Chem				Phy			
	Unmit.		PHR Mit.		Unmit.		PHR Mit.		Unmit.		PHR Mit.	
WG1	L	B	N	C	N	C	N	C	M	B1	N	C
WG2	L	B	N	C	N	C	N	C	M	B1	N	C
WG3	N	C	N	C	N	C	N	C				
MOI	N	C	N	C	N	C	N	C				

Preventive Features:

Engineered	• (Non-SC/SS) [FC] Neutralization tanks cooling system (Temperature control)
Admin	• (Non-SC/SS) [FC] Mixing in neutralization tank (Thorough mixing) • (Non-SC/SS) [FC] Operator training & procedures (Addition of materials (e.g., during cementation or neutralization))

Mitigative Features:

Engineered	• (Non-SC/SS) [FC] HAW process room ventilation system (Filtration of hazardous material) • (Non-SC/SS) [FC] HAW PVVS (Confinement) • (Non-SC/SS) [FC] Overflow line to collection point (LAW process) or to collection tank (HAW process) (Containment)
Admin	• (Non-SC/SS) [FC] Event Response Program (Worker performs appropriate response.) • (Non-SC/SS) [FC] Radiological Protection Program (Monitor of radiological conditions and application of appropriate response)

Credited SSCs and ACs

	Class	Control	Attribute	Affected Receptors
Preventers	None			
Mitigators	None			
Notes:	• Heat, splashing, overflow, gas generation (NOx) • I.C. ? All HAW process vessels are stainless steel tank with no direct discharge path to process room			
References:	None			

Hazard Evaluation Table - Event HAL-2-002

Description:
Energetic reaction in Acid Overflow Tank releases HAW material

Locations:
- HAW process area

MAR:
- Small amount of HAW liquid (1 liter of HAW liquid or 2 gram of Am-241) ejected to process room floor

Release Mechanisms:
- Spill

Assumptions:
None

Causes:
- Operator error
- Overflow or drop of head tank contents to Acid Overflow Tank

Unmitigated System Effects:
None

Methods of Detection:
- Radiation monitoring

Unmitigated Frequency: A

Mitigated Frequency: A

Consequence / Risk Rank

Receptor	Rad				Chem				Phy			
	Unmit.		PHR Mit.		Unmit.		PHR Mit.		Unmit.		PHR Mit.	
WG1	L	B	N	C	N	C	N	C	M	B1	L	B
WG2	L	B	N	C	N	C	N	C	M	B1	L	B
WG3	N	C	N	C	N	C	N	C				
MOI	N	C	N	C	N	C	N	C				

Preventive Features:

Engineered	None
Admin	• (Non-SC/SS) [FC] Operator training & procedures (Material transfer procedures)

Mitigative Features:

Engineered	• (Non-SC/SS) [FC] HAW process room ventilation system (Filtration of hazardous material) • (Non-SC/SS) [FC] HAW PVVS (Confinement) • (Non-SC/SS) [FC] Overflow Tank (Vented to Sump)
Admin	• (Non-SC/SS) [FC] Event Response Program (Worker performs appropriate response.) • (Non-SC/SS) [FC] HAW process room ventilation system (Filtration of hazardous material) • (Non-SC/SS) [FC] Radiological Protection Program (Monitor of radiological conditions and application of appropriate response)

Credited SSCs and ACs

	Class	Control	Attribute	Affected Receptors
Preventers	None			
Mitigators	None			
Notes:	• Normal operation does not include addition of caustic to the Acid Overflow Tank. • Physical consequences due to heat, splashing, overflow, gas generation (NOx), etc.			
References:	None			

Hazard Evaluation Table - Event HAL-2-003

Description:
Uncontrolled chemical reaction in HAW Head Tank results in eructation (burp materials from tank)

Locations:
- HAW Evaporator Head Tank

MAR:
- Small amount of HAW liquid (1 liter of HAW liquid or 2 gram of Am-241) ejected to process room floor

Release Mechanisms:
- Spill

Assumptions:
None

Causes:
- Caustic waste recycled to the HAW Head Tank (Normal operation does not include addition of caustic to the HAW Head Tank)
- Operator error

Unmitigated System Effects:
None

Methods of Detection:
- Radiation monitoring

Unmitigated Frequency: A

Mitigated Frequency: A

Consequence / Risk Rank

Receptor	Rad				Chem				Phy			
	Unmit.		PHR Mit.		Unmit.		PHR Mit.		Unmit.		PHR Mit.	
WG1	L	B	N	C	N	C	N	C	M	B1	N	C
WG2	L	B	N	C	N	C	N	C	M	B1	N	C
WG3	N	C	N	C	N	C	N	C				
MOI	N	C	N	C	N	C	N	C				

Preventive Features:

Engineered	None
Admin	(Non-SC/SS) [FC] Operator training & procedures (Material transfer procedures)

Mitigative Features:

Engineered	(Non-SC/SS) [FC] HAW process room ventilation system (Filtration of hazardous material) (Non-SC/SS) [FC] HAW PVVS (Confinement) (Non-SC/SS) [FC] Overflow line to collection point (LAW process) or to collection tank (HAW process) (Containment)
Admin	(Non-SC/SS) [FC] Event Response Program (Worker performs appropriate response.) (Non-SC/SS) [FC] Radiological Protection Program (Monitor of radiological conditions and application of appropriate response)

Credited SSCs and ACs

	Class	Control	Attribute	Affected Receptors
Preventers	None			
Mitigators	None			
Notes:	I.C. - All HAW process vessels are stainless steel tanks that are not directly open to the room.			
References:	None			

Hazard Evaluation Table - Event HAL-2-004

Description:
Red oil explosion in HAW evaporator resulting in the release of HAW material

Locations:
- HAW evaporator

MAR:
- Evaporator contents

Release Mechanisms:
- High-pressure venting.

Assumptions:
- Waste streams transferred to WSB will meet WAC established to protect the facility inventory limits, assumed hydrogen generation rates, radiation dose rates, chemical content, and criticality evaluation bases.

Causes:
- Organic carryover from MFFF (TBP) OR the accumulation of organic (TBP) in WSB process AND strong acid AND a temperature sufficiently high to generate volatile organics rapidly enough for a flammable atmosphere to develop

Unmitigated System Effects:
None

Methods of Detection:
- High evaporator temperature alarm
- High steam pressure alarm
- High steam temperature alarm
- Operator observation
- Radiation monitoring

Unmitigated Frequency: NC

Mitigated Frequency: NC

Consequence / Risk Rank

Receptor	Rad				Chem				Phy			
	Unmit.		PHR Mit.		Unmit.		PHR Mit.		Unmit.		PHR Mit.	
WG1	H	NA	H	NA	M	NA	M	NA	H	NA	H	NA
WG2	H	NA	H	NA	M	NA	M	NA	H	NA	H	NA
WG3	H	NA	H	NA	L	NA	L	NA				
MOI	H	NA	H	NA	N	NA	N	NA				

Preventive Features:

Engineered	None
Admin	• (SS) {IC} Waste Acceptance Criteria Program (Verification that organic content (primarily TBP) in feed stream meets the WSB WAC)

Mitigative Features:

Engineered	None
Admin	None

Credited SSCs and ACs

	Class	Control	Attribute	Affected Receptors
Preventers	None			
Mitigators	None			
Notes:	• Beyond Design Basis Accident • Feed streams will not contain sufficient organics to cause a red oil explosion. This is an assumption that will be protected by the WAC.			
References:	None			

Hazard Evaluation Table - Event HAL-2-004a

Description:
In the HAW evaporator, trace levels of organic compounds decompose creating a flammable atmosphere that causes an explosion resulting in the release of radioactive material.

Locations:	**MAR:**
• HAW Evaporator	• Evaporator contents

Release Mechanisms:
• High-pressure venting.

Assumptions:
None

Causes:
• Organic carryover from MFFF (TBP) OR the accumulation of organic (TBP) in WSB process AND strong acid AND a temperature sufficiently high to generate volatile organics rapidly enough for a flammable atmosphere to develop

Unmitigated System Effects:	**Methods of Detection:**
None	• Operator observation • Radiation monitoring
Unmitigated Frequency: U	**Mitigated Frequency:** Prevented

Consequence / Risk Rank

Receptor	Rad				Chem				Phy			
	Unmit.		PHR Mit.		Unmit.		PHR Mit.		Unmit.		PHR Mit.	
WG1	H	A1			M	B1			H	A1		
WG2	H	A1			M	B1			H	A1		
WG3	H	A1			L	B						
MOI	L	B			N	C						

Preventive Features:

Engineered	• (SS) HAW Evaporator High Steam Pressure Interlock (Prevention of Steam Pressures Greater than 25 psig) • (SS) HAW Evaporator High Temperature Interlock (130 degrees C) (Prevention of Temperatures Greater than 130 Degrees C) • (Non-SC/SS) Steam system (Steam regulated to below 25 psig)
Admin	• (Non-SC/SS) Evaporator normal operating limits (Evaporator temperature and pH limits) • (Non-SC/SS) Sampling for organics ahead of evaporator (Notification of high organic concentration ahead of evaporator) • (SS) Waste Acceptance Criteria Program (Verification that organic content (primarily TBP) in feed stream meets the WSB WAC)

Mitigative Features:

Engineered	• (Non-SC/SS) HAW Process Room Design (Containment) • (Non-SC/SS) HAW process room ventilation system (Filtration of hazardous material)
Admin	• (Non-SC/SS) Event Response Program (Worker evacuates area.) • (Non-SC/SS) Radiological Protection Program (Monitor of radiological conditions and application of appropriate response)

Credited SSCs and ACs

	Class	Control	Attribute	Affected Receptors
Preventers	SS	HAW Evaporator High Steam Pressure Interlock	Prevention of Steam Pressures Greater than 25 psig	
		Safety Function:	Prevents steam in the steam coil from reaching 25 psig, thus preventing HAW from reaching a temperature sufficiently high to generate volatile organics rapidly enough for a flammable atmosphere to develop.	
	SS	HAW Evaporator High Temperature Interlock (130 degrees C)	Prevention of Temperatures Greater than 130 Degrees C	
		Safety Function:	Prevents the HAW from reaching 130 degrees C.	
	SS	Waste Acceptance Criteria Program	Verification that organic content (primarily TBP) in feed stream meets the WSB WAC	
		Safety Function:	Prevent introduction of sufficient organic compounds to produce a flammable mixture in the WSB vessels (including the evaporators).	
Mitigators	None			
Notes:	None			
References:	None			

Hazard Evaluation Table - Event HAL-2-005

Description:
H2 generation in HAW Vessel leads to deflagration

Locations:
- HAW processing area

MAR:
- Single vessel

Release Mechanisms:
- Aerosolization due to explosion.

Assumptions:
- HAW Tank volume and headspace capacities will be consistent with assumptions used in the flammable gas generation rate evaluation.
- Waste streams transferred to WSB will meet waste acceptance criteria established to protect the facility inventory limits, assumed hydrogen generation rates, radiation dose rates, chemical content, and criticality evaluation bases.

Causes:
- Buildup of flammable gas (H2) caused by insufficient dilution flow as a result of:

-Operator error
-Loss of normal dilution air (e.g., due to loss of power)

AND

Ignition Sources
-Maintenance
-Electrical
-Mechanical friction

Unmitigated System Effects:
None

Methods of Detection:
- Operator observation
- Radiation monitoring

Unmitigated Frequency: U

Mitigated Frequency: Prevented

Consequence / Risk Rank

Receptor	Rad				Chem				Phy			
	Unmit.		PHR Mit.		Unmit.		PHR Mit.		Unmit.		PHR Mit.	
WG1	H	A1			M	B1			H	A1		
WG2	H	A1			M	B1			H	A1		
WG3	H	A1			L	B						
MOI	L	B			N	C						

Preventive Features:

Engineered	• (SS) Diesel Generator (Secondary Electric Power Supply) • (SS) {IC} HAW process piping, valves and vessels (Overflow lines on HAW vessels connected to overflow tank) • (SS) HAW PVVS (Dilution air flow) • (Non-SC/SS) Liquid level and density measurement equipment (Dilution air supply) • (Non-SC/SS) Vessels (Electrically grounded)
Admin	• (Non-SC/SS) [FC] Operator training & procedures (Periodic surveillance of dilution flow) • (SS) Waste Acceptance Criteria Program (Verification that radionuclide content in feed stream meets the WSB WAC)

Mitigative Features:

Engineered	• (Non-SC/SS) [FC] HAW process room ventilation system (Filtration of hazardous material)
Admin	• (Non-SC/SS) [FC] Event Response Program (Worker performs appropriate response.) • (Non-SC/SS) [FC] Radiological Protection Program (Monitor of radiological conditions and application of appropriate response)

Credited SSCs and ACs

	Class	Control	Attribute	Affected Receptors
Preventers	SS	Diesel Generator	Secondary Electric Power Supply	
		Safety Function:	Provide electric power to active Safety Significant controls when sufficient power is not available from the primary electric power supply.	
	SS	HAW process piping, valves and vessels	Overflow lines on HAW vessels connected to overflow tank	
		Safety Function:	Protects initial conditions assumed for evaluation of flammable gas generation in the HAW process vessels by establishing the HAW process vessels maximum capacity and minimum headspace.	
	SS	HAW PVVS	Dilution air flow	
		Safety Function:	Maintain flammable gas concentration below 25 % of the LFL.	
	SS	Waste Acceptance Criteria Program	Verification that radionuclide content in feed stream meets the WSB WAC	• Rad: WG1, WG2, WG3, MOI; • Phy: WG1;
		Safety Function:	Protects the radionuclide content assumptions used in the calculation of hydrogen generation rates and time to LFL.	
Mitigators	None			
Notes:	• I.C. - WAC and overflow lines protect assumptions used in the H2 generation rate calculations.			
References:	None			

Hazard Evaluation Table - Event HAL-2-006

Description:
H2 generation in HAW Evaporator leads to deflagration

Locations:	**MAR:**
• HAW processing area	• Evaporator contents

Release Mechanisms:
• Aerosolization due to energetic deflagration.

Assumptions:
• Waste streams transferred to WSB will meet waste acceptance criteria established to protect the facility inventory limits, assumed hydrogen generation rates, radiation dose rates, chemical content, and criticality evaluation bases.

Causes:
• Buildup of flammable gas (H2) due to solution being left in the evaporator during shutdown, operator error, etc. AND Ignition Sources: Maintenance; Electrical; Mechanical friction

Unmitigated System Effects:	**Methods of Detection:**
None	• Operator observation • Radiation monitoring
Unmitigated Frequency: U	**Mitigated Frequency:** Prevented

Consequence / Risk Rank

Receptor	Rad				Chem				Phy			
	Unmit.		PHR Mit.		Unmit.		PHR Mit.		Unmit.		PHR Mit.	
WG1	H	A1			M	B1			H	A1		
WG2	H	A1			M	B1			H	A1		
WG3	H	A1			L	B						
MOI	L	B			N	C						

Preventive Features:

Engineered	• (SS) Diesel Generator (Secondary Electric Power Supply) • (SS) {IC} HAW process piping, valves and vessels (Evaporator Vessel Design) • (SS) HAW PVVS (Dilution air flow) • (Non-SC/SS) Liquid level and density measurement equipment (Dilution air supply) • (Non-SC/SS) [FC] Vessel (ASME Code Compliance) • (Non-SC/SS) Vessels (Electrically grounded)
Admin	• (Non-SC/SS) [FC] Operator training & procedures (Periodic surveillance of dilution flow) • (SS) {IC} Waste Acceptance Criteria Program (Verification that radionuclide content in feed stream meets the WSB WAC)

Mitigative Features:

Engineered	• (Non-SC/SS) [FC] HAW process room ventilation system (Filtration of hazardous material)
Admin	• (Non-SC/SS) [FC] Event Response Program (Worker performs appropriate response.) • (Non-SC/SS) [FC] Radiological Protection Program (Monitor of radiological conditions and application of appropriate response)

Credited SSCs and ACs

	Class	Control	Attribute	Affected Receptors
Preventers	SS	Diesel Generator	Secondary Electric Power Supply	
		Safety Function:	Provide electric power to active Safety Significant controls when sufficient power is not available from the primary electric power supply.	
	SS	HAW process piping, valves and vessels	Evaporator Vessel Design	• Rad: WG1, WG2, WG3, MOI;
		Safety Function:	Protects initial conditions assumed for evaluation of flammable gas generation in the HAW process vessels by establishing the HAW process vessels maximum capacity and minimum headspace.	
	SS	HAW PVVS	Dilution air flow	
		Safety Function:	Maintain flammable gas concentration below 25 % of the LFL.	
	SS	Waste Acceptance Criteria Program	Verification that radionuclide content in feed stream meets the WSB WAC	
		Safety Function:	Protects the radionuclide content assumptions used in the calculation of hydrogen generation rates and time to LFL.	
Mitigators	None			
Notes:	• I.C. - Waste Constituent Limits (Protect assumptions used in the H2 generation rate calculations)			
References:	None			

Hazard Evaluation Table - Event HAL-2-007

Description:
Detonation as a result of the buildup of H2 in any HAW liquid process line

Locations:	**MAR:**
• Inside WSB	• Single vessel

Release Mechanisms:
- Aerosolization
- Spill

Assumptions:
- Waste streams transferred to WSB will meet waste acceptance criteria established to protect the facility inventory limits, assumed hydrogen generation rates, radiation dose rates, chemical content, and criticality evaluation bases.

Causes:
- Radiolysis AND ignition sources

Unmitigated System Effects:	**Methods of Detection:**
None	• Operator observation • Radiation monitoring
Unmitigated Frequency: U	**Mitigated Frequency:** U

Consequence / Risk Rank

Receptor	Rad				Chem				Phy			
	Unmit.		PHR Mit.		Unmit.		PHR Mit.		Unmit.		PHR Mit.	
WG1	H	A1	N	C	M	B1	N	C	N	C	N	C
WG2	H	A1	N	C	M	B1	N	C	N	C	N	C
WG3	M	B1	N	C	L	B	N	C				
MOI	N	C	N	C	N	C	N	C				

Preventive Features:	
Engineered	None
Admin	None
Mitigative Features:	
Engineered	• (SS) Diesel Generator (Secondary Electric Power Supply) • (SS) HAW Cementation Transfer Line (Core Pipe) • (SS) HAW cementation transfer line (Jacket) • (SS) HAW Process Piping, Valves and Vessels (Failure Mode) • (SS) HAW Process Piping, Valves and Vessels (HAW sample lines) • (SS) HAW process room ventilation system (Filtration of hazardous material)
Admin	• (SS) Event Response Program (Worker performs appropriate response.)

Credited SSCs and ACs

	Class	Control	Attribute	Affected Receptors
Preventers	None			
Mitigators	SS	Diesel Generator	Secondary Electric Power Supply	• Rad: WG1, WG2, WG3, MOI; • Chem: WG1, WG2, WG3;
		Safety Function:	Provide electric power to active Safety Significant controls when sufficient power is not available from the primary electric power supply.	
	SS	Event Response Program	Worker performs appropriate response.	• Rad: WG1, WG2, WG3, MOI; • Phy: WG1;
		Safety Function:	Reduces worker exposure and contamination potential	
	SS	HAW Cementation Transfer Line	Core Pipe	• Rad: WG1, WG2; • Chem: WG1, WG2;
		Safety Function:	Limits consequences to the facility worker from an explosion by not failing in a manner that compromises the containment function of the jacket.	
	SS	HAW cementation transfer line	Jacket	• Rad: WG1, WG2, WG3, MOI; • Chem: WG1, WG2, WG3;
		Safety Function:	Contains leaks from core pipe and directs them to a collection point.	
	SS	HAW Process Piping, Valves and Vessels	Failure Mode	• Rad: WG1, WG2, WG3, MOI; • Chem: WG1, WG2, WG3; • Phy: WG1;
		Safety Function:	Will not fragment and cause physical injury.	
	SS	HAW Process Piping, Valves and Vessels	HAW sample lines	• Rad: WG1, WG2, WG3; • Chem: WG1, WG2, WG3;
		Safety Function:	Limits consequences to all workers by not failing in a manner that compromises containment of a jacketed line.	
	SS	HAW process room ventilation system	Filtration of hazardous material	• Rad: WG1, WG2, WG3, MOI; • Chem: WG1, WG2, WG3;
		Safety Function:	Provides filtration of any hazardous material that is released in the process rooms.	
Notes:	None			
References:	None			

Hazard Evaluation Table - Event HAL-2-008

Description:
Explosion resulting from the buildup of hydrogen in a charge vessel for one of the fluidic transfer pumps located inside the HAW process vessels.

Locations:	**MAR:**
• HAW processing area	• Single vessel

Release Mechanisms:
- Aerosolization due to explosion.

Assumptions:
- Waste streams transferred to WSB will meet waste acceptance criteria established to protect the facility inventory limits, assumed hydrogen generation rates, radiation dose rates, chemical content, and criticality evaluation bases.

Causes:
- Buildup of hydrogen in a charge vessel for one of the HAW fluidic transfer pumps

Unmitigated System Effects:	**Methods of Detection:**
None	• Operator observation • Radiation monitoring • Vessel ventilation high or low pressure alarm
Unmitigated Frequency: U	**Mitigated Frequency:** U

Consequence / Risk Rank

Receptor	Rad				Chem				Phy			
	Unmit.		PHR Mit.		Unmit.		PHR Mit.		Unmit.		PHR Mit.	
WG1	H	A1	N	C	M	B1	N	C	N	C	N	C
WG2	H	A1	N	C	M	B1	N	C	N	C	N	C
WG3	M	B1	N	C	L	B	N	C				
MOI	N	C	N	C	N	C	N	C				

Preventive Features:	
Engineered	None
Admin	None
Mitigative Features:	
Engineered	• (SS) HAW Process Piping, Valves and Vessels (Fluidic Transfer Pump Charge Vessel) • (SS) HAW Process Piping, Valves and Vessels (Confinement) • (SS) HAW PVVS (Confinement)
Admin	None

Credited SSCs and ACs

	Class	Control	Attribute	Affected Receptors
Preventers	None			
Mitigators	SS	HAW Process Piping, Valves and Vessels	Fluidic Transfer Pump Charge Vessel	• Rad: WG1, WG2, WG3, MOI; • Chem: WG1, WG2, WG3;
		Safety Function:	The fluidic pump charge vessel does not fail in a fashion that will compromise the integrity of the HAW process vessel.	
	SS	HAW Process Piping, Valves and Vessels	Confinement	• Rad: WG1, WG2, WG3, MOI; • Chem: WG1, WG2, WG3;
		Safety Function:	Integrity of vessel is not compromised during energetic failure of fluidic transfer pump charge vessel.	
	SS	HAW PVVS	Confinement	• Rad: WG1, WG2, WG3, MOI; • Chem: WG1, WG2;
		Safety Function:	Provides filtration of airborne hazardous material during and after explosion in the fluidic transfer pump charge vessel.	
Notes:	None			
References:	None			

Hazard Evaluation Table - Event HAL-3-001

Description:
HAW solution leaks from transfer line between HAW Process Room and HAW Cementation Process

Locations:
- WSB

MAR:
- 45 grams of Am-241 (one HAW cementation head tank volume)

Release Mechanisms:
- Spill

Assumptions:
None

Causes:
- Damage from facility equipment (missile, etc.)
- Maintenance activity

Unmitigated System Effects:
None

Methods of Detection:
- Operator observation
- Radiation monitoring

Unmitigated Frequency: A

Mitigated Frequency: Prevented

Consequence / Risk Rank

Receptor	Rad				Chem				Phy			
	Unmit.		PHR Mit.		Unmit.		PHR Mit.		Unmit.		PHR Mit.	
WG1	H	A1			N	C			N	C		
WG2	H	A1			N	C			N	C		
WG3	L	B			N	C						
MOI	N	C			N	C						

Preventive Features:	
Engineered	• (SS) HAW Cementation Transfer Line (HAW Cementation Transfer Line Pipe Chase)
Admin	• (Non-SC/SS) [FC] Maintenance procedures (Transfer line maintenance and inspection)
Mitigative Features:	
Engineered	• (Non-SC/SS) [FC] Building ventilation system w/HEPA (Containment) • (Non-SC/SS) HAW cementation transfer line (Jacket)
Admin	• (SS) Event Response Program (Worker performs appropriate response.) • (Non-SC/SS) [FC] Radiological Protection Program (Monitor of radiological conditions and application of appropriate response)

Credited SSCs and ACs

	Class	Control	Attribute	Affected Receptors
Preventers	SS	HAW Cementation Transfer Line	HAW Cementation Transfer Line Pipe Chase	
		Safety Function:	Protects transfer line from impact.	
Mitigators	SS	Event Response Program	Worker performs appropriate response.	• Rad: WG1, WG2, WG3, MOI; • Chem: WG1, WG2, WG3;
		Safety Function:	Reduces worker exposure and contamination potential	
Notes:	None			
References:	None			

Hazard Evaluation Table - Event HAL-3-002

Description:
HAW solution leaks from transfer line between HAW Process Room and HAW Cementation Process

Locations:	**MAR:**
• WSB	• 45 grams of Am-241 (one HAW cementation head tank volume)

Release Mechanisms:
• Spill

Assumptions:
None

Causes:
• Corrosion / erosion

Unmitigated System Effects:	**Methods of Detection:**
None	• Operator observation • Radiation monitoring
Unmitigated Frequency: A	**Mitigated Frequency:** Prevented

Consequence / Risk Rank

Receptor	Rad				Chem				Phy			
	Unmit.		PHR Mit.		Unmit.		PHR Mit.		Unmit.		PHR Mit.	
WG1	H	A1			N	C			N	C		
WG2	H	A1			N	C			N	C		
WG3	L	B			N	C						
MOI	N	C			N	C						

Preventive Features:	
Engineered	• (SS) HAW cementation transfer line (Core pipe)
Admin	• (Non-SC/SS) [FC] Configuration Management Program (Verification that alterations comply with WSB safety basis) • (SS) Structural Integrity Program (HAW cementation transfer line jacket inspections and requirements)
Mitigative Features:	
Engineered	• (Non-SC/SS) [FC] Building ventilation system w/HEPA (Containment) • (SS) HAW cementation transfer line (Jacket) • (Non-SC/SS) [FC] Pipe (Isolated of Material at Sending End)
Admin	• (SS) Event Response Program (Worker performs appropriate response.) • (Non-SC/SS) [FC] Pipe Jacket Surveillance and Testing Program (Pipe Jacket Integrity Verification) • (SS) Radiological Protection Program (Monitor of radiological conditions and application of appropriate response)

Credited SSCs and ACs

	Class	Control	Attribute	Affected Receptors
Preventers	SS	HAW cementation transfer line	Core pipe	
		Safety Function:	Contains HAW material.	
	SS	Structural Integrity Program	HAW cementation transfer line jacket inspections and requirements	• Rad: WG1, WG2, WG3, MOI;
		Safety Function:	Ensures that the integrity of the HAW cementation transfer line jacket is maintained	
Mitigators	SS	Event Response Program	Worker performs appropriate response.	• Rad: WG1, WG2, WG3, MOI;
		Safety Function:	Reduces worker exposure and contamination potential	
	SS	HAW cementation transfer line	Jacket	• Rad: WG1, WG2, WG3, MOI;
		Safety Function:	Contains leaks from core pipe and directs them to a collection point.	
	SS	Radiological Protection Program	Monitor of radiological conditions and application of appropriate response	• Rad: WG1, WG2, WG3;
		Safety Function:	Prevents or reduces personnel contamination and radiation exposure	
Notes:	None			
References:	None			

Hazard Evaluation Table - Event HAL-3-003

Description:
Spill of HAW liquid from vessel or piping in HAW Process Rooms

Locations:
- HAW process area

MAR:
- Highest HAW vessel inventory (6 kg Am-241)

Release Mechanisms:
- Spill

Assumptions:
None

Causes:
- Corrosion / erosion
- Crane or monorail load drop
- Inadvertent transfer or overflow
- Maintenance activity
- Operator error
- Over pressure
- Pipe or tank failure

Unmitigated System Effects:
None

Methods of Detection:
- Operator observation
- Radiation monitoring

Unmitigated Frequency: A

Mitigated Frequency: U

Consequence / Risk Rank

Receptor	Rad				Chem				Phy			
	Unmit.		PHR Mit.		Unmit.		PHR Mit.		Unmit.		PHR Mit.	
WG1	H	A1	M	B1	M	B1	L	B	N	C	N	C
WG2	H	A1	L	B	M	B1	N	C	N	C	N	C
WG3	M	B1	N	C	L	B	N	C				
MOI	N	C	N	C	N	C	N	C				

Preventive Features:

Engineered	• (SS) HAW process piping, valves and vessels (Overflow lines on HAW vessels connected to overflow tank) • (Non-SC/SS) [FC] High level indication and alarm (High level indication and notification) • (Non-SC/SS) [FC] {IC} Process lines (Vented)
Admin	• (Non-SC/SS) [FC] Hoisting and Rigging Program (Identification of appropriate rigging and hoisting equipment, proper use of rigging and hoisting equipment) • (Non-SC/SS) [FC] Operator training & procedures (Material transfer procedures)

Mitigative Features:

Engineered	• (Non-SC/SS) [FC] Building ventilation system w/HEPA (Containment) • (SS) Diesel Generator (Secondary Electric Power Supply) • (SS) HAW area design and construction (Walls and stainless steel liners) • (SS) HAW process room ventilation system (Filtration of hazardous material) • (Non-SC/SS) [FC] Sump high level alarm (Leak notification)
Admin	• (SS) Event Response Program (Worker performs appropriate response.) • (SS) Radiological Protection Program (Monitor of radiological conditions and application of appropriate response)

Credited SSCs and ACs

	Class	Control	Attribute	Affected Receptors
Preventers	SS	HAW process piping, valves and vessels	Overflow lines on HAW vessels connected to overflow tank	
		Safety Function:	Contains spills	
Mitigators	SS	Diesel Generator	Secondary Electric Power Supply	• Rad: WG2, WG3; • Chem: WG2, WG3;
		Safety Function:	Provide electric power to active Safety Significant controls when sufficient power is not available from the primary electric power supply.	
	SS	Event Response Program	Worker performs appropriate response.	• Rad: WG1, WG2, WG3; • Chem: WG1, WG2, WG3;
		Safety Function:	Reduces worker exposure and contamination potential	
	SS	HAW area design and construction	Walls and stainless steel liners	• Rad: WG1, WG2, WG3; • Chem: WG1, WG2, WG3;
		Safety Function:	Limits consequences to facility worker from spills by containing spills to the immediate area.	
	SS	HAW process room ventilation system	Filtration of hazardous material	• Rad: WG2, WG3; • Chem: WG2, WG3;
		Safety Function:	Provides filtration of any hazardous material that is released in the process rooms.	
	SS	Radiological Protection Program	Monitor of radiological conditions and application of appropriate response	• Rad: WG1, WG2, WG3;
		Safety Function:	Prevents or reduces personnel contamination and radiation exposure	
Notes:	None			
References:	None			

Hazard Evaluation Table - Event HAL-3-003a

Description:
Spill of HAW liquid from a pipe break in HAW Process Rooms

Locations:
- HAW process area

MAR:
- Highest HAW vessel inventory (6 kg Am-241)

Release Mechanisms:
- Spill

Assumptions:
- Facility is assumed to have less than 850 feet of elevated HAW piping.
- Spill is assumed to be from a height of thirty feet.

Causes:
- Corrosion / erosion
- Maintenance activity
- Operator error
- Over pressure

Unmitigated System Effects:
None

Methods of Detection:
- Operator observation
- Radiation monitoring

Unmitigated Frequency: U

Mitigated Frequency: EU

Consequence / Risk Rank

Receptor	Rad				Chem				Phy			
	Unmit.		PHR Mit.		Unmit.		PHR Mit.		Unmit.		PHR Mit.	
WG1	H	A1	M	B1	M	B1	L	B	N	C	N	C
WG2	H	A1	L	B	M	B1	N	C	N	C	N	C
WG3	H	A1	L	B	L	B	N	C				
MOI	M	B1	N	C	N	C	N	C				

Preventive Features:

Engineered	• (SS) HAW process piping, valves and vessels (Overflow lines on HAW vessels connected to overflow tank) • (Non-SC/SS) High level indication and alarm (High level indication and notification) • (Non-SC/SS) {IC} Process lines (Vented)
Admin	• (Non-SC/SS) Hoisting and Rigging Program (Identification of appropriate rigging and hoisting equipment, proper use of rigging and hoisting equipment) • (Non-SC/SS) Operator training & procedures (Material transfer procedures)

Mitigative Features:

Engineered	• (Non-SC/SS) Building ventilation system w/HEPA (Containment) • (SS) Diesel Generator (Secondary Electric Power Supply) • (SS) HAW area design and construction (Walls and stainless steel liners) • (SS) HAW process room ventilation system (Filtration of hazardous material) • (Non-SC/SS) Sump high level alarm (Leak notification)
Admin	• (SS) Event Response Program (Worker performs appropriate response.) • (SS) Radiological Protection Program (Monitor of radiological conditions and application of appropriate response)

Credited SSCs and ACs

	Class	Control	Attribute	Affected Receptors
Preventers	SS	HAW process piping, valves and vessels	Overflow lines on HAW vessels connected to overflow tank	
		Safety Function:	Contains spills	
Mitigators	SS	Diesel Generator	Secondary Electric Power Supply	• Rad: WG2, WG3, MOI; • Chem: WG2, WG3;
		Safety Function:	Provide electric power to active Safety Significant controls when sufficient power is not available from the primary electric power supply.	
	SS	Event Response Program	Worker performs appropriate response.	• Rad: WG1, WG2, WG3, MOI; • Chem: WG1, WG2, WG3;
		Safety Function:	Reduces worker exposure and contamination potential	
	SS	HAW area design and construction	Walls and stainless steel liners	• Rad: WG1, WG2, WG3, MOI; • Chem: WG1, WG2, WG3;
		Safety Function:	Limits consequences to facility worker from spills by containing spills to the immediate area.	
	SS	HAW process room ventilation system	Filtration of hazardous material	• Rad: WG2, WG3, MOI; • Chem: WG2, WG3;
		Safety Function:	Provides filtration of any hazardous material that is released in the process rooms.	
	SS	Radiological Protection Program	Monitor of radiological conditions and application of appropriate response	• Rad: WG1, WG2, WG3, MOI;
		Safety Function:	Prevents or reduces personnel contamination and radiation exposure	
Notes:	• From Reference 34, 850 feet of piping would have a mean leakage rate of 1.0 E -10 /(hr ft) x 850 ft = 8.5 E-8 / hr or 7.5 E-4 / yr.			
References:	None			

Hazard Evaluation Table - Event HAL-3-003b

Description:
Spill of HAW liquid from a pipe leak in HAW Process Rooms

Locations:
- HAW process area

MAR:
- Leak in pipe or pipe connection

Release Mechanisms:
- Spill

Assumptions:
- Facility is assumed to have less than 850 feet of elevated HAW piping.
- Spill is assumed to be from a height of thirty feet.

Causes:
- Corrosion / erosion
- Maintenance activity
- Operator error
- Over pressure

Unmitigated System Effects:
None

Methods of Detection:
- Operator observation
- Radiation monitoring

Unmitigated Frequency: A

Mitigated Frequency: U

Consequence / Risk Rank

Receptor	Rad				Chem				Phy			
	Unmit.		PHR Mit.		Unmit.		PHR Mit.		Unmit.		PHR Mit.	
WG1	H	A1	M	B1	L	B	N	C	N	C	N	C
WG2	H	A1	L	B	L	B	N	C	N	C	N	C
WG3	L	B	N	C	N	C	N	C				
MOI	N	C	N	C	N	C	N	C				

Preventive Features:

Engineered	• (SS) HAW process piping, valves and vessels (Overflow lines on HAW vessels connected to overflow tank) • (Non-SC/SS) High level indication and alarm (High level indication and notification) • (Non-SC/SS) {IC} Process lines (Vented)
Admin	• (Non-SC/SS) Hoisting and Rigging Program (Identification of appropriate rigging and hoisting equipment, proper use of rigging and hoisting equipment) • (Non-SC/SS) Operator training & procedures (Material transfer procedures)

Mitigative Features:

Engineered	• (Non-SC/SS) Building ventilation system w/HEPA (Containment) • (SS) Diesel Generator (Secondary Electric Power Supply) • (SS) HAW area design and construction (Walls and stainless steel liners) • (SS) HAW process room ventilation system (Filtration of hazardous material) • (Non-SC/SS) Sump high level alarm (Leak notification)
Admin	• (SS) Event Response Program (Worker performs appropriate response.) • (SS) Radiological Protection Program (Monitor of radiological conditions and application of appropriate response)

Credited SSCs and ACs

	Class	Control	Attribute	Affected Receptors
Preventers	SS	HAW process piping, valves and vessels	Overflow lines on HAW vessels connected to overflow tank	
		Safety Function:	Contains spills	
Mitigators	SS	Diesel Generator	Secondary Electric Power Supply	• Rad: WG2, WG3, MOI; • Chem: WG2;
		Safety Function:	Provide electric power to active Safety Significant controls when sufficient power is not available from the primary electric power supply.	
	SS	Event Response Program	Worker performs appropriate response.	• Rad: WG1, WG2, WG3, MOI; • Chem: WG1, WG2;
		Safety Function:	Reduces worker exposure and contamination potential	
	SS	HAW area design and construction	Walls and stainless steel liners	• Rad: WG1, WG2, WG3, MOI; • Chem: WG1, WG2;
		Safety Function:	Limits consequences to facility worker from spills by containing spills to the immediate area.	
	SS	HAW process room ventilation system	Filtration of hazardous material	• Rad: WG2, WG3, MOI; • Chem: WG2;
		Safety Function:	Provides filtration of any hazardous material that is released in the process rooms.	
	SS	Radiological Protection Program	Monitor of radiological conditions and application of appropriate response	• Rad: WG1, WG2, WG3, MOI;
		Safety Function:	Prevents or reduces personnel contamination and radiation exposure	
Notes:	• From Reference 34, 850 feet of piping would have a mean leakage rate of 3.0 E -9 /(hr ft) x 850 ft = 2.6 E-6 / hr or 0.022 / yr. • From Reference 34, 850 feet of piping would have a mean leakage rate of 3.3 E -9 /(hr ft) x 850 ft = 2.8 E-6 / hr or 0.025 / yr.			
References:	None			

Hazard Evaluation Table - Event HAL-3-004

Description:
Too much HAW liquid waste is received, overflowing receipt tank and resulting in spill of HAW liquid

Locations:
- HAW Receipt Tanks

MAR:
- Highest HAW vessel inventory (6 kg Am-241)

Release Mechanisms:
- Spill

Assumptions:
None

Causes:
- Failed liquid level indicator
- Failure of pump control
- Operator error
- Receipt tank full
- Receive unexpected transfer from receiving facility
- Sent to wrong receipt tank

Unmitigated System Effects:
None

Methods of Detection:
- Level indication instrumentation
- Operator observation
- Radiation monitoring

Unmitigated Frequency: A

Mitigated Frequency: U

Consequence / Risk Rank

Receptor	Rad				Chem				Phy			
	Unmit.		PHR Mit.		Unmit.		PHR Mit.		Unmit.		PHR Mit.	
WG1	H	A1	M	B1	M	B1	L	B	N	C	N	C
WG2	H	A1	L	B	M	B1	N	C	N	C	N	C
WG3	M	B1	N	C	L	B	N	C				
MOI	N	C	N	C	N	C	N	C				

Preventive Features:

Engineered	• (SS) HAW process piping, valves and vessels (Overflow lines on HAW vessels connected to overflow tank) • (Non-SC/SS) [FC] High level indication and alarm (High level indication and notification) • (Non-SC/SS) [FC] Transfer Pump Kill Switch (Connected to Sending Facility Pump and Activate by Receipt Tank High Level Interlock) • (Non-SC/SS) [FC] Valves remain in closed position when not receiving waste. (Prevents the receipt of an unanticipated transfer)
Admin	• (Non-SC/SS) [FC] Operator training & procedures (Material transfer procedures) • (Non-SC/SS) [FC] Transfer Control Program (Verification)

Mitigative Features:

Engineered	• (Non-SC/SS) [FC] Building ventilation system w/HEPA (Containment) • (SS) Diesel Generator (Secondary Electric Power Supply) • (SS) HAW area design and construction (Walls and stainless steel liners) • (SS) HAW process room ventilation system (Filtration of hazardous material) • (Non-SC/SS) [FC] Sump high level alarm (Leak notification)
Admin	• (SS) Event Response Program (Worker performs appropriate response.) • (SS) Radiological Protection Program (Monitor of radiological conditions and application of appropriate response)

Credited SSCs and ACs

	Class	Control	Attribute	Affected Receptors
Preventers	SS	HAW process piping, valves and vessels	Overflow lines on HAW vessels connected to overflow tank	
		Safety Function:	Contains spills	
Mitigators	SS	Diesel Generator	Secondary Electric Power Supply	• Rad: WG2, WG3; • Chem: WG2, WG3;
		Safety Function:	Provide electric power to active Safety Significant controls when sufficient power is not available from the primary electric power supply.	
	SS	Event Response Program	Worker performs appropriate response.	• Rad: WG1, WG2, WG3; • Chem: WG1, WG2, WG3;
		Safety Function:	Reduces worker exposure and contamination potential	
	SS	HAW area design and construction	Walls and stainless steel liners	• Rad: WG1, WG2, WG3; • Chem: WG1, WG2, WG3;
		Safety Function:	Limits consequences to facility worker from spills by containing spills to the immediate area.	
	SS	HAW process room ventilation system	Filtration of hazardous material	• Rad: WG2, WG3; • Chem: WG2, WG3;
		Safety Function:	Provides filtration of any hazardous material that is released in the process rooms.	
	SS	Radiological Protection Program	Monitor of radiological conditions and application of appropriate response	• Rad: WG1, WG2, WG3;
		Safety Function:	Prevents or reduces personnel contamination and radiation exposure	
Notes:	None			

References:	None

Hazard Evaluation Table - Event HAL-3-005

Description:
Leak from HAW Evaporator results in spill of HAW liquid in HAW Process Rooms

Locations:
- HAW process area

MAR:
- Highest HAW vessel inventory (6 kg Am-241)

Release Mechanisms:
- Spill

Assumptions:
None

Causes:
- Control System Failure
- Corrosion/erosion
- Operator error
- Overflow with feed
- Plugged bottoms line

Unmitigated System Effects:
None

Methods of Detection:
- Level indication instrumentation
- Operator observation
- Radiation monitoring

Unmitigated Frequency: A

Mitigated Frequency: A

Consequence / Risk Rank

Receptor	Rad				Chem				Phy			
	Unmit.		PHR Mit.		Unmit.		PHR Mit.		Unmit.		PHR Mit.	
WG1	H	A1	M	B1	M	B1	L	B	N	C	N	C
WG2	H	A1	L	B	M	B1	N	C	N	C	N	C
WG3	M	B1	N	C	L	B	N	C				
MOI	N	C	N	C	N	C	N	C				

Preventive Features:

Engineered	• (Non-SC/SS) [FC] Condensate Hold Tank (Evaporator overflows to the Condensate Hold Tank.) • (Non-SC/SS) Evaporator Feed System (All evaporator feed is from the HAW Head Tank.) • (Non-SC/SS) [FC] High Liquid Level Alarm Interlocked to Transfer Kill Switch (Operator Notification and Interuption of Transfer)
Admin	• (Non-SC/SS) [FC] Operator training & procedures (Evaporator operation) • (Non-SC/SS) [FC] {IC} Process lines (Vented) • (Non-SC/SS) [FC] Structural Integrity Program (HAW Vessels Inspections and Requirements)

Mitigative Features:

Engineered	• (Non-SC/SS) [FC] Building ventilation system w/HEPA (Containment) • (SS) Diesel Generator (Secondary Electric Power Supply) • (SS) HAW area design and construction (Walls and stainless steel liners) • (SS) HAW process room ventilation system (Filtration of hazardous material) • (Non-SC/SS) [FC] Sump high level alarm (Leak notification)
Admin	• (SS) Event Response Program (Worker performs appropriate response.) • (SS) Radiological Protection Program (Monitor of radiological conditions and application of appropriate response)

Credited SSCs and ACs

	Class	Control	Attribute	Affected Receptors
Preventers	None			
Mitigators	SS	Diesel Generator	Secondary Electric Power Supply	• Rad: WG2, WG3; • Chem: WG2, WG3;
		Safety Function:	Provide electric power to active Safety Significant controls when sufficient power is not available from the primary electric power supply.	
	SS	Event Response Program	Worker performs appropriate response.	• Rad: WG1, WG2, WG3; • Chem: WG1, WG2, WG3;
		Safety Function:	Reduces worker exposure and contamination potential	
	SS	HAW area design and construction	Walls and stainless steel liners	• Rad: WG1, WG2, WG3; • Chem: WG1, WG2, WG3;
		Safety Function:	Limits consequences to facility worker from spills by containing spills to the immediate area.	
	SS	HAW process room ventilation system	Filtration of hazardous material	• Rad: WG2, WG3; • Chem: WG2, WG3;
		Safety Function:	Provides filtration of any hazardous material that is released in the process rooms.	
	SS	Radiological Protection Program	Monitor of radiological conditions and application of appropriate response	• Rad: WG1, WG2, WG3;
		Safety Function:	Prevents or reduces personnel contamination and radiation exposure	
Notes:	None			
References:	None			

Hazard Evaluation Table - Event HAL-3-006

Description:
Spill of HAW solution from sampling lines on HAW Process Room side of wall due a break in return line during sampling activity

Locations:
- HAW processing area

MAR:
- 5 gph HAW solution for a period of 24 hours = 120 gallons

Release Mechanisms:
- Spill

Assumptions:
None

Causes:
- Corrosion / erosion
- Crane or monorail load drop
- Maintenance activity
- Operator error
- Over pressure

Unmitigated System Effects:
None

Methods of Detection:
- Radiation monitoring

Unmitigated Frequency: A

Mitigated Frequency: A

Consequence / Risk Rank

Receptor	Rad				Chem				Phy			
	Unmit.		PHR Mit.		Unmit.		PHR Mit.		Unmit.		PHR Mit.	
WG1	H	A1	M	B1	L	B	N	C	N	C	N	C
WG2	H	A1	M	B1	L	B	N	C	N	C	N	C
WG3	L	B	N	C	N	C	N	C				
MOI	N	C	N	C	N	C	N	C				

Preventive Features:

Engineered	None
Admin	• (Non-SC/SS) [FC] Hoisting and Rigging Program (Identification of appropriate rigging and hoisting equipment, proper use of rigging and hoisting equipment) • (Non-SC/SS) [FC] Operator training & procedures (Sample collection and handling)

Mitigative Features:

Engineered	• (Non-SC/SS) [FC] Building ventilation system w/HEPA (Containment) • (SS) Diesel Generator (Secondary Electric Power Supply) • (SS) HAW area design and construction (Walls and stainless steel liners) • (SS) HAW process room ventilation system (Filtration of hazardous material) • (SS) HAW Sample Lines (Jacket)
Admin	• (SS) Event Response Program (Worker performs appropriate response.) • (SS) Radiological Protection Program (Monitor of radiological conditions and application of appropriate response)

Credited SSCs and ACs

	Class	Control	Attribute	Affected Receptors
Preventers	None			
Mitigators	SS	Diesel Generator	Secondary Electric Power Supply	• Rad: WG3;
		Safety Function:	Provide electric power to active Safety Significant controls when sufficient power is not available from the primary electric power supply.	
	SS	Event Response Program	Worker performs appropriate response.	• Rad: WG1, WG2; • Chem: WG1, WG2;
		Safety Function:	Reduces worker exposure and contamination potential	
	SS	HAW area design and construction	Walls and stainless steel liners	• Rad: WG1, WG2; • Chem: WG1, WG2;
		Safety Function:	Limits consequences to facility worker from spills by containing spills to the immediate area.	
	SS	HAW process room ventilation system	Filtration of hazardous material	• Rad: WG3;
		Safety Function:	Provides filtration of any hazardous material that is released in the process rooms.	
	SS	HAW Sample Lines	Jacket	• Rad: WG1, WG2; • Chem: WG1, WG2;
		Safety Function:	Contains leaks and directs them back to HAW process room.	
	SS	Radiological Protection Program	Monitor of radiological conditions and application of appropriate response	• Rad: WG1, WG2;
		Safety Function:	Prevents or reduces personnel contamination and radiation exposure	
Notes:	• Leak is anticipated to be slow (~ 1 to 5 gph) • Samples are pumped via air jets. A break in a line should stop the flow of liquid.			
References:	None			

Hazard Evaluation Table - Event HAL-3-007

Description:
Spill of HAW solution at sample GB from lines.

Locations:
- On HAW Sample GB side of HAW process room wall

MAR:
- 5 gph HAW solution for a period of 24 hours = 120 gallons

Release Mechanisms:
- Spill

Assumptions:
None

Causes:
- Corrosion / erosion
- Maintenance activity
- Operator error
- Over pressure

Unmitigated System Effects:
None

Methods of Detection:
- Radiation monitoring

Unmitigated Frequency: A

Mitigated Frequency: A

Consequence / Risk Rank

Receptor	Rad				Chem				Phy			
	Unmit.		PHR Mit.		Unmit.		PHR Mit.		Unmit.		PHR Mit.	
WG1	H	A1	L	B	L	B	N	C	N	C	N	C
WG2	H	A1	L	B	L	B	N	C	N	C	N	C
WG3	L	B	L	B	N	C	N	C				
MOI	N	C	N	C	N	C	N	C				

Preventive Features:	
Engineered	None
Admin	• (Non-SC/SS) [FC] Operator training & procedures (Sample collection and handling)
Mitigative Features:	
Engineered	• (Non-SC/SS) [FC] Building ventilation system w/HEPA (Containment) • (Non-SC/SS) [FC] Floor Drain from Sample Room to Process Room Sump (Containment) • (SS) HAW Sample Lines (Jacketed HAW Sample Lines)
Admin	• (SS) Event Response Program (Worker performs appropriate response.) • (SS) Radiological Protection Program (Monitor of radiological conditions and application of appropriate response)

Credited SSCs and ACs

	Class	Control	Attribute	Affected Receptors
Preventers	None			
Mitigators	SS	Event Response Program	Worker performs appropriate response.	• Rad: WG1, WG2; • Chem: WG1, WG2;
		Safety Function:	Reduces worker exposure and contamination potential	
	SS	HAW Sample Lines	Jacketed HAW Sample Lines	• Rad: WG1, WG2; • Chem: WG1, WG2;
		Safety Function:	Directs leaks back to HAW process room	
	SS	Radiological Protection Program	Monitor of radiological conditions and application of appropriate response	• Rad: WG1, WG2;
		Safety Function:	Prevents or reduces personnel contamination and radiation exposure	
Notes:	None			
References:	None			

Hazard Evaluation Table - Event HAL-3-008

Description:
Spill of HAW liquid inside sample GB

Locations:
- Inside HAW Sample GB

MAR:
- 5 gph HAW solution for a period of 24 hours = 120 gallons

Release Mechanisms:
- Spill

Assumptions:
None

Causes:
- Corrosion / erosion
- Drop sample container
- Maintenance activity
- Operator error
- Sample line break inside GB

Unmitigated System Effects:
None

Methods of Detection:
- Radiation monitoring

Unmitigated Frequency: A

Mitigated Frequency: A

Consequence / Risk Rank

Receptor	Rad				Chem				Phy			
	Unmit.		PHR Mit.		Unmit.		PHR Mit.		Unmit.		PHR Mit.	
WG1	H	A1	L	B	L	B	N	C	N	C	N	C
WG2	H	A1	L	B	L	B	N	C	N	C	N	C
WG3	L	B	L	B	N	C	N	C				
MOI	N	C	N	C	N	C	N	C				

Preventive Features:

Engineered	None
Admin	• (Non-SC/SS) [FC] Operator training & procedures (Sample collection and handling)

Mitigative Features:

Engineered	• (Non-SC/SS) [FC] Building ventilation system w/HEPA (Containment) • (SS) HAW Sample Glovebox (Containment of Hazardous Material Spills) • (SS) HAW Sample Glovebox Ventilation (Filtration of Hazardous Material) • (Non-SC/SS) [FC] Sample Glovebox Drain to Acid Overflow Tank (Containment)
Admin	• (SS) Event Response Program (Worker performs appropriate response.) • (SS) Radiological Protection Program (Monitor of radiological conditions and application of appropriate response)

Credited SSCs and ACs

	Class	Control	Attribute	Affected Receptors
Preventers	None			
Mitigators	SS	Event Response Program	Worker performs appropriate response.	• Rad: WG1, WG2; • Chem: WG1, WG2;
		Safety Function:	Reduces worker exposure and contamination potential	
	SS	HAW Sample Glovebox	Containment of Hazardous Material Spills	• Rad: WG1, WG2;
		Safety Function:	Prevents hazardous liquid from contacting the facility worker.	
	SS	HAW Sample Glovebox Ventilation	Filtration of Hazardous Material	• Rad: WG1, WG2; • Chem: WG1, WG2;
		Safety Function:	Provides filtration of airborne hazardous material	
	SS	Radiological Protection Program	Monitor of radiological conditions and application of appropriate response	• Rad: WG1, WG2;
		Safety Function:	Prevents or reduces personnel contamination and radiation exposure	
Notes:	• GB may overflow over time, should the sample line continue running, but operator would have sufficient time to respond.			
References:	None			

Hazard Evaluation Table - Event HAL-3-009

Description:
HAW Evaporator steam coil leak (HAW solution) results in HAW solution in steam system external to process rooms.

Locations:	**MAR:**
• HAW Steam Loop	• 3,440 Curies of Am-241 (less than 1 kg Am-241)

Release Mechanisms:
• Contamination of Support System

Assumptions:
None

Causes:
• Corrosion or failure of coils AND loss of pressure on coils

Unmitigated System Effects:	**Methods of Detection:**
None	• Loss of steam coil pressure • Radiation monitoring
Unmitigated Frequency: A	**Mitigated Frequency:** Prevented

Consequence / Risk Rank

Receptor	Rad				Chem				Phy			
	Unmit.		PHR Mit.		Unmit.		PHR Mit.		Unmit.		PHR Mit.	
WG1	H	A1			L	B			N	C		
WG2	H	A1			L	B			N	C		
WG3	M	B1			N	C						
MOI	L	B			N	C						

Preventive Features:

Engineered	• (Non-SC/SS) [FC] Cash regulator including backup supply (Maintains instrument air pressure on steam coils at all times)
Admin	• (Non-SC/SS) [FC] Evaporator steam coils integrity protection (Chemistry control of steam) • (SS) Evaporator steam coils integrity protection (Chemistry control of steam) • (SS) Evaporator Steam Coils Integrity Protection (Prior to each evaporator run, the integrity of the coils will be verified.) • (Non-SC/SS) [FC] Maintenance procedures (Manintenance and inspection of steam coils)

Mitigative Features:

Engineered	• (Non-SC/SS) [FC] Detection of radioactive contaminant in condensate system (Detection and notification of condensate system contamination) • (Non-SC/SS) [FC] Steam system (Recirculation system)
Admin	• (Non-SC/SS) [FC] Event Response Program (Worker performs appropriate response.) • (Non-SC/SS) [FC] Radiological Protection Program (Area postings)

Credited SSCs and ACs

	Class	Control	Attribute	Affected Receptors
Preventers	SS	Evaporator steam coils integrity protection	Chemistry control of steam	
		Safety Function:	Prevents radioactive solution from contaminating clean side of evaporator steam coil by reducing corrosion.	
	SS	Evaporator Steam Coils Integrity Protection	Prior to each evaporator run, the integrity of the coils will be verified.	
		Safety Function:	Identification of Inadequate Coil Integrity prior to Evaporation	
Mitigators	None			
Notes:	• Event results in contaminated steam system and release via steam blow-off			
References:	None			

Hazard Evaluation Table - Event HAL-3-010

Description:
Leak of HAW Bottoms to cooling coils on Bottoms Heat Exchanger

Locations:
- HAW line

MAR:
- 3,440 Curies of Am-241 (~15-20 gallons of bottoms (equivalent to one coil volume) less than 1 kg Am-241)

Release Mechanisms:
- Loss of steam coil structural integrity

Assumptions:
None

Causes:
- Corrosion or failure of cooling coils

Unmitigated System Effects:
None

Methods of Detection:
- Radiation monitoring

Unmitigated Frequency: A

Mitigated Frequency: U

Consequence / Risk Rank

Receptor	Rad				Chem				Phy			
	Unmit.		PHR Mit.		Unmit.		PHR Mit.		Unmit.		PHR Mit.	
WG1	L	B	L	B	L	B	L	B	N	C	N	C
WG2	L	B	L	B	L	B	L	B	N	C	N	C
WG3	N	C	N	C	N	C	N	C				
MOI	N	C	N	C	N	C	N	C				

Preventive Features:

Engineered	• (SS) {IC} Cooling coil designs (Cooling coil integrity)
Admin	• (Non-SC/SS) [FC] Chemistry control of cooling water (Reduction of cooling coil corrosion)

Mitigative Features:

Engineered	None
Admin	• (Non-SC/SS) Radiological Protection Program (Monitor of radiological conditions and application of appropriate response)

Credited SSCs and ACs

	Class	Control	Attribute	Affected Receptors
Preventers	SS	Cooling coil designs	Cooling coil integrity	
		Safety Function:	Prevents radioactive solution from contaminating cooling water	
Mitigators	None			
Notes:	• Initial Condition: Cooling coil utilizes three independent loops between the evaporator and chiller. Therefore, it is not credible to release radiological material from system. • Radiological consequences are due to worker unknowingly performing maintenance on a contaminated loop.			
References:	None			

Hazard Evaluation Table - Event HAL-3-011

Description:
Pressurization of HAW Evaporator Vessel results in the release of HAW material

Locations:
- HAW line

MAR:
- Evaporator contents (a portion of the material may be spilled through seals and/or connections)

Release Mechanisms:
- Spill

Assumptions:
None

Causes:
- Blocked condensate line
- Closed valve
- Condensate hold tanks pressurized or not vented
- Demister plugged
- Operator error
- Plugged vents
- Steam leak

Unmitigated System Effects:
None

Methods of Detection:
- Radiation monitoring

Unmitigated Frequency: A

Mitigated Frequency: A

Consequence / Risk Rank

Receptor	Rad				Chem				Phy			
	Unmit.		PHR Mit.		Unmit.		PHR Mit.		Unmit.		PHR Mit.	
WG1	H	A1	N	C	M	B1	N	C	M	B1	N	C
WG2	H	A1	N	C	M	B1	N	C	M	B1	N	C
WG3	M	B1	N	C	L	B	N	C				
MOI	N	C	N	C	N	C	N	C				

Preventive Features:

Engineered	• (Non-SC/SS) [FC] Steam system (Steam regulated to below 25 psig)
Admin	• (Non-SC/SS) [FC] Evaporator steam coils integrity protection (Chemistry control of steam) • (Non-SC/SS) [FC] Operator training & procedures (Evaporator operation) • (Non-SC/SS) [FC] {IC} Process lines (Vented)

Mitigative Features:

Engineered	• (SS) Diesel Generator (Secondary Electric Power Supply) • (SS) HAW area design and construction (Walls and stainless steel liners) • (SS) HAW process room ventilation system (Filtration of hazardous material)
Admin	• (SS) Event Response Program (Worker performs appropriate response.) • (SS) Radiological Protection Program (Monitor of radiological conditions and application of appropriate response)

Credited SSCs and ACs

	Class	Control	Attribute	Affected Receptors
Preventers	None			
Mitigators	SS	Diesel Generator	Secondary Electric Power Supply	• Rad: WG1, WG2, WG3, MOI; • Chem: WG1, WG2, WG3; • Phy: WG1, WG2;
		Safety Function:	Provide electric power to active Safety Significant controls when sufficient power is not available from the primary electric power supply.	
	SS	Event Response Program	Worker performs appropriate response.	• Rad: WG1, WG2, WG3, MOI; • Chem: WG1, WG2, WG3; • Phy: WG1, WG2;
		Safety Function:	Reduces worker exposure and contamination potential	
	SS	HAW area design and construction	Walls and stainless steel liners	• Rad: WG1, WG2, WG3, MOI; • Chem: WG1, WG2, WG3; • Phy: WG1, WG2;
		Safety Function:	Limits consequences to facility worker from spills by containing spills to the immediate area.	
	SS	HAW process room ventilation system	Filtration of hazardous material	• Rad: WG1, WG2, WG3, MOI; • Chem: WG1, WG2, WG3; • Phy: WG1, WG2;
		Safety Function:	Provides filtration of any hazardous material that is released in the process rooms.	
	SS	Radiological Protection Program	Monitor of radiological conditions and application of appropriate response	• Rad: WG1, WG2, WG3, MOI; • Phy: WG1, WG2;
		Safety Function:	Prevents or reduces personnel contamination and radiation exposure	

Notes:	• Physical injury is due to scalding or acid burns.
References:	None

Hazard Evaluation Table - Event HAL-4-001

Description:
Internal uptake of HAW solution from needle puncture during GB sampling or during maintenance (e.g., changing of needles)

Locations:	**MAR:**
• HAW Sampling GB	• Small Amount of HAW Liquid (1 Liter of HAW Liquid or 2 gram of Am-241)

Release Mechanisms:
• Puncture with contaminated needle from sample syringe.

Assumptions:
None

Causes:
• Operator error

Unmitigated System Effects:	**Methods of Detection:**
None	• Operator observation • Radiation monitoring
Unmitigated Frequency: A	**Mitigated Frequency:** Prevented

Consequence / Risk Rank

Receptor	Rad				Chem				Phy			
	Unmit.		PHR Mit.		Unmit.		PHR Mit.		Unmit.		PHR Mit.	
WG1	H	A1			N	C			L	B		
WG2	N	C			N	C						
WG3	N	C			N	C						
MOI	N	C			N	C						

Preventive Features:

Engineered	• (SS) Radiological Protection Program (Specifications on proper methods and equipment for use and maintenance of sample needles)
Admin	None

Mitigative Features:

Engineered	None
Admin	• (Non-SC/SS) [FC] Event Response Program (Worker performs appropriate response.) • (Non-SC/SS) [FC] Radiological Protection Program (Monitor of radiological conditions and application of appropriate response)

Credited SSCs and ACs

	Class	Control	Attribute	Affected Receptors
Preventers	SS	Radiological Protection Program	Specifications on proper methods and equipment for use and maintenance of sample needles	
		Safety Function:	Prevents sample needle from contacting hand	
Mitigators	None			
Notes:	None			
References:	None			

Laboratory Events

Hazard Evaluation Table - Event LAB-2-001

Description:
An explosion occurs in Actinide Module of the WSB, resulting in a fire that involves the TRU waste container and resulting in a radiological release

Locations:
- Actinide Module of the WSB Laboratory

MAR:
- Laboratory inventory (1 liter HAW solution and 1 TRU waste container)

Release Mechanisms:
- Aerosolization due to explosion.
- Boiling liquid release.

Assumptions:
None

Causes:
- Ethanol or methanol (used in density measurements) ignited by ignition source.
- Operator error (propane tank valve left open) AND Ignition source (e.g., electrical, analytical equipment, thermal, friction)
- Propane tank or tank line damaged

Unmitigated System Effects:
None

Methods of Detection:
- Fire detection and control room alarm.
- Operator observation
- Radiation monitoring

Unmitigated Frequency: A

Mitigated Frequency: A

Consequence / Risk Rank

Receptor	Rad				Chem				Phy			
	Unmit.		PHR Mit.		Unmit.		PHR Mit.		Unmit.		PHR Mit.	
WG1	M	B1	L	B	N	C	N	C	H	A1	M	B1
WG2	M	B1	L	B	N	C	N	C	H	A1	M	B1
WG3	N	C	N	C	N	C	N	C				
MOI	N	C	N	C	N	C	N	C				

Preventive Features:

Engineered	• (Non-SC/SS) [FC] Building ventilation system (Dilution air supply and negative pressure) • (Non-SC/SS) [FC] Gas cylinder storage (NFPA code compliance) • (Non-SC/SS) [FC] Hood Exhaust (Air Flow) • (Non-SC/SS) [FC] ICP MS (Flame is contained within the equipment.)
Admin	• (Non-SC/SS) [FC] Operator training & procedures (Handling of asphyxiants and flammable gases)

Mitigative Features:

Engineered	• (Non-SC/SS) [FC] Building ventilation system w/HEPA (Containment) • (Non-SC/SS) [FC] Fire Suppression (Extinguishers, Sprinklers) • (Non-SC/SS) WSB Building Structure (Confinement)
Admin	• (Non-SC/SS) [FC] Event Response Program (Worker performs appropriate response.) • (Non-SC/SS) [FC] Event Response Program (Worker performs appropriate response.) • (Non-SC/SS) [FC] No Storage of Samples in Actinide Module (Sample Radionuclide Inventory Prohibited from Actinide Module) • (Non-SC/SS) [FC] Radiological Protection Program (Monitor of radiological conditions and application of appropriate response)

Credited SSCs and ACs

	Class	Control	Attribute	Affected Receptors
Preventers	None			
Mitigators	None			
Notes:	• (life-threatening injury from propane tank debris striking the body) • Standard Industrial Hazard for the physical consequence, protected by the NFPA Code			
References:	None			

Hazard Evaluation Table - Event LAB-3-004

Description:
High Activity samples dropped by operator in the WSB, but outside of the glovebox, resulting in a radiological release

Locations:	**MAR:**
• WSB (but outside glovebox)	• 2 HAW samples (2 each 10 ml samples are 2% of 1 liter of HAW liquid or 0.02 grams of Am-241)

Release Mechanisms:
• Spill

Assumptions:
None

Causes:
• Operator error

Unmitigated System Effects:	**Methods of Detection:**
None	• Operator observation • Radiation monitoring
Unmitigated Frequency: A	**Mitigated Frequency:** Prevented

Consequence / Risk Rank

Receptor	Rad				Chem				Phy			
	Unmit.		PHR Mit.		Unmit.		PHR Mit.		Unmit.		PHR Mit.	
WG1	H	A1			N	C			N	C		
WG2	L	B			N	C			N	C		
WG3	N	C			N	C						
MOI	N	C			N	C						

Preventive Features:	
Engineered	• (Non-SC/SS) Use of dumbwaiter for transfer of HAW samples to lab (Minimize Handling of Samples by Operators)
Admin	• (Non-SC/SS) [FC] {IC} Operator training & procedures (Sample collection and handling) • (Non-SC/SS) [FC] Operator training & procedures (Sample collection and handling) • (SS) Radiological Protection Program (Identification and implementation of appropriate worker protection controls (including PPE and secondary containers) while handling laboratory samples)
Mitigative Features:	
Engineered	• (Non-SC/SS) [FC] Building ventilation system w/HEPA (Containment)
Admin	• (SS) [FC] Radiological Protection Program (Monitor of radiological conditions and application of appropriate response)

Credited SSCs and ACs

	Class	Control	Attribute	Affected Receptors
Preventers	SS	Radiological Protection Program	Identification and implementation of appropriate worker protection controls (including PPE and secondary containers) while handling laboratory samples	
		Safety Function:	Prevents or reduces personnel contamination and radiation exposure during handling laboratory samples	
Mitigators	None			
Notes:	• Radiological consequences to the FW are qualitatively judged to be High, due to the material splashing into the face of the worker handling the sample and the potential uptake.			
References:	None			

Hazard Evaluation Table - Event LAB-3-005

Description:
Spill of High Activity samples in the Laboratory Glovebox, resulting in a radiological release

Locations:	**MAR:**
• Laboratory Glovebox	• Glovebox (1 liter of HAW liquid or 2 gram of Am-241)

Release Mechanisms:
• Spill

Assumptions:
None

Causes:
• Drop sample container
• Maintenance activity
• Operator error

Unmitigated System Effects:	**Methods of Detection:**
None	• Operator observation • Radiation monitoring
Unmitigated Frequency: A	**Mitigated Frequency:** A

Consequence / Risk Rank

Receptor	Rad				Chem				Phy			
	Unmit.		PHR Mit.		Unmit.		PHR Mit.		Unmit.		PHR Mit.	
WG1	H	A1	L	B	N	C	N	C	N	C	N	C
WG2	L	B	N	C	N	C	N	C	N	C	N	C
WG3	N	C	N	C	N	C	N	C				
MOI	N	C	N	C	N	C	N	C				

Preventive Features:	
Engineered	• (Non-SC/SS) Sample Glovebox (Containment) • (Non-SC/SS) [FC] Sample Storage Rack in Glovebox (Retains Sample in Desired Configuration (Prevents Tipping))
Admin	• (Non-SC/SS) Glovebox Housekeeping (Elimination or Reduction of Clutter in Glovebox Workspace) • (Non-SC/SS) [FC] {IC} Operator training & procedures (Sample collection and handling) • (Non-SC/SS) [FC] Operator training & procedures (Sample collection and handling) • (Non-SC/SS) [FC] Work Control Program (Control of maintenance activities)

Mitigative Features:	
Engineered	• (Non-SC/SS) [FC] Building ventilation system w/HEPA (Containment) • (SS) Laboratory Glovebox (Containment) • (SS) Laboratory Glovebox Ventilation System (Filtration of Hazardous Material)
Admin	• (Non-SC/SS) [FC] Event Response Program (Worker performs appropriate response.) • (Non-SC/SS) [FC] Radiological Protection Program (Monitor of radiological conditions and application of appropriate response)

Credited SSCs and ACs

	Class	Control	Attribute	Affected Receptors
Preventers	None			
Mitigators	SS	Laboratory Glovebox	Containment	• Rad: WG1, WG2, WG3, MOI; • Phy: WG1;
		Safety Function:	Prevents hazardous material from contacting worker.	
	SS	Laboratory Glovebox Ventilation System	Filtration of Hazardous Material	• Rad: WG1, WG2, WG3, MOI; • Phy: WG1;
		Safety Function:	Provides filtration of airborne hazardous material	
Notes:	• Radiological consequences to the FW are qualitatively judged to be High, due to the material splashing into the face of the worker handling the sample and the potential uptake.			
References:	None			

Hazard Evaluation Table - Event LAB-4-003

Description:
Radiological contamination uptake, via skin puncture, while handling samples in the WSB Lab

Locations:
- WSB Lab

MAR:
- Radiological Contamination from undiluted HAW solution

Release Mechanisms:
- Puncture with contaminated item.

Assumptions:
None

Causes:
- Broken glass from glass vial being dropped
- Operator error
- Skin puncture or laceration from lab equipment
- Using hands to compress drum of empty vials and lab trash

Unmitigated System Effects:
None

Methods of Detection:
- Operator observation
- Radiation monitoring

Unmitigated Frequency: A

Mitigated Frequency: U

Consequence / Risk Rank

Receptor	Rad				Chem				Phy			
	Unmit.		PHR Mit.		Unmit.		PHR Mit.		Unmit.		PHR Mit.	
WG1	H	A1	M	B1	N	C	N	C	L	B	L	B
WG2	N	C	N	C	N	C	N	C				
WG3	N	C	N	C	N	C	N	C				
MOI	N	C	N	C	N	C	N	C				

Preventive Features:

Engineered	None
Admin	• (Non-SC/SS) [FC] Operator training & procedures (Radiation worker training) • (SS) Radiological Protection Program (Identification and implementation of appropriate worker protection controls (including PPE and secondary containers) while handling laboratory samples)

Mitigative Features:

Engineered	None
Admin	• (Non-SC/SS) [FC] Event Response Program (Worker performs appropriate response.) • (SS) Radiological Protection Program (Monitor of radiological conditions and application of appropriate response)

Credited SSCs and ACs

	Class	Control	Attribute	Affected Receptors
Preventers	SS	Radiological Protection Program	Identification and implementation of appropriate worker protection controls (including PPE and secondary containers) while handling laboratory samples	
		Safety Function:	Prevents or reduces personnel contamination and radiation exposure during handling laboratory samples	
Mitigators	SS	Radiological Protection Program	Monitor of radiological conditions and application of appropriate response	• Rad: WG1;
		Safety Function:	Prevents or reduces personnel contamination and radiation exposure	
Notes:	None			
References:	None			

Hazard Evaluation Table - Event LAB-8-001

Description:
Spill of Liquid Nitrogen in WSB Lab Area

Locations:
- WSB Lab Area or N2 storage area

MAR:
- Two each 160 Liter Dewars plus a 30 Liter Dewar for each detector

Release Mechanisms:
- Spill

Assumptions:
None

Causes:
- Equipment malfunction
- Operator error

Unmitigated System Effects:
None

Methods of Detection:
- Operator observation

Unmitigated Frequency: A

Mitigated Frequency: A

Consequence / Risk Rank

Receptor	Rad				Chem				Phy			
	Unmit.		PHR Mit.		Unmit.		PHR Mit.		Unmit.		PHR Mit.	
WG1					N	C	N	C	H	A1	L	B
WG2					N	C	N	C	H	A1	L	B
WG3					N	C	N	C				
MOI					N	C	N	C				

Preventive Features:

Engineered	• (Non-SC/SS) [FC] Dewar Design (Dewar Integrity)
Admin	• (Non-SC/SS) [FC] Operator training & procedures (Handling of asphyxiants and flammable gases)

Mitigative Features:

Engineered	• (Non-SC/SS) [FC] Building ventilation system (Dilution air supply and negative pressure) • (Non-SC/SS) [FC] Low O2 Alarms (storage location only) (Detection and Notification of Low Oxygen Concentration)
Admin	• (Non-SC/SS) [FC] Event Response Program (Worker performs appropriate response.) • (Non-SC/SS) [FC] Operator Training & Procedures (PPE use)

Credited SSCs and ACs

	Class	Control	Attribute	Affected Receptors
Preventers	None			
Mitigators	None			
Notes:	• Standard Industrial Hazard			
References:	None			

Hazard Evaluation Table - Event LAB-8-002

Description:
Leak of argon gas in Metals Lab Area from argon header in lab

Locations:	**MAR:**
• Metals Lab Area	• Argon storage vessel contents - large quantity of gas

Release Mechanisms:
- Loss of integrity in process gas supply system

Assumptions:
None

Causes:
- Argon line break
- Equipment malfunction
- Operator error

Unmitigated System Effects:	**Methods of Detection:**
None	• Operator observation
Unmitigated Frequency: A	**Mitigated Frequency:** A

Consequence / Risk Rank

Receptor	Rad				Chem				Phy			
	Unmit.		PHR Mit.		Unmit.		PHR Mit.		Unmit.		PHR Mit.	
WG1					N	C	N	C	H	A1	L	B
WG2					N	C	N	C	H	A1	L	B
WG3					N	C	N	C				
MOI					N	C	N	C				

Preventive Features:	
Engineered	None
Admin	• (Non-SC/SS) Argon Line (Designed to Appropriate Codes and Standards) • (Non-SC/SS) Argon Supply (Remote Location of Argon Supply) • (Non-SC/SS) Operator training & procedures (Handling of asphyxiants and flammable gases)
Mitigative Features:	
Engineered	• (Non-SC/SS) Building ventilation system (Dilution air supply and negative pressure)
Admin	• (Non-SC/SS) Event Response Program (Worker performs appropriate response.)

Credited SSCs and ACs

	Class	Control	Attribute	Affected Receptors
Preventers	None			
Mitigators	None			
Notes:	• (asphyxiation) • Standard Industrial Hazard			
References:	None			

Low Activity Process Line Events

Hazard Evaluation Table - Event LAL-2-001

Description:
Energetic reaction during neutralization in cementation head tank results in eructation (burp materials from tank)

Locations:
- LAW process area

MAR:
- One LA cementation batch

Release Mechanisms:
- Aerosolization

Assumptions:
None

Causes:
- Add in wrong order
- No cooling
- No mixing
- Operator error
- Rapid addition of base

Unmitigated System Effects:
None

Methods of Detection:
- Operator observation
- Radiation monitoring
- Vessel ventilation high or low pressure alarm

Unmitigated Frequency: A

Mitigated Frequency: A

Consequence / Risk Rank

Receptor	Rad				Chem				Phy			
	Unmit.		PHR Mit.		Unmit.		PHR Mit.		Unmit.		PHR Mit.	
WG1	L	B	N	C	N	C	N	C	M	B1	L	B
WG2	L	B	N	C	N	C	N	C	M	B1	L	B
WG3	N	C	N	C	N	C	N	C				
MOI	N	C	N	C	N	C	N	C				

Preventive Features:

Engineered	• (Non-SC/SS) [FC] Mixing in neutralization tank (Thorough mixing) • (Non-SC/SS) [FC] Neutralization tanks cooling system (Temperature control) • (Non-SC/SS) [FC] Orifice Flow Control (Limits Caustic Addition Rate)
Admin	• (Non-SC/SS) [FC] Operator training & procedures (Addition of materials (e.g., during cementation or neutralization))

Mitigative Features:

Engineered	• (Non-SC/SS) [FC] Building ventilation system w/HEPA (Containment) • (Non-SC/SS) [FC] LAW PVV ventilation and HEPAs (Containment) • (Non-SC/SS) [FC] Overflow line to collection point (LAW process) or to collection tank (HAW process) (Containment)
Admin	• (Non-SC/SS) [FC] Event Response Program (Worker performs appropriate response.) • (Non-SC/SS) [FC] Radiological Protection Program (Monitor of radiological conditions and application of appropriate response)

Credited SSCs and ACs

	Class	Control	Attribute	Affected Receptors
Preventers	None			
Mitigators	None			
Notes:	• May result in heat, splashing, overflow, gas generation			
References:	None			

Hazard Evaluation Table - Event LAL-2-002

Description:
Energetic reaction in LA Floor Drain Collection Tank results in eructation (burp materials from tank)

Locations:	**MAR:**
• LAW process area	• Entire LAW inventory

Release Mechanisms:
- Aerosolization

Assumptions:
None

Causes:
- Overflow or drop of caustic solution to Floor Drain Collection Tank

Unmitigated System Effects:	**Methods of Detection:**
None	• Level indication instrumentation • Operator observation • Radiation monitoring
Unmitigated Frequency: A	**Mitigated Frequency:** A

Consequence / Risk Rank

Receptor	Rad				Chem				Phy			
	Unmit.		PHR Mit.		Unmit.		PHR Mit.		Unmit.		PHR Mit.	
WG1	L	B	N	C	M	B1	L	B	M	B1	L	B
WG2	L	B	N	C	M	B1	L	B	M	B1	L	B
WG3	N	C	N	C	M	B1	L	B				
MOI	N	C	N	C	N	C	N	C				

Preventive Features:	
Engineered	None
Admin	• (Non-SC/SS) [FC] Operator training & procedures (Material transfer procedures)
Mitigative Features:	
Engineered	• (Non-SC/SS) [FC] Building ventilation system w/HEPA (Containment) • (Non-SC/SS) [FC] LAW PVV ventilation and HEPAs (Containment)
Admin	• (Non-SC/SS) [FC] Event Response Program (Worker performs appropriate response.) • (Non-SC/SS) [FC] Radiological Protection Program (Monitor of radiological conditions and application of appropriate response)

Credited SSCs and ACs

	Class	Control	Attribute	Affected Receptors
Preventers	None			
Mitigators	None			
Notes:	• May result in heat, splashing, overflow, gas generation			
References:	None			

Hazard Evaluation Table - Event LAL-2-003

Description:
Uncontrolled chemical reaction in LA Head Tank results in eructation (burp materials from tank)

Locations:
- LAW Evaporator Head Tank

MAR:
- Small Amount of LAW Liquid (Assume Entire LA Inventory)

Release Mechanisms:
- Aerosolization

Assumptions:
None

Causes:
- Caustic waste recycled to LA Head Tank
- Operator error

Unmitigated System Effects:
None

Methods of Detection:
- Operator observation
- Radiation monitoring
- Vessel ventilation high or low pressure alarm

Unmitigated Frequency: A

Mitigated Frequency: A

Consequence / Risk Rank

Receptor	Rad				Chem				Phy			
	Unmit.		PHR Mit.		Unmit.		PHR Mit.		Unmit.		PHR Mit.	
WG1	L	B	N	C	N	C	N	C	M	B1	N	C
WG2	L	B	N	C	N	C	N	C	M	B1	N	C
WG3	N	C	N	C	N	C	N	C				
MOI	N	C	N	C	N	C	N	C				

Preventive Features:

Engineered	None
Admin	• (Non-SC/SS) [FC] Flow through the Recycle Line from the Cement Head Tank to the Evaporator Head Tank (Limit on Rate of Flow) • (Non-SC/SS) [FC] Operator training & procedures (Material transfer procedures)

Mitigative Features:

Engineered	• (Non-SC/SS) [FC] Building ventilation system w/HEPA (Containment) • (Non-SC/SS) [FC] LAW PVV ventilation and HEPAs (Containment) • (Non-SC/SS) [FC] Overflow line to collection point (LAW process) or to collection tank (HAW process) (Containment)
Admin	• (Non-SC/SS) [FC] Event Response Program (Worker performs appropriate response.) • (Non-SC/SS) [FC] Radiological Protection Program (Monitor of radiological conditions and application of appropriate response)

Credited SSCs and ACs

	Class	Control	Attribute	Affected Receptors
Preventers	None			
Mitigators	None			
Notes:	None			
References:	None			

Hazard Evaluation Table - Event LAL-2-004

Description:
Red oil explosion in LAW Evaporator resulting in the release of LAW material

Locations:	**MAR:**
• LAW evaporator	• Evaporator contents

Release Mechanisms:
• High-pressure venting.

Assumptions:
• Waste streams transferred to WSB will meet waste acceptance criteria established to protect the facility inventory limits, assumed hydrogen generation rates, radiation dose rates, chemical content, and criticality evaluation bases.

Causes:
• Organic carryover from MFFF (TBP) OR the accumulation of organic (TBP) in WSB process AND strong acid AND a temperature sufficiently high to generate volatile organics rapidly enough for a flammable atmosphere to develop

Unmitigated System Effects:	**Methods of Detection:**
None	• High evaporator temperature alarm • High steam pressure alarm • High steam temperature alarm • Operator observation • Radiation monitoring
Unmitigated Frequency: NC	**Mitigated Frequency:** NC

Consequence / Risk Rank

Receptor	Rad				Chem				Phy			
	Unmit.		PHR Mit.		Unmit.		PHR Mit.		Unmit.		PHR Mit.	
WG1	L	NA	L	NA	M	NA	M	NA	H	NA	H	NA
WG2	L	NA	L	NA	M	NA	M	NA	H	NA	H	NA
WG3	N	NA	N	NA	M	NA	M	NA				
MOI	N	NA	N	NA	N	NA	N	NA				

Preventive Features:	
Engineered	None
Admin	• (SS) {IC} Waste Acceptance Criteria Program (Verification that organic content (primarily TBP) in feed stream meets the WSB WAC)
Mitigative Features:	
Engineered	None
Admin	None

Credited SSCs and ACs

	Class	Control	Attribute	Affected Receptors
Preventers	None			
Mitigators	None			
Notes:	• Beyond Design Basis Accident • Feed streams will not contain sufficient organics to cause a red oil explosion. This is an assumption that will be protected by the WAC.			
References:	None			

Hazard Evaluation Table - Event LAL-2-004a

Description:
In the LAW evaporator, trace levels of organic compounds decompose creating a flammable atmosphere that causes an explosion resulting in the release of radioactive material.

Locations:
- LAW evaporator

MAR:
- Evaporator contents

Release Mechanisms:
- High-pressure venting.

Assumptions:
None

Causes:
- Organic carryover from MFFF (TBP) OR the accumulation of organic (TBP) in WSB process AND strong acid AND a temperature sufficiently high to generate volatile organics rapidly enough for a flammable atmosphere to develop

Unmitigated System Effects:
None

Methods of Detection:
- Operator observation
- Radiation monitoring

Unmitigated Frequency: U

Mitigated Frequency: Prevented

Consequence / Risk Rank

Receptor	Rad				Chem				Phy			
	Unmit.		PHR Mit.		Unmit.		PHR Mit.		Unmit.		PHR Mit.	
WG1	L	B			M	B1			H	A1		
WG2	L	B			M	B1			H	A1		
WG3	N	C			M	B1						
MOI	N	C			N	C						

Preventive Features:

Engineered	• (SS) LAW Evaporator High Steam Pressure Interlock (Prevention of Steam Pressures Greater than 25 psig) • (SS) LAW Evaporator High Temperature Interlock (Prevents Temperatures Greater than 130 Degrees C) • (Non-SC/SS) Steam system (Steam regulated to below 25 psig)
Admin	• (Non-SC/SS) Evaporator normal operating limits (Evaporator temperature and pH limits) • (Non-SC/SS) Sampling for organics ahead of evaporator (Notification of high organic concentration ahead of evaporator) • (Non-SC/SS) Vessel mixing (Prevention of TBP accumulation prior to evaporation) • (SS) Waste Acceptance Criteria Program (Verification that organic content (primarily TBP) in feed stream meets the WSB WAC)

Mitigative Features:

Engineered	• (Non-SC/SS) Building ventilation system w/HEPA (Containment)
Admin	• (Non-SC/SS) Event Response Program (Worker evacuates area.) • (Non-SC/SS) Radiological Protection Program (Monitor of radiological conditions and application of appropriate response)

Credited SSCs and ACs

	Class	Control	Attribute	Affected Receptors
Preventers	SS	LAW Evaporator High Steam Pressure Interlock	Prevention of Steam Pressures Greater than 25 psig	
		Safety Function:	Prevents steam in the steam coil from reaching 25 psig, thus preventing LAW from reaching a temperature sufficiently high to generate volatile organics rapidly enough for a flammable atmosphere to develop.	
	SS	LAW Evaporator High Temperature Interlock	Prevents Temperatures Greater than 130 Degrees C	
		Safety Function:	Prevents the LAW from reaching 130 degrees C.	
	SS	Waste Acceptance Criteria Program	Verification that organic content (primarily TBP) in feed stream meets the WSB WAC	
		Safety Function:	Prevent introduction of sufficient organic compounds to produce a flammable mixture in the WSB vessels (including the evaporators).	
Mitigators	None			
Notes:	None			
References:	None			

Hazard Evaluation Table - Event LAL-3-010

Description:
Pressurization of the LA Evaporator Vessel resulting in the release of radiological material

Locations:
- LAW line

MAR:
- Evaporator contents (a portion of the material may be spilled through seals and/or connections)

Release Mechanisms:
- High-pressure venting.

Assumptions:
None

Causes:
- Blocked condensate line
- Closed valve
- Condensate hold tanks pressurized or not vented
- Corrosion or failure of steam coils during normal evaporator operation
- Demister plugged
- Operator error
- Plugged vents
- Steam leak

Unmitigated System Effects:
None

Methods of Detection:
- Radiation monitoring
- Vessel ventilation high or low pressure alarm

Unmitigated Frequency: A

Mitigated Frequency: A

Consequence / Risk Rank

Receptor	Rad				Chem				Phy			
	Unmit.		PHR Mit.		Unmit.		PHR Mit.		Unmit.		PHR Mit.	
WG1	L	B	N	C	M	B1	L	B	M	B1	N	C
WG2	L	B	N	C	M	B1	L	B	M	B1	N	C
WG3	N	C	N	C	M	B1	L	B				
MOI	N	C	N	C	N	C	N	C				

Preventive Features:

Engineered	None
Admin	• (Non-SC/SS) [FC] Evaporator steam coils integrity protection (Chemistry control of steam) • (Non-SC/SS) [FC] Operator training & procedures (Evaporator operation)

Mitigative Features:

Engineered	• (Non-SC/SS) [FC] Building ventilation system w/HEPA (Containment)
Admin	• (Non-SC/SS) [FC] Event Response Program (Worker performs appropriate response.) • (Non-SC/SS) [FC] Radiological Protection Program (Monitor of radiological conditions and application of appropriate response)

Credited SSCs and ACs

	Class	Control	Attribute	Affected Receptors
Preventers	None			
Mitigators	None			
Notes:	• Physical injury is due to scalding or acid burns.			
References:	None			

Transfer Line Events

Hazard Evaluation Table - Event TL-2-002

Description:
Detonation as a result of the buildup of H2 in MFFF High Activity Stream (liquid HAW) transfer line

Locations:	**MAR:**
• Outside WSB	• One HAW transfer volume

Release Mechanisms:
• Spill

Assumptions:
• Waste streams transferred to WSB will meet waste acceptance criteria established to protect the facility inventory limits, radiation dose rates, chemical content, and criticality evaluation bases.

Causes:
• Radiolysis AND ignition sources

Unmitigated System Effects:	**Methods of Detection:**
None	• Operator observation • Radiation monitoring • Vessel ventilation high or low pressure alarm
Unmitigated Frequency: U	**Mitigated Frequency:** U

Consequence / Risk Rank

Receptor	Rad				Chem				Phy			
	Unmit.		PHR Mit.		Unmit.		PHR Mit.		Unmit.		PHR Mit.	
WG1	H	A1	N	C	M	B1	N	C	N	C	N	C
WG2	H	A1	N	C	M	B1	N	C	N	C	N	C
WG3	M	B1	N	C	L	B	N	C				
MOI	L	B	N	C	N	C	N	C				

Preventive Features:	
Engineered	• (Non-SC/SS) [FC] {IC} Transfer lines (Transfer lines buried)
Admin	• (Non-SC/SS) HAW transfer lines are flushed following transfer of HAW. (Reduction in Flammable Gas Source)
Mitigative Features:	
Engineered	• (SS) HAW Transfer Line (Core Pipe) • (SS) HAW transfer line (Jacket)
Admin	• (SS) Event Response Program (Worker performs appropriate response.) • (SS) Transfer Control Program (Specific controls for transfer operations in lines that are temporarily exposed)

Credited SSCs and ACs

	Class	Control	Attribute	Affected Receptors
Preventers	None			
Mitigators	SS	Event Response Program	Worker performs appropriate response.	• Rad: WG1, WG2, WG3, MOI; • Chem: WG1, WG2, WG3; • Phy: WG1, WG2;
		Safety Function:	Reduces worker exposure and contamination potential	
	SS	HAW Transfer Line	Core Pipe	• Rad: WG1, WG2; • Chem: WG1, WG2;
		Safety Function:	Limits consequences to the facility worker from an explosion by not failing in a manner that compromises the containment function of the jacket.	
	SS	HAW transfer line	Jacket	• Rad: WG1, WG2, WG3, MOI; • Chem: WG1, WG2, WG3;
		Safety Function:	Contains leak from damaged core pipe	
	SS	Transfer Control Program	Specific controls for transfer operations in lines that are temporarily exposed	• Rad: WG1, WG2, WG3, MOI; • Chem: WG1, WG2, WG3;
		Safety Function:	Prevents or reduces exposures and potential for loss of confinement events associated with line being exposed	
Notes:	• Initial condition: the entire transfer line is underground. This limits the potential for an airborne release.			
References:	None			

Hazard Evaluation Table - Event TL-3-002

Description:
HAW Receipt Line breached inside of WSB, resulting in radiological spill

Locations:
- WSB

MAR:
- One HAW transfer volume

Release Mechanisms:
- Spill

Assumptions:
None

Causes:
- Over pressurization
- Pipe erosion / corrosion

Unmitigated System Effects:
None

Methods of Detection:
- Level indication instrumentation
- Operator observation
- Radiation monitoring

Unmitigated Frequency: A

Mitigated Frequency: Prevented

Consequence / Risk Rank

Receptor	Rad				Chem				Phy			
	Unmit.		PHR Mit.		Unmit.		PHR Mit.		Unmit.		PHR Mit.	
WG1	H	A1			M	B1			N	C		
WG2	H	A1			M	B1			N	C		
WG3	M	B1			L	B						
MOI	N	C			N	C						

Preventive Features:

Engineered	• (SS) HAW transfer line (Jacket) • (Non-SC/SS) [FC] Pipe design (Meets applicable code for pressures, temperatures and material of transport)
Admin	• (SS) Structural Integrity Program (HAW Transfer Line Jacket Inspections and Requirements) • (SS) Transfer Control Program (Physical inspection)

Mitigative Features:

Engineered	• (Non-SC/SS) [FC] Reinforced Concrete Encasement of above Ground Receipt Lines external to Facility (Containment) • (Non-SC/SS) [FC] Transfer lines (Transfer lines buried)
Admin	• (Non-SC/SS) [FC] Event Response Program (Worker performs appropriate response.) • (Non-SC/SS) HAW transfer lines are flushed following transfer of HAW. (Reduction in amount of radioactive material in pipe) • (Non-SC/SS) [FC] Radiological Protection Program (Monitor of radiological conditions and application of appropriate response)

Credited SSCs and ACs

	Class	Control	Attribute	Affected Receptors
Preventers	SS	HAW transfer line	Jacket	
		Safety Function:	Contains leak from damaged core pipe	
	SS	Structural Integrity Program	HAW Transfer Line Jacket Inspections and Requirements	
		Safety Function:	Ensures that the integrity of the HAW transfer line jacket is maintained	
	SS	Transfer Control Program	Physical inspection	
		Safety Function:	Identify damaged lines prior to transfer and prevent overpressurization of line	
Mitigators	None			
Notes:	• Transfer pump belongs to and is controlled by MFFF. It needs to be sized such that it will not overpressurize transfer line components.			
References:	None			

Hazard Evaluation Table - Event TL-3-004

Description:
HAW Receipt Line breached outside of WSB, resulting in radiological spill

Locations:
- Outside WSB

MAR:
- One HAW transfer volume

Release Mechanisms:
- Liquid seeps to surface.

Assumptions:
None

Causes:
- Operator error
- Overload due to heavy equipment or excavation in area

Unmitigated System Effects:
None

Methods of Detection:
- Level indication instrumentation
- Operator observation
- Radiation monitoring

Unmitigated Frequency: A

Mitigated Frequency: Prevented

Consequence / Risk Rank

Receptor	Rad				Chem				Phy			
	Unmit.		PHR Mit.		Unmit.		PHR Mit.		Unmit.		PHR Mit.	
WG1	H	A1			M	B1			N	C		
WG2	H	A1			M	B1			N	C		
WG3	M	B1			L	B						
MOI	N	C			N	C						

Preventive Features:

Engineered	• (Non-SC/SS) [FC] Transfer lines (Transfer lines buried)
Admin	• (SS) HAW Transfer Line Protection Program (Underground indicator placed over the line and markings clearly identifing the location of the line) • (Non-SC/SS) [FC] Operator training & procedures (Control of excavation activities (dig permits, etc.)) • (SS) Site Clearance Permit (Restrictions on Excavation Location and Parameters) • (SS) Traffic Control Program (Restrictions on Where and How Heavy Vehicles Travel) • (SS) Transfer Control Program (Physical inspection)

Mitigative Features:

Engineered	None
Admin	• (Non-SC/SS) Event Response Program (Worker performs appropriate response.) • (Non-SC/SS) HAW transfer lines are flushed following transfer of HAW. (Reduction in amount of radioactive material in pipe) • (Non-SC/SS) [FC] Radiological Protection Program (Monitor of radiological conditions and application of appropriate response)

Credited SSCs and ACs

	Class	Control	Attribute	Affected Receptors
Preventers	SS	HAW Transfer Line Protection Program	Underground indicator placed over the line and markings clearly identifing the location of the line	
		Safety Function:	Protect from inadvertent excavation into buried line.	
	SS	Site Clearance Permit	Restrictions on Excavation Location and Parameters	
		Safety Function:	Prevents inadvertent breach of buried receipt line caused by excavation	
	SS	Traffic Control Program	Restrictions on Where and How Heavy Vehicles Travel	
		Safety Function:	Prevent breach of pipe from load of heavy equipment	
	SS	Transfer Control Program	Physical inspection	
		Safety Function:	Identify damaged lines prior to transfer and prevent overpressurization of line	
Mitigators	None			
Notes:	• Transfer line is buried.			
References:	None			

Hazard Evaluation Table - Event TL-3-005

Description:
Buried portion of HAW Receipt Line is breached while portions of it have been exposed for maintenance activities or other abnormal operations, resulting in radiological spill

Locations:
- Outside WSB

MAR:
- One HAW transfer volume

Release Mechanisms:
- Spill

Assumptions:
None

Causes:
- Erosion/ corrosion
- Maintenance activity
- Seismic event
- Tornado
- Vehicle impact

Unmitigated System Effects:
None

Methods of Detection:
- Operator observation
- Radiation monitoring

Unmitigated Frequency: EU

Mitigated Frequency: Prevented

Consequence / Risk Rank

Receptor	Rad				Chem				Phy			
	Unmit.		PHR Mit.		Unmit.		PHR Mit.		Unmit.		PHR Mit.	
WG1	H	A2			M	B1			L	B		
WG2	H	A2			M	B1			L	B		
WG3	M	B1			L	B						
MOI	N	C			N	C						

Preventive Features:

Engineered	None
Admin	• (Non-SC/SS) [FC] Site clearance permit (Restrictions on where and how heavy vehicles travel) • (SS) Transfer Control Program (Specific controls for transfer operations in lines that are temporarily exposed)

Mitigative Features:

Engineered	None
Admin	• (SS) Event Response Program (Worker performs appropriate response.) • (Non-SC/SS) HAW transfer lines are flushed following transfer of HAW. (Reduction in amount of radioactive material in pipe) • (Non-SC/SS) [FC] Radiological Protection Program (Monitor of radiological conditions and application of appropriate response)

Credited SSCs and ACs

	Class	Control	Attribute	Affected Receptors
Preventers	SS	Transfer Control Program	Specific controls for transfer operations in lines that are temporarily exposed	
		Safety Function:	Prevents or reduces exposures and potential for loss of confinement events associated with line being exposed	
Mitigators	SS	Event Response Program	Worker performs appropriate response.	• Rad: WG1, WG2, WG3, MOI; • Chem: WG1, WG2, WG3; • Phy: WG1;
		Safety Function:	Reduces worker exposure and contamination potential	
Notes:	• (Physical injury is due to acid burns)			
References:	None			

Hazard Evaluation Table - Event TL-7-002

Description:
HAW Receipt Line breached outside of WSB, resulting in radiological spill

Locations:
- Outside WSB

MAR:
- One HAW transfer volume

Release Mechanisms:
- Spill

Assumptions:
None

Causes:
- NPH (seismic)

Unmitigated System Effects:
None

Methods of Detection:
- Level indication instrumentation
- Operator observation
- Radiation monitoring

Unmitigated Frequency: U

Mitigated Frequency: Prevented

Consequence / Risk Rank

Receptor	Rad				Chem				Phy			
	Unmit.		PHR Mit.		Unmit.		PHR Mit.		Unmit.		PHR Mit.	
WG1	H	A1			M	B1			L	B		
WG2	H	A1			M	B1			L	B		
WG3	M	B1			L	B						
MOI	N	C			N	C						

Preventive Features:

Engineered	• (SS) HAW Transfer Line (HAW Transfer Line Core Pipe and Jacket (Seismic Qualification to Appropriate Level)) • (Non-SC/SS) [FC] Transfer lines (Transfer lines buried)
Admin	None

Mitigative Features:

Engineered	• (Non-SC/SS) [FC] HAW Transfer Line (Jacketed HAW Transfer Line)
Admin	• (Non-SC/SS) [FC] Event Response Program (Worker performs appropriate response.) • (Non-SC/SS) [FC] Radiological Protection Program (Monitor of radiological conditions and application of appropriate response) • (Non-SC/SS) Transfer line is flushed following transfer of HAW waste. (Removal of Radioactive Material from Transfer Line)

Credited SSCs and ACs

	Class	Control	Attribute	Affected Receptors
Preventers	SS	HAW Transfer Line	HAW Transfer Line Core Pipe and Jacket (Seismic Qualification to Appropriate Level)	
		Safety Function:	Prevents breaching of the transfer line due to seismic event	
Mitigators	None			
Notes:	• (Physical injury is due to acid burns)			
References:	None			

Waste Handling Events

Hazard Evaluation Table - Event WH-1-002

Description:
Fire on TRU waste storage pad, results in radiological release

Locations:
- TRU waste container storage building

MAR:
- 320 PEC plus 20,434 Curies of Am-241 (TRU waste container storage building (4 containers @ 80 PEC [max] = 320 PEC plus 48 drums of cemented waste @ 45 grams of Am-241 per drum (48 * 45 grams of Am-241 * 3.44 curies/gram of Am-241 = 7,430 curies))

Release Mechanisms:
- Burn of contaminated combustible material

Assumptions:
- Inside WSB there will be no more than one job TRU waste drum in a single location other than the TRU waste packaging room, which may have equivalent of 2 TRU waste drums.

Causes:
- Combustible material AND ignition sources: forklift fuel; electrical; mechanical friction; operator error

Unmitigated System Effects:
None

Methods of Detection:
- Fire detection and control room alarm.
- Operator observation
- Radiation monitoring

Unmitigated Frequency: A

Mitigated Frequency: A

Consequence / Risk Rank

Receptor	Rad				Chem				Phy			
	Unmit.		PHR Mit.		Unmit.		PHR Mit.		Unmit.		PHR Mit.	
WG1	H	A1	L	B	N	C	N	C	L	B	L	B
WG2	H	A1	L	B	N	C	N	C	L	B	L	B
WG3	L	B	N	C	N	C	N	C				
MOI	N	C	N	C	N	C	N	C				

Preventive Features:

Engineered	None
Admin	• (Non-SC/SS) [FC] Fire Protection Program (Combustible controls) • (Non-SC/SS) [FC] Operator training & procedures (Combustible controls, control of ignition sources, fire watch)

Mitigative Features:

Engineered	• (Non-SC/SS) [FC] Pallets for waste drum storage (Non-Combustible)
Admin	• (SS) Event Response Program (Worker performs appropriate response.) • (SS) Inventory Control Program (Limit on the Number of TRU Drums at the Waste Storage Pad) • (SS) Waste Acceptance Criteria Program (Limits Radiological Content in TRU Waste Drums)

Credited SSCs and ACs

	Class	Control	Attribute	Affected Receptors
Preventers	None			
Mitigators	SS	Event Response Program	Worker performs appropriate response.	• Rad: WG1, WG2, WG3, MOI;
		Safety Function:	Reduces worker exposure and contamination potential	
	SS	Inventory Control Program	Limit on the Number of TRU Drums at the Waste Storage Pad	• Rad: WG1, WG2, WG3;
		Safety Function:	Number of TRU waste drums at the Waste Storage Pad limited such that the CW guidelines will not be challenged.	
	SS	Waste Acceptance Criteria Program	Limits Radiological Content in TRU Waste Drums	• Rad: WG1, WG2, WG3, MOI;
		Safety Function:	Limits the quantity of radiological material at risk for release	
Notes:	None			
References:	None			

Hazard Evaluation Table - Event WH-2-001

Description:
A deflagration involving one TRU waste container, results in a radiological release

Locations:
- Inside or outside the WSB or TRU waste container storage building

MAR:
- 80 PEC (1 TRU waste container)

Release Mechanisms:
- Burn of contaminated combustible material

Assumptions:
- Inside WSB there will be no more than one job TRU waste drum in a single location other than the TRU waste packaging room, which may have equivalent of 2 TRU waste drums.

Causes:
- Ignition source (e.g., static, thermal, impact, friction, operator error) AND Presence of flammable concentrations of H2 or VOCs in the container headspace

Unmitigated System Effects:
None

Methods of Detection:
- Operator observation
- Radiation monitoring

Unmitigated Frequency: A

Mitigated Frequency: EU

Consequence / Risk Rank

Receptor	Rad				Chem				Phy			
	Unmit.		PHR Mit.		Unmit.		PHR Mit.		Unmit.		PHR Mit.	
WG1	M	B1	M	B1	N	C	N	C	H	A1	H	A2
WG2	M	B1	M	B1	N	C	N	C	H	A1	H	A2
WG3	N	C	N	C	N	C	N	C				
MOI	N	C	N	C	N	C	N	C				

Preventive Features:

Engineered	• (Non-SC/SS) [FC] 7A Type A containers (Vented)
Admin	• (Non-SC/SS) [FC] Operator training & procedures (Packaging and handling of drums) • (SS) TRU Waste Acceptance Criteria (Waste drums properly vented and packaged in accordance with Waste Acceptance Criteria)

Mitigative Features:

Engineered	• (Non-SC/SS) [FC] Building ventilation system w/HEPA (Containment)
Admin	• (Non-SC/SS) [FC] Event Response Program (Worker performs appropriate response.) • (Non-SC/SS) [FC] Radiological Protection Program (Monitor of radiological conditions and application of appropriate response)

Credited SSCs and ACs

	Class	Control	Attribute	Affected Receptors
Preventers	SS	TRU Waste Acceptance Criteria	Waste drums properly vented and packaged in accordance with Waste Acceptance Criteria	
		Safety Function:	Prevents buildup of flammable concentrations of hydrogen and VOCs	
Mitigators	None			
Notes:	• (High physical consequences are due to lid ejection)			
References:	None			

Hazard Evaluation Table - Event WH-4-002

Description:
Skin puncture during loading of container results in radiological contamination

Locations:
- Waste packaging areas of WSB

MAR:
- Radiological contamination

Release Mechanisms:
- Puncture with contaminated item.

Assumptions:
None

Causes:
- Improper use of tools during packaging
- Operator error
- Using hands to compress contents of container

Unmitigated System Effects:
None

Methods of Detection:
- Operator observation
- Radiation monitoring

Unmitigated Frequency: A

Mitigated Frequency: U

Consequence / Risk Rank

Receptor	Rad				Chem				Phy			
	Unmit.		PHR Mit.		Unmit.		PHR Mit.		Unmit.		PHR Mit.	
WG1	H	A1	M	B1	N	C	N	C	L	B	N	C
WG2	N	C	N	C	N	C	N	C				
WG3	N	C	N	C	N	C	N	C				
MOI	N	C	N	C	N	C	N	C				

Preventive Features:	
Engineered	None
Admin	• (SS) Radiological Protection Program (Proper methods and equipment for use when handling radioactive waste)
Mitigative Features:	
Engineered	None
Admin	• (Non-SC/SS) [FC] Event Response Program (Worker performs appropriate response.) • (SS) Radiological Protection Program (Monitor of radiological conditions and application of appropriate response)

Credited SSCs and ACs

	Class	Control	Attribute	Affected Receptors
Preventers	SS	Radiological Protection Program	Proper methods and equipment for use when handling radioactive waste	
		Safety Function:	Prevents personnel contamination and uptake from skin puncture caused by improper handling of radioactive waste	
Mitigators	SS	Radiological Protection Program	Monitor of radiological conditions and application of appropriate response	• Rad: WG1; • Phy: WG1;
		Safety Function:	Prevents or reduces personnel contamination and radiation exposure	
Notes:	None			
References:	None			

WSRC-SA-2003-00002
Rev. 0

WASTE SOLIDIFICATION BUILDING PRELIMINARY DOCUMENTED SAFETY ANALYSIS

CHAPTER 4

SAFETY STRUCTURES, SYSTEMS, AND COMPONENTS

JULY 2008

UNCLASSIFIED

DOES NOT CONTAIN UNCLASSIFIED CONTROLLED NUCLEAR INFORMATION

DC & Reviewing Official: David Allison
WSMS

Basis: IG-SR-03, 02/04
Date: 5/06/08

SAVANNAH RIVER SITE
Aiken, SC 29808 · www.srs.gov

PREPARED FOR THE U.S. DEPARTMENT OF ENERGY UNDER CONTRACT NO. DE-AC09SR18500

DISCLAIMER

This document was prepared by Washington Safety Management Solutions LLC (WSMS), under contract with Washington Savannah River Company (WSRC), subject to the warranty and other obligations of that contract and in furtherance of WSRC's contract with the United States Department of Energy (DOE).

Release to and Use by Third Parties. As it pertains to releases of this document to third parties, and the use of or reference to this document by such third parties in whole or in part, neither WSMS, WSRC, DOE, nor their respective officers, directors, employees, agents, consultants or personal services contractors (i) make any warranty, expressed or implied, (ii) assume any legal liability or responsibility for the accuracy, completeness, or usefulness, of any information, apparatus, product or process disclosed herein or (iii) represent that use of the same will not infringe privately owned rights. Reference herein to any specific commercial product, process, or service by trademark, name, manufacture or otherwise, does not necessarily constitute or imply endorsement, recommendation, or favoring of the same by WSMS, WSRC, DOE or their respective officers, directors, employees, agents, consultants or personal services contractors. The views and opinions of the authors expressed herein do not necessarily state or reflect those of the United States Government or any agency thereof.

CONTENTS

Page

4.0 SAFETY STRUCTURES, SYSTEMS, AND COMPONENTS 4.1-1

4.1 INTRODUCTION 4.1-1

4.2 REQUIREMENTS 4.2-1

4.3 SAFETY CLASS STRUCTURES, SYSTEMS, AND COMPONENTS 4.3-1

4.4 SAFETY SIGNIFICANT STRUCTURES, SYSTEMS, AND COMPONENTS 4.4-1

4.4.1 Waste Solidification Building, High Activity Waste Area, and Cementation area 4.4-1

4.4.1.1 Waste Solidification Building 4.4-1

4.4.1.2 High Activity Waste Area 4.4-4

4.4.1.3 Cementation Area 4.4-7

4.4.2 High Activity Waste Process Piping, Valves, and Vessels, High Activity Waste Sample Lines, and High Activity Waste Cementation Transfer Line 4.4-10

4.4.2.1 High Activity Waste Process Piping, Valves, and Vessels 4.4-10

4.4.2.2 High Activity Waste Sample Lines 4.4-14

4.4.2.3 High Activity Waste Cementation Transfer Line 4.4-16

4.4.3 High Activity Waste Transfer Line 4.4-18

4.4.4 High Activity Waste Process Vessel Vent System 4.4-21

CONTENTS (continued)

Page

4.4.5 High Activity Waste Ventilation Systems – (High Activity Waste Process Room Ventilation, High Activity Waste Cementation Enclosure Ventilation, High Activity Waste Sample Glovebox Ventilation, and Laboratory Glovebox Ventilation) 4.4-26

4.4.5.1 High Activity Waste Process Room Ventilation System 4.4-26

4.4.5.2 High Activity Waste Cementation Enclosure Ventilation System 4.4-29

4.4.5.3 High Activity Waste Sample Glovebox Ventilation System 4.4-31

4.4.5.4 Laboratory Glovebox Ventilation System 4.4-33

4.4.6 High Activity Waste Area and Cementation Area Fire Suppression Systems 4.4-35

4.4.7 High Activity Waste and Low Activity Waste Evaporator High Steam Pressure and High Temperature Interlocks 4.4-38

4.4.8 High Activity Waste Cementation Enclosure, High Activity Waste Sample Glovebox and Laboratory Glovebox 4.4-41

4.4.8.1 High Activity Waste Cementation Enclosure 4.4-41

4.4.8.2 High Activity Waste Sample Glovebox 4.4-43

4.4.8.3 Laboratory Glovebox 4.4-46

4.4.9 Diesel Generator 4.4-48

4.5 SPECIFIC ADMINISTRATIVE CONTROLS 4.5-1

4.5.1 Radiological Protection Program 4.5-1

4.5.2 Event Response Program 4.5-2

4.5.3 Waste Acceptance Criteria Program 4.5-2

CONTENTS (continued)

Page

4.5.4 High Activity Waste Transfer Line Protection Program 4.5-5

4.5.5 Transfer Control Program 4.5-6

4.5.6 Fire Protection Program 4.5-6

4.5.7 Inventory Control Program 4.5-7

4.5.8 Protection of High Activity Waste Evaporator Steam Coils' Integrity 4.5-9

4.5.9 Site Work Control Program 4.5-10

4.5.10 Traffic Control Program 4.5-10

4.6 REFERENCES 4.6-1

4.7 TABLES 4.7-1

TABLES

Page

Table 4.4-1 Safety Significant Structures, Systems, and Components 4.7-1

Table 4.5-1 Specific Administrative Controls..... 4.7-12

ACRONYMS

º C	degree Celsius
AC	Administrative Control
ATS	Automatic Transfer Switch
BDBA	Beyond Design Basis Accident
CFR	Code of Federal Regulation
CHA	Consolidated Hazards Analysis
DBA	Design Basis Accident
DBE	Design Basis Earthquake
DF	Design Feature
DOE	U. S. Department of Energy
EG	Evaluation Guideline
ERP	Event Response Program
FDD	Facility Design Description
FHA	Fire Hazard Analysis
FPP	Fire Protection Program
FW	Facility Worker
HA	Hazard Analysis
HAW	High Activity Waste
HC	Hazard Category
HEPA	High-Efficiency Particulate Air
ICP	Inventory Control Program
kVA	kilovolt ampere
LAW	Low Activity Waste
LCO	Limiting Condition for Operation
LFL	Lower Flammability Limit
MAR	Material At Risk
MFFF	Mixed Oxide Fuel Fabrication Facility
MOI	Maximally-exposed Offsite Individual
NFPA	National Fire Protection Association
NPH	Natural Phenomena Hazard
PC	Performance Category
PCS	Process Control System
PDSA	Preliminary Documented Safety Analysis
psig	pounds per square inch, gauge
PVVS	Process Vessel Vent System
rem	Roentgen Equivalent, man
rpm	Revolutions per Minute

RPP	Radiological Protection Program

ACRONYMS (Continued)

SAC	Specific Administrative Control
SDD	System Design Description
SIL	Safety Integrity Level
SR	Surveillance Requirement
SRS	Savannah River Site
SSC	Structure, System, and Component
SSIS	Safety Significant Instrumented System
STD	Standard
SWCP	Site Work Control Program
TBP	Tri-n-butyl phosphate
TLPP	Transfer Line Protection Program
TRU	Transuranic
TSR	Technical Safety Requirements
USQ	Unreviewed Safety Question
V	volt
WAC	Waste Acceptance Criteria
WACP	Waste Acceptance Criteria Program
WG	Worker Group
WSB	Waste Solidification Building
WSRC	Washington Savannah River Company

4.0 SAFETY STRUCTURES, SYSTEMS, AND COMPONENTS

4.1 INTRODUCTION

This chapter of the Preliminary Documented Safety Analysis (PDSA) for the Waste Solidification Building (WSB) provides details on those facility Structures, Systems, and Components (SSCs) that have a functional classification of Safety Significant. The chapter also provides an overview of those Administrative Controls (ACs) that are candidates for being classified as Specific Administrative Controls (SACs) per the criteria in U.S. Department of Energy (DOE) Standard (STD) 1186-2004 (Ref. 1). There are no Safety Class SSCs for the WSB.

The form and content of Chapter 4 is a graded approach consistent with DOE-STD-3009-94 (Ref. 2) appropriate to the nature of the PDSA and its early pre-operational development. Specific information is not available or has not been fully developed to the stage to support a thorough conventional DOE-STD-3009-94 (Ref. 2) based document. Detailed process and support operations and maintenance, including instrumentation, monitoring, surveillances, procedures, and training are, in many cases, unknown or are evolving. Detailed information, form, and content are provided to the extent they are available.

The Safety Significant SSCs of the WSB and candidate SACs are necessary to protect the onsite (co-located worker) and facility worker (FW) by serving as preventers or mitigators of postulated events. The scope of this chapter includes the following:

- Description of the safety SSCs or SACs for the WSB, including the required safety functions.
- Identification of the functional requirements necessary for the safety SSCs or SACs to perform their safety functions and the general conditions caused by postulated accidents under which the safety SSCs must operate.
- Identification of the performance criteria necessary to provide reasonable assurance that the functional requirements are met.
- Identification of all assumptions that require Technical Safety Requirement (TSR) coverage.

As part of the safety analysis procedure defined in DOE-STD-3009-94 (Ref. 2), the engineered safety features that prevent or mitigate the consequences of all potential accidents, including the Design Basis Accidents (DBAs), must be identified. A description of the safety functions, interfaces, operating conditions, and performance criteria for the engineered safety features is also required.

DOE-STD-3009-94 (Ref. 2) prescribes the use of a graded approach for the effort expended in safety analyses and the level of detail presented in associated documentation. The graded approach adjusts the magnitude of the preparation effort to the characteristics of the WSB based on the facility hazard magnitude or severity, the facility complexity, and the facility life-cycle

stage. Thus, DOE-STD-3009-94 (Ref. 2) provides for the development of the WSB safety analysis based on these three factors.

The WSB is a Hazard Category (HC) 2 facility.

4.2 REQUIREMENTS

This chapter was prepared in accordance with the format and content requirements defined in Title 10 of the Code of Federal Regulations (CFR), Part 830 (Ref. 3) and DOE-STD-3009-94 (Ref. 2). Safety SSCs were identified in accordance with the guidance provided in DOE-STD-3009-94 (Ref. 2), DOE-STD-1186-2004 (Ref. 1), DOE-STD-1091-93 (Ref. 4), Procedure 2.25 of the Washington Savannah River Company (WSRC) Procedure Manual E7 (Ref. 5), and the WSRC TSR Methodology Manual (Ref. 6).

Detailed design codes and standards applicable to the WSB are provided in the Facility Design Description (FDD) (Ref. 7) and specific System Design Descriptions (SDDs).

4.3 SAFETY CLASS STRUCTURES, SYSTEMS, AND COMPONENTS

There are no Safety Class SSCs in the WSB. The consequences of all the postulated events analyzed did not challenge the Evaluation Guidelines (EGs) for the Maximally-exposed Offsite Individual (MOI). Safety Class functions are required when accidents are postulated that could exceed the offsite EGs contained in WSRC Procedure Manual E7, Procedure 2.25 (Ref. 5). The WSB Consolidated Hazards Analysis (CHA) (Ref. 8) has shown that under the worst postulated accident scenario (the full facility fire), the conservatively calculated consequences do not challenge the offsite EGs contained in WSRC Procedure Manual E7, Procedure 2.25 (Ref. 5).

4.4 SAFETY SIGNIFICANT STRUCTURES, SYSTEMS, AND COMPONENTS

The SSCs listed in Table 4.4-1 are designated as Safety Significant. The table identifies the Chapter 3 accident(s) or rationale upon which the Safety Significant designation is based. The table also identifies the safety functions, functional requirements, and performance criteria. Critical assumptions, inputs, and initial conditions judged to require TSR coverage based on the WSB CHA (Ref. 8) are provided in Chapter 3, Table 3.3-1.

Throughout this chapter, the term Performance Category (PC)-3+ is used as it is defined in Reference 7 and in Chapter 1, Sections 1.4.3 and 1.5.1, of this PDSA. A PC-3+ SSC is one that meets all PC-3 seismic design criteria, but for more rigorous specification such as higher ground acceleration. Throughout this chapter the terms seismically qualified, seismic design, etc., credited for Safety Significant SSCs, refers to this PC-3+ criteria, unless otherwise specifically called out.

4.4.1 WASTE SOLIDIFICATION BUILDING, HIGH ACTIVITY WASTE AREA, AND CEMENTATION AREA

4.4.1.1 Waste Solidification Building

4.4.1.1.1 SAFETY FUNCTION

The Safety Significant function of the WSB (structural shell, walls, roof, floor, etc.) is to limit the consequences to all workers during Natural Phenomena Hazard (NPH) events. The function is accomplished by the following:

- The WSB structure maintains its structural integrity during high winds and seismic events to protect safety SSCs.

4.4.1.1.2 SYSTEM DESCRIPTION

The WSB shell forms a robust reinforced concrete structure (footprint approximately 32,900 square feet of the overall 174,000 square foot WSB site) qualified to PC-3+ seismic and PC-3 wind/tornado criteria. The building is designed to provide structural support and protection of WSB safety SSCs and also confinement (not credited) as part of an overall system to control the migration of radioactive and hazardous materials during NPH events (Ref. 8).

A summary structure description is provided in Chapter 2, Section 2.4, with detailed structure and system design specifications provided in the WSB High Activity Waste (HAW) system and WSB building structure SDDs (Ref. 9, 10), and Engineering Standard 01060 (Ref. 11). Detailed National Fire Protection Association (NFPA) and site fire requirements are specified in the SDD (Ref. 10) and Fire Hazard Analysis (FHA) (Ref. 12).

4.4.1.1.3 FUNCTIONAL REQUIREMENTS

The WSB design is credited with:

- Protecting safety SSCs in the WSB (e.g., HAW area walls, HAW vessels, lines, valves, and the Process Vessel Vent System [PVVS] in the PVVS rooms) from NPH events by meeting PC-3+ for seismic, PC-3 for wind/tornado NPH events, and design criteria.

The functional requirements of the WSB are Design Features (DFs) and will be included in the TSR and controlled through ACs. All DFs are required to comply with the code of record version and/or applicable update, including NFPA, site/industry structural design criteria as specified primarily in the SDD (Ref. 9, 10), Engineering Standard 01060 (Ref. 11) and FHA (Ref. 12) to be implemented through site programs, including surveillance, maintenance, and testing requirements.

4.4.1.1.4 SYSTEM EVALUATION

In order for the WSB structural shell to perform the credited Safety Significant function to protect all workers from NPH events, it must meet design specifications and also meet the assumptions and provide the level of controls specified in the Hazard Analysis (HA) and supporting accident analyses as indicated in Chapter 3. The WSB structural shell must have its safety SSCs verified and periodically evaluated for impairment of the safety functions for which it has been credited. NPH events are described in Chapter 3.

The capability of the WSB shell to meet performance criteria could be impaired by exceptionally long or intense fires; beyond design bases NPH events; design non-compliance or modification of the walls, roof, or flooring; or non-safety SSCs causing damage to credited SSCs.

Event vulnerabilities for the WSB structure to perform its safety function are highest from intense fires, NPH Beyond Design Basis Accidents (BDBA), and energetic external events. Compromising the WSB safety function increases the possibility of a release of hazardous material from the HAW area. The WSB structure is a robust concrete, reinforced 18-inch barrier designed to PC-3+ seismic, PC-3 wind/tornado criteria. Although it is not credited as a fire barrier due to openings (doors, etc.), it is expected to preclude external fires from directly affecting the building interior or HAW area (analyses assume embers from a wild-fire may enter the building ventilation to start a full facility fire). A non-seismic fire is mitigated by the building (not credited), the credited HAW area fire suppression system, and the HAW PVVS.

A BDBA or external impact could collapse part of the building and the safety SSCs associated with protecting HAW releases (HAW area fire walls, ventilation, or PVVS) could be compromised. However, the design specification for the structure meets or exceeds all regulatory NPH design requirements. Due to the robust nature of the NPH design, HAW area seismic fire walls, process vessels, etc., the chance of a significant building collapse with a large confinement failure of HAW safety SSCs is remote. The same is true for most postulated external events. A BDBA plane crash or an energetic vehicle impact into the building or the WSB exhaust stack (and collapse) could also cause building damage and possibly compromise the HAW safety

SSCs. The WSB exhaust stack is assumed not to fail in a manner that could affect evaluated HAW area safety SSCs (Ref. 8). The stack is designed to PC-3+ seismic, and PC-3 for wind/tornado criteria, and the HAW area is not within the fall radius of the stack (Ref. 10 and Chapter 2, Section 2.4.2). The stack is approximately 50 feet tall and 35 feet from the southeast edge of the WSB. The distance from the stack to the HAW area is about 200 feet and to the cementation area is over 100 feet.

Existing safety controls, in addition to those specified in Section 4.4.1.1.1, mitigating or preventing events described in this section (4.4.1.1.4) include the following:

- HAW area fire suppression system – suppresses non-seismic fires in the HAW area
- The seismically qualified PVVS – removes airborne hazardous material from the process vessels as a result of, explosion, and seismic events
- HAW process room ventilation – removes airborne hazardous material during and after process room spills and energetic events
- HAW area design – provides robust, seismically qualified SSCs, and 3-hour fire walls
- HAW piping, valves, and vessels – provides robust, seismically qualified SSCs. Pipes are corrosion resistant and detonation resistant to preclude spills/releases and explosions. Transfer lines and sample lines are jacketed outside process room, enclosure, and sample glovebox.
- The Fire Protection Program (FPP) – mitigates fires by limiting combustibles and flammable liquids and gases
- The Event Response Program (ERP) – protects all workers for most events by requiring appropriate response
- The Radiological Protection Program (RPP) –protects the immediate FW by preparation and monitoring for radiological events
- The configuration control program – protects all safety SSCs from degradation and planned activities
- The Site Work Control Program (SWCP) and the Traffic Control Program – protects WSB structures from external events
- Hoisting and Rigging Program – protects WSB structures from impact with dropped loads and from inadvertent crane movement

4.4.1.1.5 TECHNICAL SAFETY REQUIREMENT CONTROLS

The WSB structural shell is a passive DF and will be included in the TSR. As such, it is not required to be specifically controlled by a Limiting Condition for Operation (LCO) in the TSR but will be protected by ACs. The configuration control program (site Unreviewed Safety Question [USQ] Program [Ref. 13], and the Structural Integrity Program) ensures that no unreviewed changes occur to Safety Significant DFs and that their function is maintained. This program requires that any design changes are reviewed to ensure that the credited controls can

continue to perform their Safety Significant functions and that these features will not be affected by the proposed activity. As noted in DOE Order 420.1B (Ref. 14), configuration management assessments include the periodic review of system operability, reliability, and material condition during facility inspections required by DOE Order 433.1A (Ref. 15). These periodic reviews assess the building shell and HAW Process Room's ability to perform their design and safety functions.

4.4.1.2 High Activity Waste Area

4.4.1.2.1 SAFETY FUNCTION

The Safety Significant function of the HAW area is to limit the consequences to all workers during fires inside or outside the HAW area, and NPH events. In addition, the HAW area process room limits the consequences to the FWs for a process room spill. The functions are accomplished by the following:

- The HAW process room walls and stainless steel liner contain any spills to the immediate area.
- The HAW area fire barrier prevents fire propagation into or out of the HAW area.
- The seismically qualified fire barrier around the HAW area prevents fire propagation into the HAW area following a seismic event.
- The seismically qualified fire barrier around and between the two PVVS trains prevents fire propagation into or between the PVVS rooms and SSCs.

4.4.1.2.2 SYSTEM DESCRIPTION

The HAW area structure is reinforced concrete qualified to PC-3+ seismic criteria. Within the HAW area is the HAW process room containing the HAW process vessels, the hot maintenance area adjacent to the process room, the Process Control System (PCS) room, the PVVS fans and filter rooms (two separate rooms, one for each PVVS train, surrounded by and separated by PC-3+ seismic and 3-hour fire barriers), and the HAW support room, containing the sampling glovebox and lines, adjacent to the process room on the second level. The walls surrounding the HAW area are fire resistive, meeting the 3-hour fire ratings as designated by NFPA criteria. All penetrations through the process area walls are seismically qualified and designed to 3-hour fire rating criteria. The HAW area interior concrete walls are qualified to PC-3+ seismic criteria (e.g., half height partitions between sections, wall and ceiling between maintenance area and HAW process room). Each of the four HAW Process Room sections has a stainless steel liner which is designed to PC-3+ seismic criteria. The liners are credited with confining spills during and after loss of confinement events. Because the liners are not credited during a seismic event, the PC-3+ seismic qualification is not a credited attribute.

A stainless steel liner (and small sump) is located in each of the four HAW process room sections (Ref. 9). The liner covers the floor, sump, and up the walls to a height that represents the

larger volume of either the vessel capacity or 10% of the total HAW liquid volume (Ref. 16). A pump in the sump provides for pumping sump contents to the acid overflow tank.

The HAW process room is within the HAW area structure (bounded by the external PC-3+ seismic qualified 3 hour fire barrier walls enclosing the HAW area). The HAW area encompasses the confinement boundary of the HAW process room. Included in the HAW process room boundary is that part of the HAW Ventilation System and ducts from the HAW process room up through the first High Efficiency Particulate Air (HEPA) filter.

A summary structure description is provided in Chapter 2, Section 2.6.5 and 2.7.2, with detailed structure and system design specifications provided in the WSB HAW system and WSB building structure SDDs (Ref. 9, 10), and Engineering Standard 01060 (Ref. 11). Detailed NFPA and site fire requirements are specified in the SDD (Ref. 10) and FHA (Ref. 12).

4.4.1.2.3 FUNCTIONAL REQUIREMENTS

The HAW area design must supply the following:

- Protect the process room vessels from building fire events by ensuring seismically qualified 2-hour fire barriers (a minimum 2-hour rating is required by accident analysis, designed to 3-hour rating) surrounding the HAW area
- Protect safety SSCs including the process vessels from NPH events by meeting PC-3+ seismic design criteria
- Provide for process room spill confinement for the environment and solution content and volumes anticipated.

The functional requirements of the HAW area are DFs and will be included in the TSR and protected by ACs. All DFs are required to comply with the code of record version and/or applicable update, including NFPA, site/industry structural design criteria as specified primarily in the SDD (Ref. 9, 10), Engineering Standard 01060 (Ref. 11) and FHA (Ref. 12) to be implemented through site programs, including surveillance, maintenance, and testing requirements.

4.4.1.2.4 SYSTEM EVALUATION

In order for the HAW area structure to perform the credited Safety Significant functions to protect the workers, it must meet design specifications and assumptions and provide the level of controls specified in the HA and supporting accident analyses as indicated in Chapter 3. The HAW area must have the safety SSCs verified and periodically evaluated for impairment of the safety functions for which it has been credited. HAW loss of confinement/spill events and HAW fire events and NPH events are described in Chapter 3.

The capability of the HAW area structure to meet safety performance criteria could be impaired by exceptionally long or intense fires; beyond design bases NPH events; design non-compliance

or modification of the walls, stainless steel liner, or fire barrier; or non-safety SSCs causing damage to credited SSCs.

Event vulnerabilities for the HAW area structure to perform its safety functions are highest from intense fires, NPH BDBAs, and energetic external events. Compromising the HAW area safety function increases the possibility of a release of hazardous material from the HAW area. The HAW area structure is a robust concrete, reinforced 18-inch barrier designed to PC-3+ seismic criteria with 3-hour rated fire walls. It is expected to preclude intense fires from directly affecting the HAW area (analyses assumes embers from a wild-fire may enter the HAW process room to start a HAW fire). A non-seismic fire event is mitigated by the HAW area fire suppression system.

An NPH BDBA or energetic external impact (plane crash, etc.) could collapse part of the building, and/or the safety SSCs associated with protecting HAW releases (fire walls, HAW process room ventilation, or PVVS) could be compromised. However, the design specification for the structure meets or exceeds all regulatory NPH design requirements (Ref. 9, 10). Due to the robust nature of the NPH design, the HAW area seismic fire walls and process room seismic walls, and seismic process vessels and pipes, a significant building collapse with a large confinement failure of HAW safety SSCs is remote. The same is true for most postulated external events. A BDBA plane crash or an energetic vehicle impact into the building (part of the HAW area boundary is also the WSB boundary – common external wall) could also cause HAW area structural damage and possibly compromise the HAW safety SSCs.

The fire barrier around the HAW area is an 18-inch barrier with 3-hour penetration seals (designed to 3 hour, assumed at least 2 hour in analyses), a conservative quality factor of 0.98% and wear-out probability of 0.001 (Ref. 17). The fire barrier wear-out probability is the likelihood that a barrier will fail by collapse or excessive conductive heat transfer during the fire exposure. The failure probability of the HAW fire barrier surrounding the HAW area is 2.1E-02 (Ref. 17). For a seismic fire inside the process room, just the combination of expected Design Basis Earthquake (DBE) seismic event occurrence (approximately 1E-04/yr) and the fire barrier failure probability (approximately 1E-02) indicates the fire barrier design (PC-3+ seismic) is more than adequate for intense fires and more significant Beyond DBE seismic events than the design bases requirements (DBE analyzed for approximately 1E-04 hazard exceedance probability [Ref. 18]). A seismically initiated fire within the concrete and stainless steel lined HAW process room surrounded by fire barriers qualified to PC-3+ seismic criteria, with low combustible design, and no flammable gases or liquids (highest potential initiator of seismic fires) and with a transient combustible control program (Safety Significant function) is not considered a credible challenge to existing safety controls.

Existing safety controls, in addition to those specified in Section 4.4.1.2.1, mitigating or preventing events described in this section (4.4.1.2.4) include the following:

- HAW area fire suppression system – suppresses non-seismic fires
- The seismically qualified PVVS – removes airborne hazardous material from the process vessels during and after, explosion, and seismic events

- HAW ventilation system – removes airborne hazardous material during and after process room spills and energetic events
- HAW piping, valves, and vessels – provides robust, seismically qualified SSCs. Pipes are corrosion resistant and detonation resistant to preclude spills/releases and explosions. Transfer lines and sample lines are jacketed outside process room, enclosure, and sample glovebox to contain spills.
- The FPP – mitigates fires by limiting combustibles, ignition sources, and flammable liquids and gases
- The ERP – protects all workers for most events by requiring appropriate response
- The RPP – protects the immediate FW by preparation and monitoring for radiological events
- The SWCP and the Traffic Control Program – protects WSB and HAW area structures by preventing external events
- The configuration control program – protects all safety SSCs from degradation and planned activities

4.4.1.2.5 TECHNICAL SAFETY REQUIREMENT CONTROLS

The HAW area safety functions are primarily passive DFs and will be included in the TSR. DFs are not required to be specifically controlled by a LCO in the TSR but will be protected by ACs. However, some functions or components such as fire barrier dampers are also verified through functional tests and surveillances (e.g., Fire Suppression System), and Administrative Controls (e.g., FPP periodically ensures fire doors/dampers/seals are in place). The configuration control program (site USQ Program [Ref. 13], and the Structural Integrity Program) ensures that no unreviewed changes occur to Safety Significant DFs and that their function is maintained. This program requires that any design changes be reviewed to ensure that the credited controls can continue to perform their Safety Significant function and that these features will not be affected by the proposed activity. As noted in DOE Order 420.1B (Ref. 14), configuration management assessments include the periodic review of system operability, reliability, and material condition during facility inspections required by DOE Order 433.1A (Ref. 15). These periodic reviews assess the HAW area ability to perform its design and safety functions.

4.4.1.3 Cementation Area

4.4.1.3.1 SAFETY FUNCTION

The Safety Significant function of the cementation area is to limit the consequences to FWs during fires and NPH events. The functions are accomplished by the following:

- The cementation area qualified fire barrier prevents fire propagation into or out of the HAW cementation room.

- The cementation area seismically qualified fire barrier prevents a seismic initiated fire from propagating into the HAW cementation room.

4.4.1.3.2 SYSTEM DESCRIPTION

The cementation area is a reinforced concrete structure qualified to PC-3+ seismic. The walls surrounding the cementation area are fire resistive, meeting 3-hour fire ratings as designated by the NFPA criteria. All penetrations through the cementation area walls are 3 hour fire rated. The cementation area contains the HAW cementation room, the HAW cementation transfer line, and the HAW cementation enclosure. The cementation area also contains similar Low Activity Waste (LAW) functions, but they are not addressed due to the lack of significance of the hazard. HAW solution transferred from the process room via the transfer line into the enclosure is mixed with pre-measured cement in a drum for solidification. The drum is connected to the PVVS during liquid phase to sweep explosive vapors from the drum.

A summary structure description is provided in Chapter 2, Sections 2.4, 2.5, 2.6, and 2.7, with detailed structure and system design specifications provided in the WSB HAW system and WSB building structure SDDs (Ref. 9, 10), and Engineering Standard 01060 (Ref. 11). Detailed NFPA and site fire requirements are specified in the SDD (Ref. 10) and FHA (Ref. 12).

4.4.1.3.3 FUNCTIONAL REQUIREMENTS

The cementation area design must supply the following:

- Protect the HAW cementation room hazardous material inventory during building fire events by ensuring seismically qualified 3 hour fire barriers surrounding the cementation area.

The functional requirements of the cementation area are DFs and will be included in the TSR and protected by ACs. All DFs are required to comply with the code of record version and/or applicable update, including NFPA, site/industry structural design criteria as specified primarily in the SDD (Ref. 9, 10), Engineering Standard 01060 (Ref. 11) and FHA (Ref. 12) to be implemented through site programs, including surveillance, maintenance, and testing requirements.

4.4.1.3.4 SYSTEM EVALUATION

In order for the cementation area to perform the safety functions to protect the safety SSCs and workers they must meet the same design specifications, support the assumptions, and provide the level of controls specified in the HA and supporting accident analyses as indicated in Chapter 3. The cementation area must have the safety SSCs verified and periodically evaluated for impairment of the safety functions for which it has been credited.

The capability of the cementation area to meet performance criteria could be impaired by exceptionally long or intense fires; beyond design bases NPH events; design non-compliance or

modification of the walls, seismic fire barrier; enclosure, or non-safety SSCs causing damage to credited SSCs.

Event vulnerabilities for the cementation area structure to perform its safety functions are highest from intense fires, NPH BDBAs, and energetic external events. Compromising the cementation area safety function increases the possibility of a release of hazardous material from the cementation area. The cementation area structure is a robust concrete, reinforced 18-inch barrier designed to PC-3+ seismic criteria with 3-hour rated fire walls. It is expected to preclude intense fires outside the area from directly affecting the cementation area inventory. A non-seismic fire is mitigated by the cementation area fire suppression system, the HAW Ventilation System (exhausts the enclosure), and the cementation area ventilation (exhausts the cementation room).

An NPH BDBA or energetic external impact (plane crash, etc.) could collapse part of the building and/or the safety SSCs associated with protecting cementation releases (seismic fire walls, cementation area ventilation, PVVS) could be compromised. However, the design specification for the structure meets or exceeds all regulatory NPH design requirements (Ref. 9, 10). Due to the robust nature of the fire and NPH design (cementation area seismic fire walls, seismically qualified transfer pipe, etc.), a significant cementation area structural collapse is not likely. The same is true for most postulated external events. A BDBA plane crash or an energetic vehicle impact into the cementation area could cause structural damage and possibly compromise the cementation area safety SSCs.

Existing safety controls, in addition to those specified in Section 4.4.1.3.1, mitigating or preventing events described in this section (4.4.1.3.4) include the following:

- Cementation area fire suppression system – suppresses non-seismic fires
- The seismically qualified PVVS – provides dilution air flow to the liquid drums to preclude explosion events
- HAW cementation transfer line - provides robust, seismically qualified, jacketed piping that is corrosion resistant, detonation resistant, and precludes spills/releases and explosions
- The FPP – mitigates fires by limiting combustibles, ignition sources, and flammable liquids and gases
- The ERP – protects all workers for most events by requiring appropriate response
- The RPP – protects the immediate FW by preparation and monitoring for radiological events
- The SWCP and the Traffic Control Program – protects WSB structures by preventing external events
- The configuration control program – protects all safety SSCs from degradation and planned activities

4.4.1.3.5 TECHNICAL SAFETY REQUIREMENT CONTROLS

The cementation area safety structural design is a passive DF and will be included in the TSR. As such, it is not required to be specifically controlled by a LCO in the TSR but will be protected by ACs. The configuration control program (site USQ program [Ref. 13] and the Structural Integrity Program) ensures that no unreviewed changes occur to Safety Significant DFs and that their function is maintained. This program requires that any design changes be reviewed to ensure that the credited controls can continue to perform their Safety Significant function and that these features will not be affected by the proposed activity. As noted in DOE Order 420.1B (Ref. 14), configuration management assessments include the periodic review of system operability, reliability, and material condition during facility inspections required by DOE Order 433.1A (Ref. 15). These periodic reviews assess the cementation area ability to perform its design and safety functions.

4.4.2 HIGH ACTIVITY WASTE PROCESS PIPING, VALVES, AND VESSELS, HIGH ACTIVITY WASTE SAMPLE LINES, AND HIGH ACTIVITY WASTE CEMENTATION TRANSFER LINE

4.4.2.1 High Activity Waste Process Piping, Valves, and Vessels

4.4.2.1.1 SAFETY FUNCTION

The Safety Significant function of the HAW area process piping, valves, vessels, etc. is to limit the consequences to all workers during and after a seismic spill or an explosion in a process line/vessel, to limit the consequences to the FWs from a spill or from an explosion in a fluidic pump charge vessel, and to prevent physical injury to the immediate FW due to a detonation in a line or valve. The functions are accomplished by the following:

- HAW process vessels, valves, and piping are seismically qualified to prevent a spill of HAW material during a seismic event.
- HAW steam coils and cooling coils inside vessels and vessel penetrations that become part of the vessel pressure boundary are seismically qualified to prevent the release of HAW material outside vessels during a seismic event.
- HAW cooling coil system is based on a triple independent loop system design.
- Overflow lines on HAW vessels (with the exception of the acid overflow tank and evaporator) are connected to an overflow tank to contain overflow materials and protect head space volume assumptions in the time to Lower Flammability Limit (LFL) calculation (Ref. 19).
- HAW evaporator is designed to protect the head space volume assumptions in the time to LFL calculation (Ref 19).
- HAW piping and valves do not fragment to cause the immediate FW physical injury due to a detonation.

- HAW process vessels survive the pressure spike generated by a detonation in the charge vessel.
- The fluidic transfer pump charge vessels will not fail in a fashion that will cause a failure of the HAW process vessels. If the pump fragments during a detonation, it will fragment in such a way as not to cause the failure of the HAW process vessel. This attribute works together with the PVVS (Section 4.4.3) to provide confinement during and after detonation in a fluidic transfer pump charge vessel.

4.4.2.1.2 SYSTEM DESCRIPTION

The HAW process vessels, piping, and valves are robustly constructed and made of stainless steel. They are designed to resist expected corrosive environments, radiation, and high energetic seismic, explosion, fire, and spill events (Ref. 9, 20). The main process vessels (except the acid overflow tank and evaporator) have anti-siphoning process overflow lines to the overflow tank and are configured to prevent a loss of confinement from splashing (due to additions or mixing) and overflow. The overflow lines also serve to limit the assumptions of vessel head space volume in the time to LFL calculations (Ref. 19). In the HAW evaporator, the vessel head space assumptions are protected by the evaporator design. All vessel penetrations are sealed by welds or flanges. Vessel wall thicknesses range from 1/4 to 5/8 inch and are sized based on radiation shielding and corrosion criteria. The vessel heads are thicker than the walls. All process lines are qualified to PC-3+ seismic criteria and designed to withstand the effects of a detonation (Ref. 9, 20). HAW process lines outside the process room are jacketed to contain line leaks. The jackets are qualified to PC-3+ seismic criteria. Jacketed lines include the transfer line, HAW cementation transfer line, and the HAW sample lines, which are addressed in the specific sections for those lines. In addition, the cooling coil system will be a triple-loop system in which only the exterior surface of the primary loop contacts the HAW.

A summary description is provided in Chapter 2, Section 2.6, with detailed system design specifications provided in the HAW system SDD (Ref. 9).

4.4.2.1.3 FUNCTIONAL REQUIREMENTS

The HAW process vessels, piping, and valves design must provide the following:

- Preventing the spill of HAW material during a seismic event from the HAW process vessels, piping, steam coils, and cooling coils inside vessels
- Not fragmenting to cause the immediate FW physical injury due to a detonation
- Surviving the pressure spike generated by a detonation in the charge vessel
- Providing containment during and after a design basis fire event
- The fluidic transfer pump charge vessels not failing in a fashion that will cause the failure of the HAW process vessels
- Providing lines for overflow of the process vessels to prevent a spill if the vessel capacity is exceeded and to ensure head space volume assumptions in time to LFL calculations

- Providing a HAW evaporator design that will ensure head space volume assumptions in the time to LFL calculations are protected

- Preventing loss of confinement due to an integrity failure in a steam or cooling coil.

The functions are required during specified modes of operation when hazardous material is present in process vessels, piping, etc. The functional requirements of the HAW process vessels, piping, etc. are DFs and will be included in the TSR and protected by ACs (e.g., the Structural Integrity Program).

All DFs are required to comply with the code of record version and/or applicable update including structural design criteria as specified in the SDD (Ref. 9, 10), and Engineering Standard 01060 (Ref. 11).

4.4.2.1.4 SYSTEM EVALUATION

In order for the HAW process vessels, piping, and valves to perform their Safety Significant functions to protect the workers, they must meet design specifications and meet the assumptions and provide the level of controls specified in the HA and supporting accident analyses as provided in Chapter 3. Pipes, vessels, and charge vessel design criteria must support detonation analysis and assumptions as provided in References 20 and 21. The installed vessels, piping, and valves must have the SSCs verified and periodically evaluated for impairment of the safety functions for which they have been credited. Leak/spill events and NPH events are described in Chapter 3.

The capability of the HAW process vessels, lines, and valves to meet performance criteria could be impaired by design non-compliance or modification to a charge vessel, transfer pump, process vessels, lines or valves; an NPH BDBA; intense fires; or non-safety SSCs causing damage to credited SSCs.

The impairment vulnerability that has the most credible and significant consequence potential is that of process vessels, pipes, etc. failing due to other SSCs' (building walls/roof, etc.) inadvertent action/failure. Significant NPH or external events could cause the building or building SSCs to interact or prevent safety functions. As indicated in Subsection 4.4.1.5, the SDDs (Ref. 9, 10), and the FDD (Ref. 7), the WSB design is such that all SSCs, including the walls and roof, are designed to PC-3+ seismic criteria which preclude most credible events that could cause the building shell to fail such that safety functions are impaired. In addition, all HAW piping has PC-3+ automatic seismic isolation valves (Chapter 2, Section 2.6.11) that serve to maintain the pressure boundary of the HAW process system; thereby, ensuring the confinement of the HAW solutions in a seismic event. Also, the building stack is located such that its failure (fall radius) would not impact the process room vessels (Section 4.4.1.1.4).

HAW process lines are designed to resist detonation events by not fragmenting (Ref. 20). However, process lines that are in a condition to create a large confined void space could support flammable gas accumulation and subsequently may have the potential for a detonation. If energetic enough, the detonation could cause some movement or deformation of the process line and support structures or could release hazardous material. Sufficient energy from a detonation

that could cause a process line to burst is possible only with the increased pressure during pump startup (Ref. 20). Also, the relatively small diameter of the process pipes precludes the potential to accumulate large volumes of explosive gas that could cause a highly energetic explosion. Because this is not an issue with a fluid full pipe, or a completely drained configuration, a detonation event would be most probable in the large transfer lines, after a lengthy transfer interruption or system shutdown, and has the potential to affect a FW in the HAW Process Area. Because of the robust nature of the HAW process lines, consequences would be expected to be localized, but may result in additional ACs to protect the FW. Further evaluation of this potential is in progress and will be addressed in the Documented Safety Analysis.

In addition to the required seismic DF for ensuring evaporator cooling coil integrity, the cooling coil design (triple loop design, [Ref. 9]) will be protected through a TSR. The DF is an initial design assumption that precludes high consequences to the FW from a loss of cooling coil confinement event.

Existing safety controls, in addition to those specified in Section 4.4.2.1.1, mitigating or preventing events described in this section (4.4.2.1.4) include the following:

- HAW area design – precludes impairment due to seismic events
- HAW area fire suppression system and fire barriers – precludes fires from becoming intense and degrading the process vessels, lines, etc.
- PVVS – provides filtration of airborne hazardous material and dilution air flow to prevent accumulation of flammable gas to 25% of LFL
- HAW ventilation system – mitigates consequences from spills outside the process vessels
- SWCP and the Traffic Control Program – protects WSB structures by preventing external events
- ERP –protects all workers for most events by requiring appropriate response
- RPP – protects the immediate FW by preparation and monitoring for radiological events
- Configuration control program – protects safety SSCs from degradation and planned activities through attributes such as the USQ process
- Hoisting and Rigging Program – protects safety SSCs from impact with dropped loads and from inadvertent crane movement

4.4.2.1.5 TECHNICAL SAFETY REQUIREMENT CONTROLS

The HAW process piping, vessels, and valves are passive DFs and will be included in the TSR. As such, they are not required to be specifically controlled by an LCO in the TSR but will be protected by ACs. The configuration control program (site USQ Program [Ref. 13] and the Structural Integrity Program) ensures that no unreviewed changes occur to Safety Significant DFs and that their function is maintained. This program requires that any design changes be reviewed to ensure that the credited control can continue to perform its Safety Significant function and that these features will not be affected by the proposed activity. As noted in DOE Order 420.1B (Ref. 14), configuration management assessments include the periodic review of

system operability, reliability, and material condition during facility inspections required by DOE Order 433.1A (Ref. 15). These periodic reviews assess the process piping, valves, and vessels ability to perform their design and safety functions.

4.4.2.2 High Activity Waste Sample Lines

4.4.2.2.1 SAFETY FUNCTION

The Safety Significant function of the HAW sample lines is to limit consequences to FWs from spills, including seismically induced spills, and explosions. The function is accomplished by the following:

- The sample line jacket directs leaks from the sample lines back to the lined portion of the HAW process room
- The sample lines and jackets are seismically qualified, thus, preventing spills during and after seismic events
- The sample lines do not fail in a manner that compromises confinement function of the line jacket due to a detonation
- The sample lines do not fragment to cause the immediate FW physical injury due to detonation.

4.4.2.2.2 SYSTEM DESCRIPTION

HAW process sample lines run from each HAW vessel location to a bundle, and then the bundle runs through the process room wall and up to the sample glovebox. The lines are less than 1 inch in diameter, are robustly fabricated of 304L stainless steel, are corrosion resistant for the anticipated environment, will resist the effects of a detonation, and are seismically qualified. Sample lines are credited to be jacketed from the lined portion of the HAW process room to the HAW sample glovebox and to be qualified to PC-3+ seismic criteria. Any leakage from the lines drains back into the lined portion of the HAW process room.

The HAW system SDD (Ref. 9) provides specification that the sample lines be double walled outside the process room and meet PC-3+ seismic criteria.

A summary description is provided in Chapter 2, Section 2.6.9, with detailed system design specifications provided in the HAW system SDD (Ref. 9).

4.4.2.2.3 FUNCTIONAL REQUIREMENTS

The jacketed sample lines prevent leaks outside of the HAW process room that could be of high consequence to the FWs. The function is accomplished by the jacketed lines directing the HAW leaks back to the lined portion of the HAW process room and by the lines being seismically qualified. The integrity of the jacketed sample lines is to be maintained during normal

operations. The jacketed sample lines are designed to prevent corrosion, over-pressurization, and external impacts in order to guard against leaks and spills of the HAW liquid.

All DFs are required to comply with the code of record version and/or applicable update including structural design criteria as specified in the SDD (Ref. 9, 10), including Engineering Standard 01060 (Ref. 11).

4.4.2.2.4 SYSTEM EVALUATION

In order for the sample lines to perform their Safety Significant functions to protect the workers, the installed lines must meet design specifications, meet the assumptions, and provide the level of controls specified in the HA and supporting accident analyses as provided in Chapter 3. The sample lines will be periodically evaluated for impairment of the safety functions for which they have been credited. Leak/spill events and NPH events are described in Chapter 3.

The impairment vulnerability that has the most credible and significant consequence potential is that of the sample line failure due to other SSC (building walls/roof, etc.) inadvertent action/failure. Significant NPH or external events could cause the building or building SSCs to interact or prevent safety functions. As indicated in Subsection 4.4.1.5, the SDDs, and the FDD, the WSB design is such that all SSCs, including the walls and roof are designed to PC-3+ (seismic, PC-3 for other NPH events) criteria which preclude most credible events that could cause the building shell to fail such that safety functions are impaired. All sample piping is isolated by automatic valves (not credited for an active safety function) during a seismic DBA to prevent the release of HAW (Ref. 7). Fires and explosions are not of high concern due to the low inventory in the small lines, the robust nature of the design (able to resist detonation affects - see Section 4.4.2), the leak confinement design (jacket drains back to process room), and the fire suppression system (not credited).

Existing safety controls, in addition to those specified in Section 4.4.2.2.1, mitigating or preventing events described in this section (4.4.2.2.4) include the following:

- HAW area design – PC-3+ seismic design of walls around HAW support room (not all credited), etc. precludes impairment due to seismic events
- HAW process room ventilation – provides filtration of hazardous material for sample glovebox events
- Fire suppression system – mitigates fires in the HAW area
- SWCP and the Traffic Control Program – protects SSCs by preventing external events
- ERP –protects all workers for most events by requiring appropriate response
- RPP – protects the immediate FW by preparation and monitoring for radiological events
- The configuration control program – protects safety SSCs from degradation and planned activities

4.4.2.2.5 TECHNICAL SAFETY REQUIREMENT CONTROLS

The jacketed and seismically qualified sample lines are a passive DF and, as such, are not required to be specifically controlled by an LCO in the TSR. Under the configuration management system, assessments include periodic review of the system operability, reliability, and material condition during facility inspections as described in DOE Order 420.1B (Ref. 14) and DOE Order 433.1A (Ref. 15). These periodic reviews assess the sample lines ability to perform their design and safety functions.

4.4.2.3 High Activity Waste Cementation Transfer Line

4.4.2.3.1 SAFETY FUNCTION

The Safety Significant function of the HAW cementation transfer line is to limit the consequences to the FWs for spills, explosion, or seismic event. The function is accomplished by the following:

- The transfer line jacket contains leaks from damaged core pipe in the line.
- The transfer line jacket contains leaks due to a detonation in a core pipe and directs them to a collection point.
- The transfer line runs through a pipe chase protecting the transfer line from impact (prevents spill).
- The transfer line core pipe does not fail in a manner that compromises the confinement function of the jacket from a detonation.
- The transfer line core pipe does not fragment to cause the immediate FW physical injury.
- The transfer lines' core pipe and jacket are seismically qualified to prevent a spill from breaching a core line due to a seismic event.

4.4.2.3.2 SYSTEM DESCRIPTION

The cementation transfer line is robustly constructed and made of stainless steel. It is designed to resist expected corrosive environments, radiation, and high energetic seismic, explosion, and spill events (Ref. 7). The cementation transfer line is jacketed and the annulus monitored for leakage. It is seismically qualified, designed to PC-3+ seismic criteria, and designed to resist the effects of a detonation (Ref. 9, 20).

A summary description is provided in Chapter 2, Section 2.6.8, with detailed system design specifications provided in the HAW system SDD (Ref. 9).

The HAW cementation transfer line transports the HAW solution from the HAW cementation head tanks to the HAW cementation enclosure. The line is about 2 inches in diameter and is made of stainless steel. The cementation transfer line is jacketed and the annulus is monitored for leakage. The line is also qualified to PC-3+ seismic specification to resist seismic events and is

contained within a pipe chase to contain spills from impact events. The cementation transfer line core pipe is designed not to fail in a manner that compromises the confinement function of the jacket. Leakage from the transfer line is contained in a seismically qualified pipe jacket that flows into the HAW cementation enclosure.

A summary structure description is provided in the FDD (Ref. 7) with detailed structure and system design specifications provided in the HAW system SDD (Ref. 9).

4.4.2.3.3 FUNCTIONAL REQUIREMENTS

The integrity of the HAW cementation transfer line must be maintained during normal operations as well as during and following a seismic event. The function is required during specified modes of operation when hazardous material is present in the transfer line. The HAW cementation transfer line is constructed of stainless steel and jacketed in order to collect any HAW material leaking from the core pipe. The jacket protects the core pipe and provides reliable passive confinement in the event of failure of the core pipe. The transfer line's core pipe is designed to resist corrosion and over-pressurization in order to guard against HAW leaks and spills, and detonation. The pipe chase for the HAW cementation transfer line shall be maintained to preclude leaks due to impact.

The functional requirements of the HAW cementation transfer line are DFs and will be included in the TSR and protected by ACs. All DFs are required to comply with the code of record version and/or applicable update including site/industry structural design criteria, specifically those specified in the SDD (Ref. 9, 10) and as implemented through site programs, including surveillance, maintenance, and testing requirements.

4.4.2.3.4 SYSTEM EVALUATION

In order for the transfer line to perform its Safety Significant functions to protect the workers, it must meet design specifications, meet the assumptions, and provide the level of controls specified in the HA and supporting accident analyses as provided in Chapter 3. The installed transfer line must have the SSCs verified and periodically evaluated for impairment of the safety functions for which it has been credited. Leaks/spills, explosion events, and NPH events are described in Chapter 3.

The capability of the transfer line to meet performance criteria could be impaired by design non-compliance or by modifications to the core piping, transfer line jackets, or the pipe chase; inadvertent activities damaging the transfer line; or non-safety SSCs causing damage to the transfer line. The same system evaluation as for the HAW pipes provided in Section 4.4.1 is applicable for the transfer line.

Damage to the transfer line resulting in a spill or dispersion of HAW material may be due to a BDBA NPH event, inadequate line design/modification, corrosion, or an inadvertent impact to the line. These potential events are mitigated by the robust design (including the jacket) of the line, the drainage of any line leakage to the cementation enclosure, the confinement function of

the cementation enclosure, cementation enclosure ventilation, or the HAW ventilation system (dispersion events inside Process Room).

Existing safety controls, in addition to those specified in Section 4.4.2.3.1, mitigating or preventing events described in this section (4.4.2.3.4) include the following:

- Cementation area fire suppression system – protects the cementation transfer line from failure during non-seismic fire events
- Cementation enclosure ventilation – provides confinement for airborne hazardous material from leaks directed to the HAW cementation enclosure
- HAW ventilation system – provides confinement for hazardous airborne hazardous material from leaks inside the HAW process room
- Cementation enclosure – contains leaks from the transfer line
- Structural Integrity Program - ensures the integrity of the HAW cementation transfer line is maintained
- ERP – protects all workers for most events by requiring appropriate response
- RPP – protects the immediate FW by preparation and monitoring for radiological events
- The configuration control program – protects all safety SSCs from degradation and planned activities

4.4.2.3.5 TECHNICAL SAFETY REQUIREMENT CONTROLS

The HAW cementation transfer line safety functions are passive DFs and will be included in the TSR. As such, they are not required to be specifically controlled by an LCO in the TSR but will be protected by ACs. The configuration control program (site USQ Program [Ref. 13] and the Structural Integrity Program) ensures that no unreviewed changes occur to Safety Significant DFs and that their function is maintained. This program requires that any design changes be reviewed to ensure that the credited control can continue to perform its Safety Significant function and that these features will not be affected by the proposed activity. As noted in DOE Order 420.1B (Ref. 14), configuration management assessments include the periodic review of system operability, reliability, and material condition during facility inspections required by DOE Order 433.1A (Ref. 15). These periodic reviews assess the ability of the HAW cementation transfer line to perform its design and safety functions.

4.4.3 HIGH ACTIVITY WASTE TRANSFER LINE

4.4.3.1 SAFETY FUNCTION

The Safety Significant function of the HAW transfer line is to limit the consequences to the FWs for spills, explosion, or seismic event. The function is accomplished by the following:

- The transfer line jacket contains leaks from damaged core pipe in the line.

- The transfer line jacket contains leaks due to a detonation in a core pipe and directs them to a collection point.
- The core pipe does not fail in a manner that compromises the confinement function of the jacket from a detonation.
- The transfer lines' core pipe and jacket are seismically qualified, thus, preventing a spill due to a seismic event.

4.4.3.2 SYSTEM DESCRIPTION

The transfer line transports the HAW solution from Mixed Oxide Fuel Fabrication Facility (MFFF) to the HAW receipt tanks. The line is underground to the HAW process room. The transfer line is jacketed up to the HAW process room, and the annulus is monitored for leakage. The line and jacket are seismically qualified to PC-3+ seismic criteria to contain spills. The transfer line core pipe is designed not to fragment if a detonation occurs in the line. Leakage from the core pipe is contained in a seismically qualified jacket that flows back to the MFFF.

A summary structure description is provided in the Chapter 2, Section 2.6.7 and in the FDD (Ref. 7) with detailed structure and system design specifications provided in the HAW system SDD (Ref. 9).

4.4.3.3 FUNCTIONAL REQUIREMENTS

The integrity of the HAW transfer line must be maintained during normal operations as well as during and following a seismic event. The function is required during specified modes of operation when hazardous material is present in the transfer line. The transfer line is constructed of stainless steel and jacketed in order to collect any HAW material leaking from the core pipe. The stainless steel jacket protects the core pipe and provides reliable passive secondary confinement in the event of a failure of the core pipe. The transfer line's core pipe is designed to resist corrosion, over-pressurization, and detonation in order to guard against HAW leaks and spills.

The functional requirements of the transfer line are DFs and will be included in the TSR and protected by ACs. All DFs are required to comply with the code of record version and/or applicable update including site/industry structural design criteria, specifically those specified in the SDD (Ref. 9, 10) and as implemented through site programs, including surveillance, maintenance, and testing requirements.

4.4.3.4 SYSTEM EVALUATION

In order for the transfer line to perform its Safety Significant function to protect the workers, it must meet design specifications, meet the assumptions, and provide the level of controls specified in the HA and supporting accident analyses as provided in Chapter 3. The installed transfer line must have the SSCs verified and periodically evaluated for impairment of the safety

functions for which it has been credited. Leaks/spills, explosions, and NPH events are described in Chapter 3.

The capability of the transfer line to meet performance criteria could be impaired by design non-compliance or by modifications to the core piping, transfer line jackets, or inadvertent external activities; or non-safety SSCs causing damage to transfer line. The same system evaluation as for the HAW pipes provided in Section 4.4.2 is applicable for the transfer line, with the exception of an inadvertent impairment due to external construction, excavation, etc. to the line. This is protected through the ACs discussed in Section 4.5 (i.e., the HAW Transfer Line Protection Program[TLPP] which ensures that the transfer line location is clearly marked and an underground indicator is in place).

Existing safety controls, in addition to those specified in Section 4.4.3.1, mitigating or preventing events described in this section (4.4.3.4) include the following:

- HAW TLPP – protects the transfer line from inadvertent excavation damage through an underground indicator over the buried pipe, and by indicating through signs/markings the location of the buried pipe
- SWCP and the Traffic Control Program – protects the transfer line by preventing external events
- HAW Transfer Control Program – protects the FWs during transfers when the HAW transfer line is exposed
- ERP – protects all workers for most events by requiring appropriate response
- RPP – protects the immediate FW by preparation and monitoring for radiological events
- Configuration control program – protects all safety SSCs from degradation and planned activities

4.4.3.5 TECHNICAL SAFETY REQUIREMENT CONTROLS

The transfer line safety functions are passive DFs or ACs and will be included in the TSR. As such, they are not required to be specifically controlled by an LCO in the TSR but will be protected by ACs. The configuration control program (and site USQ program [Ref. 13]) ensures that no unreviewed changes occur to Safety Significant DFs, and that their function is maintained. This program requires that any design changes be reviewed to ensure that the credited control can continue to perform its Safety Significant function and that these features will not be affected by the proposed activity. As noted in DOE Order 420.1B (Ref. 14), configuration management assessments include the periodic review of system operability, reliability, and material condition during facility inspections required by DOE Order 433.1A (Ref. 15). These periodic reviews assess the ability of the transfer line to perform its design and safety functions.

4.4.4 HIGH ACTIVITY WASTE PROCESS VESSEL VENT SYSTEM

4.4.4.1 SAFETY FUNCTION

The primary Safety Significant function of the HAW PVVS is to maintain the HAW vessel flammable gas concentrations below 25% of the LFL by providing sufficient air flow. By preventing an explosion event, the HAW PVVS protects all workers. A second Safety Significant function of the HAW PVVS is to provide filtration of airborne hazardous material in the HAW vessels. This mitigative function is credited with reducing the consequences to the FWs. The HAW vessels support the filtration function by providing containment of the HAW material following potential explosions in fluidic pump charge vessels. These two functions of the PVVS are accomplished by the following:

- The PVVS maintains the HAW vessel (including the HAW evaporator) flammable gas concentration below 25% of the LFL by providing sufficient dilution flow, thereby, preventing an explosion in the HAW process room vessels/evaporator or HAW cementation drum (when connected to filling station).
- The PVVS provides filtration of airborne hazardous material from the HAW vessels after an explosion in a fluidic transfer pump charge vessel.
- The PVVS qualified to PC-3+ seismic criteria so that during and after a seismic event the PVVS will continue to maintain flammable gas concentration below 25% of the LFL by providing sufficient dilution flow and will continue to prevent the release of airborne hazardous material.
- The PVVS has dual trains separated by seismically qualified fire barriers so that during and after seismic and fire events, the PVVS will continue to maintain flammable gas concentration below 25% of the LFL by providing a dilution flow and will continue to mitigate the release of airborne hazardous material.

4.4.4.2 SYSTEM DESCRIPTION

The HAW PVVS is designed to remove explosive gases from the HAW vessels and cementation drums (during liquid phase). Each process vessel has an inlet supply connection and an outlet exhaust connection to the HAW PVVS. While drums are at the mixing station inside the HAW cementation enclosure, they are connected to the HAW PVVS. The PVVS also provides for filtration of airborne hazardous material from the HAW vessels through dual exhaust HEPAs during a process room fire and after an explosion in a fluidic transfer pump charge vessel.

Two dedicated independent and seismically qualified exhaust fans are provided for the PVVS, one running and one in automatic standby, to pull a continuous air flow (dilution) on each system. Should a fan fail, pressure monitoring instrumentation initiates an auto start signal to the standby fan. The PVVS maintains a minimum differential pressure between each HAW tank and the HAW process room. This differential pressure provides a minimum dilution flow through the vapor space of each vessel. The PVVS also provides for removing hazardous vapors from HAW drums and, thus, for preventing explosions in the HAW drums during the mixing phase of the cementation process.

A flow instrument device is provided on the inlet air side of each HAW process vessel. The flow measurements ensure that the PVVS is active and is drawing purge air into the vessels. The vacuum produced by the PVVS causes air to flow from the inlet HEPAs into the vessels, which dilutes the concentration of hydrogen inside of the tank head space. Each flow measurement circuit includes a low flow alarm. These alarms are hard wired to a logic solver and displayed in the control room, which also facilitates operator response, if appropriate. The PVVS also contains two pressure indicating transmitters. The transmitters measure the vacuum in the line, then relay data to a logic solver. The logic solver triggers a low pressure alarm (software) and a low-low pressure alarm (hardwired) signal. Automated valves are provided on the inlet and outlet of the HAW PVVS fans. The standby fan automatically starts upon the receipt of a low-low pressure signal.

The PVVS is designed to be qualified to PC-3+ seismic criteria (Ref. 7) to have dual independent trains (either of two fans is on-line, with common emergency diesel backup power) and to meet NFPA requirements including a seismically qualified fire barrier between trains. Should the primary exhaust path downstream of the HEPA filters (underground pipe from the WSB structure to the stack and/or stack exhaust path) be unavailable due to impairment from an external event or flow restriction, or should the exhaust fans both become inoperable, backup exhaust capabilities can be provided through an alternate connection (and temporary portable exhaust path and flow) in the external WSB wall. The two fans (each in one of two independent fire rated and seismically qualified rooms) and primary control and monitoring equipment (PCS rooms) are inside the HAW area fire barrier in separate rooms from the HAW process room.

For the LAW process vessels, a similar LAW PVVS provides similar functions (dilution air supply and filtration). The LAW PVVS is not a Safety Significant SSC and is not included in this evaluation.

A summary description is provided in Chapter 2, Section 2.6.2, with detailed system design specifications provided in the ventilation SDD (Ref. 22) and Engineering Standard 15889 (Ref. 23).

4.4.4.3 FUNCTIONAL REQUIREMENTS

The PVVS must accomplish the following functions:

- Provide dilution flow through the HAW vessels to maintain flammable gas concentration in the vapor space below 25% of the LFL to prevent explosions
- Provide for a dilution flow through the cementation drum to prevent explosions due to hydrogen accumulation in the drums while at the mixing station
- Provide filtration of airborne hazardous material from the HAW vessels after an explosion in the fluidic transfer pump charge vessel
- Continue operation during and after all design basis events to prevent explosions and to prevent release of airborne hazardous material

The functions must be maintained during specified modes when hazardous material is in the process vessels. The functional requirements for fire barriers and seismic qualification are DFs and will be included in the TSR and protected by ACs. All DFs are required to comply with the code of record version and/or applicable update including NFPA, and site/industry structural design criteria as specified in the SDD (Ref. 22), Engineering Standard 15889 (Ref. 23), and FHA (Ref. 12), and implemented through site programs and procedures, including surveillance, maintenance, and testing requirements.

The functional requirements for providing dilution flow and filtration for the HAW vessels, and dilution flow in the cementation drum process, will be protected through TSR LCOs and surveillance requirements (SRs). The LCOs will ensure operability requirements for the PVVS by providing operation, maintenance, testing, shutdown, and SRs and will ensure HEPA filter testing and SRs.

4.4.4.4 SYSTEM EVALUATION

In order for the PVVS to perform its Safety Significant functions to protect all workers, it must meet the design specifications, meet the assumptions, and provide the level of controls specified in the HA and supporting accident analyses as provided in Chapter 3. PVVS design, required flow, and response times in the TSR must support the time to LFL analysis and assumptions including inventory (maximum Material At Risk [MAR] in vessels – 6 kilograms of Am-241, the maximum MAR in the cementation drum – 45 grams of Am-241), the configuration of vessels and assumed head space (1 foot minimum [Ref. 9]), and the minimum required dilution flow as provided in Reference 19. Minimum head space assumptions are facilitated by the position/elevation of overflow line openings in each process vessel. Although other flammable gases can be present in the vessels (e.g., volatile organics) and will be considered in the final time to LFL calculation, the energy leading to maximum dispersion is bounded by the hydrogen model. The installed PVVS must have the SSCs verified and periodically evaluated for impairment of the safety functions for which it has been credited. Fire events, explosion events, and NPH events are described in Chapter 3.

Significant vulnerabilities to the PVVS are those that produce impairment to the flow source or the flow path. A Safety Integrity Level (SIL) determination of the PVVS Safety Significant Instrumented System (SSIS) was performed to ensure instrumented safety functions reliability (Ref. 24). The layer of protection analysis was used with a goal frequency of 1E-04. Two SSISs are required to ensure dilution flow to the PVVS process vessels. One PVVS SSIS acts to keep suction on the system (by starting the standby fan) and the other SSIS assures that the flow path is not blocked (by alarming and having an operator response to switch to the standby HEPA filters). The SSIS, to assure suction is kept on the exhaust, will need to be designed to a minimum of a SIL-2 level (redundancy for a fault tolerance of 1, and a risk reduction factor of 278). The SSIS to assure that the flow path is open will need to be designed to a minimum SIL-1 level (fault tolerance of 0, and a risk reduction of 17). PVVS SSIS logic solvers are contained in the robustly constructed PCS rooms (described in Chapter 2, Section 2.5.7), which are within the HAW area PC-3+ seismically qualified, 3-hour firewall. The SSIS components have backup power capability through the diesel generator and support process monitoring in the event of a

power failure. The PCS rooms are protected by the HAW area seismic firewall (Section 4.4.1.2) and fire suppression system.

The capability of the PVVS to meet performance criteria could be impaired by exceptionally long or intense fires, BDBA NPH events, design non-compliance or modification of any part of the system needed for operability or seismic qualification, or non-safety SSCs causing damage to credited SSCs.

Vulnerabilities leading to the impairment of the PVVS are most significant due to the potential consequences for fires, seismic events, or external events. As described in Subsection 4.4.1.4, intense fires and seismic events are precluded by the design requirements of the rooms that house the primary SSCs of the PVVS, including PC-3+ seismic, 3-hour fire barriers, and a minimal amount of installed combustibles. The PVVS, including fan and control functions, is designed to the PC-3+ seismic criteria. Part of the PVVS, including alternate connection and the exhaust duct to the exhaust stack, is vulnerable to external events (BDBA, stack falling, crane falling, etc.). The PVVS exhaust duct runs from the fan discharge in the process room area, under the WSB slab to the exterior of the building, then underground to the stack. Should the normal exhaust path (downstream of the HEPAs) or flow to the stack be impaired, an alternate connection provides a flow path and external flow source capability for the PVVS. The underground exhaust duct to the stack is necessary to provide the normal PVVS flow path and is considered a Safety Significant design function, protected through the TSR.

Vulnerabilities to PVVS exhaust flow and exhaust fans are reduced by the rigor and redundancy of the system design. In addition to the redundancy (parallel HEPA filter banks [manual changeout], flow dampers, controllers, sensors, and exhaust fans) the capability of an alternate exhaust path and flow capability is provided through the alternate connection. The alternate connection, located on the west side of the process building, provides an alternate flow path upstream of the main fans and control dampers and through the PVVS room wall.

Normal power to PVVS from the Savannah River Site (SRS) grid can be supplied through two independent paths to each of the two fans (one in operation, one in standby) or, in a loss of power event, are powered by a common Safety Significant backup diesel generator. Alternate flow capability does not rely on either normal or backup power supply.

Another vulnerability is from a credible external event (small plane crash, etc.) that can impair PVVS support functions that originate external to the WSB such as normal operating power, diesel backup power, or the external duct (flow and flow path). Due to the separation of normal power (north end of WSB) and the diesel generator (west of WSB), and separation of the alternate connection (west of WSB) and the external duct to the stack (southeast of WSB) and building power lines being underground, an external event that could impact more than one location is not likely. A large plane crash is not credible and a small plane crash having an affect on the WSB is 2.36E-06 events per year (Ref. 17). Physical DFs, the Traffic Control Program, and the SWCP should protect the diesel generator and external duct from most (e.g., vehicle) external events.

Existing safety controls, in addition to those specified in Section 4.4.4.1, mitigating or preventing events described in this section (4.4.4.4) include the following:

- The design of the WBS structure – protects from spills and explosions
- The HAW area design – robust, seismically qualified SSCs, 3 hour fire walls
- The HAW piping, valves, and vessels – robust, seismically qualified SSCs. Pipes are corrosion resistant and detonation resistant to preclude spills/releases and explosions. Transfer lines and sample lines are jacketed outside process room, enclosure, and sample glovebox.
- The HAW process room and cementation area ventilation system – provides mitigation for energetic events
- ERP – protects all workers for most events by requiring appropriate response
- RPP – protects the immediate FW by preparation and monitoring for radiological events
- SWCP and the Traffic Control Program – protects PVVS by preventing external events
- The Hoisting and Rigging Program – protects WSB structures from impact with dropped loads and from inadvertent crane movement
- The configuration control program – protects SSC design from degradation or planned activities

4.4.4.5 TECHNICAL SAFETY REQUIREMENT CONTROLS

TSR LCOs will be provided to ensure that PVVS operability, control functions, flow/pressure monitoring, alarms, surveillances, maintenance, testing, and shutdown requirements for specified modes are maintained. The underground exhaust duct to the stack (DF) and the standby diesel generator (LCO) will be protected in the TSRs to ensure their Safety Significant PVVS support functions. Although the PVVS seismic and fire barrier requirements are passive DFs, they will be protected within the LCO and SRs for operability. HEPA filters, including design and efficiency specifications, will be controlled as required through the WSRC 2Y Manual,

The configuration control program (site USQ Program [Ref. 13] and the Structural Integrity Program) ensures that no unreviewed changes occur to Safety Significant SSCs including DFs and that their function is maintained. This program requires that any design changes be reviewed to ensure that the credited control can continue to perform its Safety Significant function and that these features will not be affected by the proposed activity. As noted in DOE Order 420.1B (Ref. 14), configuration management assessments include the periodic review of system operability, reliability, and material condition during facility inspections required by DOE Order 433.1A (Ref. 15). These periodic reviews assess the ability of the PVVS to perform its design and safety functions.

4.4.5 HIGH ACTIVITY WASTE VENTILATION SYSTEMS – (HIGH ACTIVITY WASTE PROCESS ROOM VENTILATION, HIGH ACTIVITY WASTE CEMENTATION ENCLOSURE VENTILATION, HIGH ACTIVITY WASTE SAMPLE GLOVEBOX VENTILATION, AND LABORATORY GLOVEBOX VENTILATION)

The HAW ventilation system includes ventilation for the HAW process room, the HAW sample glovebox, the cementation area enclosure, and the laboratory glovebox. Each of these systems has its own HEPA filters, but all the systems are exhausted by the same set of redundant (one in operation, one on standby) fans that exhaust to the stack. The PVVS ventilation rooms, HAW support room, maintenance area, PCS rooms, personnel and electrical rooms, and cementation rooms are exhausted through the main building ventilation system. All of the primary HAW ventilation system (includes primary functions for the cementation enclosure and gloveboxes) controls, operational functions, and testing requirements are specified in the HAW process room ventilation LCOs and surveillances that ensure the flow source (fans are operational). Because the primary function of the enclosure and glovebox ventilation is to protect the FWs, local requirements (enclosure and gloveboxes - e.g., face velocity, pressure, HEPA monitoring, and testing) should be specified and controlled in conjunction with the RPP.

4.4.5.1 <u>High Activity Waste Process Room Ventilation System</u>

4.4.5.1.1 SAFETY FUNCTION

The Safety Significant function of the HAW process room ventilation system is to limit the consequences to the FW outside the HAW process room from leaks/spills and releases from explosion explosions in the HAW vessels or piping. The function is accomplished by the following:

- The HAW process room ventilation system provides filtration of airborne hazardous material in the event of a spill or vessel/ piping explosion in the HAW process room.
- The HAW process room ventilation system ductwork up through the first HEPA filter is qualified to PC-3+ seismic criteria so that during and after a seismic event, it continues to maintain a passive confinement function.

4.4.5.1.2 SYSTEM DESCRIPTION

The HAW process room ventilation system is the primary part of the HAW ventilation system and is a once through system. All of the other HAW process enclosures (sample glovebox, cementation enclosure, and laboratory glovebox) have their own dedicated HEPA filtration and their exhaust ducts tie into the HAW process room ventilation system exhaust duct down stream of the HEPA filtration.

The exhaust from the HAW process room ventilation system passes through dedicated HEPA filtration before being exhausted out of the stack. Because seismically qualified HAW process equipment is credited for confinement during and after NPH events, the components in the HAW process room exhaust train are not required to remain operational following a seismic event.

Components in the HAW process room ventilation system up to and including the first HEPA filter are PC-3+ seismically rated for position retention and would continue to serve a confinement function following the event. The HAW process room ventilation system air is exhausted through two stages of HEPA filters. Three rows of HEPA filters are provided such that two HEPA rows are operating while the third is in standby for change-out in case of a problem with the operating HEPA set. Two direct drive fans installed in parallel provide motive force for the exhaust. A diesel generator (same diesel generator for the PVVS) provides back-up power in the event of the loss of normal power.

A summary description is provided in Chapter 2, Section 2.6.3, with detailed system description provided in Reference 25. Design specifications are provided in the ventilation SDD (Ref. 22).

4.4.5.1.3 FUNCTIONAL REQUIREMENTS

The HAW process room ventilation system must provide exhaust function/filtration to the HAW process room during and after loss of confinement and vessel/ piping explosions. The system design must be maintained to provide the active confinement function by ensuring exhaust flow through HEPA filtration. A passive confinement function must be maintained up through the first HEPA filter by the PC-3+ seismic design, during and after seismic events. The function is required during specified modes of operation when hazardous material is present in the process area.

The functional requirements are met by meeting the design specifications and by ensuring a negative pressure in the process areas. All DFs are required to comply with the code of record version and/or applicable update including NFPA and site/industry structural design criteria including those specified in the HAW system, building structures, and ventilation SDD (Ref. 9, 10, 22), and confinement ventilation Engineering Standard 15889 (Ref. 2).

The functional requirements for providing adequate flow to the HAW process room and for HEPA filter function (filtration) will be protected through TSR LCOs. The LCOs will ensure operability requirements for the process room ventilation by providing operation, maintenance, testing, shutdown, and SRs and will ensure HEPA function.

4.4.5.1.4 SYSTEM EVALUATION

In order for the HAW process room ventilation system to perform its Safety Significant function to protect the worker, it must meet specifications of its design and of the assumptions, and must provide the level of controls specified in the HA and supporting accident analyses as provided in Chapter 3. The installed ventilation must have the SSCs verified and periodically evaluated for impairment of the safety functions for which it has been credited. Spill and explosion events are described in Chapter 3.

The capability of the HAW process room ventilation system to meet performance criteria could be impaired by intense fires, seismic events, design non-compliance or modification, inadequate air flow, or filter efficiency degradation.

Normal power to the HAW process room ventilation system from the SRS grid can be supplied through two independent paths to each of the two fans (one in operation, one in standby) or, in a loss of power event, are powered by a common backup diesel generator. Monitoring and control instrument functions are provided through the PCS subsystem (Chapter 2, Section 2.5.7).

Vulnerabilities leading to impairment of the process room ventilation system are most significant due to potential consequences for significant process line explosions and intense fires that could damage the system. The system, although it would continue to function for most energetic events, is not required to function in a seismic event. As described in Subsections 4.4.1.4 and 4.4.2.4, the design requirements of the process room that houses much of the process room ventilation, and the process pipe and vessel design (detonation [Ref. 22, 19]) would mitigate many of the energetic events that could challenge the function of the SSC.

Explosions in the process vessels are prevented or mitigated by the seismically qualified PVVS. Consequences of releases due to explosions in pipes are mitigated by the HAW process room ventilation system.

In an intense fire scenario any of the ventilation components required for active operation could fail if the fire suppression system or FPP does not mitigate the fire. During fires passive confinement and filtration would continue through the main ventilation confinement boundary provided by the seismic qualification of the ventilation ductwork and the HEPA filter. Since the safety function of the process room ventilation is to protect FWs, and any significant fire or seismic event requires appropriate response (ERP and FPP), increased FWs consequences would not be expected.

Existing safety controls, in addition to those specified in Section 4.4.5.1.1, mitigating or preventing events described in this section (4.4.5.1.4) include the following:

- The design of the WBS structure – protects from spills and explosions
- The HAW piping, valves, and vessels – provides robust, seismically qualified SSCs. Pipes are corrosion resistant and detonation resistant to preclude spills/releases and explosions. Transfer lines and sample lines are jacketed outside process room, enclosure, and sample glovebox.
- The seismically qualified PVVS – removes airborne hazardous material from the process vessels during and after fire, explosion, and seismic events
- The ERP – protects all workers for most events by requiring appropriate response
- The configuration control program – protects SSC design from degradation or planned activities

4.4.5.1.5 TECHNICAL SAFETY REQUIREMENT CONTROLS

TSR LCOs will be provided to ensure that process room ventilation operability, control functions, flow/pressure monitoring, alarms, surveillances, maintenance, testing, and shutdown requirements for specified modes are maintained. TSR LCOs will be provided to ensure that HEPA filters are functional (provide filtration), specific efficiency in the primary HEPA filters

are credited only for process room spills and HAW process room vessel fluidic pump explosions. HEPA filters, including design and efficiency specifications, will be controlled as required through the WSRC 2Y Manual, HEPA Filter Program Manual, processes (Ref. 26).

The configuration control program (site USQ Program [Ref. 13] and the Structural Integrity Program) ensures that no unreviewed changes occur to Safety Significant SSCs including DFs and that their function is maintained. This program requires that any design changes be reviewed to ensure that the credited control can continue to perform its Safety Significant function and that these features will not be affected by the proposed activity. As noted in DOE Order 420.1B (Ref. 14), configuration management assessments include periodic review of system operability, reliability, and material condition during facility inspections required by DOE Order 433.1A (Ref. 15). These periodic reviews assess the ability of the HAW process room Ventilation system to perform its design and safety functions.

4.4.5.2 High Activity Waste Cementation Enclosure Ventilation System

4.4.5.2.1 SAFETY FUNCTION

The Safety Significant function of the HAW cementation enclosure ventilation system is to limit airborne consequences to the FWs during and after spills inside the enclosure. The function is accomplished by providing filtration of airborne hazardous material.

The HAW cementation enclosure (Section 4.4.8) provides protection to the immediate FW from direct contact with the spill, and the HAW cementation enclosure ventilation system provides protection to the worker away from the enclosure due to airborne hazardous material from the spill.

4.4.5.2.2 SYSTEM DESCRIPTION

The HAW cementation enclosure ventilation system is required to protect the FW from material released inside the enclosure. Air sweeps the airborne hazardous contaminants in the enclosure through the stainless steel exhaust paths, and dedicated HEPA filtration, that tie into the HAW ventilation system down stream of the HAW process room HEPA filters, and then is directed out of the WSB to the external exhaust stack. The HAW cementation enclosure ventilation system supports safety features of the enclosure. These features include the enclosure integrity, flow/pressure, environment, ductwork, and filtration requirements. Structural description, design specifications, and requirements for the enclosure and gloveboxes are provided in Section 4.4.8.

A summary description is provided in Chapter 2, Section 2.6.3, the FDD (Ref. 7), and detailed design specifications are provided in the ventilation SDD (Ref. 22), including ventilation Engineering Standard 15889 (Ref. 23).

4.4.5.2.3 FUNCTIONAL REQUIREMENTS

The HAW cementation enclosure ventilation system supports safety features of the HAW cementation enclosure. The ventilation system is required to maintain flow such that confinement and filtration is provided for airborne hazardous material. A confinement barrier is provided by exterior surfaces of the enclosure. Ventilation systems are provided to mitigate airborne releases. The enclosure ventilation function is verified through meeting ventilation pressure and flow requirements at openings, HEPA filters, glove ports, and doors.

All site/industry structural design criteria are to be met, including those specified in the HAW system and building ventilation SDDs (Ref. 9, 22), including confinement ventilation Standard 15889 (Ref. 23).

The functional requirements for providing adequate flow to the cementation enclosure and for HEPA filter function will be protected through the HAW process room ventilation TSR LCOs, SRs, and the RPP. The LCOs will ensure the operability requirements for the cementation ventilation flow source and the RPP should ensure operability and worker protection by providing operation, maintenance, testing, shutdown, and surveillance and testing requirements.

4.4.5.2.4 SYSTEM EVALUATION

In order for the HAW cementation enclosure ventilation system to perform its Safety Significant function to protect the worker, it must meet design specifications and meet the assumptions and provide the level of controls specified in the HA and supporting accident analyses as provided in Chapter 3. The installed ventilation systems must have the SSCs verified and periodically evaluated for impairment of the safety functions for which they have been credited. Spill events are described in Chapter 3.

The capability of the HAW cementation enclosure ventilation system to meet performance criteria could be impaired by design non-compliance or modification, inadequate air flow, or filter degradation. Major events (seismic, explosion, or fire) that preclude the safety functions would result in immediate appropriate response by FWs.

Existing safety controls, in addition to those specified in Section 4.4.5.2.1, mitigating or preventing events described in this section (4.4.5.2.4) include the following:

- HAW Cementation Enclosure - contains spills inside the enclosure
- RPP – protects the immediate FW by preparation and monitoring for radiological events
- ERP – protects all workers for most events by requiring appropriate response
- Configuration control program – protects all safety SSCs from degradation and planned activities

4.4.5.2.5 TECHNICAL SAFETY REQUIREMENT CONTROLS

TSR LCOs will be provided to ensure that process room ventilation operability, control functions, flow/pressure monitoring, alarms, surveillances, maintenance, testing, and shutdown requirements for specified modes are maintained. TSR LCOs will be provided to ensure that HEPA filters are functional (provide filtration). HEPA filters, including design and efficiency specifications, will be controlled as required through the site 2Y manual, HEPA Filter Program Manual, processes (Ref. 26).

The configuration control program (site USQ program [Ref. 13] and the Structural Integrity Program) ensures that no unreviewed changes occur to Safety Significant SSCs including DFs and that their function is maintained. This program requires that any design changes be reviewed to ensure that the credited control can continue to perform its Safety Significant function and that these features will not be affected by the proposed activity. As noted in DOE Order 420.1B (Ref. 14), configuration management assessments include the periodic review of system operability, reliability, and material condition during facility inspections required by DOE Order 433.1A (Ref. 15). These periodic reviews assess the ability of the HAW cementation enclosure ventilation system to perform its design and safety functions.

4.4.5.3 High Activity Waste Sample Glovebox Ventilation System

4.4.5.3.1 SAFETY FUNCTION

The Safety Significant function of the HAW sample glovebox ventilation system is to limit airborne consequences to the FWs for glovebox spills. The function is accomplished by providing filtration of airborne hazardous material.

4.4.5.3.2 SYSTEM DESCRIPTION

The HAW sample glovebox ventilation system is required to protect the FW from airborne hazardous material release from inside the glovebox. Air sweeps the airborne contaminants in the enclosure through the stainless steel exhaust paths, and dedicated HEPA filtration, that tie into the HAW active confinement system down stream of the HAW process room HEPA filters, and then is directed out of the WSB to the external exhaust stack. The HAW sample glovebox ventilation system supports safety features of the glovebox. These features include the glovebox integrity, flow/pressure, environment, ductwork, and filtration requirements. Structural description, design specifications, and requirements for the glovebox are provided in Section 4.4.8.

A summary description is provided in Chapter 2, Section 2.6.3, the FDD (Ref. 7), and detailed design specifications are provided in the ventilation SDD (Ref. 22), including ventilation Engineering Standard 15889 (Ref. 23).

4.4.5.3.3 FUNCTIONAL REQUIREMENTS

The HAW sample glovebox ventilation system supports safety features of the sample glovebox. The ventilation is required to maintain ventilation flow such that confinement and filtration is provided for airborne radioactive material from inside the glovebox. A confinement barrier is provided by exterior surfaces of the glovebox.

The glovebox ventilation function is verified through meeting ventilation pressure and flow requirements at openings, HEPA filters, glove ports, and doors. During normal operations, the confinement integrity of the glovebox must be maintained to prevent spills/leaks from directly impacting the immediate FW.

All site/industry structural design criteria are to be met, including those specified in the HAW system and building ventilation SDDs (Ref. 9, 22), including confinement ventilation Engineering Standard 15889 (Ref. 23).

The functional requirements for providing adequate flow to the glovebox and for HEPA filter function will be protected through the HAW ventilation TSR LCOs, SRs, and the RPP. The LCOs/SRs will ensure the operability requirements for the glovebox ventilation flow source, and the RPP will ensure worker protection by providing monitoring and personnel preparation.

4.4.5.3.4 SYSTEM EVALUATION

In order for the HAW sample glovebox ventilation system to perform its Safety Significant function to protect the worker, it must meet design specifications and meet the assumptions and provide the level of controls specified in the HA and supporting accident analyses as provided in Chapter 3. The installed ventilation systems must have the SSCs verified and periodically evaluated for impairment of their safety functions for which they have been credited. Spill events are described in Chapter 3.

The capability of the HAW sample glovebox ventilation system to meet performance criteria could be impaired by design non-compliance or modification, inadequate air flow, or filter efficiency degradation. Major events (seismic, explosion, or fire) that preclude the safety functions would result in immediate appropriate response by the FWs.

Existing safety controls, in addition to those specified in Section 4.4.5.3.1, mitigating or preventing events described in this section (4.4.5.3.4) include the following:

- HAW sample glovebox - contains spills inside the glovebox
- RPP – protects the immediate FW by preparation and monitoring for radiological events
- ERP – protects all workers for most events by requiring appropriate response
- Configuration control program – protects all safety SSCs from degradation and planned activities

4.4.5.3.5 TECHNICAL SAFETY REQUIREMENT CONTROLS

TSR LCOs will be provided to ensure that process room ventilation operability, control functions, flow/pressure monitoring, alarms, surveillances, maintenance, testing, and shutdown requirements for specified modes are maintained. TSR LCOs will be provided to ensure that filters are functional (provide filtration). HEPA filters, including design and efficiency specifications, will be controlled as required through the WSRC 2Y Manual, HEPA Filter Program Manual, processes (Ref. 26).

The configuration control program (site USQ program [Ref. 13] and the Structural Integrity Program) ensures that no unreviewed changes occur to Safety Significant SSCs including DFs and that their function is maintained. This program requires that any design changes be reviewed to ensure that the credited control can continue to perform its Safety Significant function and that these features will not be affected by the proposed activity. As noted in DOE Order 420.1B (Ref. 14), configuration management assessments include the periodic review of system operability, reliability, and material condition during facility inspections required by DOE Order 433.1A (Ref. 15). These periodic reviews assess the ability of the HAW sample glovebox ventilation system to perform its design and safety functions.

4.4.5.4 Laboratory Glovebox Ventilation System

4.4.5.4.1 SAFETY FUNCTION

The Safety Significant function of the laboratory glovebox ventilation system is to limit consequences to the immediate FW for glovebox spills. The function is accomplished by providing filtration of airborne hazardous material.

4.4.5.4.2 SYSTEM DESCRIPTION

The laboratory glovebox ventilation system is required to protect the FW from airborne hazardous material released from inside the glovebox. Air sweeps the airborne contaminants in the enclosure through the stainless steel exhaust paths, and dedicated HEPA filtration, that tie into the HAW active confinement system down stream of the HAW process room HEPA filters, and then is directed out of the WSB to the external exhaust stack. The design specifications include the glovebox integrity, flow/pressure, environment, glove port, door, ductwork, and filtration requirements. Structural description, design specifications, and requirements for the glovebox are provided in Section 4.4.8.

A summary description is provided in Chapter 2, Sections 2.6.3, the FDD (Ref. 7), and detailed design specifications are provided in the ventilation SDD (Ref. 22), including ventilation Engineering Standard 15889 (Ref. 23).

4.4.5.4.3 FUNCTIONAL REQUIREMENTS

The laboratory glovebox ventilation system supports safety features of the laboratory glovebox. The ventilation is required to maintain ventilation flow such that confinement and filtration is provided for airborne hazardous material inside the glovebox. A confinement barrier is provided by exterior surfaces of the glovebox (credited Safety Significant control, see Section 4.4.8).

The glovebox ventilation function is verified through meeting the ventilation pressure and flow requirements at openings, HEPA filters, glove ports, and doors. During normal operations, the confinement integrity of the glovebox must be maintained to prevent spills/leaks from directly impacting the FWs.

All site/industry structural design criteria are to be met, including those specified in the HAW system, building ventilation, and laboratory SDDs (Ref. 9, 22, 27), including confinement ventilation Engineering Standard 15889 (Ref. 23).

The functional requirements for providing adequate flow to the glovebox and for HEPA filter function will be protected through the HAW process room ventilation system TSR LCOs, SRs, and the RPP. The LCOs/SRs will ensure the operability requirements for the glovebox ventilation flow source, and the RPP will ensure worker protection by providing monitoring and personnel preparation.

4.4.5.4.4 SYSTEM EVALUATION

In order for the laboratory glovebox ventilation system to perform its Safety Significant function to protect the worker, it must meet design specifications and meet the assumptions and provide the level of controls specified in the HA and supporting accident analyses as provided in Chapter 3. The installed ventilation systems must have the SSCs verified and periodically evaluated for impairment of the safety functions for which they have been credited. Spill events are described in Chapter 3.

The capability of the laboratory glovebox ventilation system to meet performance criteria could be impaired by design non-compliance or modification, inadequate air flow, or filter efficiency degradation. Major events (seismic, explosion, or fire) that preclude the safety functions would result in immediate appropriate response by the FWs.

Existing safety controls, in addition to those specified in Section 4.4.5.4.1, mitigating or preventing events described in this section (4.4.5.4.4) include the following:

- Laboratory glovebox - contains spills inside the glovebox
- RPP – protects the immediate FW by preparation and monitoring for radiological events
- ERP – protects all workers for most events by requiring appropriate response
- Configuration control program – protects all safety SSCs from degradation and planned activities

4.4.5.4.5 TECHNICAL SAFETY REQUIREMENT CONTROLS

TSR LCOs will be provided to ensure that glovebox ventilation operability, control functions, flow/pressure monitoring, alarms, surveillances, maintenance, testing, and shutdown requirements for specified modes are maintained. TSR LCOs will be provided to ensure that HEPA filters are functional (provide filtration). HEPA filters, including design and efficiency specifications, will be controlled as required through the WSRC 2Y Manual, HEPA Filter Program Manual, processes (Ref. 26).

The configuration control program (site USQ program [Ref. 13] and the Structural Integrity Program) ensures that no unreviewed changes occur to Safety Significant SSCs including DFs and that their function is maintained. This program requires that any design changes be reviewed to ensure that the credited control can continue to perform its Safety Significant function and that these features will not be affected by the proposed activity. As noted in DOE Order 420.1B (Ref. 14), configuration management assessments include the periodic review of system operability, reliability, and material condition during facility inspections required by DOE Order 433.1A (Ref. 15). These periodic reviews assess the ability of the laboratory glovebox ventilation system to perform its design and safety functions.

4.4.6 HIGH ACTIVITY WASTE AREA AND CEMENTATION AREA FIRE SUPPRESSION SYSTEMS

4.4.6.1 SAFETY FUNCTION

The Safety Significant function for the HAW area and cementation area fire suppression systems is to limit the consequences to all workers for the HAW process room fire and to the FWs for a fire in the cementation area. The systems accomplish this function by mitigating fires so that a significant release does not occur.

4.4.6.2 SYSTEM DESCRIPTION

The HAW Area and cementation area fire suppression systems are automatic wet-pipe sprinkler systems. The systems are part of a general building wide fire suppression system. Ordinary and/or intermediate temperature rated sprinkler heads are located in the facility as appropriate per NFPA requirements (Ref. 28). The WSB is classified as a mixed occupancy facility with a H-4 (health-hazard) and Group F-2 (factory industrial low-hazard) classification per the International Building Code and as special purpose industrial occupancy per NFPA 101 (Ref. 29).

The HAW Area and cementation area Fire Suppression Systems are supplied water by the F-Area fire water loop. This water source is an NFPA compliant reliable system, and its function is ensured through the Safety Significant FPP Safety Management Program.

A summary description is provided in Chapter 2, Section 2.7.3, the FHA (Ref. 12), and detailed design specifications are provided in the Balance of Plant SDD (Ref. 30), and Fire Protection Guide 01120-G (Ref. 31).

4.4.6.3 FUNCTIONAL REQUIREMENTS

The HAW area and cementation area fire suppression systems are required to operate with sufficient reliability in order to prevent small fires from becoming large fires that result in a significant release of hazardous material from the HAW process vessels and the cementation area. Sufficient reliability is ensured through meeting NFPA design, operation, testing and maintenance requirements, and by having a formal Safety Significant (through the FPP) interface control (ensures fire water supply meets NFPA requirements) with the organization providing the water supply. The function is required during specified modes of operation when hazardous material is present in the HAW process room or cementation area. The sprinkler systems are not required to function during or following a NPH event.

The functional requirements for ensuring the operability of the fire suppression systems will be protected through TSR LCOs. The LCOs will define the operability for specified modes by providing operation, fire detection, instrumentation, alarms, surveillance, testing, and maintenance requirements. Reliability of the fire suppression water supply is provided through the FPP.

4.4.6.4 SYSTEM EVALUATION

Periodic inspection and testing of the fire suppression system is performed in accordance with approved WSRC procedures which are based on applicable portions of the NFPA codes. Routine inspections and minor maintenance of the suppression equipment are performed by personnel who are fully qualified in this task and trained in the proper operation and functioning of the fire protection equipment as required by WSRC Procedure Manual 2Q (Ref. 32). Chapter 2, Section 2.7.3, and Chapter 7 of this PDSA provide detail on the system and FPP.

The capability of the fire suppression system to meet performance criteria could be impaired by factors such as seismic events, inadequate water supply, or sprinkler head performance due to inadequate function or by building activities preventing the design delivery/coverage.

The fire suppression system is not credited during or after seismic events. The PC-3+ (seismic, PC-3 for other NPH events) qualified building shell, limited process footprint inside the HAW fire barrier, limited combustible design, no storage of flammable gas (largest cause of seismic fires in industry) in the HAW process room, seismically credited fire barriers, and limited transient combustibles all contribute to the conclusion that a seismically-initiated fire in the process room sufficient to cause a significant release of HAW material is not a credible DBA (see Subsection 4.4.1.4 and Reference 33).

The fire system water supply meets NFPA requirements, including the redundancy of supply capability (three supply pumps), to meet the demands of both the proposed automatic sprinkler system and the manual fire fighting needs of the SRS Fire Department (Ref. 29, 34). The system,

including fire pumps, flow capability, and operation are compliant with NFPA 70 and tested and inspected accordingly. The WSB Safety Significant fire suppression system boundary is at the first valve just inside the WSB. The supply source boundary starts at this valve and is NFPA compliant. The water supply to the fire suppression system is provided and maintained through the WSRC Infrastructure and Services Division, and its function is ensured through the Safety Significant FPP Safety Management Program. The integrity and operability of the water source, as required by NFPA design, operation, maintenance, and testing, including commensurate interaction and coordination requirements between WSB and Infrastructure and Services is defined and assured through the WSB FPP. SRS Fire Department facilities/response capability is within 2.5 miles on well maintained roads and is staffed to meet the SRS baseline needs assessment (Ref. 34).

Building power is not required for the fire suppression system to perform its function. Water supply is ensured through normal and alternate power powered pumps, and backup diesel generator powered pumps. Reliability of the fire suppression system water supply is provided through the FPP. Monitoring and alarm functions are provided.

Existing safety controls, in addition to those specified in Section 4.4.6.1, mitigating or preventing events described in this section (4.4.6.4) include the following:

- The robust design of the WSB, HAW process room, including fire barriers qualified to PC-3+ seismic criteria, low combustible design, and no flammable gases or liquids limits fire propagation.
- The PVVS provides filtration of airborne hazardous material from the HAW vessels during and after a fire or seismic event protecting all workers.
- The FPP limits transient combustibles, provides training and procedures for surveillance and response, and ensures water supply availability, thereby, protecting all workers.
- The ERP protects all workers for most events by requiring appropriate response.
- The configuration control program protects all safety SSCs from degradation and planned activities.

4.4.6.5 TECHNICAL SAFETY REQUIREMENT CONTROLS

The HAW Area and cementation area fire suppression systems must be operational to protect all workers from the consequences of fire events. An LCO will ensure that the HAW area and cementation area fire suppression systems are capable of performing their safety functions during all modes of operation, shutdown, and maintenance whenever HAW liquid waste is present in the HAW area or cementation area. The LCOs will define operability by providing operation, instrumentation, surveillance, testing, and maintenance requirements. Annual visual inspections of the sprinkler pipe, fittings, and heads, as well as an annual functional test of the main system, including the drain function, ensure continued operability.

The system is required to comply with the code of record version and/or applicable update NFPA code requirements in the areas of design, installation, surveillance, inspection, testing, and maintenance, with the exception of identified deficiencies that are processed according to the

provisions of the site-wide fire protection compliance assessment program. Design requirements and specifications including NFPA, and site/industry structural design criteria including those specified in the SDD (Ref. 30), and Guide 01120-G (Ref. 31) are to be met.

The configuration control program (site USQ program [Ref. 13] and the Structural Integrity Program) ensures that no unreviewed changes occur to Safety Significant SSCs including DFs and helps to ensure that their function is maintained. This program requires that any design changes be reviewed to ensure that the credited control can continue to perform its Safety Significant function and that these features will not be affected by the proposed activity. As noted in DOE Order 420.1B (Ref. 14), configuration management assessments include periodic review of system operability, reliability, and material condition during facility inspections required by DOE Order 433.1A (Ref. 15). These periodic reviews assess the ability of the HAW area and cementation area fire suppression systems to perform their design and safety functions.

4.4.7 HIGH ACTIVITY WASTE AND LOW ACTIVITY WASTE EVAPORATOR HIGH STEAM PRESSURE AND HIGH TEMPERATURE INTERLOCKS

4.4.7.1 SAFETY FUNCTION

The Safety Significant function of the HAW evaporator and LAW evaporator high steam pressure and high temperature interlocks is to prevent the consequences to all workers for a HAW evaporator event and the immediate FW for a LAW evaporator event from an explosion. The function is accomplished by the following:

- The evaporator high steam pressure interlocks prevent the evaporator steam coil pressure from exceeding 25 pounds per square inch, gauge (psig), which prevents the temperature from exceeding that required for rapid decomposition of tri-n-butyl phosphate TBP into a flammable gas.
- The evaporator high temperature interlocks prevent the evaporator temperature from exceeding 130 degrees Celsius (º C), the temperature required for rapid decomposition of TBP into a flammable gas.

4.4.7.2 SYSTEM DESCRIPTION

The HAW evaporator and LAW evaporator include high steam pressure and high temperature interlocks that concurrently alarm and isolate the steam supply to the evaporator under upset conditions. The temperature and steam pressure of the evaporator are constrained to 130° C and 25 psig (i.e., saturated steam pressure corresponding to 130° C), respectively. The steam pressure constraint also protects against evaporator over-pressurization. The interlocks fail safe to isolate the steam to the evaporator. The control features and alarms associated with the interlocks are independent of the process controllers. The control feature to prevent the evaporator from exceeding the temperature limitation is separate from the control feature to prevent the evaporator steam coil from exceeding the pressure limitation.

A summary description is provided in Chapter 2, Section 2.7.1, the FDD (Ref. 7), and detailed design specifications are provided in the HAW and LAW system SDDs (Ref. 9, 35). Reference 36, Piping and Instrumentation Drawing, shows the arrangement of the temperature and pressure interlocks.

4.4.7.3 FUNCTIONAL REQUIREMENTS

The HAW Evaporator and LAW Evaporator high steam pressure and high temperature interlocks are required to operate to maintain steam and temperature parameters in the evaporators to preclude the conditions for rapid decomposition of TBP into a flammable gas, with sufficient reliability to prevent the event. The function is required during specified modes of operation when the evaporators are operating. The functional requirement of the evaporator pressure interlocks is to prevent the evaporator stream coil pressure from exceeding 25 psig, thus, preventing the temperature from exceeding that required for rapid decomposition of TBP into a flammable gas, 130° C (Ref. 28, 9). The functional requirement of the evaporator temperature interlocks is to prevent the evaporator temperature from exceeding that required for rapid decomposition of TBP into a flammable gas, 130° C, by interrupting the steam supply when the interlock trips at the temperature set point.

The SIL of the evaporator interlock systems meets the requirements specified in the SRS Engineering Guide 01703-G (Ref. 37) for SSISs. The HAW evaporator high steam pressure and high temperature interlocks are the two levels of control required by WSRC Procedure Manual E7, Procedure 2.25 (Ref. 5) to prevent the explosion. Based on an engineering calculation, the proper risk reduction is achieved by providing two independent, highly reliable, SIL-1 systems or a combined highly reliable SIL-2 system (HAW evaporator – LAW is only required to meet SIL-1, [Ref. 38]). Calibration and testing frequencies should ensure the function as a highly reliable instrumentation system.

The functional requirements for ensuring operability of the evaporator interlock systems will be protected through TSR LCOs. The LCOs will define operability for specified modes by providing operation, detection, alarm, surveillance, testing, and maintenance requirements.

4.4.7.4 SYSTEM EVALUATION

In order for the HAW evaporator and LAW evaporator high steam pressure and high temperature interlocks to perform their Safety Significant functions to protect the worker, they must meet design specifications, meet the assumptions and provide the level of controls specified in the HA and supporting accident analyses as provided in Chapter 3. The installed interlocks must have the SSCs verified and periodically evaluated for impairment of their safety functions for which they are credited. Explosion events are described in Chapter 3.

The capability of the evaporator interlocks to meet performance criteria could be impaired by design non-compliance or modification, fires, explosions, and seismic events. The design of the system will meet the requirements of Engineering Standard 01703 for SRS Non-Reactor Facilities (Ref. 39) and the guidance of Engineering Guide 01703-G, Design Guidance for Instrumented Systems that are used in Safety Significant and hazardous processes (Ref. 37),

which includes all NFPA requirements for fires and explosions. There is a steam pressure reduction valve (not credited) in the steam line leading to the heating coils of the evaporators (Ref. 24). This reduction valve will reduce the pressure to such a level that the evaporators will not be able to overheat and cause rapid decomposition of TBP into a flammable gas. Although the interlocks are not credited in NPH events, a subsequent failure in the steam system or interlock system would be expected to lower steam pressure/temperature. System surveillances on temperature and pressure (normal operating limits monitored and alarm response through annunciators in the control room) and/or response to a seismic event (ERP) would direct operators to take appropriate system action and/or worker response.

The steam and pressure SSIS primary logic and monitoring interface instrumentation is contained in the robustly constructed PCS room (described in Chapter 2, Section 2.5.7), which is within the HAW area PC-3+ seismic, 3-hour firewall. The PCS rooms contain critical steam and pressure interlock process controllers, data monitoring, acquisition and management software, and the SSIS logic controllers. SSIS subsystem components have backup power capability through either the diesel generator and facilitate process monitoring and safe system shutdown. The PCS rooms are protected by the HAW area fire barriers (Section 4.4.1.2) and fire suppression system. The WSB Waste Acceptance Criteria Program (WACP) (includes the MFFF/PDCF Waste Acceptance Criteria (WAC) as well as the WSB WAC) provides an independent safety function to limit the organic content (TBP) prior to transfer to the WSB to soluble levels to preclude conditions conducive to a runaway reaction.

Existing safety controls, in addition to those specified in Section 4.4.7.1, mitigating or preventing events described in this section (4.4.7.4) include the following:

- The robust design of the WSB and HAW process systems, including design to PC-3+ (seismic, PC-3 for the WSB in other NPH events) criteria and fire barriers provide protection to all workers. (HAW evaporator only)
- The HAW process room ventilation provides confinement of hazardous airborne hazardous material following an explosion event protecting all workers. (HAW evaporator only)
- The WACP (MFFF/PDCP WAC) limits the TBP content prior to transfer to the WSB.
- The ERP protects all workers for most events by requiring appropriate response.
- The configuration control program protects all safety SSCs from degradation and planned activities.

4.4.7.5 TECHNICAL SAFETY REQUIREMENT CONTROLS

The HAW evaporator and LAW evaporator high steam pressure and high temperature interlocks systems perform their required functions by ensuring that steam pressure in the coils and evaporator temperatures are maintained below 25 psig and 130º C respectively. TSR LCOs will be provided to ensure that the interlocks' operability, instrumentation, alarm functions, surveillances, maintenance, testing, and shutdown requirements for specified modes are maintained.

The system is required to comply with the code of record version in the areas of design, installation, surveillance, inspection, testing, and maintenance. Design requirements and site/industry structural design criteria including those specified in the SDD (Ref. 9, 35), and the SIL Interlock Determination (Ref. 38) are to be met.

The configuration control program (site USQ program [Ref. 13] and the Structural Integrity Program) ensures that no unreviewed changes occur to Safety Significant SSCs including DFs and helps to ensure that their function is maintained. This program requires that any design changes be reviewed to ensure that the credited control can continue to perform its Safety Significant function and that these features will not be affected by the proposed activity. As noted in DOE Order 420.1B (Ref. 14), configuration management assessments include periodic review of system operability, reliability, and material condition during facility inspections required by DOE Order 433.1A (Ref. 15). These periodic reviews assess the ability of the evaporator interlocks to perform their design and safety functions.

4.4.8 HIGH ACTIVITY WASTE CEMENTATION ENCLOSURE, HIGH ACTIVITY WASTE SAMPLE GLOVEBOX AND LABORATORY GLOVEBOX

4.4.8.1 High Activity Waste Cementation Enclosure

4.4.8.1.1 SAFETY FUNCTION

The Safety Significant function of the HAW cementation enclosure is to limit the consequences to the FWs for spills. The function is accomplished by the following:

- The HAW cementation enclosure contains spills inside the enclosure.

The HAW cementation enclosure provides protection to the immediate FW from direct contact with the spill.

4.4.8.1.2 SYSTEM DESCRIPTION

The HAW cementation enclosure provides confinement to protect the FWs in spill scenarios. The cementation enclosure provides confinement for HAW solutions that are piped from the HAW process room to the cementation area for blending with cement for stabilization and transport out of the WSB. The HAW solution and cement (cement is pre-filled in a 55-gallon drum) are blended and solidified in a 55-gallon drum inside the enclosure. The HAW Cementation Enclosure is designed to meet PC-3+ seismic criteria for position retention (Ref. 7). Design specifications include the enclosure integrity, ventilation flow/pressure, environment compatibility, glove port, door, ductwork, and filtration requirements.

The HAW Cementation Enclosure is Safety Significant and will be designed as a glovebox confinement system in accordance with the WSRC Procedure Manual 5Q Radiation Control Manual (Ref. 40), glovebox guide (Ref. 41) and specific design criteria (Ref. 9, 22, 35).

A summary description is provided in Chapter 2, Sections 2.6.6 and the FDD (Ref. 7), and detailed design specifications are provided in the HAW system, LAW system, ventilation SDDs, and Engineering Guide 13090-G (Ref. 9, 35, 22, 41).

4.4.8.1.3 FUNCTIONAL REQUIREMENTS

The functional requirements of the HAW cementation enclosure are to contain spilled material inside the enclosure. The barrier is provided by exterior surfaces that form the enclosure box, including panels, ports, and HEPA filters. During normal operations, the confinement integrity of the enclosure must be maintained to protect FWs. HEPA filters, including design and efficiency specifications, will be controlled as required through the WSRC 2Y Manual, HEPA Filter Program Manual, processes (Ref. 26).

Ventilation is a separate Safety Significant function for the HAW cementation enclosure and is described in Section 4.4.5. The function is required when hazardous material is present in the cementation area.

The system is required to comply with the code of record version and/or applicable update NFPA code requirements in the areas of design, installation, surveillance, inspection, testing, and maintenance, with the exception of identified deficiencies that are processed according to the provisions of the site-wide fire protection compliance assessment program. The design requirements and specifications including NFPA and site/industry structural design criteria including those specified in the SDD (Ref. 9, 35, 22), and Guide 13090-G (Ref. 41) are to be met.

4.4.8.1.4 SYSTEM EVALUATION

In order to meet the functional requirements, the HAW cementation enclosure must contain spills inside the enclosure. To accomplish the function the HAW cementation enclosure must meet design specifications and meet the assumptions and provide the level of controls specified in the HA and supporting accident analyses as provided in Chapter 3. The installed enclosure and gloveboxes must have the SSCs verified and periodically evaluated to ensure the safety functions for which it has been credited. Spill events are described in Chapter 3.

The capability of the enclosure to meet performance criteria could be impaired by intense fires, design non-compliance, modification of the structure, seismic, or other initiated damage.

The HAW cementation enclosure structure is contained within the PC-3+ seismically qualified fire barriers and is within the PC-3+ (seismic, PC-3 for other events) WSB shell. The enclosure will not be used for liquid HAW or hazardous material extended storage. A number of solidified HAW drums may be temporarily “in-process” and be in the cementation area. The only drum in liquid phase will be the drum connected to the PVVS. Building fire suppression is supplied in the cementation area.

The maximum total radionuclide inventory allowed outside the HAW process room is 420 grams of Am-241(Ref. 8). The cemented drums are assumed in the HA to have up to 45 grams of Am-241 (nominally they are expected to have 30 grams Am-241).

Existing safety controls, in addition to those specified in Section 4.4.8.1.1, mitigating or preventing events described in this section (4.4.8.1.4) include the following:

- Cementation area design – fire barriers designed to PC-3+ seismic criteria provide general protection for all workers for fire and NPH events
- Cementation enclosure ventilation system – protects FWs by providing confinement of airborne hazardous material
- Cementation area fire suppression system – protects FWs from fires
- FPP – protects FWs from fires
- ERP – protects all workers for most events by requiring appropriate response
- RPP – protects the immediate FW by preparation and monitoring for radiological events
- Configuration control program – protects all safety SSCs from degradation and evaluates planned activities

4.4.8.1.5 TECHNICAL SAFETY REQUIREMENT CONTROLS

The HAW cementation enclosure safety function is a passive DF, and the ability to perform its confinement function is controlled through the TSR. In addition, the function is verified through specific glovebox ventilation requirements designated in LCOs/SRs (Section 4.4.5), and by the RPP, which invokes the site WSRC Procedure Manual 5Q requirements (Ref. 40).

The configuration control program (site USQ program [Ref. 13] and the Structural Integrity Program) ensures that no unreviewed changes occur to Safety Significant DFs and that their function is maintained. This program requires that any design changes be reviewed to ensure that the credited control can continue to perform its Safety Significant function and the credited feature will not be affected by the proposed activity. As noted in DOE Order 420.1B (Ref. 14), configuration management assessments include the periodic review of system operability, reliability, and material condition during facility inspections required by DOE Order 433.1A (Ref. 15). These periodic reviews assess the credited components' ability to perform its design and safety functions.

4.4.8.2 <u>High Activity Waste Sample Glovebox</u>

4.4.8.2.1 SAFETY FUNCTION

The Safety Significant function of the HAW sample glovebox is to limit the consequences to the FWs for spills. The function is accomplished by the following:

- The HAW sample glovebox contains spills inside the enclosure.

The HAW sample glovebox provides protection to the immediate FW from direct contact with the spill, and the sample glovebox ventilation system (Section 4.4.5) provides protection to the worker away from the glovebox, due to airborne hazardous material from the spill.

4.4.8.2.2 SYSTEM DESCRIPTION

The HAW sample glovebox provides confinement to protect the FW in spill scenarios. The sample glovebox is located on the second level of the process support room inside the HAW area. The HAW process vessel samples are pulled in this glovebox to minimize exposure to FWs. The glovebox is designed to drain any leaked or spilled process solutions to the acid overflow tank. HAW samples are prepared in the sample gloveboxes and are transported by hand with secondary confinement through a dumbwaiter to the laboratory glovebox. Samples are tested to verify that process parameters are within specifications.

The glovebox is designed to meet NPH PC-2 (seismic) design criteria (Ref. 7). The glovebox has dedicated inlet and outlet HEPA filters and has an exhaust duct that ties into the HAW ventilation system. Design specifications include the glovebox integrity, ventilation flow/pressure, environment compatibility, glove port, door, ductwork, and filtration requirements.

The HAW sample glovebox is Safety Significant and will be designed as a glovebox confinement system in accordance with the WSRC Procedure Manual 5Q Radiation Control Manual (Ref. 40), glovebox guide (Ref. 41) and specific design criteria (Ref. 9, 22, 35).

A summary description is provided in Chapter 2, Sections 2.6.6, and the FDD (Ref. 7), and detailed design specifications are provided in the HAW system, ventilation SDDs, and Engineering Guide 13090-G (Ref. 9, 22, 41).

4.4.8.2.3 FUNCTIONAL REQUIREMENTS

The functional requirement of the HAW sample glovebox is to prevent spilled HAW solution from directly impacting the immediate FW. The barrier is provided by exterior surfaces of the glovebox, including panels and ports. During normal operations, the confinement integrity of the enclosure must be maintained to protect FWs. The function is required when hazardous material is present in the glovebox.

The system is required to comply with the code of record version and/or applicable update NFPA code requirements in the areas of design, installation, surveillance, inspection, testing, and maintenance, with the exception of identified deficiencies that are processed according to the provisions of the site-wide fire protection compliance assessment program. The design requirements and specifications including NFPA and site/industry structural design criteria including those specified in the SDD (Ref. 9, 35, 22), and Guide 13090-G (Ref. 41) are to be met.

4.4.8.2.4 SYSTEM EVALUATION

In order to meet the functional requirements, the HAW sample glovebox prevents spills and splashes of HAW liquid from impacting the FWs. To accomplish the function, the HAW sample glovebox enclosure must meet design specifications and meet the assumptions and provide the level of controls specified in the HA and supporting accident analyses as provided in Chapter 3. The installed glovebox must have the SSCs verified and periodically evaluated to ensure the safety functions for which it has been credited. Spill events are described in Chapter 3.

The capability of the glovebox to meet performance criteria could be impaired by intense fires, design non-compliance, modification of the structure, seismic, or other initiated damage.

The HAW sample glovebox structure is enclosed within PC-3+ seismically qualified fire barriers (sample glovebox is in the process support room, inside the HAW area) and all structures are within the PC-3+ WSB shell. The glovebox will not be used for hazardous material storage and will have "in-process" HAW samples (typically less than 10 each 10 ml samples) and, thus, are a risk only to the FWs. The HAW sample glovebox could have a considerably higher inventory in a process failure event, as described below.

The HAW sample glovebox has small (approximately 1/4 inch) jacketed lines (limits inventory and directs leaks in the core pipe to the HAW process room) entering the glovebox. Drain capability from the HAW sample glovebox to the acid overflow tank is provided.

The glovebox has inlet and outlet HEPA filters. The HAW sample glovebox exhausts to the HAW process room ventilation system. Maximum MAR for a spill inside the sample glovebox is assumed to be 120 gallons of HAW liquid from an inadvertent continuous flow (valve failure/break-off, etc.) from HAW process vessels over a 24 hour period (Ref. 8). A large volume from a spill in the HAW sample glovebox is not expected to remain in the glovebox due to immediate gravity feed drain which diverts liquid back to the Acid Overflow Tank. The HAW sample glovebox is designed to NPH PC-2 (seismic) criteria, and process support room is within the HAW area, thus, protected from NPH and most fire scenarios. The process support room is designed with the same low combustible design as the HAW process room. An event that causes dispersion of the glovebox material (seismic, spill, fire) will be contained (spill outside the glovebox flows to the process room) or mitigated (HAW fire suppression system, building HEPA ventilation).

Existing safety controls, in addition to those specified in Section 4.4.8.2.1, mitigating or preventing events described in this section (4.4.8.2.4) include the following:

- HAW area design – fire barriers designed to PC-3+ seismic criteria provide general protection for all workers for fire and NPH events
- HAW sample glovebox ventilation system – protects FWs by providing confinement of airborne hazardous material
- HAW area fire suppression system – protects FWs from fires
- FPP – limits combustibles and protects FWs
- ERP – protects all workers for most events by requiring appropriate response

- RPP – protects the immediate FW by preparation and monitoring for radiological events
- Configuration control program – protects all safety SSCs from degradation and evaluates planned activities

4.4.8.2.5 TECHNICAL SAFETY REQUIREMENT CONTROLS

The HAW sample glovebox safety function is a passive DF and the ability to perform its confinement function is controlled through the TSR. In addition, the function is verified through specific glovebox ventilation requirements designated in LCOs/SRs (Section 4.4.5), and by the RPP, which invokes the site WSRC Procedure Manual 5Q requirements (Ref. 40).

The configuration control program (site USQ program [Ref. 13] and the Structural Integrity Program) ensures that no unreviewed changes occur to Safety Significant DFs and that their function is maintained. This program requires that any design changes be reviewed to ensure that the credited control can continue to perform its Safety Significant function and the credited feature will not be affected by the proposed activity. As noted in DOE Order 420.1B (Ref. 14), configuration management assessments include the periodic review of system operability, reliability, and material condition during facility inspections required by DOE Order 433.1A (Ref. 15). These periodic reviews assess the credited components' ability to perform its design and safety functions.

4.4.8.3 Laboratory Glovebox

4.4.8.3.1 SAFETY FUNCTION

The Safety Significant function of the laboratory glovebox is to limit the consequences to the immediate FW for spills. The function is accomplished by the following:

- The laboratory glovebox prevents hazardous liquid from contacting workers.

4.4.8.3.2 SYSTEM DESCRIPTION

The laboratory glovebox provides confinement to protect the immediate FW in spill scenarios. The laboratory glovebox is located in the laboratory facilities section of the WSB. HAW samples from the HAW sample glovebox are transported, within a portable secondary containment device, via a dumbwaiter to the laboratory glovebox where they are diluted and processed. Samples are tested to verify that process parameters are within specifications.

The laboratory glovebox is designed to meet PC-2 (seismic) design criteria (Ref. 7). The glovebox has dedicated inlet and outlet HEPA filters and has an exhaust duct that ties into the HAW ventilation system. Design specifications include the glovebox integrity, ventilation flow/pressure, environment compatibility, glove port, door, ductwork, and filtration requirements.

The laboratory glovebox is Safety Significant , which will be designed as a glovebox confinement system in accordance with the WSRC Procedure Manual 5Q Radiation Control Manual (40. 37), glovebox guide (Ref. 41) and specific design criteria (Ref. 9, 22, 35).

A summary description is provided in Chapter 2, Sections 2.6.6 and the FDD (Ref. 7), and detailed design specifications are provided in the analytical laboratory system and ventilation SDDs, and Engineering Guide 13090-G (Ref. 27, 22, 41).

4.4.8.3.3 FUNCTIONAL REQUIREMENTS

The functional requirement of the laboratory glovebox is to prevent spilled HAW solution from directly impacting the immediate FW. The barrier is provided by exterior surfaces that form the glovebox, including panels and ports. During normal operations, the confinement integrity of the enclosure must be maintained to protect FWs. The function is required when hazardous material is present in the laboratory glovebox.

The system is required to comply with the code of record version and/or applicable update NFPA code requirements in the areas of design, installation, surveillance, inspection, testing, and maintenance, with the exception of identified deficiencies that are processed according to the provisions of the site-wide fire protection compliance assessment program. The design requirements and specifications including NFPA and site/industry structural design criteria including those specified in the SDD (Ref. 27, 22), and Guide 13090-G (Ref. 41) are to be met.

4.4.8.3.4 SYSTEM EVALUATION

In order to meet the functional requirements, the laboratory glovebox prevents spills and splashes of HAW liquid from impacting the immediate FW. To accomplish the function, the laboratory glovebox enclosure must meet design specifications and meet the assumptions and provide the level of controls specified in the HA and supporting accident analyses as provided in Chapter 3. The glovebox must have the SSCs verified and periodically evaluated to ensure the safety functions for which it has been credited. Spill events are described in Chapter 3.

The capability of the laboratory glovebox to meet performance criteria could be impaired by intense fires, design non-compliance, modification of the structure, seismic, or other initiated damage.

The laboratory glovebox structure is a robust structure designed to NPH PC-2 (seismic) criteria enclosed within the PC-3+ greater WSB shell. The MAR for accident consequence analysis is assumed to be up to 1 liter of HAW liquid or 2 grams of Am-241, and is not a high risk except to the immediate FW (Ref. 8).

The building fire suppression is functionally available (but not credited) through the building fire suppression system. The glovebox has inlet and outlet HEPA filters. The glovebox exhausts to the HAW ventilation system.

Existing safety controls, in addition to those specified in Section 4.4.8.3.1, mitigating or preventing events described in this section (4.4.8.3.4) include the following:

- WSB design – structure designed to PC-3+ criteria provides general protection for all workers for NPH events
- Laboratory glovebox ventilation system – protects FWs by providing confinement of airborne hazardous material
- FPP – limits combustibles and protects FWs
- ERP – protects all workers for most events by requiring appropriate response
- RPP – protects the immediate FW by preparation and monitoring for radiological events
- Configuration control program – protects all safety SSCs from degradation and evaluates planned activities

4.4.8.3.5 TECHNICAL SAFETY REQUIREMENT CONTROLS

The laboratory glovebox safety function is a passive DF, and the ability to perform its confinement function is controlled through the TSR. In addition, the function is verified through specific glovebox ventilation requirements designated in LCOs/SRs (Section 4.4.5), and by the RPP, which invokes the site WSRC Procedure Manual 5Q requirements (Ref. 40).

The configuration control program (site USQ program [Ref. 13] and the Structural Integrity Program) ensures that no unreviewed changes occur to Safety Significant DFs and that their function is maintained. This program requires that any design changes be reviewed to ensure that the credited control can continue to perform its Safety Significant function and the credited feature will not be affected by the proposed activity. As noted in DOE Order 420.1B (Ref. 14), configuration management assessments include the periodic review of system operability, reliability, and material condition during facility inspections required by DOE Order 433.1A (Ref. 15). These periodic reviews assess the credited components' ability to perform its design and safety functions.

4.4.9 DIESEL GENERATOR

4.4.9.1 SAFETY FUNCTION

The primary Safety Significant function of the diesel generator is to provide electric power to active Safety Significant controls when power is not available from the normal electric power supply. By providing electric power to the HAW PVVS and the HAW ventilation system, the diesel generator protects all workers during spill, explosion, external, and NPH events. This function is accomplished by the following:

- The diesel generator is capable of providing sufficient voltage to operate the PVVS and HAW ventilation system.

- The diesel generator is capable of responding automatically and rapidly upon a loss of normal electric power to the PVVS or HAW ventilation system.
- The diesel generator is qualified to PC-3+ NPH criteria so that during and after a NPH event the diesel generator will continue to maintain its capability to provide electric power to Safety Significant active SSCs.

4.4.9.2 SYSTEM DESCRIPTION

The diesel generator and support components are housed in the PC-3+ NPH qualified diesel-generator enclosure, which is west of WSB. The diesel generator is designed to provide 660 kilovolt ampere (kVA) of motor starting load at 40% power factor with less than 35% transient voltage dip. The standby power system is designed to come online within 60 seconds after loss of normal power and has diesel fuel capacity to run for seven days without refill. The following summary of the diesel generator system was taken from Reference 30. The major components of the diesel generator system are:

- a diesel engine
- a generator
- a control panel
- a fuel storage tank
- two automatic transfer switches
- starting battery supplies

The diesel engine is a 6-cylinder, 4-cycle, turbocharged, after-cooled engine rated to provide 150 kW at 1800 revolution per minute (rpm) and 40 °C ambient. It is a full compression ignition, single acting and water cooled engine. The engine and auxiliaries are sized for continuous operation for a period of 7 days. The engine is provided with panel-mounted gauges for oil pressure, fuel pressure, water temperature, engine rpm, oil pressure differential gauge, air cleaner vacuum gauge, lube oil temperature gauge and temperature alarms.

The generator is a 150-kW, 480Y/277 volt (V), 60-Hz, 0.8-PF, three-phase, WYE-grounded, diesel generator with a maximum 105 °C (standby rating) temperature rise above an ambient temperature of 40 °C. The generator insulation consists of Class F materials. At 140 °C total temperature, the life well exceeds 100,000 hours of full-load operation at rated maximum hot spot insulation temperature.

The diesel-generator control panel is a free-standing, NEMA 12 enclosure located adjacent to the diesel engine generator set in the diesel-generator enclosure. The panel contains an alternating current ammeter, alternating current volt meter, three-phase watt meter, frequency meter, hour meter, and a ± 5% voltage adjusting rheostat. The ammeter and voltmeter are wired through selector switches to read all three phases.

A 2,600-gallon fuel oil storage tank is installed as a sub-base to the diesel generator. The fuel tank is a double-wall construction conforming to UL-142. A drain valve is installed at the lowest point in the heel opposite the engine suction line for testing and draining the fuel oil storage tank.

A dipstick welded to the fill cap, for auxiliary fuel level check, and fuel level gauges are provided to monitor and maintain the fuel oil level. The fuel oil system is provided with a fill line piped to the outside of the engine enclosure and supplied with a shutoff valve.

Two Automatic Transfer Switches (ATS) are used for automatically (electrically operated) transferring loads between normal and standby power sources. Each ATS is rated at 480V alternating current, 3 Phase, 3 watts and 200 amps, and consists of a microprocessor control module, relays, and accessories. ATSs start the standby diesel generator upon loss of the normal power and transfer the connected load to the standby supply.

The starting battery supplies 24-V direct current control power to the diesel-generator control panel as well as the engine starter. The battery, main battery disconnect breaker, and battery charger are located within the diesel-generator enclosure. The starting battery has sufficient capacity to provide five consecutive starts of maximum cranking time. The battery charger is furnished to automatically hold the battery voltage at approximately 2.25V per cell (fully charged, unloaded).

4.4.9.3 FUNCTIONAL REQUIREMENTS

Upon loss of normal power, the diesel generator must accomplish the following functions:

- Provide sufficient electric power to operate the HAW PVVS and HAW ventilation system
- Come online within sixty seconds after loss of normal power
- Be capable of running for seven days without refill of fuel
- Continue operation during and after all design basis events to provide electric power to the HAW PVVS and HAW ventilation system

The diesel generator must be capable of performing these functions during specified modes when hazardous material is in the HAW area. Site and industry design criteria are specified in Reference 30. The functional requirements listed above will be protected through TSR LCOs and SRs. The LCOs will ensure operability requirements for the diesel generator by providing operation, maintenance, testing, and SRs.

4.4.9.4 SYSTEM EVALUATION

For the diesel generator to perform its Safety Significant functions to protect all workers, it must meet the design specifications and provide the level of controls specified in the HA and supporting accident analyses as provided in Chapter 3. Diesel generator design, required electric output, and response times will be protected in the WSB TSR and must support the credited HAW PVVS (Subsection 4.4.4) and HAW ventilation system (Subsection 4.4.5) safety functions.

Normal power can be supplied to the HAW PVVS and to the HAW ventilation system through two independent paths. In a loss of power event, electric power is supplied to these Safety Significant systems by the diesel generator. The most significant vulnerabilities to the diesel

generator are common mode failure events that could cause a loss of normal power and a loss of diesel generator capabilities.

Common mode failure events have been protected against by several attributes of the normal power supply and the diesel generator systems. First, the location of the diesel generator (west of WSB) is not in the vicinity of the normal power supply system (north of WSB). Second, normal power lines are underground. In addition, the diesel generator is designed and built to PC3+ seismic criteria. These attributes protect the WSB electric power supply from common mode failures (e.g., small plane crash, vehicle crash, or a seismically-induced loss of power).

Another vulnerability is an undetected condition in which the diesel generator would not be capable of providing sufficient electric power if normal power were to be interrupted. TSR SRs will be implemented to monitor for deterioration in the diesel fuel, to demonstrate operability of the ATSs, to demonstrate system response, and to monitor and replace the startup battery supplies.

A detected event that could cause sufficient damage to render the diesel generator system inoperable for an extended period (e.g., a vehicle crash into the diesel-generator enclosure) would also be a vulnerability. The Traffic Control Program and the SWCP protect the diesel-generator enclosure from most impact events. In addition, by locating the diesel-generator fuel tank underground, the fuel is protected from being involved in these events.

Existing safety controls, in addition to those specified in Section 4.4.4.9, mitigating or preventing events described in this section (4.4.4.9) include the following:

- ERP – protects all workers for most events by requiring appropriate response
- SWCP and the Traffic Control Program – protects the diesel generator by preventing external events
- Hoisting and Rigging Program – protects the diesel generator from impact with dropped loads and from inadvertent crane movement
- Configuration Control Program – protects SSC design from degradation of planned activities

4.4.9.5 TECHNICAL SAFETY REQUIREMENT CONTROLS

TSR LCOs will be provided to ensure that the diesel generator operability control functions, normal power monitoring, alarms, surveillances, maintenance, and testing requirements for specified modes are maintained. The configuration control program (site USQ Program [Ref. 13] and the Structural Integrity Program) ensures that no unreviewed changes occur to Safety Significant SSCs and that their function is maintained. This program requires that any design changes be reviewed to ensure that the credited control can continue to perform its Safety Significant function and that these features will not be affected by the proposed activity. As noted in DOE Order 420.1B (Ref. 14), configuration management assessments include the periodic review of system operability, reliability, and material condition during facility inspections required by DOE Order 433.1A (Ref. 15). These periodic reviews assess the ability of the diesel generator to perform its design and safety functions.

4.5 SPECIFIC ADMINISTRATIVE CONTROLS

The ACs that are candidates for being SACs are provided below. The rigor of development for these controls is commensurate with the facility and knowledge at the PDSA level. Detailed final design, operations, procedures, training, and administration have not been fully developed at this stage of the WSB project and no TSR document is provided. Although most of the information required for SAC specification (safety function, description, functional requirements, evaluation, and controls) by DOE-STD-3009-94 (Ref. 2) is addressed below, the format is not explicitly followed due to the detail and implementation information (procedures, training, and final design) being limited. A listing of the SAC candidates is provided in Table 4.5-1, including safety function or critical assumption, the accident for which the safety function was identified, the functional requirements, and the performance criteria. This list of candidates for SACs is meant to be conservative, and it is expected that the final set in the Documented Safety Analysis will be much more abbreviated.

SACs are ACs that provide a specific preventive or mitigative function for hazard or accident scenarios identified in the PDSA where the safety function has importance similar to, or the same as, the safety function of a safety SSC (e.g., discrete operator actions, combustible loading program limits, hazardous material limits protecting HA assumptions, or facility category [Ref. 1]). SACs provided below include those credited Safety Significant ACs that are either designated, during the development of the HAs or accident analyses, as the only control, the primary control, or as a secondary control for energetic or high consequence events (fire, explosion, NPH, external impact). Also included as candidates for SACs are significant or critical assumptions, such as inventory, MAR, waste constituents, etc., assumed in the HA and accident analyses.

4.5.1 RADIOLOGICAL PROTECTION PROGRAM

Three attributes from the RPP controls listed in the CHA (Ref. 8) have the Safety Significant function of limiting consequences to the immediate FW from contamination or exposure events. These are either the only control or the primary control for the specific contamination events, and are, thus, candidates for SACs. The function is accomplished by the following:

- All undiluted HAW samples are handled outside gloveboxes in a secondary (sample) container that prevents the primary sample container from releasing liquid in the event it is dropped while being handled outside of the glovebox.
- Procedures and equipment are specified to prevent a sample needle from puncturing hands (e.g., needle shroud, leather gloves, and tools for changing needles).

The safety function provided above will be controlled through a Directive Action SAC, with specific conditions when equipment is required. The need for designated protective equipment will be verified prior to transporting undiluted HAW samples and before using needle extraction/sampling systems. Procedures will be developed and training provided designating when and how to use the protective equipment.

The secondary sample container is the only control indicated for a spill in the laboratory, outside the glovebox. The secondary container prevents the immediate FW from the consequences of a spill of an undiluted HAW liquid sample outside the laboratory glovebox. The secondary container design should be such that liquid spilled from the primary container during transport in the laboratory (e.g., from the HAW sample glovebox to the laboratory glovebox) is not released from the secondary container due to falls, drops, bumps, etc. that may occur during transport. The secondary container will need to be leak-tight for impacts from several feet, highly portable (operator can easily carry without the size or weight impairing movement) and inspected and tested at designated frequencies. Should the secondary container fail outside the glovebox, the ERP requires immediate appropriate response.

The procedures and equipment that prevent the sample needle from contacting hands (e.g., needle shroud, leather gloves, and tools for changing needles) are the only controls indicated for a contamination event involving a skin puncture (immediate FW) during glovebox operation (Ref. 7). The procedures and equipment prevent the sampling needles from contacting the hand during glovebox sampling activities. Similar activities and equipment are being used in other facilities at SRS and, thus, the design and procedures of those facilities will be reviewed, and if necessary, the WSB design and procedures will be developed through activity HA, WSRC Procedure Manual 5Q (Ref. 40) requirements, mockups and radiation protection personnel experience. The procedure and equipment are appropriately controlled, implemented, trained to, and proceduralized through this RPP SAC, being similar to other personnel radiation protection equipment. Impairment of the equipment to provide the function of protecting the hand could be through inadequate equipment or training or personnel error. Safety equipment (needle shroud, tool for changing needles, etc.) inspections should be made prior to every use or at a defined frequency.

4.5.2 EVENT RESPONSE PROGRAM

One attribute from the ERP controls listed in the CHA (Ref. 8) has the Safety Significant function of limiting consequences to the FW from a waste handling fire that engulfs the waste storage pad. The function is accomplished by requiring workers in the area to respond in the event of a fire. This is a primary control for the event and, thus, is a candidate for a SAC. The secondary control, the WSB WACP for the waste building fire is also a SAC. The ERP attribute is also a secondary control for both the HAW area and cementation area fires.

The function of requiring specific responses would be controlled through a Directive Action SAC, with specific conditions identified when an appropriate response is required and how it would be performed under those conditions.

4.5.3 WASTE ACCEPTANCE CRITERIA PROGRAM

The WACP includes: 1) verification of the MFFF/PDCF (waste generators) WAC meeting the assumptions and requirements necessary for allowing transfer of waste to the WSB, and 2) verification of safety related requirements through meeting the WSB WAC.

The attributes from the WACP controls listed in the CHA (Ref. 8) has the Safety Significant function of preventing an explosion in a cemented drum (Worker Group [WG] 1) and in HAW process vessels (WG1, WG2, and WG3). This is the only control for the drum explosion event and it is a secondary control for the vessel explosion event and, thus, it is a candidate for a SAC. The WACP is a secondary control for an explosion resulting from rapid decomposition of TBP but is considered a necessary control (with the other SSCs) for prevention of the event. In addition, important assumptions provided in the CHA (Ref. 8) and supporting analysis that are considered for SACs include the specifications provided below for material composition, MAR bounding values, and criticality evaluation assumptions.

The WACP accomplishes its function by the following:

- Prevents explosion in a transuranic (TRU) waste drum by verifying vent paths in the HAW cementation drums, thus preventing buildup of hydrogen, and by prohibiting the presence of flammable liquids in the waste drums, thus preventing the buildup of volatile organic carbons.
- Protects radionuclide content assumptions used in the calculation of flammable gas generation rates and time to LFL by verifying the MFFF/PDCF WAC meets the requirements in the WACP prior to each transfer of waste to the WSB.
- Prevents a process vessel explosion due to TBP decomposition by verifying the TBP content of the waste transferred from the MFFF/PDCF meets the requirements in the WSB WACP prior to each transfer of waste to the WSB.

Accident analysis and criticality assumptions considered part of the WACP important to safety analysis and, thus, requiring SAC designation includes the following:

- Protect WSB criticality assumptions by verifying the following waste parameters are within requirements designated by the Inventory Control Program (ICP) prior to each transfer of HAW solution from the MFFF/PDCF to the WSB:
  - Volume transferred
  - Plutonium and U-235 concentrations
  - Am-241 concentration
  - Neptunium concentration
  - U-233 concentration
  - Uranium concentration
  - Ensure the mass (U-235 + 2(U-233))/U total is less than 0.0096
- Protect the MAR assumptions used in accident analyses and provided in the ICP for each transfer of HAW solution to the WSB:
  - MFFF/PDCF WAC and the ICP requires Am-241 (proportional secondary isotopes) concentration to be less than 2.0 grams of Am-241 per liter, and no more than 2 kg of Am-241 per transfer from MFFF.

The SACs of the following would be controlled through an LCO with specific surveillance provided:

- Properly venting and packaging WSB waste drums,
- Protecting the radionuclide content assumptions used in the WSB calculation of flammable gas generation rates and time to LFL,
- Protecting criticality assumptions of the amount of fissile material and enrichment of uranium allowed to be transferred to the WSB,
- Protecting the WSB radionuclide content assumptions used in the MAR assumptions for most accidents (Ref. 8).

Surveillances would address the verification of meeting the criteria and WSB procedural approval of the criteria prior to the transfer of a HAW receipt batch to the WSB. Specific concentration limits will be provided in the SAC.

Adequate 55-gallon drum venting is the only control indicated for an explosion event in a cemented drum outside the cementation area enclosure (assumes drum is closed). The drum vent prevents the explosion event and protects the immediate FW from physical injury. The explosion is not considered a standard industrial hazard due to the radiolytical nature of the flammable gas source. The vent design should be such that it provides an adequate vent path throughout the drum container precluding pockets of trapped gas within the drum. The vent function, as installed, including procedures and training will need to be verified periodically. The vent could be designated as a Safety Significant SSC, but it is more efficiently and appropriately controlled, implemented, trained to, and proceduralized through the WACP, being similar to other container venting functions. The vent function could be impaired by inadequate design or installation, modification, or damage. The WSB WAC will require the periodic inspection of drums and vents for degradation (including expansion, bubbled lid, etc.) that would indicate explosive gas may be present.

Protecting the radionuclide content assumptions used in the calculation of flammable gas generation rates and time to LFL through verification of the MFFF/PDCF WAC prior to transfer to the WSB is a secondary control for preventing explosions in the HAW vessels/evaporators. The WACP is listed as a secondary control (but a necessary preventer and, thus, is a candidate for a SAC) for TBP decomposition based explosions in the evaporators and will address chemical and radiological constituents. Although the organic content of the waste cannot be eliminated, it can be minimized to greatly reduce the possibility of the event. Although it is not listed as a credited control for the cementation area waste drum explosion event, the time to LFL is also calculated for the cementation event and, thus, assumptions of radionuclide content are pertinent. The PVVS is the primary SSC control for explosion events in the vessel and in the non-solid drums prior to sealing the lid.

The protected radionuclide content ensures that the calculations of flammable gas generation are bounding and conservative for the HAW vessels and cementation drums and, thus, is essential in assumptions leading to preventing the explosion. The WACP will protect the radionuclide assumptions used in the flammable gas time to LFL calculation (Ref. 19, 8) by limiting quantities of the radionuclides (Am-241 maximum of 6 kg, plus designated isotopes) and volume

for a specific transfer of HAW solution. Assumptions that are to be protected include the radionuclide content given in Tables 3 and 4 of Reference 19. Am-241 accounts for 99.9% of the hydrogen generated. Therefore, to protect the assumptions made in analyzing the hydrogen explosion events, significant increases cannot occur in the waste stream Np-237, U-235, U-238, Pu-238, Pu-239, Pu-240, Pu-241, and Pu-242 concentrations relative to the waste stream Am-241 concentrations. WSB personnel will verify MAR opposite these concentrations as indicated in the ICP. Other assumptions used in the flammable gas time to LFL calculation that should be considered for protection are the HAW tank dimensions (SDD, Ref. 9), minimum head space in each tank (limited to 1 foot by design, working volume from inputs and assumptions, and the SDD, [Ref. 9]), and nitrate molarities (in MFFF/PDCF WAC but not credited).

Criticality and accident analyses assume given bounding assumptions and MAR in determining credibility or consequences. Criticality incredibility is based in part on limiting the amount of fissile isotopes that will be transferred to the WSB and also on limiting the enrichment of uranium entering the WSB in the MFFF stripped uranium stream. These requirements are provided both in the WACP and ICP (Section 4.5.7). Although criticality events are not considered credible due to the nature of the waste, WACP invoked limits will ensure that initial assumptions are maintained. The concentrations of plutonium, U-235, U-233, Am-241, and neptunium should be provided along with the volume transferred.

Vulnerabilities include exceeding bounding radionuclide inventory or modification of tanks or working volume capacity. The inventories used in the HA/accident analysis are considered bounding maximums, but exceeding the assumed bounding values would affect flammable gas generation. Probably the most sensitive inventory assumption in the time to LFL calculation, given a protected maximum radiological inventory through the WACP and ICP, is the nitrate molarities. The difference in time to LFL between no nitrates and actual expected molarities is a factor of about 10 for the limiting time to LFL. However, limiting time to LFL assumes no nitrates and needs no WACP protection. The tank dimension and working volume are protected through design specification (Ref. 9) and the configuration control/USQ program.

4.5.4 HIGH ACTIVITY WASTE TRANSFER LINE PROTECTION PROGRAM

Attributes from the HAW TLPP controls listed in the CHA (Ref. 8) have the function of protecting FWs from inadvertent excavation into a buried transfer line. The function is accomplished by the following SACs:

- Providing an underground indicator over the line to identify it during any excavation activities in the vicinity of the line
- Providing appropriate markings to clearly identify the location of the line

This is a primary control for a spill scenario providing protection (event prevention) to the FWs and, thus, is a candidate for a SAC. Secondary controls include the site clearance permit and Traffic Control Program.

The function of providing an underground indication of the transfer line and aboveground markings where the line is located would be controlled through a Directive Action SAC, with

specific indication as to when the SACs are not required. The procedures should be developed and training provided.

Attributes of the TLPP will include a requirement that an underground indicator is placed over the transfer line to identify it during any excavation activities and has appropriate markings to clearly identify the location of the line. It should also include a combination of procedures and training to provide personnel with specific actions associated with transfer line operations. The TLPP should be consistent with and complement the Traffic Control Program and site clearance permit. The transfer line underground indicator and markings should be in place any time HAW solution is in the transfer line. Exceptions to the requirements need to include planned maintenance or modification to the line.

The program could be impaired by inadequate training or procedures, removal of markers, and inadequate implementation. Procedures and training should be reviewed periodically for adequacy and re-training provided at designated frequencies. The program function should be verified periodically.

4.5.5 TRANSFER CONTROL PROGRAM

The HAW transfer line Transfer Control Program control listed in the CHA (Ref. 8) has the Safety Significant function of providing protection (event prevention) to the FWs during or after a spill from the transfer line. The function is accomplished by requiring that specific controls be developed and in place for HAW transfer operations while the HAW transfer line is temporarily exposed for maintenance activities. This is a primary control for a spill scenario and, thus, is a candidate for a SAC. The secondary control includes the ERP.

The SAC should be controlled through an LCO with specific surveillances provided to ensure compliance. Surveillances should address verification of conditions and implementation, if required, prior to start-up/transfer of a HAW process batch to the WSB, or any time when the transfer line is in operation (expected to contain significant volume).

Attributes of the Transfer Control Program may include temporary vehicle or personnel barriers, specific worker training, and a restriction on transfers during bad weather, etc. and include a combination of procedures and training to provide personnel with specific actions and conditions. The Transfer Control Program should be consistent with and complement the TLPP. The program could be impaired by inadequate training or procedures, the removal of markers/barriers, and inadequate implementation. Procedures and training should be reviewed periodically for adequacy and re-training provided at designated frequencies. Markers should be verified at specific frequencies when implemented. The program function should be verified periodically.

4.5.6 FIRE PROTECTION PROGRAM

One attribute from the FPP controls listed in the CHA (Ref. 8) has the Safety Significant function of reducing the likelihood and intensity of potential fires to all workers and is a candidate for being a SAC due to the unmitigated high consequences to all workers, and by

being designated as the primary control for all HAW process room fires. The function is accomplished by minimizing combustibles in the HAW process room. Secondary controls include the HAW area fire suppression system and HAW area fire barriers.

In addition, important assumptions provided in the CHA (Ref. 8) that are considered for being SACs include no storage of flammable liquid or gas in the HAW process room. No storage of flammable liquid or gas is an assumption in declaring that a post seismic fire cannot be intense enough to have a significant release from the HAW process room vessels (Ref. 33).

The SACs for the following functions should be controlled through an LCO with specific surveillances provided:

- Minimizing transient combustibles
- Prohibiting storage of flammable liquid or gas in the HAW process room

Surveillances should address the verification of criteria periodically. Although the fire barrier integrity is periodically verified through its Design Function requirements in the TSR, day to day integrity, including doors/dampers/seals will be included in the FPP.

Attributes of the FPP include procedures and training to provide personnel with specific restrictions on the amount and location of combustibles and to verify compliance periodically. The program could be impaired by inadequate training, procedures, or implementation. Procedures and training must be reviewed periodically for adequacy and re-training provided at designated frequencies. Combustible material requirements must be verified at specific frequencies. The program function shall be verified periodically.

4.5.7 INVENTORY CONTROL PROGRAM

Attributes from the ICP controls listed in the CHA (Ref. 8) have the Safety Significant function of limiting consequences to all workers from small aircraft impact. The function is accomplished by controlling the radiological inventory in the HAW cementation area such that the consequences to the worker outside the WSB (co-located) will not challenge the evaluation criteria (100 roentgen equivalent, man [rem] at 100 meters). The ICP is a primary control for an external event small aircraft impact and, thus, is a candidate for a SAC. Secondary controls include the ERP, fire barriers around the HAW area, and the PVVS.

In addition, important assumptions provided in the CHA (Ref. 8) that are considered for being SACs include inventory monitoring to protect MAR assumptions for criticality, total HAW in the WSB, a single HAW process room vessel, HAW solution in the laboratory, HAW outside of the HAW process room, HAW bottoms, and one HAW liquid transfer from the MFFF. In addition, assumptions and limits for waste drum inventory and operation are included. The ICP SACs for MAR control for the cementation area small plane crash event and those protecting assumptions in the CHA (Ref. 8) are as follows:

CHA/Accident Analysis MAR	The entire HAW inventory	18.3 kilograms of Am-241
	One HAW transfer from MFFF	2 kilograms of Am-241
	HAW solution shall not exceed 2 grams per liter of Am-241	2 grams per liter of Am-241
	Glovebox/hood, (one liter HAW)	2 grams of Am-241
	HAW inventory outside process room (or in cementation area)	420 grams of Am-241
	Single HAW vessel	6 kilograms of Am-241
	Drum of HAW cemented	45 grams of Am-241
Waste Drum Limits	Transuranic drum	80 plutonium equivalent curies
	One transuranic drum allowed in a room; two in the waste packaging room	
	Waste drums cannot be stacked more than two high	
	Drums allowed in waste storage building equals: 48, 55-gallon transuranic job waste; 132, 55-gallon drums of solidified waste; two transuranic assumed at 80 plutonium equivalent curies; and cemented drums assumed 45 grams of Am-241 each	
Criticality	The amount of plutonium plus U-235 received in the WSB must be less than 450 grams per year, unless the mass (U-235 + 2(U-233))/U total is less than 0.0096, then it does not need to be included in this limit	
	The amount of Am-241 received in the WSB must be less than 40 kilograms per year	

The amount of neptunium received in the WSB must be less than 10 kilograms per year

The SACs for controlling the inventory should be controlled through an LCO with specific surveillances provided. Surveillances should address verification of proximity to limits prior to the start-up of a HAW process transfer and should be monitored through a formally controlled data base.

It has been shown that it is incredible for a small aircraft to impact the area of the WSB containing the highest activity material (the HAW area), based upon the footprint area (Ref. 17). The fire barrier surrounding the HAW area will prevent fire from a crash into other areas of the building from involving material in the HAW process room. The inventory outside of the HAW process room should be limited to levels that will not challenge guidelines for the worker outside the building. Table 3.2-2 of Reference 8 shows that if the inventory of the HAW cementation area is limited to 420 grams of Am-241 (plus the other radionuclides in the assumed waste isotopic distribution), then the potential consequences are limited to approximately 50 rem to the worker outside the building (at 100 meters).

The MAR inventories provided are the maximum bounding inventories for all of the events (those not listed are bounded by the given MAR) evaluated in the CHA and those for which formal accident analysis was completed. All inventories given for Am-241 include secondary isotopes Np-237, U-235, U-238, Pu-238, Pu-239, Pu-240, Pu-241, and Pu-242. The secondary isotopes contribute a small fraction of the total dose.

Waste configurations are assumptions of limiting inventory, and stacking limit of no more than two high affects the consequences due to a spill/seismic event.

The program could be impaired by inadequate training, procedures, or changes in radiological constituents. Procedures and training should be reviewed periodically for adequacy and re-training provided at designated frequencies. Program function should be verified periodically. Changes in radiological constituents would require a change to the WACP, evaluation through the USQ process, and possibly new HA and accident evaluation or analysis, and safety controls.

4.5.8 PROTECTION OF HIGH ACTIVITY WASTE EVAPORATOR STEAM COILS' INTEGRITY

The control for protecting the integrity of the HAW evaporator steam coils listed in the CHA (Ref. 8) has the Safety Significant function to prevent consequences to the FWs from a process leak into the steam system. The function is accomplished by preventing the HAW liquid from entering the steam loop. The protection of evaporator coil integrity is the only control for this event and, thus, is a candidate for a SAC.

The SAC should be controlled through an LCO with specific surveillances provided for chemical corrosives and structural integrity. Liquid chemical corrosives (e.g., pH) shall be monitored, and corrosive environment conditions shall be minimized. The SAC should provide verification that the HAW liquid is not leaking into the steam system through the HAW evaporator steam coils by

periodic direct pressure testing and periodic radiation monitoring of the steam coils. Surveillances should address verification and maintenance of criteria and coil pressure integrity prior to the start-up of the evaporator or transfer of a HAW process batch to the WSB.

The coil integrity function could be impaired by inadequate design or installation, modification, damage, or internal failure (e.g., corrosion). The coils are a robust design, seismically qualified and corrosion resistant (Ref. 9), and are expected to resist failure. The coils are designed not to clog and retain solids (adequate spacing between loops). The steam system is a closed loop system (design currently being changed); thus, limiting exposure to the immediate area of the steam process. Changes in design or proposed activities that could damage the evaporator coils would require evaluation through the USQ process and possibly new hazards and accident evaluation or analysis. The protection of the HAW evaporator coils integrity could be impaired by inadequate training or procedures, or a failure to perform the chemical environment, structural integrity, or pressure checks. Procedures and training must be reviewed periodically for adequacy and re-training provided at designated frequencies.

4.5.9 SITE WORK CONTROL PROGRAM

The attribute from the SWCP controls listed in the CHA (Ref. 8) has the Safety Significant function of preventing external events from affecting all workers. The function is accomplished by preventing external impacts to the WSB that could result in a hazardous material release. This is the primary control for controlling the area surrounding the WSB to prevent events initiated by construction or maintenance activities around the facility, and, thus, is a candidate for a SAC. The Hoisting and Rigging Program is a secondary control.

The function of protecting the WSB from external events should be controlled through a Directive Action SAC, with specific conditions when evaluation is required. Procedures should be developed and training provided.

The SWCP evaluates all external work activities to ensure that the activities do not affect the safety attributes of the WSB. The SWCP along with the USQ process ensures that any proposed activities are evaluated for impact on the building. All significant external activities including those involving cranes (impact building or stack, critical lifts over any part of the building or exhaust path), heavy equipment movement or use, excavation, digging, etc. shall be evaluated prior to the activity. Attributes of the SWCP include procedures and training to provide personnel with the types of activities needing evaluation and specific methods for evaluation. The program could be impaired by inadequate training, procedures, or implementation. Procedures and training must be reviewed periodically for adequacy and re-training provided at designated frequencies. Program function shall be verified periodically.

4.5.10 TRAFFIC CONTROL PROGRAM

The attribute from the Traffic Control Program controls listed in the CHA (Ref. 8) has the Safety Significant function of preventing external vehicle traffic from affecting all workers. The function is accomplished by preventing external vehicle impacts to the WSB and HAW process room that could result in a release. This is the only control for preventing vehicles in the area

from impacting the exterior HAW process room walls (process room walls that are part of the WSB exterior) and causing a HAW release due to a spill, fire, or explosion and, thus, is a candidate for a SAC. The event is initiated by a vehicle (e.g., diesel fuel tanker refilling the diesel generator tank) inadvertently impacting the WSB/HAW process room exterior wall, spilling fuel in the process room and releasing HAW and LAW inventory. The event is bounded by the HAW process room fire event. The Traffic Control Program is a secondary control for breaching of the transfer line due to heavy vehicle traffic.

The function of protecting the exterior HAW process room walls from an external vehicle impact event should be controlled through a Directive Action SAC. The SAC should specify and provide surveillances for posting speed limits, vehicle travel restrictions, and physical barrier requirements. The Traffic Control Program is different from the SWCP in that it protects from accidents due to routine vehicle traffic in those areas and conditions that could impact the process room walls and HAW inventory, by postings and barriers. The SWCP protects from specific external planned events by evaluating those events against the Safety Basis.

The Traffic Control Program protects against (prevents) potential vehicle impact to the HAW process room exterior walls. The exterior HAW process room walls are vulnerable to an inadvertent impact from heavy vehicles in the area. Routine vehicle traffic could result in a "runaway" vehicle that may have enough mass and energy to breach the exterior HAW process room wall. Providing traffic restrictions, speed limits, and physical barriers in vulnerable locations will prevent the event. The robust nature of the WSB/HAW process room walls (PC-3+) and limited area inside the WSB site perimeter fence preclude significant vehicle impact.

Attributes of the Traffic Control Program include postings, barriers, procedures and training to provide personnel with the requirements of the program. The program could be impaired by inadequate postings, barriers, training, procedures, or implementation. Postings, barriers, training, and procedures must be reviewed periodically for adequacy and re-training provided at designated frequencies. Program function shall be verified periodically.

4.6 REFERENCES

1. Specific Administrative Controls. DOE-STD-1186-2004, U.S. Department of Energy, Washington, DC, August 2004.

2. Preparation Guide for U.S. Department of Energy Nonreactor Nuclear Facility Documented Safety Analyses. DOE-STD-3009-94, Change Notice No. 3, U.S. Department of Energy, Washington, DC, March 2006.

3. "Nuclear Safety Management," Energy. Title 10, Code of Federal Regulations, Part 830, U.S. Nuclear Regulatory Commission, Washington, DC.

4. Natural Phenomena Hazards Performance Categorization Guidelines for Structures, Systems, and Components. DOE-STD-1021-93, Change Notice No. 1, U. S. Department of Energy, Washington, DC, Reaffirmed with Errata April 2002.

5. Functional Classification," Procedure 2.25, Rev. 15, Conduct of Engineering and Technical Support. WSRC Procedure Manual E7, Washington Savannah River Company, Aiken, SC, June 2007.

6. Technical Safety Requirements Methodology Manual. WSRC Document Number WSRC-TR-2003-573, Rev. 2, Washington Savannah River Company, Aiken, SC, September 2007.

7. Plutonium Disposition Facility Design Description Waste Solidification Building (U). G-FDD-F-00007, Rev. 3, Washington Savannah River Company, Aiken, SC, October 2007.

8. Consolidated Hazards Analysis for the Waste Solidification Building (WSB). WSRC-TR-2007-00134, Rev. D, Washington Savannah River Company, Aiken, SC, December 2007.

9. Waste Solidification Building System Design Description for High Activity (H/A) Waste System. X-SYD-F-00012, Rev. 4, Washington Savannah River Company, Aiken, SC, November 2007.

10. Waste Solidification Building System Design Description for: Building Structures System. G-SYD-F-00022, Rev. 3, Washington Savannah River Company, Aiken, SC, November 2007.

11. "SRS Structural Design Criteria," Engineering Standard 01060, Rev. 8, Engineering Manual. WSRC-TM-95-1, Washington Savannah River Company, Aiken, SC, October 6, 2006.

12. Project Fire Hazards Analysis for Waste Solidification Building. F-FHA-F-00033, Rev. C, Washington Savannah River Company, Aiken, SC, November 2007.

13. "Nuclear Facility Unreviewed Safety Questions," Procedure 1.05, Rev. 6, WSRC Facility Safety Document Manual. WSRC Procedure Manual 11Q, Washington Savannah River Company, Aiken, SC, April 2006.

14. Facility Safety. DOE Order 420.1B, U.S. Department of Energy, Washington, DC, December 2005.

15. Maintenance Management Program for DOE Nuclear Facilities. DOE Order 433.1A, U.S. Department of Energy, Washington, DC, February 2007.

16. Mcinnis, S. H. High Activity Cell Liner Sizing in the Waste Solidification Building, M-CLC-F-00858, Rev. C, Washington Savannah River Co, Aiken, SC, January 2008.

17. Keenan, G.L. WSB Aircraft Impact Frequencies (U). S-CLC-F-00616, Rev. 0, Washington Savannah River Company, Aiken, SC, September, 2007.

18. Natural Phenomena Hazards Design and Evaluation Criteria for Department of Energy Facilities. DOE-STD-1020-2002, U.S. Department of Energy, Washington, DC, January 2002.

19. Klotz, W.L. Waste Solidification Building Tanks Hydrogen Times to LFL. S-CLC-F-00608, Rev. A, Washington Savannah River Company, Aiken, SC, May 2007.

20. Kesterson, M. Predicted WSB Pipe Failure Modes Resulting from Hydrogen Explosions. U-CLC-F-00027, Washington Savannah River Company, Aiken, SC, September 2007.

21. Rothermel, R. Waste Solidification Building Required Charge Vessel and Tank Thickness to Withstand Detonation Accident (U). T-CLC-F-00417, Rev. A, Washington Savannah River Company, Aiken, SC, October 2007.

22. Saccone, D. Waste Solidification Building System Design Description for: Heating, Ventilation, and Air Conditioning System (HVAC). M-SYD-F-00055, Rev. 4, Washington Savannah River Company, Aiken, SC, November 2007.

23. "Confinement Ventilation System Requirements," Engineering Standard 15889, Rev. 3, Engineering Manual. WSRC-TM-95-1, Washington Savannah River Company, Aiken, SC, April 28, 2005.

24. Lux, C.R. SIL Determination for WSB PVV System. S-CLC-F-00613, Rev. 0, Washington Safety Management Solutions, Aiken, SC, September 2007.

25. Waste Solidification Building DNFSB 2004-2 Active Confinement Evaluation (Table 4.3). Interoffice Memorandum, NNP-WSB-2007-00027, Rev. 2, Washington Savannah River Company, Aiken, SC, November 1, 2007.

26. HEPA Filter Program Manual. WSRC Procedure Manual 2Y, Washington Savannah River Company, Aiken, SC.

27. Waste Solidification Building System Design Description for: Analytical Laboratory System. X-SYD-F-00014, Rev. 2, Washington Savannah River Company, Aiken, SC, June 2007.

28. Standard for Fire Protection for Facilities Handling Radioactive Materials. NFPA 801, National Fire Protection Association, 2003.

29. Life Safety Code. NFPA 101, National Fire Protection Association, 2006.

30. Waste Solidification Building System Design Description for Balance of Plant Support System. G-SYD-F-00023, Rev. 3, Washington Savannah River Company, Aiken, SC, November 2007.

31. "Fire Protection Recommended Practices and Guidance Criteria," Engineering Guide 01120-G, Engineering Manual. WSRC-TM-95-1, Westinghouse Savannah River Company, Aiken, SC, March 2003.

32. Fire Protection Program. WSRC Procedure Manual 2Q, Washington Savannah River Company, Aiken, SC.

33. Haddock, R.R. Safety Design Strategy for the Waste Solidification Building. WSRC-TR-2007-00392, Washington Savannah River Company, Aiken, SC, October 2007.

34. Waste Solidification Building Fire Water Supply Path Forward, NNP-WSB-2007-00033, Rev. 0, December 2007.

35. Waste Solidification Building System Design Description for Low Activity Waste System. X-SYD-F-00013, Rev. 4, Washington Savannah River Company, Aiken, SC, October 2007.

36. Castellaw, C. Piping and Instrumentation Drawing. M-M6-F-4123, Westinghouse Savannah River Company, Aiken, SC, February 2003.

37. Design Guidance for Instrumented Systems That Are Used in Safety Significant and Hazardous Processes. SRS Engineering Guide 01703-G, Rev. 3, Westinghouse Savannah River Company, Aiken, SC.

38. Keenan, G.L. WSB SIL Determination for Temperature and Pressure Interlocks for Prevention of Runaway Red Oil Reactions. S-CLC-F-00607, Rev. A, Washington Savannah River Company, Aiken, SC, May 2007.

39. "Application of ISA 84.00.01-Part 1 for SRS Non-Reactor Facilities," Engineering Standard 01703, Engineering Manual. WSRC-TM-95-1, Washington Savannah River Company, Aiken, SC.

40. Radiological Control Manual. WSRC Procedure Manual 5Q, Washington Savannah River Company, Aiken, SC.

41. Hood and Glovebox Guide. SRS Engineering Guide 13090-G, Rev. 2, Westinghouse Savannah River Company, Aiken, SC.

4.7 TABLES

Table 4.4-1 Safety Significant Structures, Systems, and Components

Chapter 4 Section	Safety Significant SSCs	Chapter 3 Accident Reference	Safety Function	Functional Requirements	Performance Criteria	TSR (Assumptions requiring TSR protection are provided in Table 3.3-1)
4.4.1	WSB, HAW area, and cementation area	Leaks/spills, all fires, NPH events	The WSB, HAW area, and cementation area have the following Safety Significant functions:	The functional requirements of the WSB Building and HAW process room are as follows (required when HAW is in the process room):	Passive DFs Protected by the Configuration Control Program (including USQ program). Contains spills in the HAW process room, prevents fires from propagating into or out of the HAW area,, cementation area, PVVS rooms, and limits the affect of NPH events.	Passive DFs
		Leaks/spills	• The HAW area process room walls and stainless steel liner limits consequences to the FW (Worker Group [WG] 1 and WG2) due to a spill. The function is accomplished by containing spills to the immediate area.	• Maintain the integrity of the HAW process room walls and liner. For spills originating inside the HAW process room, the room construction (walls with a stainless steel liner) provides a confinement function by limiting the release of MAR from inside the room.		
		Fire	• The fire barrier around the HAW area limits the consequences to all workers (WG1, WG2, and WG3) from fires. The function is accomplished by preventing fires from propagating into or out of the HAW area. • The fire barrier around the cementation area limits the consequences to FWs (WG1, WG2) from fires. The function is accomplished by preventing fires from propagating into or out of the cementation area. • The fire barrier around and between the two PVVS trains limits the consequences to all workers (WG1, WG2, and WG3) from a fire. The function is accomplished by preventing fire propagation into or between the duplicate PVVS rooms	• Maintain the integrity of the HAW area and cementation area fire barriers. During fire events, the HAW area and Cementation area function as 3 hour fire barriers protecting the MAR inside the HAW process room and the cementation area.		

Table 4.4-1 Safety Significant Structures, Systems, and Components (Continued)

Chapter 4 Section	Safety Significant SSCs	Chapter 3 Accident Reference	Safety Function	Functional Requirements	Performance Criteria	TSR (Assumptions requiring TSR protection are provided in Table 3.3-1)
4.4.1 continued		NPH	• The seismically and wind/tornado NPH qualified WSB structure (walls, roof, floors) limits the consequences to all workers (WG1, WG2, and WG3) during high winds and seismic events. The function is accomplished by maintaining its structural integrity to protect Safety SSCs. • The seismically qualified fire barrier around the HAW area limits the consequences to all workers (WG1, WG2, and WG3) from a seismic fire. The function is accomplished by preventing fire propagation into the HAW area following a seismic events. • The seismically qualified fire barrier around and between the two PVVS trains the limits the consequences to all workers (WG1, WG2, and WG3) from a seismic fire. The function is accomplished by preventing fire propagation into or between the duplicate PVVS rooms and SSCs. • The seismically qualified fire barrier around the cementation area limits the consequences to the FWs (WG1, and WG2). The function is accomplished by preventing fire propagation into the HAW cementation room following a seismic event.	• Maintain the integrity of the WSB structure during PC-3+ seismic and PC-3 high wind/tornado events, the WSB structure (and HAW area structure) protects process vessels from damage due to structural/building collapse and from external/missile impact. • Maintain the seismically qualified 3-hour fire barrier around the HAW area, and the cementation area, thereby, preventing fire propagation into the HAW process room or the HAW cementation room, following a seismic event and affecting HAW inventory. • Maintain the seismically qualified 3-hour fire barrier around and between the two PVVS rooms, thereby, preventing fire propagation into or between the PVVS rooms following a seismic event to allow the PVVS to perform its safety function.		

Table 4.4-1 Safety Significant Structures, Systems, and Components (Continued)

Chapter 4 Section	Safety Significant SSCs	Chapter 3 Accident Reference	Safety Function	Functional Requirements	Performance Criteria	TSR (Assumptions requiring TSR protection are provided in Table 3.3-1)
4.4.2	HAW process piping, valves, vessels, HAW sample lines, and HAW cementation transfer line	Spills, explosion, seismic	The HAW process piping, valves, vessels, etc. have the following Safety Significant functions:	The functional requirements of the HAW process room piping, valves and vessels are as follows (required when HAW is present in a vessel or line):	Passive DFs Protected by the Configuration Control Program (including the USQ program).	DF
		Spills	• HAW vessel overflow lines limit the consequences to the FWs (WG1 and WG2) from an overflow to the HAW process room spill. The function is accomplished by overflow lines being connected to the overflow tank. • The jacketed sample lines limit consequences to the FWs (WG1 and WG2) from a leak/spill. The function is accomplished by jacketed line directing HAW leaks back to the lined portion of the HAW process room. • The pipe chase for the HAW process room to the cementation (enclosure) line limits consequences to FWs (WG1 and WG2) from a spill. The function is accomplished by the pipe chase protecting the transfer line from impact. • The HAW cementation transfer line jacket limits consequences to FWs (WG1 and WG2) from a spill. The function is accomplished by containing leaks from damaged core pipes.	• Maintain the configuration and capability of the process vessel overflow line to the overflow tank. • Maintain configuration and integrity of pipe jackets on jacketed (transfer and sample) lines. • Cementation transfer line is to be installed in a pipe chase and prevent spills.	Prevents spills in the process room, in lines, and valves, and limits the affect of explosions in process vessels, lines, valves, and from NPH spills/leaks in HAW systems.	

Table 4.4-1 Safety Significant Structures, Systems, and Components (Continued)

Chapter 4 Section	Safety Significant SSCs	Chapter 3 Accident Reference	Safety Function	Functional Requirements	Performance Criteria	TSR (Assumptions requiring TSR protection are provided in Table 3.3-1)
4.4.2 continued		Explosion	• HAW process piping and valves (including sample lines and HAW cementation transfer line) limits consequences to the immediate FW (WG1) from an explosion. The function is accomplished by process piping and valves not fragmenting to cause physical injury due to a detonation. • Fluidic transfer pump charge vessels limit consequences to the FWs (WG1 and WG2) from an explosion. The function is accomplished by the SSC not failing in a fashion that will cause a failure of HAW process vessels. If the pump fragments during a detonation, it will fragment in such a way as not to cause a failure of HAW process vessel. This attribute works together with the PVVS (Section 4.4.3) to provide confinement during and after detonation in a fluidic transfer pump charge vessel. • HAW process vessels limit the consequences to all workers (WG1, WG2, and WG3) during an explosion. The function is accomplished by the SSC surviving the pressure spike generated by a detonation in the charge vessel. The design of HAW process vessels precludes significant solution displacement following detonation. • The jacketed HAW Cementation transfer line limits consequences to the FWs (WG1 and WG2) from a detonation in the core pipe. The function is accomplished by the jacketed line containing leaks and directing leaks to a collection point. • The jacketed HAW cementation transfer line core pipe limits consequences to the FWs (WG1 and WG2) from an explosion. The function is accomplished by the transfer line not failing in a manner that compromises the confinement function of the transfer line jacket due to a detonation. • The jacketed HAW sample lines limit the consequences to the FWs (WG1 and WG2) from an explosion. The function is accomplished by the sample line not failing in a manner that compromises the confinement function of the sample line jacket due to a detonation. • HAW vessel overflow lines limit consequences to all workers (WG1, WG2, and WG3) from an explosion in a process vessel. The function is accomplished by protecting head space volume assumptions in time to LFL calculations (Ref. 19).	• Maintain the integrity of the HAW piping, valves, vessels, including the fluidic transfer pump charge vessel, etc. The HAW process piping, valves, and vessels must withstand the pressure of a detonation without fragmenting. Jacketed lines must retain leak confinement capability after detonations in the line. Maintain the integrity, thereby, preventing the release of HAW solution from the lines, vessels, valves, and eliminates the potential for flying debris.		

Table 4.4-1 Safety Significant Structures, Systems, and Components (Continued)

Chapter 4 Section	Safety Significant SSCs	Chapter 3 Accident Reference	Safety Function	Functional Requirements	Performance Criteria	TSR (Assumptions requiring TSR protection are provided in Table 3.3-1)
4.4.2 continued		Explosion (continued)	• HAW evaporator design limits consequences to all workers (WG1, WG2, and WG3) from an explosion in a process vessel. The function is accomplished by protecting head space volume assumptions in time to LFL calculations (Ref. 19).			
4.4.2 continued		Seismic	• HAW process vessels, piping, and valves limit the consequences to all workers (WG1, WG2, and WG3) from a seismic spill. The function is accomplished by the process vessels, piping, and valves being seismically qualified, thus, preventing spills of HAW material during a seismic event. • The steam coils and cooling coils inside vessels and cell vessel penetrations that are part of the vessel pressure boundary limit the consequences to all workers (WG1, WG2, and WG3) from a seismic spill. The function is accomplished by the steam and cooling coils being seismically qualified, thus, preventing the release of HAW material outside vessels during a seismic event. • The HAW sample lines and jackets are seismically qualified, thus, limiting consequences to the FWs (WG1 and WG2) from a seismic spill. The function is accomplished by preventing the spill of HAW material during or after a seismic event. • The cementation transfer line core pipe and jacket limit consequences to FWs (WG1 and WG2) from a seismic spill. The function is accomplished by preventing the breaching of a core line and jacket due to a seismic event.	• Maintain the integrity of the HAW process piping, valves, vessels, etc., as well as the steam coils and cooling coils inside the vessels must be maintained during and following a seismic event.		
4.4.3	Transfer Line	Leaks/spills, explosion, seismic	The HAW transfer (receipt) line has the following Safety Significant functions:		Passive DFs protected by the Configuration Control Program (including the USQ program).	DF
		Leaks/spills	• The jacketed HAW transfer (receipt) line limits consequences to the FWs (WG1 and WG2) from a spill. The function is accomplished by the jacketed line containing leaks when the core pipe is damaged.	• Maintain the integrity of the transfer line which is constructed of stainless steel, is qualified to PC-3+(seismic) criteria and jacketed in order to collect any HAW material leaking from the core pipe.	Contains spills in process line, limits the effect of explosions (or from leaks) in the transfer line, and the core pipe prevents seismic leak-ins.	

Table 4.4-1 Safety Significant Structures, Systems, and Components (Continued)

Chapter 4 Section	Safety Significant SSCs	Chapter 3 Accident Reference	Safety Function	Functional Requirements	Performance Criteria	TSR (Assumptions requiring TSR protection are provided in Table 3.3-1)
4.4.3 continued		Explosion Seismic	• The jacketed HAW transfer (receipt) line limits consequences to the FWs (WG1 and WG2) from a detonation in the core pipe. The function is accomplished by the jacketed line containing leaks and directing them to a collection point. • Transfer line limits the consequences to FWs (WG1 and WG2) from an explosion. The function is accomplished by the line not failing in a manner that compromises the confinement function of the jacketed line from a detonation. • The transfer line core pipe and jacket limits consequences to FWs (WG1 and WG2) from a seismic spill. The function is accomplished by the transfer line core pipe and jacket being seismically qualified, thus, preventing a spill due to a seismic event.	• Maintain the integrity of the HAW transfer piping and valves. The HAW jacketed transfer line must withstand the pressure of a detonation without losing the confinement function of the jacket and must direct leaks to a collection point.		

Table 4.4-1 Safety Significant Structures, Systems, and Components (Continued)

Chapter 4 Section	Safety Significant SSCs	Chapter 3 Accident Reference	Safety Function	Functional Requirements	Performance Criteria	TSR (Assumptions requiring TSR protection are provided in Table 3.3-1)
4.4.4	HAW (PVVS)	Fire, explosions, seismic	The PVVS has the following Safety Significant functions:	The functional requirements of the HAW PVVS are as follows (required when HAW is in the process room or cementation enclosure):	Limits the effect from fires (including seismic) in the process room, prevents explosions (including seismic) in the primary process vessels and cementation drums, and limits the affect of an explosion in a fluidic pump charge vessel, and also limits the affect from external events that impact the PVVS exhaust duct or flow capability. Maintain structural integrity and operability such that the air flow provides that hazardous material is HEPA filtered and exhausted to the stack.	LCO to define modes, and requirements for operability, surveillances, responses, testing, and maintenance.
		Explosion	• The primary function of the PVVS is to prevent an explosion in HAW process room vessels/evaporator (WG1, WG2, and WG3) and in a HAW cementation area drum (WG1 – when connected to filling station). The function is accomplished by maintaining flammable gas concentration below 25% of the LFL by providing sufficient dilution flow. • Limits the consequences to facility workers (WG1 and WG2) from an explosion in a fluidic transfer pump charge vessel. The function is accomplished by the PVVS providing filtration of airborne hazardous material from the HAW vessels.	• Maintain flammable gas concentration in the vapor space of the HAW process room vessels and cementation area enclosure below 25% of the LFL by providing adequate dilution flow. • Provide adequate exhaust system operation, flow, and HEPA filtration to control the release of hazardous material.	Installation, operation, surveillance, maintenance, and testing for the PVVS should be per code of record as designated in the SDD (Ref. 22) and FHA (Ref. 12).	LCO for HEPA efficiency.

Table 4.4-1 Safety Significant Structures, Systems, and Components (Continued)

Chapter 4 Section	Safety Significant SSCs	Chapter 3 Accident Reference	Safety Function	Functional Requirements	Performance Criteria	TSR (Assumptions requiring TSR protection are provided in Table 3.3-1)
4.4.4 continued		Seismic	• Prevents an explosion in primary vessels during and after a seismic event (WG1, WG2, and WG3). The function is accomplished by the PVVS being seismically qualified and, thus, providing continual dilution flow to the HAW vessels. This maintains the flammable gas concentration below 25% of the LFL and prevents a release of airborne hazardous material during and after a seismic event. • Limits the consequences to all workers (WG1, WG2, and WG3) from a seismic initiated fire. The function is accomplished by providing dual trains separated by seismically qualified fire barriers between trains, to allow PVVS to continue operating to provide dilution flow and filter hazardous material in a seismic event.	• Maintain the PVVS seismic integrity to PC-3+ seismic criteria to prevent explosion - same as for the explosion, above.		
4.4.5	HAW ventilation system (process room, cementation enclosure, sample glovebox, and laboratory glovebox)	Leaks/spill, explosion	The HAW ventilation system has the following Safety Significant functions:	The functional requirements of the HAW ventilation system are as follows (required when HAW is in the process room, in the cementation enclosure, sample glovebox, or laboratory glovebox):	Limits the effect from spills and explosions in the process room HAW lines by providing HEPA filtration. Maintain the structural integrity and operability such that air flow provides that hazardous material is HEPA filtered and exhausted to the stack.	LCO to define modes, and requirements for operability, surveillances, responses, testing, and maintenance.
		Leaks/spill	• Limits consequences to the FW outside the HAW process room (WG2). The function is accomplished by providing filtration of airborne hazardous material in the event of a spill in the process room. • Limits consequences to FWs from spills inside the cementation enclosure or sample glovebox (WG1 and WG2), and to the immediate FW (WG1) from spills inside the laboratory glovebox. The function is accomplished by providing filtration of airborne hazardous material.	• Provide adequate exhaust system operation, flow, and HEPA filtration to control the release of hazardous material from a spill or explosion.	Installation, operation, surveillance, maintenance, and testing should be per code of record as designated in the SDD (Ref. 22).	LCO for HEPA efficiency.

Table 4.4-1 Safety Significant Structures, Systems, and Components (Continued)

Chapter 4 Section	Safety Significant SSCs	Chapter 3 Accident Reference	Safety Function	Functional Requirements	Performance Criteria	TSR (Assumptions requiring TSR protection are provided in Table 3.3-1)
4.4.5 continued		Explosion Seismic	• Limits consequences to the FW outside the process room (WG2). The function is accomplished by providing filtration for any hazardous material that is released in the HAW process room from an explosion. • Limits consequences to the FW outside the process room (WG2). The function is accomplished by providing passive confinement for any hazardous material that is released in the HAW process room during and after a seismic event.	• Maintain the ventilation design installation and integrity, including ductwork up to and including HEPA filtration, and ductwork to the exhaust stack. • Maintain the passive confinement boundary for the HAW process room through PC-3+ seismic design for the process room ventilation up through the first HEPA filter		
4.4.6	HAW area and cementation area fire suppression systems	Fire	The HAW area and cementation area fire suppression systems have the following Safety Significant function: • Limits the consequences to all workers (WG1, WG2, and WG3) in a HAW area fire, and to FWs (WG1 and WG2) for a cementation area fire. The function is accomplished by mitigating fires such that a significant release does not occur.	The functional requirements of the HAW area and Cementation Area fire suppression systems are as follows (required when HAW is in the process room or cementation area): • Maintain the operability of the HAW area and the HAW cementation area fire suppression system to prevent small fires from becoming large fires with sufficient reliability to preclude significant release of radiological material. Sufficient reliability is ensured through meeting NFPA design, operation, testing and maintenance requirements, and by having a formal Safety Significant (through the Fire Protection Program)interface control (ensures fire water supply meets NFPA requirements) with the organization providing the water supply.	Limits the intensity and size of fires by providing a wet fire suppression system. The system is required to comply with the code of record and applicable NFPA code requirements, including design, installation, inspection, testing, and maintenance, with the exception of identified deficiencies that are processed according to the site-wide fire protection compliance assessment program.	LCO to define modes, and requirements for operability, surveillances, responses, testing, and maintenance.

Table 4.4-1 Safety Significant Structures, Systems, and Components (Continued)

Chapter 4 Section	Safety Significant SSCs	Chapter 3 Accident Reference	Safety Function	Functional Requirements	Performance Criteria	TSR (Assumptions requiring TSR protection are provided in Table 3.3-1)
4.4.7	HAW and LAW evaporator high steam pressure and high temperature interlocks	Explosion	The HAW evaporator and LAW evaporator high steam pressure and high temperature interlocks have the following Safety Significant function: • Protects all workers (WG1, WG2, and WG3), for a HAW evaporator event, and the immediate FW (WG1) for a LAW evaporator event from an explosion. The function is accomplished by the following: – The evaporator high steam pressure interlocks prevent the evaporator steam coil pressure from exceeding 25 psig, which prevents the temperature from exceeding that required for rapid decomposition of TBP into a flammable gas. – The evaporator high temperature interlocks prevent the evaporator temperature from exceeding 130º C, the temperature required for rapid decomposition of TBP into a flammable gas.	The functional requirements of the HAW and LAW evaporator high steam pressure and temperature are as follows (Required when HAW or LAW material is in the evaporator with steam applied to the coils): • Maintain the integrity and operability of the interlock system to keep steam pressure and temperature below the required limits to prevent for rapid decomposition of TBP into a flammable gas. • Must be in service and within calibration and testing frequency when the evaporator is in operation or warm standby.	Prevents a explosions resulting from rapid degradation of TBP by controlling steam pressure and temperature to the evaporator. Installation, operation, surveillance, calibration, maintenance, and testing should be per code of record as designated in the SDDs (Ref. 9, 35).	LCO to define modes, and requirements for operability, surveillances, responses, testing, and maintenance.
4.4.8	HAW cementation enclosure, HAW sample glovebox, and laboratory gloveboxes	Leaks/spills	The HAW cementation enclosure, HAW s ample glovebox, and laboratory glovebox have the following Safety Significant function: • The laboratory glovebox limits consequences to the immediate FW (WG1) from spills/splashes. The function is accomplished by preventing hazardous liquid from contacting the immediate FW.	The functional requirements of the cementation area enclosure, laboratory and sample glovebox enclosures is as follows (required when HAW is in the enclosure or glovebox): • Maintain the integrity of the glovebox/enclosure as a barrier to prevent hazardous liquid from splashing on FWs..	Passive DFs protected by the Configuration Control Program (including the USQ program) and the RPP. Contains spills inside the glovebox or enclosure and prevents fluid contact with the immediate worker. Confinement integrity is verified by the ability to regulate enclosure and glovebox pressure through respective ventilation systems (see Section 4.4.5).	Passive DF

Table 4.4-1 Safety Significant Structures, Systems, and Components (Continued)

Chapter 4 Section	Safety Significant SSCs	Chapter 3 Accident Reference	Safety Function	Functional Requirements	Performance Criteria	TSR (Assumptions requiring TSR protection are provided in Table 3.3-1)
4.4.8 continued			• The cementation area enclosure and sample glovebox limits the consequences to the FWs (WG1 and WG2, enclosure and glovebox protect WG1 from direct spill, and their respective ventilation systems, Section 4.4.5, protect WG2 from airborne hazardous material released) from a spill inside the enclosure or glovebox. The function is accomplished by containing spills inside the cementation enclosure to the immediate area, and by preventing hazardous liquid from contacting the FW from a sample glovebox spill.	• Maintain the integrity of the HAW cementation enclosure to contain spills.	Ventilation in the enclosure and gloveboxes is a Safety Significant function in conjunction with the confinement structure.	
4.4.9	Diesel Generator	Leaks/Spills, Explosions, External Events, NPH Events	The diesel generator has the following Safety Significant functions: The diesel generator limits the consequences to all workers (WG1, WG2, and WG3) from releases that occur during loss of power. The function is accomplished by providing electric power to active Safety Significant controls when sufficient power is not available from the primary electric power supply. • The diesel generator is capable of responding automatically and rapidly upon a loss of primary electric power to the PVVS or HAW ventilation system. • The diesel generator is qualified to PC3+ seismic criteria so that during and after a seismic event the diesel generator will continue to maintain its capability to provide electric power to Safety Significant active SSCs.	The functional requirements of the diesel generator are as follows (required when HAW is in the HAW Area): • Provide sufficient electric power to operate the HAW PVVS and HAW ventilation system if the primary power source is not available. • Come online within sixty seconds after loss of normal power. • Capable of running for seven days without refill of fuel. • Continue operation during and after all design basis events to provide electric power to the HAW PVVS and HAW ventilation system.	Load tests verify diesel generator output is sufficient to provide electric power to the HAW PVVS and the HAW ventilation system. Start tests and verification of ATS ensure response to loss of normal power. Verification, inspection and maintenance of fuel and generator starting battery. Designed and installed to PC3+ seismic criteria.	LCO to define modes, and requirements for operability, surveillances, responses, testing, and maintenance.

Table 4.5-1 Specific Administrative Controls

Chapter 4 Section	Specific Administrative Control	Chapter 3 Accident Reference	Safety Function	Functional Requirements	Performance Criteria	TSR
4.5.1	RPP	Contamination/ exposure	The only credited controls that limit consequences to the immediate FW (WG1) from contamination or exposure events by the following: • All undiluted HAW samples are handled outside gloveboxes in a secondary (sample) container that prevents the primary sample container from releasing liquid in the event it is dropped while being handled outside of the glovebox. • Procedures and equipment are specified to prevent a sample needle from puncturing hands (e.g., needle shroud, leather gloves and, tools for changing needles)	HAW samples will be transported in a secondary container that will not leak. Secondary container is designed, tested, and periodically verified not to leak during transport, including spills, drops, etc. Training for use and response if dropped. Tools to prevent the sampling needle from contacting the hand will be used when sampling needles will be used. Sampling needle tools specified in procedures and training. Tools have been tested for application.	Ensure that workers have been trained and use the proper tools for special waste handling, such as sample transport and needle sampling.	SAC - Directive Action
4.5.2	ERP		A primary control that limits consequences to FWs (WG1 and WG2) from a fire that engulfs the entire waste drums storage pad by requiring response.	Procedures and training indicate a response for defined conditions over a specified egress path to a defined rally point. Periodic verification of implementation and program.	Ensure workers respond correctly to a fire.	SAC-Directive Action

Table 4.5-1 Specific Administrative Controls (Continued)

Chapter 4 Section	Specific Administrative Control	Chapter 3 Accident Reference	Safety Function	Functional Requirements	Performance Criteria	TSR
4.5.3	WACP	Fire, spills, explosion, NPH, and external events	A primary control for drums in the cementation process limiting physical consequences to the immediate FW (WG1) and a secondary control preventing an explosion for all workers (WG1, WG2, and WG3) in the HAW process vessels by the following: • Prevents explosion in a TRU waste drum by; maintaining vent paths from the drum, thus preventing buildup of hydrogen; and by prohibiting the presence of flammable liquids in the waste drums, thus preventing the buildup of VOCs. • Protect the radionuclide content assumptions used in the calculation of hydrogen generation rates and time to LFL • Prevents introduction of sufficient TBP to result in a runaway reaction. WACP also includes SACs protecting hazards/accident analysis and criticality MAR assumptions and conditions.	Vent paths will be adequately designed, installation verified and maintained for cemented drums. Cemented drums in inventory must have the vent capability verified periodically. Concentrations of primary radionuclides should be provided prior to transferring any HAW/LAW solution to WSB to ensure MAR, hazards/accident analysis and criticality evaluation and assumptions. Radionuclide concentrations should be verified and tracked. Most of the data should be used to verify compliance with the Inventory Control Program. Periodic verification of implementation and program.	Prevent flammable gas explosions in the cemented waste drums and HAW vessels. Protects assumptions of MAR used in analyses	SAC- LCO
4.5.4	TLPP	Spills	A primary control for preventing spills (WG1 and WG2) from the HAW transfer (receipt) line due to inadvertent excavation by the following: • Providing an underground indicator over the line to identify it during any excavation activities in the vicinity of the line • Providing appropriate markings to clearly identify the location of the line	An appropriate underground indicator should be placed over the transfer line and periodically verified for function and placement. Transfer line markings, clearly visible to workers, including heavy equipment operators, should be displayed and verified in place and legible and periodic verification of implementation and program.	Prevent spills due to inadvertent excavation of the HAW transfer line.	SAC-Directive Action
4.5.5	Transfer Control Program	Spills	A primary control for preventing spills (WG1 and WG2) from the HAW transfer line due to breaching of the line while exposed for maintenance	May include temporary vehicle or personnel barriers, specific worker training, and restriction on HAW transfers during bad weather, etc. Includes procedures and training and periodic verification of implementation and program.	Prevent spills due to breaching of the transfer line while exposed for maintenance.	SAC-LCO

Table 4.5-1 Specific Administrative Controls (Continued)

Chapter 4 Section	Specific Administrative Control	Chapter 3 Accident Reference	Safety Function	Functional Requirements	Performance Criteria	TSR
4.5.6	Fire Protection Program	Fires	A secondary control for limiting high consequence fire events to all workers (WG1, WG2, and WG3) by minimizing transient combustibles in the HAW process room. • FPP also includes SACs for protecting assumptions in hazard and accident analysis including no storage of flammable liquid or gas in HAW process room.	Procedures and training for verification of limited or no transient combustibles, flammable liquid/gas in HAW process room Periodic verification of implementation and program should be performed.	Limit the frequency and intensity of potential fires, thus limiting consequences to all workers.	SAC-LCO
4.5.7	Inventory Control Program	Airplane crash, MAR for all events	A primary control for limiting consequences to all workers (WG1, WG2, and WG3) from a small plane crash and resultant fire, by limiting the MAR. • Inventory Control Program also includes SACs for protecting assumptions in hazard and accident analysis including: limiting MAR for criticality incredibility and all bounding accidents, and limiting waste drum configurations in the waste storage building and in the WSB.	Procedures, training, and validated data base for verification of MAR for bounding events and criticality incredibility. Procedures and training for limiting and maintaining the number of waste drums stored in the waste storage building and in the WSB, including limit on stacking drums two high. Periodic verification of implementation and program.	Limit the MAR to the analyzed inventory and configuration, thus bounding consequences and event frequencies to current analyses.	SAC-LCO
4.5.8	Protection of evaporator steam coil integrity	Leak	The only control for preventing a leak (WG1 and WG2) of HAW liquid into the steam system, by doing periodic surveillances and maintenance. System chemical corrosive environment (e.g., pH) will be monitored and maintained, structural integrity will be periodically evaluated, and coil integrity will be periodically verified through coil pressure testing and steam system radiation monitoring.	May include corrosive chemical monitoring and maintenance, structural integrity surveillances, and verification through radiation detection in the steam system and periodic pressure testing of the steam coils. Instrumentation, procedures, training for chemical corrosion monitoring (e.g., pH), radiation detection in the steam loop, and performing integrity test of the evaporator steam coils will be provided to ensure function. Periodic verification of implementation and program.	Prevents a leak from the evaporator entering the steam coils and the subsequent radiation exposure to FWs in the unprotected areas of the steam system.	SAC-LCO

Table 4.5-1 Specific Administrative Controls (Continued)

Chapter 4 Section	Specific Administrative Control	Chapter 3 Accident Reference	Safety Function	Functional Requirements	Performance Criteria	TSR
4.5.9	Site Work Control Program	External Events	The Site Work Control Program is a primary control for protecting all workers (WG1, WG2, and WG3) by preventing external impacts to the WSB that could result in a hazardous material release.	Procedures and training, along with the configuration management program and USQ process to ensure that all external work activities are evaluated for affect on safety attributes of the WSB. Periodic verification of program and implementation.	Prevents unanalyzed external events from affecting safety assumptions of the WSB structure and SSCs.	SAC-Directive Action
4.5.10	Traffic Control Program	External Events	The Traffic Control Program is the only control for limiting consequences to all workers (WG1, WG2, and WG3) from a spill, fire, or explosion in the HAW process room by preventing vehicles from impacting the HAW process room exterior wall.	Vehicle restrictions (speed limit, posted vehicle travel areas), barriers protecting critical areas (HAW process room exterior wall, diesel generator and diesel storage tank) training and procedures. Periodic verification of program and implementation.	Prevent vehicles from impacting the HAW process room exterior wall.	SAC-LCO

WASTE SOLIDIFICATION BUILDING PRELIMINARY DOCUMENTED SAFETY ANALYSIS

CHAPTER 5

DERIVATION OF TECHNICAL SAFETY REQUIREMENTS

JULY 2008

UNCLASSIFIED

DOES NOT CONTAIN UNCLASSIFIED CONTROLLED NUCLEAR INFORMATION

DC & Reviewing Official: David Allison
WSMS

Basis: IG-SR-03, 02/04
Date: 5/06/08

SAVANNAH RIVER SITE
Aiken, SC 29808 • www.srs.gov

PREPARED FOR THE U.S. DEPARTMENT OF ENERGY UNDER CONTRACT NO. DE-AC09SR18500

DISCLAIMER

This document was prepared by Washington Safety Management Solutions LLC (WSMS), under contract with Washington Savannah River Company (WSRC), subject to the warranty and other obligations of that contract and in furtherance of WSRC's contract with the United States Department of Energy (DOE).

Release to and Use by Third Parties. As it pertains to releases of this document to third parties, and the use of or reference to this document by such third parties in whole or in part, neither WSMS, WSRC, DOE, nor their respective officers, directors, employees, agents, consultants or personal services contractors (i) make any warranty, expressed or implied, (ii) assume any legal liability or responsibility for the accuracy, completeness, or usefulness, of any information, apparatus, product or process disclosed herein or (iii) represent that use of the same will not infringe privately owned rights. Reference herein to any specific commercial product, process, or service by trademark, name, manufacture or otherwise, does not necessarily constitute or imply endorsement, recommendation, or favoring of the same by WSMS, WSRC, DOE or their respective officers, directors, employees, agents, consultants or personal services contractors. The views and opinions of the authors expressed herein do not necessarily state or reflect those of the United States Government or any agency thereof.

CONTENTS

PAGE

5.0 DERIVATION OF TECHNICAL SAFETY REQUIREMENTS 5.1-1

5.1 INTRODUCTION 5.1-1

5.2 REQUIREMENTS 5.2-1

5.3 TECHNICAL SAFETY REQUIREMENT COVERAGE 5.3-1

5.4 DERIVATION OF FACILITY MODES 5.4-1

5.5 TECHNICAL SAFETY REQUIREMENTS DERIVATION 5.5-1

5.5.1 Engineered Controls-Limiting Conditions of Operations 5.5-1

5.5.1.1 High Activity Waste Process Vessel Ventilation System 5.5-1

5.5.1.2 High Activity Waste Process Room Ventilation System 5.5-2

5.5.1.3 High Activity Waste Cementation Enclosure Ventilation System 5.5-3

5.5.1.4 High Activity Waste Sample Glovebox Ventilation System 5.5-4

5.5.1.5 Laboratory Glovebox Ventilation System 5.5-5

5.5.1.6 High Activity Waste Area and Cementation Area Fire Suppression Systems 5.5-6

5.5.1.7 High Activity Waste and Low Activity Waste Evaporator High Steam Pressure Interlocks 5.5-7

5.5.1.8 High Activity Waste and Low Activity Waste Evaporator High Temperature Interlocks 5.5-8

5.5.1.9 Standby Diesel Generator for Active Safety Significant Engineered Controls 5.5-8

CONTENTS (continued)

PAGE

5.5.2 Administrative Controls-Limiting Conditions of Operations 5.5-9

5.5.2.1 Waste Acceptance Criteria-Receipt Criteria 5.5-10

5.5.2.2 Waste Acceptance Criteria-Transuranic Waste 5.5-11

5.5.2.3 High Activity Waste Transfer Control Program 5.5-11

5.5.2.4 Fire Protection Program - Control of Combustibles 5.5-12

5.5.2.5 Fire Protection Program - High Activity Waste Process Room Flammable Gases and Liquids 5.5-12

5.5.2.6 Inventory Control Program-Radionuclide Limits 5.5-13

5.5.2.7 Inventory Control Program-Transuranic Waste Drum Limits 5.5-14

5.5.2.8 High Activity Waste Evaporator Steam Coil Integrity Protection Program 5.5-15

5.5.3 Administrative Controls-Directive Actions 5.5-15

5.5.4 Administrative Controls-Safety Management Programs 5.5-16

5.6 DESIGN FEATURES 5.6-1

5.7 INTERFACE WITH TECHNICAL SAFETY REQUIREMENTS FROM OTHER FACILITIES 5.7-1

5.8 REFERENCES 5.8-1

ACRONYMS

AC	Administrative Control
CFR	Code of Federal Regulations
CHAP	Consolidated Hazard Analysis Process
DA	Directive Action
DF	Design Feature
DOE	U. S. Department of Energy
DSA	Documented Safety Analysis
EG	Evaluation Guideline
HAW	High Activity Waste
HEPA	High Efficiency Particulate Air
HVAC	Heating, Ventilation and Air Conditioning
LAW	Low Activity Waste
LCO	Limiting Condition for Operations
LFL	Lower Flammability Limit
MAR	Material at Risk
MFFF	Mixed Oxide Fuel Fabrication Facility
MOI	Maximally-exposed Offsite Individual
NPH	Natural Phenomenon Hazard
PDCF	Pit Disassembly and Conversion Facility
PDSA	Preliminary Documented Safety Analysis
PVVS	Process Vessel Ventilation System
SAC	Specific Administrative Control
SMP	Safety Management Program
SR	Surveillance Requirements
SRS	Savannah River Site
SSC	Structure, System, and Component
STD	Standard
TRU	Transuranic
TSR	Technical Safety Requirement
WAC	Waste Acceptance Criteria
WSB	Waste Solidification Building
WSRC	Washington Savannah River Company

5.0 DERIVATION OF TECHNICAL SAFETY REQUIREMENTS

This chapter of the Waste Solidification Building (WSB) Preliminary Documented Safety Analysis (PDSA) is a presentation of information that would be used to develop Technical Safety Requirements (TSRs) for the WSB. This information was based on WSB design details available at the time this chapter was written. Where information will require additional input for TSR development, a note has been included in the appropriate section of this PDSA.

5.1 INTRODUCTION

The purpose of this chapter is to provide information that will satisfy the requirements in Title 10, Code of Federal Regulations (CFR), Part 830 (Ref. 1) and the U. S. Department of Energy (DOE) standard (STD) DOE-STD-3009-94 (Ref. 2). Specifically, this chapter includes information necessary to derive TSRs for the WSB including the following:

- Limiting Conditions for Operation (LCOs) and Surveillance Requirements (SRs)
- Specific Administrative Controls (SACs) and Safety Management Programs (SMPs)
- Passive Design Features (DFs) credited in the WSB hazard analysis
- TSRs from other facilities that could affect the WSB safety basis

The scope of the information included in this chapter is that necessary to develop TSRs for operation of the WSB, the waste storage pad, transfer lines from the Mixed Oxide Fuel Fabrication Facility (MFFF) and the Pit Disassembly and Conversion Facility (PDCF), and support structures associated with the WSB (e.g., standby diesel generators).

Because the WSB is expected to be a Hazard Category 2 nuclear facility (nonreactor nuclear facility), TSRs are expected to be necessary. The information presented in this chapter was developed from a detailed hazard analysis that has been described in Chapter 3 of this PDSA. The information given in this chapter of this PDSA is expected to be the basis for developing TSRs that will ensure implementation of the essential features of the control set developed during the WSB hazard analysis.

This chapter of the WSB PDSA includes specifications for significant Defense In Depth controls and Safety Significant controls necessary to protect onsite personnel. Because no event was identified that could result in consequences exceeding the Evaluation Guideline (EG) for the Maximally-exposed Offsite Individual (MOI), no Safety Class control was needed.

Chapter 5 of this PDSA builds on the control functions determined to be essential in Chapter 3 and Chapter 4. In addition, input from Chapter 2 was used to develop some of the information given in this chapter of this PDSA. When appropriate, information from previous chapters of this PDSA has been referenced rather than reproduce details that have been adequately described elsewhere in this PDSA.

5.2 REQUIREMENTS

The objective of this section of this PDSA is to identify the DOE orders, design codes, standards, and regulations that are required to establish the safety basis for the WSB facility. The TSR information given in this chapter of the WSB PDSA has been developed according to the following DOE directives and Washington Savannah River Company (WSRC) implementing documents:

- Nuclear Safety Management, Title10, CFR Part 830, Subpart B (Ref. 1)
- Preparation Guide for U.S. Department of Energy Nonreactor Nuclear Facility Safety Analysis Reports, DOE-STD-3009-94, (Ref. 2)
- Occupational Radiation Protection, Title10, CFR Part 835 (Ref. 3)
- Specific Administrative Controls, DOE-STD-1186-2004 (Ref. 4)
- Implementation Guide for Use in Developing Documented Safety Analyses to Meet Subpart B of 10 CFR 830, DOE G 421.1-2 (Ref. 5)
- Implementation Guide for Use in Developing Technical Safety Requirements, DOE G 423.1-1 (Ref. 6)
- Standards/Requirements Identification Document, WSRC-RP-94-1268 (Ref. 7)
- Facility Safety Document Manual, WSRC Procedure Manual 11Q, (Ref. 8)
- "Functional Classifications," Procedure 2.25, Conduct of Engineering and Technical Support, WSRC Procedure Manual E7, (Ref. 9)
- Technical Safety Requirements Methodology Manual, WSRC-TR-2003-00573, Rev. 2 (Ref. 10)

5.3 TECHNICAL SAFETY REQUIREMENT COVERAGE

This section of the PSDA is a summary of the features that make up the WSB control strategy. More detailed descriptions of these features are given in subsequent sections of this chapter. The TSRs will ensure that the safety functions outlined in Chapters 3 and 4 of this PDSA are implemented when required and they preserve the initial conditions and assumptions upon which the accident scenarios were based. A complete list of these controls has been given in Table 3.3-1.

Controls have been grouped in Table 3.3-1 according to their functional classification first and then according to the TSR mechanism by which they are to be implemented in the WSB. The Safety Significant controls have been listed in Table 3.3-1. No Safety Class controls were included in the WSB control set because the Consolidated Hazards Analysis Process (CHAP) team did not identify an accident scenario that would challenge the MOI EG (Ref. 2).

Within each of the functional classifications, Structures, Systems, and Components (SSCs) have been listed in Table 3.3-1 before the Administrative Controls (ACs). The SSCs have been identified as controls that are to be implemented at the WSB through LCOs and controls that are to be implemented at the WSB as DF. For the LCOs, the associated LCO number has been given in Table 3.3-1

In Table 3.3-1, each AC has been identified as an SAC or as part of an SMP. The SACs have been further divided into controls that will be implemented through LCOs and controls that will be implemented through Directive Actions (DAs). For the LCOs, the associated LCO number has been given in Table 3.3-1. Where applicable, the DA numbers have also been given in Table 3.3-1. Also included in Table 3.3-1 are references to the applicable subsections in Chapters 4 and 5.

For each of these controls, information necessary to develop TSR coverage has been included in the following sections of this chapter. This information has been organized according to the following:

- Subsection 5.5.1: SSCs that are to be implemented as LCOs and SRs
- Subsection 5.5.2: Candidate SACs that would be implemented as LCOs and SRs
- Subsection 5.5.3: Candidate SACs that would be implemented as DAs
- Section 5.6: SSCs that are to be implemented as DFs

5.4 DERIVATION OF FACILITY MODES

This section of the PDSA is a general description of the anticipated WSB operating modes. The purpose of this section is to provide a general description of the objectives and allowable activities associated with each of the WSB operating modes. A detailed description will be included in the facility Documented Safety Analysis (DSA), after facility procedures, staffing expectations, and design have more fully matured. In this PDSA, no attempt has been made to define staffing requirements. The following WSB facility modes are currently expected to be applicable to TSRs:

- Normal Operation: Receipt or processing of MFFF and PDCF waste streams
- Warm Standby: Radioactive material may be present, but processing is limited
- Cold Standby: Radionuclide inventory and processing are limited

The objective of Normal Operations will be to receive and solidify the Low Activity Waste (LAW) and High Activity Waste (HAW) streams from MFFF and PDCF and to stage and disposition the resulting solidified waste. All TSRs described in this PDSA are expected to be applicable during Normal Operations.

The objective of the Warm Standby mode will be to establish a safe condition in which a task (e.g., a maintenance task) can be performed or a facility condition can be evaluated. Because processing of radioactive material will be limited during Warm Standby, some TSRs will not apply. Before they are performed, activities requiring processing or movement of radioactive material will be evaluated to ensure compliance with the WSB safety basis. During Warm Standby, the radionuclide inventory controls may be similar to Normal Operations controls.

The objective of Cold Standby will be the same as Warm Standby except that lower radionuclide inventory limits will be allowed. As a result, some additional TSRs will not apply. Before they are performed, activities requiring processing or movement of radioactive material will be evaluated to ensure compliance with the WSB safety basis.

5.5 TECHNICAL SAFETY REQUIREMENTS DERIVATION

This section of the PDSA is a brief description of the controls that would be implemented as TSRs based on the WSB CHAP (Ref. 11). The information in this section was based on WSB design details available at the time that this document was prepared. Some of the specific information needed to fully develop the TSRs is not currently available. These details will be included in the WSB DSA. For this PDSA, no attempt has been made to define recovery actions or times, to specify SR frequencies or to provide more than a list of the SRs. In addition, DAs and SMPs have been listed but not described.

Section 5.5 descriptions have been organized according to type of TSR (i.e., LCOs, DAs, and SMPs).

5.5.1 ENGINEERED CONTROLS-LIMITING CONDITIONS OF OPERATIONS

This subsection is a description of the engineered TSRs that would be implemented at WSB as LCOs. Chapter 4, Section 4.4, includes descriptions of these SSCs and descriptions of the WSB DFs that perform a credited safety function. Section 5.6 is a description of the WSB DF TSRs. The descriptions in this subsection (Subsection 5.5.1) have been organized according to the types of engineered controls. The descriptions in this subsection have been presented in the following order:

1. Ventilation systems
2. Fire suppression systems
3. Interlocks
4. Supporting systems

5.5.1.1 High Activity Waste Process Vessel Ventilation System

The HAW Process Vessel Ventilation System (PVVS) provides sufficient dilution air flow to maintain the flammable gas concentrations below 25 % of the Lower Flammability Limit (LFL) in the HAW process vessels and drums in the cementation enclosure at the mixing station (CEM-2-002, HAL-2-005, HAL-2-006, FW-7-002, and FW-7-004). In addition, the HAW PVVS provides filtration of airborne hazardous material that could be released during explosion or Natural Phenomena Hazard (NPH) events (FW-1-001, HAL-2-008, and FW-7-004). Components of the system that are necessary for meeting these safety functions are Safety Significant SSCs (e.g., the diesel generator). The following include more detailed descriptions of the HAW PVVS:

- Chapter 2, Subsection 2.6.2, of this PDSA (description of the HAW PVVS)
- Chapter 4, Subsection 4.4.4, of this PDSA (credited features of this SSC)
- WSB system design description for Heating, Ventilation and Air Conditioning (HVAC) system (Ref. 12)

5.5.1.1.1 OPERATING HIGH ACTIVITY WASTE PROCESS VESSEL VENTILATION SYSTEM (LCO 3.1.1)

The HAW PVVS is to be operating when HAW material is in a HAW process vessel or in a drum that is in the cementation fill station. A determination will be made as to the amount of HAW material that can be present without creating the potential for the generation of a flammable mixture in the vessel headspace during an HAW PVVS outage (Ref. 13). To be operating the HAW PVVS must perform the following:

- Provide sufficient dilution air flow to keep the flammable gas concentration below 25% of the LFL in the HAW process room vessels
- Provide sufficient dilution air flow to keep the flammable gas concentration below 25% of the LFL in any drum in the cementation fill station
- Provide filtration through High Efficiency Particulate Air (HEPA) filters that are in place and operational according to applicable Savannah River Site (SRS) ventilation system requirements

5.5.1.1.2 SURVEILLANCE REQUIREMENTS

While no attempt has been made to incorporate surveillance frequencies into this PDSA, target frequencies have been established for most of the PVVS surveillances. These target frequencies have been documented in Reference 14. Actual frequencies will be determined based on final design. To ensure the HAW PVVS is meeting the requirements of LCO 3.1.1, the following surveillances would apply:

- SR 4.1.1.1. Calibration of differential pressure and inlet air flow monitoring instrumentation
- SR 4.1.1.2. HEPA filter efficiency test (to be performed according to Reference 15, WSRC 2Y Procedure Manual)
- SR 4.1.1.3. Verification of standby SSCs (including exhaust fan) alignment for automatic start
- SR 4.1.1.4. Functional test of standby SSCs automatic start interlock

5.5.1.2 <u>High Activity Waste Process Room Ventilation System</u>

The HAW process room ventilation system is part of the HAW ventilation system. The HAW process room ventilation system will provide confinement of airborne hazardous material that could be released during an explosion (Event HAL-2-007) or a spill (HAL-3-003, HAL-3-004, HAL-3-005, and HAL-3-006) in the process rooms. The following include more detailed descriptions of the HAW process room ventilation system:

- Chapter 2, Subsection 2.6.3.1, of this PDSA (system description)
- Chapter 4, Subsection 4.4.5.1, of this PDSA (credited features of this SSC)

- WSB system design description for HVAC system (Ref. 12)

The HAW process room ventilation system is not credited to perform an active function during or following a NPH event.

5.5.1.2.1 OPERATING HIGH ACTIVITY WASTE PROCESS ROOMS VENTILATION SYSTEM (LCO 3.1.2)

The HAW process room Ventilation System is to be operating when HAW material is in the HAW process room. A determination will be made as to the amount of HAW material that can be present when the ventilation system is not operating. Results of this determination will be incorporated in the WSB DSA. To be operating, the HAW process room Ventilation System must perform the following:

- Maintain the HAW process room at negative differential pressure with respect to the WSB general area

- Provide filtration through HEPA filters that are in place and operational according to applicable SRS ventilation system requirements

5.5.1.2.2 SURVEILLANCE REQUIREMENTS

The HAW process room ventilation system is a subsystem of the HAW ventilation system. Other subsystems of the HAW ventilation system include the HAW cementation enclosure ventilation system, the HAW sample glovebox ventilation system, and the laboratory glovebox ventilation system. Operation of these subsystems is ensured by LCOs described in the following subsections; however, SRs for the HAW ventilation system will ensure the operation of all subsystems. To ensure the HAW process room ventilation system is meeting the requirements of LCO 3.1.2, the following surveillances will be performed:

- SR 4.1.1.1. Calibration of differential pressure monitoring instrumentation
- SR 4.1.1.2. HEPA filter efficiency test (to be performed according to Reference 15, WSRC 2Y Procedure Manual)
- SR 4.1.1.3. Verification of standby SSCs (including exhaust fan) alignment for automatic start
- SR 4.1.1.4. Functional test of standby SSCs automatic start interlock

5.5.1.3 <u>High Activity Waste Cementation Enclosure Ventilation System</u>

The HAW cementation enclosure ventilation system is part of the HAW ventilation system. The HAW cementation enclosure ventilation system will provide confinement of airborne hazardous material that could be released during a spill (Events CEM-3-001, CEM-3-002, and CEM-3-003) in the HAW cementation enclosure. The following include more detailed descriptions of the HAW cementation enclosure ventilation system:

- Chapter 2, Subsection 2.6.3.4, of this PDSA (system description)
- Chapter 4, Subsection 4.4.5.2, of this PDSA (credited features of this SSC)
- WSB system design description for the HVAC system (Ref. 12)

5.5.1.3.1 OPERATING HIGH ACTIVITY WASTE CEMENTATION ENCLOSURE VENTILATION SYSTEM (LCO 3.1.3)

The HAW cementation enclosure ventilation system is to be operating when HAW material is in a HAW cementation enclosure. A determination will be made as to the amount of HAW material that can be present when the ventilation system is not operating. To be operating, the HAW cementation enclosure ventilation system must perform the following:

- Maintain the HAW cementation enclosure at a negative differential pressure with respect to the general HAW cementation area
- Provide filtration through HEPA filters that are in place and operational according to applicable SRS ventilation system requirements

5.5.1.3.2 SURVEILLANCE REQUIREMENTS

The cementation enclosure ventilation system is part of the HAW ventilation system. Surveillance requirements of the HAW ventilation system have been listed in Subsection 5.5.1.2.2. These requirements may require testing of local cementation enclosure ventilation loss of air flow or differential pressure alarms or gauges. Requirements will be consistent with specifications of the SRS and WSB Radiation Protection Program.

5.5.1.4 High Activity Waste Sample Glovebox Ventilation System

The HAW sample glovebox ventilation system is part of the HAW ventilation system. The HAW sample glovebox ventilation system will provide confinement of airborne hazardous material that could be released during a spill (HAL-3-008) in the HAW sample glovebox. The following include more detailed descriptions of the HAW sample glovebox ventilation system:

- Chapter 2, Subsection 2.6.3.2, of this PDSA (system description)
- Chapter 4, Subsection 4.4.5.3, of this PDSA (credited features of this SSC)
- WSB system design description for the HVAC System (Ref. 12)

5.5.1.4.1 OPERATING HIGH ACTIVITY WASTE SAMPLE GLOVEBOX VENTILATION SYSTEM (LCO 3.1.4)

The HAW sample glovebox ventilation system must be operating when HAW material is in the HAW glovebox. A determination will be made as to the amount of HAW material that can be

present when the ventilation system is not operating. To be operating, the HAW sample glovebox ventilation system must perform the following:

- Maintain the HAW sample glovebox at a negative differential pressure with respect to the HAW sample room
- Provide filtration through HEPA filters that are in place and operational according to applicable SRS ventilation system requirements

5.5.1.4.2 SURVEILLANCE REQUIREMENTS

The HAW sample glovebox ventilation system is part of the HAW ventilation system. SRs of the HAW ventilation system have been listed in Subsection 5.5.1.2.2. These requirements may require testing of local sample glovebox ventilation loss of air flow or differential pressure alarms or gauges. Requirements will be consistent with specifications of the SRS and WSB Radiation Protection Program.

5.5.1.5 Laboratory Glovebox Ventilation System

The laboratory glovebox ventilation system is part of the HAW ventilation system. The laboratory glovebox ventilation system will provide confinement of airborne hazardous material that could be released during a spill (Event LAB-3-005) in the laboratory glovebox. The following include more detailed descriptions of the laboratory glovebox ventilation system:

- Chapter 2, Subsection 2.6.3.3, of this PDSA (system description)
- Chapter 4, Subsection 4.4.5.4, of this PDSA (credited features of this SSC)
- WSB system design description for the HVAC system (Ref. 12)

5.5.1.5.1 OPERATING LABORATORY GLOVEBOX VENTILATION SYSTEM (LCO 3.1.5)

The laboratory glovebox ventilation system must be operating when HAW material is in the laboratory glovebox. A determination will be made as to the amount of HAW material that can be present when the ventilation system is not operating. To be operating, the laboratory glovebox ventilation system must perform the following:

- Maintain the laboratory glovebox at a negative differential pressure with respect to the WSB laboratory room
- Provide filtration through HEPA filters that are in place and operational according to applicable SRS ventilation system requirements

5.5.1.5.2 SURVEILLANCE REQUIREMENTS

The Laboratory Glovebox Ventilation System is part of the HAW Ventilation System. SRs of the HAW Ventilation System have been listed in Subsection 5.5.1.2.2. These requirements may require testing of local laboratory glovebox ventilation loss of air flow or differential pressure alarms or gauges. Requirements will be consistent with specifications of the SRS and WSB Radiation Protection Program.

5.5.1.6 High Activity Waste Area and Cementation Area Fire Suppression Systems

The HAW area and cementation area fire suppression systems will be part of the general WSB fire suppression system. The WSB fire suppression system will be an automatic wet-pipe sprinkler system. The HAW area and cementation area fire suppression systems are supplied water by the F-Area fire water loop. The following includes more detailed descriptions of the HAW area and cementation area fire suppression systems:

- Chapter 4, Subsection 4.4.6, of this PDSA (credited features of this SSC)
- Project Fire Hazards Analysis for Waste Solidification Building (Ref. 16)
- WSB system design description for Balance of Plant Support System (Ref. 17)

Components of the HAW area and cementation area fire suppression systems that are important to the credited safety features include the sprinklers and piping. An adequate water supply will be ensured through the Fire Protection Program. Additional major components that were not credited as providing a Safety Significant function include water hydrants, fire extinguishers, fire alarms, a backup power supply (battery), and an alarm control panel.

The HAW area and cementation area fire suppression systems are credited with performing Safety Significant functions in a HAW process room fire (Event HAL-1-001), a cementation area fire (CEM-1-001), and in a facility wide fire (Event FW-1-001). If a fire were to start in the HAW area or in the cementation area, the fire suppression system is credited with preventing small fires from becoming large enough to cause a significant release of radioactive material. The sprinkler system is not credited to function during or following a NPH event.

The HAW area and cementation area fire suppression systems TSRs must ensure that the systems are operational.

5.5.1.6.1 OPERABLE HIGH ACTIVITY WASTE AREA AND CEMENTATION AREA FIRE SUPPRESSION SYSTEMS (LCO 3.1.6)

The HAW area and cementation area fire suppression systems are to be operable when HAW material is present. To be operable, the HAW area and cementation area fire suppression systems must be capable of the following:

- Activate and provide the required sprinkler flow rate

5.5.1.6.2 SURVEILLANCE REQUIREMENTS

To ensure that the HAW area and cementation area fire suppression systems are meeting the requirements of LCO 3.1.6, the following surveillances will be performed:

- SR 4.1.6.1. Visual inspections of sprinkler pipe, fittings, and heads
- SR 4.1.6.2. Functional test of main system, including header drain function
- SR 4.1.6.3. Verification of adequate fire water supply

5.5.1.7 High Activity Waste and Low Activity Waste Evaporator High Steam Pressure Interlocks

The HAW and LAW evaporator high steam pressure interlocks will prevent the evaporator HAW or LAW temperature from reaching that required for rapid decomposition of organics into a flammable gas (Events HAL-2-004 and LAL-2-004) by limiting the heat that is available to raise the temperature of the HAW and LAW in the evaporators. The following include more detailed descriptions of the HAW and LAW evaporator high steam pressure interlocks:

- Chapter 2, Subsection 2.7.1, of this PDSA (summary description)
- Chapter 4, Subsection 4.4.7, of this PDSA (credited features of this SSC)
- WSB system design description for Balance of Plant Support System (Ref. 17)

The HAW and LAW evaporator high steam pressure interlocks are not credited to function during or following a NPH event.

5.5.1.7.1 OPERATIONAL HIGH ACTIVITY WASTE AND LOW ACTIVITY WASTE EVAPORATOR HIGH STEAM PRESSURE INTERLOCKS (LCO 3.1.7)

The evaporator high steam pressure interlock is to be operational when the evaporator temperature has reached a preset temperature above which fluctuations in the steam supply does not interfere with operation of the interlock. To implement this method of operation, two modes of operation may need to be defined for the evaporator, an evaporator startup mode in which the pressure interlock is not engaged and an evaporator operating mode in which the pressure interlock must be engaged. To be operational, the evaporator high steam pressure interlocks must perform the following:

- Isolate the steam supply prior to the steam pressure exceeding 25 pounds per square inch, gauge

5.5.1.7.2 SURVEILLANCE REQUIREMENTS

To ensure that the HAW and LAW evaporator high steam pressure interlocks are meeting the requirements of LCO 3.1.7, the following surveillances will be performed:

- SR 4.1.7.1. Pressure instrumentation calibration check
- SR 4.1.7.2. Pressure interlock functional test

5.5.1.8 High Activity Waste and Low Activity Waste Evaporator High Temperature Interlocks

The HAW and LAW evaporator high temperature interlocks will prevent the evaporatory HAW or LAW temperature from reaching that required for rapid decomposition of organics into a flammable gas (Events HAL-2-004 and LAL-2-004) by limiting the temperature of the HAW and LAW in the evaporators. The following include more detailed descriptions of the HAW and LAW evaporator high temperature interlocks:

- Chapter 2, Subsection 2.7.1, of this PDSA (summary description)
- Chapter 4, Subsection 4.4.7, of this PDSA (credited features of this SSC)
- WSB system design description for Balance of Plant Support System (Ref. 16)

The HAW and LAW evaporator high temperature interlocks are not credited to function during or following a NPH event.

5.5.1.8.1 OPERATIONAL HIGH ACTIVITY WASTE AND LOW ACTIVITY WASTE EVAPORATOR HIGH TEMPERATURE INTERLOCKS (LCO 3.1.8)

The evaporator high temperature interlock is to be operational when steam is being supplied to the HAW or LAW Evaporator. To be operational, the evaporator high temperature interlocks must perform the following:

- Isolate the steam supply prior to the evaporator temperature exceeding 130° C

5.5.1.8.2 SURVEILLANCE REQUIREMENTS

To ensure that the HAW and LAW evaporator high temperature interlocks are meeting the requirements of LCO 3.1.8, the following surveillances will be performed:

- SR 4.1.8.1. Temperature instrumentation calibration check
- SR 4.1.8.2. Temperature interlock functional test

5.5.1.9 Standby Diesel Generator for Active Safety Significant Engineered Controls

The WSB standby diesel generator will provide sufficient electrical power for active safety significant engineered controls to continue performing the credited safety functions if power is interrupted. In particular, the WSB standby diesel generator must supply sufficient electrical power for the PVVS and the HAW process room ventilation system to continue operation. The following include more detailed descriptions of the standby diesel generator:

- Chapter 2, Subsection 2.7.4, of this PDSA (summary description)
- Chapter 4, Subsection 4.4.4, of this PDSA (credited features of this SSC)

5.5.1.9.1 OPERATIONAL STANDBY DIESEL GENERATOR (LCO 3.1.9)

The standby diesel generator is to be operational when the safety functions of the WSB active Safety Significant engineered controls are required by the WSB Safety Basis. To be operational, the standby diesel generator must be capable of performing the following:

- Supply sufficient power for the HAW PVVS to continue providing sufficient dilution air flow to keep flammable gas concentrations below 25 % of the LFL in the HAW process room vessels and in any drum in the cementation fill station,

- Supply sufficient power for the HAW process room ventilation system to maintain the HAW process room at negative differential pressure with respect to the WSB general area.

5.5.1.9.2 SURVEILLANCE REQUIREMENTS

To ensure the standby diesel generation is meeting the requirements of LCO 3.1.9, the following surveillances will be performed:

- SR 4.1.9.1. Load test of WSB diesel generator system
- SR 4.1.9.2. Start test to simulate loss of offsite power
- SR 4.1.9.3. Verification of the automatic transfer switch
- SR 4.1.9.4. Verification of WSB diesel generator fuel (This surveillance is expected to include regularly scheduled verification of the diesel fuel level, removal of any water that is observed in the fuel, and measurement of the particulate levels in the fuel.)
- SR 4.1.9.5. Inspection and replace of the diesel generator starting battery (This surveillance is expected to include regularly scheduled verification of the starting battery charge and replacement.)

5.5.2 ADMINISTRATIVE CONTROLS-LIMITING CONDITIONS OF OPERATIONS

This subsection is a description of the potential SAC TSRs that may be implemented at WSB as LCOs. The DSA for the WSB will provide additional information that may be necessary for developing TSRs. The SACs must be compatible with other SACs (e.g., the Inventory Control Program) and safety management programs described in subsequent chapters of this PDSA (e.g., Quality Assurance and Configuration Control).

Chapter 4, Section 4.5, includes a description of these SACs. The descriptions in this subsection (Subsection 5.5.2) have been organized according to the types of SACs. The descriptions in this subsection have been presented in the following order:

1. Waste Acceptance Criteria (WAC)
2. HAW Transfer Control Program
3. Fire Protection Program
4. Inventory Control Program
5. Evaporator steam coil integrity protection program

5.5.2.1 Waste Acceptance Criteria-Receipt Criteria

The WAC will be necessary to prevent the radionuclide inventory (Material At Risk [MAR]) from exceeding quantities evaluated in the WSB hazard analysis and the associated Nuclear Criticality Safety Evaluation (Ref. 18). This control is necessary to protect the initial conditions assumed for most of the events evaluated. In addition, the WSB WAC is needed to prevent conditions that could lead to an explosion. A more detailed description of this control has been included in Chapter 4, Subsection 4.5.3, of this PDSA. The following will be protected through this SAC.

- Protecting the radionuclide content assumptions used in the calculation of flammable gas generation rates and time to LFL
- Protecting criticality assumptions of the amount of fissile material and enrichment of uranium
- Protecting the radionuclide content assumptions used in the MAR assumptions for most accidents (Ref. 6)

5.5.2.1.1 LIMITS ON HIGH ACTIVITY WASTE AND LOW ACTIVITY WASTE TRANSFERS TO THE WASTE SOLIDIFICATION BUILDING (LCO 3.2.1)

The following WAC shall be required of all material transferred to WSB:

- The radionuclide concentration will not exceed 2.0 grams per liter of Am-241(and the associated radionuclides) (Ref. 19)
- The yearly receipt of plutonium plus uranium-235 will not exceed 450 grams excluding material with uranium enrichment that meets the following criteria: Mass of (U-235 + 2 x Mass of U-233) / total uranium mass is less than 0.0096
- The organic content must be below the concentrations capable of supporting a red oil explosion. The maximum acceptable organic concentrations for this criterion will be defined in the WSB DSA.

5.5.2.1.2 SURVEILLANCE REQUIREMENTS

To ensure that the WAC meets the requirements of LCO 3.2.1, the following surveillances will be performed:

- SR 4.2.1.1. Pre-transfer verification of proposed transfer content
- SR 4.2.1.2. Periodic surveillance of transfer records

5.5.2.2 Waste Acceptance Criteria-Transuranic Waste

The WSB WAC will be necessary to prevent explosions in packaged transuranic (TRU) waste drums (Events CEM-2-001 and WH-2-001). These criteria ensure that the waste is packaged according to the SRS WAC for TRU waste. A more detailed description of this control has been included in Chapter 4, Subsection 4.5.3, of this PDSA. The following will be protected through this SAC:

- Waste drums are properly vented and packaged

5.5.2.2.1 TRANSURANIC WASTE ACCEPTANCE CRITERIA (LCO 3.2.2)

TRU waste drums shall be packaged according to the Solid Waste Management Facility TRU WAC. This control is applicable at all times waste is in the TRU waste drums and includes limits on the total radionuclide inventory allowed in a TRU waste drum, limits on the allowable content (chemical and physical limits), TRU waste drum container requirements, requirements for closing TRU waste drums, and requirements for storing TRU waste drums.

5.5.2.2.2 SURVEILLANCE REQUIREMENTS

To ensure that the TRU WAC are meeting the requirements of LCO 3.2.2, the following surveillances will be performed:

- SR 4.2.2.1. Verification of adequate vent installation during TRU drum packaging
- SR 4.2.2.2. Periodic surveillance of TRU waste certification program.

5.5.2.3 High Activity Waste Transfer Control Program

The external portion of the HAW transfer line will be buried. When a section of this line is exposed (e.g., for maintenance or repair), the Transfer Control Program will prevent facility workers from being exposed to a spill from the transfer line (Events TL-3-002, TL-3-004, and TL-3-005). A more detailed description of this control has been included in Chapter 4, Subsection 4.5.5, of this PDSA.

5.5.2.3.1 CONTROLS NEEDED TO TRANSFER HIGH ACTIVITY WASTE MATERIAL THROUGH AN EXPOSED HIGH ACTIVITY WASTE TRANSFER LINE (LCO 3.2.3)

During transfer of material through an exposed HAW transfer line, the following controls must be in place:

- Protective barriers (as needed) must be in place to prevent access by personnel or vehicles to the exposed portion of the HAW transfer line
- Weather conditions must be compatible with HAW transfer

5.5.2.3.2 SURVEILLANCE REQUIREMENTS

To ensure that the Transfer Control Program is meeting the requirements of LCO 3.2.3, the following surveillances will be performed:

- SR 4.2.3.1. Pre-transfer verification of Transfer Control Program controls

5.5.2.4 Fire Protection Program - Control of Combustibles

Combustible material will be limited to essential materials in the HAW process rooms, the HAW cementation area, and the waste storage pad. This control will limit the frequency and intensity of fires in these areas (Events CEM-1-001, CEM-1-002, FW-1-001, FW-6-001, FW-7-003, HAL-1-001, and WH-1-002). More detailed descriptions of the limits on combustible material have been included in Chapter 4, Subsection 4.5.6, of this PDSA.

5.5.2.4.1 LIMIT ON COMBUSTIBLE MATERIAL (LCO 3.2.4)

In the HAW process room, combustible material will be limited to essential material when HAW material is present.

5.5.2.4.2 SURVEILLANCE REQUIREMENTS

To ensure that the Fire Protection Program is meeting the requirements of LCO 3.2.4, the following surveillances will be performed:

- SR 4.2.4.1. Periodic inspection for combustible material

5.5.2.5 Fire Protection Program - High Activity Waste Process Room Flammable Gases and Liquids

Storage of flammable gases and liquids will be prohibited in the HAW process room when HAW material is present. This control will limit the frequency and intensity of fires in the HAW process rooms (Event HAL-1-001). A more detailed description of this control has been included in the following:

- Chapter 4, Subsection 4.5.6, of this PDSA (credited features of this SAC)

5.5.2.5.1 FLAMMABLE GAS AND LIQUID STORAGE PROHIBITED IN THE HIGH ACTIVITY WASTE PROCESS ROOM (LCO 3.2.5)

Storage of flammable gases and liquids will be prohibited in the HAW process room when HAW material is present.

5.5.2.5.2 SURVEILLANCE REQUIREMENTS

To ensure that the Fire Protection Program is meeting the requirements of LCO 3.2.5, the following surveillances will be performed:

- SR 4.2.5.1. Periodic inspection for flammable gases and liquid

5.5.2.6 Inventory Control Program-Radionuclide Limits

The WSB Inventory Control Program will be necessary to prevent the MAR from exceeding quantities evaluated in the WSB hazard analysis and the associated Nuclear Criticality Safety Evaluation (Ref. 18). This control is necessary to protect the initial conditions assumed for most of the events evaluated. Limits are expressed as mass of the predominant radionuclide, Am-241. Analyses assumed that other radionuclides would be associated with the Am-241 at levels specified in Chapter 3. A more detailed description of this control has been included in Chapter 4, Subsection 4.5.7, of this PDSA.

5.5.2.6.1 RADIONUCLIDE INVENTORY LIMITS SHALL NOT BE EXCEEDED (LCO 3.2.6)

The following radionuclide inventory limits shall not be exceeded in WSB at any time:

- Total WSB inventory shall not exceed 18.3 kilograms of Am-241 (and the associated radionuclides)
- A single transfer shall not exceed 2.0 kilograms of Am-241 (and the associated radionuclides)
- HAW solution shall not exceed 2 grams per liter Am-241 (and the associated radionuclides)
- Laboratory inventory shall not exceed 2 grams Am-241 (and the associated radionuclides)
- Outside the HAW process rooms and cementation area the inventory shall not exceed 420 grams of Am-241 (and the associated radionuclides)
- A single HAW vessel shall not exceed 6 kilograms ofAm-241 (and the associated radionuclides)
- A drum of HAW cemented waste shall not exceed 45 grams of Am-241(and the associated radionuclides)

- The amount of Am-241 received in the WSB must be less than 40 kilograms per year
- The amount of neptunium received in the WSB must be less than 10 kilograms per year
- The yearly receipt of plutonium plus uranium-235 will not exceed 450 grams excluding material with uranium enrichment that meets the following criteria: Mass of (U-235 + 2 x Mass of U-233) / total uranium mass is less than 0.0096.

5.5.2.6.2 SURVEILLANCE REQUIREMENTS

To ensure that the Inventory Control Program is meeting the requirements of LCO 3.2.6, the following surveillances will be performed:

- SR 4.2.6.1. Pre-transfer verification of proposed transfer content
- SR 4.2.6.2. Periodic surveillance of transfer records

5.5.2.7 Inventory Control Program-Transuranic Waste Drum Limits

The WSB Inventory Control Program will be necessary to prevent the radionuclide inventory (MAR) from exceeding quantities evaluated in the hazard analysis and to prevent the 55-gallon TRU waste drums from being stored in a configuration that was not evaluated. A more detailed description of this control has been included in Chapter 4, Subsection 4.5.7, of this PDSA.

5.5.2.7.1 CRITERIA FOR STORAGE OF TRANSURANIC WASTE DRUMS (LCO 3.2.7)

Waste drums shall be stored according to the following limits at all times:

- The radionuclide content of a single 55-gallon TRU job control waste drum shall not exceed 80 Pu-239 equivalent curies
- No more than 48 drums of TRU job control waste will be allowed at the waste storage pad
- No more than 132 drums of solidified TRU waste will be allowed at the waste storage pad
- The radionuclide content of a single 55-gallon cemented TRU drum shall not exceed 45 grams of Am-241
- TRU waste drums will not be stacked more than two drums high.

5.5.2.7.2 SURVEILLANCE REQUIREMENTS

To ensure the Inventory Control Program is meeting the requirements of LCO 3.2.7, the following surveillances will be performed:

- SR 4.2.7.1. Periodic surveillance of inventories, TRU drum configurations inventory control records.

5.5.2.8 High Activity Waste Evaporator Steam Coil Integrity Protection Program

Prior to the initiation of an evaporator operation, the integrity of the evaporator steam coil will be verified. This control will prevent a process leak into the steam system (Event HAL-3-009). A more detailed description of this control has been included in Chapter 4, Subsection 4.5.8, of this PDSA (credited features of this SAC).

5.5.2.8.1 HIGH ACTIVITY WASTE EVAPORATOR STEAM COIL INTEGRITY (LCO 3.2.8)

The steam coil integrity will be verified before the HAW evaporator is operated.

5.5.2.8.2 SURVEILLANCE REQUIREMENTS

To ensure that the HAW evaporator steam coil integrity program is meeting the requirements of LCO 3.2.8, the following surveillances will be performed:

- SR 4.2.8.1. Pressure test prior to initiation of evaporator operation
- SR 4.2.8.2. Radiation detection during evaporator operation

5.5.3 ADMINISTRATIVE CONTROLS-DIRECTIVE ACTIONS

This subsection is a description of the SAC TSRs that will be implemented as DAs. Chapter 4, Section 4.5, includes a description of these SACs. The following SACs will be implemented as DAs:

- Radiological Protection Program (secondary containers will be used when transporting undiluted HAW samples)
- Radiological Protection Program (proper equipment and procedures will be used when handling HAW sample needles)
- Radiological Protection Program (radioactive waste and laboratory samples will be properly handled)
- Event Response Program (workers will respond appropriately credited in fire events)
- HAW Transfer Line Protection Program (an underground indicator will be installed over buried HAW transfer lines)
- HAW Transfer Line Protection Program (the location of buried HAW transfer lines will be clearly posted)

- Site Work Control Program (activities in the vicinity of the WSB will be evaluated against the WSB safety documentation)
- Traffic Control Program (appropriate speed limit will be implemented on the access road to the WSB standby diesel generator tank)
- Traffic Control Program (a physical attribute will be implemented, e.g., a Jersey barrier or the access road configuration, such that it will limit the unobstructed "straightline" distance on which a vehicle can generate speed before reaching the HAW process room exterior wall)

5.5.4 ADMINISTRATIVE CONTROLS-SAFETY MANAGEMENT PROGRAMS

This subsection is a list of controls that would be implemented as SMP TSRs and that are credited with performing a Safety Significant function. Chapter 4, Section 4.4, includes a description of these controls. Attributes of some SMPs will be implemented as SACs. These attributes have been listed in Subsections 5.5.2 and 5.5.3. The following SMPs have been credited with performing Safety Significant functions, but none of these functions will be implemented as SACs:

- Site clearance permit program
- Structural Integrity Program
- Hoisting and Rigging Program
- Configuration control program
- Leak detection monitoring program
- Chemical control program

Some SMPs will only perform Safety Significant safety functions that will be implemented as SACs. The applicable attributes of these controls have been described in previous sections of this chapter. For example, the only two credited attributes of the HAW Transfer Line Protection Program are the placement of an underground indicator over the buried line and the installation of clear markings indicating the location of the transfer lines. These attributes have been listed in Section 5.5.3. The following are the WSB SMPs that are only credited with performing Safety Significant functions that will be implemented as SACs:

- HAW Transfer Control Program (SAC described in Subsections 5.5.2.3)
- Inventory Control Program (SACs described in Subsections 5.5.2.6 and 5.5.2.7)
- WAC (SACs described in Subsections 5.5.2.1 and 5.5.2.2)
- HAW Transfer Line Protection Program (SAC described in Subsection 5.5.3)

Some SMPs will perform Safety Significant safety functions that will be implemented as SACs and will perform other Safety Significant safety functions that will not be implemented as SACs. The attributes that are to be implemented as SACs have been described in previous sections of

this chapter. In addition to the SACs that have been discussed in Subsections 5.5.2 and 5.5.3, the following SMPs have other attributes that are credited with performing Safety Significant functions:

- Fire Protection Program
- Traffic Control Program
- Radiological Protection Program
- Event Response Program

5.6 DESIGN FEATURES

The WSB DFs that are credited with performing Safety Significant functions have been listed below. These WSB DFs have been listed in Table 3.3-1 and have been described in Chapter 4, Section 4.4, of this PDSA. Because the attributes, safety functions, function requirements, and performance criteria have been given in Table 3.3-1 and Chapter 4, Section 4.4, these DFs are only listed here. The DFs credited with performing Safety Significant functions are:

- WSB design and construction (DF 1.1)
- HAW area design and construction (DF 1.2)
- HAW cementation area design and construction (DF 1.3)
- HAW process piping and valves (DF 2.1)
- HAW process vessels (including steam and cooling coils) (DF 2.2)
- HAW sample lines (up to the isolation valve) (DF 2.3)
- HAW cementation transfer lines (DF 2.4)
- HAW transfer lines (DF 2.5)
- HAW cementation enclosure (DF 3.1)
- HAW sample glovebox (DF 3.2)
- laboratory glovebox (DF 3.3)

5.7 INTERFACE WITH TECHNICAL SAFETY REQUIREMENTS FROM OTHER FACILITIES

The WSB safety basis is expected to be dependent on TSRs from MFFF and PDCF. These are expected to include compliance with the WSB WAC, MFFF, and PDCF activities that have the potential to impact transfer lines to WSB, and configuration control of common SSCs (e.g., WSB operator emergency transfer cut off). Changes to the applicable SRS WAC (e.g., effluent treatment project, low-level waste, and TRU) will also need to be evaluated through the SRS Unreviewed Safety Question process prior to implementation at WSB. A more detailed development of these interfaces will be included in the WSB DSA.

The WSB safety basis will also be dependent on the ability of the SRS Site Services Division to provide fire water supply and electrical power. Backup electrical power will be supplied to key safety-related SSCs requiring electrical power to perform credited safety functions. One function of the Fire Protection Program is to ensure that a sufficient water supply is available to support the Safety Significant fire suppression systems. The system for supplying water to the WSB fire suppression system will meet the National Fire Protection Association requirements for fire protection water storage tanks, fire pumps, water mains, fire hydrants, pumper connections, fire hoses, and other system components (Ref. 20). A more detailed development of these interfaces will be included in the WSB DSA.

5.8 REFERENCES

1. Nuclear Safety Management. Title 10, Code of Federal Regulations, Part 830, Department of Energy, Washington, DC.

2. Preparation Guide for U.S. Department of Energy Nonreactor Nuclear Facility Safety Analysis Reports. DOE-STD-3009-94, Change Notice No. 3, Department of Energy, Washington, DC, March 2006.

3. Occupational Radiation Protection. Title10 Code of Federal Regulations Part 835, Department of Energy, Washington, DC.

4. Specific Administrative Controls. DOE-STD-1186-2004, Department of Energy, Washington, DC, August 2004.

5. Implementation Guide for Use in Developing Documented Safety Analyses to Meet Subpart B of 10 CFR 830. DOE G 421.1-2, Department of Energy, Washington, DC, October 2001.

6. Implementation Guide for Use in Developing Technical Safety Requirements. DOE G 423.1-1, Department of Energy, Washington, DC, October 2001.

7. Standards/Requirements Identification Document. WSRC-RP-94-1268, Washington Savannah River Company, Aiken, SC.

8. Facility Safety Document Manual. WSRC Procedure Manual 11Q, Washington Savannah River Company, Aiken, SC.

9. "Functional Classification," Procedure 2.25, Rev. 15, Conduct of Engineering and Technical Support. WSRC Procedure Manual E7, Washington Savannah River Company, Aiken, SC, June 2007.

10. Technical Safety Requirements Methodology Manual. WSRC-TR-2003-00573, Rev. 2, Washington Savannah River Company, Aiken, SC, September 2007.

11. Waste Solidification Building Consolidated Hazard Analysis. WSRC-TR-2007-00134, Revision A, Washington Savannah River Company, Aiken, SC, May 2007.

12. D. Saccone, Waste Solidification Building System Design Description for: Heating Ventilation, and Air Conditioning System (U). M-SYD-F-00055, Revision 4, Washington Savannah River Company, Aiken, SC, September 2007.

13. Klotz, W.L. Waste Solidification Building Tanks Hydrogen Times to LFL. S-CLC-F-00608, Rev. A, Washington Savannah River Company, Aiken, SC, May 2007.

14. C. R. Lux, Failure Frequency Calculation for WSB Proposed/Conceptual PVV System. S-CLC-F-00612, Rev. B, Washington Savannah River Company, Aiken, SC, September 2007.

15. HEPA Filter Program Manual, WSRC Procedure Manual 2Y, Washington Savannah River Company, Aiken, SC.

16. Project Fire Hazards Analysis for Waste Solidification Building. F-FHA-F-00033, Rev. C, Washington Savannah River Company, Aiken, SC, December 2007

17. Waste Solidification Building System Design Description for: Balance of Plant Support System (U). G-SYD-F-00023, Rev. 3, Washington Savannah River Company, Aiken, SC, December 2007.

18. Nuclear Criticality Safety Evaluation (NCSE): Waste Solidification Building. N-NCS-F-00094, Rev. 2, Washington Savannah River Company, Aiken, SC, July 2007.

19. Preliminary Hazards Survey for the Waste Solidification Building (WSB). S-EHS-F-00002, Washington Savannah River Company, Aiken, SC, January 2008.

20. D. T. Conrad to J. M. Lovekamp, Waste Solidification Building Fire Water Supply Path Forward. NNP-WSB-2007-00033, Rev. 1, Washington Savannah River Company, Aiken, SC, February 2008.

WSRC-SA-2003-00002
Rev. 0

WASTE SOLIDIFICATION BUILDING
PRELIMINARY DOCUMENTED SAFETY ANALYSIS

CHAPTER 6

PREVENTION OF INADVERTENT CRITICALITY (U)

JULY 2008

UNCLASSIFIED

DOES NOT CONTAIN UNCLASSIFIED CONTROLLED NUCLEAR INFORMATION

DC &
Reviewing
Official: David Allison
WSMS

Basis: IG-SR-03, 02/04
Date: 5/06/08

SAVANNAH RIVER SITE
Aiken, SC 29808 • www.srs.gov

PREPARED FOR THE U.S. DEPARTMENT OF ENERGY UNDER CONTRACT NO. DE-AC09SR18500

DISCLAIMER

This document was prepared by Washington Safety Management Solutions LLC (WSMS), under contract with Washington Savannah River Company (WSRC), subject to the warranty and other obligations of that contract and in furtherance of WSRC's contract with the United States Department of Energy (DOE).

Release to and Use by Third Parties. As it pertains to releases of this document to third parties, and the use of or reference to this document by such third parties in whole or in part, neither WSMS, WSRC, DOE, nor their respective officers, directors, employees, agents, consultants or personal services contractors (i) make any warranty, expressed or implied, (ii) assume any legal liability or responsibility for the accuracy, completeness, or usefulness, of any information, apparatus, product or process disclosed herein or (iii) represent that use of the same will not infringe privately owned rights. Reference herein to any specific commercial product, process, or service by trademark, name, manufacture or otherwise, does not necessarily constitute or imply endorsement, recommendation, or favoring of the same by WSMS, WSRC, DOE or their respective officers, directors, employees, agents, consultants or personal services contractors. The views and opinions of the authors expressed herein do not necessarily state or reflect those of the United States Government or any agency thereof.

CONTENTS

Page

6.0 PREVENTION OF INADVERTENT CRITICALITY 6.1-1

6.1 INTRODUCTION 6.1-1

6.1.1 Applicability 6.1-1

6.2 REFERENCES 6.2-1

ACRONYMS

WSB	Waste Solidification Building
WSRC	Washington Savannah River Company

6.0 PREVENTION OF INADVERTENT CRITICALITY

6.1 INTRODUCTION

Washington Savannah River Company (WSRC) Policy Manual 1-01, Management Policy 4.5 establishes the inadvertent criticality prevention program for the Savannah River Site (Ref. 1). Management Policy 4.5 states that the site criticality safety program shall be applicable to any process, structure, or system that requires the control of one or more parameters for Criticality Safety purposes. The site criticality safety program is described in WSRC-SCD-3, WSRC *Nuclear Criticality Safety Manual* (Ref. 2). This manual satisfies the requirements of Department of Energy Order 420.1B (Ref. 3).

WSRC-SCD-3 makes the following statement regarding applicability of the manual.

> If a criticality accident is inherently incredible based on the quantity of fissile material, form of the material, or the inherent physical or chemical nature of the process, then application of this Manual is not required. However, for facilities having more than 450 grams of Pu-239 or 700 grams of U-235, a determination of inherent incredibility shall be documented for the facility and Washington Safety Management Solutions Criticality and Radiation Transport Section concurrence obtained. Reviews of facility or process changes (e.g., Design Authority Technical Review or Unreviewed Safety Question Evaluation) shall evaluate the need for criticality safety requirements.

6.1.1 APPLICABILITY

Although the Waste Solidification Building (WSB) analyzed in this Preliminary Documented Safety Analysis, by definition is a Hazard Category 2 facility because of the associated source term, it has been determined that a criticality accident for the WSB is not credible and, thus, a criticality safety program is not applicable. The consolidated hazards analysis process (Ref. 4) has determined that a criticality accident for the WSB is not credible based on the controls implemented by the Mixed-Oxide Fuel Fabrication Facility and the Pit Disassemble and Conversion Facility for liquid waste to the WSB. The controls will be established by the facilities to ensure that the conditions established by the waste acceptance criteria are met. A Nuclear Criticality Safety Evaluation (Ref. 5) has been developed to show that a criticality accident is not credible in the WSB if the waste acceptance criteria are met. There is a graded criticality safety program imbedded within the Waste Acceptance Criteria Program. The program verifies that the waste generator meets the WAC specifications prior to authorizing transfer/receipt of any material into the WSB. The WSB Waste Acceptance Criteria Program SAC ensures the WAC criteria is met through LCO type requirements and surveillances, as stated in Section 4.5.3.

There is no formal WSB Criticality Safety Program and no SRS directive requiring one, although there is a graded WSB Safety Significant criticality safety function protected through a SAC and the TSR. As indicated in Chapter 6, SCD-3 invokes an SRS site-wide Criticality Safety Program, and as such an NCSE was developed indicating a criticality event inside the WSB was not credible, assuming fissile material transferred into it was as stated or below the values in the NCSE. DOE STD-1027 Supplemental Guidance indicates that if the fissile inventory is controlled exterior to the facility (no internal hazard needing process-specific controls necessary)a formal Criticality Safety Program may not be required, or may be graded.

6.2 REFERENCES

1. WSRC Policy Manual. WSRC-1-01, MP 4.5, "Nuclear Safety," Washington Savannah River Company, Aiken, SC.

2. WSRC Nuclear Criticality Safety Manual (U). WSRC-SCD-3, Washington Savannah River Company, Aiken, SC.

3. Facility Safety. DOE Order 420.1B, U.S. Department of Energy, Washington, DC, December 2005.

4. Consolidated Hazards Analysis for the Waste Solidification Building (WSB). WSRC-TR-2007-00134, Rev. 0, Washington Savannah River Company, Aiken, SC, February 2008.

5. Nuclear Criticality Safety Evaluation. N-NCS-F-00094, Rev. 2, Nuclear Criticality Safety Evaluation (NCSE): Waste Solidification Building, July 2007.

WSRC-SA-2003-00002
Rev. 0

WASTE SOLIDIFICATION BUILDING PRELIMINARY DOCUMENTED SAFETY ANALYSIS

CHAPTER 7

RADIATION PROTECTION

JULY 2008

SAVANNAH RIVER SITE
Aiken, SC 29808 · www.srs.gov

PREPARED FOR THE U.S. DEPARTMENT OF ENERGY UNDER CONTRACT NO. DE-AC09SR18500

DISCLAIMER

This document was prepared by Washington Safety Management Solutions LLC (WSMS), under contract with Washington Savannah River Company (WSRC), subject to the warranty and other obligations of that contract and in furtherance of WSRC's contract with the United States Department of Energy (DOE).

Release to and Use by Third Parties. As it pertains to releases of this document to third parties, and the use of or reference to this document by such third parties in whole or in part, neither WSMS, WSRC, DOE, nor their respective officers, directors, employees, agents, consultants or personal services contractors (i) make any warranty, expressed or implied, (ii) assume any legal liability or responsibility for the accuracy, completeness, or usefulness, of any information, apparatus, product or process disclosed herein or (iii) represent that use of the same will not infringe privately owned rights. Reference herein to any specific commercial product, process, or service by trademark, name, manufacture or otherwise, does not necessarily constitute or imply endorsement, recommendation, or favoring of the same by WSMS, WSRC, DOE or their respective officers, directors, employees, agents, consultants or personal services contractors. The views and opinions of the authors expressed herein do not necessarily state or reflect those of the United States Government or any agency thereof.

CONTENTS

Page

7.0 RADIATION PROTECTION 7.1-1

7.1 INTRODUCTION 7.1-1

7.1.1 Objective 7.1-1

7.1.2 Scope 7.1-1

7.2 REQUIREMENTS 7.2-1

7.3 RADIATION PROTECTION PROGRAM AND ORGANIZATION 7.3-1

7.4 AS LOW AS REASONABLY ACHEIVABLE POLICY AND PROGRAM 7.4-1

7.4.1 As Low As Reasonably Achievable Policy Considerations 7.4-1

7.4.2 Radiological Controls Associated with As Low As Reasonably Achievable 7.4-1

7.4.3 Personnel Protective Practices and Techniques 7.4-2

7.5 RADIOLOGICAL PROTECTION TRAINING 7.5-1

7.6 RADIATION EXPOSURE CONTROL 7.6-1

7.6.1 Administrative Limits 7.6-1

7.6.2 Radiological Practices 7.6-2

7.6.3 Dosimetry 7.6-3

7.6.4 Respiratory Protection 7.6-4

7.7 RADIOLOGICAL MONITORING 7.7-1

7.7.1 Radiological Monitoring Internal to Waste Solidification Building 7.7-1

7.7.1.1 Radiation Surveys 7.7-1

CONTENTS (continued)

Page

7.7.1.2 Contamination Surveys 7.7-1

7.7.1.3 Area Radiation Monitoring 7.7-2

7.7.1.4 Airborne Radioactivity Monitoring 7.7-2

7.7.1.5 Personnel Contamination Monitoring 7.7-2

7.7.2 Radiological Monitoring External to Waste Solidification Building 7.7-3

7.7.3 Records and Reports Associated with Radiological Monitoring 7.7-3

7.8 RADIOLOGICAL PROTECTION INSTRUMENTATION 7.8-1

7.8.1 Contamination Monitoring 7.8-1

7.8.2 Radiation Monitoring 7.8-1

7.8.3 Airborne Radioactivity Monitoring – Continuous Air Monitors 7.8-1

7.8.4 Airborne Radioactivity Monitoring – Portable Alpha Air Samplers and Portable Continuous Air Monitors 7.8-1

7.8.5 Portable Survey Instruments 7.8-2

7.8.6 Personnel Dosimetry 7.8-2

7.8.7 Radcon Laboratory Counting Equipment 7.8-2

7.8.8 Radiation Protection Instrumentation Calibration Process 7.8-2

7.9 RADIOLOGICAL PROTECTION RECORD KEEPING 7.9-1

7.10 OCCUPATIONAL RADIATION EXPOSURES 7.10-1

7.11 REFERENCES 7.11-1

ACRONYMS

ALARA	As Low As Reasonably Achievable
ARM	Area Radiation Monitor
CA	Contamination Area
CAM	Continuous Air Monitor
DAC	Derived Air Concentration
DOE	U.S. Department of Energy
DSA	Documented Safety Analysis
GERT	General Employee Radiological Training
HAW	High Activity Waste
LAW	Low Activity Waste
PCM	Personnel Contamination Monitor
PDSA	Preliminary Documented Safety Analysis
PPE	Personnel Protective Equipment
RCI	Radiation Control Inspector
RCO	Radiological Control Operation
rem	roentgen equivalent man
RPD	Radiological Protection Department
RPP	Radiation Protection Program
RWT	Radiological Worker Training
S/RID	Standards/Requirements Identification Document
SRS	Savannah River Site
STD	Standard
TLD	Thermoluminescent Dosimeter
WSB	Waste Solidification Building
WSRC	Washington Savannah River Company

7.0 RADIATION PROTECTION

This chapter 7 of this Preliminary Documented Safety Analysis (PDSA) for the Waste Solidification Building (WSB) presents an overview of how personnel radiation exposures are both controlled and measured. As the WSB design progresses, more facility-specific radiation protection details will be defined for the WSB. The emphasis of this chapter is on the identification of the approach for developing radiation protection policies and practices for the WSB and aspects of the Savannah River Site (SRS) Radiation Protection Program (RPP) that are applicable to the WSB.

7.1 INTRODUCTION

This chapter is written according to the specifications of U.S. Department of Energy (DOE) Standard (STD) 3009-94 (Ref. 1). The sections and subsections of this chapter are organized according to the sections and section content specified in Chapter 7 of DOE-STD-3009-94 (Ref. 1). The content of this chapter is based on the SRS *Radiological Control Manual,* Washington Savannah River Company (WSRC) Procedure Manual 5Q (Ref. 2), and this manual is referenced frequently.

7.1.1 OBJECTIVE

The purpose of this chapter is to describe radiation protection at the WSB. Sufficient detail is provided to describe how aspects of the RPP protect the public, workers, and the environment. The philosophy, objectives, and organization of radiation protection activities for the WSB result from a commitment to the requirements of the WSRC Procedure Manual 5Q (Ref. 2) and to the RPP standards and requirements documents given in the radiation protection function area of the SRS Standards/Requirements Identification Document (S/RID) (Ref. 3).

7.1.2 SCOPE

This chapter provides information on radiation protection at the WSB. This document is applicable to the entire WSB facility. The scope of this chapter includes descriptions of the following:

- The planned WSB radiological control organization
- WSB policies and programs for keeping worker radiation exposure to As Low As Reasonably Achievable (ALARA)
- Training on WSB radiation protection procedures and policies
- WSB radiation exposure control, including administrative limits, radiological protection practices, dosimetry, and respiratory protection
- The WSB radiological monitoring program
- Radiological protection instrumentation in the WSB facility

- The program for maintaining records associated with radiation protection at the WSB

WSRC Procedure Manual 5Q (Ref. 2) describes the SRS Radiological Protection Program as it applies to the entire site. This chapter of the WSB PDSA describes the interfaces between WSB radiation protection activities and the site-level RPP.

7.2 REQUIREMENTS

Codes, standards, and regulations that are applicable to the SRS RPP are identified in Functional Area 11 of the SRS S/RID (Ref. 3). Programmatic compliance assessments will be performed against the S/RID and documented as specified in the SRS *Compliance Assurance Manual*, WSRC Procedure Manual 8B (Ref. 4). Programmatic compliance assessment records will be managed by the SRS Standards Management and Compliance Section.

7.3 RADIATION PROTECTION PROGRAM AND ORGANIZATION

The RPP and its organization, including staffing levels and qualifications, positions of authority and responsibilities, and interfaces with other safety organizations and facilities, are provided in WSRC Procedure Manual 5Q (Ref. 2). This section is a description of how the SRS RPP will be implemented in the WSB. More facility-specific details of the radiation protection in the WSB (including staffing levels) will be included in the WSB Documented Safety Analysis (DSA).

The SRS policy on radiation protection is given in Management Policy 4.4 of the WSRC *Management Policies Manual*, WSRC Manual 1-01 (Ref. 5). This policy states as follows:

> The WSRC shall provide for the radiological protection of WSRC employees, other site contractor and subcontractor personnel, visitors, and members of the general public from radiation exposure originating from operations of the Savannah River Site. Radiation exposure of the work force and public shall be controlled such that radiation exposures are well below regulatory limits, that there is no radiation exposure without commensurate benefit, and that it is maintained as low as reasonably achievable (ALARA) at all times.

Radiation protection in the WSB is being developed and implemented according to WSRC Procedure Manual 5Q (Ref. 2). Radiation protection at the WSB will follow the organization and program objectives described in Chapter 1 of WSRC Procedure Manual 5Q (Ref. 2). Chapter 3 of the WSRC Procedure Manual 5Q will be implemented to control work of radiological concern (Ref. 2). DOE-STD-1107-94 (Ref. 6) is a description of the required experience and qualifications of key radiological control personnel at DOE facilities. At SRS, these requirements are implemented through articles in Chapter 6 of WSRC Procedure Manual 5Q (Ref. 2). Other WSRC Procedure Manual 5Q (Ref. 2) articles will be implemented at WSB, as applicable.

In addition to the WSRC Procedure Manual 5Q (Ref. 2), radiation protection will be implemented in the WSB according to "lower tiered" WSRC procedure manuals. These include the following:

- *Radiation and Contamination Control*. WSRC Procedure Manual 5Q1.1 (Ref. 7)
- *Radiation Monitoring*. WSRC Procedure Manual 5Q1.2 (Ref. 8)
- *Radiation Survey Instruments.* WSRC Procedure Manual 5Q1.3 (Ref. 9)
- *Radiation and Air Monitoring Systems.* WSRC Procedure Manual 5Q1.7 (Ref. 10)
- *Water Monitoring.* WSRC Procedure Manual 5Q1.4, (Ref. 11)
- *Air-Effluent Monitoring.* WSRC Procedure Manual 5Q1.5, (Ref. 12)

The responsibility for radiological protection is assigned to the Management and Operations Organization at SRS. Within the Management and Operations Organization, radiological protection is one of the programs implemented by Environment Safety and Health (formerly part of Environment, Safety, Health, and Quality Assurance). Within Environment Safety and Health, radiological protection functions are overseen by the Radiological Protection Department (RPD) (formerly Radiological Protection Services). The WSB DSA will provide a more detailed description of the positions of authority and responsibilities related to radiation protection.

7.4 AS LOW AS REASONABLY ACHEIVABLE POLICY AND PROGRAM

The foundation of the SRS ALARA program is given in the WSRC Procedure Manual, WSRC-SCD-6 (Ref. 13). The SRS ALARA Manual serves as a guidance document for the development of facility-specific ALARA programs at SRS. The SRS policy on radiation protection and the charter for the SRS ALARA Committee is given in Management Policy 4.4 of the WSRC Manual 1-01 (Ref. 5). In addition, the ALARA concept is applied globally to procedures in the WSRC Procedure Manual 5Q (Ref. 2). This section is a summary of the key SRS ALARA program attributes as they apply to the WSB.

7.4.1 AS LOW AS REASONABLY ACHIEVABLE POLICY CONSIDERATIONS

The requirement to implement the ALARA principle in the design of new radiological facilities is found in Title 10, Code of Federal Regulations, Part 835 (Ref. 14), Subpart K. The DOE has provided detailed guidance on the implementation of these requirements in Chapter 4 of DOE Guide 441.1-1B, *Radiation Protection Program Guide* (Ref. 15). As specified in the SRS ALARA Manual, WSRC-SCD-6 (Ref. 13), elements of the SRS ALARA program that will be applicable to WSB will include the following:

- Policy and management commitment
- ALARA training
- Implementation of ALARA in design activities
- Plans and procedures
- Internal assessments and audits
- Program audits and design reviews
- Radiological work planning
- Records

ALARA policy considerations will be implemented according to procedures in the WSRC Procedure Manual 5Q (Ref. 2).

7.4.2 RADIOLOGICAL CONTROLS ASSOCIATED WITH AS LOW AS REASONABLY ACHIEVABLE

As specified in the WSRC Procedure Manual, WSRC-SCD-6 (Ref. 13), radiological goals will be established, at least annually, at the facility level. The goals will take into account the best operating practices, planned ALARA improvements, and production requirements. WSRC Procedure Manual 5Q (Ref. 2) details the SRS requirements for the following topics:

- Establishing radiation exposure goals
- Documenting goal performance

- Reviewing goals

Prior to start-up, a plan will be developed for documenting WSB radiation exposures in a manner that will be used to quantify the success of the ALARA program. WSB management will review ALARA goals and trends and, if necessary, will reschedule or reconfigure work, or revise the ALARA goals to ensure that the requirements of the ALARA program are being implemented successfully.

The WSB facility design description provides ALARA guidelines for the project design (Ref. 16). The internal and external dose assessment reports for the WSB are in draft at the time of this PDSA.

Occupational radiation protection specifies the use of optimization methods during the design to assure occupational exposure is maintained ALARA. An ALARA dose reduction guideline of $4,000 per person-roentgen equivalent, man (rem) is utilized as directed by a NNSA-HQ letter (Ref. 17).

7.4.3 PERSONNEL PROTECTIVE PRACTICES AND TECHNIQUES

Personnel protective practices and techniques are described in WSRC Procedure Manual 5Q (Ref. 2). In addition to the radiological protection training described in Section 7.5 of this chapter and the equipment and practices that are described in Sections 7.7 and 7.8 of this chapter, the ALARA program will include the following personnel protective practices and techniques:

- Identification and implementation of effective techniques for performing tasks
- Pre-job reviews that implement and review applicable ALARA considerations
- Task level evaluation of successes and shortcomings of similar jobs
- Regular management reviews of goals and trends

7.5 RADIOLOGICAL PROTECTION TRAINING

Requirements for radiological protection training at SRS are given in Chapter 6 of the WSRC Procedure Manual 5Q (Ref. 2). Radiological protection training is implemented through a graded approach depending on an individual's tasks and responsibilities, and the areas to be accessed. Included in the training for WSB personnel will be training that will address hazards and controls specific to the WSB Facility. In the WSB facility, levels of radiological protection training will include the following:

- Radiological safety orientation (for members of the public requiring escorted access)
- General Employee Radiological Training (GERT)
- Radiological Worker Training (RWT) (RWT-I and RWT-II)
- Radiation Control Inspector (RCI) Training

Members of the public will not be granted unescorted access to the WSB facility. If members of the public require escorted access to the WSB facility controlled areas (e.g., tour groups and visiting dignitaries), they will receive a SRS radiological safety orientation. This orientation will be completed before entering the controlled area and will include information on the hazards that may be encountered in the areas to be accessed, responsibilities for radiation safety, radiation postings, emergency response, and as applicable, issuing and wearing of dosimetry.

Prior to unescorted access to a controlled area at WSB, employees will be required to have completed GERT within the prior two years. The requirements of this training are given in Chapter 6 of the WSRC Procedure Manual 5Q (Ref. 2). This training will include information on radiological fundamentals, risks associated with radioactive material, and the rights and responsibilities associated with radiological work.

In addition to GERT, personnel will be required to complete RWT within two years prior to unescorted access to a radiological area (including access to a radiological buffer area). This training will be implemented in a graded approach based on tasks and responsibilities, and the areas to be accessed. The two levels of RWT (RWT-I and RWT-II) are described in Chapter 6 of the WSRC Procedure Manual 5Q (Ref. 2).

The SRS RCI training requirements are given in Chapter 6 of the WSRC Procedure Manual 5Q (Ref. 2) and in the SRS Safety and Health Administrative Procedures Manual, WSRC Procedure Manual Q1-1 (Ref. 18). The WSB RCI training will include an inspector qualification followed by a two-year cycle of continuing training that will be needed for re-qualification. This training is also applicable to subcontracted RCIs. The SRS Radiological Control Manual includes requirements for RCI managers and first-line supervisors.

The WSRC Procedure Manual 5Q (Ref. 2) and the WSRC Procedure Manual Q1-1 (Ref. 18) include descriptions of other radiological training that will be applicable to the WSB facility (e.g., additional requirements for training of management, technical support personnel, and emergency response personnel).

7.6 RADIATION EXPOSURE CONTROL

External and internal radiation exposure control includes limiting the following exposures:

- Monthly, yearly, and lifetime whole-body exposures
- Exposure to the lens of the eye
- Organ exposures
- Skin and extremity exposures
- Exposures to the unborn
- Exposures during emergencies

At WSB, radiation exposure will be controlled by engineered and administrative attributes. Features that are being implemented in the WSB facility design to control external radiation exposure include the shielding of radiation sources, process automation, and the segregation of sources from normally occupied areas. Engineered controls (ventilation systems, confinement boundaries, and secondary confinement features) are also being included in the WSB design to control internal radiation exposure. These features are described in Chapters 2 and 4 of this PDSA.

7.6.1 ADMINISTRATIVE LIMITS

As described in the WSRC Procedure Manual 5Q (Ref. 2) and the WSRC Procedure Manual 5Q1.1 (Ref. 7), the WSB management will establish administrative dose limits for the operation of the facility. The WSB facility design has been developed to support implementation of administrative dose limits that will comply with the SRS limits.

In addition to the implementation of the ALARA principle, the WSB design team established design goals for the WSB facility. The WSB is being designed to limit individual worker whole body dose (internal and external) to less than 0.5 rem per year. The design limit for the annual dose to the lens of the eye is 3 rem, the design limit for the annual extremity dose is 10 rem, and the design limit for the annual dose to an organ (other than the eye) or tissue is also 10 rem.

The ALARA principle is being applied in the WSB design. WSRC Procedure Manual WSRC-SCD-6 (Ref. 13) describes criteria for implementing the ALARA principle in the design of SRS facilities. Measures are being taken to maintain radiation exposure ALARA through physical design features and administrative controls. During design, focus is on the physical design features (e.g., confinement, ventilation, remote handling, and shielding).

WSRC Procedure Manual 5Q (Ref. 2) and WSRC Procedure Manual 5Q1.1 (Ref. 7) provide additional guidelines on the following administrative limit topics:

- Site-wide administrative control levels (including lifetime control levels)
- Occupational and member of the public dose limits

- Embryo and fetus dose limits
- Special control levels
- Planned special exposures
- Emergency and accidental exposures

7.6.2 RADIOLOGICAL PRACTICES

The WSB will follow SRS radiological practices described in the WSRC Procedure Manual 5Q (Ref. 2), WSRC Procedure Manual 5Q1.1 (Ref. 7), and the WSRC Procedure Manual 5Q1.2 (Ref. 8). These practices will include the application of engineered and administrative features that will reduce radiation doses associated within the WSB operation.

Permanent shielding has been included in the WSB facility design. Preliminary calculations have been performed to determine the potential exposures of workers to radiation associated with pipes, tanks, sample vials, and the cement waste forms produced in both the High Activity Waste (HAW) and Low Activity Waste (LAW) processes. The facility design will utilize these results in shielding considerations for the WSB. The final dose assessment for the WSB will detail the shielding requirements and the potential effective radiation exposures to facility workers.

When appropriate, automated and remote-handling techniques are being implemented into the WSB Facility design. Preliminary calculations of worker doses from pipes, tanks, spills, vials, and cement waste forms have been performed. Based on preliminary dose calculations, the WSB design team is implementing remote capabilities for handling highly radioactive materials where applicable. The final dose assessment for the WSB will detail automated and remote-handling WSB features necessary to maintain doses ALARA.

Internal doses will be controlled in the WSB through confinement and ventilation. The confinement systems include gloveboxes, hoods, confinement vessels, sample transport secondary confinement, and process equipment. Dispersible radioactive material will be handled in gloveboxes or hoods. Procedures and equipment are specified to prevent contaminated sharp objects from puncturing hands including needle shroud, leather gloves, tools for changing needles, etc. The WSB heating, ventilation, and air conditioning system will also provide control of airborne radioactivity. The flow of air in the WSB facility will be from less contaminated areas to more contaminated areas. The heating, ventilation, and air conditioning system exhaust will be filtered to capture radioactive particulates prior to the release of air to the environment.

The WSB will implement administrative and programmatic radiological practices discussed in the WSRC Procedure Manual 5Q (Ref. 2), the WSRC Procedure Manual 5Q1.1 (Ref. 7), and the WSRC Procedure Manual 5Q1.2 (Ref. 8). These practices include the following:

- Use of radiation work permits
- Control of radiological areas (including posting requirements and access control)
- Use of Personnel Protective Equipment (PPE) (including use of special PPE)
- Provisions for controlling stay times in areas with potentially elevated dose rates

- Contamination control (including monitoring of personnel and use of step-off pads)
- Work reviews (including review of work in progress, post-job reviews, and critiques)
- Authority to stop radiological work

7.6.3 DOSIMETRY

The WSB will follow the SRS dosimetry program. This program is described in the WSRC Procedure Manual 5Q (Ref. 2), the WSRC Procedure Manual 5Q1.2 (Ref. 8), the *SRS External Dosimetry Technical Bases Manual*, WSRC Manual WSRC-IM-92-101 (Ref. 19), and the *SRS Internal Dosimetry Technical Basis Manual*, WSRC Manual WSRC-IM-90-139 (Ref. 20). The SRS dosimetry program includes the following:

- External dosimetry:
  - Personnel Thermoluminescent Dosimeter (TLD) badges
  - Personnel neutron badges (if determined to be necessary at WSB)
  - Special dosimetry for extremities
  - Electronic personnel dosimeters or self-reading pocket dosimeters
- Internal dosimetry:
  - Sampling and analysis of biological samples (urine and feces)
  - Whole-body counting
  - Chest counting
  - Smears and swipes
  - Personal and area air samplers

An evaluation will be performed to determine the types of dosimetry that will be appropriate for WSB personnel. Chapter 5 of the WSRC Procedure Manual 5Q (Ref. 2) and the WSRC Procedure Manual 5Q1.2 (Ref. 8) give the basis for this evaluation and for identifying the personnel to be included in each dosimetry program. Nuclear accident dosimetry is not expected to be necessary in the WSB. The WSB dosimetry evaluation will include an evaluation of nuclear accident dosimetry.

WSRC Procedure Manual 5Q1.2 (Ref. 8) specifies the frequency at which each dosimetry type is collected at SRS. The WSB dosimetry will be collected and analyzed according to these cycles. Most dosimetry will be collected on monthly, quarterly, or yearly cycles (e.g., TLDs, whole-body counting, and chest counting), upon completion of the task for which it is issued (e.g., electronic personnel dosimetry) or upon termination of work at SRS (e.g., biological samples, whole-body counting, and chest counting).

The RPD (formerly Radiological Protection Services) will be responsible for issuing, controlling, and monitoring dosimetry in the WSB facility. The RPD will also be responsible for the

documentation of dosimetry results. These activities will be performed according to specifications given in the WSRC Procedure Manual 5Q1.2 (Ref. 8).

7.6.4 RESPIRATORY PROTECTION

Respiratory protection will be implemented in the WSB according to the SRS respiratory protection program described in the WSRC Procedure Manual 5Q (Ref. 2), the WSRC Procedure Manual 5Q1.1 (Ref. 7) and the WSRC Procedure Manual 5Q1.2 (Ref. 8). Chapter 8, Subsection 8.6.4, of this PDSA is a discussion of respiratory protection required when only non-radioactive respiratory hazards are of concern.

The WSB is designed such that the need for respiratory protection will only be necessary during some off-normal and some maintenance activities. The capability to use respiratory protection for off-normal or maintenance conditions has been provided in the WSB design. The WSB design includes breathing air manifolds to be placed at strategic locations throughout the facility to support the use of supplied air as it may be required.

For WSB activities, respiratory protection requirements will be determined by job hazard analyses and will be specified in radiation work permits, as appropriate. Areas in which respiratory protection are anticipated to be necessary for off-normal or maintenance conditions include some locations of the following: HAW and LAW cementation areas, HAW sample glovebox area (e.g., if glovebox confinement is compromised), changing out of HEPA filters, and the HAW process room and LAW area.

The type of respiratory protection will be identified according to the SRS respiratory protection program which is given in the WSRC Procedure Manual 5Q (Ref. 2), the WSRC Procedure Manual 5Q1.1 (Ref. 7) and the WSRC Procedure Manual 5Q1.2 (Ref. 8). Training, fitness, and medical testing requirements are also included in the SRS Radiological Control Manual.

Respiratory protection will be maintained, issued, and controlled according to the SRS *Industrial Hygiene Manual*, WSRC Procedure Manual 4Q (Ref. 21). The WSB design contains space and support equipment for the storage, issuance, and control of respiratory protective equipment in the vicinity of the HAW process room and LAW area.

7.7 RADIOLOGICAL MONITORING

The WSB will implement the SRS radioactive material sampling and monitoring program. The SRS program contains features that are internal to the facility (e.g., personnel monitoring and area survey collection and evaluation), features that are external to the facility (e.g., environmental monitoring and meteorological data collection and evaluation) and maintenance of the resulting records and reports. These features are described in the WSRC Procedure Manual 5Q (Ref. 2) and "lower tiered" procedure manuals (Ref. 8, 10).

7.7.1 RADIOLOGICAL MONITORING INTERNAL TO WASTE SOLIDIFICATION BUILDING

Radiological monitoring will be performed of the facility and workers to control the spread of contamination outside of posted radiological areas. Individuals are monitored for external exposure to radiation using personnel dosimetry devices. Internal exposures are monitored using bioassay techniques. Subsection 7.6.3 is a description of the internal and external dosimetry programs that will be in use for the WSB. Subsection 7.7.1.5 is a discussion of methods that will be used in monitoring personnel for external contamination.

Workplace monitoring will be performed routinely to identify and control potential sources of personnel exposure to radiation or radioactive material. Routine surveys of radiation and contamination levels will be conducted in the WSB. The frequency of the surveys will depend on the hazard in the area. Workplace radiation monitoring consists of the use of both portable and fixed instrumentation to measure radiation levels and radioactive contamination (on surfaces and as airborne radioactivity).

7.7.1.1 Radiation Surveys

Radiation surveys will include dose rate measurements of general areas, dose rate measurements of a source or surface of interest to evaluate potential whole-body exposures, and dose rate measurements on contact with potential sources of radiation where there is a potential for hands-on work. Radiation surveys will be performed using hand-held instruments. Radiation surveys will be conducted according to Chapter 5 of the WSRC Procedure Manual 5Q (Ref. 2) and the WSRC Procedure Manual 5Q1.2 (Ref. 8).

7.7.1.2 Contamination Surveys

To monitor for removable contamination levels, swipes will be taken from surfaces of equipment, components, and building structures. Swipes may be prescreened in the field using portable survey instruments, and then counted in bench-top radiation detection instruments for a more accurate analysis. Contamination surveys will be conducted according to Chapter 5 of the WSRC Procedure Manual 5Q (Ref. 2) and Procedure 133 of the WSRC Procedure Manual 5Q1.2 (Ref. 8). These surveys are generally sufficient for identifying total beta and gamma contamination levels excluding tritium.

Swipes for alpha contamination will be counted dry in a gas flow proportional counter. Contamination monitoring in the workplace will include direct monitoring of surfaces for fixed plus removable contamination using portable survey instruments. Material and equipment in radiological buffer areas, Contamination Areas (CAs), high CAs, or airborne radioactivity areas will be surveyed for the presence of fixed and removable contamination prior to release from these areas.

7.7.1.3 Area Radiation Monitoring

Area Radiation Monitors (ARMs) will be installed in frequently occupied locations that may have the potential for an unexpected increase in dose rates and in locations where there is a need for local indication of dose rate prior to entrance of personnel into remote locations. ARMs are installed in locations where radiation levels may change sufficiently to require worker action to minimize their dose. ARMs will be implemented according to Chapter 5 of the WSRC Procedure Manual 5Q (Ref. 2), the WSRC Procedure Manual 5Q1.2 (Ref. 8), and the WSRC Procedure Manual 5Q1.7 (Ref. 10).

7.7.1.4 Airborne Radioactivity Monitoring

Monitoring of airborne radioactivity will be performed where an individual is likely to receive an exposure of 40 or more Derived Air Concentration (DAC) hours in a year, or as necessary to characterize the airborne radioactivity hazard where respiratory protective devices for protection against airborne radionuclides have been prescribed. Airborne radiation monitors will be implemented according to Chapter 5 of the WSRC Procedure Manual 5Q (Ref. 2), the WSRC Procedure Manual 5Q1.2 (Ref. 8), the WSRC Procedure Manual 5Q1.7 (Ref. 10) and the *SRS Workplace Air Monitoring Technical Basis Manual* (Ref. 22).

Real-time air monitoring will be performed using Continuous Air Monitors (CAMs) to detect and provide warning of airborne radioactivity concentrations that warrant immediate action to terminate the inhalation of airborne radioactive material. Airborne radioactivity monitoring will be accomplished using both installed and portable air samplers and CAMs. CAMs will be installed in areas of higher hazard to alert workers of airborne radioactivity releases so that they may take action. Portable CAMs will be available to monitor locations where no installed equipment is present.

7.7.1.5 Personnel Contamination Monitoring

Monitoring for the presence of contamination on individual workers will be performed using fixed Personnel Contamination Monitors (PCMs) at heavily trafficked areas, such as the exit point from a radiological buffer area or from a CA. A mechanism will be provided to dispatch radiological support personnel to the radiological area and radiological buffer area exit PCMs to address potential personnel contamination issues. Monitoring will also be performed periodically during and immediately following work in CAs. Personnel contamination monitoring will be implemented according to Chapter 5 of the WSRC Procedure Manual 5Q (Ref. 2).

Hand and foot monitors are fixed monitors, which will be located at the exits points from areas with the potential for contamination. They are intended to check hands and feet before a worker exits. Alternately, portable survey instruments may be used for this function before a worker exits the area. In addition, portable survey equipment will be mounted directly onto gloveboxes for monitoring the hands after removal from the glovebox gloves. Section 7.6.3 of this chapter describes the monitoring of individual radiation doses.

7.7.2 RADIOLOGICAL MONITORING EXTERNAL TO WASTE SOLIDIFICATION BUILDING

Effluent monitoring will be implemented to verify that airborne releases to the environment from WSB operations are less than the dose limit of 10 millirem per year and that they are ALARA. Effluent monitoring will be conducted according to the SRS *Environmental Compliance Manual*, WSRC Procedure Manual 3Q (Ref. 23). Process area stack discharge points that release or have the potential to release radioactive materials will be continuously monitored by applicable on-line monitoring or by analysis of samples that are continuously collected. For both routine and non-routine operations, the WSB will monitor radionuclides using a stack sampler.

A meteorological monitoring program has been established at SRS to collect meteorological data. As part of this program, eight monitoring towers have been located at the major onsite operations areas. One of these towers is located in the vicinity of the WSB. Instrumentation on these towers collect data on wind speed, wind direction, temperature, and dew point. The SRS meteorological monitoring program is described in Reference 24.

7.7.3 RECORDS AND REPORTS ASSOCIATED WITH RADIOLOGICAL MONITORING

Records and reports generated as part of the WSB radioactive material sampling and monitoring program will be maintained according to procedures of the WSRC Procedure Manual Q1-1 (Ref. 18). These procedures include requirements for storage, assessability, and disposition of these records and reports.

7.8 RADIOLOGICAL PROTECTION INSTRUMENTATION

The WSB will implement the SRS program for the selection of radiation equipment and instrumentation, calibration control, and quality assurance for calibration and maintenance, as described in the WSRC Procedure Manual 5Q (Ref. 2), the *SRS Health Physics Instrument Calibration Facility Procedures Manual*, WSRC Procedure Manual Q3 (Ref. 25), the *SRS Radiological Monitoring Equipment Technical Basis Manual* (Ref. 26), and the *SRS Workplace Air Monitoring Technical Basis Manual* (Ref. 22). Instrument sensitivity and range will be established according to these manuals based on control limits and contamination and radiation levels in the areas of interest.

7.8.1 CONTAMINATION MONITORING

Contamination friskers/monitors will be located where needed on the gloveboxes. PCMs will be located where needed in the WSB. PCMs will be located at the exit points from radiological buffer areas or CAs, as needed. Radiological monitoring equipment will be located in the cementation area to measure radiation and contamination levels on the surface of the waste containers before being transported onto the clean area storage pad.

7.8.2 RADIATION MONITORING

ARMs will be implemented as described in Subsection 7.7.1.3 of this chapter.

7.8.3 AIRBORNE RADIOACTIVITY MONITORING – CONTINUOUS AIR MONITORS

CAMs will comply with American National Standards Institute N13.1 (Ref. 27) and will be capable of measuring 1 DAC averaged over 8 hours under laboratory conditions. CAMs will be required in the CAs in the WSB. CAMs will be located in areas that have the potential for an airborne release of radionuclides. At a minimum, CAMs will be placed in the mezzanine area outside the glovebox, in the hot maintenance area, in the LAW area, and HAW process room, and in both cement mixer rooms. CAMs will also be placed strategically throughout the facility in areas where maintenance may be required, such as the high-efficiency particulate air filter rooms and will be installed in most of the modules within the laboratory.

7.8.4 AIRBORNE RADIOACTIVITY MONITORING – PORTABLE ALPHA AIR SAMPLERS AND PORTABLE CONTINUOUS AIR MONITORS

Portable alpha air samplers or portable alpha CAMs will be required to cover jobs in areas where installed air monitoring instrumentation is not available. The portable CAM in use at SRS is the Canberra Alpha Sentry model AS1700R detector head and model AS1000 controller. Specifications of Reference 23 will be used to develop a technical basis for determining the placement of these air samplers and the CAMs.

7.8.5 PORTABLE SURVEY INSTRUMENTS

Portable survey instruments will be stored in cabinets in the Radiological Control Operations (RCOs) laboratory and RCO storage. Portable survey instruments will include dose rate instruments and contamination survey instruments. Sufficient instrumentation will be available for the RCIs to perform the activities specified in Chapter 5 of the WSRC Procedure Manual 5Q (Ref. 2).

7.8.6 PERSONNEL DOSIMETRY

Personnel dosimetry will include use of TLDs, thermoluminescent neutron dosimeters, electronic personnel dosimeters, and direct reading pocket dosimeters. Personnel will be required to wear the applicable dosimeter(s), as posted or as specified by RCO instructions.

7.8.7 RADCON LABORATORY COUNTING EQUIPMENT

Laboratory instruments located in the RCO counting rooms will be used for the measurement of radioactive material in samples. Samples will include contamination survey swipes and air sample filter papers. WSB laboratory instrumentation will include counters for beta-gamma and alpha emitting samples. In addition, analytical services will be provided for isotopic identification of samples using a gamma or alpha pulse height analysis system.

7.8.8 RADIATION PROTECTION INSTRUMENTATION CALIBRATION PROCESS

Radiation protection instruments calibration will be implemented at WSB according to *Health Physics Instrument Calibration Facility Procedures Manual*, WSRC Procedure Manual Q3 (Ref. 25). If an instrument must be used under conditions that are different from those for which the instrument is designed, special calibration requirements will be implemented as specified in the WSRC Procedure Manual 5Q (Ref. 2).

7.9 RADIOLOGICAL PROTECTION RECORD KEEPING

Records and reports associated with the WSB radiation protection activities will be prepared, reviewed, distributed, used, and retained according the WSRC Procedure Manual 5Q (Ref. 2) and the WSRC Procedure Manual Q1-1 (Ref. 18). These records will be stored and dispositioned according to the SRS *Quality Assurance Manual*, WSRC Procedure Manual 1Q (Ref. 28) and the *WSRC Management Requirements and Procedures Manual*, WSRC Procedure Manual 1B (Ref. 29). In addition, procedure preparation, review, distribution, use, revision, retention, and disposition will be implemented at WSB according to References 28 and 29.

7.10 OCCUPATIONAL RADIATION EXPOSURES

Upon completion of the WSB design, the final facility dose assessment will be issued. This will include a series of comprehensive dose assessments. Worker occupancy and the annual worker extremity and whole body doses will be calculated based on the yearly throughput, time and motion data, and the dose rates for each process step. Normal operations radiation zone maps will also be included in the final facility dose assessment report.

7.11 REFERENCES

1. DOE Standard Preparation Guide for U.S. Department of Energy Nonreactor Nuclear Facility Documented Safety Analyses. DOE Standard DOE STD-3009-94, Change Notice No. 3, U.S. Department of Energy, Washington, DC, March 2006.

2. Radiological Control Manual. WSRC Procedure Manual 5Q, Washington Savannah River Company, Aiken, SC.

3. "Radiation Protection," Standards/Requirements Identification Document. Functional Area 11.0, WSRC-RP-94-1268-011, Washington Savannah River Company, Aiken, SC.

4. Compliance Assurance Manual. WSRC Procedure Manual 8B, Washington Savannah River Company, Aiken, SC.

5. Management Policies Manual. WSRC Procedure Manual 1-01, Washington Savannah River Company, Aiken, SC.

6. Knowledge, Skills, and Abilities for Key Radiation Protection Positions at DOE Facilities. DOE-STD-1107-94, Change Notice No. 1, U.S. Department of Energy, Washington, DC, November 2007.

7. Radiation and Contamination Control. WSRC Procedure Manual 5Q1.1, Washington Savannah River Company, Aiken, SC.

8. Radiation Monitoring. WSRC Procedure Manual 5Q1.2, Washington Savannah River Company, Aiken, SC.

9. Radiation Survey Instruments. WSRC Procedure Manual 5Q1.3, Washington Savannah River Company, Aiken, SC.

10. Radiation and Air Monitoring Systems. WSRC Procedure Manual 5Q1.7, Washington Savannah River Company, Aiken, SC.

11. Water Monitoring. WSRC Procedure Manual 5Q1.4, Washington Savannah River Company, Aiken, SC.

12. Air Effluent Monitoring. WSRC Procedure Manual 5Q1.5, Washington Savannah River Company, Aiken, SC.

13. SRS ALARA Manual. WSRC Procedure Manual WSRC-SCD-6, Washington Savannah River Company, Aiken, SC.

14. Occupational Radiation Protection. Title 10, Code of Federal Regulations, Part 835, Subpart K, Design and Control, Office of the Federal Register, National Archives and Records Administration, U.S. Government Printing Office, Washington D.C.

15. Radiation Protection Programs Guide. DOE G 441.1-1B, U.S. Department of Energy, Washington, DC, March 1, 2007.

16. Facility Design Description Waste Solidification Building, G-FDD-00007, Rev. 3, Washington Savannah River Company, Aiken, SC.

17. Letter - Damian Peko to Robert Billue, Dollar per Man-Rem Value to be used for the PDCF ALARA Cost-Benefit Analysis. April 2, 2001.

18. Administrative Procedures. WSRC Procedure Manual Q1-1, Washington Savannah River Company, Aiken, SC.

19. Savannah River Site External Dosimetry Technical Basis Manual. WSRC Manual WSRC-IM-92-101, Washington Savannah River Company, Aiken, SC.

20. Savannah River Site Internal Dosimetry Technical Basis Manual. WSRC Manual WSRC-IM- 90-139, Washington Savannah River Company, Aiken, SC.

21. Industrial Hygiene Manual. WSRC Procedure Manual 4Q, Washington Savannah River Company, Aiken, SC.

22. The Savannah River Site Workplace Air Monitoring Technical Basis Manual (U). WSRC Manual WSRC-IM-2001-00025, Washington Savannah River Company, Aiken, SC.

23. Environmental Compliance Manual. WSRC Manual 3Q, Washington Savannah River Company, Aiken, SC.

24. Parker, M.J. and Addis, R.P. Meteorological Monitoring Program at the Savannah River Site. WSRC-TR-93-0106, Washington Savannah River Company, Aiken, SC, 1993.

25. Health Physics Instrument Calibration Facility Procedures. WSRC Procedure Manual Q3, Washington Savannah River Company, Aiken, SC.

26. Radiological Monitoring Equipment Technical Basis Manual. WSRC Manual WSRC-IM-2001-00001, Washington Savannah River Company, Aiken, SC.

27. Personnel Dosimetry Performance – Criteria for Testing. ANSI N13.1, American National Standards Institute N13.1, Health Physics Society.

28. Quality Assurance Manual. WSRC Procedure Manual 1Q, Washington Savannah River Company, Aiken, SC.

29. Management Requirements and Procedures. WSRC Procedure Manual 1B, Washington Savannah River Company, Aiken, SC.

WSRC-SA-2003-00002
Rev. 0

WASTE SOLIDIFICATION BUILDING PRELIMINARY DOCUMENTED SAFETY ANALYSIS

CHAPTER 8

HAZARDOUS MATERIAL PROTECTION

JULY 2008

SAVANNAH RIVER SITE
Aiken, SC 29808 · www.srs.gov

PREPARED FOR THE U.S. DEPARTMENT OF ENERGY UNDER CONTRACT NO. DE-AC09SR18500

DISCLAIMER

This document was prepared by Washington Safety Management Solutions LLC (WSMS), under contract with Washington Savannah River Company (WSRC), subject to the warranty and other obligations of that contract and in furtherance of WSRC's contract with the United States Department of Energy (DOE).

Release to and Use by Third Parties. As it pertains to releases of this document to third parties, and the use of or reference to this document by such third parties in whole or in part, neither WSMS, WSRC, DOE, nor their respective officers, directors, employees, agents, consultants or personal services contractors (i) make any warranty, expressed or implied, (ii) assume any legal liability or responsibility for the accuracy, completeness, or usefulness, of any information, apparatus, product or process disclosed herein or (iii) represent that use of the same will not infringe privately owned rights. Reference herein to any specific commercial product, process, or service by trademark, name, manufacture or otherwise, does not necessarily constitute or imply endorsement, recommendation, or favoring of the same by WSMS, WSRC, DOE or their respective officers, directors, employees, agents, consultants or personal services contractors. The views and opinions of the authors expressed herein do not necessarily state or reflect those of the United States Government or any agency thereof.

CONTENTS

Page

8.0 HAZARDOUS MATERIAL PROTECTION 8.1-1

8.1 INTRODUCTION 8.1-1

8.1.1 Objective 8.1-1

8.1.2 Scope 8.1-1

8.2 REQUIREMENTS 8.2-1

8.3 HAZARDOUS MATERIAL PROTECTION AND ORGANIZATION 8.3-1

8.3.1 Organization 8.3-1

8.3.2 Industrial Hygiene Staff Qualifications 8.3-1

8.4 "AS LOW AS PRACTICAL" PHILOSOPHY 8.4-1

8.4.1 Industrial Hygiene Program 8.4-1

8.4.1.1 Program Policy 8.4-1

8.4.1.2 Program Elements 8.4-1

8.4.1.3 Special Program Requirements 8.4-2

8.4.1.4 Program Implementation 8.4-2

8.4.1.5 Program Implementation Oversight 8.4-2

8.5 HAZARDOUS MATERIAL TRAINING 8.5-1

8.6 HAZARDOUS MATERIAL EXPOSURE CONTROL 8.6-1

8.6.1 Hazardous Material Identification Program 8.6-1

8.6.2 Special Workplace Surveys 8.6-1

8.6.3 Annual Workplace Surveys 8.6-1

8.6.4 Administrative Limits 8.6-1

CONTENTS (continued)

Page

8.6.5 Medical Department Industrial Hygiene Responsibilities 8.6-1

8.6.6 Respiratory Protection 8.6-1

8.7 HAZARDOUS MATERIAL MONITORING 8.7-1

8.7.1 Hazardous Material Monitoring..... 8.7-1

8.7.2 Air Monitoring 8.7-1

8.7.2.1 Air Monitoring in the Workplace 8.7-1

8.7.2.2 Air Monitoring Outside the Facility 8.7-1

8.7.3 Hazard Prevention and Control..... 8.7-2

8.7.3.1 Site Program..... 8.7-2

8.7.3.2 Hazard Prevention and Control Measures for Existing Operations..... 8.7-2

8.8 HAZARDOUS MATERIAL PROTECTION INSTRUMENTATION 8.8-1

8.9 HAZARDOUS MATERIAL PROTECTION RECORDKEEPING 8.9-1

8.9.1 Document Control of Plans and Procedures 8.9-1

8.10 HAZARD COMMUNICATION PROGRAM 8.10-1

8.11 OCCUPATIONAL CHEMICAL EXPOSURES..... 8.11-1

8.12 REFERENCES 8.12-1

ACRONYMS

CFR	Code of Federal Regulations
DOE	Department of Energy
ES&H	Environment, Safety, and Health
HSS	Health and Safety Section
IH	Industrial Hygiene
OSHA	Occupational Safety and Health Administration
PDSA	Preliminary Documented Safety Analysis
PPE	Personnel Protection Equipment
QA	Quality Assurance
S/RID	Standards/Requirements Identification Document
SRS	Savannah River Site
STD	Standard
WSB	Waste Solidification Building
WSRC	Washington Savannah River Company

8.0 HAZARDOUS MATERIAL PROTECTION

Chapter 8 of this Preliminary Documented Safety Analysis (PDSA) is a description of the Waste Solidification Building (WSB) hazardous material protection program. As the WSB design progresses, more facility-specific details of the WSB program will be defined. The emphasis of this chapter is on the identification of the approach for developing the WSB hazardous material protection program and aspects of the Savannah River Site (SRS) hazardous material protection program that are applicable to the WSB.

8.1 INTRODUCTION

This chapter is written according to the specifications of U.S. Department of Energy (DOE) Standard (STD) 3009-94 (Ref. 1). The sections and subsections of this chapter are organized according to the sections and section content specified in Chapter 8 of DOE-STD-3009-94 (Ref. 1). The content of this chapter is based on the SRS *Industrial Hygiene Manual*, Washington Savannah River Site (WSRC) Procedure Manual 4Q (Ref. 2), and this manual is referenced frequently.

8.1.1 OBJECTIVE

This chapter provides information on the SRS hazardous material protection program and the program requirements that maintain the protection from events involving hazardous material at the WSB.

8.1.2 SCOPE

This chapter provides a description of the hazardous material protection policy and programs at the WSB that are designed to protect SRS workers, members of the public, and the environment from hazardous material by limiting the risks associated with chemical, physical, and biological agents. The products of this chapter are as follows:

- A description of the WSB hazardous material protection policy and program
- A summary of engineering and administrative controls used by the hazardous material protection program
- Information, as appropriate, on equipment and controls supporting hazardous material protection

This chapter is not intended to be the vehicle for the review and approval of the hazardous material protection program but is intended to describe the essential features of the program as it relates to the WSB. This PDSA has been developed according to specifications of the current revisions to WSRC manuals and procedures. The WSB will implement the most recent revisions of these manuals and procedures.

8.2 REQUIREMENTS

Codes, standards, and regulations that are applicable to the SRS radiation protection program are identified in Function Area 19 of the SRS Standards/Requirements Identification Document (S/RID) (Ref. 3). Programmatic compliance assessments will be performed against the S/RID and documented as specified in the SRS *Compliance Assurance Manual*, WSRC Procedure Manual 8B (Ref. 4). Programmatic compliance assessments records will be managed by the SRS Standards Management and Compliance Section.

8.3 HAZARDOUS MATERIAL PROTECTION AND ORGANIZATION

The WSRC occupational health objective of providing a place and condition of employment that is free from or protected against recognized hazards is achieved through a professional, comprehensive Industrial Hygiene (IH) program. This is based on management commitment and employee involvement, worksite analysis, hazard identification, program review, hazard prevention and control, safety and health training, and program assessment (Ref. 5).

8.3.1 ORGANIZATION

The WSRC IH program is managed by the Health and Safety Section (HSS) of the Environment, Safety, and Health (ES&H) division. Staffing levels in support of the WSB operations will be determined and documented in the WSB Documented Safety Analysis.

Industrial hygienists will be matrixed to the WSB operations organization. The industrial hygienists' responsibilities at WSB will include occupational health assessments (e.g., walk-throughs) and management of assigned IH technicians. The industrial hygienist will also be responsible for coordinating and evaluating the results of the IH sampling programs and for assisting in day-to-day IH activities.

The facility line supervision is ultimately responsible for each employee's health and safety. Supervision must ensure the following:

- Employees are trained on the potential hazards of the job and on the proper use of control measures to perform the job safely.
- Unsafe acts or work conditions that may cause injury or damage to health are corrected.
- A high level of orderliness and housekeeping is maintained.
- Employees adhere to appropriate rules and procedures.

In the occupational health program, the IH group will provide WSB with assistance on technical matters relating to IH and program development. Occupational health programs will comply with prescribed DOE standards and with SRS Occupational Health and Safety Guidelines provided in the SRS Industrial Hygiene Manual (Ref. 2). Each employee is responsible for knowing and following the control measures applicable to each job, minimizing exposures, and for being aware of the potential hazards before a job starts.

8.3.2 INDUSTRIAL HYGIENE STAFF QUALIFICATIONS

Requirements for IH staff positions, qualifications, and training are given in the SRS *Training and Qualification Program Manual*, WSRC Procedure Manual 4B (Ref. 6). The IH staff will be trained in anticipating, recognizing, evaluating, and controlling hazardous exposures. Industrial hygienists will maintain "state of the art" cognizance and competence in IH science through continual training, professional education, and/or certification. The training (core, continued, and refresher) will be provided according to the assigned tasks and level of responsibilities. WSRC

Procedure Manual 4B (Ref. 6) defines the program obligations for any training program. Details of the HSS Training Program will be defined in the HSS training program description document, which specify criteria across the breadth of staff assignments.

General employees at SRS are provided with IH-related training so that the employees can adequately and safely perform work assignments. Management will identify individuals who will require additional training. The WSRC training department with the assistance of the Safety and Health Department will provide employees with the applicable initial and annual refresher training on lasers, hearing conservation, heat stress, respiratory protection, hazard communication, and specific protective requirements for hazardous chemicals as listed on the Material Safety Data Sheets.

8.4 "AS LOW AS PRACTICAL" PHILOSOPHY

With the exception of radiological agents, occupational health philosophy is founded on toxicological principles that allow exposures to agents. This is called a threshold concept. It is codified in Occupational Safety and Health Administration (OSHA) regulations as permissible exposure limits and further implemented through Title 10, Code of Federal Regulations (CFR), Part 851 (Ref. 7), regulations which adopt the American Conference of Governmental Industrial Hygienists threshold limit values.

8.4.1 INDUSTRIAL HYGIENE PROGRAM

8.4.1.1 Program Policy

The site IH program, which includes the hazardous material protection program, is managed by HSS and implemented through WSRC Procedure Manual 4Q (Ref. 2). WSRC Procedure Manual 4Q satisfies the program requirements in 10 CFR 851 (Ref. 7). The purpose of the IH program is to address identification, evaluation, the control of a chemical, physical, and biological hazards within the workplace.

8.4.1.2 Program Elements

WSRC Procedure Manual 4Q (Ref. 2) provides comprehensive direction for the following IH program elements described in this chapter:

- Exposure assessment program
- Hazard prevention and control
- Special program requirements
- Control of occupational exposure
- Training and documentation
- Respiratory protection
- Recordkeeping

These program elements, as well as occupational medical programs and occupational chemical exposures, are described in WSRC Procedure Manual 4Q (Ref. 2). Only the implementing steps required in the WSB are discussed here.

It should be noted that since the major portion of the wastes handled and stored at the WSB are radioactive, handling and storage activities must be performed according to the requirements of the Radiological Protection Program (see Chapter 7). For the most part, the protective procedures and equipment specified by the Radiological Protection Program also provide hazardous materials protection to the workers. The handling and storage of a few non-radioactive hazardous process materials, such as nitric acid and sodium hydroxide, will be performed under the IH and

Employee Safety programs, implemented by WSRC Procedure Manuals 4Q and 8Q, respectively (Ref. 2, 8).

8.4.1.3 Special Program Requirements

WSRC implements DOE/OSHA special control programs to maintain occupational exposures As Low As Practical (described in the first paragraph of Section 8.4). Hazardous material exposure control is addressed in Section 8.6 of this chapter.

The IH program also establishes the operating requirements for laboratory and workbench hoods and local exhaust systems used in controlling the emission of non-radiological particulates, gases, vapors, mists, and fumes. The requirements address the following areas (WSRC Procedure Manual 4Q [Ref. 2]):

- Design of laboratory hoods and local exhaust systems
- Design control velocities for laboratory hoods and local exhaust systems
- Laboratory hood or local exhaust system variance request

These programs are addressed within the IH program. Where feasible, engineering controls are the primary method used to minimize worker exposure and to prevent releases into the work environment (WSRC Procedure Manual 4Q [Ref. 2]).

8.4.1.4 Program Implementation

The IH program will be implemented through several systems. Design considerations in WSRC Procedure Manual E7 (Ref. 9) will drive the considerations of the hierarchy of controls as design evolution occurs. An exposure assessment plan will be developed by the operations organization in determining the IH programs, responsibilities, lines of authority, available resources, and priorities for the conduct of IH at the WSB.

8.4.1.5 Program Implementation Oversight

The IH program specifies surveillance, control, cognizance, and oversight requirements for WSRC employees and organizations assigned to, or involved in, program implementation oversight positions or activities. Facility managers will be responsible for implementing and complying with all elements of the IH program deemed applicable by WSRC management (WSRC Procedure Manual 4Q, Ref. 2).

The WSB self-assessment program is described in Chapter 17 of this PDSA.

Internal and external Quality Assurance (QA) audits will be performed in accordance with the requirements in the *Quality Assurance Manual*, WSRC Procedure Manual 1Q (Ref. 10). The WSB QA program is addressed in Chapter 14 of this PDSA.

8.5 HAZARDOUS MATERIAL TRAINING

The WSRC IH training criteria, which includes hazardous material protection training, specifies IH training requirements at SRS. This is defined in Procedure 1001 of WSRC Procedure Manual 4Q (Ref. 2). This procedure describes programs for training as follows:

- Workers on hazardous material safety
- Workers involved in activities involving hazardous material protection
- IH technicians (Health and Safety Officers, First Responders, etc.)

8.6 HAZARDOUS MATERIAL EXPOSURE CONTROL

8.6.1 HAZARDOUS MATERIAL IDENTIFICATION PROGRAM

The hazardous material identification program, referred to as the hazard assessment Program, is administered as a site-level program and is described in WSRC Procedure Manual 4Q (Ref. 2). Chemical hazards resulting from postulated accidents, such as fires and explosions, are identified and quantified in the hazard and accident analyses in Chapter 3 of this PDSA.

8.6.2 SPECIAL WORKPLACE SURVEYS

Special workplace surveys will be performed by the area industrial hygienist (or a designee) under the conditions specified in WSRC Procedure Manual 4Q (Ref. 2).

8.6.3 ANNUAL WORKPLACE SURVEYS

The area industrial hygienist will perform an annual workplace survey to verify or update the baseline hazard assessment, which will be established prior to the facility start-up. The results are integrated into the hazard assessment and control record and are used to update the comprehensive baseline survey (WSRC Procedure Manual 4Q [Ref. 2]).

8.6.4 ADMINISTRATIVE LIMITS

Facility-specific administrative control levels and exposure limits will be established in accordance with WSRC Procedure Manual 4Q (Ref. 2).

8.6.5 MEDICAL DEPARTMENT INDUSTRIAL HYGIENE RESPONSIBILITIES

Programmatic responsibilities specified in the WSRC IH program for the Medical Department are specified in WSRC Procedure Manual 4Q (Ref. 2). The execution of medical surveillance is conducted by the Medical Department in accordance with procedures in the WSRC Procedure Manual Q3.1 (Ref. 11).

8.6.6 RESPIRATORY PROTECTION

It is WSRC policy to protect employees from exposure to atmospheric contaminants (radioactive or non-radioactive) by using facilities and equipment with safeguards incorporated into their design. When effective engineering controls are not feasible, or while they are being initiated, protection is provided through the use of approved respiratory devices.

The manager of HSS has the overall responsibility and authority for the respiratory protection program (Ref. 4). An evaluation of the program is performed and documented periodically.

Engineering controls are the preferred method to protect employees from exposure to airborne contaminants, both radioactive and non-radioactive, within the workplace. Personnel Protection Equipment (PPE) will be the method of last resort. PPE, such as respirators, will only be used during the time period necessary to install engineered controls, evaluate controls, or repair controls. It will also be applied in work situations where engineered controls are not feasible (such as, during maintenance of the engineered control) and in emergencies. Respiratory protection requirements are controlled by specific procedures. Respiratory protection is discussed in the WSRC Procedure Manual 4Q (Ref. 2).

8.7 HAZARDOUS MATERIAL MONITORING

This section describes the hazardous material monitoring and control programs conducted inside and outside the boundaries of the facility. Records associated with the hazardous material monitoring and control programs satisfy the requirements relating to records management listed in Section 8.9 of this chapter.

8.7.1 HAZARDOUS MATERIAL MONITORING

This section addresses the monitoring of hazardous material during normal and non-routine operations. A professional industrial hygienist will conduct periodic IH surveys to monitor for hazardous materials in the WSB. The frequencies for performing non-radioactive hazardous material surveys will depend upon the type of hazardous materials and previous survey results. IH data on hazardous materials will be collected primarily through two types of activities: 1) occupational health walkthroughs and 2) workplace air sampling and chemical monitoring.

Occupational health walkthroughs will be conducted to identify occupational health hazards. The industrial hygienist assigned to this activity will be responsible for coordinating follow-up sampling activities, collecting data, and evaluating the health risk to employees.

Subsection 8.7.2.1 of this chapter describes the program for air monitoring in the workplace. Subsection 8.7.2.2 describes the program for air monitoring outside the facility.

8.7.2 AIR MONITORING

This section describes the airborne hazardous material sampling and monitoring programs to be conducted inside and outside of the boundaries of the facility.

8.7.2.1 Air Monitoring in the Workplace

The WSRC IH program specifies the requirements for the workplace air sampling and data analysis. Chapter 7 of this PDSA addresses the air monitoring equipment selection, locations, instrumentation, and alarms used for radiological protection. General guidance and requirements for air monitoring are discussed in WSRC Procedure Manual 4Q (Ref. 2).

8.7.2.2 Air Monitoring Outside the Facility

Airborne hazardous material sampling and monitoring programs conducted outside of the boundaries of the facility will be the responsibility of the Environmental Services Section in support of permit compliance records (WSRC Procedure Manual 3Q [Ref. 12]).

Chapter 1 of this PDSA describes the meteorology of the WSB and general site.

8.7.3 HAZARD PREVENTION AND CONTROL

8.7.3.1 Site Program

The WSRC IH program establishes guidance for identifying and recommending effective engineering, work practices, and administrative controls to reduce employee exposure to occupational hazards (WSRC Procedure Manual 4Q [Ref. 2]). This hazard prevention and control process is associated with the hazard assessment process described in Section 8.6 of this chapter. This is a site-wide program and is discussed in WSRC Procedure Manual 4Q (Ref. 2).

8.7.3.2 Hazard Prevention and Control Measures

The area industrial hygienist will review work practices, maintenance records, and historical employee exposure records and, based on the results of these reviews, will transmit any recommendations to the responsible facility manager for minimizing or eliminating employee occupational exposures. The facility manager implements engineering or work practice controls, as recommended, for work areas or process activities that represent potential exposure to workers (WSRC Procedure Manual 4Q [Ref. 2]).

8.8 HAZARDOUS MATERIAL PROTECTION INSTRUMENTATION

Other than the instrumentation for radiological protection monitoring (referenced in Section 8.7 of this chapter and discussed in Chapter 7 of this PDSA), there will be no special installed monitoring instrumentation for specific hazardous materials at the WSB. Portable instruments for periodic hazardous material sampling will be used and maintained by the IH technicians matrixed to WSB (see Section 8.3.1.1). Specialized sampling and analytical instruments are available from other site locations if they are required.

8.9 HAZARDOUS MATERIAL PROTECTION RECORDKEEPING

The records requirements within the WSRC IH program are discussed in WSRC Procedure Manual 4Q (Ref. 2). WSB complies with the IH record control requirements as defined in the records inventory and disposition schedule.

8.9.1 DOCUMENT CONTROL OF PLANS AND PROCEDURES

WSRC Procedure Manual 4Q defines the plans and procedures that make up the IH program, including those governing operations involving hazardous materials (Ref. 2). These plans and procedures and their implementation are described in the *Industrial Hygiene Program Planning Document*, ESH-IHS-9432350776 (Ref. 13).

By a formally controlled process, IH plans and procedures (including changes) are reviewed for adequacy, approved for release by authorized personnel, and distributed to, and used at, the locations where hazardous materials are used, processed, or stored. This process includes the following activities:

- ES&H review activities
- Document control activities
- QA activities

These elements of the IH plans and procedures process are described in the following chapters of this PDSA:

- Chapter 12 presents the program for developing, maintaining, and modifying procedures.
- Chapter 14 describes the WSB QA program.
- Chapter 17 addresses the document control program implemented at WSB.

8.10 HAZARD COMMUNICATION PROGRAM

Hazard communication will be implemented at WSB according to SRS site-wide programs and procedures. The SRS hazard communication program is described in Section 8.10 of the SRS DSA Support Document (Ref. 14). The following are attributes of hazard communication at WSB and references to the associated SRS procedures:

- Material safety data sheets, Procedures 2.3 and 2.6 of the SRS *Chemical Management Manual*, WSRC Procedure Manual 13B (Ref. 15)
- Employee information and training, Procedure 2.3 of WSRC Procedure Manual 13B (Ref. 15), and Procedure 1001 of WSRC Procedure Manual 14Q(Ref. 2)
- Directions for non-routine tasks and outside contractors, Procedure 2.3 of WSRC Procedure Manual 13B (Ref. 15)
- Material labeling Procedure 2.3 of WSRC Procedure Manual 13B (Ref. 15)

Reference 2 indicates that this section should include a description of "information for multi employer worksites." Although more than one contractor may be involved in activities at WSB, the facility is not a true "multi employer worksite" in that WSRC is the single controlling employer. Because all WSB activities will be part of the integrated SRS operations utilizing the same hazard communication program, no information is presented here regarding multi employer worksites.

8.11 OCCUPATIONAL CHEMICAL EXPOSURES

The chemical hazards identified for the WSB in Chapter 3 of this PDSA include the following, in addition to chemically toxic radionuclides in the process stream:

- Nitric acid used in the process
- Sodium hydroxide used in the process
- Portland cement used in the cementation process
- Fly ash used in the cementation process
- Zirconium silicate used in the cementation process
- Laboratory chemicals – The particular types and quantities of laboratory chemicals are assumed to be negligible compared to large volumes described above. Inert gases may also be present in the laboratory.
- Acid from batteries used to power fork lifts

Additional chemicals are present in small quantities for various facility activities. A complete list of these chemicals has been evaluated in the WSB hazards survey (Ref. 16) and in Chapter 3.

The predicted exposure level of WSB workers from non-radioactive hazardous materials is expected to be negligible.

Material in the WSB does not contain beryllium above 1,000 parts per million and, therefore, will meet the requirements for exclusion from the Chronic Beryllium Disease Prevention Program of DOE 10 CFR 850 (Ref. 17).

8.12 REFERENCES

1. Preparation Guide for U.S. Department of Energy, Nonreactor Nuclear Facility Safety Analysis Reports. DOE-STD-3009-94, Change Notice 3, U.S. Department of Energy, Washington, DC, March 2006.

2. Industrial Hygiene Manual. WSRC Procedure Manual 4Q, Washington Savannah River Company, Aiken, SC.

3. Standards/Requirements Identification Document. WSRC-RP-94-1268, Washington Savannah River Company, Aiken, SC.

4. Compliance Assurance Manual. WSRC Procedure Manual 8B, Washington Savannah River Company, Aiken, SC.

5. Management Policies. WSRC Procedure Manual 1-01, Washington Savannah River Company, Aiken, SC.

6. Training and Qualification Program Manual. WSRC Procedure Manual 4B, Washington Savannah River Company, Aiken, SC.

7. "Worker Safety and Health Program," Energy. Title 10, Code of Federal Regulations, Part 851, U.S. Nuclear Regulatory Commission, Washington, DC.

8. Employee Safety Manual. WSRC Procedure Manual 8Q, Washington Savannah River Company, Aiken, SC.

9. Conduct of Engineering. WSRC Procedure Manual E7, Washington Savannah River Company, Aiken, SC.

10. Quality Assurance Manual. WSRC Procedure Manual 1Q, Washington Savannah River Company, Aiken, SC.

11. Medical Department Administrative Policies and Procedures. WSRC Procedure Manual Q3.1, Washington Savannah River Company, Aiken, SC.

12. Environmental Compliance Manual. WSRC Procedure Manual 3Q, Washington Savannah River Company, Aiken, SC.

13. Industrial Hygiene Program Planning Document. ESH-IHS-9432350776, Washington Savannah River Company, Aiken, SC.

14. DSA Support Document – Site Characteristics and Program Descriptions. WSRC-IM-2004-00008, Rev. 1, Washington Savannah River Company, Aiken, SC, January 2007.

15. Chemical Management Manual. WSRC Procedure Manual 13B, Washington Savannah River Company, Aiken, SC.

16. Preliminary Hazards Survey for the Waste Solidification Building (WSB). S-EHS-F-00002, Washington Savannah River Company, Aiken, SC, January 2008.

17. "Chronic Beryllium Disease Prevention Program," Energy. Title 10, Code of Federal Regulations, Part 850, U.S. Nuclear Regulatory Commission, Washington, DC.

WSRC-SA-2003-00002
Rev. 0

WASTE SOLIDIFICATION BUILDING PRELIMINARY DOCUMENTED SAFETY ANALYSIS

CHAPTER 9

RADIOACTIVE AND HAZARDOUS MATERIAL WASTE MANAGEMENT

JULY 2008

SAVANNAH RIVER SITE
Aiken, SC 29808 · www.srs.gov

PREPARED FOR THE U.S. DEPARTMENT OF ENERGY UNDER CONTRACT NO. DE-AC09SR18500

DISCLAIMER

This document was prepared by Washington Safety Management Solutions LLC (WSMS), under contract with Washington Savannah River Company (WSRC), subject to the warranty and other obligations of that contract and in furtherance of WSRC's contract with the United States Department of Energy (DOE).

Release to and Use by Third Parties. As it pertains to releases of this document to third parties, and the use of or reference to this document by such third parties in whole or in part, neither WSMS, WSRC, DOE, nor their respective officers, directors, employees, agents, consultants or personal services contractors (i) make any warranty, expressed or implied, (ii) assume any legal liability or responsibility for the accuracy, completeness, or usefulness, of any information, apparatus, product or process disclosed herein or (iii) represent that use of the same will not infringe privately owned rights. Reference herein to any specific commercial product, process, or service by trademark, name, manufacture or otherwise, does not necessarily constitute or imply endorsement, recommendation, or favoring of the same by WSMS, WSRC, DOE or their respective officers, directors, employees, agents, consultants or personal services contractors. The views and opinions of the authors expressed herein do not necessarily state or reflect those of the United States Government or any agency thereof.

CONTENTS

Page

9.0 RADIOACTIVE AND HAZARDOUS MATERIAL WASTE MANAGEMENT..... 9.1-1

9.1 INTRODUCTION 9.1-1

9.1.1 Objective 9.1-1

9.1.2 Scope 9.1-1

9.2 REQUIREMENTS 9.2-1

9.3 RADIOACTIVE AND HAZARDOUS WASTE MANAGEMENT PROGRAM AND ORGANIZATION 9.3-1

9.3.1 Waste Solidification Building Solid Waste Certification Program 9.3-1

9.3.2 Organizational Structure 9.3-1

9.4 RADIOACTIVE, MIXED, AND HAZARDOUS WASTE STREAMS AND SOURCES 9.4-1

9.4.1 Waste Management Process 9.4-1

9.4.1.1 Procedural Controls 9.4-1

9.4.2 Waste Source and Characteristics 9.4-3

9.4.2.1 Gaseous Waste 9.4-3

9.4.2.2 Liquid Waste (Influents) 9.4-3

9.4.2.3 Wastewater Streams (Effluents) 9.4-4

9.4.2.4 Mixed and Hazardous Waste Streams 9.4-4

9.4.2.5 Solid Waste Streams 9.4-5

9.5 REFERENCES 9.5-1

ACRONYMS

DOE	U. S. Department of Energy
LLW	Low Level Waste
MFFF	Mixed Oxide Fuel Fabrication Facility
PDCF	Pit Disassembly and Conversion Facility
RCRA	Resource Conservation and Recovery Act
S/RID	Standards/Requirements Identification Document
SRS	Savannah River Site
TRU	Transuranic
WAC	Waste Acceptance Criteria
WIPP	Waste Isolation Pilot Plant
WSB	Waste Solidification Building
WSRC	Washington Savannah River Company

9.0 RADIOACTIVE AND HAZARDOUS MATERIAL WASTE MANAGEMENT

9.1 INTRODUCTION

9.1.1 OBJECTIVE

This chapter provides information on the Savannah River Site (SRS) radioactive and hazardous material waste management program that maintains safety for the management of radioactive and hazardous waste at the Waste Solidification Building (WSB).

9.1.2 SCOPE

This chapter describes the program and organization for radioactive and hazardous waste management at the WSB. Only WSB-generated wastes are discussed in detail in this chapter. WSB-generated wastes are those wastes resulting from routine and non-routine operation and maintenance activities within the WSB. The three types of waste to be addressed that may be generated in the WSB are as follows:

- Radioactive waste
- Hazardous waste
- Mixed waste

Waste generation sources are expected to be maintenance activities, line breaks, cleaning operations, waste oil used in equipment, protective clothing used for entering radiological areas, and the content of the floor drain collection tank. In addition, the products of the WSB processes are waste forms, solid Transuranic (TRU) waste from the high activity waste process and solid low level waste (LLW) from the low activity waste process.

Because the WSB may generate radioactive and hazardous waste, certain U.S. Department of Energy (DOE) and state regulations apply to the operation of the facility. Section 9.2 of this chapter of the Preliminary Documented Safety Analysis discusses the regulatory requirements that govern the waste generated in the facility. Section 9.3 discusses the overall waste management program, philosophy, and objectives within the WSB for the implementation of the waste management program. Section 9.4 discusses the different waste sources and the techniques used to minimize the impact on workers, to mitigate the release of waste material into the environment, and to ensure compliance with DOE and state waste management requirements.

9.2 REQUIREMENTS

The Standards/Requirements Identification Document (S/RID) states the codes, standards, and regulations governing the SRS radioactive and hazardous waste management program (e.g., S/RID Functional Area 16 [Ref. 1]). Programmatic compliance assessments are performed against the S/RID and documented, as specified, in the *Compliance Assurance Manual*, Washington Savannah River Company (WSRC) Procedure Manual 8B (Ref. 2). The Standards Management/Compliance Section maintains the records of the programmatic compliance assessments.

9.3 RADIOACTIVE AND HAZARDOUS WASTE MANAGEMENT PROGRAM AND ORGANIZATION

Since the major portion of the waste streams handled and stored at WSB will be radioactive, handling and storing requirements are given in the Radiological Protection Program, implemented by the *Radiological Control Manual*, WSRC Procedure Manual 5Q (Ref. 3). The protective procedures and equipment specified by the Radiological Protection Program also provide hazardous materials protection to the workers. Handling and storage requirements for the few non-radioactive hazardous materials, such as nitric acid and sodium hydroxide, are given in the industrial hygiene and employee safety programs, implemented by References 4 and 5, respectively.

9.3.1 WASTE SOLIDIFICATION BUILDING SOLID WASTE CERTIFICATION PROGRAM

As a generator of solid LLW and low level mixed waste, the WSB management will be responsible for minimizing the generation of waste. WSB management will also be responsible for the following:

- Characterizing waste streams, as required (Ref. 6)
- Complying with requirements and criteria of the facility receiving the waste
- Establishing auditable programs, as required (Ref. 6)
- Submitting waste certification plans for review and evaluation, as required (Ref. 6)
- Submitting requests for deviations from the requirements, as applicable (Ref. 6)

The WSB waste certification plan will document the organizations responsible for certification and packaging of solid radioactive wastes for onsite storage (WSRC Procedure Manual 1S [Ref. 6]). The waste certification plan will also specify the training required; specify how the waste streams are generated, processed, and packaged; describe waste isotopic and analytical characterization; and define the WSB waste reduction program. Quality assurance requirements and assessment of waste handling activities will also be included.

9.3.2 ORGANIZATIONAL STRUCTURE

The organization that will manage the receipt, storage, and disposition of radioactive and hazardous waste at the WSB (as noted in the introduction) is described in Chapter 17.

9.4 RADIOACTIVE, MIXED, AND HAZARDOUS WASTE STREAMS AND SOURCES

The WSB will generate a variety of different types of waste products during the performance of its mission. This section addresses the different types of waste handling procedures and the radioactive, hazardous, or mixed waste streams.

9.4.1 WASTE MANAGEMENT PROCESS

As stated previously, the WSB will comply with the DOE Orders in the area of radioactive and hazardous waste management. SRS has put into place the necessary organizations, policies, and procedures to ensure that these requirements are satisfied. The strategy for achieving SRS's waste management objectives is as follows:

- Ensure that there is a method to dispose of the waste before it is generated
- Reduce waste generation
- Recycle or reuse consumed waste in processes as much as practical
- Segregate waste at the generating point in a manner that prevents cross-contamination
- Segregate the waste at the generating location for temporary storage
- Treat (e.g., compact or immobilize) hazardous and radioactive constituents
- Dispose of generated waste in monitored repositories

Radioactive and hazardous waste generated by the WSB will be managed through policy and administrative programs. The safety-related and special handling considerations of radioactive and hazardous waste handling, packaging, and staging in the WSB include the following:

- Maintaining workers' exposure as low as reasonably achievable
- Employing standard radiological and work safety practices
- Surveying waste containers and staging areas for radiation and contamination levels
- Documenting container contents

These actions will be implemented through the use of controlled procedures. This section describes the procedural controls applied to waste operations and the sources and characteristics of the waste generated in the WSB.

9.4.1.1 Procedural Controls

The management of radioactive and hazardous waste will be controlled through the use of procedures and limits designed to ensure the safety of personnel as well as proper waste disposal. The primary control for safe operation is managed through administrative controls and procedures and specified in formalized policies and programs for waste minimization, waste

segregation, and waste characterization. Detailed WSB procedures will address the following activities for solid waste:

- Segregation
- Packaging
- Handling
- Identification (material and quantity of radionuclide)
- Preparation for transportation
- Prevention of contamination spread

Records will be maintained of volume, isotopic quantity, and variety of contamination for solid and liquid waste generated by the facility. The facility will use procedures that address the following typical operations and activities:

- Inspection of hazardous or mixed waste staging or satellite areas
- Waste handling
- Purchasing, handling, and control of chemical products
- Chemical and hazardous material control
- Preparation of certified waste for shipment
- Sampling for waste characterization
- Waste oil disposal
- Process equipment use and maintenance

Also included in the waste handling procedures will be the method for properly segregating certified and non-certified waste. All non-certified waste must be physically separated from certified waste. Another essential part of the waste management program will be job preplanning. Each activity performed that may generate waste will be evaluated for the most efficient and practical way of minimizing the waste.

The SRS Waste Acceptance Criteria (WAC) listed in WSRC Procedure Manual 1S (Ref. 6) addresses specific requirements on the packaging of waste forms of the various types to be generated by the WSB. The criteria cover low level solid radioactive waste, TRU waste, mixed waste, and non-radioactive hazardous waste. The requirements include waste characteristics and external radiation dose rates. These requirements imposed upon the waste generator have the function of ensuring that the waste can be transported, handled, stored, and ultimately, disposed of properly. The WAC provided in WSRC ProcedureManual 1S (Ref. 6) defines the types and amounts of contaminants that may be contained in a waste package and the characteristics of the package itself.

Annual training will be required for all operators and maintenance personnel within the facility. The subject matter of this training will involve a discussion of the following:

- Resource Conservation and Recovery Act (RCRA) requirements and their application to the facility
- Waste minimization techniques, practices, and philosophies at the facility
- State and federal laws associated with liquid and gaseous releases

In addition, all personnel directly associated with the packaging, labeling, and moving of radioactive and mixed waste will be required to attend a waste handling course every 2 years. The training records will be documented and maintained onsite for audit purposes.

9.4.2 WASTE SOURCE AND CHARACTERISTICS

As part of the plutonium disposition mission at the SRS, the WSB will process specific Pit Disassembly and Conversion Facility (PDCF) and Mixed Oxide Fuel Fabrication Facility (MFFF) liquid waste streams into a solid waste form. The liquid streams will enter the WSB through dedicated underground transfer lines from their respective facilities.

9.4.2.1 Gaseous Waste

Vapors will be released from the head spaces of the tanks and removed by the tank ventilation systems, passed through high-efficiency particulate air filters, and released through a continuously monitored stack. Potentially measurable quantities (up to 0.0001 curies per year) of plutonium, uranium, and americium could be released.

9.4.2.2 Liquid Waste (Influents)

The following liquid waste streams from PDCF and MFFF will be received in the WSB:

- PDCF laboratory liquid stream
- MFFF high activity stream
- MFFF stripped uranium stream

The liquid streams are processed into solid waste forms acceptable for shipment and disposal as TRU waste at the Waste Isolation Pilot Plant (WIPP) and as LLW at approved disposal areas. The drummed TRU waste will be loaded into TRU packaging and transporters and shipped to WIPP.

All waste streams being transferred into, or through, the WSB for processing must meet the WSB WAC. The originating facility will prepare a waste compliance plan, which verifies that the waste stream being shipped or transferred meets the WSB WAC.

Several transfers may be covered under one plan, provided the waste stream compositions are similar.

9.4.2.3 Wastewater Streams (Effluents)

The potentially contaminated effluent stream generated by the WSB will be floor drain collection tank effluents, steam condensate, and overheads generated by the evaporation process. These effluents will be sent to the Effluent Treatment Project.

The low activity evaporator will process low activity waste from the MFFF stripped uranium stream, PDCF laboratory liquid waste, and high activity evaporator overheads. The overheads from the low activity evaporation process will be condensed and stored in the effluent hold tank. When the effluent hold tank is filled with overheads, a sample will be pulled for alpha activity. If the alpha activity is greater than the Effluent Treatment Project WAC, the overheads will be returned to the low activity head tank to be evaporated for a second time. Once the effluent hold tank sample has alpha activity less than the Effluent Treatment Project WAC, the pH of the overheads will be adjusted with sodium hydroxide and the overheads will be transferred to the Effluent Treatment Project.

When the floor drain collection tank is filled, a sample will be pulled for alpha activity. If the alpha activity is greater than the Effluent Treatment Project WAC, the contents will be sent to the process for decontamination. Once the floor drain collection tank sample has alpha activity verified to be less than the Effluent Treatment Project WAC, the contents will be transferred to the Effluent Treatment Project.

9.4.2.4 Mixed and Hazardous Waste Streams

The mission of the WSB is to immobilize a liquid high activity waste stream and two liquid low-activity waste streams into waste forms that meet the WAC for disposal. The liquid waste streams will be radioactive and hazardous. Waste forms will be handled as RCRA hazardous waste until the cement waste forms have reached a state that no longer requires handling as a RCRA hazardous waste. The low-activity waste forms waste will be shown to meet RCRA land disposal restrictions for disposal as a RCRA non-hazardous LLW. The high activity waste will be shipped to WIPP for disposal as a potentially mixed TRU waste form.

With the exception of the low activity waste and high activity waste products, only a very small quantity of mixed and hazardous wastes are expected to be generated at WSB. Lubricating oil, solvents, and solutions used for decontamination, cleaning, or degreasing during equipment maintenance or repair may become contaminated with radioactive or hazardous materials during the cleaning process or through routine maintenance, and these materials may be a source of hazardous or mixed waste.

Administrative programs will minimize the amounts of hazardous or mixed waste generated. Before the maximum permitted quantity of stored waste accumulates at a designated storage area in the WSB, it will be sent to an approved facility for recycling or disposal.

Procedures will require that the amounts of mixed and hazardous waste expected and the amount received at the approved facility are reported periodically; therefore, management actions can be taken to reduce the quantities in accordance with waste reduction and minimization programs specified in WSRC Procedure Manual 1S (Ref. 6).

The mixed and hazardous waste will be managed in accordance with the requirements of WSRC Procedure Manual 3Q (Ref. 7), and WSRC Procedure Manual 1S (Ref. 6).

9.4.2.5 Solid Waste Streams

Solid radioactive waste will be generated at the WSB by process activities carried out in support of normal treatment operations. These activities will result in the collection of radioactive contaminated solid waste, such as tools or contaminated job control waste generated during work performed by personnel in controlled areas.

The origin of WSB LLW and TRU waste is described in the following sections.

9.4.2.5.1 SOLIDIFIED WASTE

The WSB will generate 55-gallon drums of LLW and TRU waste as described in Section 9.4.2.4. While the project plans to manage these waste streams as mixed hazardous waste, the waste treatment process (neutralization and solidification) may render the waste streams non-hazardous If this is the case, the drummed waste will be packaged and disposed of in accordance with the requirements of WSRC Procedure Manual 1S (Ref. 6) for LLW and TRU waste (non-hazardous).

9.4.2.5.2 JOB CONTROL WASTE

Job control waste will be generated during work performed by personnel in controlled areas. It will consist of discarded protective clothing, gloves, shoe covers, plastic sheets, cellulose wipes, etc. It will be packaged and disposed of in accordance with the requirements of WSRC Procedure Manual 1S (Ref. 6).

9.4.2.5.3 VENTILATION FILTERS

Roughing and high efficiency particulate air filters will be extensively used in the ventilation system in the WSB. They will be packaged and disposed of in accordance with the requirements of WSRC Procedure Manual 1S (Ref. 6).

9.4.2.5.4 FAILED PROCESS EQUIPMENT

Major process vessels will have a life expectancy of approximately 30 years, based upon design criteria and SRS equipment histories. All of these will be replaceable, as will be the connecting piping and instruments. Large failed process equipment will be dispositioned by one of the

following methods: 1) decontaminated to the extent practicable and repaired; 2) size reduced and disposed of through current available options; or 3) stored as spare equipment for future evaluation. WSRC Procedure Manual 5Q and Chapter 16 discuss planning and procedural requirements for this decontamination and disposal work (Ref. 3).

9.4.2.5.5 PACKAGING

LLW and TRU waste will be characterized, packaged, and disposed of in accordance with the requirements of WSRC Procedure Manual 1S (Ref. 6).

Records of volume, isotopic content, and estimated curie content for each shipment will be maintained by the existing radioactive waste information tracking system.

9.4.2.5.6 CHARACTERISTICS, CONCENTRATION, AND VOLUME OF SOLID WASTE

All waste will be characterized, as required, by WSRC Procedure Manual 1S (Ref. 6). A waste generation and shipment forecasted will be developed, as required, by WSRC Procedure Manual 1S (Ref. 6). Any variance to the shipment forecast will be analyzed and the shipment forecast updated according to the requirements of WSRC Procedure Manual 1S (Ref. 6).

9.5 REFERENCES

1. Standards/Requirements Identification Document (S/RID). WSRC-RP-94-1268, Washington Savannah River Company, Aiken, SC.

2. Compliance Assurance Manual. WSRC Procedure Manual 8B, Washington Savannah River Company, Aiken, SC.

3. Radiological Control. WSRC Procedure Manual 5Q, Washington Savannah River Company, Aiken, SC, March 1996.

4. Industrial Hygiene Manual. WSRC Procedure Manual 4Q, Washington Savannah River Company, Aiken, SC.

5. Employee Safety Manual. WSRC Procedure Manual 8Q, Washington Savannah River Company, Aiken, SC.

6. Savannah River Site Waste Acceptance Criteria Manual. WSRC Procedure Manual 1S, Washington Savannah River Company, Aiken, SC, June 1996.

7. Environmental Compliance Manual. WSRC Procedure Manual 3Q, Washington Savannah River Company, Aiken, SC.

WSRC-SA-2003-00002
Rev. 0

WASTE SOLIDIFICATION BUILDING PRELIMINARY DOCUMENTED SAFETY ANALYSIS

CHAPTER 10

INITIAL TESTING, IN-SERVICE SURVEILLANCE AND MAINTENANCE

JULY 2008

SAVANNAH RIVER SITE
Aiken, SC 29808 · www.srs.gov

PREPARED FOR THE U.S. DEPARTMENT OF ENERGY UNDER CONTRACT NO. DE-AC09SR18500

DISCLAIMER

This document was prepared by Washington Safety Management Solutions LLC (WSMS), under contract with Washington Savannah River Company (WSRC), subject to the warranty and other obligations of that contract and in furtherance of WSRC's contract with the United States Department of Energy (DOE).

Release to and Use by Third Parties. As it pertains to releases of this document to third parties, and the use of or reference to this document by such third parties in whole or in part, neither WSMS, WSRC, DOE, nor their respective officers, directors, employees, agents, consultants or personal services contractors (i) make any warranty, expressed or implied, (ii) assume any legal liability or responsibility for the accuracy, completeness, or usefulness, of any information, apparatus, product or process disclosed herein or (iii) represent that use of the same will not infringe privately owned rights. Reference herein to any specific commercial product, process, or service by trademark, name, manufacture or otherwise, does not necessarily constitute or imply endorsement, recommendation, or favoring of the same by WSMS, WSRC, DOE or their respective officers, directors, employees, agents, consultants or personal services contractors. The views and opinions of the authors expressed herein do not necessarily state or reflect those of the United States Government or any agency thereof.

CONTENTS

Page

10.0 INITIAL TESTING, IN-SERVICE SURVEILLANCE, AND MAINTENANCE.... 10.1-1

10.1 INTRODUCTION 10.1-1

10.1.1 Objective 10.1-1

10.1.2 Scope 10.1-1

10.2 REQUIREMENTS 10.2-1

10.3 INITIAL TESTING PROGRAM 10.3-1

10.3.1 Testing of Facility Modifications 10.3-1

10.3.2 Testing of Equipment Modifications 10.3-1

10.3.3 Adequacy of Testing Activities 10.3-2

10.3.4 Startup Testing Activities 10.3-2

10.4 IN-SERVICE SURVEILLANCE PROGRAM 10.4-1

10.4.1 Provisions for Testing and Calibrations 10.4-1

10.4.2 Control and Calibration of Measuring and Test Equipment 10.4-1

10.4.3 Trending of Surveillance Test Results 10.4-1

10.4.4 Programmatic Review 10.4-2

10.4.5 Training of Surveillance Testing Personnel 10.4-2

10.5 MAINTENANCE PROGRAM 10.5-1

10.5.1 Maintenance Organization and Administration 10.5-1

10.5.2 Training And Qualification of Maintenance Personnel 10.5-2

10.5.3 Maintenance Facilities, Equipment, and Tools 10.5-2

10.5.4 Post-Maintenance Testing 10.5-2

CONTENTS (continued)

Page

10.5.5 Control and Calibration of Measuring and Test Equipment..... 10.5-3

10.5.6 Maintenance History and Trending 10.5-3

10.6 REFERENCES 10.6-1

ACRONYMS

DOE	U. S. Department of Energy
ISI	In-Service Inspection
M&TE	Measuring and Test Equipment
PDSA	Preliminary Documented Safety Analysis
SRS	Savannah River Site
SSC	Structure, System, and Component
TSR	Technical Safety Requirement
WSB	Waste Solidification Building
WSRC	Washington Savannah River Company

10.0 INITIAL TESTING, IN-SERVICE SURVEILLANCE, AND MAINTENANCE

10.1 INTRODUCTION

10.1.1 OBJECTIVE

This chapter provides information on the Savannah River Site (SRS) programs under which initial testing, in-service surveillance, and maintenance activities are performed and the program requirements that will govern these activities in the Waste Solidification Building (WSB).

10.1.2 SCOPE

This chapter provides a description of the initial testing, in-service surveillance, and maintenance programs established by Washington Savannah River Company (WSRC) and describes the interfaces between the WSB and the site- and division-level programs.

The scope of this chapter includes the following:

- Facility initial testing program
- Facility in-service surveillance program
- Planned, predictive, preventive, and corrective facility maintenance programs

In those cases where policies, programs, and practices important to safe operation are described in detail in other site documents, the information is summarized in this chapter and the documents are referenced.

10.2 REQUIREMENTS

The Standards/Requirements Identification Document states the codes, standards, and regulations governing the initial testing, in-service surveillance, maintenance policies, and program elements at SRS (Ref. 1). Programmatic compliance assessments are performed against the Standards/Requirements Identification Document and documented, as specified, in the WSRC Compliance Assurance Manual, WSRC Procedure Manual 8B (Ref. 2). The Standards Management/Compliance Section maintains records of the programmatic compliance assessments.

10.3 INITIAL TESTING PROGRAM

This section summarizes the following test programs that ensure the operability of WSB and Structures, Systems, and Components (SSCs) in the WSB:

- Pre-operational testing for initial startup
- Post-modification testing
- In-service surveillance
- Post-maintenance testing

Subsection 10.3.1 contains descriptions of the initial startup of the WSB and the WSB SSCs and the restart testing of the WSB and the WSB SSCs following a major modification. Subsection 10.3.2 covers testing following modifications to a SSC and its related return-to-service requirements. This program can also be used to perform pre-operational testing following a major modification. Sections 10.4 and 10.5 describe the in-service surveillance and post-maintenance testing, respectively.

10.3.1 TESTING OF FACILITY MODIFICATIONS

The *Assessment Manual*, WSRC Procedure Manual 12Q (Ref. 3), establishes a formalized process for the startup/restart of nuclear facilities, processes, and SSCs (called nuclear activity startups) at SRS and provides procedures for the uniform conduct of WSRC readiness self-assessments, WSRC operational readiness reviews and WSRC readiness assessments. Procedures in WSRC Procedure Manual 12Q (Ref. 3) identify the activities required to accomplish nuclear activity startups based on a graded approach.

The *Configuration Management Manual*, WSRC Procedure Manual 7E (Ref. 4), establishes the requirements, implementing procedures, and responsibilities for managing the configuration of SRS facility SSCs and process computer software.

The *Startup Manual*, WSRC Procedure Manual 5E (Ref. 5), describes the requirements for an initial startup of a facility or the restart testing program to establish uniformity and consistency in developing and implementing the test program activities. The scope of WSRC Procedure Manual 5E (Ref. 5) includes the startup/restart-testing activities of a facility from the completion of construction through the operational readiness reviews. Various phases of startup that would be applied to new or substantially modified SSCs in the WSB are described in WSRC Procedure Manual 5E (Ref. 5).

10.3.2 TESTING OF EQUIPMENT MODIFICATIONS

WSRC Procedure Manual 7E (Ref. 4) establishes responsibilities and activities for the configuration management process for controlling changes to SSCs and their associated documentation at SRS facilities. Chapter 7, Subsection 17.4.2, of this Preliminary Documented Safety Analysis (PDSA) provides additional details on configuration management.

10.3.3 ADEQUACY OF TESTING ACTIVITIES

Several elements of the initial testing, post-modification testing, in-service surveillance, and maintenance programs ensure that WSB facilities will be managed safely from the standpoint of testing facility equipment prior to the facility startup and prior to the use of the equipment following maintenance or modifications. These program elements are described in other sections of this chapter, as indicated in the following paragraphs.

As discussed in Subsection 10.3.1 of this chapter, WSRC Procedure Manual 5E (Ref. 5) defines the requirements for testing equipment prior to the startup/restart of a facility. WSRC Procedure Manual 5E (Ref. 5) provides detailed descriptions of the different programmatic areas considered, the responsibilities of organizations involved, and training and qualification requirements for personnel involved in the startup/restart process.

Section 10.3.2 of this chapter discusses modification of a system or a piece of equipment. WSRC Procedure Manual 7E (Ref. 4) describes the detailed requirements in place to control the configuration of SRS SSCs. Chapter 4 of this PDSA identifies safety-related SSCs in the WSB that require configuration management.

Surveillance testing of SSCs and testing following routine maintenance is discussed in Sections 10.4 and 10.5 of this chapter, respectively. These sections also discuss training and qualification of personnel, responsibilities of personnel, and the SRS guidance governing these testing programs.

10.3.4 STARTUP TESTING ACTIVITIES

Startup activities will be conducted in accordance with the requirements of the Quality Assurance Program described in the *Quality Assurance Manual*, WSRC Procedure Manual 1Q (Ref. 6). Details of the activities, including responsibilities, test plan, test procedures, control of testing, documentation of test results, tracking test deficiencies, and qualification of test personnel are described in WSRC Procedure Manual 5E (Ref. 5).

WSB will develop functional acceptance criteria that establish requirements for acceptance testing of WSB SSCs to ensure that the SSCs can perform the functions described in the Facility Design Description (Ref. 7) and PDSA (this document). Details of the functional acceptance criteria development are described in WSRC Procedure Manual E7, Procedure 2.26 (Ref. 8).

10.4 IN-SERVICE SURVEILLANCE PROGRAM

In-service surveillance and inspections at the WSB will be performed in accordance with WSRC Procedure Manual 1Q (Ref. 6). WSRC Procedure Manual 1Q (Ref. 6) requires periodic inspections, ranging from management walkthroughs to detailed facility inspections, to ensure that proper conditions are maintained to support safe and reliable facility operations. Implementation of Reference 6 requirements is described in this section.

10.4.1 PROVISIONS FOR TESTING AND CALIBRATIONS

Surveillance, inspection, and testing activities verify that the equipment needed for safe and reliable facility operation performs within the required limits and that the functional tests of the installed equipment and systems are conducted and documented as part of the surveillance program. Abnormalities found during these surveillances are reported immediately to management. The effectiveness of the maintenance surveillance program is evaluated, periodically, by facility management and the results of the evaluations are used to identify any necessary program improvements.

WSRC Procedure Manual 1Q (Ref. 6) provides the program requirements and responsibilities for planning, performing, and documenting WSB tests. At the WSB, the effectiveness of the maintenance surveillance program will be evaluated periodically by facility management, and the results of the evaluations will be used to identify any necessary program improvements. Abnormalities found as a result of these surveillances will be reported immediately to management.

Consistent with the above-stated requirements, WSRC Procedure Manual 1Q (Ref. 6) specifies the type and extent of test controls to be applied to systems, subsystems, components, and items, based on the functional classification assigned to it. The SSCs covered in the surveillance inspection program are identified in Chapter 4 of this PDSA. The surveillance testing and calibration of Technical Safety Requirements (TSRs) related components will be identified in the TSRs.

10.4.2 CONTROL AND CALIBRATION OF MEASURING AND TEST EQUIPMENT

Subsection 10.5.5 discusses the control and calibration of Measuring and Test Equipment (M&TE), as well as installed process instrumentation. The requirements of WSRC Procedure Manual 1Q (Ref. 6) also apply to M&TE and installed process instrumentation used for in-service surveillance, and are detailed in WSRC Procedure Manual 1Q, Quality Assurance Program Procedures 12-1 and 12-2 (Ref. 6).

10.4.3 TRENDING OF SURVEILLANCE TEST RESULTS

Trending data will be acquired as part of the maintenance surveillance program for long-term performance evaluations. Subsection 10.5.6 of this chapter discusses trending of historical data

obtained from various sources, including surveillance tests. The guidelines described in that section also apply to trending of surveillance test data for various uses in improving the maintenance program.

10.4.4 PROGRAMMATIC REVIEW

WSRC Procedure Manual 1Q (Ref. 6) provides guidance for conducting inspections, including In-Service Inspections (ISIs), of specified SSCs. An ISI is an inspection performed on operable equipment to verify that characteristics of an item remain in compliance with specified requirements. The cognizant technical function and cognizant quality function for a particular facility are responsible for evaluating the processes, activities, and items for which they are responsible and for establishing the level, extent, and acceptance criteria for inspections. The basis for the assignment, level, and intensity of inspections is directly related to functional classifications or design document requirements.

The ISI program at the WSB facility will be implemented as part of the Structural Integrity Program. This program provides for the conduct of ISI of critical SSCs and their supports. The critical SSCs covered in the Structural Integrity Program are identified in Chapter 4 of this PDSA. The surveillance testing and calibration of TSR-related components will be identified in the TSRs. The Structural Integrity Program will establish a process to determine those inspections or measurements needed on the SSCs to ensure that they will perform their intended design functions under operational and accident conditions. This program will provide reasonable assurance that the evidence of structural or functional degradation during services will be detected to ensure that corrective action is taken before the function of the SSC is compromised. The Structural Integrity Program will also be a predictive maintenance activity to complement the overall preventive maintenance program.

The WSRC Procedure Manual 1Y (Ref. 7) states that inspections, audits, reviews, investigations, and self-assessments are necessary for an effective maintenance program. It recommends that senior managers periodically review and assess elements of the maintenance program to assist line managers and supervisors in identifying and correcting program deficiencies. Chapter 14 of this PDSA includes descriptions of inspections at SRS as they would apply to ISIs.

ISIs are planned by the organization performing the inspection and are approved by the Design Authority and the cognizant quality function.

10.4.5 TRAINING OF SURVEILLANCE TESTING PERSONNEL

Chapter 12, Section 12.4, of this PDSA discusses training of maintenance personnel. The requirements of WSRC Procedure Manual 1Y (Ref. 9) described in that section also apply to training conducted for in-service surveillance personnel.

10.5 MAINTENANCE PROGRAM

Maintenance at SRS is performed in accordance with WSRC Procedure Manual 1Y (Ref. 9), which provides implementing procedures for sitewide compliance with U.S. Department of Energy (DOE) 433.1A, *Maintenance Management Program for DOE Nuclear Facilities* (Ref. 10). This section is a summary of the maintenance program that will support the safe operation of the WSB.

10.5.1 MAINTENANCE ORGANIZATION AND ADMINISTRATION

The organization and administration of the maintenance function ensures that a high level of performance in maintenance is achieved through effective implementation and control of maintenance activities. This goal is achieved primarily by establishing WSRC written policies, procedures, standards for maintenance, and by periodically observing and assessing performance.

The WSRC Procedure 1Y Manual (Ref. 9) establishes the requirements and responsibilities for the maintenance (organization and administration) of the WSB maintenance program. It is a primary responsibility of maintenance management to ensure the implementation of site and division policies that affect the maintenance organization. Maintenance organization procedures support contractor management and facility maintenance policies. WSRC Procedure Manual 1Y (Ref. 9) defines the responsibilities for implementing these policies, including the responsibilities of maintenance personnel. Maintenance personnel must clearly understand their authority, responsibility, accountability, and interfaces with other groups. Procedures or other definitive documents specify policies that are used to guide maintenance organization activities. These documents also specify the types of controls necessary to implement maintenance policies, including the function of protecting the WSB from unanalyzed external events.

The WSRC Procedure 1Y Manual (Ref. 9) describes the WSB maintenance program and states the organization, responsibilities, interface, and qualification requirements of the WSB Maintenance Department. The WSB Maintenance organization will be part of the WSRC Maintenance organization and provides matrixed support to the WSB operations manager (see Chapter 17, Subsection 17.3.2). The WSB maintenance organization will provide the following:

- Maintain WSB facilities and ensure that the training and qualification program adequately supports the requirements of the department, the site, and DOE
- Maintain WSB in a safe, quality, cost effective manner; ensuring compliance with site programs, industry standards, and applicable DOE Orders consistent with WSB and WSRC mission statements
- Monitor and ensure that maintenance activities comply with the TSRs, existing procedures, applicable regulations, policies, and programs

The work control system will provide the programmatic method of work control within WSB (Ref. 9) and include the following:

- Transient combustible controls as required by the Fire Protection Program will be implemented for maintenance activities through the work control process.
- When any portion of the HAW transfer line is temporarily exposed for maintenance activities, specific controls as required by the Transfer Control Program will be implemented through the work control process.

10.5.2 TRAINING AND QUALIFICATION OF MAINTENANCE PERSONNEL

Maintenance managers are responsible for helping to select high-quality personnel for maintenance responsibilities. These managers are involved in defining entry-level criteria and in screening new personnel. A maintenance training and qualification program is required by WSRC Procedure Manual 1Y (Ref. 9) to develop and maintain the knowledge and skills needed by maintenance personnel to effectively perform maintenance activities. Maintenance managers are directly involved in training maintenance personnel.

The WSRC site training organization implements maintenance training programs that meet the intent of established industrial guidelines and that address specific company and facility needs. These programs are supported and guided by the maintenance organization.

On-the-job training is a formal part of the maintenance-training program. Chapter 12, Section 12.4, of this PDSA provides further information regarding on-the-job training, training program development, and requirements.

10.5.3 MAINTENANCE FACILITIES, EQUIPMENT, AND TOOLS

Adequate maintenance facilities and equipment are available to support the entire range of facility operations and maintenance training activities. To determine the adequacy of maintenance facilities, equipment, and tools, assessments of the maintenance facilities are performed in accordance with the requirements of WSRC Procedure Manual 1Y (Ref. 9).

10.5.4 POST-MAINTENANCE TESTING

Post-maintenance testing will be performed to verify that components and systems are capable of performing their intended function when returned to service following maintenance and to ensure that the original deficiency is corrected and that no others are created. A post-maintenance test will be performed after selected corrective maintenance activities and after some preventive maintenance activities. The test performed will be commensurate with the maintenance work performed and the importance of the equipment to safe and reliable operations. The post-maintenance-testing program includes the following (Ref. 9):

- Determining post-maintenance test requirements

- Determining the scope of post-maintenance testing to ensure that appropriate levels of testing are applied to facility equipment and that redundant testing is minimized
- Tracking the status of equipment that has undergone maintenance to ensure that all testing is completed prior to the equipment being returned to service
- Conducting proper post-maintenance tests, documenting the results, and verifying that the resulting data meet acceptance criteria

Test requirements and acceptance criteria will be obtained from the following sources (WSRC Procedure Manual 1Y [Ref. 9]):

- Plant modification traveler
- Temporary modification package
- Selected maintenance activities and post-maintenance tests
- Maintenance history
- Vendor manuals
- Facility operations
- Cognizant technical function and other sources

WSRC Procedure Manual 1Q (Ref. 6) requires that a program be established to control post-maintenance testing, particularly for cases where more than one group is involved in the testing. At the WSB, facility operations will be responsible for maintaining the status of incomplete, post-maintenance testing and for coordinating post-maintenance testing performance. The operations organization reviews the completed post-maintenance test results and approves the Work Order to document the satisfactory completion of the maintenance or modification work.

10.5.5 CONTROL AND CALIBRATION OF MEASURING AND TEST EQUIPMENT

WSRC Procedure Manual 1Q (Ref. 6) requires that a program for the control and calibration of M&TE should be instituted to ensure the accurate performance of facility instrumentation and equipment for testing, calibration, and repairs. M&TE includes all devices or systems used to inspect, test, calibrate, measure, or troubleshoot to control or acquire data for verifying the conformance of an instrument or piece of equipment to specified requirements. M&TE is calibrated and controlled in accordance with the requirements of WSRC Procedure Manual 1Q (Ref. 6).

10.5.6 MAINTENANCE HISTORY AND TRENDING

An equipment repair history and trending program has been established for selected equipment and is maintained to provide historical information for maintenance planning and to support the maintenance and performance trending analysis of facility systems and components (WSRC Procedure Manual 1Y [Ref. 9]). The equipment repair history is used to support maintenance activities, upgrade maintenance programs, optimize equipment performance, and improve equipment reliability. The equipment history program allows the retrieval of information on

equipment maintenance and performance to improve facility reliability. These data, combined with operating experience at similar facilities, operating logs and records, and facility performance monitoring data, are used in analyzing trends and failures in equipment performance and in making adjustments to the maintenance program.

Maintenance trending, the process used to evaluate recurring maintenance problems and to propose corrective actions for maintenance-related problems, is applied to selected equipment to ensure that a systematic analysis methodology is used to determine and correct root causes of problems, unplanned events, and occurrences related to maintenance activities.

WSRC Procedure Manual 1Y (Ref. 9) describes the maintenance history program used at the WSB for the collection of maintenance documentation and data, for the generation of historical information to support maintenance work planning, and for the trending of systems and components.

10.6 REFERENCES

1. Standards/Requirements Identification Document (S/RID). WSRC-RP-94-1268, Washington Savannah River Company, Aiken, SC.

2. Compliance Assurance Manual. WSRC Procedure Manual 8B, Washington Savannah River Company, Aiken, SC, March 1998.

3. Assessment Manual. WSRC Procedure Manual 12Q, Washington Savannah River Company, Aiken, SC.

4. Configuration Management. WSRC Procedure Manual 7E, Washington Savannah River Company, Aiken, SC.

5. Startup Manual. WSRC Procedure Manual 5E, Washington Savannah River Company, Aiken, SC.

6. Quality Assurance Manual. WSRC Procedure Manual 1Q, Washington Savannah River Company, Aiken, SC.

7. Facility Design Description Waste Solidification Building, G-FDD-00007, Rev. 3, Washington Savannah River Company, Aiken, SC.

8. "Functional Acceptance Criteria," Procedure 2.26, Rev. 3, Conduct of Engineering and Technical Support Procedure Manual. WSRC Procedure Manual E7, Westinghouse Savannah River Company, Aiken, SC, July 2004.

9. Conduct of Maintenance. WSRC Procedure Manual 1Y, Washington Savannah River Company, Aiken, SC.

10. Maintenance Management Program for DOE Nuclear Facilities. DOE Order 433.1A, U.S. Department of Energy, Washington, DC, February 2007.

WSRC-SA-2003-00002
Rev. 0

WASTE SOLIDIFICATION BUILDING PRELIMINARY DOCUMENTED SAFETY ANALYSIS

CHAPTER 11

OPERATIONAL SAFETY

JULY 2008

SAVANNAH RIVER SITE
Aiken, SC 29808 · www.srs.gov

PREPARED FOR THE U.S. DEPARTMENT OF ENERGY UNDER CONTRACT NO. DE-AC09SR18500

DISCLAIMER

This document was prepared by Washington Safety Management Solutions LLC (WSMS), under contract with Washington Savannah River Company (WSRC), subject to the warranty and other obligations of that contract and in furtherance of WSRC's contract with the United States Department of Energy (DOE).

Release to and Use by Third Parties. As it pertains to releases of this document to third parties, and the use of or reference to this document by such third parties in whole or in part, neither WSMS, WSRC, DOE, nor their respective officers, directors, employees, agents, consultants or personal services contractors (i) make any warranty, expressed or implied, (ii) assume any legal liability or responsibility for the accuracy, completeness, or usefulness, of any information, apparatus, product or process disclosed herein or (iii) represent that use of the same will not infringe privately owned rights. Reference herein to any specific commercial product, process, or service by trademark, name, manufacture or otherwise, does not necessarily constitute or imply endorsement, recommendation, or favoring of the same by WSMS, WSRC, DOE or their respective officers, directors, employees, agents, consultants or personal services contractors. The views and opinions of the authors expressed herein do not necessarily state or reflect those of the United States Government or any agency thereof.

CONTENTS

Page

11.0 OPERATIONAL SAFETY 1

11.1 INTRODUCTION 1

11.1.1 Objective 1

11.1.2 Scope 2

11.2 REQUIREMENTS 1

11.3 CONDUCT OF OPERATIONS 1

11.3.1 Shift Routines and Operating Practices 1

11.3.2 Control Area Activities 2

11.3.3 Communications 2

11.3.4 Control of On-Shift Training 2

11.3.5 Control of Equipment and Systems Status 3

11.3.6 Lockouts and Tagouts 3

11.3.7 Independent Verification Practices 3

11.3.8 Logkeeping 3

11.3.9 Operations Turnover 4

11.3.10 Operations Aspects of Facility Chemistry and Unique Processes 4

11.3.11 Required Reading 4

11.3.12 Timely Orders to Operators 4

11.3.13 Operator Aid Postings 4

11.3.14 Equipment and Piping Labeling 5

11.4 FIRE PROTECTION 1

11.4.1 Fire Hazards 1

11.4.2 Fire Protection Program And Organization 1

11.4.3 Combustible Loading Control.....3

11.4.4 Firefighting Capabilities 6

11.4.5 Firefighting Readiness Assurance.....7

11.5 REFERENCES 1

ACRONYMS

DOE	U. S. Department of Energy
FDD	Facility Design Description
PDSA	Preliminary Documented Safety Analysis
S/RID	Standards/Requirements Identification Document
SRS	Savannah River Site
WSB	Waste Solidification Building
WSRC	Washington Savannah River Company

11.0 OPERATIONAL SAFETY

11.1 INTRODUCTION

This chapter addresses operational safety and fire protection considerations for the Waste Solidification Building (WSB). Ensuring that the facility can be operated safely requires the attention and dedication of facility personnel and will be formally implemented through a conduct of operations program. The safety program will ensure that the individuals responsible for operating and maintaining the facility are trained, understand the hazards, and have adequate tools and resources to carry out their required activities in a safe manner.

This chapter focuses on two aspects of operational safety: conduct of operations and fire protection programs. Other important aspects of operational safety are described in Chapter 10, Maintenance; Chapter 12, Procedures and Training; Chapter 13, Human Factors; and Chapter 17, Management. Several other chapters identify operational activities that must be part of a conduct of operations program. These include Chapter 6, Criticality Safety; Chapter 7, Radiation Protection; Chapter 8, Hazardous Material Program; Chapter 14, Quality Assurance; and Chapter 15, Emergency Preparedness. The requirements from all these programs, when integrated into a conduct of operations program, identify the essential worker activities to ensure that the WSB can be operated in a manner that provides adequate protection to the general public, workers, and the environment.

11.1.1 OBJECTIVE

This chapter describes the commitments and essential characteristics of the conduct of operations and fire protection programs that will be implemented for the WSB to satisfy the requirements of Title 10, Code of Federal Regulations, Part 830 (Ref. 1). It describes the basis for the conduct of operations and fire protection programs, and the approach that will be taken to develop them. The overall operations approach will incorporate existing site-wide programs and adapt them to practice at the WSB by developing facility-specific plans that are fully integrated with the site-wide programs to address facility-specific safety considerations. The effectiveness of these programs continues to be demonstrated at the Savannah River Site (SRS).

Section 11.3 of this chapter of the Preliminary Documented Safety Analysis (PDSA) specifically focuses on the bases for the conduct of operations program specified by the U.S. Department of Energy (DOE) 5480.19, “Conduct of Operations Requirements for DOE Nuclear Facilities” (Ref. 2). DOE 5480.19 (Ref. 2) also addresses many other operational safety topics. Only those specific to the conduct of operations are discussed in Section 11.3.

11.1.2 SCOPE

This chapter discusses the general aspects of the conduct of operations and fire protection programs. The scope of this chapter includes the following:

- Identification of the aspects of the conduct of operations program
- Integrated summary of the main features of the conduct of operations program
- Description of the fire protection program

The WSRC Procedure Manuals 2S and 2Q (Ref. 3, 4) describe the overall site conduct of operations and the fire protection programs. These site-wide programs will form the basis for developing the corresponding WSB-specific programs and procedures.

This chapter is not intended to be the vehicle for demonstrating compliance with operational safety and fire protection Standards/Requirements Identification Documents (S/RIDs), but rather is intended to summarize the main aspects of conduct of operations implementation and fire protection at the WSB (Ref. 5).

11.2 REQUIREMENTS

S/RIDs state the codes, standards, and regulations governing conduct of operations and fire protection at SRS (Ref. 5). The programmatic compliance assessment has been performed against the S/RIDs and documented as specified in the Washington Savannah River Company (WSRC) Procedure Manual 8B (Ref. 6). The facility-specific codes and standards required for the design and construction of the WSB are listed in the Facility Design Descriptions (FDDs) and system design descriptions of the WSB.

Additionally, the WSB FDD lists the fire protection design criteria (Ref. 7, Section 2.1.7.2). Section 2.1.7.2 of the FDD states that the design will meet the requirements of DOE-STD-1066-99 and the site requirements in WSRC Procedure Manual 2Q (Ref. 8, 4). The FDD lists eight specific design requirements for the process and fire protection systems that shall be met by the design.

11.3 CONDUCT OF OPERATIONS

SRS has established and maintains a conduct of operations program to enhance the safe operation of its facilities. WSRC Procedure Manual 2S (Ref. 3) details the essential requirements of facility-specific conduct of operations programs. WSB management will place great emphasis on ensuring that the facility-specific conduct of operations program is consistent with site-wide procedures. The facility-specific program will also incorporate procedures unique to the facility into daily activities. Many of these activities will support the proper functioning of safety equipment specified in Chapter 4 of this PDSA and the technical requirements specified in Chapter 5. Unique hazards posed by radiation protection and the hazardous material program will also be incorporated into the facility-specific conduct of operations program. Site-wide WSRC Procedure Manual 2S (Ref. 3) will provide the framework for these facility-specific activities.

Periodic training meetings on the conduct of operations will be held for WSB personnel. In addition, periodic self-assessments (discussed in Chapter 17, Management) will be conducted to ensure that facility workers are adequately performing the activities described in the facility-specific conduct of operations program. The site-wide procedures in WSRC Procedure Manual 2S (Ref. 3) will be used to guide such self-assessments.

11.3.1 SHIFT ROUTINES AND OPERATING PRACTICES

The conduct of operations program specifies the shift routines and operating practices that apply to facility operations and support personnel. The program includes standards for professional conduct, good watch standing practices, equipment monitoring, and management responsibilities that are fundamental to operating a facility. WSRC Procedure Manual 2S (Ref. 3) includes issues such as the following:

- Facility operating practices
- Operation during abnormal or emergency conditions
- Authority to operate equipment
- Operator rounds and tours
- Personnel protection
- Shift operating bases
- Resetting of alarms or protective devices
- Potentially distractive written material and devices
- Key control
- Overtime

The WSB operations manager will be responsible for all day-to-day operations and will be aware of all activities affecting the facility. The facility shift first line manager will direct the overall operation of the facility. All WSB shift personnel will be under the direct supervision of the

assigned shift first line manager. Only trained and qualified personnel will operate equipment, and the overall operation of the facility will be governed by approved procedures. Chapter 2 of this PDSA identifies the major equipment and components of the WSB. Chapter 4 identifies the structures, systems, and components that fulfill a required safety function. Chapter 5 specifies the facility-specific technical specifications. Specific attention will be placed on the training and qualification of personnel to ensure that shift routines and operating practices are consistent with technical specifications and support the proper functioning of the structures, safety systems, and components that have been designated as Safety Significant.

11.3.2 CONTROL AREA ACTIVITIES

The WSB will follow WSRC Procedure Manual 2S (Ref. 3) for the performance of control area activities to develop its facility-specific control area procedures.

11.3.3 COMMUNICATIONS

The WSB will follow the guidelines for communications specified in WSRC Procedure Manual 2S (Ref. 3). WSRC Procedure Manual 2S (Ref. 3) provides the guidance and requirements for communications within the facility, for both the individuals initiating the contact and those individuals being contacted. WSRC Procedure Manual 2S (Ref. 3) also stipulates that emergency communication systems be tested periodically to ensure that they are functioning properly. Any faults found during testing are repaired on a high-priority basis.

11.3.4 CONTROL OF ON-SHIFT TRAINING

The WSB will follow WSRC Procedure Manuals 2S and 4B for the control of on-shift training (Ref. 3, 9). The SRS program governing on-shift training practices is detailed in these manuals, which includes the following topics:

- On-shift training program development
- Adherence to programs
- Trainer/evaluator qualification
- Control of trainees
- Operator qualifications program approval
- Training documentation
- Suspension of training
- Maximum number of trainees

11.3.5 CONTROL OF EQUIPMENT AND SYSTEMS STATUS

The WSB will follow WSRC Procedure Manual 2S (Ref. 3) for the control of equipment and systems status. The SRS program governing equipment and systems status is detailed in this manual, which includes the following topics:

- Status change authorization and reporting
- Status boards
- Equipment and system alignments
- Equipment locking for administrative control
- Equipment deficiency identification and documentation
- Work authorization and documentation
- Equipment post-maintenance testing and return to service
- Alarm status
- Temporary modification control

11.3.6 LOCKOUTS AND TAGOUTS

The WSB will follow WSRC Procedure Manual 8Q for implementing lockouts and tagouts (Ref. 10).

11.3.7 INDEPENDENT VERIFICATION PRACTICES

The WSB will follow WSRC Procedure Manual 2S (Ref. 3) for independent verification practices. The SRS program governing independent verification practices is detailed in this manual, which includes the following topics:

- Components requiring independent verification
- Occasions requiring independent verification
- Verification techniques
- Guidelines for personnel performing independent verifications

11.3.8 LOGKEEPING

The conduct of operations program detailed in WSRC Procedure Manual 2S (Ref. 3) specifies the requirements for establishing and maintaining operating logs for key operations positions.

11.3.9 OPERATIONS TURNOVER

The WSB will follow WSRC Procedure Manual 2S (Ref. 3) for operations turnover practices. The SRS program governing operations turnover practices is detailed in this manual, which includes the following topics:

- Document review
- Walkdowns
- Discussion and exchange of information
- Relief occurring during the shift

11.3.10 OPERATIONS ASPECTS OF FACILITY CHEMISTRY AND UNIQUE PROCESSES

The WSB will follow WSRC Procedure Manual 2S (Ref. 3) for operational monitoring of facility chemistry and unique processes. Chapter 2, Section 2.5, of this PDSA discusses the chemistry and processes of the WSB.

11.3.11 REQUIRED READING

All operations personnel and those organizations that provide direct support to operations organizations are required to participate in the required reading program detailed in WSRC Procedure Manual 2S (Ref. 3). This program is a site method for ensuring that the facility staff is informed of important information that will enhance their ability to effectively perform their job assignments. This program will be instituted as an ongoing program at the WSB to keep personnel abreast of policy or procedure changes.

The required reading procedure in WSRC Procedure Manual 2S (Ref. 3) will be incorporated into the WSB facility-specific conduct of operations program. By adopting this program, it will be ensured that appropriate site- and facility-specific material will be included in the reading program and properly completed by personnel. The guidance in WSRC Procedure Manual 2S (Ref. 3) associated with the establishment and maintenance of records will also be adopted in the WSB required reading program.

11.3.12 TIMELY ORDERS TO OPERATORS

Shift orders are issued to communicate short-term information to operations personnel; standing orders are issued to communicate long-term information to operations personnel.

11.3.13 OPERATOR AID POSTINGS

The WSB will follow WSRC Procedure Manual 2S (Ref. 3) for operator aid postings. The operator aid-posting program describes the procedures for requesting, authorizing, documenting,

placing, and reviewing operator aids to ensure that such aids are current, complete, and necessary.

11.3.14 EQUIPMENT AND PIPING LABELING

The WSB will follow WSRC Procedure Manual 2S (Ref. 3) for equipment and piping labeling. WSB personnel will implement the requirements of WSRC Procedure Manual 2S (Ref. 3) (and any deviations from the manual) through the use of facility-specific procedures.

11.4 FIRE PROTECTION

The WSRC Procedure Manual 2Q (Ref. 4) discusses the criteria for fire protection activities addressed under conduct of operations.

11.4.1 FIRE HAZARDS

A project fire hazards analysis of the WSB was performed based on the design of the WSB current at that time (Ref. 11). WSB will close the open items identified in the project fire hazards analysis. Based on the analysis, the WSB meets the DOE fire protection objectives. The content of this report is valid, but may not reflect the final design of the WSB. As additional fire hazards information becomes available, it will be included.

11.4.2 FIRE PROTECTION PROGRAM AND ORGANIZATION

The S/RIDs specify the SRS fire protection program requirements (Ref. 5). The program is implemented at the site level through WSRC Procedure Manual 2Q (Ref. 4). The program requirements ensure that, in the event of a fire, the public is protected from uncontrolled releases of radioactive, toxic, and hazardous materials to the environment. The program uses fire detection and extinguishing systems and equipment, administrative controls and procedures, and trained personnel to meet these goals.

Consistent with WSRC Procedure Manual 2Q (Ref. 4), the WSB fire protection plan will be developed to ensure compliance with S/RIDs and WSRC Procedure Manual 2Q (Ref. 5, 4). This fire protection plan will describe the programs, procedures, and physical features of the fire detection and suppression system that are designed to prevent fires from starting, to detect fires quickly, and to suppress any fires that do occur by extinguishing them or controlling them until further response arrives, thus, limiting fire damage and minimizing the impact on the mission of the WSB. The fire protection plan will also describe the responsibilities of organizations within the WSB with respect to fire protection. WSRC Procedure Manual 2Q (Ref. 4) and facility-specific procedure manuals establish the plans and procedures that implement the fire protection plan in the WSB.

The WSB will follow the SRS fire protection program as implemented by WSRC Procedure Manual 2Q (Ref. 4). The SRS fire protection program and organization are detailed in this manual, which includes the following topics:

- Fire protection policy, organization, and administrative plans and procedures
- Fire and explosion protection criteria
- Fire protection requirements
- Fire protection reviews

The WSB will have a memorandum of agreement that defines the responsibilities of the organizations involved in the operation, testing, and maintenance of fire protection equipment in the WSB and for fire department response.

11.4.3 COMBUSTIBLE LOADING CONTROL

The WSB will follow WSRC Procedure Manual 2Q (Ref. 4) for transient combustible control. WSB personnel will implement WSRC Procedure Manual 2Q (Ref. 4) through the use of a facility-specific procedure for the control of combustibles and flammables.

11.4.4 FIREFIGHTING CAPABILITIES

The *Fire Department Emergency Response Baseline Needs Assessment* (Ref. 12) identify the F Area, including the WSB, as requiring a maximum fire department response due to the general hazard potential. Therefore, firefighters would respond from all three stations. As currently configured, the primary SRS Fire Department initial response would come from Station No. 1, located at the intersection of C Road and 5 Road, 2.4 miles from the F-1 gate. This station can respond with a pumper truck. For large fires, the pumper would hook up to fire hydrants that will be strategically located around the perimeter of the WSB. The secondary response would come from Station No. 3, followed by Station No. 2 with additional pumper trucks. The estimated response time from Station No. 1 to F Area is 13 minutes. The minimum qualification for SRS firefighters is certification as a Fire Fighter III in South Carolina, or the equivalent.

The SRS Fire Department will provide a fire control preplan for this new building. The fire protection plan for the WSB will assign responsibility to perform the facility-specific functions specified in the *Fire Protection Program Manual*, WSRC Procedure Manual 2Q (Ref. 4) (such as fire extinguisher inspections) to qualified staff. DOE Order 420.1B (Ref. 13) requirement for a documented fire protection plan capable of being implemented will be met for this building. Consistent with this order, the facility manager will provide personnel who will have fire warden training, which includes fire equipment inspections. All the building occupants will receive general employee training and ongoing consolidated annual training, which includes basic fire training. As part of this training, they will learn the following:

- The importance of selecting the proper fire extinguisher
- The importance of good housekeeping to keep the transient combustible loading low
- Ways to identify unsafe accumulations of transient combustibles
- The correct way to inspect fire extinguishers for obvious defects that would prevent their proper functioning

As currently configured, access to the building for emergency responders will be by way of the New F-Area Perimeter Road to the west of the building. Security measures and limited accessibility requirements will be in place, and the procedures for emergency access will be similar to other protected facilities at SRS. The fire department responders will have full access.

The fire control plans for the WSB facility will satisfy the requirement in the S/RIDs to have well-planned fire response preplans (Ref. 12, 5). In addition to fire control preplans, the building will have a fire response procedure and a fire alarm response procedure detailing facility response and providing decision guidance. WSRC Procedure Manual 2Q2 (Ref. 14) provides specific information on the fire-fighting equipment and capabilities on the SRS. The SRS fire-fighting capabilities program is detailed in this manual, which includes the following topics:

- Fire protection personnel, qualifications, and training requirements
- Fire-fighting in radiation and hazardous chemical environments
- Fire response procedures
- Fire-fighting equipment

The overall requirements for facility fire protection coordinators, on-duty fire wardens, fire watches, and fire patrols will be summarized in the WSB fire protection plan. Other facility specific procedures will implement these requirements. Detailed guidance on facility response is contained in the fire response procedures and fire alarm response procedures that will be developed before facility start-up. The fire protection plan for the WSB will be consistent with the site-wide fire protection program and will state that the SRS Fire Department is the primary fire-fighting organization for the WSB.

11.4.5 FIREFIGHTING READINESS ASSURANCE

The WSB will follow WSRC Procedure Manual 2Q (Ref. 4) for fire-fighting readiness assurance. WSB personnel will implement the WSRC Procedure Manual 2Q (Ref. 4) through several facility-specific procedures. In addition, the SRS Fire Department and the Digital Control and Systems Department have procedures for inspecting and testing fire protection equipment and systems. The SRS fire-fighting readiness assurance program is detailed in this manual, which includes the following topics:

- Fire prevention inspection program
- Fire safety drills and exercises
- Fire protection program reports and recordkeeping practices

The WSB will integrate the facility-specific plans and procedures with the corresponding site-wide plans and procedures and will fully use the site-wide capabilities to ensure readiness to effectively respond to a fire in a WSB building.

11.5 REFERENCES

1. Nuclear Safety Management. Code of Federal Regulations. 10 CFR 830, Subpart B, Safety Basis Requirements, Office of the Federal Register, National Archives and Records Administration, U.S. Government Printing Office, Washington D.C.

2. Conduct of Operations Requirements for DOE Nuclear Facilities. DOE Order 5480.19, Change 2, U.S. Department of Energy, Washington, DC, October 23, 2001.

3. Conduct of Operations Manual. WSRC Procedure Manual 2S, Washington Savannah River Company, Aiken, SC.

4. WSRC Fire Protection Program Manual. WSRC Procedure Manual 2Q, Washington Savannah River Company, Aiken, SC.

5. Standards/Requirements Identification Document. WSRC-RP-94-1268, Washington Savannah River Company, Aiken, SC.

6. Compliance Assurance Manual. WSRC Procedure Manual 8B, Washington Savannah River Company, Aiken, SC.

7. WSB Facility Design Description. G-FDD-F-00007, Revision 3, Washington Savannah River Company, Aiken, SC, August 2007.

8. Fire Protection Design Criteria. DOE-STD-1066-99, U.S. Department of Energy, Washington, DC, July 1999.

9. WSRC Training and Qualification Program Manual. WSRC Procedure Manual 4B, Washington Savannah River Company, Aiken, SC.

10. Employee Safety Manual. WSRC Procedure Manual 8Q, Washington Savannah River Company, Aiken, SC.

11. Project Fire Hazards Analysis for Waste Solidification Building. F-FHA-F-00033, Rev. C, Washington Savannah River Company, Aiken, SC, November 2007.

12. Fire Department Emergency Response Baseline Needs Assessment. WSRC-RP-2000-00168, Rev. 0, Washington Savannah River Company, Aiken, SC, August 10, 2000.

13. Facility Safety. DOE Order 420.1B, U.S. Department of Energy, Washington, D.C., December 2005.

14. Fire Department Administrative Guidelines. WSRC Procedure Manual 2Q2, Washington Savannah River Company, Aiken, SC.

WSRC-SA-2003-00002
Rev. 0

WASTE SOLIDIFICATION BUILDING PRELIMINARY DOCUMENTED SAFETY ANALYSIS

CHAPTER 12

PROCEDURES AND TRAINING

JULY 2008

SAVANNAH RIVER SITE
Aiken, SC 29808 · www.srs.gov

PREPARED FOR THE U.S. DEPARTMENT OF ENERGY UNDER CONTRACT NO. DE-AC09SR18500

DISCLAIMER

This document was prepared by Washington Safety Management Solutions LLC (WSMS), under contract with Washington Savannah River Company (WSRC), subject to the warranty and other obligations of that contract and in furtherance of WSRC's contract with the United States Department of Energy (DOE).

Release to and Use by Third Parties. As it pertains to releases of this document to third parties, and the use of or reference to this document by such third parties in whole or in part, neither WSMS, WSRC, DOE, nor their respective officers, directors, employees, agents, consultants or personal services contractors (i) make any warranty, expressed or implied, (ii) assume any legal liability or responsibility for the accuracy, completeness, or usefulness, of any information, apparatus, product or process disclosed herein or (iii) represent that use of the same will not infringe privately owned rights. Reference herein to any specific commercial product, process, or service by trademark, name, manufacture or otherwise, does not necessarily constitute or imply endorsement, recommendation, or favoring of the same by WSMS, WSRC, DOE or their respective officers, directors, employees, agents, consultants or personal services contractors. The views and opinions of the authors expressed herein do not necessarily state or reflect those of the United States Government or any agency thereof.

CONTENTS

Page

12.0 PROCEDURES AND TRAINING 12.1-1

12.1 INTRODUCTION 12.1-1

12.1.1 Objective 12.1-1

12.1.2 Scope 12.1-1

12.2 REQUIREMENTS 12.2-1

12.3 PROCEDURES PROGRAM 12.3-1

12.3.1 Development of Procedures 12.3-1

12.3.2 Maintenance of Procedures 12.3-1

12.4 TRAINING PROGRAM 12.4-1

12.4.1 Development of Training 12.4-1

12.4.2 Hazardous Communication Training 12.4-2

12.4.3 Maintenance of Training 12.4-2

12.4.4 Modification of Training Materials 12.4-2

12.5 REFERENCES 12.5-1

ACRONYMS

PDSA	Preliminary Documented Safety Analysis
S/RID	Standards/Requirements Identification Document
SRS	Savannah River Site
WSB	Waste Solidification Building
WSRC	Washington Savannah River Company

12.0 PROCEDURES AND TRAINING

12.1 INTRODUCTION

12.1.1 OBJECTIVE

The objective of this chapter is to provide information on the processes by which technical procedures and training are developed, verified, and validated at the Savannah River Site (SRS), and the process requirements that will govern the development, verification, and validation of the technical procedures and training at the Waste Solidification Building (WSB).

12.1.2 SCOPE

This chapter discusses the processes by which the technical content of procedures and training will be developed, verified, and validated at the WSB. In addition, procedures and training elements will be developed to keep the processes current through the use of feedback and continuous improvement, and these are summarized. These processes will ensure that the WSB is operated and maintained by personnel who are qualified and competent to carry out their job responsibilities.

Training and Qualification Program Manual, Washington Savannah River Company (WSRC) Procedure Manual 4B (Ref. 1) describes the site-level training program. This chapter describes the application of the site- and division-level programs by the WSB.

12.2 REQUIREMENTS

Standards/Requirements Identification Documents (S/RIDs) (Ref. 2) state the codes, standards, and regulations governing the procedures and training elements of SRS. The programmatic compliance assessment will be performed against the S/RIDs and documented as specified in the WSRC Procedure Manual 8B (Ref. 3). The Standards Management/Compliance Section maintains records of the programmatic compliance assessments. In addition to these site and federal requirements, the design must comply with design criteria and associated training considerations as specified in WSB facility design description document (Ref. 4).

12.3 PROCEDURES PROGRAM

It is the policy of WSRC that the primary consideration in the operation of SRS facilities is the safety of the general public, employees, facility equipment, and the environment. This policy is accomplished by ensuring that operations and support organizations perform all activities affecting quality in accordance with approved procedures that specify the requirements needed to perform work in a safe and efficient manner. This policy is stated in WSRC Procedure Manual 1Q (Ref. 5). It is implemented at the site level by WSRC Procedure Manual 2S (Ref. 6) for technical and response procedures and by WSRC Procedure Manual 1B (Ref. 7) for program-specific administrative procedures.

12.3.1 DEVELOPMENT OF PROCEDURES

Conduct of Operations Manual, WSRC Procedure Manual 2S (Ref. 6), provides guidance on the preparation, validation, verification, and administration of technical and response procedures. *Underwriter's Guide for Procedure Writing*, WSRC-SCD-2 (Ref. 8), provides additional guidance on the required content, necessary research, and format of technical procedures. Technical procedures include standard operating procedures, standard operating manuals, maintenance, testing, surveillance, and periodic procedures. In addition, WSRC Procedure Manual 2S (Ref. 6) provides specific format guidance on abnormal operating procedures, emergency operating procedures, and alarm response procedures. WSRC Procedure Manual 1B (Ref. 7) governs the generation of program-specific administrative procedures that define the communication and coordination activities necessary to carry out the facility's technical programs. The WSB procedures are developed to comply with these guiding documents.

The emergency plan-related procedures, such as emergency preparedness administrative, implementing and program procedures, are distinct from alarm response procedures, emergency operating procedures, and abnormal operating procedures and are developed and controlled in accordance with the requirements of WSRC Procedure Manual 2S (Ref. 6) and the SRS Emergency Plan, WSRC-SCD-7 (Ref. 9).

The WSB startup test program procedures will be developed and controlled in accordance with WSRC Procedure Manual 5E (Ref. 10) and are discussed in Chapter 10 of this Preliminary Documented Safety Analysis (PDSA).

12.3.2 MAINTENANCE OF PROCEDURES

WSRC Procedure Manual 2S (Ref. 6) provides guidance regarding the maintenance and control of procedures to ensure proper dissemination and utilization of facility procedures. Procedures that are controlled documents and records are handled according to the quality assurance requirements described in Chapter 14 of this PDSA.

Prior to issuance of approved procedures, the procedure owner and training and procedures coordinator determine the effective or implementation date of the procedure, based on the need for training, the timetable for completion, and the urgency (safety considerations) associated with

the changes made to the procedure. The identified training is implemented through the lessons learned program by way of required reading, shift briefing, qualification briefing, classroom, or on-the-job training.

12.4 TRAINING PROGRAM

The mission of the SRS training program is to develop programs that ensure that site operations are conducted in accordance with the highest standards of safety, health, and environmental protection. This mission is accomplished by ensuring that personnel performing operations at SRS meet the qualification and certification requirements and are trained in the performance and requirements of their duties. A matrix of the WSB personnel trainings and qualifications will be maintained in each control room.

The S/RIDs (Ref. 2) identify the requirements for establishing performance-based training programs and personnel qualification requirements for U.S. Department of Energy nonreactor nuclear facilities. WSRC Procedure Manual 4B (Ref. 1) implements these requirements at the site level. The WSB will follow the procedures and requirements of WSRC Procedure Manual 4B (Ref. 1) to implement its training program. As a result, any redundant division-level or facility-level procedures will be phased out and canceled. Only those division-level or facility-level procedures determined to be needed to supplement the site-level procedures will be retained or developed. Facility-specific administrative guidelines, covering the following topics, will also be developed to apply throughout the WSB:

- WSB employee training program
- Personnel selection and training requirements
- Oral boards and facility walkthrough examinations
- Training exceptions and extensions
- Conduct of WSRC Procedure Manual 2S (Ref. 6) drills
- Personnel certification/qualification
- Lessons learned program

12.4.1 DEVELOPMENT OF TRAINING

WSRC Procedure Manual 4B (Ref. 1) provides requirements and guidance for the development of the following:

- Analysis of training requirements
- Design of training
- Development of training materials
- Instructor training and qualification
- Implementation of training
- On-the-job training

The SRS general employee training program includes site-level information on the following:

- SRS facilities
- Site policies, procedures, and instructions
- Radiological health and safety
- Industrial safety/hygiene
- Fire protection
- Security
- Emergency management
- Quality assurance
- Criticality safety

To supplement the site training, WSB-specific training courses will also be provided to facility personnel. Facility-specific details that will be communicated to personnel will include WSB-specific requirements regarding quality assurance, radiological controls, emergency preparedness, and waste management

12.4.2 HAZARDOUS COMMUNICATION TRAINING

Chapter 10, Sections 10.4 and 10.5, of this PDSA discuss job-specific training, such as the training of surveillance testing and maintenance personnel.

12.4.3 MAINTENANCE OF TRAINING

The training programs must reflect actual plant conditions and current procedures, and necessary coordination must be performed before introducing new training programs or introducing changes in procedures covered by training programs. WSRC Procedure Manual 4B (Ref. 1) covers the establishment of the training manager committee, training oversight and assessment, and the maintenance of training records.

12.4.4 MODIFICATION OF TRAINING MATERIALS

WSRC Procedure Manual 4B (Ref. 1) describes the methods used to identify and correct technical or human factors deficiencies in the facility training programs, including personnel examinations and the lessons learned program. The manual gives details on how to incorporate changes to training materials, administer training development requests, and evaluate training effectiveness.

Changes to facility training are initiated through regular reviews as well as through normal routes (e.g., task analysis, procedure revisions, training manual revisions, lessons learned, and management directives).

12.5 REFERENCES

1. WSRC Training and Qualification Program Manual. WSRC Procedure Manual 4B, Washington Savannah River Company, Aiken, SC.

2. Standards/Requirements Identification Document. Washington Savannah River Company, Aiken, SC.

3. Compliance Assurance Manual. WSRC Procedure Manual 8B, Washington Savannah River Company, Aiken, SC.

4. Waste Solidification Building, Facility Design Description. G-FDD-F-00007, Rev. 0, Westinghouse Savannah River Company, Aiken, SC, May 28, 2003.

5. Savannah River Site Quality Assurance Manual. WSRC Procedure Manual 1Q, Washington Savannah River Company, Aiken, SC.

6. Conduct of Operations Manual. WSRC Procedure Manual 2S, Washington Savannah River Company, Aiken, SC.

7. WSRC Management Requirements and Procedures. WSRC Procedure Manual 1B, Washington Savannah River Company, Aiken, SC.

8. Writer's Guide for Technical Procedures. WSRC-SCD-2, Washington Savannah River Company, Aiken, SC.

9. SRS Emergency Planning. WSRC Procedure Manual SCD-7, Washington Savannah River Company, Aiken, SC.

10. Startup Test Manual. WSRC Procedure Manual 5E, Washington Savannah River Company, Aiken, SC.

WSRC-SA-2003-00002
Rev. 0

WASTE SOLIDIFICATION BUILDING PRELIMINARY DOCUMENTED SAFETY ANALYSIS

CHAPTER 13

HUMAN FACTORS

JULY 2008

SAVANNAH RIVER SITE
Aiken, SC 29808 · www.srs.gov

PREPARED FOR THE U.S. DEPARTMENT OF ENERGY UNDER CONTRACT NO. DE-AC09SR18500

DISCLAIMER

This document was prepared by Washington Safety Management Solutions LLC (WSMS), under contract with Washington Savannah River Company (WSRC), subject to the warranty and other obligations of that contract and in furtherance of WSRC's contract with the United States Department of Energy (DOE).

Release to and Use by Third Parties. As it pertains to releases of this document to third parties, and the use of or reference to this document by such third parties in whole or in part, neither WSMS, WSRC, DOE, nor their respective officers, directors, employees, agents, consultants or personal services contractors (i) make any warranty, expressed or implied, (ii) assume any legal liability or responsibility for the accuracy, completeness, or usefulness, of any information, apparatus, product or process disclosed herein or (iii) represent that use of the same will not infringe privately owned rights. Reference herein to any specific commercial product, process, or service by trademark, name, manufacture or otherwise, does not necessarily constitute or imply endorsement, recommendation, or favoring of the same by WSMS, WSRC, DOE or their respective officers, directors, employees, agents, consultants or personal services contractors. The views and opinions of the authors expressed herein do not necessarily state or reflect those of the United States Government or any agency thereof.

CONTENTS

Page

13.0 HUMAN FACTORS 13.1-1

13.1 INTRODUCTION 13.1-1

13.2 REQUIREMENTS 13.2-1

13.2.1 Human-Machine Interface Requirements 13.2-1

13.2.2 Physical Work Environment 13.2-1

13.2.3 Organizational Considerations 13.2-1

13.3 HUMAN FACTORS PROCESS 13.3-1

13.4 IDENTIFICATION OF HUMAN-MACHINE INTERFACES 13.4-1

13.4.1 Monitoring Structures, Systems, and Components Performance 13.4-1

13.4.2 Response to Alarms 13.4-1

13.4.3 Emergency Response 13.4-2

13.5 DESIGN OPTIMIZATION OF HUMAN-MACHINE INTERFACES 13.5-1

13.6 REFERENCES 13.6-1

ACRONYMS

DOE	U. S. Department of Energy
HMI	Human-Machine Interface
S/RID	Standards/ Requirements Identification Document
SSC	Structure, System, and Component
WSB	Waste Solidification Building
WSRC	Washington Savannah River Company

13.0 HUMAN FACTORS

13.1 INTRODUCTION

This chapter describes the impact of human factors on the Waste Solidification Building (WSB). The mission, physical plant, and processes of the proposed WSB are described in Chapter 2 of this Preliminary Documented Safety Analysis. Human actions will be relied upon for certain controls and operations that affect the safety of the facility. Human actions that impact the safety of this facility include the following:

- Responding to high activity alarms for prompt evaluation
- Directing air flow
- Providing administrative controls for safe operation

The WSB systems addressed in this chapter have Safety Significant Structures, Systems, and Components (SSCs). There are no Safety Class SSCs identified. The safety-related SSCs in the WSB are identified and described in Chapter 4 of this document. The specific administrative controls are identified and described in Chapters 4 and 5 of this document.

13.2 REQUIREMENTS

The Standards/Requirements Identification Document (S/RID) (Ref. 1) specifies the codes, standards, and regulations governing the operational safety policies and elements of SRS human factors engineering activities (e.g., S/RID Functional Area 19). Programmatic compliance assessments are performed against the S/RID and documented as specified in the *Compliance Assurance Manual*, WSRC Procedure Manual 8B (Ref. 2). The Standards Management/Compliance Section maintains records of the programmatic compliance assessments.

All current design activities are required to follow the Washington Savannah River Company (WSRC) design standards (Ref. 3).

13.2.1 HUMAN-MACHINE INTERFACE REQUIREMENTS

Human-Machine Interface (HMI) Requirements will be applied to the WSB as stated in U. S. Department of Energy (DOE) Order 420.1B (Ref. 4). The HMI design requirements focus on system and component arrangement, displays, controls, alarms, labeling, communications, workspace layout, and equipment design. Company level procedures controlling equipment identification, operator aids, and procedures validation will be reviewed to ensure their applicability to this facility.

13.2.2 PHYSICAL WORK ENVIRONMENT

The WSB physical work environment will be designed to meet or exceed the lighting, noise, and ventilation requirements identified in DOE Order 420.1B (Ref. 4)

13.2.3 ORGANIZATIONAL CONSIDERATIONS

Organizational considerations include minimum staffing levels, allocations of controls functions, overtime restrictions, communications between shifts, procedures, and training.

DOE Order 5480.19, DOE Order 5480.20A, and Title 10, Code of Federal Regulations, Part 830, Subpart B (and associated implementing guide DOE G 423.1-1) define organizational requirements (Ref. 5, 6, 7, 8).

13.3 HUMAN FACTORS PROCESS

A human factors review of the preliminary safety-related SSCs was performed to develop this chapter. This review identified the HMI requirements that will be important in the design of these SSCs. Section 13.4 describes where those significant interfaces are in the various WSB system groups. Section 13.4 also specifies further human factors engineering input that must be provided in the detailed design engineering phase of the facility to ensure that applicable design requirements are fulfilled.

The SSCs were based on the WSB consolidated hazard analysis process report (Ref. 9).

The design guidelines for human factors engineering are listed in Appendix A to Reference 3, and these guidelines include NUREG-0700. The method of determining that the guidelines have been fulfilled in the design is described in the *SAR Human Factors Checklist* (Ref. 10). Those guidelines identified in Reference 5 will be used as requirements in the design process of HMI for the safety-related SSCs.

13.4 IDENTIFICATION OF HUMAN-MACHINE INTERFACES

Chapters 3 and 4 identify those facility SSCs that are designated as Safety Significant (no Safety Class SSCs were identified). Chapter 3 also outlines the required human actions necessary to prevent or mitigate the postulated accident scenarios.

The human actions can be categorized into the following types of actions:

- Monitoring of safety-related SSCs to ensure continued safe operations of the facilities
- Response to alarms or out-of-limit process parameters to stop a given activity, restore a system to operations, or take some other corrective action(s)
- Placing the facilities in a safe condition prior to or following a Natural Phenomena Hazard event

This section evaluates the HMI that must exist to complete the above type of actions.

13.4.1 MONITORING STRUCTURES, SYSTEMS, AND COMPONENTS PERFORMANCE

The accident analysis credits operators with ensuring that certain safety functions are being completed by monitoring the system performance. This is usually done by monitoring the system parameter of interest (e.g., purge flow rate). In the cases where the parameter is directly monitored, the operators are reading a simple gauge or digital display in the units of interest for comparison. The instrument uncertainty analysis for the Safety Significant instruments will include allowances for any reading uncertainties.

Operators have been trained in the techniques of reading each of the credited instruments or indications. The procedures used to monitor the equipment incorporate human factors engineering principles.

13.4.2 RESPONSE TO ALARMS

Operations is credited in Chapter 3 for responding to alarms or out-of-specification readings. The alarms that are credited are labeled to reflect the condition, include visual and audible indication, and have associated alarm response procedures in the control area where the alarm is located for directing operator responses to the alarm.

The credited responses are simple actions that the operators will be trained to complete. Examples of such actions are closing valves to isolate a siphon or transfer line, or operating a switch to de-energize a pump motor. In every instance there are multiple means of completing the given task and, as required, at least one means is credited.

13.4.3 EMERGENCY RESPONSE

Chapter 3 credits operators with responding appropriately in the event of a facility fire, tornado, or a leak/spill. These actions are necessary to reduce the exposure to the facility worker. Abnormal operating procedures or emergency operating procedures will direct these actions. The operators will be trained and drilled on a frequent basis sufficient to provide adequate confidence that these actions will be promptly completed as required.

13.5 DESIGN OPTIMIZATION OF HUMAN-MACHINE INTERFACES

The applications of human factors design guidelines in this section will be based on the safety-related SSCs functions described in Section 13.4. This section will be developed during final design.

13.6 REFERENCES

1. Standards/Requirements Identification Document. WSRC-RP-94-1268, Westinghouse Savannah River Company, Aiken, SC.

2. Compliance Assurance Manual. WSRC Procedure Manual 8B, Washington Savannah River Company, Aiken, SC.

3. SRS Engineering Standards Manual. WSRC-TM-95-1, Westinghouse Savannah River Company, Aiken, SC.

4. Facility Safety. DOE Order 420.1B, U.S. Department of Energy, Washington, DC, December 2005.

5. Conduct of Operations Requirements for DOE Facilities. DOE Order 5480.19, Change 2, U.S. Department of Energy, Washington, DC, October 2001.

6. Personnel Selection, Qualification, and Training Requirements for DOE Nuclear Facilities. DOE Order 5480.20A, Change 1, U.S. Department of Energy, Washington, DC, July 2001.

7. Nuclear Safety Management. Title 10, Code of Federal Regulations, Part 830, Subpart B, U.S. Nuclear Regulatory Commission, Washington, DC, January 2001.

8. Implementation Guide for Use in Developing Technical Safety Requirements. DOE G423.1-1, U.S. Department of Energy, Washington, DC, October 2001.

9. Consolidated Hazards Analysis for the Waste Solidification Building (WSB). WSRC-TR-2007-00134, Rev. 0, Westinghouse Savannah River Company, Aiken, SC, March 2008.

10. SAR Human Factors Checklists. WSRC-RP-95-460, Westinghouse Savannah River Company, Aiken, S.C., May 1995.

WSRC-SA-2002-00002
Rev. 0

WASTE SOLIDIFICATION BUILDING PRELIMINARY DOCUMENTED SAFETY ANALYSIS

CHAPTER 14

QUALITY ASSURANCE

JULY 2008

SAVANNAH RIVER SITE
Aiken, SC 29808 · www.srs.gov

PREPARED FOR THE U.S. DEPARTMENT OF ENERGY UNDER CONTRACT NO. DE-AC09SR18500

DISCLAIMER

This document was prepared by Washington Safety Management Solutions LLC (WSMS), under contract with Washington Savannah River Company (WSRC), subject to the warranty and other obligations of that contract and in furtherance of WSRC's contract with the United States Department of Energy (DOE).

Release to and Use by Third Parties. As it pertains to releases of this document to third parties, and the use of or reference to this document by such third parties in whole or in part, neither WSMS, WSRC, DOE, nor their respective officers, directors, employees, agents, consultants or personal services contractors (i) make any warranty, expressed or implied, (ii) assume any legal liability or responsibility for the accuracy, completeness, or usefulness, of any information, apparatus, product or process disclosed herein or (iii) represent that use of the same will not infringe privately owned rights. Reference herein to any specific commercial product, process, or service by trademark, name, manufacture or otherwise, does not necessarily constitute or imply endorsement, recommendation, or favoring of the same by WSMS, WSRC, DOE or their respective officers, directors, employees, agents, consultants or personal services contractors. The views and opinions of the authors expressed herein do not necessarily state or reflect those of the United States Government or any agency thereof.

CONTENTS

Page

14.0 QUALITY ASSURANCE 14.1-1

14.1 INTRODUCTION 14.1-1

14.1.1 Objective 14.1-1

14.1.2 Scope 14.1-1

14.2 REQUIREMENTS 14.2-1

14.3 QUALITY ASSURANCE PROGRAM AND ORGANIZATION 14.3-1

14.4 QUALITY IMPROVEMENT 14.4-1

14.4.1 Improvement Program 14.4-1

14.4.2 Corrective Action Program 14.4-1

14.5 DOCUMENTS AND RECORDS 14.5-1

14.6 QUALITY ASSURANCE PROGRAM PERFORMANCE 14.6-1

14.6.1 Work Processes 14.6-1

14.6.2 Design 14.6-1

14.6.3 Procurement 14.6-2

14.6.4 Inspection and Testing for Acceptance 14.6-3

14.6.4.1 Inspection 14.6-3

14.6.4.2 Acceptance Testing 14.6-3

14.6.4.3 Measuring and Test Equipment, Installed Process Instrumentation and Radiation Monitoring Equipment 14.6-3

CONTENTS (continued)

Page

14.6.5 Assessment 14.6-3

14.6.5.1 Management and Self-Assessment 14.6-3

14.6.5.2 Independent Assessment 14.6-4

14.7 REFERENCES 14.7-1

ACRONYMS

IPI	Installed Process Instrumentation
PDP	Plutonium Disposition Program
QA	Quality Assurance
QA&A	Quality Assurance and Assessment
S/RID	Standards/Requirements Identification Document
SRS	Savannah River Site
WSB	Waste Solidification Building
WSRC	Washington Savannah River Company

14.0 QUALITY ASSURANCE

14.1 INTRODUCTION

14.1.1 OBJECTIVE

The purpose of this chapter is to provide information on the Savannah River Site (SRS) Quality Assurance (QA) program and the QA program requirements that affect the safety of the Waste Solidification Building (WSB).

14.1.2 SCOPE

The Washington Savannah River Company (WSRC) QA program is described in the QA Management Plan, WSRC-RP-92-225 (Ref. 1) and is implemented through the QA Manual, WSRC Procedure Manual 1Q (Ref. 2). This chapter describes the implementation of the QA program and interfaces between the WSB and the site-level organizations and programs.

14.2 REQUIREMENTS

The Standards/Requirements Identification Document (S/RID) (Ref. 3) states the codes, standards, and regulations governing the QA policies and program elements at SRS (e.g., S/RID Functional Area 2). The programmatic compliance assessments are performed against the S/RIDs and documented as specified in WSRC Procedure Manual 8B (Ref. 4). The Standards Management/Compliance Section maintains records of the programmatic compliance assessments.

14.3 QUALITY ASSURANCE PROGRAM AND ORGANIZATION

The WSRC QA program is described in the QA Management Plan (Ref. 1) and is implemented through WSRC Procedure Manual 1Q (Ref. 2). The WSB will use WSRC Procedure Manual 1Q (Ref. 2) to implement the QA program. The following is a description of potential QA positions of authority and responsibilities. As the WSB organization becomes more definite, some of these positions may be merged or may become a part of an individual's responsibilities.

The Plutonium Disposition Program (PDP) Quality Assurance and Assessment (QA&A) manager will manage the direct support of the cognizant quality function for the WSB and will be responsible for providing independent oversight of the facility. In addition, the PDP QA&A Manager will be responsible for directing assessments of the adequacy of the QA program and for identifying any management problems that hinder the QA program from achieving its objectives.

The WSB quality engineering manager will report to the PDP QA&A manager and will be responsible for managing the quality engineering activities. The facility quality engineers will report to the WSB quality engineering manager and serve as the primary QA interface with the facility and provide a focal point for QA activities in the facility. The facility quality engineers will also perform oversight of activities. Responsibilities will include reviewing and approving selected operating procedures that involve quality-related activities, as well as the procurement of Level 1 items and services and Level 2 purchase documents. The facility quality engineers will serve as the cognizant quality function for the facility, assuring that appropriate QA program measures are established, implemented, and maintained, as well as assuring that activities affecting quality have been performed correctly and in an adequate and effective manner. The facility quality engineers will serve as the QA representative to the facility operations safety committee as specified in the *Management Requirements and Procedures*, WSRC Procedure Manual 1B (Ref. 5).

The PDP QA&A manager will be responsible for managing the WSB corrective action program. The WSB corrective action group will implement the WSB corrective action program in accordance with *Management Policies*, WSRC Procedure Manual 1-01 (Ref. 6), and either perform or provide oversight of the assignment of significant determinations, causal code/root cause analysis, and corrective action activities. The PDP Corrective Action group will have the responsibility for the PDP master tracking system and will implement the WSB self-evaluation program in accordance with the *Assessment Manual*, WSRC Procedure Manual 12Q (Ref. 7).

The PDP QA&A manager will be responsible for managing the independent mechanical, electrical, instrumentation, and control inspectors in the facility. The PDP QA&A manager will also be responsible for implementing and documenting, through inspection planning and procedure or work document reviews, any necessary quality inspection witness and hold points.

The quality department will apply the QA graded approach for projects, activities, and items under its control. The graded approach functionally classifies projects, activities, and items as follows:

- Safety Class and Safety Significant: A full QA program is applied.

- Production support: The QA controls applied to production support structures, systems, and components will be applied in a graded approach based on risk, safety, and reliability.
- General service: The QA controls applied to general service structures, systems, and components will be minimal; however, controls may be applied in a graded approach based upon risk, safety, and reliability to the extent necessary to establish a desired level of QA.

WSRC Procedure Manual 1Q (Ref. 2) and the WSRC *QA Training Program Plan*, WSRC-IM-94-032 (Ref. 8), delineate the indoctrination, training, and on-the-job training requirements necessary for certification as independent inspectors within the WSB QA&A department.

14.4 QUALITY IMPROVEMENT

14.4.1 IMPROVEMENT PROGRAM

The WSB will implement the quality improvement program through direct use of WSRC Procedure Manual 1Q (Ref. 2).

14.4.2 CORRECTIVE ACTION PROGRAM

WSRC Procedure Manuals 1Q and 1B (Ref. 2, 5) establish the processes to detect, prevent, and correct quality problems. The WSB will implement the corrective action program in accordance with the requirements of WSRC Procedure Manual 1-01 (Ref. 6).

14.5 DOCUMENTS AND RECORDS

The QA documents and records will be generated, issued, maintained, stored and disposed in accordance with the requirements of WSRC Procedure Manual 1Q (Ref. 2).

14.6 QUALITY ASSURANCE PROGRAM PERFORMANCE

14.6.1 WORK PROCESSES

Work will be performed to established technical standards and administrative controls using approved instructions, procedures, or other appropriate means. Work control programs will be implemented for the management of work at the WSB to ensure compliance with applicable engineering, health, safety, environmental, security, quality standards, and technical requirements. These programs will require line organizations and personnel performing work to be responsible for the quality of their work. This will be achieved by providing people with the necessary training and maintenance of their qualifications for the job for which they are responsible. This training will provide the necessary knowledge of requirements for the work they perform and the capabilities of the tools and processes they use.

A graded approach will be used to apply QA requirements to work processes. These requirements will be based on risk, safety, reliability, complexity, environmental and safety consequences, and programmatic effects. Use of the graded approach will be by the selective application of QA program elements based on required administrative controls. WSRC Procedure Manual 1Q (Ref. 2), *Conduct of Operations Manual*, WSRC Procedure Manual 2S (Ref. 9), and *Conduct of Maintenance*, WSRC Procedure Manual 1Y (Ref. 10) provide the requirements and details of the work control program.

Additionally, the following work process elements will be implemented at WSB in accordance with WSRC Procedure Manual 1Q (Ref. 2):

- Identification and control of items
- Handling, storing, and shipping
- Calibration and maintenance of Installed Process Instrumentation (IPI)
- Control of computer software
- Instructions, procedures, and drawings

14.6.2 DESIGN

WSRC Procedure Manual 1Q (Ref. 2) provides the SRS requirements for design control. In addition, WSRC Procedure Manual E7 (Ref. 11) discusses the performance and control of SRS design, including design requirements, inputs, processes, outputs, changes, records, and organizational interfaces.

The SRS design program includes the following topics:

- Design control
- Design change control

- Temporary modifications
- Design interfaces
- Design records
- Design verification
- Software design control

WSB engineering will use WSRC Procedure Manuals 1Q and E7 (Ref. 2, 11) to implement design control. The design authority will ensure that the applicable design requirements for Safety Class and Safety Significant structures, systems, and components and any non-compliances are identified and justified in accordance with the requirements of WSRC Procedure Manuals 1Q and E7 (Ref. 2, 11).

14.6.3 PROCUREMENT

SRS procurement program includes the following:

- Procurement program definition (including procurement document control)
- Supplier selection and evaluation (through in-plant audits, assessments, etc.)
- Product acceptance (by verification, surveillance, audit, and inspection)

WSRC Procedure Manual 1Q (Ref. 2) delineates the SRS requirements for procurement document control, control of purchased items and services, QA surveillance, and QA external audits. In addition, WSRC Procedure Manual 7B (Ref. 12) provides guidelines regarding the preparation, review, and approval of procurement documents. The WSB will use WSRC Procedure Manual 1Q (Ref. 2) on the above-listed procurement-related matters.

The WSB will use WSRC Procedure Manual 7B (Ref. 12) for procurement document control, including the preparation, review, approval, and control of purchase requisitions. For controlling purchased items and services, the WSB will use Procedure 7-2 of WSRC Procedure Manual 1Q (Ref. 2). This procedure uses the graded approach to establish procurement levels according to the functional classification of the item or service and other considerations including risk, complexity, and mission. The procedure also discusses product acceptance, including source inspection, receipt inspection, and post-delivery testing. The procedure also provides for the establishment and maintenance of a qualified supplier list that identifies suppliers and the commodities or services for which they are qualified.

For replacement item evaluation, commercial grade item dedication and material upgrade, the WSB will follow the requirements of WSRC Procedure Manuals 1Q and E7 (Ref. 2, 11).

14.6.4 INSPECTION AND TESTING FOR ACCEPTANCE

14.6.4.1 Inspection

WSRC Procedure Manual 1Q (Ref. 2) defines the SRS requirements for inspection, inspection status, and control of nonconforming items. The WSB will follow WSRC Procedure Manual 1Q (Ref. 2) to implement all activities related to QA inspections.

14.6.4.2 Acceptance Testing

Acceptance testing involves demonstrating that items and processes perform as intended.

WSRC Procedure Manual 1Q (Ref. 2) delineates the SRS requirements for test control, test status, control of nonconforming items, and corrective action system. The WSB will implement the requirements of WSRC Procedure Manual 1Q (Ref. 2) for acceptance testing. The acceptance test program is discussed further in Chapter 10 of this Preliminary Documented Safety Analysis.

14.6.4.3 Measuring and Test Equipment, Installed Process Instrumentation and Radiation Monitoring Equipment

WSRC Procedure Manual 1Q (Ref. 2) provides the SRS requirements for the control of measuring and test equipment, radiation monitoring equipment, and IPI. The WSB will use WSRC Procedure Manual 1Q (Ref. 2) to implement the measuring and test equipment, IPI, and radiation monitoring equipment programs.

14.6.5 ASSESSMENT

14.6.5.1 Management and Self-Assessment

WSRC Procedure Manual 1Q (Ref. 2) provides the SRS requirements for assessment of the management processes to identify quality improvement opportunities. In addition, WSRC Procedure Manual 1B (Ref. 5) provides guidelines for identifying management improvement opportunities.

The WSB will follow the management overview program described in WSRC Procedure Manual 2S (Ref. 9), which requires self-assessments at the facility level to ensure that key attributes of the conduct of operations training and maintenance are implemented. In addition, the WSB will follow the self-assessment process described in WSRC Procedure Manuals 1Q, 1B, and 12Q (Ref. 2, 5, 7).

14.6.5.2 Independent Assessment

The WSRC facility evaluation board has been established by the Environmental, Safety, and Health Division to measure the effectiveness of the WSRC facility and related environmental, safety, health, and QA programmatic performance. This program provides the WSRC facility and senior management with performance-based information and satisfies the WSRC contractual obligations for company-level independent oversight. WSRC Procedure Manual 12Q (Ref. 7) defines the structure, principles, responsibilities, associated requirements, and procedures for conducting WSRC independent assessments through the facility evaluation board program.

14.7 REFERENCES

1. Quality Assurance Management Plan. WSRC-RP-92-225, Rev. 20, Washington Savannah River Company, Aiken, SC, January 2008.

2. Quality Assurance Manual. WSRC Procedure Manual 1Q, Washington Savannah River Company, Aiken, SC.

3. Standards/Requirements Identification Document. WSRC-RP-94-1268, Washington Savannah River Company, Aiken, SC.

4. Compliance Assurance Manual. WSRC Procedure Manual 8B, Washington Savannah River Company, Aiken, SC.

5. Management Requirements and Procedures. WSRC Procedure Manual 1B, Washington Savannah River Company, Aiken, SC.

6. Management Policies. WSRC Procedure Manual 1-01, Washington Savannah River Company, Aiken, SC.

7. Assessment Manual. WSRC Procedure Manual 12Q, Washington Savannah River Company, Aiken, SC.

8. WSRC QA Training Program Plan. WSRC-IM-94-032, Washington Savannah River Company, Aiken, SC.

9. Conduct of Operations Manual. WSRC Procedure Manual 2S, Washington Savannah River Company, Aiken, SC.

10. Conduct of Maintenance. WSRC Procedure Manual 1Y, Washington Savannah River Company, Aiken, SC.

11. Conduct of Engineering and Technical Support. WSRC Procedure Manual E7, Washington Savannah River Company, Aiken, SC.

12. Procurement Management Manual. WSRC Procedure Manual 7B, Washington Savannah River Company, Aiken, SC.

WSRC-SA-2003-00002
Rev. 0

WASTE SOLIDIFICATION BUILDING PRELIMINARY DOCUMENTED SAFETY ANALYSIS

CHAPTER 15

EMERGENCY PREPAREDNESS PROGRAM

JULY 2008

SAVANNAH RIVER SITE
Aiken, SC 29808 · www.srs.gov

PREPARED FOR THE U.S. DEPARTMENT OF ENERGY UNDER CONTRACT NO. DE-AC09SR18500

DISCLAIMER

This document was prepared by Washington Safety Management Solutions LLC (WSMS), under contract with Washington Savannah River Company (WSRC), subject to the warranty and other obligations of that contract and in furtherance of WSRC's contract with the United States Department of Energy (DOE).

Release to and Use by Third Parties. As it pertains to releases of this document to third parties, and the use of or reference to this document by such third parties in whole or in part, neither WSMS, WSRC, DOE, nor their respective officers, directors, employees, agents, consultants or personal services contractors (i) make any warranty, expressed or implied, (ii) assume any legal liability or responsibility for the accuracy, completeness, or usefulness, of any information, apparatus, product or process disclosed herein or (iii) represent that use of the same will not infringe privately owned rights. Reference herein to any specific commercial product, process, or service by trademark, name, manufacture or otherwise, does not necessarily constitute or imply endorsement, recommendation, or favoring of the same by WSMS, WSRC, DOE or their respective officers, directors, employees, agents, consultants or personal services contractors. The views and opinions of the authors expressed herein do not necessarily state or reflect those of the United States Government or any agency thereof.

CONTENTS

Page

15.0 EMERGENCY PREPAREDNESS 15.1-1

15.1 INTRODUCTION 15.1-1

15.1.1 Objective 15.1-1

15.1.2 Scope 15.1-1

15.2 REQUIREMENTS 15.2-1

15.3 SCOPE OF EMERGENCY PREPAREDNESS PROGRAM 15.3-1

15.3.1 Natural Phenomena Hazards 15.3-1

15.3.2 Fires 15.3-1

15.3.3 Operational Emergencies 15.3-1

15.3.4 External Events 15.3-1

15.4 EMERGENCY PREPAREDNESS PLANNING 15.4-1

15.4.1 Emergency Response Organization 15.4-1

15.4.1.1 Normal Organization 15.4-1

15.4.1.2 Facility Emergency Response Organization 15.4-1

15.4.2 Assessment Actions 15.4-2

15.4.2.1 Classification System 15.4-2

15.4.2.2 Classification Responsibilities 15.4-2

15.4.3 Notification 15.4-2

15.4.3.1 Incident Facility 15.4-3

CONTENTS (continued)

Page

15.4.4 Emergency Facilities And Equipment 15.4-3

15.4.4.1 Emergency Facilities 15.4-3

15.4.4.2 Emergency Equipment 15.4-4

15.4.5 Protective Actions 15.4-5

15.4.6 Training and Exercises 15.4-6

15.4.6.1 Training 15.4-6

15.4.6.2 Drills and Exercises 15.4-6

15.4.7 Recovery and Reentry 15.4-6

15.4.7.1 Reentry 15.4-6

15.4.7.2 Recovery 15.4-6

15.5 REFERENCES 15.5-1

ACRONYMS

DOE	U.S. Department of Energy
EAL	Emergency Action Level
EOC	Emergency Operations Center
EP	Emergency Preparedness
ERO	Emergency Response Organization
FEC	Facility Emergency Coordinator
OSC	Operations Support Center
PDSA	Preliminary Documented Safety Analysis
SRS	Savannah River Site
WSB	Waste Solidification Building
WSI	Wackenhut Services Incorporated
WSRC	Washington Savannah River Company

15.0 EMERGENCY PREPAREDNESS

15.1 INTRODUCTION

15.1.1 OBJECTIVE

This chapter provides information on the Savannah River Site (SRS) Emergency Preparedness (EP) program that implements the proper responses to emergency conditions and the program requirements that govern emergency response in the Waste Solidification Building (WSB).

15.1.2 SCOPE

This chapter describes the EP program for the WSB and its relationship to the SRS commitment to the applicable U.S. Department of Energy (DOE) Orders and philosophy, objectives, and organization of the EP program.

When required, information is provided in another chapter of this Preliminary Documented Safety Analysis (PDSA), that chapter is referenced to limit repetition. In those cases where policies, programs, and practices important to the safe operation are described in detail in other site documents, the salient features are summarized for inclusion in this chapter and the documents are referenced.

The *SRS Emergency Plan*, Washington Savannah River Company (WSRC)-SCD-7 (Ref. 1), describes the SRS and division level EP programs. This chapter describes the interfaces between the WSB and the site- and division-level organizations and programs.

15.2 REQUIREMENTS

The Standards/Requirements Information Document (Ref. 2) states the codes, standards, and regulations governing the EP policies and program elements at SRS (e.g., Functional Area 5). The programmatic compliance assessments are performed against the Standards/Requirements Identification Document and documented as specified in the *Compliance Assurance Manual*, WSRC Procedure Manual 8B (Ref. 3). The Standards Management/Compliance Section maintains records of the programmatic compliance assessments.

15.3 SCOPE OF EMERGENCY PREPAREDNESS PROGRAM

The WSB facility's emergency plan is concerned with individual and organizational responses to a range of potential accidents, including hypothetical accidents with very low occurrence frequencies. The following sections summarize accidents that can result in a release of significant amounts of radioactive and/or other hazardous material.

15.3.1 NATURAL PHENOMENA HAZARDS

Natural phenomena hazards include tornadoes and earthquakes. For more information, see Chapter 3 of this PDSA. Possible complicating factors of a severe natural emergency include, but are not limited to, the disruption of power, telephone, gas, water, and steam lines. The destruction of roads, buildings, equipment, and vehicles can hamper response and recovery operations. Refer to Chapter 3 of this document and to WSRC-SCD-7 (Ref. 1) for more specific information regarding the complications and consequences of natural phenomena emergencies.

15.3.2 FIRES

Refer to Chapter 3 of this document and to WSRC-SCD-7 (Ref. 1) for more specific information regarding causes, complicating factors, and consequences of fires.

15.3.3 OPERATIONAL EMERGENCIES

Operational emergencies include operating events (e.g., process control transients or equipment failures) that result in the release of radioactive material. Accidents can result in the release of airborne activity, total loss of ventilation, air reversals, and damage to surrounding areas. Refer to Chapter 3 of this document and to WSRC-SCD-7 (Ref. 1) for more specific information regarding the causes, complications, and consequences of operational emergencies.

15.3.4 EXTERNAL EVENTS

External events include excavation in an inappropriate area, vehicle impact hazards, or aircraft crash. Refer to Chapter 3 of this document and to WSRC-SCD-7 (Ref. 1) for more specific information regarding the causes, complications, and consequences of external events.

15.4 EMERGENCY PREPAREDNESS PLANNING

15.4.1 EMERGENCY RESPONSE ORGANIZATION

15.4.1.1 Normal Organization

Chapter 17 of this PDSA describes the operating organization for the WSB. The on-shift staff will provide the initial Emergency Response Organization (ERO). Personnel from non-incident facilities will supplement this organization, as needed.

During an emergency event, the shift manager will be the designated Facility Emergency Coordinator (FEC) and has emergency responsibility for the WSB.

Upon detection of an abnormality in the WSB, the control room will be notified immediately. The shift manager will review the situation and, if the event parameters meet or exceed the Emergency Action Level (EAL) limits, will determine the appropriate emergency classification and will assume the responsibilities of the FEC. The FEC will notify the F-Area emergency coordinator and the emergency duty officer of the event and the emergency classification. Using the WSB emergency plan implementing procedures, the FEC will activate the control room at a notification of unusual event or higher classification and the Operations Support Center (OSC) at an Alert or higher classification. The first-line supervisor or designee on shift will become the incident scene coordinator when an emergency is declared. The maintenance supervisor or designee will be the OSC Coordinator. The radiological control supervisor on shift in the WSB will assume the duties of the radiological control coordinator. The Wackenhut Services, Inc. (WSI)-SRS lieutenant will assume the duties and responsibilities for the protective force supervision and security response during an area emergency. During non-security-related emergencies, the WSI-SRS sergeant normally will report to the incident facility OSC to provide liaison between WSI-SRS and the FEC.

15.4.1.2 Facility Emergency Response Organization

Personnel on shift in the incident facility will comprise the initial facility ERO. In addition to the FEC, the ERO will consist of the OSC coordinator; the radiological control coordinators, the accountability coordinator, the rally point coordinator, and the emergency response teams consisting of Operations, radiological control operations, and maintenance shift personnel, augmented with personnel from non-incident facilities, as required. The OSC coordinator will be the ranking maintenance supervisor on shift and the incident facility's radiological control supervisor will act as the radiological control coordinator for the command post. The non-incident facility radiological control supervisor will serve as the radiological control coordinator for the OSC (Ref. 1).

The site ERO staff and their responsibilities are detailed in the *SRS Emergency Plan* (Ref. 1).

15.4.2 ASSESSMENT ACTIONS

This section identifies the emergency classification system used at SRS and relates the classification system to the emergencies arising from the accidents and natural disasters analyzed in Chapter 3 of this document. The emergency classification system is covered in the SRS Emergency Plan (Ref. 1). Source terms and release rates are specific to WSB facility. Releases and plumes are evaluated based on estimated source terms and wind dispersions versus bounding values described in Chapter 3 of this document.

15.4.2.1 Classification System

The emergency classification system is designed to classify an emergency condition promptly into levels commonly understood by both onsite and offsite officials, using EAL criteria to provide for a graded response.

The emergency classification process given in the *SRS Emergency Plan* (Ref. 1) provides guidance for emergency classification for all facilities in the WSB. A three-category EAL Matrix will be used for determining the appropriate emergency classification, based on whether the incident involves a radioactive release, chemical release, or other type of emergency (e.g., fire). For the WSB, no chemicals will be used or stored in quantities or concentrations that will exceed Emergency Response Planning Guidelines for the emergency condition(s). Therefore, no EALs will be established for chemical releases.

15.4.2.2 Classification Responsibilities

Classification responsibilities for operational emergencies cannot be delegated. The WSB FEC will initially be responsible for classifying emergencies (e.g., Alert, Site Area, or General) that occur within the WSB. Once the Emergency Operations Center (EOC) is activated, the emergency director will be responsible for any changes in the classification of emergencies within the facility. The FEC will continue to evaluate and recommend changes in classification to the technical support room coordinator, who will provide that information to the emergency director, as appropriate. While the EOC is operational, the emergency director will declare all emergency classifications. The senior law enforcement division supervisor on duty will be responsible for security phase declarations.

Terminating emergencies from an Alert or higher level will require approval from the emergency director. State and local response actions will be based upon this same emergency classification system.

15.4.3 NOTIFICATION

This section provides information on the notification processes and the communication systems used if there is an emergency at SRS. The notification/communication process has been prearranged and/or standardized to reduce any confusion during an emergency. This process and

the follow-up notification process, as well as the integration of public information in the emergency, are specified in the *SRS Emergency Plan* (Ref. 1).

15.4.3.1 Incident Facility

People in the WSB facility will be notified of emergency conditions through alarms and/or public address announcements. The SRS safety alarm system will be the primary means for notifying personnel within the incident area.

The FEC will be responsible for notifying emergency response personnel in the control room and the OSC and for notifying all non-essential personnel. These notifications will be accomplished through radios, public address announcements, telephones, and personal contact.

15.4.4 EMERGENCY FACILITIES AND EQUIPMENT

Area-specific attributes of the SRS emergency response plan are described in annexes of WSRC-SCD-7 (Ref. 1). The F-Area annex (Annex C) describes the attributes that will be applicable to the WSB. If necessary, the F-Area annex will be revised to capture changes due to the operation of the WSB.

15.4.4.1 Emergency Facilities

Centralized emergency support facilities, such as the SRS operations center (manned at all times) and the EOC (manned during an emergency classification of Alert or higher) are discussed in WSRC-SCD-7 (Ref. 1). Other emergency facilities and equipment relevant to F Area are described in Chapter C.11 of Reference 1. If necessary, this chapter will be revised prior to the startup of the WSB to include additional F-Area emergency facilities (e.g., the WSB central control room).

DECONTAMINATION FACILITIES

The F-Area personnel decontamination facilities are described in Subsection C.11.1.4 of the F-Area annex in WSRC-SCD-7 (Ref. 1).

MEDICAL FACILITIES

Medical Facilities are available seven days/24 hours onsite. These facilities are described in Chapter 8 of WSRC-SCD-7 (Ref.1).

SECURITY FACILITIES

The WSB has the capability to communicate with all protective force personnel posts, facility control rooms, and the SRS operations center (Ref. 1).

15.4.4.2 Emergency Equipment

COMMUNICATIONS EQUIPMENT

Subsection C.11.2.1 of the F-Area annex in WSRC-SCD-7 (Ref. 1) contains a description of communications equipment available at F Area for use in an emergency response.

HEAVY CONSTRUCTION EQUIPMENT

Heavy construction equipment is available via the ERO organization once it is activated.

RESCUE/FIRST AID TEAM EQUIPMENT

Rescue Team

Dedicated equipment is maintained by the SRS fire department for use by its rescue teams. This equipment is described in WSRC-SCD-7 (Ref. 1) and the *Fire Protection Program*, WSRC Procedure Manual 2Q (Ref. 4).

First Aid Team

Equipment cabinet locations and inventory frequencies will be listed in the WSB EP administrative procedures.

SANITATION EQUIPMENT

Portable sanitation facilities are available from existing site resources. These would be requested by the FEC, as needed.

TRANSPORTATION EQUIPMENT

Transportation equipment includes vans with various passenger capacities and buses provided by existing site resources.

PERSONAL PROTECTION EQUIPMENT

Subsection C.11.2.8 of the F-Area annex in WSRC-SCD-7 (Ref. 1) specifies locations of personal protection equipment for use in emergency situations.

HAZARDOUS MATERIAL DETECTION AND MONITORING

Chapter C.6 of the F-Area annex in WSRC-SCD-7 (Ref. 1) describes equipment and instrumentation available at the facility as part of the employee safety, Radiological Protection, and Industrial Hygiene Programs.

DAMAGE CONTAINMENT EQUIPMENT

Damage containment equipment and supplies (i.e., sandbags, booms, and shielding materials) will be available from existing site resources. Requests will be routed through the emergency duty officer or EOC.

FIRE FIGHTING EQUIPMENT

Specific information on fire fighting equipment is given in the WSRC Procedure Manual 2Q (Ref. 4).

EMERGENCY POWER EQUIPMENT

Specific information on available emergency power equipment is given in Subsection C.11.2.12 of the F-Area annex in WSRC-SCD-7 (Ref. 1).

LOGISTIC SUPPORT EQUIPMENT

Specific information on available logistic support equipment is given in Subsection C.11.2.13 of the F-Area annex in WSRC-SCD-7 (Ref. 1).

15.4.5 PROTECTIVE ACTIONS

For hazardous material and radiological emergencies, protective actions are designed to keep onsite and offsite exposures as low as possible. This is accomplished by minimizing time spent in the vicinity of the hazard, keeping as far from the hazard as possible, and taking advantage of available shelter.

For emergencies related to safeguards and security events, protective actions are designed to provide maximum physical safety of onsite personnel (safe havens) while maintaining operational and security integrity of site facilities.

Site-level protective actions are described in WSRC-SCD-7 (Ref. 1). Protective actions specific to F Area are described in Chapter C.7 of Annex C in the WSRC-SCD-7 (Ref. 1).

15.4.6 TRAINING AND EXERCISES

15.4.6.1 Training

Section 12 and facility annexes of the *SRS Emergency Plan* (Ref.1) establish and describe the emergency management training program, including initial and annual retraining for all facility emergency response personnel.

Emergency training requirements applicable to WSB are described in Chapter C.12 of the F-Area annex in WSRC-SCD-7 (Ref. 1).

15.4.6.2 Drills and Exercises

All ERO members in the WSB will be required to participate in an emergency drill annually. The drills are designed to test/maintain proficiency in distinct areas of emergency response (i.e., notification, classifications, communications, fire protection, first aid response, hazardous material response, etc.). The drill and exercise program is described in Section 13 of the *SRS Emergency Plan* (Ref. 1). The emergency training program will be conducted in accordance with the requirements of the SRS site level training program in WSRC Procedure Manual 1Q (Ref. 5).

15.4.7 RECOVERY AND REENTRY

The operating contractor (WSRC) and security contractor (WSI-SRS) are responsible for planning and implementing recovery activities at SRS, following the termination of the emergency (Ref. 1). The DOE-Savannah River Office is responsible for ensuring the adequacy and appropriateness of recovery operations.

15.4.7.1 Reentry

Reentry may be performed during an emergency to rescue personnel, secure critical equipment, assess the accident, and perform initial mitigation. Chapter 9 and Chapter C.9 of the F-Area Annex in WSRC-SCD-7 (Ref. 1) describe the provisions for the recovery from an operational emergency and planned reentry provisions for WSB.

15.4.7.2 Recovery

Recovery from an event includes those actions necessary to restore an incident site and surrounding environments to pre-emergency or safe conditions. The *SRS Emergency Plan* (Ref. 1) describes the process for establishing a recovery organization and describes how the site and the affected facility will transition from an emergency response organization to a recovery organization (Ref. 1).

RESUMPTION OF NORMAL OPERATIONS

Compliance with the WSB Technical Safety Requirements will be necessary to terminate recovery operations. DOE-Savannah River Office approval will be required before normal operations can be resumed. A final briefing of all recovery organization personnel will be held to discuss the resumption of normal operations and procedural requirements for the final reports on recovery operations. All documentation of recovery operations will be collected and processed for storage in accordance with WSRC Procedure Manual 1Q (Ref. 5).

15.5 REFERENCES

1. Savannah River Site Emergency Plan. WSRC-SCD-7, Washington Savannah River Company, Savannah River Site, Aiken, SC.

2. Standards/Requirements Identification Document. WSRC-RP-94-1268, Washington Savannah River Company, Aiken, SC.

3. Compliance Assurance Manual. WSRC Procedure Manual 8B, Washington Savannah River Company, Aiken, SC.

4. Fire Protection Program. WSRC Procedure Manual 2Q, Washington Savannah River Company, Aiken, SC.

5. Quality Assurance Manual. WSRC Procedure Manual 1Q, Washington Savannah River Company, Aiken, SC.

WSRC-SA-2003-00002
Rev. 0

WASTE SOLIDIFICATION BUILDING PRELIMINARY DOCUMENTED SAFETY ANALYSIS

CHAPTER 16

PROVISIONS FOR DECONTAMINATION AND DECOMMISSIONING

JULY 2008

SAVANNAH RIVER SITE
Aiken, SC 29808 · www.srs.gov

PREPARED FOR THE U.S. DEPARTMENT OF ENERGY UNDER CONTRACT NO. DE-AC09SR18500

DISCLAIMER

This document was prepared by Washington Safety Management Solutions LLC (WSMS), under contract with Washington Savannah River Company (WSRC), subject to the warranty and other obligations of that contract and in furtherance of WSRC's contract with the United States Department of Energy (DOE).

Release to and Use by Third Parties. As it pertains to releases of this document to third parties, and the use of or reference to this document by such third parties in whole or in part, neither WSMS, WSRC, DOE, nor their respective officers, directors, employees, agents, consultants or personal services contractors (i) make any warranty, expressed or implied, (ii) assume any legal liability or responsibility for the accuracy, completeness, or usefulness, of any information, apparatus, product or process disclosed herein or (iii) represent that use of the same will not infringe privately owned rights. Reference herein to any specific commercial product, process, or service by trademark, name, manufacture or otherwise, does not necessarily constitute or imply endorsement, recommendation, or favoring of the same by WSMS, WSRC, DOE or their respective officers, directors, employees, agents, consultants or personal services contractors. The views and opinions of the authors expressed herein do not necessarily state or reflect those of the United States Government or any agency thereof.

CONTENTS

Page

16.0 PROVISIONS FOR DECONTAMINATION AND DECOMMISSIONING 16.1-1

16.1 INTRODUCTION 16.1-1

16.1.1 Objective 16.1-1

16.1.2 Scope 16.1-1

16.2 REQUIREMENTS 16.2-1

16.3 DECONTAMINATION AND DECOMMISSIONING 16.3-1

16.3.1 Design Features 16.3-1

16.3.2 Operational Considerations 16.3-2

16.3.3 Conceptual Decontamination and Decommissioning Plan 16.3-2

16.4 REFERENCES 16.4-1

ACRONYMS

D&D	Decontamination and Decommissioning
S/RID	Standards/Requirements Identification Document
SSC	Structure, System, and Component
WSB	Waste Solidification Building
WSRC	Washington Savannah River Company

16.0 PROVISIONS FOR DECONTAMINATION AND DECOMMISSIONING

16.1 INTRODUCTION

16.1.1 OBJECTIVE

This chapter provides information relating to the Decontamination and Decommissioning (D&D) of the Waste Solidification Building (WSB) Structures, Systems, and Components (SSCs). This chapter lists design features in the WSB that facilitate D&D and operational considerations that permit the D&D processes to be completed.

16.1.2 SCOPE

This chapter describes the development, verification, and approval of the plans and processes for closure and D&D of the WSB SSCs (e.g., evaporators, pumps, and transfer lines), using a graded approach and describes the conceptual D&D planning process. This chapter also describes how D&D activities associated with major modifications in the WSB will be planned and executed.

16.2 REQUIREMENTS

The Standards/Requirements Information Document (S/RID) states the codes, standards, and regulations governing D&D activities and program elements for the programs and procedures that implement D&D activities (e.g., S/RID Functional Area 15 and Functional Area 16) (Ref. 1). Programmatic compliance assessments are performed against the S/RID and documented as specified in *Compliance Assurance Manual*, Washington Savannah River Company (WSRC) Procedure Manual 8B (Ref. 2). The Standards Management/Compliance Section maintains records of the programmatic compliance assessments.

16.3 DECONTAMINATION AND DECOMMISSIONING

In accordance with the facility design description, planning for D&D of the WSB is part of the design of the facility (Ref. 3). A formal D&D plan will be developed before WSB closure begins. The decommissioning plan will be developed to comply with applicable federal and State of South Carolina requirements and regulations, as well as to provide information relevant to decommissioning project planning. Any changes in the mission of the WSB will be evaluated relative to design and administrative features for facilitating D&D activities.

D&D operations will be conducted in a manner that will minimize waste generation and potential worker exposure. The D&D project organization will designate a facility custodian responsible for the following (Ref. 4):

- Reducing potential hazards to the public and environment
- Meeting applicable standards for radiation protection, hazardous chemical exposure, and safety
- Maintaining security and physical safety
- Ensuring adequate surveillance and maintenance
- Reporting occurrences
- Decommissioning

Waste generated during decontamination activities will be managed by existing administrative and operational practices and procedures for handling radioactive and hazardous wastes at the WSB, as addressed in Chapter 9 of this Preliminary Documented Safety Analysis.

16.3.1 DESIGN FEATURES

Design of the WSB facilities incorporates the following features that will facilitate decontamination and decommissioning:

- Process Equipment — Equipment that constitutes a risk to health and safety will be enclosed in concrete structures.
- Ventilation — Ventilation of operating and processing areas will minimize the contamination of surfaces by airborne contaminants because the ventilation flow will be from the less contaminated areas to the more-highly-contaminated areas. All contaminated exhausts will be routed through high-efficiency particulate air filters prior to atmospheric release.
- Flushing — Methods will be available for equipment flushing, drainage, decontamination, and removal from the facility.
- Handling — The WSB will contain areas that can be used for decontamination purposes.
- Liners —The high activity waste process room sections contain a stainless steel liner to facilitate decontamination in the event of a spill.

- Provisions for decontamination — Equipment is designed to minimize areas where contaminated materials could accumulate. For example, piping systems are designed to be fully drained. Field installation of temporary containment huts is a technique that can be used to contain contamination and facilitate disassembly or packaging.

16.3.2 OPERATIONAL CONSIDERATIONS

The Radiological Protection Program, described in Chapter 7 of this Preliminary Documented Safety Analysis, will minimize contamination of the WSB. This program will ensure that radiological operations of the facilities are conducted in accordance with site and division policies and procedures. Control of radioactive contamination will be achieved by means of engineering and administrative controls, worker actions to contain contamination at the source, reducing existing areas of contamination, and promptly decontaminating areas that become contaminated.

A technical review of the design changes, performed per the *Conduct of Engineering and Technical Support*, WSRC Procedure Manual E7 (Ref. 4), will ensure that modifications to the WSB are consistent with site and division D&D policies and procedures. The technical review will ensure that modifications to the WSB are reviewed and evaluated for waste minimization and as low as reasonably achievable considerations. During operation and design modifications, these programs will minimize the potential for the spread of contamination that would complicate or reduce the effectiveness of future D&D or environmental restoration activities.

16.3.3 CONCEPTUAL DECONTAMINATION AND DECOMMISSIONING PLAN

WSRC Procedure Manual 1-01, *Management Policies,* Procedure 5.24, “Facility Disposition” (Ref. 5), sets forth the policy for the disposition of the WSB facility and large structures (evaporators, vessels, and pumps). The disposition of designated excess facilities and associated equipment will be conducted in accordance with the S/RID, applicable U.S. Department of Energy Orders (Ref. 6), and supplemental manuals as listed in the references. The related activities will be performed in a cost-effective manner through systematic planning, scheduling, execution, evaluation, and documentation to ensure the health and safety of the worker, the public, and the environment.

Facility Disposition, WSRC Procedure Manual 1C (Ref. 7), provides the details of the facility disposition program. Planning and executing the disposition of excess facilities and/or associated equipment will be conducted using project management principles with a graded approach.

16.4 REFERENCES

1. Standards/Requirements Identification Document. WSRC-RP-94-1268, Washington Savannah River Company, Aiken, SC.

2. Compliance Assurance Manual. WSRC Procedure Manual 8B, Washington Savannah River Company, Aiken, SC.

3. Plutonium Disposition: Facility Design Description, Waste Solidification Building. G-FDD-F-00007, Rev. 3, Washington Savannah River Company, Aiken, SC, August 2007.

4. Conduct of Engineering and Technical Support. WSRC Procedure Manual E7, Washington Savannah River Company, Aiken, SC.

5. Management Policies. WSRC Procedure Manual 1-01, Washington Savannah River Company, Aiken, SC.

6. Radioactive Waste Management. DOE Order 435.1, CN-1, U.S. Department of Energy, Washington, DC, August 28, 2001.

7. Facility Disposition. WSRC Procedure Manual 1C, Washington Savannah River Company, Aiken, SC.

WSRC-SA-2003-00002
Rev. 0

WASTE SOLIDIFICATION BUILDING PRELIMINARY DOCUMENTED SAFETY ANALYSIS

CHAPTER 17

MANAGEMENT, ORGANIZATION, AND INSTITUTIONAL SAFETY PROVISIONS

JULY 2008

SAVANNAH RIVER SITE
Aiken, SC 29808 · www.srs.gov

PREPARED FOR THE U.S. DEPARTMENT OF ENERGY UNDER CONTRACT NO. DE-AC09SR18500

DISCLAIMER

This document was prepared by Washington Safety Management Solutions LLC (WSMS), under contract with Washington Savannah River Company (WSRC), subject to the warranty and other obligations of that contract and in furtherance of WSRC's contract with the United States Department of Energy (DOE).

Release to and Use by Third Parties. As it pertains to releases of this document to third parties, and the use of or reference to this document by such third parties in whole or in part, neither WSMS, WSRC, DOE, nor their respective officers, directors, employees, agents, consultants or personal services contractors (i) make any warranty, expressed or implied, (ii) assume any legal liability or responsibility for the accuracy, completeness, or usefulness, of any information, apparatus, product or process disclosed herein or (iii) represent that use of the same will not infringe privately owned rights. Reference herein to any specific commercial product, process, or service by trademark, name, manufacture or otherwise, does not necessarily constitute or imply endorsement, recommendation, or favoring of the same by WSMS, WSRC, DOE or their respective officers, directors, employees, agents, consultants or personal services contractors. The views and opinions of the authors expressed herein do not necessarily state or reflect those of the United States Government or any agency thereof.

CONTENTS

Page

17.0 MANAGEMENT, ORGANIZATION, AND INSTITUTIONAL SAFETY PROVISIONS 1

17.1 INTRODUCTION 1

17.1.1 Objective 1

17.1.2 Scope 1

17.2 REQUIREMENTS 1

17.3 ORGANIZATION, FUNCTIONS, RESPONSIBILITIES, AND AUTHORITIES 1

17.3.1 Washington Savannah River Company 1

17.3.2 Waste Solidification Building Organization, Functions, Responsibilities, and Authorities 1

17.3.2.1 Waste Solidification Building Operations Manager 2

17.3.2.2 Waste Solidification Building Engineering Manager 3

17.3.2.3 Waste Solidification Building Maintenance First Line Supervisor 6

17.3.2.4 Plutonium Disposition Program Quality Assurance and Assessment Manager 6

17.3.2.5 Plutonium Disposition Program Training and Procedures Manager 6

17.3.3 Staffing and Qualification 6

17.4 SAFETY MANAGEMENT POLICIES AND PROGRAMS 1

17.4.1 Safety Review and Performance Assessment 1

17.4.1.1 Unreviewed Safety Question Reviews 1

17.4.1.2 Independent Assessment 1

17.4.1.3 Waste Solidification Building Self-Assessment 1

17.4.1.4 Facility Operations Safety Committee 2

17.4.1.5 Lessons Learned Program 2

17.4.2 Configuration and Document Control 2

17.4.2.1 Waste Solidification Building Configuration Management Program 2

17.4.2.2 Quality Assurance 3

17.4.3 Occurence Reporting 3

17.4.4 Safety Culture 3

17.5 FACILITY RECORDS 1

17.6 REFERENCES 1

ACRONYMS

CM	Configuration Management
DOE	U. S. Department of Energy
FEB	Facility Evaluation Board
FOSC	Facility Operations Safety Committee
M&O	Management and Operation
PDCF	Plutonium Disassembly and Conversion Facility
PDP	Plutonium Disposition Program
PDSA	Preliminary Documented Safety Analysis
QA	Quality Assurance
RSM	Records Schedule Matrix
SIRIM	Site Item Reportability and Issue Management
SRS	Savannah River Site
TSR	Technical Safety Requirements
USQ	Unreviewed Safety Question
WSB	Waste Solidification Building
WSRC	Washington Savannah River Company

17.0 MANAGEMENT, ORGANIZATION, AND INSTITUTIONAL SAFETY PROVISIONS

17.1 INTRODUCTION

17.1.1 OBJECTIVE

This chapter provides information that pertains to the management, organization, and institutional safety provisions of the Waste Solidification Building (WSB).

17.1.2 SCOPE

This chapter contains information on the following:

- Management
- Organizational structure
- Responsibilities
- Staffing and qualifications
- Safety reviews and performance assessments
- Configuration and document control
- Occurrence reporting and safety culture of the WSB

This chapter also describes the interfaces between the WSB and the site- and division-level organizations and programs.

The Savannah River Site (SRS) site-wide management, organization, and institutional safety program is described elsewhere (e.g., Chapter 17 of Reference 1). This chapter (Chapter 17 of this Preliminary Documented Safety Analysis [PDSA]) describes the features of the program that are specific to the WSB or that differ from the program described in Reference 1.

17.2 REQUIREMENTS

The Standards/Requirements Identification Document states the codes, standards, and regulations governing the management, organization, and institutional safety provision policies and program elements at the SRS (Ref. 2). Programmatic compliance assessments are performed against the Standards/Requirements Identification Document and documented as specified in the *Compliance Assurance Manual*, Washington Savannah River Company (WSRC) Procedure Manual 8B (Ref. 3). The Standards Management/Compliance Section maintains records of the programmatic compliance assessments.

17.3 ORGANIZATION, FUNCTIONS, RESPONSIBILITIES, AND AUTHORITIES

17.3.1 WASHINGTON SAVANNAH RIVER COMPANY

WSRC has been responsible for the management and operations of SRS since April 1, 1989. WSRC is organized into several business units, as follows:

- Management and Operations Business Unit (M&O) is the parent organization of the WSB. The M&O is managed by the M&O chief operating officer, who reports to the WSRC President. The following organizations within M&O will provide services that will support operations of the WSB:
  - Safeguards, security, and emergency services provides security, safeguards, emergency preparedness, fire protection services, and emergency medical services to the site.
  - Environment, safety, and health is responsible for site-wide safety support services and provides a point of contact between the line organizations and the U.S. Department of Energy (DOE) and regulatory agencies on safety, health, and Quality Assurance (QA) issues and all site environmental matters.
- Savannah River National Laboratory develops new technologies, refines existing technologies, supports analytical and experimental safety, and provides environmental and production support.
- Projects, Design, and Construction Business Unit, as the design agency, designs and constructs new facilities and handles renovation projects. WSB Engineering is the design authority for the WSB and approves all WSB engineering and construction activities.
- M&O engineering organization provides engineering support for the M&O Business Unit. WSB engineering organization reports to M&O engineering organization directly and to the WSB operations manager on a matrix basis. Transportation engineering (for the M&O engineering organization) will oversee transportation of the immobilized waste.
- Solid waste organization will oversee disposition of the immobilized low-level waste and transuranic waste forms.
- Liquid waste organization operates the SRS effluent treatment project, which will receive the non-hazardous, low-activity liquid waste effluents from the WSB.

17.3.2 WASTE SOLIDIFICATION BUILDING ORGANIZATION, FUNCTIONS, RESPONSIBILITIES, AND AUTHORITIES

The following paragraphs briefly describe the planned key positions. The organization and position titles described below are typical of the operating organization.

The WSB operations manager has the overall responsibility for managing the safe operation and maintenance of the WSB. This responsibility includes the following:

- The design, procurement, testing, repair, modifications, costs, and operation of all WSB processes, equipment, and facilities
- The safety, planning, training, and development of employees in WSB
- The communication between WSB, WSRC management, and DOE

The WSB operations manager is responsible for WSB compliance with WSRC standards as mandated in the safety, QA, security, service, industrial hygiene, and procedures manuals.

Operations activities at WSB will be performed in a manner such that the safety of the public, the facility, employees, and the environment will be paramount and the consideration for maintaining production is secondary. The *Conduct of Operations Manual,* WSRC Procedure Manual 2S (Ref. 4), provides the details of the operational activities implemented at WSB.

The WSB operations manager will report to the Plutonium Disassembly and Conversion Facility (PDCF) manager once the PDCF organization is established. The following managers will report to the WSB operations manager directly, or report on a matrix basis:

- WSB engineering manager
- WSB operations first line manager
- WSB maintenance first line supervisor

Managers/individuals not in M&O will also support the WSB on a matrix basis. These matrix managers will report administratively and technically through their identified WSRC division-level organization to their division-level managers and chief operating officers. They will be responsible for the implementation of the WSRC division-level programs and procedures within the operating facilities as directed by the WSB operations manager, and act as a liaison between their divisions within WSRC.

17.3.2.1 Waste Solidification Building Operations Manager

The WSB operations manager will be responsible for all storage, treatment, and transfer activities associated with the WSB.

The WSB operations manager will be responsible for the development and implementation of plans to ensure that the WSB complies with DOE, WSRC, and oversight (Defense Nuclear Facilities Safety Board, DOE-Savannah River Office and Facility Evaluation Board [FEB]) programs. These programs include DOE Order compliance, conduct of operations, safety, chemical controls, waste certification/minimization, Site Item Reportability and Issues Management (SIRIM), emergency preparedness, price anderson amendment act, fire protection, as low as reasonably achievable, and radiological control. The WSB operations manager will also manage self-assessment/monitoring support activities, and the preparation of responses to deficiencies identified by internal and external oversight groups.

17.3.2.2 Waste Solidification Building Engineering Manager

The WSB engineering manager will report to the PDCF engineering manager and on a matrix basis to the WSB operations manager. The engineering manager will be responsible for direct technical and engineering assistance as the cognizant technical function and the design authority for the WSB. The production and updating of the documented safety analysis, the Technical Safety Requirements (TSRs), and other authorization basis documents for the WSB will also be managed by the engineering manager.

The WSB engineering department will provide engineering support as the cognizant technical functions and the design authority for operations, maintenance, and testing activities at WSB. Engineering activities at WSB will be conducted in accordance with the requirements of *Conduct of Engineering and Technical Support*, WSRC Procedure Manual E7 (Ref. 5).

17.3.2.3 Waste Solidification Building Maintenance First Line Supervisor

The maintenance first line supervisor will report to the PDCF maintenance manager and on a matrix basis to the WSB operations manager and will be responsible for the maintenance of the assigned WSB facilities and equipment. maintenance activities at WSB will be conducted in accordance with *Conduct of Maintenance*, WSRC Procedure Manual 1Y (Ref. 6).

17.3.2.4 Plutonium Disposition Program Quality Assurance and Assessment Manager

The Plutonium Disposition Program (PDP) QA manager will report to the PDP quality, training, and procedures manager and on a matrix basis to the WSB operations manager. The PDP QA manager will be assigned the responsibility for the WSB QA programs to support the WSB operations manager. The PDP QA department will be the cognizant quality function for the WSB. The PDP QA manager will be responsible for ensuring that an appropriate QA program has been established and will have sufficient authority, access to work areas, organizational freedom, and sufficient independence from cost and schedule considerations to make unencumbered quality-affecting decisions.

The QA program will be implemented through the *Quality Assurance Manual*, WSRC Procedure Manual 1Q (Ref. 7).

17.3.2.5 Plutonium Disposition Program Training and Procedures Manager

The PDP training and procedures manager will report to the PDP quality, training, and procedures manager and on a matrix basis to the WSB operations manager. The WSB training and WSB procedures manager will be responsible for all aspects of the WSB training and procedure program management, including directing an organization responsible for developing and controlling facility operating and maintenance procedures, and the development and delivery of facility-specific training for operators, shift managers/shift supervisors, and technical staff for the entire WSB organization.

WSB training and qualification programs will be implemented by the *Training and Qualification Program Manual*, WSRC Procedure Manual 4B (Ref. 8).

17.3.3 STAFFING AND QUALIFICATION

The staffing level and knowledge, skills, and abilities of personnel in organizations covered in this chapter will contribute to the safety basis of the WSB. This section discusses site-wide and WSB training, qualification, fitness-for-duty requirements, and the programs and provisions for monitoring staff safety performance.

Key operations and technical positions in the various departments of the WSB will be staffed by personnel with technical degrees and/or several years of industrial experience, primarily in the nuclear industry. The education and experience requirements for personnel involved in the operation, maintenance, training, and technical support of WSB will be based on WSRC Procedure Manual 4B (Ref. 8) and will be established to ensure that qualified personnel are selected and assigned to positions that have a functional impact on safety and reliability.

Recruitment of new professional exempt personnel will be accomplished through M&O Professional Staffing. The staffing plan will be based on the WSB mission, specific planned activities, goals, and milestones. These plans are reviewed and approved by DOE.

The shift manning requirements (beyond the minimum staffing requirements defined in this PDSA and associated TSR) for normal operations of the WSB will be based upon the operational activities and support required for the emergency response organization. These requirements will be approved by the WSB facility manager and documented in standing orders for WSB operations.

The minimum shift manning requirements for various modes of WSB operation will be identified in the TSR for the WSB.

Training and qualification requirements for personnel involved with organizations and programs referred to in this chapter will be specified in the following site documents:

- *Management Policies*, WSRC Procedure Manual WSRC-1-01 (Ref. 9)
- *Management Requirements and Procedures*, WSRC Procedure Manual 1B (Ref. 10)
- Program-specific manuals

The following documents are examples of program-specific manuals:

- *Fire Protection Program*, WSRC Procedure Manual 2Q (Ref. 11)
- *Conduct of Operations Manual*, WSRC Procedure Manual 2S (Ref. 4)
- *Training and Qualification Program Manual*, WSRC Procedure Manual 4B (Ref. 8)
- *Radiological Control Manual*, WSRC Procedure Manual 5Q (Ref. 12)

Chapters 7, 11, and 12 of this PDSA address the training and qualification requirements for the associated programs.

The WSRC training program is established by Management Policy 1.18, "Employee Training," implemented through WSRC Procedure Manual 4B (Ref. 8). On-shift training is addressed in Chapter 11, Section 11.3, of this PDSA.

The WSB facility managers, engineering manager, plant support manager, maintenance operations manager, and training and procedures manager will be trained in the "fitness for duty" program, as required by WSRC Procedure Manual 4B (Ref. 8).

The conduct of operations (Ref. 4) program establishes high operating standards and ensures the communication of those standards to operations personnel. The program also addresses accountability, utilization of resources, and general policies.

Operational performance will be monitored, documented, and trended for future reference and to make improvements in operational performance. Supervisors and managers will spend time in the field observing operations activities. In addition, various successes and performance problems will be monitored, documented, and trended on a regular basis (Ref. 4).

17.4 SAFETY MANAGEMENT POLICIES AND PROGRAMS

17.4.1 SAFETY REVIEW AND PERFORMANCE ASSESSMENT

The oversight functions in program-specific areas such as industrial safety, fire protection, and hazardous material control are described in detail in Chapters 8 and 11 of this PDSA and will be fully implemented at the WSB.

WSB will have a monitoring and assessment program to ensure that the material condition, industrial safety practices, cleanliness and housekeeping, and radiological and hazard protection practices meet management's standards. This monitoring program will ensure that noteworthy practices are recognized, performance deficiencies are identified, and associated corrective actions are implemented to provide continuous improvement in facilities and operations. The comprehensive self-assessment program will ensure that key attributes of the *Conduct of Operations Manual* (Ref. 4), maintenance, and training are understood and are being effectively implemented in WSB.

17.4.1.1 Unreviewed Safety Question Reviews

Unreviewed Safety Question (USQ) reviews will be used in considering whether or not a proposed activity (modification, procedure change, test, or experiment) involves a USQ as defined in WSRC Procedure Manual 11Q, Procedure 1.05 (Ref. 13).

Technical reviews will be used to verify the compatibility of a change in facility design, and ensure that the proposed change will not adversely affect facility safety, reliability, or operation (Ref. 5).

Cognizant engineers at WSB will be qualified in the USQ process and perform USQ reviews during the design authority technical review of a proposed activity per WSRC Procedure Manual E7 (Ref. 5).

17.4.1.2 Independent Assessment

The WSRC FEB will provide company-level independent oversight to WSB. The *Assessment Manual*, WSRC Procedure Manual 12Q (Ref. 14), defines the structure, principles, responsibilities, and associated requirements and procedures for conducting independent assessments through the FEB program.

17.4.1.3 Waste Solidification Building Self-Assessment

The WSB self-assessment program will be developed and executed based on a graded approach with a depth of inquiry and frequency of review being dependent on the importance to safety (personnel, public, and environment), regulatory compliance, and operational integrity. The WSB self-assessment program will include line management self-assessment (self-verification,

line management walkdowns, and formal line management self-assessments), independent assessment, management assessment and, when applicable, readiness self-assessment.

17.4.1.4 Facility Operations Safety Committee

The WSB Facility Operations Safety Committee (FOSC) will review matters that affect the safe operation and associated activities of the WSB and will advise the facility manager. The facility manager will appoint the chairman of the FOSC and approve the FOSC membership, which will consist of managers or alternates from various facility organizations as core (voting members) and non-voting members.

FOSC meetings will be scheduled as needed. The FOSC members/alternates will be required to complete qualification and training requirements for their assigned job position. Additionally, they will be required to complete specific training identified for the FOSC membership. WSRC Procedure Manual 1B (Ref. 10), Procedure 4.19, provides the details of function, responsibilities, membership, and qualification of members of the WSB FOSC.

17.4.1.5 Lessons Learned Program

Management Requirements and Procedures, Procedure 4.14, "Lessons Learned Program," (WSRC Procedure Manual 1B [Ref. 10]) requires systematic reviews of operating experiences at SRS facilities, DOE complexes, and commercial nuclear industry facilities to generate lessons learned that promote the safe, effective operation of SRS facilities.

17.4.2 CONFIGURATION AND DOCUMENT CONTROL

Configuration control at WSB will be achieved through the implementation of the WSRC Configuration Management (CM) program outlined in the *Conduct of Engineering and Technical Support*, WSRC Procedure Manual E7 (Ref. 5). All activities will be performed in accordance with the site QA program described in Chapter 14 of this PDSA.

17.4.2.1 Waste Solidification Building Configuration Management Program

The WSB CM Program will be a facility lifetime program that will assure that the facility is maintained and operated within its design and safety envelopes. This program will be developed in accordance with the requirements of WSRC Procedure Manual E7 (Ref. 5). The WSB CM program will fulfill WSRC Procedure Manual E7 (Ref. 5) requirements by defining the following activities:

- CM integration
- Configuration definition
- CM information management
- Configuration control

- Assessments

Configuration will be established by defining the physical and functional requirements, verifying the essential attributes in a field walkdown program, and verifying critical functions. Change controls will be in place to ensure proper documentation, reviews, and approvals of changes.

17.4.2.2 Quality Assurance

CM and document control activities will be performed in accordance with the site QA program. The site QA program will be implemented at WSB through WSRC Procedure Manual 1Q (Ref. 7) and is described in Chapter 14 of this PDSA.

17.4.3 OCCURENCE REPORTING

SIRIM, WSRC Procedure Manual 9B (Ref. 15) implements a system of procedures referred to as the SIRIM process.

WSB has a program of follow-up review of SIRIM events, conditions, or concerns that includes the following elements:

- Review of the final report by the responsible FOSC for emergencies and unusual occurrences
- Review of the final report by the appropriate lessons learned coordinator for identification and reporting of lessons learned

17.4.4 SAFETY CULTURE

A safety culture is a work atmosphere that promotes the interest and involvement of all personnel in their personal safety and the safety of their co-workers. The safety culture facilitates a questioning attitude toward safety-related activities and equipment and ensures that personnel understand the potential risks to the facility and workers as well as the rewards and sanctions associated with their own personal safety performance. This atmosphere is exemplified by employee participation in the site safety and health program as implemented through documents such as the *Employee Safety Manual*, WSRC Procedure Manual 8Q (Ref. 16), and the *Industrial Hygiene Manual*, WSRC Procedure 4Q (Ref. 17).

WSRC management practices, along with their implementing programs, foster a safety culture at SRS. WSRC management practices are specified in WSRC Procedure Manual WSRC 1-01 (Ref. 9), and are implemented through WSRC Procedure Manual 1B (Ref. 10), and program-specific site manuals.

17.5 FACILITY RECORDS

There are two major components of records management — a document control system and a records retention system. The document control system provides a means of ensuring that documents important to the operation of SRS are controlled consistently and are available to meet prescribed requirements. Documents may be written, recorded, or photographic information describing, defining, specifying, reporting, or certifying activities, requirements, procedures, or results. Records include procedures, instructions, plant manuals, reports, drawings, standards, specifications, basic data, vendor-supplied data, and controlled correspondence.

The management services department is responsible for the document control system to distribute site-wide manuals and maintains the control system for distribution of unclassified controlled documents. The classified document control group maintains the control system for the distribution of classified controlled correspondence that requires receipt acknowledgment by signature. WSB in turn will be responsible for establishing and maintaining a documented administrative control system for documents generated or processed within the facility.

The management services department maintains a controlled index of controlled documents that provide site-wide instructions for performing work, the revision status, and their unique identification numbers. An index of approved procedures is maintained. Approved procedures and drawings for WSB will be controlled and readily available.

Retention of records is based upon categories and retention periods established by the Records Schedule Matrix (RSM). The management services department is responsible for the RSM. The RSM ensures that DOE retention requirements are met. The schedule identifies retention periods and disposition instructions for each category. The completed records are transmitted to the management services department in accordance with the RSM.

Maintenance of training records for employees is described in Chapter 12 of this PDSA, and the maintenance of radiological control information records (such as dosimetry records) is described in Chapter 7.

17.6 REFERENCES

1. Savannah River Site DSA Support Document – Site Characteristics and Program Descriptions. WSRC-IM-2004-00008, Rev. 1, Washington Savannah River Company, Aiken, SC, August 2007.

2. Standards/Requirements Identification Document. WSRC-RP-94-1268, Washington Savannah River Company, Aiken, SC.

3. Compliance Assurance Manual. WSRC Procedure Manual 8B, Washington Savannah River Company, Aiken, SC March 1998.

4. Conduct of Operations Manual. WSRC Procedure Manual 2S, Washington Savannah River Company, Aiken, SC.

5. Conduct of Engineering and Technical Support. WSRC Procedure Manual E7, Washington Savannah River Company, Aiken, SC.

6. Conduct of Maintenance. WSRC Procedure Manual 1Y, Washington Savannah River Company, Aiken, SC.

7. Quality Assurance Manual. WSRC Procedure Manual 1Q, Washington Savannah River Company, Aiken, SC.

8. Training and Qualification Program Manual. WSRC Procedure Manual 4B, Washington Savannah River Company, Aiken, SC.

9. Management Policies. WSRC Procedure Manual 1-01, Washington Savannah River Company, Aiken, SC.

10. Management Requirements and Procedures. WSRC Procedure Manual 1B, Washington Savannah River Company, Aiken, SC.

11. Fire Protection Program. WSRC Procedure Manual 2Q, Washington Savannah River Company, Aiken, SC.

12. Radiological Control Manual. WSRC Procedure Manual 5Q, Washington Savannah River Company, Aiken, SC.

13. Facility Safety Document Manual. WSRC Procedure Manual 11Q, Washington Savannah River Company, Aiken, SC.

14. Assessment Manual. WSRC Procedure Manual 12Q, Washington Savannah River Company, Aiken, SC.

15. Site Item Reportability and Issue Management (SIRIM). WSRC Procedure Manual 9B, Washington Savannah River Company, Aiken, SC.

16. Employee Safety Manual. WSRC Procedure Manual 8Q, Washington Savannah River Company, Aiken, SC.

17. Industrial Hygiene Manual. WSRC Procedure Manual 4Q, Washington Savannah River Company, Aiken, SC.

WSRC-SA-2003-00002
Rev. 0

WASTE SOLIDIFICATION BUILDING PRELIMINARY DOCUMENTED SAFETY ANALYSIS

CHAPTER 18

EVALUATION OF COMPLIANCE WITH DOE-STD-1189-2008 (U)

JULY 2008

UNCLASSIFIED

DOES NOT CONTAIN UNCLASSIFIED CONTROLLED NUCLEAR INFORMATION

DC & Reviewing Official: David Allison
WSMS

Basis: IG-SR-03, 02/04
Date: 5/06/08

SAVANNAH RIVER SITE
Aiken, SC 29808 • www.srs.gov

PREPARED FOR THE U.S. DEPARTMENT OF ENERGY UNDER CONTRACT NO. DE-AC09SR18500

DISCLAIMER

This document was prepared by Washington Safety Management Solutions LLC (WSMS), under contract with Washington Savannah River Company (WSRC), subject to the warranty and other obligations of that contract and in furtherance of WSRC's contract with the United States Department of Energy (DOE).

Release to and Use by Third Parties. As it pertains to releases of this document to third parties, and the use of or reference to this document by such third parties in whole or in part, neither WSMS, WSRC, DOE, nor their respective officers, directors, employees, agents, consultants or personal services contractors (i) make any warranty, expressed or implied, (ii) assume any legal liability or responsibility for the accuracy, completeness, or usefulness, of any information, apparatus, product or process disclosed herein or (iii) represent that use of the same will not infringe privately owned rights. Reference herein to any specific commercial product, process, or service by trademark, name, manufacture or otherwise, does not necessarily constitute or imply endorsement, recommendation, or favoring of the same by WSMS, WSRC, DOE or their respective officers, directors, employees, agents, consultants or personal services contractors. The views and opinions of the authors expressed herein do not necessarily state or reflect those of the United States Government or any agency thereof.

CONTENTS

Page

18.0 EVALUATION OF COMPLIANCE WITH DOE-STD-1189-2008 18-1

18.1 INTRODUCTION 18-1

18.2 DOE-STD-1189-2008 DOSE METHODOLOGY COMPLIANCE 18-1

18.3 1189 FORMAT AND CONTENT COMPLIANCE 18-3

18.4 CONTRACTOR INTEGRATED PROJECT TEAM AND SAFETY DESIGN INTEGRATION TEAM 18-4

18.5 IMPACT ASSESSMENT OF DOE-STD-1189-2008 ON WASTE SOLIDIFICATION BUILDING SEISMIC DESIGN 18-5

18.6 CONCLUSIONS 18-8

18.7 REFERENCES 18-9

ACRONYMS

ARF	Airborne Release Fraction
CD	Critical Decision
CFR	Code of Federal Regulations
CHAP	Consolidated Hazards Analysis Process
CIPT	Contractor Integrated Project Team
DCF	Dose Conversion Factor
DOE	Department of Energy
DR	Damage Ratio
DSA	Documented Safety Analysis
EPHA	Emergency Planning Hazards Assessment
HAW	High Activity Waste
IPT	Integrated Project Team
LPF	Leak Path Factor
m	meter
MAR	Material At Risk
NPH	Natural Phenomena Hazard
PDSA	Preliminary Documented Safety Analysis
RF	Respirable Fraction
RG	Regulatory Guide
SDC	Seismic Design Criteria
SDD	System Design Description
SDIT	Safety Design Integration Team
SSC	Structure, System, and Component
ST	Source Term
STD	Standard
TSR	Technical Safety Requirement
USNRC	U. S. Nuclear Regulatory Commission
WG	Worker Group
WSB	Waste Solidification Building
WSRC	Washington Savannah River Company

18.0 EVALUATION OF COMPLIANCE WITH DOE-STD-1189-2008

18.1 INTRODUCTION

Department of Energy (DOE) Standard (STD) 1189-2008 (Ref. 1) was issued as the development of the Waste Solidification Building (WSB) Preliminary Documented Safety Analysis (PDSA) was concluding. The PDSA was developed in accordance with Title 10, Code of Federal Regulations (CFR), Part 830 (Ref. 2) and DOE-STD-3009-94 (Ref. 3). This Chapter has been created to demonstrate compliance with the intent of the new standard.

18.2 DOE-STD-1189-2008 DOSE METHODOLOGY COMPLIANCE

A major change directed by DOE-STD-1189-2008 (Ref. 1) is specific direction to calculate co-located worker doses at 100 meters (m) using an X/Q value of 3.5E-03 sec/m^3 in place of site specific meteorological data that was used in the WSB analysis. A revision to the WSB unit curie dose consequence calculation (Ref. 4) was performed to determine dose factors based on this value. Table 18-1 provides a comparison of the unmitigated 100-m doses for all Consolidated Hazards Analysis Process (CHAP) events using dose factors for the methodology used in PDSA development and using DOE-STD-1189-2008 methodology.

There are a total of seven additional events that exceed the 100 rem criteria for the 100 m receptor using the DOE-STD-1189-2008criteria. These events include CEM-1-001, HAL-2-007, HAL-2-008, HAL-3-003, HAL-3-004, HAL-3-005, and HAL-3-011. For a majority of these events, controls already credited in the PDSA are adequate for the consequence criteria of DOE-STD-1189-2008 and DOE-STD-3009.

In events HAL-2-007, HAL-3-003, HAL-3-004, HAL-3-005, and HAL-3-011, the consequences result from the release of material into the High Activity Waste (HAW) room. In these scenarios, the Safety Significant HAW ventilation system had been selected for protection to the facility worker (Worker Group [WG] 1 and WG2). This same control will provide mitigation (via filtration) of the releases to protect the co-located worker (WG3).

Event HAL-2-008 results in the airborne material inside a process vessel due to an explosion in a fluidic pump charge vessel. In this scenario, the Safety Significant Process Vessel Ventilation System has been selected for protection to the facility worker (WG1 and WG2). This same control will provide mitigation (via filtration) of the releases to protect the co-located worker (WG3).

Event CEM-1-001 is a fire in the cementation area involving up to 420 grams of Am-241 that has been mixed with cement grout mixture. The original 100m dose consequence calculated in the CHAP for this PDSA was 46.2 rem conservatively based on the material being in a liquid/ slurry form and using an airborne release fraction (ARF) for boiling liquids. This did not challenge the 100 rem criteria for workers, therefore no Safety Significant controls were selected for protection of the co-located worker, and no more detailed analysis was pursued. Applying the X/Q values specified in DOE-STD-1189-2008 causes the consequences for this scenario to

increase to 344 rem, exceeding the 100 rem criteria. This led to further evaluation of the event and revealed that the ARF is excessively conservative for the actual event conditions. The Material At Risk (MAR) in this scenario has already been mixed with grout. A portion of this mix may be in a liquid state, however it is expected that the mix will no longer be in a flowable liquid form an hour after mixing. Therefore, most of the radionuclide content will not be in a form that is readily releasable. There will be approximately eight drums produced in a shift, and there is storage space for 12 drums to be staged following the cementation process prior to shipment to the storage pad outside the process building. This scenario has been evaluated in more detail. The same Key Assumption for the cementation area inventory of 420 grams of Am-241 equivalent is maintained. An additional Key Assumption is added that no more than 20% of the maximum inventory of 420 grams Am-241 is a liquid/slurry, while the remainder is solid material. This allows application of the lower ARFs for solid materials. This set of assumptions significantly lowers the consequences while reflecting the nature of the event more accurately. Given the Key Assumptions and applying the DOE-STD-1189-2008 100m dose factor for a 20 minute release from Reference 4, the dose calculation is as follows:

ST = MAR*DR*(ARF*RF)*LPF

where:

MAR = Material At Risk - The amount of radioactive or hazardous material present in a discrete physical location that is separated from other radionuclide or hazardous material-bearing areas by adequate distance or physical barriers so that the areas do not interact during postulated accident conditions.

DR = Damage Ratio - The fraction of MAR impacted by the accident-generated conditions.

ARF = Airborne Release Fraction - The coefficient used to estimate the amount of a radioactive material that can be suspended in air and available for transport under a specific set of accident conditions.

LPF = Leak Path Factor - The fraction of airborne materials transported from containment or confinement by the existing flow through the pathway configuration under evaluation. This factor is always assumed to be one for unmitigated analysis.

RF = Respirable Fraction - The fraction of airborne particles that can be transported through the air and inhaled into the human respiratory system. These particles are commonly assumed to be 10 µm aerodynamic equivalent diameter and less. (Aerodynamic equivalent diameter is the diameter of a sphere of density 1 grams per cubic centimeter that exhibits the same terminal velocity as the particle in question.)

ST = 0.2(420 g Am241)(3.44Ci/g)*1*(2.0E-03)*1 = 5.78E-01 Ci [Liquid]

ST = 0.8(420 g Am241)(3.44Ci/g)*1*(1.0E-06)*1 = 1.16E-03 Ci [Solid]

Dose = ST*Dose Conversion Factor

(5.78E-01 + 1.16E-03) * 1.19E+02 rem/Ci = **68.9 rem**

This is below the 100 rem threshold defined in DOE-STD-1189-2008 , therefore no additional controls are required.

All events have been qualitatively evaluated with respect to mitigated consequences, and in all cases the conclusion was that the previously selected controls were adequate to reduce consequences below guidelines using DOE-STD-1189-2008 methodology.

18.3 1189 FORMAT AND CONTENT COMPLIANCE

DOE-STD-1189-2008 (Ref. 1) defines many format and content requirements and recommendations for the safety documentation of a project based on the design stage. A crosswalk between the WSB existing safety documentation that has been produced in compliance with DOE-STD-3009 (Ref. 3) and the requirements and recommendations of DOE Standard 1189 was developed in order to identify any significant differences and demonstrate compliance with the intent of DOE-STD-1189-2008. Tables 18-2 and 18-3 document the crosswalk between the two standards and this PDSA.

Table 18-2 evaluates compliance with format and content requirements of the two standards. While there are differences in the format and layout requirements of the two standards, the intent of the two are largely the same. The only significant area identified in Table 18-2 that does not comply with DOE-STD-1189-2008 content requirements is the lack of chemical consequence evaluation in Section 3.4. Section 3.3.2 of the PDSA provides discussion of the screening of chemical hazards and documents reasons for not requiring further analysis. In addition to Section 3.3.2 of the PDSA, there is an appendix to the CHAP report providing greater detail of the chemical evaluation. This meets the intent of the DOE-STD-1189-2008 specified analysis.

Table 18-3 evaluates compliance with additional recommendations provided in DOE-STD-1189-2008 for documentation/activities that should be completed during the design phase of the project to support the safety basis. These are typical activities associated with Safety Management Programs (from Table 7-1 of DOE-STD-1189-2008), which are required to be addressed in Chapters 6 through 17 of the DOE-STD-3009 compliant Documented Safety Analysis (DSA). Any aspects important to design should be considered and integrated into the design effort as early as practical and at least by completion of the detailed design. Two issues were identified that are not in compliance with the recommendation: 1) An Emergency Planning Hazards Assessment (EPHA) has not been prepared, and 2) Operating and Maintenance Procedures have not been drafted.

<u>EPHA</u>

The WSB project has completed a Hazards Survey (Ref. 5) to identify conditions that must be addressed in an EPHA. The Hazards Survey includes a compilation, review, and screening of chemical, radiological, and biological hazards located within structures comprising the WSB Facility. The Hazards Survey has been developed based on the best information that is available. It is anticipated that inventories and locations may change during the construction phase of the

project. Since the WSB has not been built, development of a Preliminary EPHA would provide no additional information beyond that presented in the Hazards Survey. The EPHA will be developed and formally approved to capture the "as constructed" information prior to WSB facility operation.

Operating and Maintenance Procedures

DOE-STD-1189-2008 (Ref. 1) requires a systematic approach to develop operating procedures based on the design and identified hazard controls to operate SSCs within their design and DOE authorized limits through the Technical Safety Requirements (TSRs). It also requires operators to be trained on process and hazard fundamentals; structure, system, and component (SSC) operations and functions; and specific operating procedures.

Each of the WSB System Design Descriptions (SDDs) describes a system and its components, processes and associated hazards. Section 3.0, Operation, provides the principles of operation and details the process steps relevant to the system. As the design is finalized, the SDDs will be revised to include all the relevant and necessary details of operation. The SDDs will be used as the basis for developing the operational procedures during the construction phase of the project.

The majority of the WSB operating procedures are planned to be electronic procedures on the Process Control System. Development of the procedures will be a joint effort between Operations, Design Authority and P&CS Engineering. Procedure development is scheduled to begin early in the construction phase of the project so that the majority of the procedures are available for use by the Startup group during startup testing (Ref. 6).

18.4 CONTRACTOR INTEGRATED PROJECT TEAM AND SAFETY DESIGN INTEGRATION TEAM

DOE-STD-1189-2008 recommends a Contractor Integrated Project Team (CIPT) be considered for all Hazard Category 1 and 2 nuclear projects. In addition, a Safety Design Integration Team (SDIT), if established should include the key members of the contractor project team who implement Safety-in-Design for the project.

CIPT

DOE Order 413.3A , Chg 1 (Ref. 7), requires the formation of an Integrated Project Team (IPT), to be led by a Federal Project Director. Subgroups to the IPT may be chartered during the project, including a CIPT led by the Project Manager, as well as subgroups to the IPTs for specific tasks or deliverables. Further information on the roles, responsibilities, and functions of the IPT are provided in the Office of Engineering and Construction Management Project Management Practices, *Integrated Project Teams.* The CIPT provides the overarching contractor focal point specifically charged with executing a project through interactions with and support to the IPT and Federal Project Director.

The WSB project team members, along with their roles and responsibilities, have been detailed in the WSB Project Execution Plan and the Team Execution Plan for the WSB (Ref. 8). The documents cover a broad range of topics including objectives, scope, safety documentation,

technology, organization, interfaces, change control, engineering plan, configuration management, permitting and quality. Together, these documents detail the organization and interactions to support the IPT and Federal Project Director in a manner that meets the intent of a CIPT.

SDIT

DOE-STD-1189-2008 recommends that the contractor establish an SDIT, especially for complex or hazardous projects. The SDIT would be the Safety-in-Design team support for the CIPT and would also be the key Safety-in-Design interface with the Federal IPT. The SDIT should implement the Safety Design Strategy.

The WSB project team members, along with their roles and responsibilities, have been detailed in the WSB Project Execution Plan and the Team Execution Plan for the WSB (Ref. 8). The documents meet the requirements for Safety-in-Design team support for the CIPT and the key Safety-in-Design interface with the Federal IPT. Specifically the Project Design Authority manager is tasked with overseeing the safety basis including DSA development, functional classification of SSCs, completing pre-operational process hazards reviews, managing technical aspects for the development of the Authorization Basis of the project including both the engineering deliverables produced by Design personnel, as well as products produced by others outside the Project Team (Structural Mechanics, Systems Engineering, Architect-Engineers, Safety Engineering, etc.). These documents support the use of a multi-disciplinary team to identify and analyze the hazards in the facility and to ensure that the designed controls:

- are adequate to perform the safety function,
- do not create an undue burden on operations,
- can be designed to fulfill the safety function, and
- fit within the project cost and schedule

18.5 IMPACT ASSESSMENT OF DOE-STD-1189-2008 ON WASTE SOLIDIFICATION BUILDING SEISMIC DESIGN

This report documents an assessment of the impacts to the WSB project design requirements for compliance with DOE-STD-1189-2008 (Ref. 1), Appendix A. DOE-STD-1189-2008 Appendix A provides guidance and criteria to specify the safety classification and seismic design basis for SSCs for radiological hazards. This assessment to DOE-STD-1189-2008 is conducted in two parts:

- First, the Natural Phenomena Hazards (NPH) design inputs used for WSB design are compared to the inputs that would be required by DOE 1189 for the applicable Seismic Design Criteria (SDC),
- Second, the capacity or acceptance criteria used in WSB design are evaluated against the required Limit State as determined from DOE-STD-1189-2008.

Evaluation of Seismic Design Criteria and other Natural Phenomena Hazard Criteria

With respect to Public Protection Criteria, DOE-STD-1189-2008, Section A.2.1 requires that SSCs credited for prevention or mitigation of radiological events whose consequences exceed 25 rem shall be designated Safety Class and be designated SDC-3 for seismic design. Similarly, DOE-STD-1189-2008, Section A.2.2 requires that SSCs credited for prevention or mitigation of radiological events whose consequences to the co-located worker exceed 100 rem shall be designated Safety Significant and be designated SDC-3 for seismic design.

The safety classification of SSCs for the WSB to support Critical Decision 3 (CD-3) for the project is complete. There are no SSCs classified as Safety Class, however, several scenarios resulted in exposure to the co-located worker that exceeds 100 rem and several SSCs are classified as Safety Significant (Refs. 9, 10, 11, 12). Therefore, the applicable SDC for Safety Significant SSCs for WSB under the requirements of DOE-STD-1189-2008 would be SDC-3.

DOE-STD-1189-2008 requires that seismic response spectra be developed probabilistically in accordance with DOE Standards 1022 and 1023 (Refs. 13, 14) until ANS Standards 2.27 and 2.29 are formally issued. WSB has utilized the US Nuclear Regulatory Commission (USNRC) Regulatory Guide 1.60 (RG 1.60) as the seismic input for design, designated as PC-3+ by the WSB Project. The seismic spectrum in RG 1.60 was developed deterministically and does not comply with the specified methodologies. However, the Savannah River Site (SRS) Performance Category 3 (PC-3) seismic response spectrum was developed in accordance with DOE Standards 1022 and 1023. Utilizing the SRS PC-3 spectrum and the requirements of ASCE 43-05 (Ref. 15), as required by DOE-STD-1189-2008, SRS specific SDC-3, SDC-4 and SDC-5 seismic response spectra were generated to determine the approximate SDC equivalence of the RG 1.60 spectrum. It is shown that RG 1.60 is equivalent to an SDC-4 level seismic event (see Appendix A).

Per DOE-STD-1189-2008, Section A.1, other NPHs (wind/tornado, rain and flooding) are to be developed in accordance with DOE Standards 1020, 1021, 1022 and 1023 (Refs. 16, 17, 13 and 14). For SRS, these DOE standards have been implemented in the development of these other NPH as promulgated via SRS Engineering Standards 01060 and 01061 (Ref. 18, 19). Since WSB was designed in accordance with SRS Engineering Standards 01060 and 01061, compliance with DOE-STD-1189-2008 is achieved for other NPHs.

Evaluation of Limit States

Next in the assessment process is to determine the Limit State for each category of SSC designated to prevent or mitigate the consequences of the seismic event. The Limit State in combination with the Seismic Design Category establishes the appropriate criteria for use in the design.

From the Safety Requirements Specifications for WSB (Refs. 9, 10, 11, 12), the classes and functional requirements of Safety Significant SSCs required for seismic events can be summarized as follows:

1. Building Structure: Position retention
2. Tanks and vessels: Maintain pressure boundary

3. Ducts: Maintain pressure boundary
4. Supports for equipment and commodities (piping, tubing, conduit, cable tray and ducting): Position retention
5. Mechanical and electrical SSC:
    - Pumps and valves: Maintain pressure boundary and active function (maintain operability) when required
    - Dampers: Maintain pressure boundary and active function (maintain operability) when required
    - Instrumentation and controls: active function (maintain operability)
    - Electrical equipment: active function (maintain operability)
6. Filters: Maintain pressure boundary and maintain integrity of filter media (operability) when required
7. Instrumentation and Control/Electrical distribution (conduit/cable trays): Position retention
8. Piping: Maintain pressure boundary

From ANS 2.26 (Ref. 20), Appendix B, based on the above functional requirements, it is concluded that these classes of equipment would be required to be designed to Limit States C.

From ASCE 43-05 (Ref. 15), the design goal for SDC-3 at Limit State C for all SSCs is elastic design with limited permanent (plastic) deformation. In general, the allowable stress for design of each class of equipment in accordance with the national consensus codes recommended by ASCE 43-05 is elastic with very limited amounts of inelastic behavior. ASCE 43-05 provides for the use of an inelastic energy absorption factor, F_μ, in conjunction with these codes that permits a greater degree of inelastic behavior than allowed by the codes for these equipment classes. Active components are typically qualified by testing. There is no inelastic energy absorption factor, F_μ, for qualification by testing since the Limit State is directly specified for the component (e. g., function requirement) that defines its acceptance criteria. However, margins are added by ASCE 43-05 by the requirement to increase facility specific test spectra. WSB methods for qualification by test comply with ASCE 43-05.

Table 18-4 summarizes the ANS 2.26 function definition for Limit State C, the ASCE 43-05 recommended design code and the design code, used for WSB for each general type category of SSC at WSB.

For WSB the design for the above classes of SSCs and supports exceeds the requirements for Limit State C by:

- utilizing codes that allow only elastic behavior or meeting the requirements by allowing limited inelastic behavior plus,
- electing not to use the F_μ factor, thus reducing potential inelastic behavior below that allowed by ASCE 43-05.

Seismic Design Criteria and other NPH Criteria Conclusion

It is concluded that WSB generally exceeds the NPH design requirements of DOE-STD-1189-2008.

In particular the seismic design clearly exceeds the requirements. The required design level is SDC-3, however, the seismic level used satisfies SDC-4. The acceptance criteria used for design and analysis as a minimum satisfies Limit State C criteria, as required, but most cases slightly exceed Limit State C requirements or meet Limit State D criteria.

18.6 CONCLUSIONS

The Waste Solidification Building Safety Documentation was written to comply with 10 CFR 830 and DOE-STD-3009. Late in the process DOE-STD-1189-2008 was approved. Following a review of the documentation, it has been recognized that while there are some differences in format and methodology, the content requirements and intent of DOE-STD-1189-2008 are largely met. The two greatest differences are the seismic design criteria and the methodology for calculation of consequence to the 100-m receptor. With respect to the consequence calculation methodology, a comparison of the consequences shows a significant increase in dose potential using the DOE-STD-1189-2008 methodology, but there is no impact on the design of the project. This is because Safety Significant SSCs and specific administrative controls were already selected to prevent or mitigate events. Under Standard 1189 guidance, these same controls are applicable; they simply apply to a larger number of events.

Similarly, evaluation of the WSB seismic design determined that DOE-STD-1189-2008 seismic design criteria were generally exceeded and always met. Therefore, there is no impact on the design of the project due to the implementation of DOE-STD-1189-2008 seismic design criteria.

18.7 REFERENCES

1. Integration of Safety into the Design Process, DOE-STD-1189-2008, U.S. Department of Energy, Washington, DC, March 2008
2. Nuclear Safety Management, Title 10, Code of Federal Regulations, Part 830, U. S. Department of Energy, Washington, DC.
3. Preparation Guide for U.S. Department of Energy Nonreactor Nuclear Facility Safety Analysis Reports. DOE-STD-3009-94, Change Notice No. 3, U.S. Department of Energy, Washington, DC, March 2006
4. Brotherton, K.M., and Thoman, D.C. WSB Radiological Consequence Analysis. S-CLC-F-00617, Rev. 1, Washington Savannah River Company, Aiken, SC, June 2007.
5. Preliminary Hazard Survey for the Waste Solidification Building, ESH-F-00002, Revision 0, Washington Savannah River Company, Aiken, SC, January 2008.
6. NNP-WSB-2008-00019, Interoffice Memorandum, To: Will Davis, From: Joel Clark, WSB Operating Procedures, Training, and Qualification, June 19, 2008.
7. DOE Order 413.3A , Chg 1
8. G-PMP-F-00024, WSB Project Execution Plan and the Team Execution Plan for the WSB
9. M-ESR-F-00128, Safety Requirement Specification for Waste Solidification Building Process Systems
10. M-ESR-F-00131, Safety Requirement Specification for Waste Solidification Building Active Confinement Ventilation System
11. J-ESR-F-00027, Waste Solidification Building Bldg. 236-3F Safety Requirement Specification
12. F-ESR-F-00161, Safety Requirement Specification for Waste Solidification Building Wet Pipe Fire Suppression System
13. DOE STD 1022, Natural Phenomena Hazards Site Characterization Criteria
14. DOE 1023, Natural Phenomena Hazards Site Assessment Criteria
15. ASCE 43-05, Seismic Design Criteria for SSC in Nuclear Facilities
16. DOE STD 1020, Natural Phenomena Hazards Design and Evaluation Criteria for Department of Energy Facilities
17. DOE STD 1021, Natural Phenomena Hazards Performance Categorization Guidelines for SSC
18. Savannah River Site Engineering Standard 01060, SRS Structural Design Criteria
19. Savannah River Site Engineering Standard 01061, Qualification of Systems, Equipment & Components for Natural Phenomena Hazards
20. ANS 2.26, Categorization of Nuclear Facility SSC for Seismic Design

21. Consolidated Hazards Analysis For The Waste Solidification Building. WSRC-TR-2007-00134, Rev. 1, Washington Savannah River Company, Aiken SC, June 2008.
22. Quality Assurance Management Plan, WSRC-RP-92-225, Rev. 20, Washington Savannah River Company, Aiken SC, December 2007.
23. Project Fire Hazards Analysis for Waste Solidification Building, F-FHA-F-00033, Rev C, Washington Savannah River Company, Aiken SC, December 2007.
24. Waste Solidification Building System Design Description for Balance of Plant Support System – Safeguards and Security, G-SYD-F-00023, Washington Savannah River Company, Aiken SC, May 2008.
25. Conrad, D. T., Waste Solidification Building IN-PROCESS DESIGN REVIEW, NNP-WSB-2007-00030, Washington Savannah River Company, Aiken SC, October 2007
26. Final Design Review Report, U-DRR-F-00002, Washington Savannah River Company, Aiken SC, October 2007
27. Waste Solidification Building Environmental Evaluation Checklist, PBU-F-2006-0002 Rev. 0, July 25, 2006.
28. ESH-EPG-2008-00051, Interoffice Memorandum, To: Sterling Robertson, From: Keith Dyer, Waste Solidification Building Notice of NEPA Approval, April 10, 2008.
29. Waste Solidification Building First Level Radiological Zone Floor Plan, A-AD-F-2520
30. Waste Solidification Building Second Level Radiological Zone Floor Plan, A-AD-F-2521
31. Waste Solidification Building First Level Contamination Zone Floor Plan, A-AD-F-2522
32. Waste Solidification Building Second Level Contamination Zone Floor Plan, A-AD-F-2523
33. Waste Solidification Building Enlarged Floor Plan Equipment Radiation & Contamination Zones, A-AD-F-2524
34. Standards/Requirements Identification Document, WSRC-RP-94-1268, Washington Savannah River Company, Aiken, SC
35. Robertson, S. J, WSB Engineering Designated Approvers, NNP-WSB-2008-00021, June 2008

Table 18-1 DOE-STD-3009-94 Methodology vs. DOE-STD-1189-2008 Methodology 100m Dose Comparison

Event	MAR	MAR Unit	ARF*RF	Source Term	100m DCF (3009)	100m DCF (1189)	MOI DCF	CW (3009)[1]	CW (1189)[1]	MOI
Cementation										
CEM-1-001	1444.8	Ci Am-241	2.00E-03	2.89E+00	16	1.19E+02	0.0582	4.62E+01	3.44E+02	1.68E-01
CEM-1-002	154.8	Ci Am-241	2.00E-03	3.10E-01	16	1.19E+02	0.0582	4.95E+00	3.68E+01	1.80E-02
CEM-1-003	0.001467	Ci Am-241	2.00E-03	2.93E-06	67.4	5.21E+02	0.254	1.98E-04	1.53E-03	7.45E-07
CEM-2-001	154.8	Ci Am-241	7.00E-04	1.08E-01	22.7	1.19E+02	0.253	2.46E+00	1.29E+01	2.74E-02
CEM-2-002	154.8	Ci Am-241	2.00E-03	3.10E-01	22.7	1.19E+02	0.253	7.03E+00	3.68E+01	7.83E-02
CEM-3-001	154.8	Ci Am-241	1.00E-04	1.55E-02	22.7	1.19E+02	0.0855	3.51E-01	1.84E+00	1.32E-03
CEM-3-002	154.8	Ci Am-241	1.00E-04	1.55E-02	22.7	1.19E+02	0.0855	3.51E-01	1.84E+00	1.32E-03
CEM-3-003	154.8	Ci Am-241	1.00E-04	1.55E-02	22.7	1.19E+02	0.0855	3.51E-01	1.84E+00	1.32E-03
CEM-3-004	154.8	Ci Am-241	1.00E-04	1.55E-02	22.7	1.19E+02	0.0855	3.51E-01	1.84E+00	1.32E-03
CEM-3-005	154.8	Ci Am-241	1.00E-04	1.55E-02	22.7	1.19E+02	0.0855	3.51E-01	1.84E+00	1.32E-03
CEM-4-001	N/A	N/A	N/A	N/A	N/A	N/A	N/A	Neg	Neg	Neg
Chemical Storage										
CSA-1-001	Qualitative									
CSA-3-001	Qualitative									
CSA-3-002	Qualitative									
CSA-3-003	Qualitative									
CSA-3-004	Qualitative									
CSA-3-005	Qualitative									
CSA-3-006	Qualitative									
CSA-3-007	Qualitative									
Facility Wide										
FW-1-001	63000	Ci Am-241	2.00E-03	1.26E+02	16	1.19E+02	0.0582	2.02E+03	1.50E+04	7.33E+00
FW-6-001	63000	Ci Am-241	2.00E-03	1.26E+02	16	1.19E+02	0.0582	2.02E+03	1.50E+04	7.33E+00

Table 18-1 DOE-STD-3009-94 Methodology vs. DOE-STD-1189-2008 Methodology 100m Dose Comparison

Event	MAR	MAR Unit	ARF*RF	Source Term	100m DCF (3009)	100m DCF (1189)	MOI DCF	CW (3009)[1]	CW (1189)[1]	MOI
FW-6-002	63000	Ci Am-241	2.00E-03	1.26E+02	16	1.19E+02	0.0582	2.02E+03	1.50E+04	7.33E+00
FW-6-003	63000	Ci Am-241	1.00E-04	6.30E+00	22.7	1.19E+02	0.0855	1.43E+02	7.50E+02	5.39E-01
FW-6-004	63000	Ci Am-241	2.00E-03	1.26E+02	16	1.19E+02	0.0582	2.02E+03	1.50E+04	7.33E+00
FW-6-005	N/A	N/A	N/A	N/A	N/A	N/A	N/A	N/A	N/A	N/A
FW-7-001	1.1	Ci Am-241	1.00E-04	1.10E-04	4.05	2.15E+01	0.0155	4.46E-04	2.37E-03	1.71E-06
	320	PEC	1.00E-04	3.20E-02	0.54	2.83E+00	0.00236	1.73E-02	9.06E-02	7.55E-05
	7430	Ci Am-241	7.00E-05	5.20E-01	0.66	4.91E+00	0.00240	3.43E-01	2.55E+00	1.25E-03
							Total	**3.56E-01**	**2.62E+00**	**1.31E-03**
FW-7-002	63000	Ci Am-241	1.00E-04	6.30E+00	22.7	1.19E+02	0.0855	1.43E+02	7.50E+02	5.39E-01
	1.1	Ci Am-241	1.00E-04	1.10E-04	98.3	5.21E+02	0.376	1.08E-02	5.73E-02	4.14E-05
							Total	**1.43E+02**	**7.50E+02**	**5.39E-01**
FW-7-003	1444.8	Ci Am-241	1.00E-04	1.44E-01	22.7	1.19E+02	0.0855	3.28E+00	1.72E+01	1.24E-02
	1.1	Ci Am-241	1.00E-04	1.10E-04	98.3	5.21E+02	0.376	1.08E-02	5.73E-02	4.14E-05
							Total	**3.29E+00**	**1.73E+01**	**1.24E-02**
FW-7-004	N/A[2]	Ci Am-241	N/A	4.76E+01	22.7	1.19E+02	0.0855	1.08E+03	5.66E+03	4.07E+00
FW-7-005	63000	Ci Am-241	2.00E-03	1.26E+02	16	1.19E+02	0.0582	2.02E+03	1.50E+04	7.33E+00
High Activity Line										
HAL-1-001	63000	Ci Am-241	2.00E-03	1.26E+02	16	1.19E+02	0.0582	2.02E+03	1.50E+04	7.33E+00
HAL-1-002	6.88	Ci Am-241	2.00E-03	1.38E-02	16	1.19E+02	0.0582	2.20E-01	1.64E+00	8.01E-04
HAL-2-001	6.88	Ci Am-241	1.00E-04	6.88E-04	22.7	1.19E+02	0.0855	1.56E-02	8.19E-02	5.88E-05
HAL-2-002	6.88	Ci Am-241	1.00E-04	6.88E-04	22.7	1.19E+02	0.0855	1.56E-02	8.19E-02	5.88E-05
HAL-2-003	6.88	Ci Am-241	1.00E-04	6.88E-04	22.7	1.19E+02	0.0855	1.56E-02	8.19E-02	5.88E-05
HAL-2-004	20640	Ci Am-241	7.00E-02	1.44E+03	22.7	1.19E+02	0.0855	3.28E+04	1.72E+05	1.24E+02
HAL-2-004a	N/A[2]	Ci Am-241	N/A	4.76E+01	22.7	1.19E+02	0.0855	1.08E+03	5.66E+03	4.07E+00
HAL-2-005	N/A[2]	Ci Am-241	N/A	4.76E+01	22.7	1.19E+02	0.0855	1.08E+03	5.66E+03	4.07E+00
HAL-2-006	N/A[2]	Ci Am-241	N/A	4.76E+01	22.7	1.19E+02	0.0855	1.08E+03	5.66E+03	4.07E+00

Table 18-1 DOE-STD-3009-94 Methodology vs. DOE-STD-1189-2008 Methodology 100m Dose Comparison

Event	MAR	MAR Unit	ARF*RF	Source Term	100m DCF (3009)	100m DCF (1189)	MOI DCF	CW (3009)[1]	CW (1189)[1]	MOI
HAL-2-007	20640	Ci Am-241	1.00E-04	2.06E+00	22.7	1.19E+02	0.0855	4.69E+01	2.46E+02	1.76E-01
HAL-2-008	N/A[2]	Ci Am-241	N/A	9.52E-01	22.7	1.19E+02	0.0855	2.16E+01	1.13E+02	8.14E-02
HAL-3-001	154.8	Ci Am-241	1.00E-04	1.55E-02	22.7	1.19E+02	0.0855	3.51E-01	1.84E+00	1.32E-03
HAL-3-002	154.8	Ci Am-241	1.00E-04	1.55E-02	22.7	1.19E+02	0.0855	3.51E-01	1.84E+00	1.32E-03
HAL-3-003	20640	Ci Am-241	1.00E-04	2.06E+00	22.7	1.19E+02	0.0855	4.69E+01	2.46E+02	1.76E-01
HAL-3-003a	20640	Ci Am-241	1.19E-03	2.46E+01	22.7	1.19E+02	0.0855	5.58E+02	2.92E+03	2.10E+00
HAL-3-004	20640	Ci Am-241	1.00E-04	2.06E+00	22.7	1.19E+02	0.0855	4.69E+01	2.46E+02	1.76E-01
HAL-3-005	20640	Ci Am-241	1.00E-04	2.06E+00	22.7	1.19E+02	0.0855	4.69E+01	2.46E+02	1.76E-01
HAL-3-006	3125	Ci Am-241	1.00E-04	3.13E-01	22.7	1.19E+02	0.0855	7.09E+00	3.72E+01	2.67E-02
HAL-3-007	3125	Ci Am-241	1.00E-04	3.13E-01	22.7	1.19E+02	0.0855	7.09E+00	3.72E+01	2.67E-02
HAL-3-008	3125	Ci Am-241	1.00E-04	3.13E-01	22.7	1.19E+02	0.0855	7.09E+00	3.72E+01	2.67E-02
HAL-3-009	3440	Ci Am-241	1.00E-04	3.44E-01	22.7	1.19E+02	0.0855	7.81E+00	4.09E+01	2.94E-02
HAL-3-010	3440	Ci Am-241	1.00E-04	3.44E-01	22.7	1.19E+02	0.0855	7.81E+00	4.09E+01	2.94E-02
HAL-3-011	20640	Ci Am-241	1.00E-04	2.06E+00	22.7	1.19E+02	0.0855	4.69E+01	2.46E+02	1.76E-01
HAL-4-001	N/A	N/A	N/A	N/A	N/A	N/A	N/A	Neg	Neg	Neg
HAL-4-002	N/A	N/A	N/A	N/A	N/A	N/A	N/A	Neg	Neg	Neg
HAL-4-003	N/A	N/A	N/A	N/A	N/A	N/A	N/A	Neg	Neg	Neg
HAL-5-001	N/A	N/A	N/A	N/A	N/A	N/A	N/A	Neg	Neg	Neg
HAL-7-001	N/A	N/A	N/A	N/A	N/A	N/A	N/A	Neg	Neg	Neg
HAL-8-001	N/A	N/A	N/A	N/A	N/A	N/A	N/A	Neg	Neg	Neg
Laboratory										
LAB-2-001	Qualitative									
LAB-3-001	Qualitative									
LAB-3-002	Qualitative									
LAB-3-003	Qualitative									
LAB-3-004	0.1376	Ci Am-241	1.00E-04	1.38E-05	22.7	1.19E+02	0.0855	3.12E-04	1.64E-03	1.18E-06

Table 18-1 DOE-STD-3009-94 Methodology vs. DOE-STD-1189-2008 Methodology 100m Dose Comparison

Event	MAR	MAR Unit	ARF*RF	Source Term	100m DCF (3009)	100m DCF (1189)	MOI DCF	CW (3009)[1]	CW (1189)[1]	MOI
LAB-3-005	6.88	Ci Am-241	1.00E-04	6.88E-04	22.7	1.19E+02	0.0855	1.56E-02	8.19E-02	5.88E-05
LAB-3-006	6.88	Ci Am-241	1.00E-04	6.88E-04	22.7	1.19E+02	0.0855	1.56E-02	8.19E-02	5.88E-05
LAB-3-007	Qualitative									
LAB-4-001	Qualitative									
LAB-4-002	Qualitative									
LAB-4-003	Qualitative									
LAB-8-001	N/A									
LAB-8-002	N/A									
Low Activity Line										
LAL-2-001	1.1	Ci Am-241	1.00E-04	1.10E-04	98.3	5.21E+02	0.376	1.08E-02	5.73E-02	4.14E-05
LAL-2-002	1.1	Ci Am-241	1.00E-04	1.10E-04	98.3	5.21E+02	0.376	1.08E-02	5.73E-02	4.14E-05
LAL-2-003	1.1	Ci Am-241	1.00E-04	1.10E-04	98.3	5.21E+02	0.376	1.08E-02	5.73E-02	4.14E-05
LAL-2-004	1.1	Ci Am-241	7.00E-02	7.70E-02	98.3	5.21E+02	0.376	7.57E+00	4.01E+01	2.90E-02
LAL-2-004a	1.1	Ci Am-241	2.00E-03	2.20E-03	98.3	5.21E+02	0.376	2.16E-01	1.15E+00	8.27E-04
LAL-2-005	1.1	Ci Am-241	2.00E-03	2.20E-03	98.3	5.21E+02	0.376	2.16E-01	1.15E+00	8.27E-04
LAL-2-006	1.1	Ci Am-241	2.00E-03	2.20E-03	98.3	5.21E+02	0.376	2.16E-01	1.15E+00	8.27E-04
LAL-3-001	1.1	Ci Am-241	1.00E-04	1.10E-04	98.3	5.21E+02	0.376	1.08E-02	5.73E-02	4.14E-05
LAL-3-002	1.1	Ci Am-241	1.00E-04	1.10E-04	98.3	5.21E+02	0.376	1.08E-02	5.73E-02	4.14E-05
LAL-3-003	1.1	Ci Am-241	1.00E-04	1.10E-04	98.3	5.21E+02	0.376	1.08E-02	5.73E-02	4.14E-05
LAL-3-004	1.1	Ci Am-241	1.00E-04	1.10E-04	98.3	5.21E+02	0.376	1.08E-02	5.73E-02	4.14E-05
LAL-3-005	1.1	Ci Am-241	1.00E-04	1.10E-04	98.3	5.21E+02	0.376	1.08E-02	5.73E-02	4.14E-05
LAL-3-006	1.1	Ci Am-241	1.00E-04	1.10E-04	98.3	5.21E+02	0.376	1.08E-02	5.73E-02	4.14E-05
LAL-3-007	Qualitative									
LAL-3-008	1.1	Ci Am-241	1.00E-04	1.10E-04	98.3	5.21E+02	0.376	1.08E-02	5.73E-02	4.14E-05
LAL-3-009	1.1	Ci Am-241	1.00E-04	1.10E-04	98.3	5.21E+02	0.376	1.08E-02	5.73E-02	4.14E-05
LAL-3-010	Qualitative									
LAL-4-001	Qualitative									

Table 18-1 DOE-STD-3009-94 Methodology vs. DOE-STD-1189-2008 Methodology 100m Dose Comparison

Event	MAR	MAR Unit	ARF*RF	Source Term	100m DCF (3009)	100m DCF (1189)	MOI DCF	CW (3009)[1]	CW (1189)[1]	MOI
LAL-5-001	N/A									
LAL-7-001	1.1	Ci Am-241	1.00E-04	1.10E-04	98.3	5.21E+02	0.376	1.08E-02	5.73E-02	4.14E-05
LAL-8-001	N/A									
Miscellaneous										
MIS-2-001	N/A									
MIS-2-002	N/A									
MIS-2-003	N/A									
MIS-8-001	N/A									
Transfer Lines										
TL-2-001	1.1	Ci Am-241	2.00E-03	2.20E-03	98.3	5.21E+02	0.376	2.16E-01	1.15E+00	8.27E-04
TL-2-002	Qualitative									
TL-3-001	1.1	Ci Am-241	2.00E-03	2.20E-03	98.3	5.21E+02	0.376	2.16E-01	1.15E+00	8.27E-04
TL-3-002	7017.6	Ci Am-241	1.00E-04	7.02E-01	22.7	1.19E+02	0.0855	1.59E+01	8.35E+01	6.00E-02
TL-3-003	1.1	Ci Am-241	2.00E-03	2.20E-03	98.3	5.21E+02	0.376	2.16E-01	1.15E+00	8.27E-04
TL-3-004	7017.6	Ci Am-241	1.00E-04	7.02E-01	22.7	1.19E+02	0.0855	1.59E+01	8.35E+01	6.00E-02
TL-3-005	7017.6	Ci Am-241	1.00E-04	7.02E-01	22.7	1.19E+02	0.0855	1.59E+01	8.35E+01	6.00E-02
TL-4-001	Qualitative									
TL-7-001	1.1	Ci Am-241	2.00E-03	2.20E-03	98.3	5.21E+02	0.376	2.16E-01	1.15E+00	8.27E-04
TL-7-002	7017.6	Ci Am-241	1.00E-04	7.02E-01	22.7	1.19E+02	0.0855	1.59E+01	8.35E+01	6.00E-02
Ventilation										
VENT-3-001	Qualitative									
VENT-3-002	Qualitative									

Table 18-1 DOE-STD-3009-94 Methodology vs. DOE-STD-1189-2008 Methodology 100m Dose Comparison

Event	MAR	MAR Unit	ARF*RF	Source Term	100m DCF (3009)	100m DCF (1189)	MOI DCF	CW (3009)[1]	CW (1189)[1]	MOI
Waste Handling										
WH-1-001	80	PEC Pu-239	1.30E-03	1.04E-01	8.97	6.67E+01	0.0571	9.33E-01	6.94E+00	5.38E-03
WH-1-002	320	PEC Pu-239	1.30E-03	4.16E-01	8.97	6.67E+01	0.0571	3.73E+00	2.77E+01	2.38E-02
	7430	Ci Am-241	1.00E-06	7.43E-03	16	1.19E+02	0.0582	1.19E-01	8.84E-01	4.32E-04
							Total	**3.85E+00**	**2.86E+01**	**2.42E-02**
WH-1-003	320	PEC Pu-239	5.00E-04	1.60E-01	8.97	6.67E+01	0.0571	1.44E+00	1.07E+01	9.14E-03
WH-1-004	160	PEC Pu-239	5.00E-04	8.00E-02	8.97	6.67E+01	0.0571	7.18E-01	5.34E+00	4.57E-03
WH-1-005	80	PEC Pu-239	5.00E-04	4.00E-02	8.97	6.67E+01	0.0571	3.59E-01	2.67E+00	2.28E-03
WH-1-006	80	PEC Pu-239	5.00E-04	4.00E-02	8.97	6.67E+01	0.0571	3.59E-01	2.67E+00	2.28E-03
WH-2-001	80	PEC Pu-239	1.70E-03	1.36E-01	13.1	6.87E+01	0.0834	1.78E+00	9.34E+00	1.13E-02
WH-2-002	80	PEC Pu-239	1.70E-03	1.36E-01	13.1	6.87E+01	0.0834	1.78E+00	9.34E+00	1.13E-02
WH-3-001	320	PEC Pu-239	1.00E-04	3.20E-02	13.1	6.87E+01	0.0834	4.19E-01	2.20E+00	2.67E-03
WH-3-002	320	PEC Pu-239	1.00E-04	3.20E-02	13.1	6.87E+01	0.0834	4.19E-01	2.20E+00	2.67E-03
WH-3-003	80	PEC Pu-239	1.00E-04	8.00E-03	13.1	6.87E+01	0.0834	1.05E-01	5.50E-01	6.67E-04
WH-4-001	Qualitative									
WH-4-002	Qualitative									
WH-8-001	N/A									

1) Shaded cells indicate events where evaluation criteria are exceeded. Darker shading in the 1189 column indicates an event where evaluation criteria are exceeded for 1189 methodology that were not exceeded under 3009 methodology.
2) TNT Equivalent model was used to determine Source Term.

Table 18-2 WSB PDSA Compliance with 3009 and 1189 Format and Content Requirements

DOE-STD-3009 (Section Layout)	WSB PDSA Compliance with DOE-STD-3009	WSB PDSA Compliance with DOE-STD-1189	DOE-STD-3009 and DOE-STD-1189 Differences
Executive Summary			
E.1 Facility Background and Mission	Complies with DOE-STD-3009 format and content	Complies with DOE-STD-1189-2008 format and content	None
E.2 Facility Overview	Complies with DOE-STD-3009 format. Should add description of relationship and interfaces with nearby facilities	Complies with DOE-STD-1189-2008 format and content	None
E.3 Facility Hazard Categorization	Complies with DOE-STD-3009 format and content	Complies with DOE-STD-1189-2008 format and content	None
E.4 Safety Analysis Overview	Complies with DOE-STD-3009 format and content. PDSA includes subsections on HA, AA, significant hazards associated with WSB processes, major preventive and mitigative features, and analysis application.	Complies with DOE-STD-1189-2008 format. Although the PDSA identifies SS controls, it does not thoroughly summarize PC and seismic design category. The SS equipment safety requirements have been documented in J-ESR-F-00027(I&C), M-ESR-F-00128 (Process Equipment), M-ESR-F-00131 (ACVS), F-ESR-F-00161 (Fire Protection Equipment), and C-ESR-F-00044 (Civil).	In addition to requiring identification of the main preventive and mitigative features, DOE-STD-1189-2008 requires a summary of their functional classification (i.e., SC or SS), and associated NPH performance category, and seismic design category.
E.5 Organizations	Complies with DOE-STD-3009 format and content	Complies with DOE-STD-1189-2008 format and content	None
E.6 Safety Analysis Conclusions	Complies withDOE-STD- 3009 format and content	DOE-STD-1189-2008 entitles this section “Safety-in-Design Conclusions”. PDSA essentially complies with the DOE-STD-1189-2008 content.	DOE-STD-3009 requires identification of any issues significant to the SB that require further resolution or which may delay documenting the SB or potential cost and schedule impacts. DOE-STD-1189-2008 requires identification of any Safety-in-Design issues significant to project risk (e.g., cost and schedule).
E.7 DSA Organization	Complies with DOE-STD-3009 format and content	Complies with DOE-STD-1189-2008 format and content	None

Table 18-2 WSB PDSA Compliance with 3009 and 1189 Format and Content Requirements

DOE-STD-3009 (Section Layout)	WSB PDSA Compliance with DOE-STD-3009	WSB PDSA Compliance with DOE-STD-1189	DOE-STD-3009 and DOE-STD-1189 Differences
Chapter 1 – Site Characteristics	(PDSA references SRS DSA Support Document – Site Characteristics and Program Descriptions for much of this information)		
1.1 Introduction	Complies with DOE-STD-3009 format and content	Complies with DOE-STD-1189-2008 format and content	None
1.2 Requirements	Complies with DOE-STD-3009 format and content	1189 does not contain this section	None
1.3 Site Description	Complies with DOE-STD-3009 format and content	Meets content of DOE-STD-1189-2008 Section 1.2	None
1.3.1 Geography	Complies with DOE-STD-3009 format and content	Meets content of DOE-STD-1189-2008 Section 1.2.1	None
1.3.2 Demography	Complies with DOE-STD-3009 format and content. PDSA includes subsections on Worker Populations and Nearby Residences, Major Population Centers, and Major Institutions.	Meets content of DOE-STD-1189-2008 Section 1.2.1	None
1.4 Environmental Description	Complies with DOE-STD-3009 format and content	Meets content of DOE-STD-1189-2008 Section 1.3	None
1.4.1 Meteorology	Complies with DOE-STD-3009 format and content	Meets content of DOE-STD-1189-2008 Section 1.3.1	None
1.4.2 Hydrology	Complies with DOE-STD-3009 format and content	Meets content of DOE-STD-1189-2008 Section 1.3.2	None
1.4.3 Geology	Complies with DOE-STD-3009 format and content	Meets content of DOE-STD-1189-2008 Section 1.3.3	None
1.5 Natural Event Accident Initiators	Complies with DOE-STD-3009 format and content	Meets content of DOE-STD-1189-2008 Section 1.4	None
1.6 Man-Made External Accident Initiators	Complies with DOE-STD-3009 format and content	Meets content of DOE-STD-1189-2008 Section 1.5	None
1.7 Nearby Facilities	Complies with DOE-STD-3009 format and content	Meets content of DOE-STD-1189-2008 Section 1.6	None

Table 18-2 WSB PDSA Compliance with 3009 and 1189 Format and Content Requirements

DOE-STD-3009 (Section Layout)	WSB PDSA Compliance with DOE-STD-3009	WSB PDSA Compliance with DOE-STD-1189	DOE-STD-3009 and DOE-STD-1189 Differences
1.8 Validity of Existing Environmental Analyses	Complies with DOE-STD-3009 format and content by referencing the SRS DSA Support Document – Site Characteristics and Program Descriptions and the NRC Environmental Impact Statement	This may meet the content of the corresponding DOE-STD-1189-2008 Section 1.7, entitled *Evaluation of Siting Criteria* through references to the SRS DSA Support Document and NRC EIS	None
Chapter 2 – Facility Description		1189 Chapter 2 is entitled, *Facility Description – Preliminary Design*	
2.1 Introduction	Complies with DOE-STD-3009 format and content	Complies with DOE-STD-1189-2008 format and content	
2.2 Requirements	Complies with DOE-STD-3009 format and content	Complies with DOE-STD-1189-2008 format and content	Only difference is that DOE-STD-1189-2008 states to identify requirements for establishing adequate "Safety-in-Design" instead of "safety basis."
2.3 Facility Overview	Complies with DOE-STD-3009 format and content. PDSA includes subsections on the background, mission and general facility description.	Complies with DOE-STD-1189-2008 format and content	None
2.4 Facility Structure	Complies with DOE-STD-3009 format and content. PDSA includes subsections on the process building, exhaust stack, and process chemical storage/delivery.	Complies with DOE-STD-1189-2008 format and content	1189 requests information on the facility as it pertains to "confinement and the hazard analysis", while 3009 as it pertains to "hazard and accident analysis."
2.5 Process Description	Complies with DOE-STD-3009 format and content. PDSA includes subsections on waste receipt, concentration, neutralization, cementation, waste staging and shipment, the analytical laboratory system, and the process control system.	Complies with DOE-STD-1189-2008 format and content. A P&I diagram level detail was used in the PDSA.	1189 indicates P&I diagram level of detail, while 3009 states that the intent is to supply information to provide an understanding of the assessment of normal operations, the safety analysis and its conclusions, and insight into the types of operations for which a SMP must be devised.

Table 18-2 WSB PDSA Compliance with 3009 and 1189 Format and Content Requirements

DOE-STD-3009 (Section Layout)	WSB PDSA Compliance with DOE-STD-3009	WSB PDSA Compliance with DOE-STD-1189	DOE-STD-3009 and DOE-STD-1189 Differences
2.6 Confinement Systems	Complies with DOE-STD-3009 format and content. PDSA includes subsections on all the process vessels, transfer lines, ventilation systems, enclosures and gloveboxes, etc.	Section 2.6 in DOE-STD-1189-2008 is entitled *Summary of SC and SS SSCs*. PDSA Sections 2.6 and 2.7 together provide the detail requested for this section.	The formatting or location of this information varies.
2.7 Safety Support Systems	Complies with DOE-STD-3009 format and content. PDSA includes subsections on the evaporator interlocks, fire barrier walls, fire suppression system, and the standby power system.	Meets content of DOE-STD-1189-2008 Section 2.6	1189 Section 2.6 requires this information.
2.8 Utility Distribution Systems	Complies with DOE-STD-3009 format and content. PDSA includes subsections on electrical distribution and the various water and sewer systems.	Meets content of DOE-STD-1189-2008 Section 2.7	1189 Section 2.7 requires this information.
2.9 Auxiliary Systems and Support Facilities	Complies with DOE-STD-3009 format and content. PDSA includes subsections on instrument and breathing air, material handling, communications, fluid pumping, and safety and health monitoring.	Meets content of DOE-STD-1189-2008 Section 2.8	1189 Section 2.8 requires this information.
(Chapter 16 of 3009 covers D&D)	PDSA discusses D&D in Chapter 16	PDSA Chapter 16 covers Section 2.9 in DOE-STD-1189-2008 entitled *Design Provisions for D&D* provides information regarding design provisions for D&D	D&D is covered in Chapter 16 of 3009 and Section 2.9 of 1189
Chapter 3 – Hazard and Accident Analyses		1189 Chapter 3 is entitled, *Hazard Analyses, Accident Analysis, and Control Selection*	In general, 3009 and DOE-STD-1189-2008 cover similar information but the organization of information varies considerably
3.1 Introduction	Complies with DOE-STD-3009 format and content	Complies with DOE-STD-1189-2008 format and content	None

Table 18-2 WSB PDSA Compliance with 3009 and 1189 Format and Content Requirements

DOE-STD-3009 (Section Layout)	WSB PDSA Compliance with DOE-STD-3009	WSB PDSA Compliance with DOE-STD-1189	DOE-STD-3009 and DOE-STD-1189 Differences
3.2 Requirements	Complies with DOE-STD-3009 format and content	N/A	No "Requirements" section in Chapter 3 of 1189
3.3 Hazard Analysis	Introductory material is sufficient to meet DOE-STD-3009 format and content, although DOE-STD-3009 provides additional description with a flowchart for performing a hazard analysis	Complies with DOE-STD-1189-2008 format and content	None
3.3.1 Methodology	Complies with DOE-STD-3009 format and content	Meets content of DOE-STD-1189-2008 Section 3.2.1	None
3.3.1.1 Hazard Identification	Complies with DOE-STD-3009 format and content. PDSA includes subsections on division of the facility, information gathering, screening of common hazards, and reviewing past operating history.	Agrees with DOE-STD-1189-2008 hazard identification methodology	Hazard identification methodology is discussed in DOE-STD-1189-2008 Sections 3.2.1, *Hazard Analysis Methods* and 3.2.2, *Accident Consequence Analysis Methods*, which reference Appendix G, *HA Table Development*
3.3.1.2 Hazard Evaluation	PDSA Section 3.3.1.2 is *Hazard Categorization*. The content of this section is met by PDSA Section 3.3.1.3, *Hazard Evaluation*, which describes the columns of the HE table.	Agrees with DOE-STD-1189-2008 hazard evaluation methodology	Hazard evaluation methodology is described in DOE-STD-1189-2008 Sections 3.2.1, *Hazard Analysis Methods* and 3.2.2, *Accident Consequence Analysis Methods*, which reference Appendix G, *HA Table Development*
3.3.2 Hazard Analysis Results	No content specified in DOE-STD-3009 (in introduction)	N/A	None
3.3.2.1 Hazard Identification	Complies with DOE-STD-3009 format and content. PDSA includes subsections on general hazards, radiological inventory, and the chemical inventory.	PDSA meets the requirements of the hazard identification	Hazard identification is discussed in DOE-STD-1189-2008 Section 3.3 and the HA report
3.3.2.2 Hazard Categorization	Complies with DOE-STD-3009 format and content. PDSA includes subsections on the radiological, chemical and criticality results	Meets content of DOE-STD-1189-2008 Section 3.4	None

Table 18-2 WSB PDSA Compliance with 3009 and 1189 Format and Content Requirements

DOE-STD-3009 (Section Layout)	WSB PDSA Compliance with DOE-STD-3009	WSB PDSA Compliance with DOE-STD-1189	DOE-STD-3009 and DOE-STD-1189 Differences
3.3.2.3 Hazard Evaluation	Complies with DOE-STD-3009 format and content by referencing the CHA for details on the hazard evaluation.	PDSA Meets The Intent Of DOE-STD-1189-2008 Section 3.3.	Hazard evaluation is covered in DOE-STD-1189-2008 Section 3.3 and the HA report prepared per Appendix G
3.3.2.3.1 Planned Design and Oper. Safety Improvements	N/A. This section is not applicable. The WSB is currently in the design stage.	N/A	Planned improvements are not covered in 1189.
3.3.2.3.2 Defense in Depth	Complies with DOE-STD-3009 format and content. PDSA includes subsections on SSCs, ACs and TSRs.	PDSA meets the intent of 1189	DID is covered in the DOE-STD-1189-2008 Appendix D, *Additional Functional Classification Considerations*, with subsections D.1 *Selection and Classification of a Complete Control Set* and D.2 *Criteria for Selecting SS Major Contributors to Defense-in-Depth*
3.3.2.3.3 Worker Safety	Complies with DOE-STD-3009 format and content. PDSA includes subsections on variety of accident types at WSB.	PDSA meets the requirements of DOE-STD-1189-2008 Section 3.6 through Sections 3.3.2.3.2 and 3.3.2.3.3	1189 Section 3.6 summarizes significant worker hazards and controls
3.3.2.3.4 Environmental Protection	PSDA Section 3.3.3 provides the content of this section	N/A	1189 does not have a section on environmental protection in Chapter 3. The Environmental Protection Program is however listed as an SMP in Appendix A of Appendix I (PDSA format and content guide).
3.3.2.3.5 Accident Selection	PSDA Section 3.3.4 provides the content of this section	PDSA meets the intent of 1189	1189 Appendix G, *HA Table Development*, discusses binning and DBA selection and DOE-STD-1189-2008 Sections 3.2.3 and 3.5 summarize DBA selection methodology and results, respectively
3.4 Accident Analysis	Complies with DOE-STD-3009 format and content	PDSA meets the intent of 1189	1189 Sections 3.2.2, 3.2.3 and 3.5 cover accident analysis

Table 18-2 WSB PDSA Compliance with 3009 and 1189 Format and Content Requirements

DOE-STD-3009 (Section Layout)	WSB PDSA Compliance with DOE-STD-3009	WSB PDSA Compliance with DOE-STD-1189	DOE-STD-3009 and DOE-STD-1189 Differences
3.4.1 Methodology	Complies with DOE-STD-3009 format and content. PDSA includes subsections on scenario and ST development, LPF, NPHs and external hazards, consequence analysis, and major inputs and assumptions.	PDSA meets the intent of 1189	Covered in DOE-STD-1189-2008 Section 3.2.2 and Appendix A. DOE-STD-1189-2008 Appendix A refers to Appendix A of 3009 for guidance on public dose calculation.
3.4.2 Design Basis Accidents	Complies with DOE-STD-3009 format and content	Meets content of DOE-STD-1189-2008 Section 3.5	1189 Section 3.5 requires this information
3.4.2.X [Applicable DBA]	Complies with DOE-STD-3009 format and content	Corresponds to DOE-STD-1189-2008 Section 3.5.X	1189 Section 3.5.X requires this information
3.4.2.X.1 Scenario Development	Meets content. Since the DBAs were grouped by event category, the format is slightly different (3.4.2.Y.X.1), where Y is the event category and X is the specific event.	Meets content of DOE-STD-1189-2008 Section 3.5.X.1	1189 provides less guidance on this section than 3009
3.4.2.X.2 Source Term Analysis	Meets content. Format is slightly different (3.4.2.Y.X.2), where Y is the event category and X is the specific event.	PDSA does not include a description of the chemical release rate, concentrations, and the bases used to determine toxicological exposures Section 3.3.2 discusses the screening of chemical hazards and should meet the intent of 1189. This is also addressed by appendix E of the CHAP Report (Ref. 21)	1189 Section 3.5.X.2, *Analysis of Radiological Source Term and/or Chemical Exposure*, corresponds to this section. DOE-STD-1189-2008 also requires a description of the chemical release rate, concentrations, and the bases used to determine toxicological exposures.

Table 18-2 WSB PDSA Compliance with 3009 and 1189 Format and Content Requirements

DOE-STD-3009 (Section Layout)	WSB PDSA Compliance with DOE-STD-3009	WSB PDSA Compliance with DOE-STD-1189	DOE-STD-3009 and DOE-STD-1189 Differences
3.4.2.X.3 Consequence Analysis	Meets content. Format is slightly different (3.4.2.Y.X.3), where Y is the event category and X is the specific event.	PDSA does not discuss chemical consequences in this section. Section 3.3.2 discusses the screening of chemical hazards and should meet the intent of 1189. This is also addressed by appendix E of the CHAP Report (Ref. 21)	Consequence analysis is discussed in DOE-STD-1189-2008 Section 3.5.X.2. Radiological source terms and/or chemical exposures are compared to classification guidelines and a "yes" or "no" assessment is made as to whether there is a significant hazard to the facility worker. 3009 does not discuss chemical consequences in this section, but they do cover radiological consequences to the public and environment, unlike 1189.
3.4.2.X.4 Comparison to the Evaluation Guideline	Meets content. Format is slightly different (3.4.2.Y.X.4), where Y is the event category and X is the specific event.	Meets the content of 1189	Comparison to classification guidelines is done in DOE-STD-1189-2008 Section 3.5.X.2. Design requirements and control selection/classification that could prevent or mitigate the accident are covered in DOE-STD-1189-2008 Sections 3.5.X.3 and 3.5.X.4. 3009 requires a summary assessment of the significance of the exceedance and administrative and/or engineered controls whose implementation would prevent or mitigate the accident sequence.
3.4.2.X.5 Summary of SC SSCs, SACs and TSR Controls	Meets content. Format is slightly different (3.4.2.Y.X.5), where Y is the event category and X is the specific event. None of the accidents at WSB have unmitigated consequences that challenge the offsite EG, therefore no SC controls are required.	PDSA meets the requirements of DOE-STD-1189-2008 Section 3.5.1.4 in Sections 3.4.2.Y.X.4 and 3.4.2.Y.X.5	Control selection and classification is discussed in DOE-STD-1189-2008 Section 3.5.1.4, which would include SC controls
3.4.3 Beyond Design Basis Accidents	Complies with DOE-STD-3009 format and content. PDSA includes subsections evaluating a seismic and explosion BDBA event.	Meets content of DOE-STD-1189-2008 Section 3.8	This is covered in DOE-STD-1189-2008 Section 3.8

Table 18-2 WSB PDSA Compliance with 3009 and 1189 Format and Content Requirements

DOE-STD-3009 (Section Layout)	WSB PDSA Compliance with DOE-STD-3009	WSB PDSA Compliance with DOE-STD-1189	DOE-STD-3009 and DOE-STD-1189 Differences
		PDSA covers this information in Chapters 4 and 5	1189 contains Section 3.7, *Summary of Safety Functions and SSCs and SACs*. This section provides a summary (e.g., table) listing the safety functions and the SSCs and SACs selected to provide them. For SSCs, provide the safety classification, seismic design criteria, and other NP design criteria. 3009 provides this summary information in Chapters 4 and 5.
Chapter 4 – Safety Structures, Systems, and Components		1189 Chapter 4 is entitled, *SSCs for Preliminary Design*	
4.1 Introduction	Complies with DOE-STD-3009 format and content	Complies with DOE-STD-1189-2008 format and content	None
4.2 Requirements	Complies with DOE-STD-3009 format and content	N/A	No "Requirements" section in Chapter 4
4.3 Safety Class SSCs	Complies with DOE-STD-3009 format and content. WSB has no SC SSCs so this section has no subsections.	Meets content of DOE-STD-1189-2008 Section 4.2	3009 requires a summary list of SC SSCs, recommending a tabular format. DOE-STD-1189-2008 does not specifically require this.
4.3.X [Applicable SC SSC]	N/A	N/A. Corresponds to DOE-STD-1189-2008 Section 4.2.X	None
4.3.X.1 Safety Function	N/A	N/A. Corresponds to DOE-STD-1189-2008 Section 4.2.X.1	None
4.3.X.2 System Description	N/A	N/A. Corresponds to DOE-STD-1189-2008 Section 4.2.X.2	None
4.3.X.3 Functional Requirements	N/A	N/A. Corresponds to DOE-STD-1189-2008 Section 4.2.X.3, *Design and Functional Requirements*.	None
4.3.X.4 System Evaluation	N/A	N/A. Corresponds to DOE-STD-1189-2008 Section 4.2.X.4.	1189 provides more guidance than 3009 on this section, referencing specific ANSI/IEEE requirements, discussing SSCs interfaces, etc

Table 18-2 WSB PDSA Compliance with 3009 and 1189 Format and Content Requirements

DOE-STD-3009 (Section Layout)	WSB PDSA Compliance with DOE-STD-3009	WSB PDSA Compliance with DOE-STD-1189	DOE-STD-3009 and DOE-STD-1189 Differences
4.3.X.5 Controls (TSRs)	DOE-STD-3009 requires identification of those assumptions requiring TSRs to ensure performance of the safety function.	Corresponds to DOE-STD-1189-2008 Section 4.2.X.5.	1189 requires more detail, such as identifying the type of control (SL, LCS, LCO, SR) and inspections required for design features (mostly detail that is also required in Section 5)
4.4 Safety Significant SSCs	Complies with DOE-STD-3009 format and content	Meets content of DOE-STD-1189-2008 Section 4.3	3009 requires a summary list of SS SSCs, recommending a tabular format. DOE-STD-1189-2008 does not specifically require this.
4.4.X [Applicable SS SSC]	Complies with DOE-STD-3009 format and content.	Meets content of DOE-STD-1189-2008 Section 4.3.X	None
4.4.X.1 Safety Function	Complies with DOE-STD-3009 content. Since the SSCs were grouped by area, the format is slightly different (4.4.Y.X.1), where X is the applicable SSC within area Y.	Meets content of DOE-STD-1189-2008 Section 4.4.X.1. Note that the subsections under 4.3.X are mis-numbered as Sections 4.4.X.1, 4.4.X.2, etc.	None
4.4.X.2 System Description	Complies with DOE-STD-3009 content	Meets content of DOE-STD-1189-2008 Section 4.4.X.2	3009 provides more explanation on what descriptive detail to include
4.4.X.3 Functional Requirements	Complies with DOE-STD-3009 content	Meets content of DOE-STD-1189-2008 Section 4.4.X.3	3009 provides more clarification on Functional Requirements
4.4.X.4 System Evaluation	Complies with DOE-STD-3009 content	Meets content of DOE-STD-1189-2008 Section 4.4.X.4	3009 provides more clarification on Functional Requirements. DOE-STD-1189-2008 provides more examples of what the evaluation of SS SSCs should address (as specified in DOE G 420.1-1).
4.4.X.5 Controls (TSRs)	Complies with DOE-STD-3009 content. DOE-STD-3009 requires identification of those assumptions requiring TSRs to ensure performance of the safety function.	Meets content of DOE-STD-1189-2008 Section 4.4.X.5	1189 requires more detail, such as identifying the type of control (SL, LCS, LCO, SR) and inspections required for design features (mostly detail that is also required in Section 5)

Table 18-2 WSB PDSA Compliance with 3009 and 1189 Format and Content Requirements

DOE-STD-3009 (Section Layout)	WSB PDSA Compliance with DOE-STD-3009	WSB PDSA Compliance with DOE-STD-1189	DOE-STD-3009 and DOE-STD-1189 Differences
4.5 Specific Administrative Control	Although most of the information required for SAC specification (safety function, description, functional requirements, evaluation, and controls) is addressed, the format is not explicitly followed due to the limited available information (procedures, training, and final design)	Meets content of DOE-STD-1189-2008 Section 4.5.	None
4.5.X [Applicable SS SACs]	Complies with DOE-STD-3009 format and content	Complies with DOE-STD-1189-2008 format and content	None
4.5.X.1 Safety Function	Complies with DOE-STD-3009 content	Complies with DOE-STD-1189-2008 content	None
4.5.X.2 SAC Description	Complies with DOE-STD-3009 content in varying degrees for each SAC. Generally, the PDSA does not clearly justify the use of an SAC in lieu of safety SSCs, or provide a discussion regarding why SSC(s) are not plausible or practical for accomplishing the safety function.	Complies with DOE-STD-1189-2008 content in varying degrees for each SAC. Generally, the PDSA does not clearly justify the use of an SAC in lieu of safety SSCs, or provide a discussion regarding why SSC(s) are not plausible or practical for accomplishing the safety function.	None
4.5.X.3 Functional Requirements	Complies with DOE-STD-3009 content in varying degrees for each SAC	Complies with DOE-STD-1189-2008 content in varying degrees for each SAC	None
4.5.X.4 SAC Evaluation	Complies with DOE-STD-3009 content in varying degrees for each SAC	Complies with DOE-STD-1189-2008 content in varying degrees for each SAC	3009 mentions “adequacy of the description of the task in facility procedures” as a human performance factor to consider. DOE-STD-1189-2008 mentions “environmental conditions created by the accident, and in which operators may need to perform a safety task” as a human performance factor to consider.
4.5.X.5 Controls (TSRs)	Complies with DOE-STD-3009 content	Complies with DOE-STD-1189-2008 content	None

Table 18-2 WSB PDSA Compliance with 3009 and 1189 Format and Content Requirements

DOE-STD-3009 (Section Layout)	WSB PDSA Compliance with DOE-STD-3009	WSB PDSA Compliance with DOE-STD-1189	DOE-STD-3009 and DOE-STD-1189 Differences
Chapter 5 – Derivation of TSRs		1189 Chapter 5 is entitled, *Preliminary Derivation of TSRs*	
5.1 Introduction	Complies with DOE-STD-3009 format and content	Complies with DOE-STD-1189-2008 format and content.	1189 discusses the level of detail required in this chapter based on the stage of the design (PSDR, PDSA, DSA).
5.2 Requirements	Complies with DOE-STD-3009 format and content	N/A	No "Requirements" section in Chapter 5
5.3 TSR Coverage	Complies with DOE-STD-3009 format and content, although PDSA references Table 3.3-1 instead of providing a separate summary table(s) in this chapter.	Meets content of DOE-STD-1189-2008 Section 5.2, although PDSA references Table 3.3-1 instead of providing a separate summary table(s) in Chapter 5	3009 states controls are needed for public safety, worker safety and significant defense in depth. DOE-STD-1189-2008 states controls are needed for public and worker safety, but does not mention defense in depth.
5.4 Derivation of Facility Modes	Complies with DOE-STD-3009 format and content	Meets content of DOE-STD-1189-2008 Section 5.3	None
5.5 TSR Derivation	Complies with DOE-STD-3009 format and content	Meets content of DOE-STD-1189-2008 Section 5.4	None
5.5.X [Applicable Hazard/Feature/TSR "X"]	Complies with DOE-STD-3009 content. DOE-STD-3009 allows flexibility in formatting the subsections to the DSA preparer. PDSA includes the following subsections: 5.5.1 Engineered Controls – LCOs 5.5.2 ACs – LCOs 5.5.3 ACs – DAs 5.5.4 ACs – SMPs	Meets content of DOE-STD-1189-2008 Section 5.4.1. DOE-STD-1189-2008 also allows flexibility in formatting the subsections to the DSA preparer.	None
5.5.X.1 Safety Limits, LCSs, and LCOs	Complies with DOE-STD-3009 content	Meets content of DOE-STD-1189-2008 Section 5.4.X.1	None
5.5.X.2 Surveillance Requirements	Complies with DOE-STD-3009 content. PDSA has SRs listed under each LCO as applicable.	Meets content of DOE-STD-1189-2008 Section 5.4.X.2.	1189 states that facility design features required to implement SRs should be identified (e.g., instrumentation, equipment access)

Table 18-2 WSB PDSA Compliance with 3009 and 1189 Format and Content Requirements

DOE-STD-3009 (Section Layout)	WSB PDSA Compliance with DOE-STD-3009	WSB PDSA Compliance with DOE-STD-1189	DOE-STD-3009 and DOE-STD-1189 Differences
5.5.X.3 Administrative Controls	Complies with DOE-STD-3009 content. PDSA discusses ACs in Sections 5.5.2, 5.5.3 and 5.5.4.	N/A	1189 defers until operational safety basis development.
5.6 Design Features	Complies with DOE-STD-3009 format and content	Meets content of DOE-STD-1189-2008 Section 5.5	None
5.7 Interface with TSRs From Other Facilities	Complies with DOE-STD-3009 format and content	N/A	1189 does not contain a section discussing the interface with TSRs from other facilities.
Chapter 6 – Prevention of Inadvertent Criticality		1189 Chapter 6 is entitled, *Design for the Prevention of Inadvertent Crit.*	
6.1 Introduction	Complies with DOE-STD-3009 content. It has been determined that a criticality accident for the WSB is not credible if the waste acceptance criteria are met. Thus, a criticality safety program is not applicable.	Complies with DOE-STD-1189-2008 format and content	None
6.2 Requirements	N/A	N/A	No "Requirements" section in Chapter 6 in 1189.
6.3 Criticality Concerns	N/A	N/A. Section 6.2 in 1189.	None
6.4 Criticality Controls	N/A	N/A. Section 6.3 in 1189.	None
6.4.1 Engineering Controls	N/A	N/A. Section 6.3.1 in 1189.	1189 refers to "engineered design features", whereas 3009 refers to "safety design limits on engineered controls." 3009 also summarizes the configuration control program as it relates to the configuration of equipment used to store, handle, transport, or process fissile material.
6.4.2 Administrative Controls	N/A	N/A	3009 also requires discussion of ACs for reviewing and approving changes to process or system configurations. DOE-STD-1189-2008 states the level of detail required for ACs is based on the stage of the design (specific limits are not expected for the PDSA).

Table 18-2 WSB PDSA Compliance with 3009 and 1189 Format and Content Requirements

DOE-STD-3009 (Section Layout)	WSB PDSA Compliance with DOE-STD-3009	WSB PDSA Compliance with DOE-STD-1189	DOE-STD-3009 and DOE-STD-1189 Differences
6.4.3 Application of Double Contingency Principle	N/A	N/A	3009 references DOE O 420.1, while DOE-STD-1189-2008 references DOE O 420.1 and DOE-STD-3007-2007 (for guidelines on preparing CSEs)
6.5 Criticality Safety Program	N/A	N/A	1189 does not have a section on the Criticality Safety Program
6.5.1 Criticality Safety Organization	N/A	N/A	None
6.5.2 Criticality Safety Plans and Procs.	N/A	N/A	None
6.5.3 Criticality Safety Training	N/A	N/A	None
6.5.4 Determination of Operational Nuclear Crit. Limits	N/A	N/A	None
6.5.5 Criticality Safety Inspections/Audits	N/A	N/A	None
6.5.6 Criticality Infraction Reporting and Follow-Up	N/A	N/A	None
6.6 Criticality Instrumentation	N/A	N/A	1189 does not have a section on criticality instrumentation
Chapter 7 – Radiation Protection		A chapter-by-chapter description of SMPs that will support safe operation is not necessary for a PDSA. Appendix A of Appendix I in DOE-STD-1189-2008 provides an SMP roadmap used to track key design considerations included in preliminary design.	
7.1 Introduction	Complies with DOE-STD-3009 format and content	N/A	No corresponding chapter in DOE-STD-1189-2008 Format
7.2 Requirements	Complies with DOE-STD-3009format and content	N/A	No corresponding chapter in DOE-STD-1189-2008 Format
7.3 Radiation Protection Program and Organization	Complies with DOE-STD-3009format and content	N/A	No corresponding chapter in DOE-STD-1189-2008 Format
7.4 ALARA Policy and Program	Complies with DOE-STD-3009format and content	N/A	No corresponding chapter in DOE-STD-1189-2008 Format

Table 18-2 WSB PDSA Compliance with 3009 and 1189 Format and Content Requirements

DOE-STD-3009 (Section Layout)	WSB PDSA Compliance with DOE-STD-3009	WSB PDSA Compliance with DOE-STD-1189	DOE-STD-3009 and DOE-STD-1189 Differences
7.5 Radiological Protection Training	Complies with DOE-STD-3009format and content	N/A	No corresponding chapter in DOE-STD-1189-2008 Format
7.6 Radiation Exposure Control	Complies with DOE-STD-3009format and content	N/A	No corresponding chapter in DOE-STD-1189-2008 Format
7.6.1 Administrative Limits	Complies with DOE-STD-3009format and content	N/A	No corresponding chapter in DOE-STD-1189-2008 Format
7.6.2 Radiological Practices	Complies with DOE-STD-3009format and content	N/A	No corresponding chapter in DOE-STD-1189-2008 Format
7.6.3 Dosimetry	Complies with DOE-STD-3009format and content	N/A	No corresponding chapter in DOE-STD-1189-2008 Format
7.6.4 Respiratory Protection	Complies with DOE-STD-3009format and content	N/A	No corresponding chapter in DOE-STD-1189-2008 Format
7.7 Radiological Monitoring	Complies with DOE-STD-3009format and content	N/A	No corresponding chapter in DOE-STD-1189-2008 Format
7.8 Radiological Protection Instrumentation	Complies with DOE-STD-3009format and content	N/A	No corresponding chapter in DOE-STD-1189-2008 Format
7.9 Radiological Protection Record Keeping	Complies with DOE-STD-3009format and content	N/A	No corresponding chapter in DOE-STD-1189-2008 Format
7.10 Occupational Radiation Exposures	Complies with DOE-STD-3009format and content	N/A	No corresponding chapter in DOE-STD-1189-2008 Format
Chapter 8 – Hazardous Material Protection			
8.1 Introduction	Complies with DOE-STD-3009format and content	N/A	No corresponding chapter in DOE-STD-1189-2008 Format
8.2 Requirements	Complies with DOE-STD-3009format and content	N/A	No corresponding chapter in DOE-STD-1189-2008 Format
8.3 Hazardous Material Protection and Organization	Complies with DOE-STD-3009format and content	N/A	No corresponding chapter in DOE-STD-1189-2008 Format
8.4 ALARA Policy and Program	Complies with DOE-STD-3009content. PDSA section is entitled *"As Low As Practical" Philosophy*.	N/A	No corresponding chapter in DOE-STD-1189-2008 Format
8.5 Hazardous Material Training	Complies with DOE-STD-3009format and content	N/A	No corresponding chapter in DOE-STD-1189-2008 Format

Table 18-2 WSB PDSA Compliance with 3009 and 1189 Format and Content Requirements

DOE-STD-3009 (Section Layout)	WSB PDSA Compliance with DOE-STD-3009	WSB PDSA Compliance with DOE-STD-1189	DOE-STD-3009 and DOE-STD-1189 Differences
8.6 Hazardous Material Exposure Control	Complies with DOE-STD-3009format and content	N/A	No corresponding chapter in DOE-STD-1189-2008 Format
8.6.1 Hazardous Material Identification Program	Complies with DOE-STD-3009format and content	N/A	No corresponding chapter in DOE-STD-1189-2008 Format
8.6.2 Administrative Limits	Administrative control levels and exposure limits are covered in PDSA Section 8.6.4	N/A	No corresponding chapter in DOE-STD-1189-2008 Format
8.6.3 Occupational Medical Programs	Occupational Medical Programs are discussed in Sections 8.4.1, 8.6.2, 8.6.3 and 8.6.5	N/A	No corresponding chapter in DOE-STD-1189-2008 Format
8.6.4 Respiratory Protection	Respiratory protection is covered in Section 8.6.6 of the PDSA	N/A	No corresponding chapter in DOE-STD-1189-2008 Format
8.7 Hazardous Material Monitoring	Complies with DOE-STD-3009format and content	N/A	No corresponding chapter in DOE-STD-1189-2008 Format
8.8 Hazardous Material Protection Instrumentation	Complies with DOE-STD-3009format and content	N/A	No corresponding chapter in DOE-STD-1189-2008 Format
8.9 Hazardous Material Protection Record Keeping	Complies with DOE-STD-3009format and content	N/A	No corresponding chapter in DOE-STD-1189-2008 Format
8.10 Hazard Communication Program	Complies with DOE-STD-3009format and content	N/A	No corresponding chapter in DOE-STD-1189-2008 Format
8.11 Occupational Chemical Exposures	Complies with DOE-STD-3009format and content	N/A	No corresponding chapter in DOE-STD-1189-2008 Format
Chapter 9 – Radioactive and Hazardous Waste Mgmt.			
9.1 Introduction	Complies with DOE-STD-3009format and content	N/A	No corresponding chapter in DOE-STD-1189-2008 Format
9.2 Requirements	Complies with DOE-STD-3009format and content	N/A	No corresponding chapter in DOE-STD-1189-2008 Format
9.3 Rad. and Haz. Waste Mgmt. Program and Organization	Complies with DOE-STD-3009format and content	N/A	No corresponding chapter in DOE-STD-1189-2008 Format

Table 18-2 WSB PDSA Compliance with 3009 and 1189 Format and Content Requirements

DOE-STD-3009 (Section Layout)	WSB PDSA Compliance with DOE-STD-3009	WSB PDSA Compliance with DOE-STD-1189	DOE-STD-3009 and DOE-STD-1189 Differences
9.4 Rad. and Haz. Waste Streams and Sources	Complies with DOE-STD-3009content. PDSA section is entitled *Radioactive, Mixed, and Hazardous Waste Streams and Sources*.	N/A	No corresponding chapter in DOE-STD-1189-2008 Format
9.4.1 Waste Management Process	Complies with DOE-STD-3009format and content	N/A	No corresponding chapter in DOE-STD-1189-2008 Format
9.4.2 Waste Sources and Characteristics	Complies with DOE-STD-3009format and content	N/A	No corresponding chapter in DOE-STD-1189-2008 Format
9.4.3 Waste Handling or Treatment Systems	PDSA does not have a Section 9.4.3. Content is sufficient met in Sections 9.4.2.2 through 9.4.2.5 which discuss how the liquid and solid wastes are processed and sent for treatment.	N/A	No corresponding chapter in DOE-STD-1189-2008 Format
Chapter 10 – Initial Testing, In-Service Surv., and Maint.			
10.1 Introduction	Complies with DOE-STD-3009format and content	N/A	No corresponding chapter in DOE-STD-1189-2008 Format
10.2 Requirements	Complies with DOE-STD-3009format and content	N/A	No corresponding chapter in DOE-STD-1189-2008 Format
10.3 Initial Testing Program	Complies with DOE-STD-3009format and content	N/A	No corresponding chapter in DOE-STD-1189-2008 Format
10.4 In-Service Surveillance Program	Complies with DOE-STD-3009format and content	N/A	No corresponding chapter in DOE-STD-1189-2008 Format
10.5 Maintenance Program	Complies with DOE-STD-3009format and content	N/A	No corresponding chapter in DOE-STD-1189-2008 Format
Chapter 11 – Operational Safety			
11.1 Introduction	Complies with DOE-STD-3009format and content	N/A	No corresponding chapter in DOE-STD-1189-2008 Format
11.2 Requirements	Complies with DOE-STD-3009format and content	N/A	No corresponding chapter in DOE-STD-1189-2008 Format
11.3 Conduct of Operations	Complies with DOE-STD-3009format and content	N/A	No corresponding chapter in DOE-STD-1189-2008 Format

Table 18-2 WSB PDSA Compliance with 3009 and 1189 Format and Content Requirements

DOE-STD-3009 (Section Layout)	WSB PDSA Compliance with DOE-STD-3009	WSB PDSA Compliance with DOE-STD-1189	DOE-STD-3009 and DOE-STD-1189 Differences
11.4 Fire Protection	Complies with DOE-STD-3009format and content	N/A	No corresponding chapter in DOE-STD-1189-2008 Format
11.4.1 Fire Hazards	Complies with DOE-STD-3009format and content	N/A	No corresponding chapter in DOE-STD-1189-2008 Format
11.4.2 Fire Protection Program and Organization	Complies with DOE-STD-3009format and content	N/A	No corresponding chapter in DOE-STD-1189-2008 Format
11.4.3 Combustible Loading Control	Complies with DOE-STD-3009format and content	N/A	No corresponding chapter in DOE-STD-1189-2008 Format
11.4.4 Fire Fighting Capabilities	Complies with DOE-STD-3009format and content	N/A	No corresponding chapter in DOE-STD-1189-2008 Format
11.4.5 Fire Fighting Readiness Assurance	Complies with DOE-STD-3009format and content	N/A	No corresponding chapter in DOE-STD-1189-2008 Format
Chapter 12 – Procedures and Training			
12.1 Introduction	Complies with DOE-STD-3009format and content	N/A	No corresponding chapter in DOE-STD-1189-2008 Format
12.2 Requirements	Complies with DOE-STD-3009format and content	N/A	No corresponding chapter in DOE-STD-1189-2008 Format
12.3 Procedure Program	Complies with DOE-STD-3009format and content	N/A	No corresponding chapter in DOE-STD-1189-2008 Format
12.3.1 Development of Procedures	Complies with DOE-STD-3009format and content	N/A	No corresponding chapter in DOE-STD-1189-2008 Format
12.3.2 Maintenance of Procedures	Complies with DOE-STD-3009format and content	N/A	No corresponding chapter in DOE-STD-1189-2008 Format
12.4 Training Program	Complies with DOE-STD-3009format and content	N/A	No corresponding chapter in DOE-STD-1189-2008 Format
12.4.1 Development of Training	Complies with DOE-STD-3009format and content	N/A	No corresponding chapter in DOE-STD-1189-2008 Format
12.4.2 Maintenance of Training	Complies with DOE-STD-3009content. Maintenance of Training is Section 12.4.3 of the PDSA.	N/A	No corresponding chapter in DOE-STD-1189-2008 Format

Table 18-2 WSB PDSA Compliance with 3009 and 1189 Format and Content Requirements

DOE-STD-3009 (Section Layout)	WSB PDSA Compliance with DOE-STD-3009	WSB PDSA Compliance with DOE-STD-1189	DOE-STD-3009 and DOE-STD-1189 Differences
12.4.3 Modification of Training Materials	Complies with DOE-STD-3009content. Modification of Training Materials is Section 12.4.4 of the PDSA.	N/A	No corresponding chapter in DOE-STD-1189-2008 Format
Chapter 13 – Human Factors			
13.1 Introduction	Complies with DOE-STD-3009format and content	N/A	No corresponding chapter in DOE-STD-1189-2008 Format
13.2 Requirements	Complies with DOE-STD-3009format and content	N/A	No corresponding chapter in DOE-STD-1189-2008 Format
13.3 Human Factors Process	Complies with DOE-STD-3009format and content	N/A	No corresponding chapter in DOE-STD-1189-2008 Format
13.4 Identification of Human-Machine Interfaces	Complies with DOE-STD-3009format and content	N/A	No corresponding chapter in DOE-STD-1189-2008 Format
13.5 Optimization of Human-Machine Interfaces	PDSA section is entitled *Design Optimization of Human-Machine Interface*. Section will be developed during final design.	N/A	No corresponding chapter in DOE-STD-1189-2008 Format
Chapter 14 – Quality Assurance			
14.1 Introduction	Complies with DOE-STD-3009format and content	N/A	No corresponding chapter in DOE-STD-1189-2008 Format
14.2 Requirements	Complies with DOE-STD-3009format and content	N/A	No corresponding chapter in DOE-STD-1189-2008 Format
14.3 Quality Assurance Program and Organization	Complies with DOE-STD-3009format and content	N/A	No corresponding chapter in DOE-STD-1189-2008 Format
14.4 Quality Improvement	Complies with DOE-STD-3009format and content	N/A	No corresponding chapter in DOE-STD-1189-2008 Format
14.5 Documents and Records	Complies with DOE-STD-3009format and content	N/A	No corresponding chapter in DOE-STD-1189-2008 Format
14.6 Quality Assurance Performance	Complies with DOE-STD-3009content. PDSA section is entitled *Quality Assurance Program Performance.*	N/A	No corresponding chapter in DOE-STD-1189-2008 Format
14.6.1 Work Processes	Complies with DOE-STD-3009format and content	N/A	No corresponding chapter in DOE-STD-1189-2008 Format

Table 18-2 WSB PDSA Compliance with 3009 and 1189 Format and Content Requirements

DOE-STD-3009 (Section Layout)	WSB PDSA Compliance with DOE-STD-3009	WSB PDSA Compliance with DOE-STD-1189	DOE-STD-3009 and DOE-STD-1189 Differences
14.6.2 Design	Complies with DOE-STD-3009format and content	N/A	No corresponding chapter in DOE-STD-1189-2008 Format
14.6.3 Procurement	Complies with DOE-STD-3009format and content	N/A	No corresponding chapter in DOE-STD-1189-2008 Format
14.6.4 Inspection and Testing for Acceptance	Complies with DOE-STD-3009format and content	N/A	No corresponding chapter in DOE-STD-1189-2008 Format
14.6.5 Independent Assessment	Complies with DOE-STD-3009content. PDSA section is entitled *Assessment.*	N/A	No corresponding chapter in DOE-STD-1189-2008 Format
Chapter 15 – Emergency Preparedness Program			
15.1 Introduction	Complies with DOE-STD-3009format and content	N/A	No corresponding chapter in DOE-STD-1189-2008 Format
15.2 Requirements	Complies with DOE-STD-3009format and content	N/A	No corresponding chapter in DOE-STD-1189-2008 Format
15.3 Scope of Emergency Preparedness	Complies with DOE-STD-3009content. PDSA section is entitled *Scope of Emergency Preparedness Program.*	N/A	No corresponding chapter in DOE-STD-1189-2008 Format
15.4 Emergency Preparedness Planning	Complies with DOE-STD-3009format and content	N/A	No corresponding chapter in DOE-STD-1189-2008 Format
15.4.1 Emergency Response Organization	Complies with DOE-STD-3009format and content	N/A	No corresponding chapter in DOE-STD-1189-2008 Format
15.4.2 Assessment Actions	Complies with DOE-STD-3009format and content	N/A	No corresponding chapter in DOE-STD-1189-2008 Format
15.4.3 Notification	Complies with DOE-STD-3009format and content	N/A	No corresponding chapter in DOE-STD-1189-2008 Format
15.4.4 Emergency Facilities and Equipment	Complies with DOE-STD-3009format and content	N/A	No corresponding chapter in DOE-STD-1189-2008 Format
15.4.5 Protective Actions	Complies with DOE-STD-3009format and content	N/A	No corresponding chapter in DOE-STD-1189-2008 Format
15.4.6 Training and Exercises	Complies with DOE-STD-3009format and content	N/A	No corresponding chapter in DOE-STD-1189-2008 Format

Table 18-2 WSB PDSA Compliance with 3009 and 1189 Format and Content Requirements

DOE-STD-3009 (Section Layout)	WSB PDSA Compliance with DOE-STD-3009	WSB PDSA Compliance with DOE-STD-1189	DOE-STD-3009 and DOE-STD-1189 Differences
15.4.7 Recovery and Reentry	Complies with DOE-STD-3009format and content	N/A	No corresponding chapter in DOE-STD-1189-2008 Format
Chapter 16 – Provisions for D&D			
16.1 Introduction	Complies with DOE-STD-3009format and content	N/A	No corresponding chapter in DOE-STD-1189-2008 Format
16.2 Requirements	Complies with DOE-STD-3009format and content	N/A	No corresponding chapter in DOE-STD-1189-2008 Format
16.3 Description of Conceptual Plans	Complies with DOE-STD-3009content. PDSA section is entitled *Decontamination and Decommissioning*, and has subsections describing design features, operational considerations, and the conceptual D&D plan.	N/A	No corresponding chapter in DOE-STD-1189-2008 Format
Chapter 17 – Mgmt, Org., and Inst. Safety Provisions			
17.1 Introduction	Complies with DOE-STD-3009format and content	N/A	No corresponding chapter in DOE-STD-1189-2008 Format
17.2 Requirements	Complies with DOE-STD-3009format and content	N/A	No corresponding chapter in DOE-STD-1189-2008 Format
17.3 Org. Structure, Responsibilities, and Interfaces	Complies with DOE-STD-3009content. PDSA section is entitled *Organization, Function, Responsibilities, and Authorities*.	N/A	No corresponding chapter in DOE-STD-1189-2008 Format
17.3.1 Organizational Structure	Complies with DOE-STD-3009content. PDSA section is entitled *Washington Savannah River Company*, and summarizes the organization, including facility interfaces with site and DOE management.	N/A	No corresponding chapter in DOE-STD-1189-2008 Format

Table 18-2 WSB PDSA Compliance with 3009 and 1189 Format and Content Requirements

DOE-STD-3009 (Section Layout)	WSB PDSA Compliance with DOE-STD-3009	WSB PDSA Compliance with DOE-STD-1189	DOE-STD-3009 and DOE-STD-1189 Differences
17.3.2 Organizational Responsibilities	Complies with DOE-STD-3009content. PDSA section is entitled *WSB Organization, Functions, Responsibilities, and Authorities.*	N/A	No corresponding chapter in DOE-STD-1189-2008 Format
17.3.3 Staffing and Qualifications	Complies with DOE-STD-3009format and content	N/A	No corresponding chapter in DOE-STD-1189-2008 Format
17.4 Safety Management Policies and Programs	Complies with DOE-STD-3009format and content	N/A	No corresponding chapter in DOE-STD-1189-2008 Format
17.4.1 Safety Review and Performance Assessment	Complies with DOE-STD-3009format and content	N/A	No corresponding chapter in DOE-STD-1189-2008 Format
17.4.2 Configuration and Document Control	Complies with DOE-STD-3009format and content	N/A	No corresponding chapter in DOE-STD-1189-2008 Format
17.4.3 Occurrence Reporting	Complies with DOE-STD-3009format and content	N/A	No corresponding chapter in DOE-STD-1189-2008 Format
17.4.4 Safety Culture	Complies with DOE-STD-3009format and content	N/A	No corresponding chapter in DOE-STD-1189-2008 Format
	PDSA contains an additional Section 17.5, *Facility Records*	N/A	No corresponding chapter in DOE-STD-1189-2008 Format

Table 18-3 Compliance with Additional DOE-STD-1189 Recommendations

DOE-STD-1189 Recommendation[1]	WSB PDSA Compliance with DOE-STD-1189	Justification	Additional Work to be Completed
QA Program			
Update QA plan	Yes	The WSRC QA program is described in the QA Management Plan (Ref. 22), which was updated in January 2008 and is implemented through WSRC Procedure Manual 1Q.	None
Conduct QA assessments	Yes	Section 14.6.5 of the PDSA discusses the requirements to perform management, self, and independent assessments following the process outlined in WSRC Manuals 1Q, 1B, and 12Q.	Verify assessments have been performed
Fire Protection Program			
Design basis fire defined	Yes	Design basis fires and other DBAs are identified in Section 3.4.2 of the PDSA	None
Fire barrier design and fire areas finalized	Yes	The fire areas and fire barrier design safety features are described in the FHA and in Chapters 3 and 4 of the PDSA.	None
AHJ review of building layout	Yes	The AHJ has informally reviewed the building layout and the FHA. Documented approval of technical issue resolution has been received. Documented approval of the layout will be through approval of the CD-3 submittal	Submit and receive CD-3 approval.
FHA updated	Yes	Rev. D of the FHA (Ref. 23) was approved in April 2008.	None
Supports PDSA development	Yes	PDSA Chapter 11(Fire Protection) has been drafted	None
Criticality Safety Program			
Updated criticality safety design requirements	N/A	It has been determined that a criticality accident for the WSB is not credible as long as the waste acceptance criteria are met. Thus, a criticality Safety program is not applicable (PDSA Ch. 6). However, criticality incredibility is based in part on limiting the amount of fissile isotopes and	None
Updated preliminary CSEs	N/A		None
Criticality limits and controls re-assessed based on design and operating the process/facility	N/A		None

Table 18-3 Compliance with Additional DOE-STD-1189 Recommendations

DOE-STD-1189 Recommendation[1]	WSB PDSA Compliance with DOE-STD-1189	Justification	Additional Work to be Completed
CSE input to PDSA (HA and TSR derivation)	N/A	enrichment of uranium in the WSB. These requirements (WAC limits) are provided under the Inventory Control Program (Section 4.5.7 of the PDSA).	None
Radiological Protection Program			
ALARA considerations in design	Yes	Section 7.4 of the PDSA identifies elements of the SRS ALARA program (from the SRS ALARA Manual, WSRC-SCD-6) that will be applicable to WSB.	None
Contamination control	Yes	Section 7.3 of the PDSA outlines how radiation protection and control will be implemented in the WSB according to "lower tiered" WSRC procedure manuals 5Q1.1, 5Q1.2, 5Q1.3, 5Q1.4, 5Q1.5 and 5Q1.7.	None
Zoning	Yes	Section 2.6.3 of the PDSA states the HAW area is divided into primary and secondary confinement ventilation zones to prevent the potential spread of contamination. Section 7.10 of the PDSA states that normal operations radiation zone maps will be included in the final facility dose assessment report.	None
ALARA review	Yes	Section 7.4.1 of the PDSA states that program audits and design reviews are ALARA considerations.	None

Table 18-3 Compliance with Additional DOE-STD-1189 Recommendations

DOE-STD-1189 Recommendation[1]	WSB PDSA Compliance with DOE-STD-1189	Justification	Additional Work to be Completed
Final Shielding Analysis (Facility layout and material location/quantity)	Yes	Section 7.4.1 of the PDSA describes how permanent shielding has been included in the WSB facility design. Preliminary calculations have been performed to determine the potential exposures of workers to radiation associated with pipes, tanks, sample vials, and the cement waste forms produced in both the High Activity Waste (HAW) and Low Activity Waste (LAW) processes. The facility design will utilize these results in shielding considerations for the WSB. The final dose assessment for the WSB will detail the shielding requirements and the potential effective radiation exposures to facility workers.	None
Monitoring (area and personnel)	Yes	Section 7.4.1 of the PDSA describes how the WSB will implement the SRS radioactive material sampling and monitoring program.	None
Human Factors Program			
HF Engineering Plan	Yes	Chapter 13 of the PDSA describes the impact of human factors on the WSB. Section 13.4 describes where significant human-machine interfaces are in the various WSB system groups. Section 13.4 also specifies further human factors engineering input that must be provided in the detailed design engineering phase of the facility to ensure that applicable design requirements are fulfilled.	None
HF Review	Yes	A human factors review of the preliminary safety-related SSCs was performed to develop Chapter 13 of the PDSA. This review identified the human-machine interface requirements that will be important in the design of these SSCs.	None
Security Program			

Table 18-3 Compliance with Additional DOE-STD-1189 Recommendations

DOE-STD-1189 Recommendation[1]	WSB PDSA Compliance with DOE-STD-1189	Justification	Additional Work to be Completed
Safeguards Requirements Identification complete	Yes	G-SYD-F-00023, Waste Solidification Building System Design Description for Balance of Plant Support System – Safeguards and Security (Ref. 24)	None
Design review	Yes	NNP-WSB-2007-00030 (Ref. 25) documents a 50% design review and U-DRR-F-00002 (Ref. 26) documents the design complete formal design review.	None
Environmental Protection Program			
Final NEPA documents	Yes	References 27 and 28 indicate that the WSB environmental impacts have been addressed in various existing EIS documents by both the DOE and NRC and that no further NEPA documentation is required.	None
Hazardous Materials Program			
Toxicological Material HA	Yes	This is covered Chapter 8 of the PDSA and by Appendix E of the CHAP Report (Ref. 21)	None
Contamination control	Yes. While not addressed in a specific section, PDSA chapter 7 discusses Radiation Protection., Chapter 8 Hazardous Material, Chapter 9 Radioactive and Hazard Waste Management, etc. These refer to compliance with site programs, S/RIDS and hence tie to DOE Order compliance.	In addition to the PDSA, A-AD-F-2520, -2521, -2522, -2523, and -2524 (Refs. 29-33) include Radiological and Contamination zone floor plans.	None
Inventories refined	Yes	This is included in Appendix E of the CHAP Report (Ref. 21)	None
Codes and Standards defined	Yes	Applicable codes and standards are defined in Sections 8.2, 8.3, 8.4 and 8.11, and also by reference to the S/RID.	None

Table 18-3 Compliance with Additional DOE-STD-1189 Recommendations

DOE-STD-1189 Recommendation[1]	WSB PDSA Compliance with DOE-STD-1189	Justification	Additional Work to be Completed
Zoning	Yes (Not mentioned in Appendix I.2 - *PSDR/PDSA Format and Content Guide*)	The FHA, F-FHA-F-00033, documents the occupancy classification of different portions of the WSB per the International Building Code use designations. The portions of the facility that process significant quantities of hazardous material are designated as H-4 (Health Hazard) while the rest of the facility is designated as F-2 (Low Hazard Industrial). These designations support identification of fire zones, egress path requirements for life safety code, etc. for the facility. In addition, hazardous chemical evaluations were performed and are documented in the Chemical Hazard evaluation included as Appendix A to the CHAP. This evaluation determined that the chemical facility hazard category for the WSB was "Low Hazard Chemical". Based on the relative hazard of the chemicals used in the WSB and the intimate contact between the chemicals used and the radiological material, the zoning of the facilities for radiological hazards is sufficient to address all chemical hazards as well.	None
ALARA reviews	Yes	Section 8.7.3.2, *Hazard Prevention and Control Measures,* states that the area industrial hygienist will review work practices, maintenance records, and historical employee exposure records and, based on the results of these reviews, will transmit any recommendations to the responsible facility manager for minimizing or eliminating employee occupational exposures.	None

Table 18-3 Compliance with Additional DOE-STD-1189 Recommendations

DOE-STD-1189 Recommendation[1]	WSB PDSA Compliance with DOE-STD-1189	Justification	Additional Work to be Completed
Codes and Standards Implementation	Yes	Section X.2 for each chapter of the PDSA contains requirements. In addition compliance with DOE orders through site procedures is indicated in S/RIDS (Ref. 34). Input to the design is provided through the FDD and SDD documents. Design reviews are performed to indicate design output matches design input.	None
Monitoring (area and personnel) requirements	Yes	Section 8.7 of the PDSA discusses hazardous material monitoring requirements for the workplace and outside the facility	None
Radiological and Hazardous Waste Management Program			
Identify major waste streams	Yes	Sections 9.1.2 and 9.4.2 of the PDSA identify the major waste streams at WSB	None
Fundamental approach defined	Yes	The overall waste management process is discussed in Sections 9.3 and 9.4	None
Develop waste handling designs	Yes	The WSB is designed with the primary function of handling waste (or transferring waste to another waste-handling facility)	None
Emergency Preparedness Program			
Update emergency preparedness hazard survey and screen	Yes	The *Preliminary Hazards Survey for the WSB*, S-EHS-F-00002, was updated in January 2008	None
Coordinate hazard evaluations	No	Hazard evaluations have been done for the safety analysis documentation, but not strictly for the Emergency Preparedness Program	Prepare preliminary EPHA
Update EPHA	No	No EPHA has been prepared for the WSB	Prepare EPHA
External Reviews			
DNFSB	Yes	Numerous phone calls and site visits. Ventilation system review on August, 2007, general project review April 2008, etc.	There will be continuing involvement of the DNFSB with the project.
PDSA Review	Yes	WSRC review of the PDSA has been done	None

Table 18-3 Compliance with Additional DOE-STD-1189 Recommendations

DOE-STD-1189 Recommendation[1]	WSB PDSA Compliance with DOE-STD-1189	Justification	Additional Work to be Completed
Project Review	Yes	CD-2 review was completed in 2003 then the project placed on hold. Since then NNP-WSB-2007-00030 documents a 50% design review and U-DRR-F-00002 documents a design complete formal design review. CD-3 review and approval is scheduled for late 2008.	None
System Engineer Program			
Define systems requiring SE	Yes	Reference 35 provides definition of the role of the System Engineers and designates specific System Engineers to each system that requires them. There is no mention of a System Engineer Program in the PDSA. Although, numerous design/system engineers have participated on the CHAP team and reviewed the PDSA.	None
Identify SEs	Yes		None
SEs participate in final design	Yes		None
Procedures, Training and Qualification			
Identify training and qualification needs	Yes	Section 12.4 of the PDSA discusses the WSB training program.	None
Develop draft operating and maintenance procedures	No	Reference 6 provides a strategy for development of operating and maintenance procedures.	Develop procedures during Title 3 design
Define operator qualification requirements	Yes	Reference 6 provides a basic list of operator qualification requirements.	Develop operator qualification requirements during Title 3 design

1) These are typical activities associated with Safety Management Programs [from Table 7-1 of DOE-STD-1189-2008], which are required to be addressed in Chapters 6 through 17 of the DSA. Any aspects important to design should be considered and integrated into the design effort as early as practical and at least by completion of the detailed design.

Table 18-4 Comparison of WSB Safety Related Components to ANS 2.26 and ASCE 43-05 requirements

	WSB SSC Type and Function		ANS 2.26 Definition of Limit State C		ASCE 43-05 Requirements for Limit State C		WSB		Conclusion
	SSC Type	Function	SSC Type	Limit State C Function	Recommended Code	Code Criteria Modifiers	Design Code	Code Modifiers	Meets/ Exceeds DOE 1189 Criteria
1	Waste Solidification Building	Position retention	Building Structures	Retains nearly full stiffness and retains full strength. The components it supports will perform normal and safety functions during and following an earthquake.	ACI 349	Fu = 2, Allowable Drift < 0.004”	ACI 349	Fμ (demand reduction factor) not used. Actual drift = 0.0001” max.	Exceeds (on drift limits meets Limit State D)
2	Tanks and vessels	Pressure boundary integrity	Vessels for containing hazardous materials	Applicable to low-pressure vessels and tanks with contents sufficiently hazardous that release may injure workers. Damage will be sufficiently minor to usually not require repair.	ASME VIII, Div. 2	Fμ = 1.15	ASME VIII, Div 2	Fμ not used.	Meets

Table 18-4 Comparison of WSB Safety Related Components to ANS 2.26 and ASCE 43-05 requirements

	WSB SSC Type and Function		ANS 2.26 Definition of Limit State C		ASCE 43-05 Requirements for Limit State C		WSB		Conclusion
3	Ducts	Pressure boundary integrity	Confinement barriers and systems containing hazardous material (gloveboxes, ducts, etc.)	Barriers could be designed to this Limit State if exhaust equipment is capable of maintaining negative pressure with few small cracks in barriers.	SMACNA	Fμ =1.15	DOE EH - 0545 & SMACNA	Stress limited to less than yield strength, Fμ not used. Fully elastic design	Exceeds

Table 18-4 Comparison of WSB Safety Related Components to ANS 2.26 and ASCE 43-05 requirements

	WSB SSC Type and Function		ANS 2.26 Definition of Limit State C		ASCE 43-05 Requirements for Limit State C		WSB		Conclusion
4	Pipe/tubing supports, conduit and cable tray support, HVAC duct supports including anchors and anchor bolts	Position retention	Equipment support structures	Retains nearly full stiffness and full strength. Passive SSC supports will perform normal and safety functions during and after specified seismic loads. Anchorages may undergo very limited permanent distortion without impairing the normal and safety functions of the supported SSCs.	AISC/LRFD AISC/N690 AISC/ASD scaled to LRFD	Fμ =1.25	Supports: AISC/ASD Anchorages: Ductile anchors per ACI 318 Appendix D	Stress limited to less than yield strength, Fμ not used. Fully elastic design	Exceeds

Table 18-4 Comparison of WSB Safety Related Components to ANS 2.26 and ASCE 43-05 requirements

	WSB SSC Type and Function		ANS 2.26 Definition of Limit State C		ASCE 43-05 Requirements for Limit State C		WSB		Conclusion
5	Pumps, valves, dampers, MCC, motors, instruments and controls	Active function/Pressure boundary (pumps, valves, dampers)	Mechanical or electrical SSC	Must remain anchored. If pressure retaining must remain leak tightness. May undergo very limited permanent deformation yet perform its normal and safety functions after exposure to specified seismic loads.	Pumps: API 610 Valves: ASME III, Cl. 3 Dampers: SMACNA Electrical and I & C components: test to IEEE 344	Fμ =1.15	Pumps: API 610 or equivalent Valves: B31.16 as modified by SRS Eng. Std. 15060 to be equivalent to ASME III/ND Dampers: SMACNA & DOE EH-0545 Electrical and I & C components: tested to IEEE 344	Fμ not used.	Meets
6	Filters	Pressure boundary/integrity of filter media	High-efficiency particulate absorber filter assemblies and housing	This Limit State may be expected to be applied to systems categorized as SDC-4 or lower.	Mfr. Spec.	Fμ =1.25	SMACNA & DOE EH-0545	Stress limited to less than yield strength, Fμ not used. Fully elastic design.	Exceeds

Table 18-4 Comparison of WSB Safety Related Components to ANS 2.26 and ASCE 43-05 requirements

	WSB SSC Type and Function		ANS 2.26 Definition of Limit State C		ASCE 43-05 Requirements for Limit State C		WSB		Conclusion
7	Conduit/cable trays	Position retention	Electrical Raceways	Cable connections are rigid or brittle or are such that the raceways may undergo only very limited distortion, displacement or loss of stiffness during exposure to specified seismic loads before cable functions are impaired.	Mfr. Spec.	Fμ =1.25	AISC/ASD	Stress limited to less than yield strength, Fμ not used. Fully elastic design.	Meets

Table 18-4 Comparison of WSB Safety Related Components to ANS 2.26 and ASCE 43-05 requirements

	WSB SSC Type and Function		ANS 2.26 Definition of Limit State C		ASCE 43-05 Requirements for Limit State C		WSB		Conclusion
8	Piping	Pressure boundary integrity	Pressure vessels and piping	Tanks, pressure vessels and piping systems that may have no significant spills or leakage during and following an earthquake. Includes vessels and piping that have confinement as a safety function.	ASME III, Subsection ND	Fμ =1 to 1.25	ASME B31.3	B31.3 is modified by SRS Eng. Std. 15060 to be equivalent to ASME III, ND Fμ not used.	Meets

Appendix A

Comparison of horizontal DBE ground motion for Seismic Design Categories (SDC)* 3, 4, and 5 for SRS per ASCE 43-05 with NUREG 1.60 Spectra anchored to 0.2g.

The procedure for determining the horizontal design response spectra is summarized below (ASCE 43, Section 2.3):

1) Convolve the uniform hazard response spectra (UHRS) at the hazard mean annual exceedance probability, H_D, at depth to obtain the corresponding UHRS at H_D at the ground surface (or other location in the soil column using site-specific soil properties.
2) Convolve the UHRS at $0.1H_D$ at depth to obtain the corresponding UHRS at $0.1H_D$ at the surface (or other location).
3) Determine the slope factor, A_R, from the ratio of $UHRS_{0.1H_D}/UHRSH_{H_D}$, at the ground surface, computed over the spectral frequency range, frequency by frequency, using $A_R = SA_{0.1H_D} / SA_{H_D}$
3) Use the following equations to develop the Design Factor, DF, at each spectral frequency, at the ground surface.

$$DF = \max(DF_1, DF_2)$$
$$DF_2 = 0.6(A_R)^{\alpha}$$

4) Modify the $UHRS_{H_D}$, at the surface with DF to obtain the DRS at the ground surface.

The factors H_D, DF_1, and α are defined for each SDC in the table below:

TABLE 2-1. Design Response Spectrum Parameters

SDC	H_D	P_F	R_P	DF_1	α
3	4×10^{-4}	$\sim 1 \times 10^{-4}$	4	0.8	0.40
4	4×10^{-4}	$\sim 4 \times 10^{-5}$	10	1.0	0.80
5	1×10^{-4}	$\sim 1 \times 10^{-5}$	10	1.0	0.80

$$R_P = \frac{\text{Mean Annual Hazard Exceedance Frequency}}{} = \frac{H_D}{P_F}$$

As seen from the table above, for SDC 3 and 4 the UHRS is equal to a return period of 2,500 years (1/4e-4). This is equivalent to PC-3 spectra per DOE-STD-1020. For SDC 5, the UHRS spectrum is equal to a return period of 10,000 years (1/1e-4) which is the same as a PC-4 spectrum per DOE-STD-1020. At SRS the PC-3 and PC-4 response spectra have been determined by the site geotech group and are documented in the SRS Structural Design Criteria (01060, Rev 8). It is noted that the PC-3 spectra was developed based on a 2,000 year return period and per 01060 a 1.2 factor is to be applied for design of all new facilities. It is assumed the use of this factor approximates a 2500 yr return period.

For the purposes of this comparison study, it is assumed that DF_1 will control over DF_2. Preliminary calculations of DF_2 using the estimated slope of the hazard curve, A_R, indicate that DF_1 will be larger or only slightly less than DF_2 at all frequencies. Horizontal design response spectra for SDC 3, 4, and 5 are therefore calculated from the SRS PC-3 and PC-4 spectra as follows:

SDC 3: (0.8)(1.2)(PC-3)

SDC 4: (1.0)(1.2)(PC-3)

SDC 5: (1.0)(PC-4)

The SDC 3, 4, and 5 spectra are plotted with the NUREG 1.60 spectra in Figure 1 below.

[*] Note: In ASCE 43 the term "Seismic Design Category" has a different meaning than in ASCE-7 and the IBC

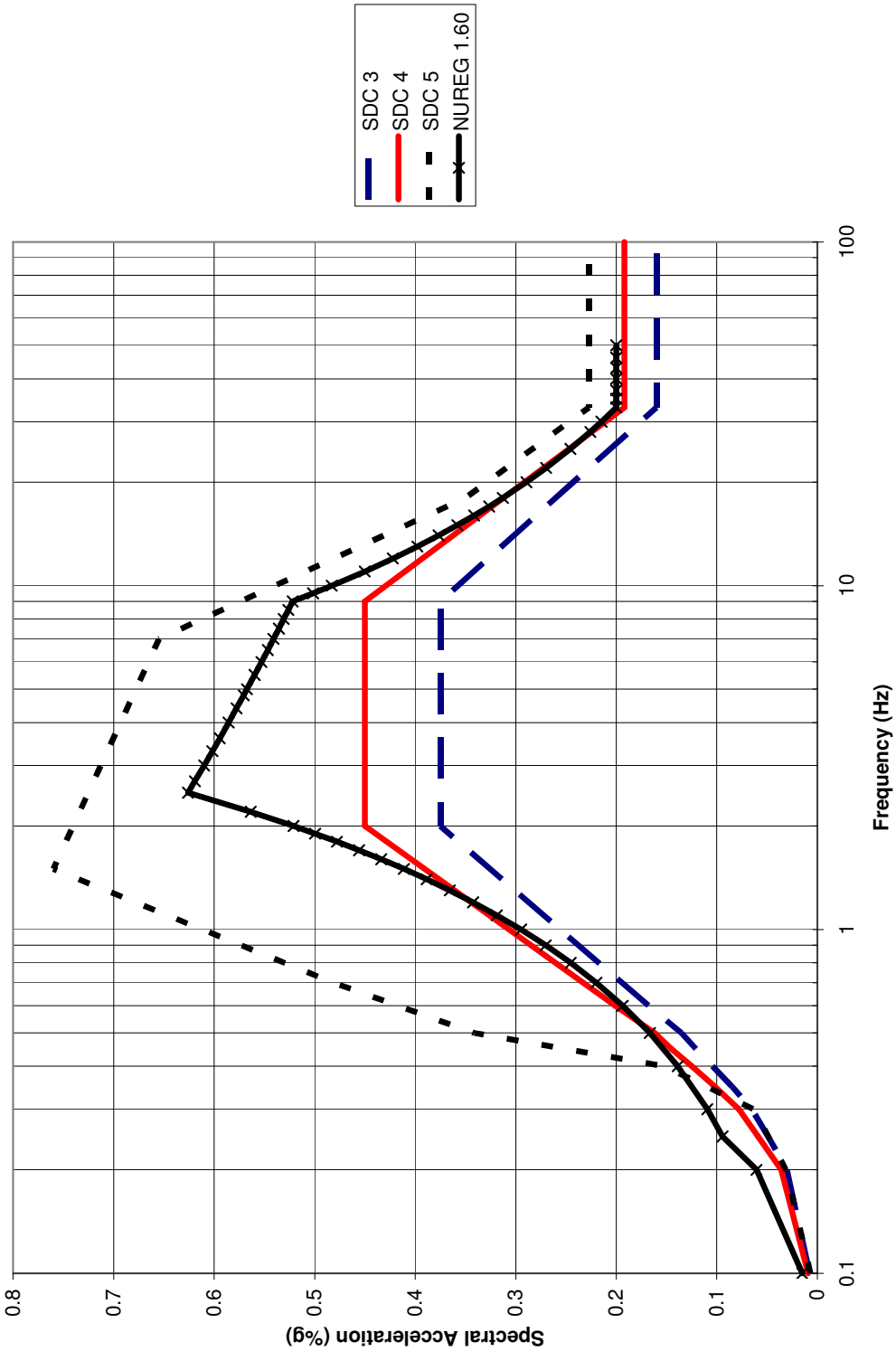
SDC 3
SDC 4
SDC 5
NUREG 1.60
Spectral Acceleration (%g)
0.8
0.7
0.6
0.5
0.4
0.3
0.2
0.1
0
0.1
1
10
100
Frequency (Hz)