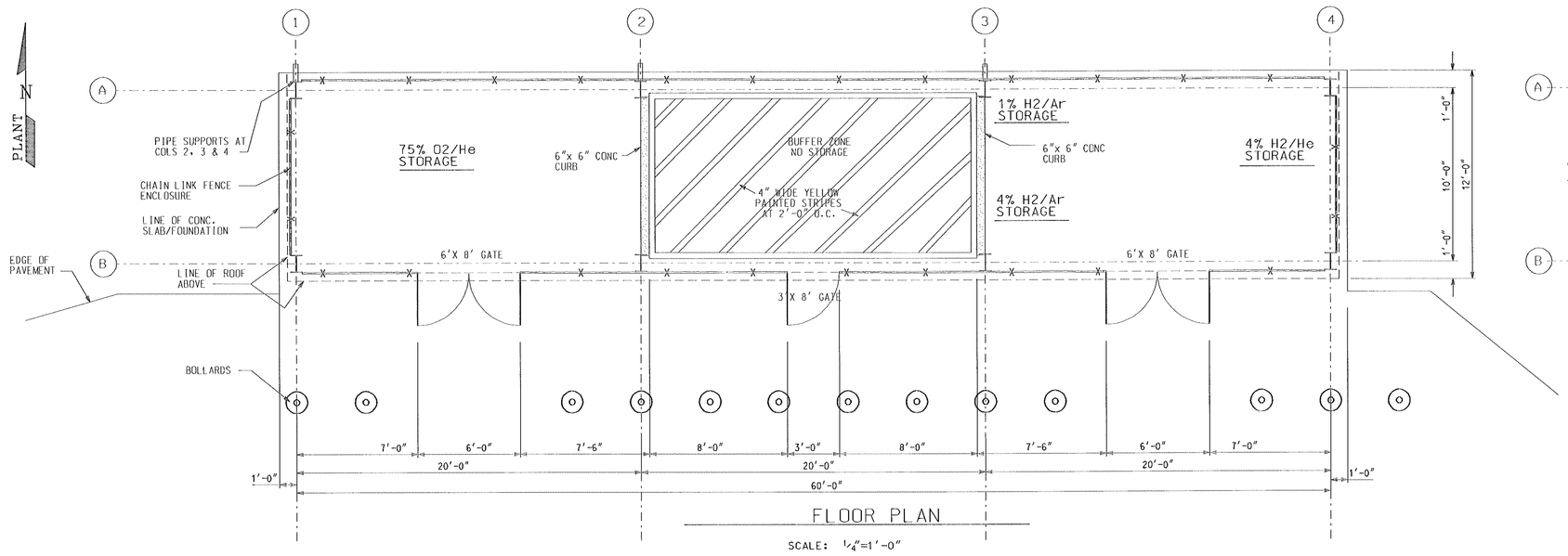


FLOOR PLAN

SCALE: 1/4"=1'-0"

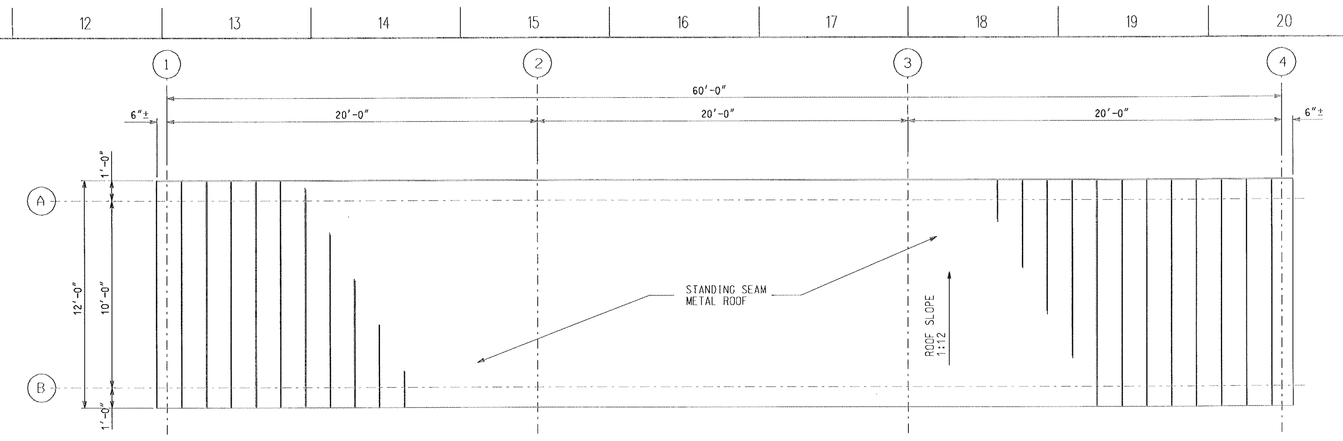


ROOF PLAN

SCALE: 1/4"=1'-0"

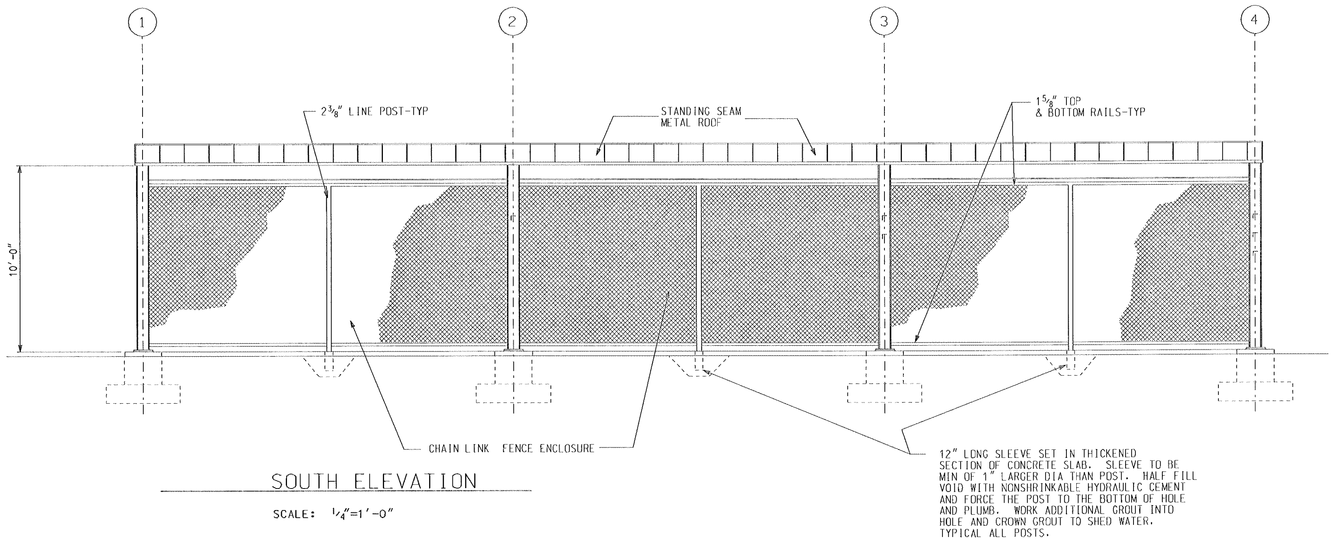


SOUTH ELEVATION

SCALE: 1/4"=1'-0"

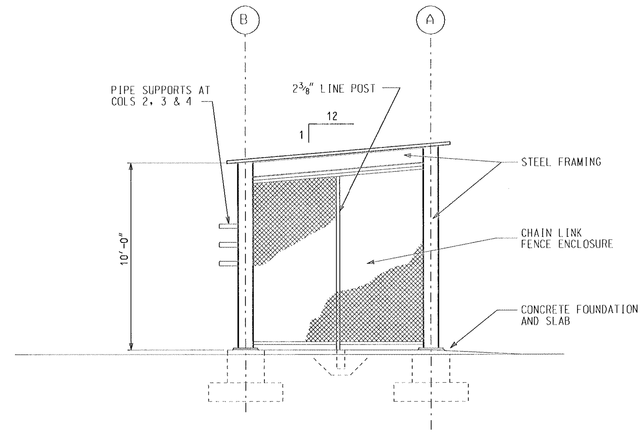


WEST ELEVATION

SCALE: 1/4"=1'-0"

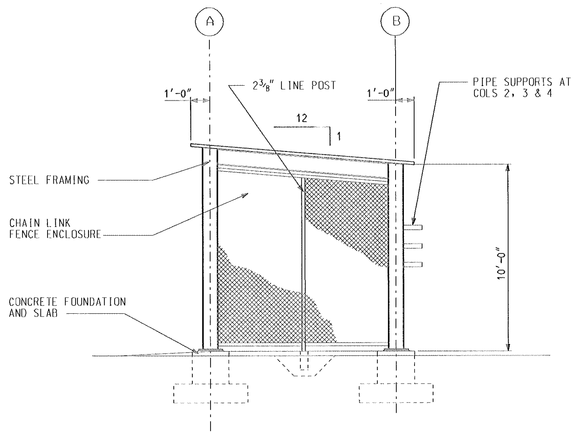


EAST ELEVATION

SCALE: 1/4"=1'-0"

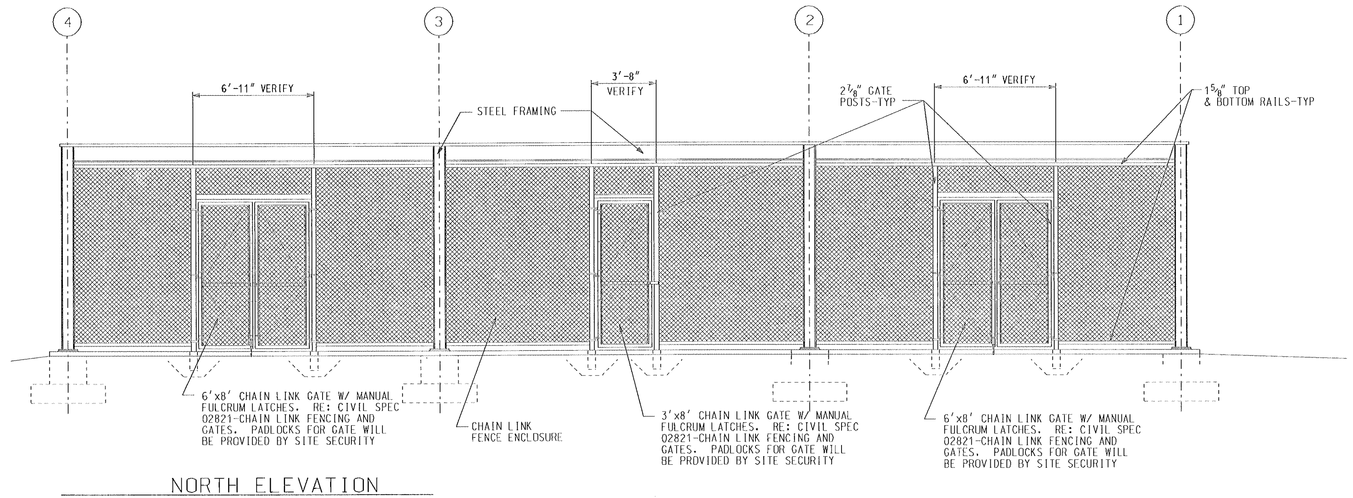


NORTH ELEVATION

SCALE: 1/4"=1'-0"

Unclassified/Non-UCNI

Reviewing Official: J. Clemmer / PNL (Name/Organization)

Date: 7/19/2010

PROFESSIONAL SEAL

0 1' 2' 3' 4' 5' 10' 15'

6"

SCALE: 1/4"=1'-0"

WHEN PRINTED ON AN "E" SIZE SHEET

| | |
|---|---|
| URS PROJECT NO. | 21124 |
| SAVANNAH RIVER SITE PROJECT NO. | W630 |
| LATEST REVISION | A |

URS

1800 E. UNION AVE., SUITE 100
DENVER, CO 80237
(303) 843-2000

UNITED STATES DEPARTMENT OF ENERGY

SAVANNAH RIVER SITE

| BLDG. NO. | SITE CLEARANCE NO. | DESIGN AREA NO. | DESIGN GROUP |
|---|---|---|---|
| | | N/A | URS |

TITLE

# PIT DISASSEMBLY & CONVERSION

# GAS STORAGE AREA

# PLANS AND ELEVATIONS

| SCALE | SRS DRAWING NO. | SHEET NO. | LATEST REVISION |
|---|---|---|---|
| AS NOTED | SK-PDC-18-013 | 1 OF 1 | A |

THIS DRAWING HAS BEEN FURNISHED BY THE SAVANNAH RIVER SITE. THE INFORMATION AND KNOW HOW THEREON MAY NOT BE USED NOR THE DRAWING REPRODUCED WITHOUT WRITTEN PERMISSION OF THE PRIME CONTRACTOR. ALL REPRODUCTIONS IN WHOLE OR IN PART, INCLUDING VENDOR'S SHOP DRAWINGS, SHALL BEAR OR REFER TO THIS STAMP.

REFERENCE DRAWINGS

REFERENCE STANDARDS

| REVISION APPROVAL RECORD | | | | | |
|---|---|---|---|---|---|
| DISCIPLINE | REVIEWED | DATE | DISCIPLINE | REVIEWED | DATE |
| CIVIL | | | PIPING | | |
| STRUCTURAL | | | ELECTRICAL | | |
| HVAC/PLUMBING | | | ARCHITECTURAL | | |
| MECHANICAL | | | INST & CONTROL | | |
| PROCESS | | | ES & H | | |
| CRITICALITY | | | SYSTEMS ENG. | | |
| Pu TECHNOLOGY | | | CONSTRUCTION | | |
| SAFEGUARDS | | | QUALITY ASSURANCE | | |
| FIRE PROTECTION | | | GLOVEBOX | | |

| DRAWING RECORD | | |
|---|---|---|
| DESIGNER | AMC | 05-27-10 |
| CHECKER | | |
| CADD FILE DATA | | |
| TYPE: MICROSTATION VERS: J | | |
| NODE: | | |
| PATH: P:\CAD\ARCH\SKETCHES\ | | |
| FILE: SKPDC-13-1.DGN | | |
| UPDATED: BY: | | |

| PROJ. | REV. NO. | DATE | REVISION | PRP'D | LEAD ENG | CHK'D | APRV'D FDM | APRV'D | APRV'D | PROJ. | REV. NO. | DATE | REVISION | PRP'D | LEAD ENG | CHK'D | APRV'D FDM | APRV'D | APRV'D |
|---|---|---|---|---|---|---|---|---|---|---|---|---|---|---|---|---|---|---|---|
| 21124 | A | 07-14-10 | ISSUED FOR CONCEPTUAL DESIGN | | AMC Test DAY | | | | | | | 7-19-10 | | | | | | | |

INCHES 1 2 3 CENTIMETERS 1 2 3 4 5 6 7 8

$$$$$$$$$$$$$$$$$$$$$$FILEPATH$$$$$$$$$$$$$$$$$$$$$$
$$DATE$$_$TIME$$$

WS.* ( ) . REF FILES YES NO

LEVELS 1111111111222222222333333333444444444555555555666666 1234567890123456789012345678901234567890123456789012345678901234567890123

PSC- PLOT DATE DRAWN BY (ORIG) TIME LAST CADD REV. BY: DATE: